SCALE - Structural CALculations Ensemble

The output from SCALE is a set of pages, neatly titled, dated and numbered, containing calculations and component details made to a standard suitable for submission to a checking authority.

Sample output calculations, detailing drawings, analysis runs and plots of results for nearly 4000 runs of SCALE, LUCID, SPADE and NL-STRESS, are included in this document. To jump directly to these calculations click on the bookmarked links which should be displayed to the left of this document, or click on the highlighted proformas below to jump directly to sample output from that proforma.

Where a SCALE proforma has a # sign following its number, this indicates that that proforma pulls forward the moments, shears etc. from an NL-STRESS analysis into the proforma.

All proformas allow full workings to the Eurocodes and full workings to the British Standard, or are analytical and applicable to both. There are now over 600 proformas ready for the Eurocodes.

SCALE - Mathematics and Miscellaneous

sc020 Pages with heading only
sc021 Invoice for structural work
sc022 First page of calculations
sc027 Solution of triangles
sc028 Solution of simultaneous equations
sc029 Solution of quadratic, cubic & quartic equations
sc030 Coordinate geometry
sc031 Differentiation of standard forms
sc032 Differentiation of a general function
sc033 Integration of standard forms
sc034 Integration of a general function
sc035 Mensuration of plane areas and solids
sc036 Statistics and quality control
sc037 Latent roots
sc038 Centre of gravity
sc039 Matrix inversion
sc042 Verifying the correctness of SCALE proformas & NL-STRESS models
sc044 For testing only, automated running of all examples
sc048 Description of every SCALE/LUCID/SPADE/NL-STRESS proforma
sc050 Greek alphabet and SCALE character set
sc051 Conversion between Imperial and metric and vice versa
sc052 Compound interest for mortgage and loan payments
sc053 Expressing a set of data points as a polynomial
sc055 Cross referencing of numerical variables in proforma files
sc070 Simple test example

SCALE - Reinforced Concrete Design to Eurocode 2 and BS8110

sc072 Rectangular beam - flexure only
sc073 Rectangular beam - flexure, span/depth, curtailment, laps
sc074 Tee beam - flexure only
sc075 Tee beam - flexure, span/depth check
sc076 Design of walls
sc077 Wall to wall intersection
sc078 Rectangular and Tee beam - shear only
sc080 Solid slab - flexure, tension steel only, span/d /m width
sc081 Solid slab - flexure, tension & comp steel, span/d /m width
sc082 Solid slab - flexure, tens & comp steel, span/d given width
sc083 Solid slab - shear only
sc084 Slab rib - shear only
sc085 Two way slabs - moments only
sc086 Two way slabs - with design
sc087 Flat slabs - simplified method
sc088 Slabs - punching shear
sc089 Annular column
sc090 Stocky column - biaxial bending
sc091 Slender rectangular column - uniaxial bending
sc092 Slender rectangular column - biaxial bending
sc094 Circular column - design for ultimate
sc095 Circular column - cracking
sc096 Circular column - cracking with tension stiffening
sc097 Rectangular column uniaxial bending - rigorous procedure
sc098 Rectangular column biaxial bending - rigorous procedure
sc099 Circular column in accordance with IStructE/ICE manual
sc100 Simply supported rectangular beam/slab with general loading
sc101 RC beam on elastic piles subj. to train of moving point loads
sc102# Rectangular beam/slab section
sc103 Rectangular beam/slab section - checking aid
sc104# Biaxially bent stocky column
sc105 Rectangular column section - checking aid
sc106# Flanged beam section design to IStructE manual
sc107# Flanged beam section design to Clause 3.4.4.4
sc108 Torsion steel for rectangular section
sc109 Ground-supported concrete slabs for industrial buildings
sc110 Pad footing with uniaxial bending, including section design
sc111 Deep beams - Kong's method
sc112 Modular-ratio design of reinforcement for circular column
sc113 Modular-ratio calculation of stresses for circular column
sc117 Simply supported R.C. staircase
sc118 Concrete nibs
sc119 Fire resistance

SCALE - Reinforced & Prestressed Concrete Design: Eurocode 2/BS5400/DOT

sc122 General reinforced concrete section - design
sc123 General reinforced concrete section - assessment
sc124 Early thermal cracking
sc125 Half joint
sc126 Torsion in reinforced concrete - design
sc127 Torsion in reinforced concrete - assessment
sc128 Temperature effects

sc130 HA loading to BD 37/01
sc131 HA loading assessment to CS 454
sc132 ULS flexure in prestressed members - design
sc133 ULS flexure in prestressed members - assessment
sc134 ULS shear in prestressed members - design
sc135 ULS shear in prestressed members - assessment
sc114 TY beam with in-situ infill
sc115 TY beam with in-situ top slab
sc116 TYE beam with in-situ top slab
sc165 TYE beam with in-situ infill
sc138 SY beams with insitu top slab
sc139 YE beams with insitu top slab
sc140 Inverted T beam
sc141 M beam
sc142 UM beam
sc143 Y beam
sc144 U beam
sc145 Wide box beam
sc146 Box beam
sc148 General precast prestressed bridge beam
sc149 Concrete mix design
sc151 Rectangular column - section interaction - design
sc152 Rectangular column - section interaction - assessment
sc153 Circular column - section interaction - design
sc154 Circular column - section interaction - assessment
sc155 General column - section interaction - design
sc156 General column - section interaction - assessment
sc157 Rectangular column - biaxial bending - design
sc158 Rectangular column - biaxial bending - assessment

SCALE - Reinforced Concrete to Eurocode 2/BS8007/BS8666/Section Analysis

sc160 Wall/slab section
sc162 Beam section
sc164 Two way spanning wall slab/plate with hydrostatic pressure
sc189 Concrete specification to BS8500-1 and BS8500-2
sc190 Bar scheduling to BS8666:2005
sc191 (Withdrawn) Bar scheduling to BS4466
sc192 Properties of transformed sections
sc193 Biaxial bending of rectangular section
sc194 Biaxial bending of circular section
sc195 Biaxial bending of user defined section

SCALE - Composite Construction to Eurocode 4, BS5950 and BS5400

sc210 Internal beam with UDL to BS5950 and EC4
sc212 Edge beam with UDL to BS5950 and EC4
sc214 Internal beam with secondary beams to BS5950 and EC4
sc216 Edge beam with secondary beam to BS5950 and EC4
sc218 Internal beam with secondary beams at 1/3 pts to BS5950 & EC4
sc220 Edge beam with secondary beams at third points to BS5950 & EC4
sc221 Lateral restraint from steel decking (construction phase) EC4
sc222 Section properties to BS5950 and EC4
sc224 Shear connector design to BS5950 and EC4
sc225 Temperature effects in composite bridge decks - BS5400 & D.Tp.

sc226 Differential shrinkage in composite bridge decks - BS5400 & D.Tp.

SCALE - Timber Design to Eurocode 5 and BS5268

sc250# Rectangular section with axial load & bending
sc251# Rectangular Glulam column/tie with axial load
sc252 Domestic floor joist
sc253 Biaxial bending of timber section
sc254 Simply supported beam with general loading
sc255 Simply supported Glulam beam with general loading
sc256 Simply supported flitched beam with general loading
sc257 Spaced timber column
sc258 Ply web and box beam
sc259 Stressed skin timber floor joist
sc260 Howe truss
sc262 Pratt truss
sc266 Fink truss
sc267 Racking resistance of timber stud panels
sc268 Fire design of timber beam
sc269 Residential floor vibration check to EC5
sc271 Nailed joint
sc272 Screwed joint
sc273 Bolted joint
sc274 Spliced timber joint
sc275 Toothed plate connector
sc280 Rafter or sloping beam
sc284 Couple roof
sc286 Collar-tie roof
sc288 Lean-to roof
sc290 Trussed beam
sc292 Braced sheds (for attic and other frames, see NL-STRESS below)

SCALE - Steel Design to Eurocode 3 and BS5400/DOT

sc356 List of proformas
sc357 Design objectives and partial safety factors
sc358 Steel grades to BS EN 10 025 & BS4360
sc359 Nominal yield stress
sc360 Notch toughness
sc361 Stress analysis; allowance for shear lag
sc362 Shape limitations for flanges
sc363 Openings in webs and compression flanges
sc364 Shape limitations for flat stiffeners
sc365 Shape limitations for bulb flat stiffeners
sc366 Shape limitations for angle stiffeners
sc367 Shape limitations for tee stiffeners
sc368 Shape limitations for closed stiffeners
sc369 Shape limitations for flanges curved in elevation
sc370 Shape limitations for circular hollow sections
sc371 Effective section
sc372 Evaluation of stresses
sc373 Effective length for lateral torsional buckling
sc374 Slenderness, moment and shear resistance
sc381 Bearing stiffeners at end support
sc382 Transverse web stiffeners other than at supports

SCALE - Steel Design to Eurocode 3 and BS5950-1:2000

sc339 Structural robustness of steel framed buildings
sc340 Bolts
sc350 Steel guardrailing
sc351 Balluster base plate - either concentric or not with baseplate
sc355 Steel runway beam
sc384 Stainless steel circular hollow section design
sc385 Stainless steel hollow section design
sc386 Simply supported stainless steel beam (CHS, SHS, RHS, Channel)
sc387 Axially loaded stainless steel column (CHS, SHS, RHS, Channel)
sc388 Axially loaded stainless steel angle
sc390# Concrete filled square and rectangular hollow section column
sc391# Concrete filled circular hollow section column
sc392 Fire design of concrete filled structural hollow section column
sc396 Moment connection between RHS column and column base
sc407 Simple design, builder's arithmetic, general check, safe loads
sc408 SS beam (UB, UC, Joist, or Channel) general loading
sc409 UB, UC or RSJ with bottom flange plate
sc410# I beam section design
sc411# Portal frame rafter design
sc412# RHS beam section design
sc414# CHS beam and column section design
sc415 Checking aid for Universal Beams
sc416 Design of RHS Slimflor edge beam
sc418 Slim floor design
sc419 Slim floor design using deep decking
sc421 Base plate subject to load and moment
sc422 Extended bolted end plate connection beam to column
sc423 Flush bolted end plate connection beam to column
sc424 Beam splice - Extended end plate connection
sc425 Beam splice - Flush end plate connection
sc426 Welded beam to column connection
sc427 Flush beam splice with end plates and single flange plate
sc428 Cantilevered beam
sc429# Cantilevered beam - alternative linking with NL-STRESS
sc431 Beam (UB, UC or Channel) with biaxial bending
sc432 Fully restrained SS I beam with UDL and point load/s
sc434 SS I Beam with UDL - restrained at ends only
sc436 SS I Beam with UDL & point loads restrained or unrestrained
sc437 SHS/RHS/CHS beam restrained at ends and loads
sc438 Purlin on sloping roof
sc439 Side rail
sc440# Column (UB, UC or Channel) with biaxial bending
sc441# Cased I section column
sc442# H Section column with biaxial bending
sc443 Effective length of compression members
sc444# SHS and RHS column section design (axial load and bending)
sc445# Plastic design of stanchions
sc446 Single angle - section design
sc447 Design of "I" beam curved on plan
sc448 Design of SHS beam curved on plan
sc449 Design of CHS beam curved on plan
sc450 Pin ended I, H, or channel section column
sc451 SHS, RHS and CHS column section design (axial load only)

sc452 I column in simple construction
sc453 SHS, RHS and CHS column in simple construction
sc454 Channel bending about minor axis
sc455 Steel stair with flat plate stringers
sc456 Laced or battened strut
sc457# Design of SHS section curved on elevation
sc458# Design of CHS section curved on elevation
sc459# Design of "I" beam curved in the vertical plane
sc460 Portal frame design - plastic analysis
sc462 Portal frame in boundary conditions (fire)
sc463 Channel subject to eccentric loading
sc464 Beam subject to eccentric loading
sc465 RHS beam - eccentric loading
sc466 Steel beam with openings in the web
sc467 Cellular and castellated beams
sc468 Beams formed from single angle
sc470 Stiffened plate girder
sc472 Design of Structural T-sections
sc474 Gantry girder
sc476 Wind moment design of unbraced frames
sc477 Axially loaded steel lattice connections
sc478 Chord and bracing connections with moments incl. knee joints
sc479 Hollow section chords w. gusset plates/universal section brace
sc480 Angle cleat connection
sc481 Fin plate connection
sc482 Angle seat connection
sc483 Shelf angle supporting slab
sc484 Flexible end plate
sc485 Full-depth end plate connection
sc486 Flush end plate haunched connection
sc487 Extended end plate haunched connection
sc488 Axially loaded column base for I sections
sc489 Axially loaded column base for SHS, RHS CHS sections
sc490 Column splice
sc491 Bolted end column splice
sc492 Beam splice
sc493 Universal section chord with hollow section brace
sc494 Portal apex connection
sc495 Cast-in plate to connect structural steel beam to concrete wall
sc496 Load bearing stiffener design
sc497 Section properties of haunched section
sc498 Bolts subject to eccentric loading
sc499 Stability checks for notched "I" beam to EC3

SCALE - Masonry Design to Eurocode 6, BS5628 and MEXE

sc503 Cantilever wall spanning horizontally
sc505 Wall panel
sc506 Panel with opening
sc510 Single leaf wall
sc511 Single leaf wall by effective eccentricities
sc512 Lateral resistance of wall by arching
sc515 Column
sc519 Bed joint reinforcement for laterally loaded masonry walls
sc520 Freestanding wall
sc521 Brick beam

sc525 Bearing
sc528 Simplified sub-frame analysis to EC6
sc529 Internal masonry wall
sc530 External cavity wall
sc532 External cavity wall - by vertical arching
sc535 Shear wall
sc536 Fin wall
sc537 Reinforced brick retaining wall
sc538 Reinforced brick column
sc540 Load distribution to shear walls
sc541 Support angles
sc543 Pippard/MEXE analysis for unit applied load
sc546 Pippard/MEXE analysis for C&U, AW and user defined bogies
sc547 Pippard/MEXE analysis for user defined loading
sc548 Assessment of masonry arch bridges by modified MEXE
sc550 Mechanism analysis of arches
sc552 Masonry dams
sc554 Masonry gravity wall

SCALE - Drainage and Surveying

sc560 Drain & sewer pipe sizing
sc565 Gutters and rain water pipes
sc565 Road alignment vertical curve
sc566 Road alignment horizontal curves
sc569 Areas and volumes for cuttings and embankments
sc570 Volumes from spot levels
sc571 Simpson's rule for volumes
sc580 Setting out piles
sc581 Analytical geometry based on the COGO approach
sc582 Traverse survey - open or closed
sc590 Crack movements - by tell-tales

SCALE - Analysis by Traditional Methods

sc601 Table of deflections for checking beams
sc602 Shears, moments, etc. for beams
sc603 Beams under combined axial and transverse loading
sc604 Continuous beam - moment distribution
sc605 Cantilever beam with varying section properties
sc606 Simply supported beam
sc608 Cranked or dogleg beam
sc610 Influence lines
sc611 Pigeaud's tables for concentrated loads on slabs
sc612 Rectangular culverts
sc614 Circular plate with UDL
sc615 Rectangular plates
sc620 Subframe analysis
sc621 Plane truss analysis - joint by joint
sc622 Plane truss analysis
sc623 Multi storey and multi bay frames
sc624 Multi storey frames
sc626 Vierendeel girders
sc628 Shear legs
sc632 Rectangular portal

sc634 Ridged portal
sc635 Two bay ridged portal
sc636 Couple roof
sc638 Circular arch
sc639 Helical stair
sc640 Deep beams
sc642 Roof trusses
sc643 Section design for UB's UC's SHS's RHS's & CHS's
sc649 Plastic section properties
sc650 Section properties - general
sc651 Section properties with weightings
sc652 Section properties - plate girder with welded connections
sc653 Section properties - plate girder with angle connections
sc659 Influence surfaces of elastic plates - Pucher's charts
sc660 Yield-lines
sc662 Suspension bridges
sc663 Suspension cable analysis
sc664 Dynamical behaviour
sc666 Elastic stability

SCALE - Pre and Post Processors for Structural Analysis

sc674 Derives moments and principal stresses from plate deflections
sc678 Guyed masts
sc679 Circular tanks
sc680 Joint coordinates of circular members
sc682 Beta angle for space frame members
sc684 Member stiffness matrices
sc686 Loss of stiffness due to partial plasticity
sc687 Equilibrium & compatibility check: plane frame & truss members
sc688 Equilibrium & compatibility check: plane grid members
sc689 Equilibrium & compatibility check: space frame & truss members
sc690 Support displacements to model for guy pretension
sc692 Modelling of guys for analysis by stiffness method
sc694 Loads on continuous beams - used in sheet pile design

SCALE - Loadings

sc701 Snow loading
sc702 Wind loads to BS6399-2:1997 and Eurocode 1
sc704 Lateral earth pressure from surcharge
sc705 Pressures from retained materials
sc706 Moments and forces in hopper bottoms
sc707 Moments and forces in cylindrical containers
sc710 Loading on strip footing
sc711 Column & foundation loads
sc715 Unit loads
sc716 Loading on domestic lintel
sc717 Unit loads for steel frames
sc718 Steel beam with welded bottom flange
sc720 Weighting of items comprising several parts
sc725 Factored load summary sheet
sc726 Eurocode load combinations

SCALE - Foundations

sc731 Notes on pilecaps
sc732 Pilecap for 2 piles - truss analogy
sc734 Pilecap for 4 piles - truss analogy
sc735 Pilecap for 5 piles - truss analogy
sc742 Pilecap for 2 piles - bending theory
sc743 Pilecap for 3 piles - bending theory
sc744 Pilecap for 4 piles - bending theory
sc745 Pilecap for 5 piles - bending theory
sc746 Pilecap for 6 piles - bending theory
sc747 Pilecap for 7 piles - bending theory
sc748 Pilecap for 8 piles - bending theory
sc749 Pilecap for 9 piles - bending theory
sc750 Concrete retaining wall
sc751 Active pressure on retaining wall to BS8002:1994 or Eurocode 7
sc752 Stability calculations for a retaining wall
sc754 Biaxial bending on pad base
sc755 Pad base
sc756 Preliminary sizing of trapezoidal combined base
sc757 Preliminary sizing of T-shaped combined base
sc758 Preliminary sizing of rectangular combined base
sc759 Preliminary design of tied separate bases
sc760 Combined base
sc761 Traditional raft foundation design
sc764 Beam on elastic foundation with load train - Hetenyi
sc765 Beam on elastic foundation
sc767 Active thrust on wall: cohesionless soil w. horizontal surface
sc768 Active & passive pressures on sheet pile wall - with two soils
sc769 Active wall pressure (Rankine) retaining soil slope
sc770 Slip circle analysis - Taylor's stability numbers
sc771 Slip circle analysis - Swedish method
sc772 Coefficient of volume compressibility and compression index
sc773 One dimensional consolidation beneath rectangular raft
sc775 Safe bearing pressures
sc776 Structural design of bituminous roads
sc777 Flexible pavement design to HD26/06
sc780 Soil pressures due to stacks
sc781 Elastic stresses within foundation material
sc782 Elastic stresses resulting from UDL on rectangular area
sc786 Vertical loads on straight bored piles in clay
sc787 Large diameter belled piles in clay
sc788 Pile loads from a crane base
sc789 Pile group analysis
sc790 Loads on piles in groups
sc791 Pile types and characteristics
sc792 Sheet retaining structures
sc793 Laterally loaded piles
sc794 Sheet pile wall - Das
sc796 Embedded depths of holding down bolts

SCALE - Steel Design to BS449 including Amendment 8,1989

sc300# I beam
sc305# I column

sc310# RHS beam
sc315# RHS column
sc320 Angle cleat
sc325 Angle seat
sc330 Flexible end plate
sc335 Extended end plate
sc340 Bolts
sc345 Column base
sc350 Steel guardrailing

Copyright 1986-2024 Fitzroy Systems Ltd.

Location: Triangle for main setting out of New Annexe

Solution of triangle given 2 sides and included angle

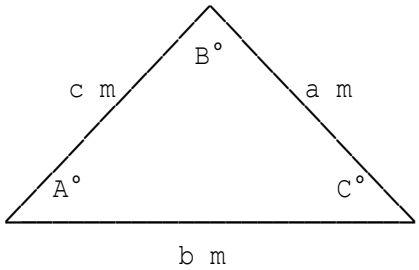

Length of side b	b=10 m
Length of side c	c=10 m
Included angle	A'=30°
From cosine formula	a=SQR(b^2+c^2-2*b*c*COS(A))=5.1764 m
	B'=DEG(B)=75°
	C'=DEG(C)=75°

Location: Equation solution for start of item G7

Simultaneous linear equations

with four unknowns

The solution of four
simultaneous equations:
a1.x + b1.y + c1.z + d1.u = e1
a2.x + b2.y + c2.z + d2.u = e2
a3.x + b3.y + c3.z + d3.u = e3
a4.x + b4.y + c4.z + d4.u = e4

having coefficients:

a1=2
b1=1
c1=1
d1=1
e1=11
a2=1
b2=2
c2=3
d2=2
e2=22
a3=3
b3=-1
c3=-1
d3=-1
e3=-6
a4=7
b4=-6
c4=1
d4=5
e4=18

Value of x x=1
Value of y y=2
Value of z z=3
Value of u u=4

Check by substitution in original equations
error1=a1*x+b1*y+c1*z+d1*u-e1=0
error2=a2*x+b2*y+c2*z+d2*u-e2=0
error3=a3*x+b3*y+c3*z+d3*u-e3=0
error4=a4*x+b4*y+c4*z+d4*u-e4=0

Location: Equation solution for 3 point problem

Equation to be solved is x^3 – a.x^2 + b.x – c = 0 where:

Coefficient	a=2
Coefficient	b=3
Constant	c=2.717

Copyright 1986-2024 Fitzroy Systems Ltd.

Location: Equation solution for quadratic.

Equation to be solved is x^4 – a.x^3 + b.x^2 – c.x + d = 0 where:

Coefficient	a=3
Coefficient	b=-4
Coefficient	c=-2
Constant	d=1

Copyright 1986-2024 Fitzroy Systems Ltd.

Location: Setting out for entrance curve

Setting out circular arc

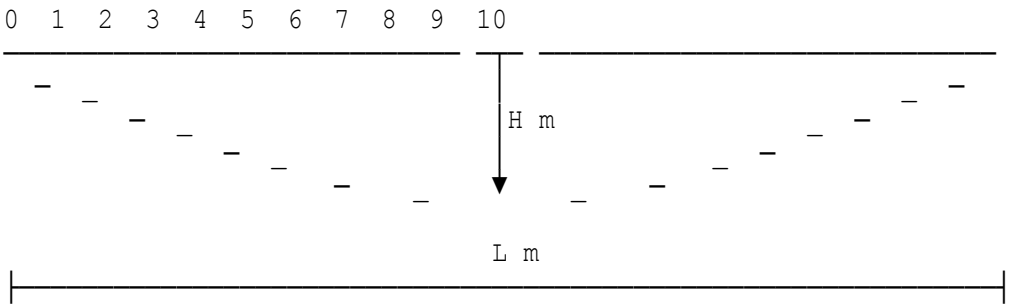

Length L=10 m
Offset at centre of arc H=1 m

Reference Position	Chainage m	Offset m
0	0	0
1	0.5	0.19631
2	1	0.36932
3	1.5	0.51998
4	2	0.64911
5	2.5	0.75735
6	3	0.84523
7	3.5	0.91317
8	4	0.96148
9	4.5	0.99038
10	5	1

Location: To find slope of function

Derivative of x^n is n.x^(n-1).

Value of x	x=2
Exponent	n=3
Derivative dy/dx	y'=n*x^(n-1)=12

Location: To find slope of water surface

Differentiation of a general function

Suppose that ym2,ym1,y0,y1 and y2 are the values of f(x) at a-2h,a-h, a,a+h and a+2h respectively. Then by applying Taylor's theorem it can be shown that, if h is small,

$$f'(a) \text{ approx} = \frac{8(y1-ym1)-(y2-ym2)}{12h}$$

$$\text{and } f''(a) \text{ approx} = \frac{16(y1+ym1)-(y2-ym2)-30y0}{12h^2}$$

Increment taken as h=1E-6
Value of x at which derivative (dy/dx) required: a=1
Expression f(x)= 2*x^2
f(x) at a-2h ym2=2*x^2=1.999992
f(x) at a-h ym1=2*x^2=1.999996
f(x) at a y0=2*x^2=2
f(x) at a+h y1=2*x^2=2.000004
f(x) at a+2h y2=2*x^2=2.000008

dy/dx y'=(8*(y1-ym1)-(y2-ym2))/(12*h)=4
d2y/dx2 y''=(16*(y1+ym1)-(y2+ym2)-30*y0)/(12*h^2)=3.999171364

Copyright 1986-2024 Fitzroy Systems Ltd.

Location: Area beneath pressure function

$$\int_a^b c.x^n.dx \quad \text{is} \quad \left[\frac{c.x^{(n+1)}}{n+1}\right]_a^b \quad \text{for} \quad n<>-1$$

Constant	c=1
Exponent	n=3
Lower limit	a=1
Upper limit	b=3
Integral	I=c*((b^(n+1))/(n+1)-(a^(n+1))/(n+1))=20

Copyright 1986-2024 Fitzroy Systems Ltd.

Location: Revolve area under y=e^x about y axis from x=1 to 2

Integration of a general function using Simpson's rule

If y1,y2,y3 are the ordinates at a-h, a and a+h respectively,
Simpson's rule may be written:

$$\int_{a-h}^{a+h} f(x)dx \text{ approx= } h/3 \ (f(a-h) + 4f(a) + f(a+h))$$

Usually Simpson's rule is applied by dividing the area between the ordinates y1 and y2n+1 into 2n strips. This gives for 12 strips:

$$\int_{a}^{b} f(x)dx \text{ approx=h/3(y1+y13+4(y2+y4+y6+y8+y10+y12)+2(y3+y5+y7+y9+y11))}$$

where h = (b-a)/12

Lower limit		a=1
Upper limit		b=2
Width of strip		h=(b-a)/12=0.08333333333
Function of x	f(x)= 2*PI*x*e^x	
Writing	k=4*(y(2)+y(4)+y(6)+y(8)+y(10)+y(12))=1111.327032	
Integral	I=h/3*(y(1)+y(13)+k+2*(y(3)+y(5)+y(7)+y(9)+y(11))) =46.42685176	

Location: Ex1 - Rectangle

Rectangle

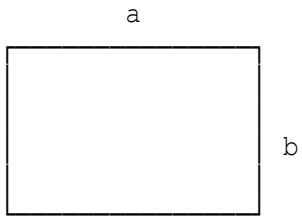

Plan on rectangle

Length of side a	a=5.5 m
Length of side b	b=3.5 m
Area of rectangle	Area=a*b=19.25 m²
Perimeter of rectangle	Perimeter=2*(a+b)=18 m

Copyright 1986-2024 Fitzroy Systems Ltd.

Location: Ex2 - Parallelogram

Parallelogram

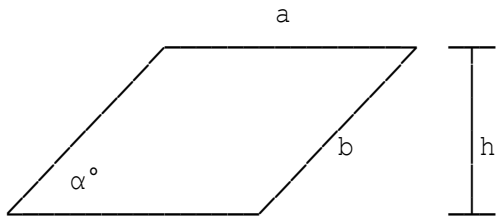

Plan on parallelogram

Length of side a	a=5 m
Length of side b	b=3 m
Angle α	alpha=45°
Perpendicular distance	h=b*SIN(RAD(alpha))=2.1213 m
Area of parallelogram	Area=a*h=10.607 m²
Perimeter of parallelogram	Perimeter=2*(a+b)=16 m

Copyright 1986-2024 Fitzroy Systems Ltd.

Location: Ex3 - Trapezium

Trapezium

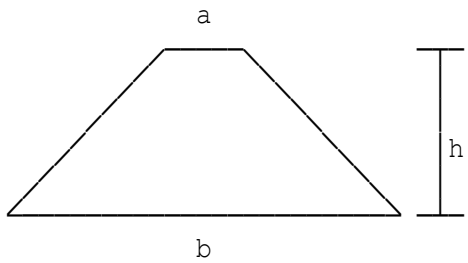

Plan on trapezium

Length of side a	a=5 m
Length of side b	b=10 m
Perpendicular distance	h=3 m
Area of trapezium	Area=0.5*(a+b)*h=22.5 m²

Copyright 1986-2024 Fitzroy Systems Ltd.

Location: Ex4 - Circle

Circle

Diameter of circle	d=5 m
Radius of circle	r=d/2=2.5 m
Circumference of circle	c=PI*d=15.708 m
Area of circle	Area=PI*r^2=19.635 m²

Location: Ex5 - Segment of circle

Segment of circle

```
              •   •
          •           •
        •               •
       •- - - - - - - - -•
        \               /
         \             /              Plan on segment
           \         /r
             \ θ° /
               \/
```

Radius of circle	r=5 m
Angle subtended at circle centre	theta=35°
Length of arc	arc=r*RAD(theta)=3.0543 m
Area of segment	Area=0.5*RAD(theta)*r^2=7.6358 m²

Copyright 1986-2024 Fitzroy Systems Ltd.

Location: Ex6 - Ellipse

Ellipse

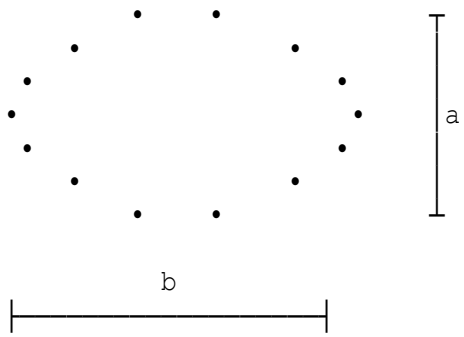

Plan on ellipse

Diameter of shortest axis	a=5 m
Diameter of longest axis	b=7 m
Area of ellipse	Area=PI*a*b/4=27.489 m²

Copyright 1986-2024 Fitzroy Systems Ltd.

Location: Ex7 - Solid cylinder

Solid cylinder

Diameter of cylinder	d=5 m
Height of cylinder	h=6 m
Area of cylinder end	a=PI*d^2/4=19.635 m²
Volume of cylinder	V=a*h=117.81 m³
Curved surface area	C=PI*d*h=94.248 m²
Total surface area	S=2*a+C=133.52 m²

Copyright 1986-2024 Fitzroy Systems Ltd.

Location: Ex8 - Hollow cylinder

Hollow cylinder

Outside diameter of cylinder	D=4.5 m
Inside diameter of cylinder	d=4 m
Height of cylinder	h=5 m
Area of cylinder end	a=PI*(D^2-d^2)/4=3.3379 m^2
Volume of cylinder	V=a*h=16.69 m^3

Copyright 1986-2024 Fitzroy Systems Ltd.

Location: Ex9 - Cone

Cone

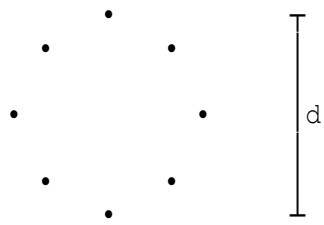

Plan on cone base

Diameter of base	d=4 m
Vertical height of cone	h=5 m
Position of centroid	lx=d/2=2 m
Radius of base	r=d/2=2 m
Slant height	l=SQR(r^2+h^2)=5.3852 m
Area of base	a=PI*r^2=12.566 m²
Volume	V=a*h/3=20.944 m³
Curved surface area	C=PI*r*l=33.836 m²
Total surface area	S=a+C=46.402 m²

Copyright 1986-2024 Fitzroy Systems Ltd.

Location: Ex10 - Volume of concrete ball

Sphere & spherical cap

Diameter of sphere	d=0.25 m
Radius of sphere	r=d/2=0.125 m
Volume of sphere	V=(4/3)*PI*r^3=0.0081812 m³
Curved surface area of sphere	C=4*PI*r^2=0.19635 m²
Height of altitude of cap	h=0.05 m
Radius of base of cap	r1=SQR(2*r*h-h^2)=0.1 m
Surface area of cap	S=2*PI*r*h=0.03927 m²
Volume of spherical cap	V=PI/6*(3*r1^2+h^2)*h=0.85085E-3 m³

Copyright 1986-2024 Fitzroy Systems Ltd.

Location: Ex11 - Cuboid

Cuboid

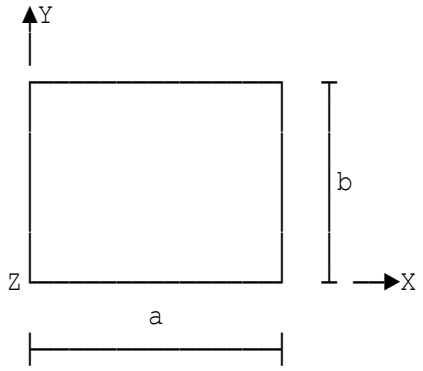

Plan on base
and top of
cuboid.

Base length a	a=4 m
Base length b	b=6 m
Height of cuboid in Z-direction	h=5 m
Position of centroid X-direction	lx=a/2=2 m
Position of centroid Y-direction	ly=b/2=3 m
Volume of cuboid	V=a*b*h=120 m^3
Surface area of base and top	S1=2*a*b=48 m^2
Surface area of vertical sides	S2=2*(a*h+b*h)=100 m^2
Total surface area	SA=S1+S2=148 m^2

Copyright 1986-2024 Fitzroy Systems Ltd.

Location: Ex12 - Triangular based pyramid

Triangular based pyramid

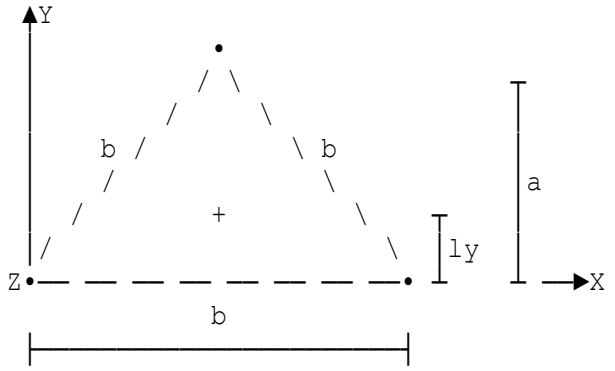

Plan on base of triangular pyramid. The base is an equilateral triangle.

$b^2 = a^2 + (b/2)^2$
ly = distance to centroid of base

Base dimension b	b=10 m
Slant height	l=12 m
Dimension a	a=(b^2-(b/2)^2)^0.5=8.6603 m
Height of pyramid in Z-direction	h=(l^2-(a/3)^2)^0.5=11.648 m
Position of centroid Y-direction	ly=a/3=2.8868 m
Area of pyramid base	A=b*a/2=43.301 m²
Volume of pyramid	V=1/3*A*h=168.12 m³
Area of base	S1=A=43.301 m²
Slant surface area (three sides)	S2=3*b*l/2=180 m²
Total surface area	SA=S1+S2=223.3 m²

Copyright 1986-2024 Fitzroy Systems Ltd.

Location: Ex13 - Square based pyramid

Square based pyramid

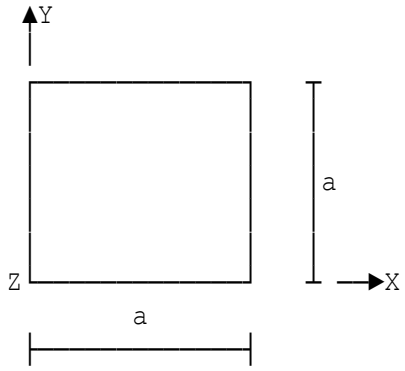

Plan on base of square pyramid.

Base length a	a=6 m
Height of pyramid in Z-direction	h=8 m
Base length b	b=6 m
Slant height X-direction	lx'=(h^2+(a/2)^2)^0.5=8.544 m
Slant height Y-direction	ly'=8.544 m
Position of centroid X-direction	lx=a/2=3 m
Position of centroid Y-direction	ly=3 m
Volume of pyramid	V=a*a*h/3=96 m³
Surface area of base	S1=a*a=36 m²
Slant surface area (four sides)	S2=2*(a*ly'/2+a*lx'/2)=102.53 m²
Total surface area	SA=S1+S2=138.53 m²

Copyright 1986-2024 Fitzroy Systems Ltd.

Location: Ex14 - Rectangular based pyramid

Rectangular based pyramid

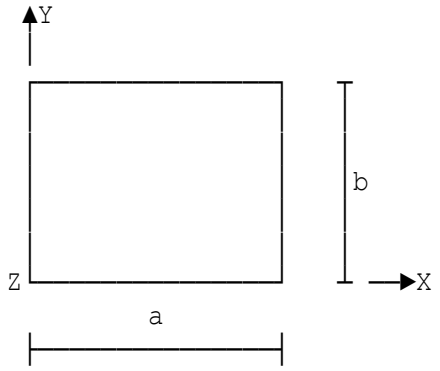

Plan on base of
rectangular pyramid.

Base length a	a=8 m
Base length b	b=6 m
Height of pyramid in Z-direction	h=8 m
Slant height X-direction	lx'=(h^2+(a/2)^2)^0.5=8.9443 m
Slant height Y-direction	ly'=(h^2+(b/2)^2)^0.5=8.544 m
Position of centroid X-direction	lx=a/2=4 m
Position of centroid Y-direction	ly=b/2=3 m
Volume of pyramid	V=a*b*h/3=128 m³
Surface area of base	S1=a*b=48 m²
Slant surface area (four sides)	S2=2*(a*ly'/2+b*lx'/2)=122.02 m²
Total surface area	SA=S1+S2=170.02 m²

Location: Ex15 - Triangular prism

Triangular prism

```
 ▲Y
 |        •
 |       /| \
 |      / |    \                              Plan on base of
 |     /  |       \                           triangular prism.
 |   b/   |          \ d                      Top prism has the
 |   /    |a            \                     same size as the
 |  /     |   •CG          \                  bottom prism.
 | /      |                    \
Z•— — —┴— — — — — — — — —•  ──▶X               CG = centroid

 ├── x ──┼──────── (c-x)──────────┤

 ├──────────────── c ──────────────┤
```

Base dimension b	b=4.0311 m
Base dimension c	c=7 m
Base dimension d	d=4.0311 m
Length of prism in Z-direction	h=9 m
Dimension x	x=(b^2+c^2-d^2)/(2*c)=3.5 m
Dimension a	a=(b^2-x^2)^0.5=1.9999 m

NOTE: The position of centroid is at the point at which the three medians of the base triangle intersect.

Volume of prism	V=c*a/2*h=62.998 m³
Area of prism base	S1=c*a/2=6.9998 m²
Area of prism top	S2=c*a/2=6.9998 m²
Surface area (three sides)	S3=(b+c+d)*h=135.56 m²
Total surface area	SA=S1+S2+S3=149.56 m²

Copyright 1986-2024 Fitzroy Systems Ltd.

Location: Ex16 - Hexagon

Hexagon

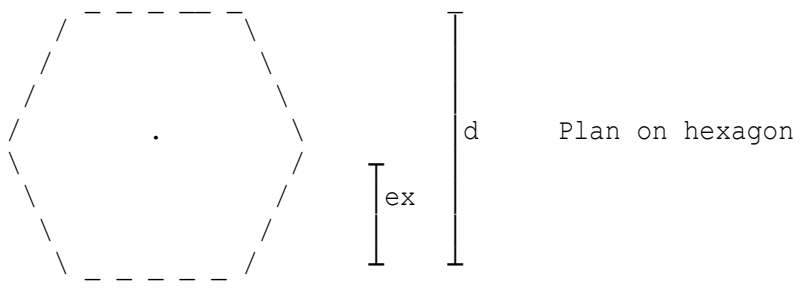

Dimension	d=6 m
Area of hexagon	A=0.866*d^2=31.176 m²
Position of centroid	ex=d/2=3 m

Location: Ex17 - Regular hexagon pyramid

Regular hexagon pyramid

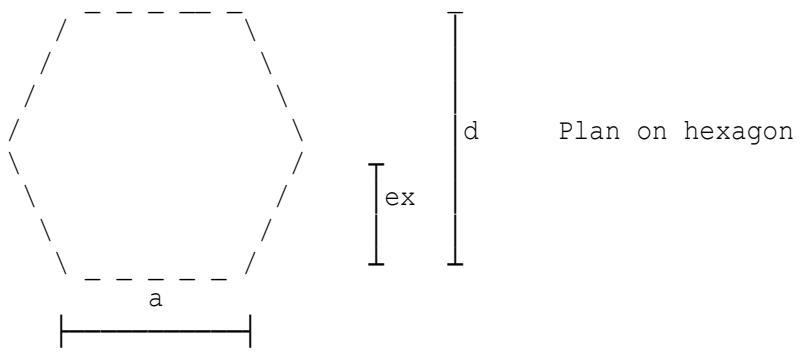

The hexagon base is regular and the pyramid is straight.

Pyramid side dimension	a=6 m
Height of the pyramid	h=9 m
Dimension d	d=2*a/2*TAN(RAD(60))=10.392 m
Area of hexagon base	A=0.866*d^2=93.528 m²
Position of centroid	ex=d/2=5.1962 m
Volume of hexagon pyramid	V=1/3*(6*a*ex/2)*h=280.59 m³

Alternatively the volume can also be calculated using the following expression:

Volume of hexagon pyramid	V=1/3*A*h=280.58 m³

The slant height is from the vertex of the pyramid to the midpoint of the pyramid side.

Slant height	ly=(h^2+ex^2)^0.5=10.392 m
Area of base	S1=A=93.528 m²
Surface area (six sides)	S2=6*(a*ly/2)=187.06 m²
Total surface area	SA=S1+S2=280.59 m²

Location: Ex18 - Circular arc

Circular arc

```
                 L
         ├──────────────────┤

                • ┬ •
  Arc of ┐ •     │     •
  circle  •      │d     •
         •- - - - - - - - -•
          \               /
           \             /              Plan on segment
             \         /R
               \     /
                 \/
                  └ Centre of circle
```

Dimension	L=6 m
Dimension	d=2 m
Radius of circle	R=(d^2+(L^2/4))/(2*d)=3.25 m

Location: Ex19 - Triangle

Triangle

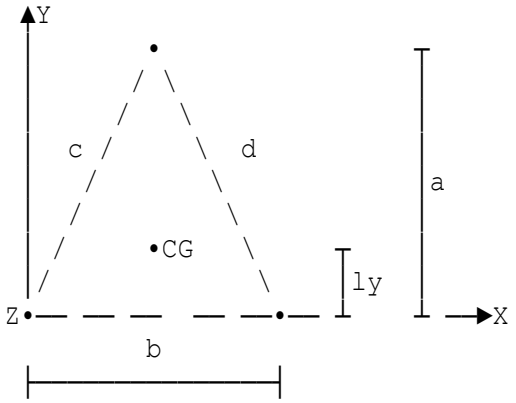

Plan on base of
triangular prism.

CG = centroid

c = d

The triangle is an isosceles triangle.

Dimension	b=6 m
Dimension	a=4 m

The position of centroid is at the point at which the three medians of the triangle intersect.

Position of centroid Y-direction	ly=a/3=1.3333 m
Area of triangle	A=b*a/2=12 m²

Copyright 1986-2024 Fitzroy Systems Ltd.

Location: Ex20 - Circle

Circle

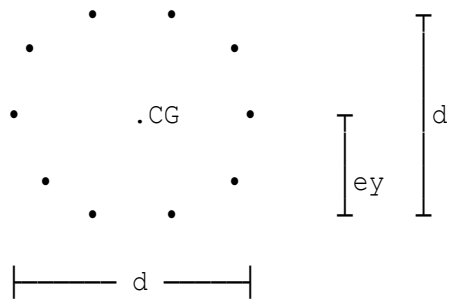

Plan on circle

Diameter of base	d=4 m
Position of centroid	ey=d/2=2 m
Radius of circle	r=d/2=2 m
Area of circle	a=PI*r^2=12.566 m²

Location: Ex21 - Semi-circle

Semi-circle

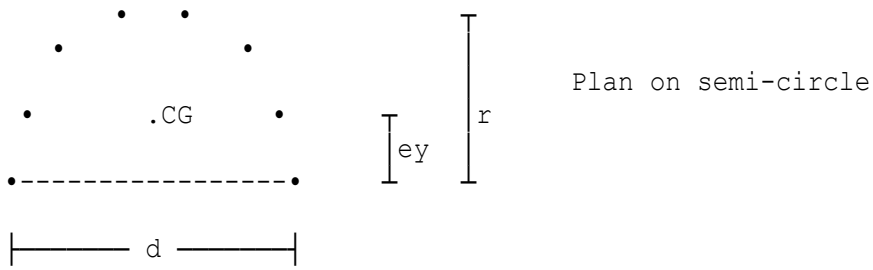

Radius of semi-circle	r=4 m
Position of centroid	ey=0.424*r=1.696 m
Area of semi-circle	A=1.5708*r^2=25.133 m²

Location: Ex22 - Triangle

Triangle

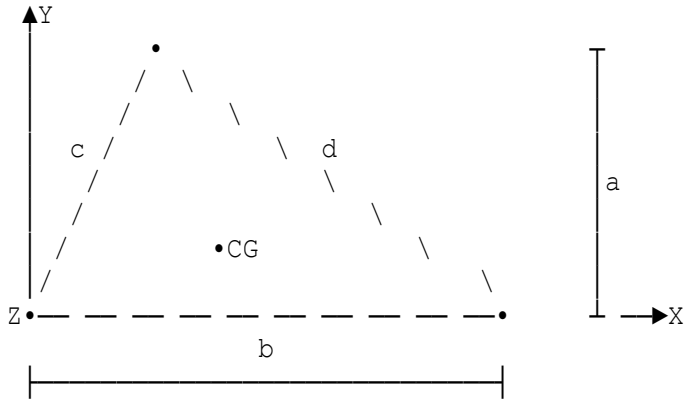

Plan on base of triangular prism.

CG = centroid

Dimension	b=6 m
Dimension	a=4 m
Area of triangle	A=b*a/2=12 m²

The position of centroid is at the point at which the three medians of the triangle intersect.

Location: Ex23 - Triangular based pyramid (regular tetrahedron)

Triangular based pyramid - regular tetrahedron

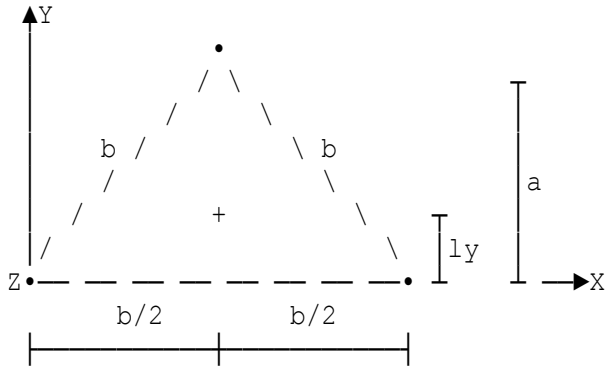

Plan on base of regular tetrahedron. All six edges are of the same length.

ly = distance to centroid of base.

$b^2 = a^2 + (b/2)^2$

Base dimension b	b=4 m

The slant height is from the vertex of the pyramid to the midpoint of the pyramid side.

Slant height	l=(b^2-(b/2)^2)^0.5=3.4641 m
Dimension a	a=(b^2-(b/2)^2)^0.5=3.4641 m
Height of pyramid in Z-direction	h=(l^2-(a/3)^2)^0.5=3.266 m
Position of centroid Y-direction	ly=a/3=1.1547 m
Volume of pyramid	V=1/6*a*b*h=7.5425 m^3
Area of base	S1=b*a/2=6.9282 m^2
Slant surface area (three sides)	S2=3*b*l/2=20.785 m^2
Total surface area	SA=S1+S2=27.713 m^2

Location: Cubes in 3rd floor slab

Number of values in sample	N=12
Measured value	x(1)=30.5 N/mm²
Measured value	x(2)=26.3 N/mm²
Measured value	x(3)=32.6 N/mm²
Measured value	x(4)=32.5 N/mm²
Measured value	x(5)=28.9 N/mm²
Measured value	x(6)=25 N/mm²
Measured value	x(7)=32.1 N/mm²
Measured value	x(8)=30.4 N/mm²
Measured value	x(9)=31.4 N/mm²
Measured value	x(10)=32.3 N/mm²
Measured value	x(11)=33.5 N/mm²
Measured value	x(12)=33.4 N/mm²
No. in sample	12
Highest value	33.5 N/mm²
Lowest value	25 N/mm²
Range	8.5 N/mm²
Sum of values	Sum'x=335.5 N/mm²
Mean value	xbar=Sum'x/N=27.958 N/mm²
Variance	V=Sumd'2/(N-1)=13.231
Standard deviation σ	sigma=SQR(V)=3.6374 N/mm²
Coefficient of variation	v=100*(sigma/xbar)=13.01 %
Percentage	per=5
Factor k as given by Himsworth	k=TABLE 1 for per=5 =1.6795
Minimum desired strength	xo=xbar*(1-k*v/100)=21.849 N/mm²

Copyright 1986-2024 Fitzroy Systems Ltd.

Location: Latent roots for 2 x 2 matrix

Latent roots or characteristic values or eigenvalues

```
Elements of K                    k11=3
                                 k12=2
                                 k21=1
                                 k22=2
D=k1*k2-k21*k12=0
```

Copyright 1986-2024 Fitzroy Systems Ltd.

Location: Latent roots for 3 x 3 matrix

Latent roots or characteristic values or eigenvalues

```
Elements of K                     k11=1250
                                  k12=-500
                                  k13=0
                                  k21=-500
                                  k22=875
                                  k23=-375
                                  k31=0
                                  k32=-750
                                  k33=750
Check | K - alpha.I | = 0  for first root:
                                  k1=k11-alpha=-460.58
                                  k2=k22-alpha=-835.58
                                  k3=k33-alpha=-960.58
D=k1*(k2*k3-k23*k32)-k12*(k21*k3-k23*k31)+k13*(k21*k32-k2*k31)=-2.0336
Check | K - beta.I | = 0  for second root:
                                  k1=k11-beta=250
                                  k2=k22-beta=-125
                                  k3=k33-beta=-250
D=k1*(k2*k3-k23*k32)-k12*(k21*k3-k23*k31)+k13*(k21*k32-k2*k31)=-0.64246
Check | K - gamma.I | = 0  for third root:
                                  k1=k11-gamma=1085.6
                                  k2=k22-gamma=710.58
                                  k3=k33-gamma=585.58
D=k1*(k2*k3-k23*k32)-k12*(k21*k3-k23*k31)+k13*(k21*k32-k2*k31)=0
```

Location: Latent roots for 4 x 4 matrix

Latent roots or characteristic values or eigenvalues

```
Elements of K                     k11=-6
                                  k12=2
                                  k13=1
                                  k14=-1
                                  k21=2
                                  k22=-2
                                  k23=1
                                  k24=3
                                  k31=1
                                  k32=1
                                  k33=-6
                                  k34=0
                                  k41=-1
                                  k42=3
                                  k43=0
                                  k44=-1
Check | K - alpha.I | = 0  for first root:
                                  k1=k11-alpha=1.6701
                                  k2=k22-alpha=5.6701
                                  k3=k33-alpha=1.6701
                                  k4=k44-alpha=6.6701
D1=k1*(k2*(k3*k4-k34*k43)-k23*(k32*k4-k34*k42)+k24*(k32*k43-k3*k42))
  =69.25
D2=-k12*(k21*(k3*k4-k34*k43)-k23*(k31*k4-k34*k41)+k24*(k31*k43-k3
   *k41))=-41.24
D3=k13*(k21*(k32*k4-k34*k42)-k2*(k31*k4-k34*k41)+k24*(k31*k42-k32
   *k41))=-12.48
D4=-k14*(k21*(k32*k43-k3*k42)-k2*(k31*k43-k3*k41)+k23*(k31*k42-k32
   *k41))=-15.491
Determinant                       D=D1+D2+D3+D4=0.038577
Check | K - beta.I | = 0  for second root:
                                  k1=k11-beta=0.36953
                                  k2=k22-beta=4.3695
                                  k3=k33-beta=0.36953
                                  k4=k44-beta=5.3695
D1=k1*(k2*(k3*k4-k34*k43)-k23*(k32*k4-k34*k42)+k24*(k32*k43-k3*k42))
  =-0.0093137
D2=-k12*(k21*(k3*k4-k34*k43)-k23*(k31*k4-k34*k41)+k24*(k31*k43-k3
   *k41))=0.58497
D3=k13*(k21*(k32*k4-k34*k42)-k2*(k31*k4-k34*k41)+k24*(k31*k42-k32
   *k41))=-0.72329
D4=-k14*(k21*(k32*k43-k3*k42)-k2*(k31*k43-k3*k41)+k23*(k31*k42-k32
   *k41))=0.16811
Determinant                       D=D1+D2+D3+D4=0.020471
Check | K - gamma.I | = 0  for third root:
                                  k1=k11-gamma=-3.382
                                  k2=k22-gamma=0.61797
                                  k3=k33-gamma=-3.382
                                  k4=k44-gamma=1.618
D1=k1*(k2*(k3*k4-k34*k43)-k23*(k32*k4-k34*k42)+k24*(k32*k43-k3*k42))
  =-86.034
```

```
D2=-k12*(k21*(k3*k4-k34*k43)-k23*(k31*k4-k34*k41)+k24*(k31*k43-k3
   *k41))=45.416
D3=k13*(k21*(k32*k4-k34*k42)-k2*(k31*k4-k34*k41)+k24*(k31*k42-k32
   *k41))=14.236
D4=-k14*(k21*(k32*k43-k3*k42)-k2*(k31*k43-k3*k41)+k23*(k31*k42-k32
   *k41))=26.382
Determinant                        D=D1+D2+D3+D4=2.9468E-6
Check | K - delta.I | = 0  for fourth root:
                                   k1=k11-delta=-7.6575
                                   k2=k22-delta=-3.6575
                                   k3=k33-delta=-7.6575
                                   k4=k44-delta=-2.6575
D1=k1*(k2*(k3*k4-k34*k43)-k23*(k32*k4-k34*k42)+k24*(k32*k43-k3*k42))
  =21.868
D2=-k12*(k21*(k3*k4-k34*k43)-k23*(k31*k4-k34*k41)+k24*(k31*k43-k3
   *k41))=-40.77
D3=k13*(k21*(k32*k4-k34*k42)-k2*(k31*k4-k34*k41)+k24*(k31*k42-k32
   *k41))=-3.035
D4=-k14*(k21*(k32*k43-k3*k42)-k2*(k31*k43-k3*k41)+k23*(k31*k42-k32
   *k41))=21.938
Determinant                        D=D1+D2+D3+D4=-7.3703E-6
```

Copyright 1986-2024 Fitzroy Systems Ltd.

Location: Largest latent root for 4 x 4 matrix

Latent roots or characteristic values or eigenvalues

No. of elements in square matrix	nel=16
Number of rows or columns	a=SQR(nel)=4
Element 1	a(1)=5
Element 2	a(2)=2
Element 3	a(3)=1
Element 4	a(4)=-1
Element 5	a(5)=2
Element 6	a(6)=9
Element 7	a(7)=1
Element 8	a(8)=3
Element 9	a(9)=1
Element 10	a(10)=1
Element 11	a(11)=5
Element 12	a(12)=0
Element 13	a(13)=-1
Element 14	a(14)=3
Element 15	a(15)=0
Element 16	a(16)=6
Largest latent root	lambda=11.286

Copyright 1986-2024 Fitzroy Systems Ltd.

Location: Centre of gravity of component A-12

Weight	w(1)=5000 kN
X-coordinate	x(1)=10 m
Y-coordinate	y(1)=10 m
Z-coordinate	z(1)=0 m
Weight	w(2)=3000 kN
X-coordinate	x(2)=5 m
Y-coordinate	y(2)=5 m
Z-coordinate	z(2)=0 m
Weight	w(3)=5000 kN
X-coordinate	x(3)=15 m
Y-coordinate	y(3)=15 m
Z-coordinate	z(3)=0 m
Weight	w(4)=3000 kN
X-coordinate	x(4)=20 m
Y-coordinate	y(4)=20 m
Z-coordinate	z(4)=0 m
Weight	w(5)=0 kN
X-coordinate	x(5)=0 m
Y-coordinate	y(5)=0 m
Z-coordinate	z(5)=0 m
Number of weights	4
Total of all weights	16000 kN
Total moment about x axis	sigwx=200000 kNm
y axis	sigwy=200000 kNm
z axis	sigwz=0 kNm
Centroid	xbar=sigwx/sigw=12.5 m
	ybar=sigwy/sigw=12.5 m
	zbar=sigwz/sigw=0 m

Location: Example: symmetric matrix arithmetic

Total number of elements in matrix n=16

Elements of matrix A order

— left to right — top to bottom

1.36	-0.48	-1	0
-0.48	1.64	0	0
-1	0	1.36	0.48
0	0	0.48	1.64

MATRIX [A] AFTER INVERSION:

Elements of matrix A order

— left to right — top to bottom

2.5031	0.7326	2.0525	-0.60073
0.7326	0.82418	0.60073	-0.17582
2.0525	0.60073	2.5031	-0.7326
-0.60073	-0.17582	-0.7326	0.82418

Greek alphabet **Upper case** **Lower case**

(with SCALE character references in parentheses)

Alpha	Α	(A)	α	(224)
Beta	Β	(B)	β	(225)
Gamma	Γ	(226)	γ	(128)
Delta	Δ	(129)	δ	(235)
Epsilon	Ε	(E)	ε	(238)
Zeta	Ζ	(Z)		-
Eta	Η	(H)	η	(131)
Theta	Θ	(233)	θ	(132)
Iota	Ι	(I)		-
Kappa	Κ	(K)	κ	(134)
Lambda		-	λ	(136)
Mu	Μ	(M)	μ	(230)
Nu	Ν	(N)		-
Xi		-		-
Omicron	Ο	(O)	ο	(o)
Pi	Π	(139)	π	(227)
Rho	Ρ	(P)	ρ	(140)
Sigma	Σ	(228)	σ	(229)
Tau	Τ	(T)	τ	(231)
Upsilon	Υ	(Y)		-
Phi	Φ	(232)	φ	(237)
Chi	Χ	(X)	χ	(143)
Psi	Ψ	(144)	ψ	(145)
Omega		-		-

Mathematical Symbols

(with SCALE character references in parentheses)

Sterling	£	(£)
Dollar	$	($)
Euro	€	(148)
Diameter	Ø	(23)
Infinity	∞	(236)
Quarter	¼	(172)
Half	½	(171)
Squared	²	(253)
Cubed	³	(169)
To the fourth	⁴	(174)
To the sixth	⁶	(175)
Divide	÷	(246)
Approx	≈	(247)
Degrees	°	(248)
Identical	≡	(240)
Plus-minus	±	(241)
Greater or equal	≥	(242)
Less or equal	≤	(243)
Square root	√	(251)

Greek alphabet **Upper case** **Lower case** **ALL BOLD**

(with SCALE character references in parentheses)

Alpha	**Α**	**(A)**	**α**	**(224)**
Beta	**Β**	**(B)**	**β**	**(225)**
Gamma	**Γ**	**(226)**	**γ**	**(128)**
Delta	**Δ**	**(129)**	**δ**	**(235)**
Epsilon	**Ε**	**(E)**	**ε**	**(238)**
Zeta	**Ζ**	**(Z)**		**-**
Eta	**Η**	**(H)**	**η**	**(131)**
Theta	**Θ**	**(233)**	**θ**	**(132)**
Iota	**Ι**	**(I)**		**-**
Kappa	**Κ**	**(K)**	**κ**	**(134)**
Lambda		**-**	**λ**	**(136)**
Mu	**Μ**	**(M)**	**μ**	**(230)**
Nu	**Ν**	**(N)**		**-**
Xi		**-**		**-**
Omicron	**Ο**	**(O)**	**ο**	**(o)**
Pi	**Π**	**(139)**	**π**	**(227)**
Rho	**Ρ**	**(P)**	**ρ**	**(140)**
Sigma	**Σ**	**(228)**	**σ**	**(229)**
Tau	**Τ**	**(T)**	**τ**	**(231)**
Upsilon	**Υ**	**(Y)**		**-**
Phi	**Φ**	**(232)**	**φ**	**(237)**
Chi	**Χ**	**(X)**	**χ**	**(143)**
Psi	**Ψ**	**(144)**	**ψ**	**(145)**
Omega		**-**		**-**

Mathematical Symbols

(with SCALE character references in parentheses)

Sterling	**£**	**(£)**
Dollar	**$**	**($)**
Euro	**€**	**(148)**
Diameter	**Ø**	**(23)**
Infinity	**∞**	**(236)**
Quarter	**¼**	**(172)**
Half	**½**	**(171)**
Squared	**²**	**(253)**
Cubed	**³**	**(169)**
To the fourth	**⁴**	**(174)**
To the sixth	**⁶**	**(175)**
Divide	**÷**	**(246)**
Approx	**≈**	**(247)**
Degrees	**°**	**(248)**
Identical	**≡**	**(240)**
Plus-minus	**±**	**(241)**
Greater or equal	**≥**	**(242)**
Less or equal	**≤**	**(243)**
Square root	**√**	**(251)**

Imperial second moment of area I=0.080594135802469 ft^4
Metric second moment of area =0.69560595846272E-3 m^4
=69560.595846272 cm^4
=695.60595846272E6 mm^4

Copyright 1986-2024 Fitzroy Systems Ltd.

Sum lent (principal)	s=100
Compound interest rate	p=5 %/year
Interest paid every	t=1 months
Length of loan period	n=1 years
	T=n*12=12 months
At the end of 12 months the principal amount is	A=s*(1+p/(12/t*100))^(T/t)=105.12

Copyright 1986-2024 Fitzroy Systems Ltd.

Sum lent (principal)	s=99.99
Length of loan period	n=10 years
Compound interest rate	p=14.5 %/year
	r=p/100=0.145
Monthly repayment	m=DE2(s*r*(1+r)^n/(12*((1+r)^n-1)))
	=1.63
Total interest paid	Ti=m*n*12-s=95.61

Copyright 1986-2024 Fitzroy Systems Ltd.

Sum lent (principal)	s=99.99
Monthly repayment	m=1.63
Length of loan period	n=10 years
Compound interest rate	p=14.52 % per annum

Copyright 1986-2024 Fitzroy Systems Ltd.

Sum lent (principal)	s=10000
Compound interest rate	p=0.35 %/week

At the end of 52 weeks the
principal amount is A=11992.33

Polynomial fit:
264.14 * x^0 ± 0.98294
0.75711 * x^1 ± 0.09386
-0.043598 * x^2 ± 0.0026634
0.32629E+3 * x^3 ± 30.279E-6
-1.0476E+6 * x^4 ± 0.16147E-6
1.5212E-9 * x^5 ± 0.40443E-9
-0.77855E-12 * x^6 ± 0.3838E-12

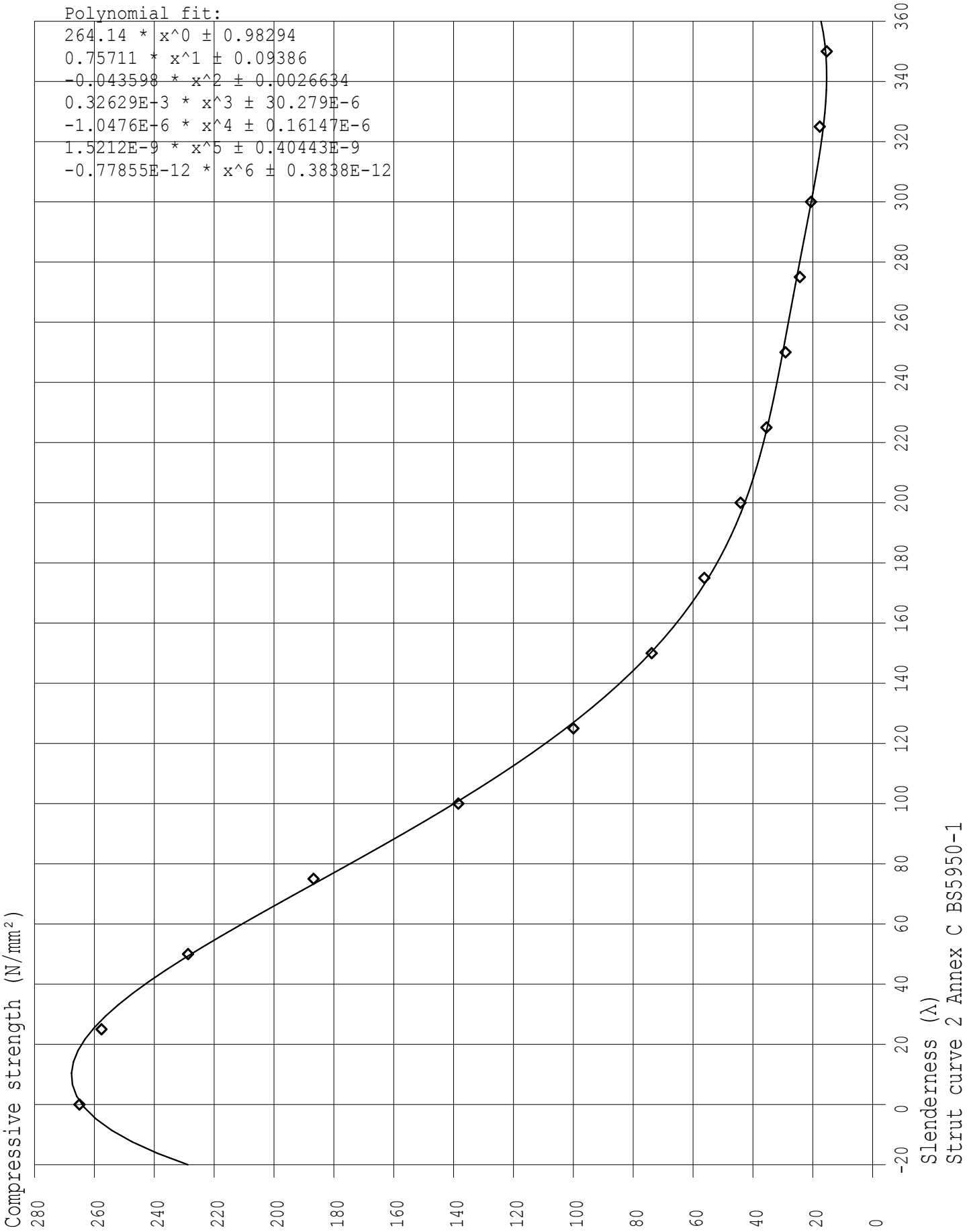

Copyright 1986-2024 Fitzroy Systems Ltd.

Location: Channel section used as a test example

Depth of section	D=200 mm
Width of section	B=200 mm
Thickness of web	t=10 mm
Thickness of flange	T=10 mm

Location: Small beam - high-yield steel - no compression steel

Bending in rectangular beams

Calculations are in accordance with Clause 3.4.4.4 of BS8110: Part 1 and thus assume the use of a simplified rectangular concrete stress-block and that the depth to the neutral axis is restricted to 0.5*d.

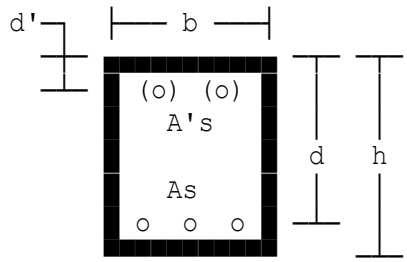

Design to BS8110(1997) with partial safety factor for steel gammaS=1.15
Moment before redistribution Mbef=12 kNm
Beam being analysed is considered as non-continuous.
Characteristic concrete strength fcu=35 N/mm²
Max.aggregate size (for bar spc.) hagg=15 mm
Char.strength of long'l bars fy=500 N/mm²
Longitudinal reinforcement is high-yield steel.
Diameter of tension bars dia=10 mm
Diameter of link legs dial=8 mm
Designated exposure class is XC1
Specified fixing tolerance tol=10 mm
Nominal concrete cover cover=25 mm
Overall depth of section h=275 mm
Effective depth of section d=237 mm
Breadth of section b=200 mm

Longitudinal reinforcement

TENSION	**Characteristic strength**	**500 N/mm²**
REINFORCEMENT	**Diameter of bars**	**10 mm**
SUMMARY	**Number of bars**	**2**
	arranged in a single layer	
	Cover to all steel	**25 mm**
	Area of steel required	**122.58 mm²**
	Area of steel provided	**157.08 mm²**
	Percentage provided	**0.2856 %**
	Weight of steel provided	**1.2331 kg/m**
	Maximum clear spacing	**180 mm**
	Link size assumed	**8 mm**

Location: Narrow deep beam - mild steel - no compression steel

Bending in rectangular beams

Calculations are in accordance with Clause 3.4.4.4 of BS8110: Part 1 and thus assume the use of a simplified rectangular concrete stress-block and that the depth to the neutral axis is restricted to 0.5*d.

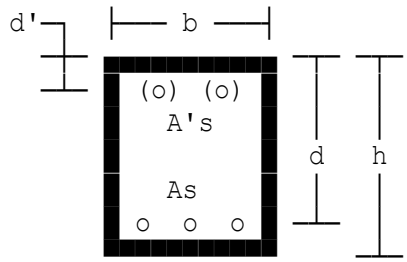

Design to BS8110(1997) with partial safety factor for steel gammaS=1.15
Moment before redistribution Mbef=1000 kNm
Beam being analysed is considered as continuous.
Design moment (after redistrib.) M=1000 kNm
Characteristic concrete strength fcu=30 N/mm²
Max.aggregate size (for bar spc.) hagg=15 mm
Char.strength of long'l bars fy=250 N/mm²
Longitudinal reinforcement is mild steel.
Diameter of tension bars dia=25 mm
Diameter of link legs dial=12 mm
Designated exposure class is XC2
Specified fixing tolerance tol=10 mm
Nominal concrete cover cover=35 mm
Overall depth of section h=950 mm
Effective depth of section d=865 mm
Breadth of section b=300 mm

Longitudinal reinforcement

TENSION	**Characteristic strength**	**250 N/mm²**
REINFORCEMENT	**Diameter of bars**	**25 mm**
SUMMARY	**Number of bars**	**14**
	arranged in 4 layers	
	Cover to all steel	**35 mm**
	Area of steel required	**6718.4 mm²**
	Area of steel provided	**6872.2 mm²**
	Percentage provided	**2.4113 %**
	Weight of steel provided	**53.947 kg/m**
	Maximum clear spacing	**288 mm**
	Link size assumed	**12 mm**

WARNING:
As overall depth h exceeds 750 mm bars to control cracking must be provided on side faces of beam (Clause 3.12.5.4 and 3.12.11.2.6).

Location: Shallow beam - square twist - with compression steel

Bending in rectangular beams

Calculations are in accordance with Clause 3.4.4.4 of BS8110: Part 1 and thus assume the use of a simplified rectangular concrete stress-block and that the depth to the neutral axis is restricted to 0.5*d.

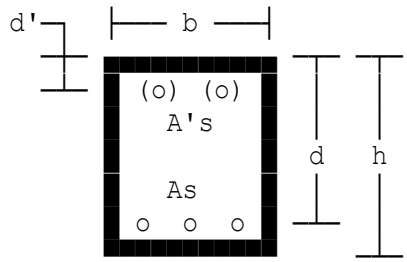

Design to BS8110(1997) with partial safety factor for steel gammaS=1.15
Moment before redistribution Mbef=81.8 kNm
Beam being analysed is considered as continuous.
Design moment (after redistrib.) M=71 kNm
Characteristic concrete strength fcu=40 N/mm²
Max.aggregate size (for bar spc.) hagg=15 mm
Char.strength of long'l bars fy=425 N/mm²
Steel strength other than those given in Table 3.1 of BS8110.
Specified min.steel percentage permin=0.16 %
Diameter of tension bars dia=12 mm
Diameter of link legs dial=10 mm
Nominal concrete cover cover=30 mm
Overall depth of section h=150 mm
Effective depth of section d=104 mm
Breadth of section b=1000 mm

Longitudinal reinforcement

Diameter of compression bars diac=12 mm
Depth to compression bars d'=46 mm

TENSION	**Characteristic strength**	**425 N/mm²**
REINFORCEMENT	**Diameter of bars**	**12 mm**
SUMMARY	**Number of bars**	**22**
	arranged in a single layer	
	Cover to all steel	**30 mm**
	Area of steel required	**2417.8 mm²**
	Area of steel provided	**2488.1 mm²**
	Percentage provided	**1.6423 %**
	Weight of steel provided	**19.532 kg/m**
	Maximum clear spacing	**148 mm**
	Link size assumed	**10 mm**

COMPRESSION	**Characteristic strength**	**425 N/mm²**
REINFORCEMENT	**Diameter of bars**	**12 mm**
SUMMARY	**Number of bars**	**28**
	arranged in a single layer	
	Cover to all steel	**30 mm**
	Area of steel required	**3158.9 mm²**
	Area of steel provided	**3166.7 mm²**
	Percentage provided	**2.0902 %**
	Weight of steel provided	**24.859 kg/m**
	Minimum poss.link size	**6 mm**
	Maximum spacing of links	**144 mm**

Location: Large beam - mild steel - no compression steel

Bending in rectangular beams

Calculations are in accordance with Clause 3.4.4.4 of BS8110: Part 1 and thus assume the use of a simplified rectangular concrete stress-block and that the depth to the neutral axis is restricted to 0.5*d.

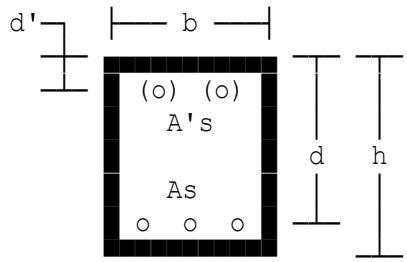

Design to BS8110(1997) with partial safety factor for steel gammaS=1.15
Moment before redistribution Mbef=5000 kNm
Beam being analysed is considered as continuous.
Design moment (after redistrib.) M=5000 kNm
Characteristic concrete strength fcu=50 N/mm²
Max.aggregate size (for bar spc.) hagg=15 mm
Char.strength of long'l bars fy=250 N/mm²
Longitudinal reinforcement is mild steel.
Diameter of tension bars dia=40 mm
Diameter of link legs dial=16 mm
Designated exposure class is XC3
Specified fixing tolerance tol=10 mm
Nominal concrete cover cover=50 mm
Overall depth of section h=1000 mm
Effective depth of section d=914 mm
Breadth of section b=1000 mm

Longitudinal reinforcement

TENSION	**Characteristic strength**	**250 N/mm²**
REINFORCEMENT	**Diameter of bars**	**40 mm**
SUMMARY	**Number of bars**	**24**
	arranged in 3 layers	
	Cover to all steel	**50 mm**
	Area of steel required	**29816 mm²**
	Area of steel provided	**30159 mm²**
	Percentage provided	**2.9861 %**
	Weight of steel provided	**236.75 kg/m**
	Maximum clear spacing	**285 mm**
	Link size assumed	**16 mm**

WARNING:
As more than 1 layer of tension bars required, you should determine a revised effective depth corresponding to the position of the centroid of this reinforcement, and rerun this proforma.

Location: Ex1 - Beam with compression reinforcement

Bending in rectangular beams

Calculations are in accordance with EC2: Design of concrete structures and assume the use of a simplified rectangular concrete stress-block and that the depth to the neutral axis is restricted to 0.45*d.

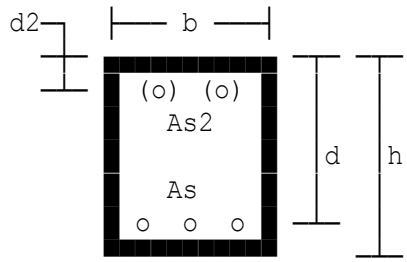

Moment before redistribution	Mbef=150 kNm
Beam being analysed is considered	as non-continuous.
Char yield strength of reinf'ment	fyk=500 N/mm²
Max.aggregate size (for bar spc.)	hagg=20 mm
Diameter of tension bars	dia=25 mm
Diameter of link legs	dial=8 mm
Diameter of compression bars	diac=12 mm
Depth to compression steel	d2=45 mm

DESIGN	**Overall depth**	**400 mm**
SUMMARY	**Effective depth**	**339 mm**
	Width of section	**250 mm**
FLEXURE	**Parameter K**	**0.174**
	Parameter K'	**0.1684**
	Lever arm ratio z/d	**0.8185**
TENSION REINFORCEMENT	**Steel area provided**	**1473 mm²**
	Diameter of bars	**25 mm**
	Number of bars	**3**
	Steel area required	**1241 mm²**
	Steel percentage req.	**1.464 %**
	Minimum area of steel	**127.6 mm²**
	Maximum area of steel	**4000 mm²**
COMPRESSION REINFORCEMENT	**Steel area provided**	**226.2 mm²**
	Diameter of bars	**12 mm**
	Number of bars	**2**
	Steel area required	**37.98 mm²**
	Minimum area required	**200 mm²**

Location: Ex2 - Redistribution example

Bending in rectangular beams

Calculations are in accordance with EC2: Design of concrete structures and assume the use of a simplified rectangular concrete stress-block and that the depth to the neutral axis is restricted to 0.45*d.

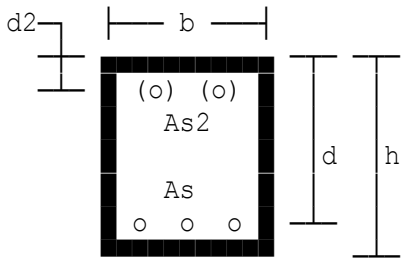

Moment before redistribution Mbef=460 kNm
Beam being analysed is considered as continuous.
Section considered has a hogging moment.
Design moment (after redistrib.) M=370 kNm
Char yield strength of reinf'ment fyk=500 N/mm²
Max.aggregate size (for bar spc.) hagg=20 mm
Diameter of tension bars dia=25 mm
Diameter of link legs dial=8 mm
Diameter of compression bars diac=20 mm
Depth to compression steel d2=100 mm

DESIGN	**Overall depth**	**600 mm**
SUMMARY	**Effective depth**	**525 mm**
	Width of section	**300 mm**
FLEXURE	**Parameter K**	**0.179**
	Parameter K'	**0.1547**
	Lever arm ratio z/d	**0.8369**
TENSION REINFORCEMENT	**Steel area provided**	**1963 mm²**
	Diameter of bars	**25 mm**
	Number of bars	**4**
	Steel area required	**1946 mm²**
	Steel percentage req.	**1.235 %**
	Minimum area of steel	**210.1 mm²**
	Maximum area of steel	**7200 mm²**
COMPRESSION REINFORCEMENT	**Steel area provided**	**628.3 mm²**
	Diameter of bars	**20 mm**
	Number of bars	**2**
	Steel area required	**316.1 mm²**
	Minimum area required	**360 mm²**

Location: Ex3 - Shallow beam

Bending in rectangular beams

Calculations are in accordance with EC2: Design of concrete structures and assume the use of a simplified rectangular concrete stress-block and that the depth to the neutral axis is restricted to 0.45*d.

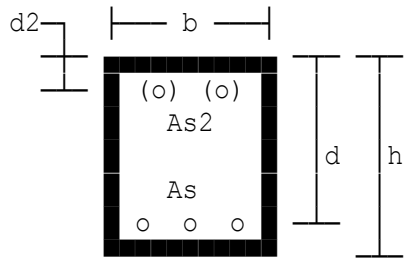

Moment before redistribution Mbef=425 kNm
Beam being analysed is considered as continuous.
Section considered has a sagging moment.
Char yield strength of reinf'ment fyk=500 N/mm²
Max.aggregate size (for bar spc.) hagg=20 mm
Diameter of tension bars dia=25 mm
Diameter of link legs dial=8 mm
Diameter of compression bars diac=16 mm
Depth to compression steel d2=50 mm

DESIGN	**Overall depth**	**400 mm**
SUMMARY	**Effective depth**	**339 mm**
	Width of section	**600 mm**
FLEXURE	**Parameter K**	**0.1761**
	Parameter K'	**0.1684**
	Lever arm ratio z/d	**0.8185**
TENSION REINFORCEMENT	**Steel area provided**	**3927 mm²**
	Diameter of bars	**25 mm**
	Number of bars	**8**
	Steel area required	**3517 mm²**
	Steel percentage req.	**1.729 %**
	Minimum area of steel	**339.5 mm²**
	Maximum area of steel	**9600 mm²**
COMPRESSION REINFORCEMENT	**Steel area provided**	**603.2 mm²**
	Diameter of bars	**16 mm**
	Number of bars	**3**
	Steel area required	**148 mm²**
	Minimum area required	**480 mm²**

Location: Ex4 - Minimum arrangement

Bending in rectangular beams

Calculations are in accordance with EC2: Design of concrete structures and assume the use of a simplified rectangular concrete stress-block and that the depth to the neutral axis is restricted to 0.45*d.

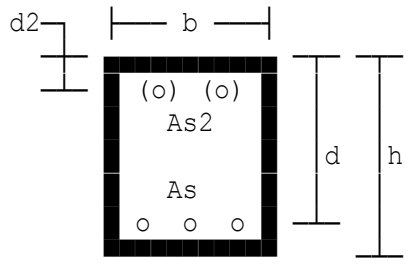

Moment before redistribution Mbef=12 kNm
Beam being analysed is considered as continuous.
Section considered has a sagging moment.
Char yield strength of reinf'ment fyk=500 N/mm²
Max.aggregate size (for bar spc.) hagg=20 mm
Diameter of tension bars dia=12 mm
Diameter of link legs dial=8 mm

DESIGN	**Overall depth**	**400 mm**
SUMMARY	**Effective depth**	**345 mm**
	Width of section	**200 mm**
FLEXURE	**Parameter K**	**0.0202**
	Parameter K'	**0.1684**
	Lever arm ratio z/d	**0.95**
TENSION REINFORCEMENT	**Steel area required**	**92.03 mm²**
	Steel area provided	**226.2 mm²**
	Diameter of bars	**12 mm**
	Number of bars	**2**
	Steel percentage req.	**0.1334 %**
	Minimum area of steel	**92.03 mm²**
	Maximum area of steel	**3200 mm²**

Copyright 1986-2024 Fitzroy Systems Ltd.

Location: Small beam - high-yield steel - no compression steel

Bending in rectangular beams with optional calculations for shear, lap lengths, bar curtailment & limiting span/effective depth ratio

Calculations are in accordance with Clause 3.4.4.4 of BS8110: Part 1 and thus assume the use of a simplified rectangular concrete stress-block and that the depth to the neutral axis is restricted to 0.5*d.

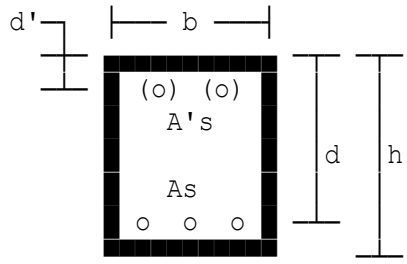

Design to BS8110(1997) with partial safety factor for steel gammaS=1.15
Ultimate BM before redistribution Mbef=12 kNm
Beam being analysed is considered as non-continuous.
Characteristic concrete strength fcu=35 N/mm²
Max.aggregate size (for bar spc) hagg=15 mm
Char.strength of long'l bars fy=500 N/mm²
Longitudinal reinforcement is high-yield steel.
Diameter of tension bars dia=10 mm
Diameter of link legs dial=8 mm
Char.strength of link steel fyv=500 N/mm²
High-yield steel shear reinforcement.
Designated exposure class is XC1
Specified fixing tolerance tol=10 mm
Nominal concrete cover cover=25 mm
Overall depth of section h=275 mm
Effective depth of section d=237 mm
Breadth of section b=200 mm

Longitudinal reinforcement

TENSION	**Characteristic strength**	**500 N/mm²**
REINFORCEMENT	**Diameter of bars**	**10 mm**
SUMMARY	**Number of bars**	**2**
	arranged in a single layer.	
	Cover to all steel	**25 mm**
	Area of steel required	**122.58 mm²**
	Area of steel provided	**157.08 mm²**
	Percentage provided	**0.2856 %**
	Weight of steel provided	**1.2331 kg/m**
	Max.permissible spacing	**180 mm**
	Link size assumed	**8 mm**

Check on span/effective depth ratio

Basic ratio for simp.-sup.beam	bs'd=20 see Table 3.9
As applied-moment factor	M'bd2=M*1000*1000/(b*d^2)=1.0682 N/mm²
Mod.factor for tension steel from equation 7 (Table 3.10)	modf1=0.55+(477-fs)/(120*(.9+M'bd2)) =1.4682
Mod.factor for no comp.steel	modf2=1
Maximum permissible span/effective-depth ratio	ps'd=bs'd*modf1*modf2=29.364
Span of beam (see Cls.3.4.1.2-4)	span=5 m
Actual span/effective-depth ratio	as'd=1000*span/d=21.097
As this does not exceed	29.364, this is Acceptable.

Bending-moment capacities at steel curtailment points

As there are only two bars in tension, no curtailment is possible.

Anchorage and lap lengths - Clause 3.12.8 of BS8110: Part 1

Type 2 deformed bars: bond coefficient beta=0.50 (Table 3.26)
Tension reinforcement:

Force in tension bar at yield	Ft=fy/gammaS*PI*dia^2/4=34148 N
Ultimate anchorage bond stress	fbu=beta*SQR(fcu)=2.958 N/mm²
Anchorage and tension lap length	lap=Ft/(PI*dia*fbu)=367.46 mm
	=370 mm (rounded)
1.4 * tension lap length	=520 mm (rounded)
2 * tension lap length	=740 mm (rounded)

Shear reinforcement

Shear calculations are in accordance with Clauses 3.4.5 of Code

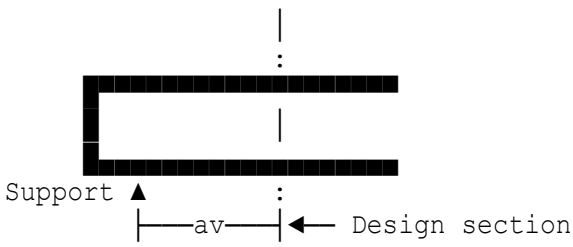

Location for shear calculation:	0.25 m from support
Effective breadth for shear	bv=200 mm
Shear force due to ultimate load	V=100 kN
Distance from support	av=250 mm
No.of tension bars effective at section	nbars=2
Number of legs to be provided	nlegs=2
Chosen link spacing	sv'=140 mm

Use 8 mm links (two legs), spaced at 140 mm centres along beam.

SHEAR REINFORCEMENT SUMMARY	**Characteristic strength**	**500 N/mm²**
	Diameter of links	**8 mm**
	Number of legs	**2**
	Spacing	**140 mm**
	Approx.weight of links	**2.1588 kg/m**

Copyright 1986-2024 Fitzroy Systems Ltd.

Location: Small beam - high-yield steel - no compression steel

Bending in rectangular beams with optional calculations for shear, lap lengths, bar curtailment & limiting span/effective depth ratio

Calculations are in accordance with Clause 3.4.4.4 of BS8110: Part 1 and thus assume the use of a simplified rectangular concrete stress-block and that the depth to the neutral axis is restricted to 0.5*d.

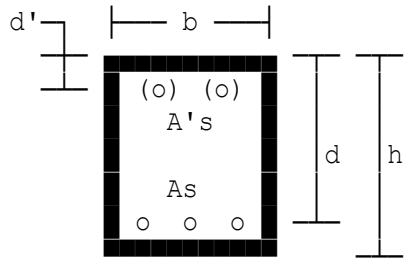

Design to BS8110(1997) with partial safety factor for steel gammaS=1.15
Ultimate BM before redistribution Mbef=12 kNm
Beam being analysed is considered as non-continuous.
Characteristic concrete strength fcu=35 N/mm²
Max.aggregate size (for bar spc) hagg=15 mm
Char.strength of long'l bars fy=500 N/mm²
Longitudinal reinforcement is high-yield steel.
Diameter of tension bars dia=10 mm
Diameter of link legs dial=8 mm
Char.strength of link steel fyv=500 N/mm²
High-yield steel shear reinforcement.
Designated exposure class is XC1
Specified fixing tolerance tol=10 mm
Nominal concrete cover cover=25 mm
Overall depth of section h=275 mm
Effective depth of section d=237 mm
Breadth of section b=200 mm

Longitudinal reinforcement

TENSION	**Characteristic strength**	**500 N/mm²**
REINFORCEMENT	**Diameter of bars**	**10 mm**
SUMMARY	**Number of bars**	**2**
	arranged in a single layer.	
	Cover to all steel	**25 mm**
	Area of steel required	**122.58 mm²**
	Area of steel provided	**157.08 mm²**
	Percentage provided	**0.2856 %**
	Weight of steel provided	**1.2331 kg/m**
	Max.permissible spacing	**180 mm**
	Link size assumed	**8 mm**

Check on span/effective depth ratio

```
Basic ratio for simp.-sup.beam    bs'd=20  see Table 3.9
As applied-moment factor          M'bd2=M*1000*1000/(b*d^2)=1.0682 N/mm²
Mod.factor for tension steel from
equation 7 (Table 3.10)           modf1=0.55+(477-fs)/(120*(.9+M'bd2))
                                       =1.4682
Mod.factor for no comp.steel      modf2=1
Maximum permissible
span/effective-depth ratio        ps'd=bs'd*modf1*modf2=29.364
Span of beam (see Cls.3.4.1.2-4)  span=5 m
Actual span/effective-depth ratio as'd=1000*span/d=21.097
As this does not exceed                29.364,  this is Acceptable.
```

Bending-moment capacities at steel curtailment points

As there are only two bars in tension, no curtailment is possible.

Anchorage and lap lengths - Clause 3.12.8 of BS8110: Part 1

```
Type 2 deformed bars: bond coefficient beta=0.50 (Table 3.26)
Tension reinforcement:
Force in tension bar at yield     Ft=fy/gammaS*PI*dia^2/4=34148 N
Ultimate anchorage bond stress    fbu=beta*SQR(fcu)=2.958 N/mm²
Anchorage and tension lap length  lap=Ft/(PI*dia*fbu)=367.46 mm
                                     =370 mm (rounded)
1.4 * tension lap length             =520 mm (rounded)
2 * tension lap length               =740 mm (rounded)
```

Shear reinforcement

Shear calculations are in accordance with Clauses 3.4.5 of Code

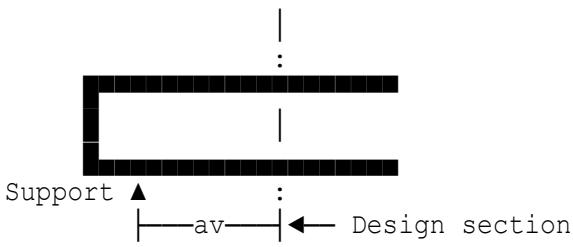


```
Location for shear calculation:   0.25 m from support
Effective breadth for shear       bv=200 mm
Shear force due to ultimate load  V=100 kN
Distance from support             av=250 mm
No.of tension bars effective at section nbars=2
Number of legs to be provided     nlegs=2
Chosen link spacing               sv'=140 mm
```

Use 8 mm links (two legs), spaced at 140 mm centres along beam.

SHEAR	**Characteristic strength**	**500 N/mm²**
REINFORCEMENT	**Diameter of links**	**8 mm**
SUMMARY	**Number of legs**	**2**
	Spacing	**140 mm**
	Approx.weight of links	**2.1588 kg/m**

Copyright 1986-2024 Fitzroy Systems Ltd.

Location: Small beam - high-yield steel - no compression steel

Bending in rectangular beams with optional calculations for shear, lap lengths, bar curtailment & limiting span/effective depth ratio

Calculations are in accordance with Clause 3.4.4.4 of BS8110: Part 1 and thus assume the use of a simplified rectangular concrete stress-block and that the depth to the neutral axis is restricted to 0.5*d.

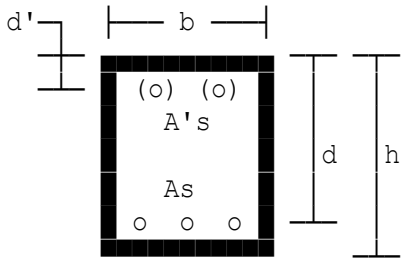

Design to BS8110(1997) with partial safety factor for steel gammaS=1.15
Ultimate BM before redistribution Mbef=12 kNm
Beam being analysed is considered as non-continuous.
Characteristic concrete strength fcu=35 N/mm²
Max.aggregate size (for bar spc) hagg=15 mm
Char.strength of long'l bars fy=500 N/mm²
Longitudinal reinforcement is high-yield steel.
Diameter of tension bars dia=10 mm
Diameter of link legs dial=8 mm
Char.strength of link steel fyv=500 N/mm²
High-yield steel shear reinforcement.
Designated exposure class is XC1
Specified fixing tolerance tol=10 mm
Nominal concrete cover cover=25 mm
Overall depth of section h=275 mm
Effective depth of section d=237 mm
Breadth of section b=200 mm

Longitudinal reinforcement

TENSION	**Characteristic strength**	**500 N/mm²**
REINFORCEMENT	**Diameter of bars**	**10 mm**
SUMMARY	**Number of bars**	**2**
	arranged in a single layer.	
	Cover to all steel	**25 mm**
	Area of steel required	**122.58 mm²**
	Area of steel provided	**157.08 mm²**
	Percentage provided	**0.2856 %**
	Weight of steel provided	**1.2331 kg/m**
	Max.permissible spacing	**180 mm**
	Link size assumed	**8 mm**

Check on span/effective depth ratio

Basic ratio for simp.-sup.beam	bs'd=20 see Table 3.9
As applied-moment factor	M'bd2=M*1000*1000/(b*d^2)=1.0682 N/mm²
Mod.factor for tension steel from equation 7 (Table 3.10)	modf1=0.55+(477-fs)/(120*(.9+M'bd2)) =1.4682
Mod.factor for no comp.steel	modf2=1
Maximum permissible span/effective-depth ratio	ps'd=bs'd*modf1*modf2=29.364
Span of beam (see Cls.3.4.1.2-4)	span=5 m
Actual span/effective-depth ratio	as'd=1000*span/d=21.097
As this does not exceed	29.364, this is Acceptable.

Bending-moment capacities at steel curtailment points

As there are only two bars in tension, no curtailment is possible.

Anchorage and lap lengths - Clause 3.12.8 of BS8110: Part 1

Type 2 deformed bars: bond coefficient beta=0.50 (Table 3.26)
Tension reinforcement:

Force in tension bar at yield	Ft=fy/gammaS*PI*dia^2/4=34148 N
Ultimate anchorage bond stress	fbu=beta*SQR(fcu)=2.958 N/mm²
Anchorage and tension lap length	lap=Ft/(PI*dia*fbu)=367.46 mm
	=370 mm (rounded)
1.4 * tension lap length	=520 mm (rounded)
2 * tension lap length	=740 mm (rounded)

Shear reinforcement

Shear calculations are in accordance with Clauses 3.4.5 of Code

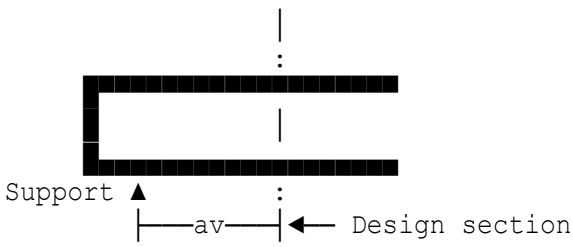

Location for shear calculation:	0.25 m from support
Effective breadth for shear	bv=200 mm
Shear force due to ultimate load	V=100 kN
Distance from support	av=250 mm
No.of tension bars effective at section	nbars=2
Number of legs to be provided	nlegs=2
Chosen link spacing	sv'=140 mm

Use 8 mm links (two legs), spaced at 140 mm centres along beam.

SHEAR REINFORCEMENT SUMMARY	**Characteristic strength**	**500 N/mm²**
	Diameter of links	**8 mm**
	Number of legs	**2**
	Spacing	**140 mm**
	Approx.weight of links	**2.1588 kg/m**

Copyright 1986-2024 Fitzroy Systems Ltd.

Location: Small beam - high-yield steel - no compression steel

Bending in rectangular beams with optional calculations for shear, lap lengths, bar curtailment & limiting span/effective depth ratio

Calculations are in accordance with Clause 3.4.4.4 of BS8110: Part 1 and thus assume the use of a simplified rectangular concrete stress-block and that the depth to the neutral axis is restricted to 0.5*d.

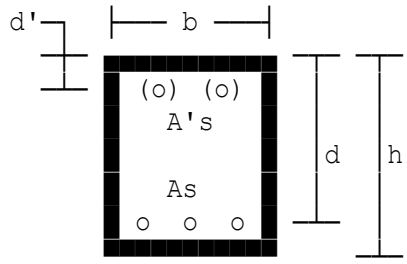

Design to BS8110(1997) with partial safety factor for steel gammaS=1.15
Ultimate BM before redistribution Mbef=12 kNm
Beam being analysed is considered as non-continuous.
Characteristic concrete strength fcu=35 N/mm²
Max.aggregate size (for bar spc) hagg=15 mm
Char.strength of long'l bars fy=500 N/mm²
Longitudinal reinforcement is high-yield steel.
Diameter of tension bars dia=10 mm
Diameter of link legs dial=8 mm
Char.strength of link steel fyv=500 N/mm²
High-yield steel shear reinforcement.
Designated exposure class is XC1
Specified fixing tolerance tol=10 mm
Nominal concrete cover cover=25 mm
Overall depth of section h=275 mm
Effective depth of section d=237 mm
Breadth of section b=200 mm

Longitudinal reinforcement

TENSION	**Characteristic strength**	**500 N/mm²**
REINFORCEMENT	**Diameter of bars**	**10 mm**
SUMMARY	**Number of bars**	**2**
	arranged in a single layer.	
	Cover to all steel	**25 mm**
	Area of steel required	**122.58 mm²**
	Area of steel provided	**157.08 mm²**
	Percentage provided	**0.2856 %**
	Weight of steel provided	**1.2331 kg/m**
	Max.permissible spacing	**180 mm**
	Link size assumed	**8 mm**

Check on span/effective depth ratio

```
Basic ratio for simp.-sup.beam    bs'd=20  see Table 3.9
As applied-moment factor          M'bd2=M*1000*1000/(b*d^2)=1.0682 N/mm²
Mod.factor for tension steel from
equation 7 (Table 3.10)           modf1=0.55+(477-fs)/(120*(.9+M'bd2))
                                       =1.4682
Mod.factor for no comp.steel      modf2=1
Maximum permissible
span/effective-depth ratio        ps'd=bs'd*modf1*modf2=29.364
Span of beam (see Cls.3.4.1.2-4)  span=5 m
Actual span/effective-depth ratio as'd=1000*span/d=21.097
As this does not exceed                29.364,  this is Acceptable.
```

Bending-moment capacities at steel curtailment points

As there are only two bars in tension, no curtailment is possible.

Anchorage and lap lengths - Clause 3.12.8 of BS8110: Part 1

```
Type 2 deformed bars: bond coefficient beta=0.50 (Table 3.26)
Tension reinforcement:
Force in tension bar at yield     Ft=fy/gammaS*PI*dia^2/4=34148 N
Ultimate anchorage bond stress    fbu=beta*SQR(fcu)=2.958 N/mm²
Anchorage and tension lap length  lap=Ft/(PI*dia*fbu)=367.46 mm
                                     =370 mm (rounded)
1.4 * tension lap length             =520 mm (rounded)
2 * tension lap length               =740 mm (rounded)
```

Shear reinforcement

Shear calculations are in accordance with Clauses 3.4.5 of Code

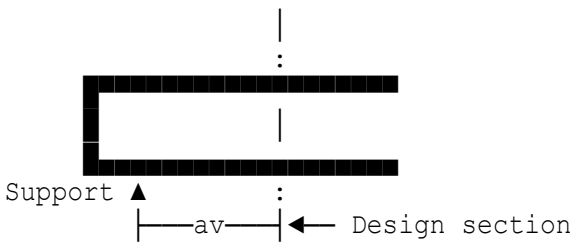


```
Location for shear calculation:   0.25 m from support
Effective breadth for shear       bv=200 mm
Shear force due to ultimate load  V=100 kN
Distance from support             av=250 mm
No.of tension bars effective at section nbars=2
Number of legs to be provided     nlegs=2
Chosen link spacing               sv'=140 mm
```

Use 8 mm links (two legs), spaced at 140 mm centres along beam.

SHEAR	**Characteristic strength**	**500 N/mm²**
REINFORCEMENT	**Diameter of links**	**8 mm**
SUMMARY	**Number of legs**	**2**
	Spacing	**140 mm**
	Approx.weight of links	**2.1588 kg/m**

Location: Ex1 - Beam with compression reinforcement

Bending in rectangular beams

Calculations are in accordance with EC2: Design of concrete structures and assume the use of a simplified rectangular concrete stress-block and that the depth to the neutral axis is restricted to 0.45*d.

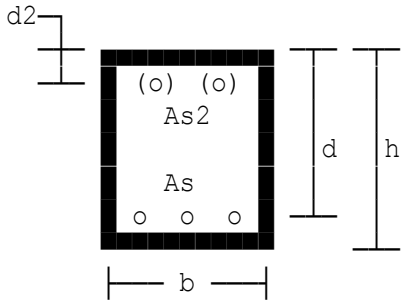

Design BM before redistribution Mbef=150 kNm
Beam being analysed is considered as non-continuous.
Char yield strength of r'ment fyk=500 N/mm²
Max.aggregate size (for bar spc.) hagg=20 mm
Diameter of tension bars dia=25 mm
Diameter of link legs dial=8 mm

Section properties

Diameter of compression bars diac=12 mm
Depth to compression steel d2=45 mm

DESIGN	**Overall depth**	**400 mm**
SUMMARY	**Effective depth**	**335 mm**
	Width of section	**250 mm**
FLEXURE	**Parameter K**	**0.1782**
	Parameter K'	**0.1684**
	Lever arm ratio z/d	**0.8185**
TENSION REINFORCEMENT	**Steel area provided**	**1473 mm²**
	Diameter of bars	**25 mm**
	Number of bars	**3**
	Steel area required	**1254 mm²**
	Steel percentage req.	**1.498 %**
	Minimum area of steel	**126.1 mm²**
	Maximum area of steel	**4000 mm²**
COMPRESSION REINFORCEMENT	**Steel area provided**	**226.2 mm²**
	Diameter of bars	**12 mm**
	Number of bars	**2**
	Steel area required	**65.51 mm²**
	Minimum area required	**200 mm²**

Deflection check

Effective span of beam L=5.4 m
Actual span to depth ratio l'd=L*1000/d=16.12
Allowable span/depth ratio l'da=k*N*F1*F2*F3=16.84

DESIGN	**Actual l/d ratio**	**16.12**
SUMMARY	**Basic l/d ratio**	**14.34**
DEFLECTION	**Span factor**	**1**
	Flange beam factor F1	**1**
	Long spans factor F2	**1**
	Steel stress factor F3	**1.174**
	Allowable l/d ratio	**16.84**

Shear check

Location for shear calculation:	At simple support
Shear force due to ultimate load	VEd=110 kN
Design shear stress	vEd=VEd*10^3/(0.9*bw*d)=1.459 N/mm²
Concrete strut capacity	vRdm=0.124*fck*(1-fck/250)=3.274 N/mm²
Angle of inclination of strut	theta'=22°
Number of shear legs	nsl=2
Chosen spacing	s=250 mm

SHEAR SUMMARY	**Design shear force**	**110 kN**
	Design shear stress	**1.459 N/mm²**
	Concrete strut capacity	**3.274 N/mm²**
	Area/spacing ratio	**0.3357**
	Diameter of links	**8 mm**
	Area of links	**100 mm²**
	Maximum spacing (based on 0.75d)	**251.3 mm**
	Actual spacing	**250 mm**

Location: Ex2 - Redistribution example

Bending in rectangular beams

Calculations are in accordance with EC2: Design of concrete structures and assume the use of a simplified rectangular concrete stress-block and that the depth to the neutral axis is restricted to 0.45*d.

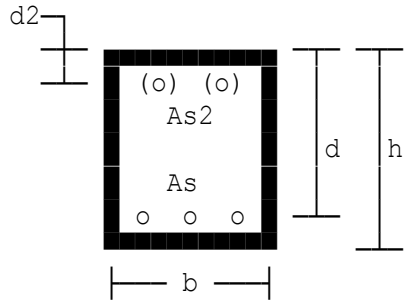

Design BM before redistribution Mbef=460 kNm
Beam being analysed is considered as continuous.
Section considered has a hogging moment.
Design moment (after redistrib.) M=370 kNm
Char yield strength of r'ment fyk=500 N/mm²
Max.aggregate size (for bar spc.) hagg=20 mm
Diameter of tension bars dia=25 mm
Diameter of link legs dial=8 mm

Section properties

Diameter of compression bars diac=20 mm
Depth to compression steel d2=100 mm

DESIGN SUMMARY	**Overall depth**	**600 mm**
	Effective depth	**525 mm**
	Width of section	**300 mm**
FLEXURE	**Parameter K**	**0.179**
	Parameter K'	**0.1547**
	Lever arm ratio z/d	**0.8369**
TENSION REINFORCEMENT	**Steel area provided**	**1963 mm²**
	Diameter of bars	**25 mm**
	Number of bars	**4**
	Steel area required	**1946 mm²**
	Steel percentage req.	**1.235 %**
	Minimum area of steel	**210.1 mm²**
	Maximum area of steel	**7200 mm²**
COMPRESSION REINFORCEMENT	**Steel area provided**	**628.3 mm²**
	Diameter of bars	**20 mm**
	Number of bars	**2**
	Steel area required	**316.1 mm²**
	Minimum area required	**360 mm²**

Shear check

Location for shear calculation: 500mm from support
Shear force due to ultimate load VEd=278 kN
Design shear stress vEd=VEd*10^3/(0.9*bw*d)=1.961 N/mm²

Concrete strut capacity	vRdm=0.124*fck*(1-fck/250)=2.79 N/mm²
Angle of inclination of strut	theta'=22°
Number of shear legs	nsl=2
Chosen spacing	s=175 mm

SHEAR SUMMARY

Design shear force	**278 kN**
Design shear stress	**1.961 N/mm²**
Concrete strut capacity	**2.79 N/mm²**
Area/spacing ratio	**0.5413**
Diameter of links	**8 mm**
Area of links	**100 mm²**
Maximum spacing	**185 mm**
Actual spacing	**175 mm**

Location: Ex3 - Shallow beam

Bending in rectangular beams

Calculations are in accordance with EC2: Design of concrete structures and assume the use of a simplified rectangular concrete stress-block and that the depth to the neutral axis is restricted to 0.45*d.

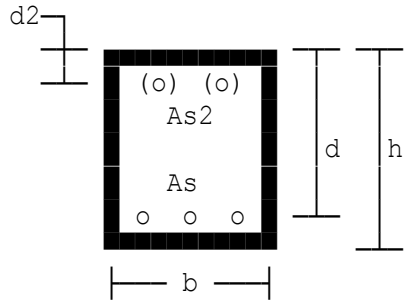

Design BM before redistribution Mbef=425 kNm
Beam being analysed is considered as continuous.
Section considered has a sagging moment.
Char yield strength of r'ment fyk=500 N/mm²
Max.aggregate size (for bar spc.) hagg=20 mm
Diameter of tension bars dia=25 mm
Diameter of link legs dial=8 mm

Section properties

Diameter of compression bars diac=16 mm
Depth to compression steel d2=50 mm

DESIGN	**Overall depth**	**400 mm**
SUMMARY	**Effective depth**	**335 mm**
	Width of section	**600 mm**
FLEXURE	**Parameter K**	**0.1803**
	Parameter K'	**0.1684**
	Lever arm ratio z/d	**0.8185**
TENSION REINFORCEMENT	**Steel area provided**	**3927 mm²**
	Diameter of bars	**25 mm**
	Number of bars	**8**
	Steel area required	**3556 mm²**
	Steel percentage req.	**1.769 %**
	Minimum area of steel	**335.5 mm²**
	Maximum area of steel	**9600 mm²**
COMPRESSION REINFORCEMENT	**Steel area provided**	**603.2 mm²**
	Diameter of bars	**16 mm**
	Number of bars	**3**
	Steel area required	**227 mm²**
	Minimum area required	**480 mm²**

Deflection check

Effective span of beam L=5.2 m
Actual span to depth ratio l'd=L*1000/d=15.52
Allowable span/depth ratio l'da=k*N*F1*F2*F3=20.65

DESIGN	**Actual l/d ratio**	**15.52**
SUMMARY	**Basic l/d ratio**	**14.39**
DEFLECTION	**Span factor**	**1.3**
	Flange beam factor F1	**1**
	Long spans factor F2	**1**
	Steel stress factor F3	**1.104**
	Allowable l/d ratio	**20.65**

Shear check

Location for shear calculation:	500mm from support
Shear force due to ultimate load	VEd=278 kN
Design shear stress	vEd=VEd*10^3/(0.9*bw*d)=1.537 N/mm²
Concrete strut capacity	vRdm=0.124*fck*(1-fck/250)=3.732 N/mm²
Angle of inclination of strut	theta'=22°
Number of shear legs	nsl=4
Chosen spacing	s=225 mm

SHEAR SUMMARY	**Design shear force**	**278 kN**
	Design shear stress	**1.537 N/mm²**
	Concrete strut capacity	**3.732 N/mm²**
	Area/spacing ratio	**0.8483**
	Diameter of links	**8 mm**
	Area of links	**201 mm²**
	Maximum spacing	**237 mm**
	Actual spacing	**225 mm**

Copyright 1986-2024 Fitzroy Systems Ltd.

Location: Ex4 - Minimum arrangement

Bending in rectangular beams

Calculations are in accordance with EC2: Design of concrete structures and assume the use of a simplified rectangular concrete stress-block and that the depth to the neutral axis is restricted to 0.45*d.

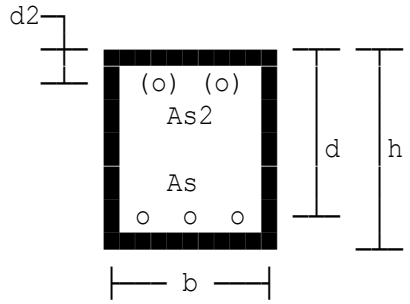

Design BM before redistribution Mbef=12 kNm
Beam being analysed is considered as continuous.
Section considered has a sagging moment.
Char yield strength of r'ment fyk=500 N/mm²
Max.aggregate size (for bar spc.) hagg=20 mm
Diameter of tension bars dia=12 mm
Diameter of link legs dial=8 mm

Section properties

DESIGN	**Overall depth**	**400 mm**
SUMMARY	**Effective depth**	**345 mm**
	Width of section	**200 mm**
FLEXURE	**Parameter K**	**0.0202**
	Parameter K'	**0.1684**
	Lever arm ratio z/d	**0.95**
TENSION REINFORCEMENT	**Steel area required**	**92.03 mm²**
	Steel area provided	**226.2 mm²**
	Diameter of bars	**12 mm**
	Number of bars	**2**
	Steel percentage req.	**0.1334 %**
	Minimum area of steel	**92.03 mm²**
	Maximum area of steel	**3200 mm²**

Deflection check

Effective span of beam L=3.4 m
Actual span to depth ratio l'd=L*1000/d=9.855
Allowable span/depth ratio l'da=k*N*F1*F2*F3=218.5
Absolute value of span/depth l'da=40*k=52

DESIGN	**Actual l/d ratio**	**9.855**
SUMMARY	**Basic l/d ratio**	**112**
DEFLECTION	**Span factor**	**1.3**
	Flange beam factor F1	**1**
	Long spans factor F2	**1**
	Steel stress factor F3	**1.5**
	Allowable l/d ratio	**52**

Copyright 1986-2024 Fitzroy Systems Ltd.

Shear check

Location for shear calculation:	300mm from support
Shear force due to ultimate load	VEd=27 kN
Design shear stress	vEd=VEd*10^3/(0.9*bw*d)=0.4348 N/mm²
Concrete strut capacity	vRdm=0.124*fck*(1-fck/250)=2.79 N/mm²
Angle of inclination of strut	theta'=22°
Number of shear legs	nsl=2
Chosen spacing	s=250 mm

SHEAR SUMMARY		
	Design shear force	**27 kN**
	Design shear stress	**0.4348 N/mm²**
	Concrete strut capacity	**2.79 N/mm²**
	Area/spacing ratio	**0.16**
	Diameter of links	**8 mm**
	Area of links	**100 mm²**
	Maximum spacing (based on 0.75d)	**258.8 mm**
	Actual spacing	**250 mm**

Location: Small beam - high-yield steel - no compression steel

Design of flanged beams to resist bending

Calculations are in accordance with Clause 3.4.4.4 of BS8110: Part 1 and thus assume the use of a simplified rectangular concrete stress-block and that the depth to the neutral axis is restricted to 0.5*d.

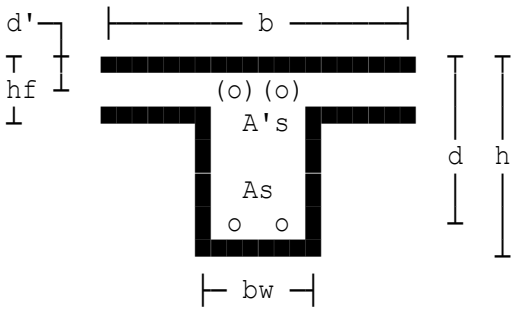

Design to BS8110(1997) with partial safety factor for steel gammaS=1.15
Moment before redistribution Mbef=12 kNm
Beam being analysed is considered as non-continuous.
Characteristic concrete strength fcu=35 N/mm²
Max.aggregate size (for bar spc.) hagg=15 mm
Char.strength of long'l bars fy=500 N/mm²
Longitudinal reinforcement is high-yield steel.
Diameter of tension bars dia=12 mm
Diameter of link legs dial=6 mm
Designated exposure class is XC1
Specified fixing tolerance tol=10 mm
Nominal concrete cover cover=25 mm
Overall depth of section h=275 mm
Effective depth of section d=238 mm
Breadth of flange b=400 mm
Breadth of rib bw=200 mm
Thickness of flange hf=100 mm

Longitudinal reinforcement

TENSION REINFORCEMENT SUMMARY	**Characteristic strength**	**500 N/mm²**
	Diameter of bars	**12 mm**
	Number of bars	**2**
	arranged in a single layer	
	Cover to all steel	**25 mm**
	Area of steel required	**122.07 mm²**
	Area of steel provided	**226.19 mm²**
	Percentage provided:	
	of gross section	**0.30159 %**
	of web area	**0.41126 %**
	Weight of steel provided	**1.7756 kg/m**
	Max.permissible spacing	**261 mm**
	Link size assumed	**6 mm**

Location: Narrow deep beam - mild steel - no compression steel

Design of flanged beams to resist bending

Calculations are in accordance with Clause 3.4.4.4 of BS8110: Part 1 and thus assume the use of a simplified rectangular concrete stress-block and that the depth to the neutral axis is restricted to 0.5*d.

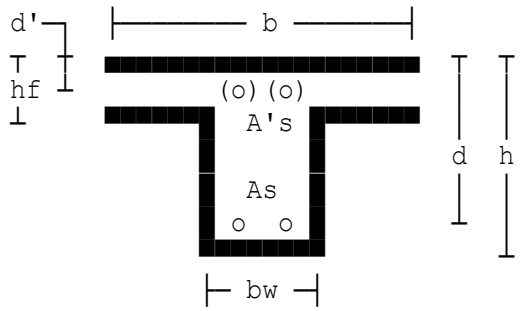

Design to BS8110(1997) with partial safety factor for steel gammaS=1.15
Moment before redistribution Mbef=1000 kNm
Beam being analysed is considered as continuous.
Design moment (after redistrib.) M=1000 kNm
Characteristic concrete strength fcu=30 N/mm²
Max.aggregate size (for bar spc.) hagg=15 mm
Char.strength of long'l bars fy=250 N/mm²
Longitudinal reinforcement is mild steel.
Diameter of tension bars dia=25 mm
Diameter of link legs dial=12 mm
Designated exposure class is XC2
Specified fixing tolerance tol=10 mm
Nominal concrete cover cover=35 mm
Overall depth of section h=950 mm
Effective depth of section d=800 mm
Breadth of flange b=1500 mm
Breadth of rib bw=300 mm
Thickness of flange hf=150 mm

Longitudinal reinforcement

TENSION	**Characteristic strength**	**250 N/mm²**
REINFORCEMENT	**Diameter of bars**	**25 mm**
SUMMARY	**Number of bars**	**13**
	arranged in 4 layers	
	Cover to all steel	**35 mm**
	Area of steel required	**6052.6 mm²**
	Area of steel provided	**6381.4 mm²**
	Percentage provided:	
	of gross section	**1.3723 %**
	of web area	**2.2391 %**
	Weight of steel provided	**50.094 kg/m**
	Max.permissible spacing	**297 mm**
	Link size assumed	**12 mm**

As overall depth h exceeds 750 mm, bars to control cracking must be provided on side faces of beam (refer to Code Clause 3.12.5.4 and 3.12.11.2.9).

Location: Shallow beam - square twist - with compression steel

Design of flanged beams to resist bending

Calculations are in accordance with Clause 3.4.4.4 of BS8110: Part 1 and thus assume the use of a simplified rectangular concrete stress-block and that the depth to the neutral axis is restricted to 0.5*d.

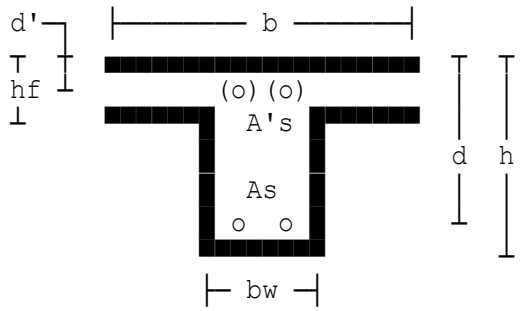

Design to BS8110(1997) with partial safety factor for steel gammaS=1.15
Moment before redistribution Mbef=95 kNm
Beam being analysed is considered as continuous.
Design moment (after redistrib.) M=76 kNm
Characteristic concrete strength fcu=35 N/mm²
Max.aggregate size (for bar spc.) hagg=15 mm
Char.strength of long'l bars fy=425 N/mm²
Steel strength other than those given in Table 3.1 of BS8110.
Min.percentage when bw/b>=0.4 permn1=0.16 %
Min.percentage when bw/b<0.4 permn2=0.22 %
Diameter of tension bars dia=20 mm
Diameter of link legs dial=8 mm
Nominal concrete cover cover=30 mm
Overall depth of section h=175 mm
Effective depth of section d=127 mm
Breadth of flange b=1000 mm
Breadth of rib bw=300 mm
Thickness of flange hf=75 mm

Longitudinal reinforcement

Depth to compression bars d'=44 mm

TENSION	**Characteristic strength**	**425 N/mm²**
REINFORCEMENT	**Diameter of bars**	**20 mm**
SUMMARY	**Number of bars**	**7**
	arranged in 2 layers	
	Cover to all steel	**30 mm**
	Area of steel required	**1981.1 mm²**
	Area of steel provided	**2199.1 mm²**
	Percentage provided:	
	of gross section	**2.0944 %**
	of web area	**4.1888 %**
	Weight of steel provided	**17.263 kg/m**
	Max.permissible spacing	**147 mm**
	Link size assumed	**8 mm**

COMPRESSION	**Characteristic strength**	**425 N/mm²**
REINFORCEMENT	**Diameter of bars**	**12 mm**
SUMMARY	**Number of bars**	**3**
	arranged in a single layer	
	Cover to all steel	**30 mm**
	Area of steel required	**300 mm²**
	Area of steel provided	**339.29 mm²**
	Percentage provided:	
	of gross section	**0.32314 %**
	of web area	**0.64627 %**
	of flange area	**0.45239 %**
	Weight of steel provided	**2.6634 kg/m**
	Minimum poss.link size	**6 mm**
	Maximum spacing of links	**144 mm**

WARNING:
As more than 1 layer of tension bars required, you should determine a revised effective depth corresponding to the position of the centroid of this reinforcement, and rerun this proforma.

Location: Large beam - high-yield steel - with compression steel

Design of flanged beams to resist bending

Calculations are in accordance with Clause 3.4.4.4 of BS8110: Part 1 and thus assume the use of a simplified rectangular concrete stress-block and that the depth to the neutral axis is restricted to 0.5*d.

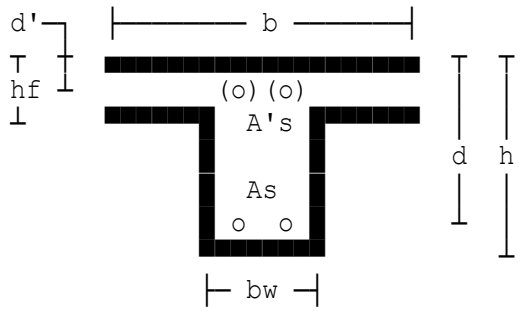

Design to BS8110(1997) with partial safety factor for steel gammaS=1.15
Moment before redistribution Mbef=9567 kNm
Beam being analysed is considered as continuous.
Design moment (after redistrib.) M=9345 kNm
Characteristic concrete strength fcu=50 N/mm²
Max.aggregate size (for bar spc.) hagg=15 mm
Char.strength of long'l bars fy=500 N/mm²
Longitudinal reinforcement is high-yield steel.
Diameter of tension bars dia=40 mm
Diameter of link legs dial=12 mm
Designated exposure class is XC3
Specified fixing tolerance tol=10 mm
Nominal concrete cover cover=50 mm
Overall depth of section h=1000 mm
Effective depth of section d=918 mm
Breadth of flange b=2000 mm
Breadth of rib bw=500 mm
Thickness of flange hf=175 mm

Longitudinal reinforcement

Diameter of compression bars diac=20 mm
Depth to compression bars d'=72 mm

TENSION	**Characteristic strength**	**500 N/mm²**
REINFORCEMENT	**Diameter of bars**	**40 mm**
SUMMARY	**Number of bars**	**22**
	arranged in 6 layers	
	Cover to all steel	**50 mm**
	Area of steel required	**27319 mm²**
	Area of steel provided	**27646 mm²**
	Percentage provided:	
	of gross section	**3.6257 %**
	of web area	**5.5292 %**
	Weight of steel provided	**217.02 kg/m**
	Max.permissible spacing	**139 mm**
	Link size assumed	**12 mm**

COMPRESSION	**Characteristic strength**	**500 N/mm²**
REINFORCEMENT	**Diameter of bars**	**20 mm**
SUMMARY	**Number of bars**	**10**
	arranged in a single layer	
	Cover to all steel	**50 mm**
	Area of steel required	**3135.3 mm²**
	Area of steel provided	**3141.6 mm²**
	Percentage provided:	
	of gross section	**0.41201 %**
	of web area	**0.62832 %**
	of flange area	**0.8976 %**
	Weight of steel provided	**24.662 kg/m**
	Minimum poss.link size	**6 mm**
	Maximum spacing of links	**240 mm**

WARNING:
As more than 1 layer of tension bars required, you should determine a revised effective depth corresponding to the position of the centroid of this reinforcement, and rerun this proforma.

Location: Concrete Centre worked example for edge beams

Design of flanged beams to resist bending

Calculations are in accordance with Clause 3.4.4.4 of BS8110: Part 1 and thus assume the use of a simplified rectangular concrete stress-block and that the depth to the neutral axis is restricted to 0.5*d.

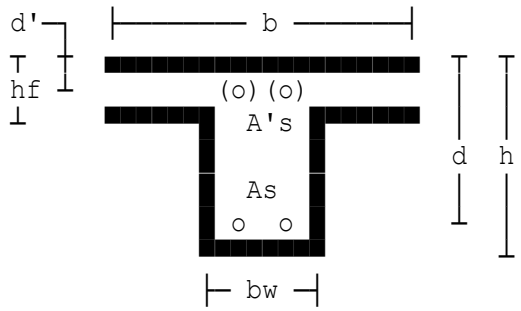

Design to BS8110(1997) with partial safety factor for steel gammaS=1.15
Moment before redistribution Mbef=1148 kNm
Beam being analysed is considered as continuous.
Design moment (after redistrib.) M=1148 kNm
Characteristic concrete strength fcu=30 N/mm²
Max.aggregate size (for bar spc.) hagg=15 mm
Char.strength of long'l bars fy=500 N/mm²
Longitudinal reinforcement is high-yield steel.
Diameter of tension bars dia=32 mm
Diameter of link legs dial=8 mm
Designated exposure class is XC1
Specified fixing tolerance tol=10 mm
Nominal concrete cover cover=25 mm
Overall depth of section h=750 mm
Effective depth of section d=668 mm
Breadth of flange b=1780 mm
Breadth of rib bw=350 mm
Thickness of flange hf=300 mm

Longitudinal reinforcement

TENSION REINFORCEMENT SUMMARY	**Characteristic strength**	**500 N/mm²**
	Diameter of bars	**32 mm**
	Number of bars	**6**
	arranged in 2 layers	
	Cover to all steel	**25 mm**
	Area of steel required	**4190.5 mm²**
	Area of steel provided	**4825.5 mm²**
	Percentage provided:	
	of gross section	**0.69783 %**
	of web area	**1.8383 %**
	Weight of steel provided	**37.88 kg/m**
	Max.permissible spacing	**162 mm**
	Link size assumed	**8 mm**

Location: Ex1 - Continuous T-beam

Bending in flanged beams

Calculations are in accordance with EC2: Design of concrete structures and assume the use of a simplified rectangular concrete stress-block and that the depth to the neutral axis is restricted to 0.45*d.

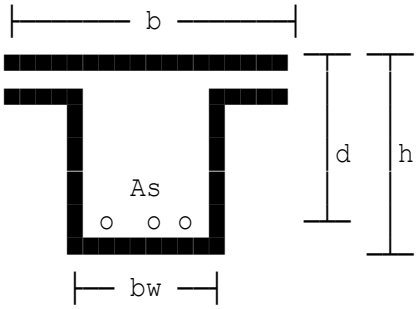

Distance between beam supports L=8.2 m
Moment before redistribution Mbef=600 kNm
Beam being analysed is considered as continuous.
Section considered has a sagging moment.
Overall depth of section h=650 mm
Average web width bw=350 mm
Flange thickness hf=200 mm
Char yield strength of r'ment fyk=500 N/mm²
Max.aggregate size (for bar spc.) hagg=20 mm
Diameter of tension bars dia=25 mm
Diameter of link legs dial=10 mm
Section being considered is a T-beam.

DESIGN	**Overall depth**	**650 mm**
SUMMARY	**Effective depth**	**560 mm**
	Flange width	**2194 mm**
	Web width	**350 mm**
FLEXURE	**Parameter K**	**0.0291**
	Parameter K'	**0.1684**
	Lever arm ratio z/d	**0.95**
TENSION REINFORCEMENT	**Steel area required**	**2594 mm²**
	Steel area provided	**2945 mm²**
	Diameter of bars	**25 mm**
	Number of bars	**6**
	Steel percentage req.	**0.2111 %**
	Minimum area of steel	**295.2 mm²**
	Maximum area of steel	**57044 mm²**

Deflection

Actual span to depth ratio l'd=L*1000/d=14.64
Allowable span/depth ratio l'da=k*N*F1*F2*F3=68.14
Absolute value of span/depth l'da=40*k=52

DESIGN	**Actual l/d ratio**	**14.64**
SUMMARY	**Basic l/d ratio**	**67.6**
DEFLECTION	**Span factor**	**1.3**
	Flange beam factor F1	**0.8**
	Long spans factor F2	**0.8537**
	Steel stress factor F3	**1.135**
	Allowable l/d ratio	**52**

Shear check

Location for shear calculation:	400mm from support
Shear force due to ultimate load	VEd=267 kN
Design shear stress	vEd=VEd*10^3/(0.9*bw*d)=1.514 N/mm²
Concrete strut capacity	vRdm=0.124*fck*(1-fck/250)=3.274 N/mm²
Angle of inclination of strut	theta'=22°
Number of shear legs	nsl=4
Chosen spacing	s=250 mm

SHEAR SUMMARY		
	Design shear force	**267 kN**
	Design shear stress	**1.514 N/mm²**
	Concrete strut capacity	**3.274 N/mm²**
	Area/spacing ratio	**0.4874**
	Diameter of links	**10 mm**
	Area of links	**314 mm²**
	Maximum spacing (based on 0.75d)	**420 mm**
	Actual spacing	**250 mm**

Location: Ex2 - Support condition

Bending in flanged beams

Calculations are in accordance with EC2: Design of concrete structures and assume the use of a simplified rectangular concrete stress-block and that the depth to the neutral axis is restricted to 0.45*d.

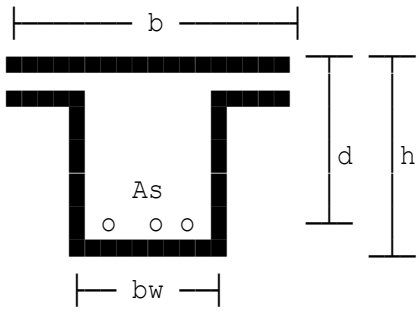

Distance between beam supports L=8.2 m
Moment before redistribution Mbef=650 kNm
Beam being analysed is considered as continuous.
Section considered has a hogging moment and will be designed as a rectangular section.
Design moment (after redistrib.) M=570 kNm
Overall depth of section h=650 mm
Average web width bw=350 mm
Flange thickness hf=200 mm
Char yield strength of r'ment fyk=500 N/mm²
Max.aggregate size (for bar spc.) hagg=20 mm
Diameter of tension bars dia=25 mm
Diameter of link legs dial=10 mm

DESIGN SUMMARY	**Overall depth**	**650 mm**
	Effective depth	**570 mm**
	Width of section	**350 mm**
FLEXURE	**Parameter K**	**0.1671**
	Parameter K'	**0.1684**
	Lever arm ratio z/d	**0.8203**
TENSION REINFORCEMENT	**Steel area required**	**2804 mm²**
	Steel area provided	**2945 mm²**
	Diameter of bars	**25 mm**
	Number of bars	**6**
	Steel percentage req.	**1.405 %**
	Minimum area of steel	**300.5 mm²**
	Maximum area of steel	**9100 mm²**

Shear check

Location for shear calculation: 500 mm from support
Shear force due to ultimate load VEd=367 kN
Design shear stress vEd=VEd*10^3/(0.9*bw*d)=2.044 N/mm²
Concrete strut capacity vRdm=0.124*fck*(1-fck/250)=3.274 N/mm²
Angle of inclination of strut theta'=22°
Number of shear legs nsl=2
Chosen spacing s=225 mm

SHEAR SUMMARY

Design shear force	**367 kN**
Design shear stress	**2.044 N/mm²**
Concrete strut capacity	**3.274 N/mm²**
Area/spacing ratio	**0.6582**
Diameter of links	**10 mm**
Area of links	**157 mm²**
Maximum spacing	**238 mm**
Actual spacing	**225 mm**

Location: Ex3 - Continuous L-beam

Bending in flanged beams

Calculations are in accordance with EC2: Design of concrete structures and assume the use of a simplified rectangular concrete stress-block and that the depth to the neutral axis is restricted to 0.45*d.

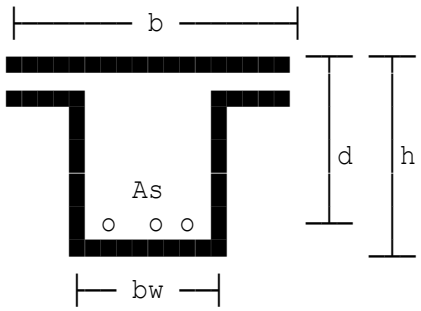

Distance between beam supports L=9 m
Moment before redistribution Mbef=780 kNm
Beam being analysed is considered as continuous.
Section considered has a sagging moment.
Overall depth of section h=700 mm
Average web width bw=350 mm
Flange thickness hf=250 mm
Char yield strength of r'ment fyk=500 N/mm²
Max.aggregate size (for bar spc.) hagg=20 mm
Diameter of tension bars dia=32 mm
Diameter of link legs dial=10 mm
Section being considered is a L-beam.

DESIGN SUMMARY	**Overall depth**	**700 mm**
	Effective depth	**600 mm**
	Flange width	**1615 mm**
	Web width	**350 mm**
FLEXURE	**Parameter K**	**0.0447**
	Parameter K'	**0.1684**
	Lever arm ratio z/d	**0.95**
TENSION REINFORCEMENT	**Steel area required**	**3147 mm²**
	Steel area provided	**3217 mm²**
	Diameter of bars	**32 mm**
	Number of bars	**4**
	Steel percentage req.	**0.3248 %**
	Minimum area of steel	**316.3 mm²**
	Maximum area of steel	**45220 mm²**

Deflection

Actual span to depth ratio l'd=L*1000/d=15
Allowable span/depth ratio l'da=k*N*F1*F2*F3=28.79

DESIGN SUMMARY DEFLECTION	**Actual l/d ratio**	**15**
	Basic l/d ratio	**34.82**
	Span factor	**1.3**
	Flange beam factor F1	**0.8**
	Long spans factor F2	**0.7778**
	Steel stress factor F3	**1.022**
	Allowable l/d ratio	**28.79**

Location: Ex4 - Simply supported arrangement

Bending in flanged beams

Calculations are in accordance with EC2: Design of concrete structures and assume the use of a simplified rectangular concrete stress-block and that the depth to the neutral axis is restricted to 0.45*d.

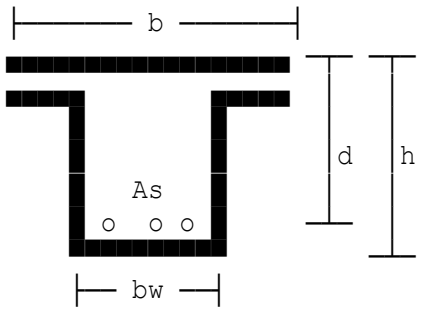

Distance between beam supports	L=7.2 m
Moment before redistribution	Mbef=480 kNm
Beam being analysed is considered	as non-continuous.
Overall depth of section	h=500 mm
Average web width	bw=650 mm
Flange thickness	hf=250 mm
Char yield strength of r'ment	fyk=500 N/mm²
Max.aggregate size (for bar spc.)	hagg=20 mm
Diameter of tension bars	dia=25 mm
Diameter of link legs	dial=10 mm

Section being considered is a T-beam.
NOTE: Clear distances vary.

DESIGN	**Overall depth**	**500 mm**
SUMMARY	**Effective depth**	**425 mm**
	Flange width	**2585 mm**
	Web width	**650 mm**
FLEXURE	**Parameter K**	**0.0343**
	Parameter K'	**0.1684**
	Lever arm ratio z/d	**0.95**
TENSION REINFORCEMENT	**Steel area required**	**2734 mm²**
	Steel area provided	**2945 mm²**
	Diameter of bars	**25 mm**
	Number of bars	**6**
	Steel percentage req.	**0.2489 %**
	Minimum area of steel	**416.1 mm²**
	Maximum area of steel	**51700 mm²**

Deflection

Actual span to depth ratio	l'd=L*1000/d=16.94
Allowable span/depth ratio	l'da=k*N*F1*F2*F3=43.68
Absolute value of span/depth	l'da=40*k=40

DESIGN	**Actual l/d ratio**	**16.94**
SUMMARY	**Basic l/d ratio**	**52.14**
DEFLECTION	**Span factor**	**1**
	Flange beam factor F1	**0.8**
	Long spans factor F2	**0.9722**
	Steel stress factor F3	**1.077**
	Allowable l/d ratio	**40**

Shear check

Location for shear calculation:	400mm from support
Shear force due to ultimate load	VEd=267 kN
Design shear stress	vEd=VEd*10^3/(0.9*bw*d)=1.074 N/mm²
Concrete strut capacity	vRdm=0.124*fck*(1-fck/250)=3.274 N/mm²
Angle of inclination of strut	theta'=22°
Number of shear legs	nsl=2

SHEAR SUMMARY		
	Design shear force	**267 kN**
	Design shear stress	**1.074 N/mm²**
	Concrete strut capacity	**3.274 N/mm²**
	Area/spacing ratio	**0.6422**
	Diameter of links	**10 mm**
	Area of links	**157 mm²**
	Maximum spacing	**244 mm**
	Actual spacing	**244 mm**

Location: Small beam - high-yield steel - no compression steel

Bending in flanged beams with optional calculations for shear, lap lengths, bar curtailment and limiting span/effective-depth ratio

Calculations are in accordance with Clause 3.4.4.4 of BS8110: Part 1 and thus assume the use of a simplified rectangular concrete stress-block, and that the depth to the neutral axis is restricted to 0.5*d.

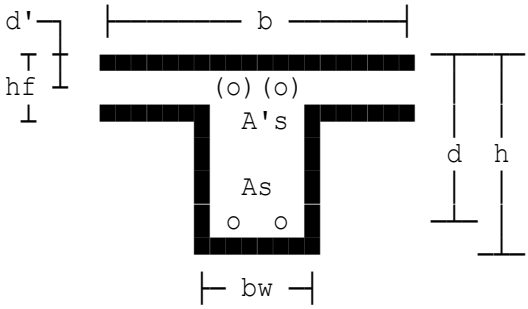

Design to BS8110(1997) with partial safety factor for steel gammaS=1.15
Ultimate BM before redistribution Mbef=12 kNm
Beam being analysed is considered as non-continuous.
Characteristic concrete strength fcu=35 N/mm²
Max.aggregate size (for bar spc) hagg=15 mm
Char.strength of long'l bars fy=500 N/mm²
Longitudinal reinforcement is high-yield steel.
Diameter of tension bars dia=12 mm
Char.strength of link steel fyv=500 N/mm²
Diameter of link legs dial=6 mm
High-yield steel shear reinforcement.
Designated exposure class is XC1
Specified fixing tolerance tol=10 mm
Nominal concrete cover cover=25 mm
Overall depth of section h=275 mm
Effective depth of section d=238 mm
Breadth of flange b=400 mm
Breadth of rib bw=200 mm
Thickness of flange hf=100 mm

Longitudinal reinforcement

TENSION REINFORCEMENT SUMMARY	**Characteristic strength**	**500 N/mm²**
	Diameter of bars	**12 mm**
	Number of bars	**2**
	arranged in a single layer	
	Cover to all steel	**25 mm**
	Area of steel required	**122.07 mm²**
	Area of steel provided	**226.19 mm²**
	Percentage provided:	
	of gross section	**0.30159 %**
	of web area	**0.41126 %**
	Weight of steel provided	**1.7756 kg/m**
	Max.permissible spacing	**261 mm**
	Link size assumed	**6 mm**

Check on span/effective-depth ratio

```
Interpolating from Table 3.9 with bw/b=0.5
Basic ratio for simply-sup.span   bs'd=17.143
As applied-moment factor          M'bd2=M*1000*1000/(b*d^2)
                                       =0.52962 N/mm²
Mod.factor for tension steel from
equation 7 (Table 3.10)           modf1=0.55+(477-fs)/(120*(0.9
                                        +M'bd2))=2.2819
but this cannot exceed 2, so      modf1=2
Mod.factor for no comp.steel      modf2=1
Maximum permissible
span/effective-depth ratio        ps'd=bs'd*modf1*modf2=34.286
Span of beam (Clause 3.4.1.2-4)   span=7 m
Actual span/effective-depth ratio as'd=1000*span/d=29.412
As this does not exceed                34.286,  this is Acceptable.
```

Bending-moment capacities at steel curtailment points

As there are only two bars in tension, no curtailment is possible.

Anchorage and lap lengths (Clause 3.12.8 of BS8110: Part 1)

```
Type 2 deformed bars: bond coefficient beta=0.50 (Table 3.26)
Tension reinforcement:
Force in tension bar at yield     Ft=fy/gammaS*PI*dia^2/4=49173 N
Ultimate anchorage bond stress    fbu=beta*SQR(fcu)=2.958 N/mm²
Anchorage and tension lap length  lap=Ft/(PI*dia*fbu)=440.95 mm
                                     =450 mm (rounded)
1.4 * tension lap length             =620 mm (rounded)
2 * tension lap length               =890 mm (rounded)
```

Shear reinforcement

Shear calculations are in accordance with Clauses 3.4.5 of Code.

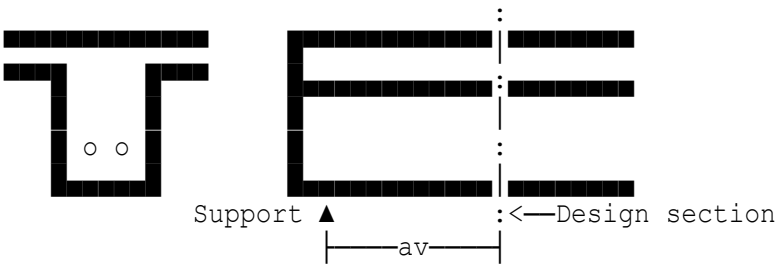


```
Location for shear calculation:   0.25 m from support
Effective breadth for shear       bv=200 mm
Shear force due to ultimate load  V=100 kN
Distance from support             av=250 mm
No.of tension bars effective at section nbars=2
Number of legs to be provided     nlegs=2
Chosen link spacing               sv'=80 mm
```

Use 6 mm links (two legs), spaced at 80 mm centres along beam.

SHEAR	**Characteristic strength**	**500 N/mm²**
REINFORCEMENT	**Diameter of links**	**6 mm**
SUMMARY	**Number of legs**	**2**
	Spacing	**80 mm**
	Approx.weight of links	**3.2237 kg/m**

Location: Narrow deep beam - mild steel - no compression steel

Bending in flanged beams with optional calculations for shear, lap lengths, bar curtailment and limiting span/effective-depth ratio

Calculations are in accordance with Clause 3.4.4.4 of BS8110: Part 1 and thus assume the use of a simplified rectangular concrete stress-block, and that the depth to the neutral axis is restricted to 0.5*d.

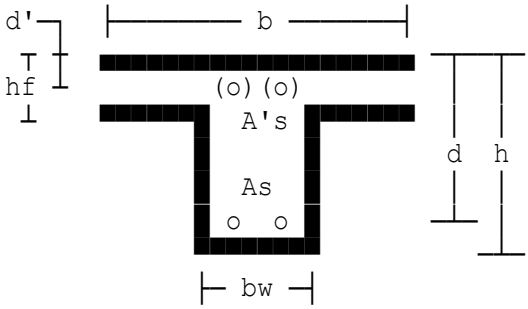

Design to BS8110(1997) with partial safety factor for steel gammaS=1.15
Ultimate BM before redistribution Mbef=1000 kNm
Beam being analysed is considered as continuous.

Design moment (after redistrib.)	M=1000 kNm
Characteristic concrete strength	fcu=30 N/mm²
Max.aggregate size (for bar spc)	hagg=15 mm
Char.strength of long'l bars	fy=250 N/mm²
Longitudinal reinforcement is mild steel.	
Diameter of tension bars	dia=25 mm
Char.strength of link steel	fyv=250 N/mm²
Diameter of link legs	dial=12 mm
Mild steel shear reinforcement.	
Designated exposure class is XC2	
Specified fixing tolerance	tol=10 mm
Nominal concrete cover	cover=35 mm
Overall depth of section	h=950 mm
Effective depth of section	d=890.5 mm
Breadth of flange	b=1500 mm
Breadth of rib	bw=300 mm
Thickness of flange	hf=150 mm

Longitudinal reinforcement

TENSION	**Characteristic strength**	**250 N/mm²**
REINFORCEMENT	**Diameter of bars**	**25 mm**
SUMMARY	**Number of bars**	**12**
	arranged in a single layer	
	Cover to all steel	**35 mm**
	Area of steel required	**5437.5 mm²**
	Area of steel provided	**5890.5 mm²**
	Percentage provided:	
	of gross section	**1.2668 %**
	of web area	**2.0668 %**
	Weight of steel provided	**46.24 kg/m**
	Max.permissible spacing	**300 mm**
	Link size assumed	**12 mm**

As overall depth h exceeds 750 mm, bars to control cracking must be provided on side faces of beam (Cl. 3.12.5.4 and 3.12.11.2.9)

Check on span/effective-depth ratio

```
Interpolating from Table 3.9 with bw/b=0.2
Basic ratio for continuous span   bs'd=20.8
As applied-moment factor          M'bd2=M*1000*1000/(b*d^2)=0.8407 N/mm²
Mod.factor for tension steel from
equation 7 (Table 3.10)           modf1=0.55+(477-fs)/(120*(0.9
                                        +M'bd2))=2.097
but this cannot exceed 2, so      modf1=2
Mod.factor for no comp.steel      modf2=1
Maximum permissible
span/effective-depth ratio        ps'd=bs'd*modf1*modf2=41.6
Span of beam (Clause 3.4.1.2-4)   span=17 m
As span exceeds 10 m and partitions/finishes are sensitive to
deflection multiply basic ratio by 10/span (in m) ps'd=ps'd*10/span
                                                     =24.471
Actual span/effective-depth ratio as'd=1000*span/d=19.09
As this does not exceed               24.471,  this is Acceptable.
```

Bending-moment capacities at steel curtailment points

```
The number of tension bars is even, so reduce in pairs.

With 10 tension bars, effective steel area Asrd=4908.7 mm²
Reduced design moment             Mred=M*nbtr/nbart=833.33 kNm

With 8 tension bars, effective steel area Asrd=3927 mm²
Reduced design moment             Mred=M*nbtr/nbart=666.67 kNm

With 6 tension bars, effective steel area Asrd=2945.2 mm²
Reduced design moment             Mred=M*nbtr/nbart=500 kNm

With 4 tension bars, effective steel area Asrd=1963.5 mm²
Reduced design moment             Mred=M*nbtr/nbart=333.33 kNm

With 2 tension bars, effective steel area Asrd=981.75 mm²
Reduced design moment             Mred=M*nbtr/nbart=166.67 kNm

No further curtailment is possible. However, bars must extend beyond
the theoretical curtailment points as required below.

Min.extension to tension bars equal to eff.depth d of 890.5 mm
as this is not less than 12*tension bar diameter, i.e. 300 mm.
```

Anchorage and lap lengths (Clause 3.12.8 of BS8110: Part 1)

```
Plain bars: bond coefficient      beta=0.28 (Table 3.26)
Tension reinforcement:
Force in tension bar at yield     Ft=fy/gammaS*PI*dia^2/4=106712 N
Ultimate anchorage bond stress    fbu=beta*SQR(fcu)=1.5336 N/mm²
Anchorage and tension lap length  lap=Ft/(PI*dia*fbu)=885.94 mm
                                     =890 mm (rounded)
1.4 * tension lap length             =1250 mm (rounded)
2 * tension lap length               =1780 mm (rounded)
```

Shear reinforcement

Shear calculations are in accordance with Clauses 3.4.5 of Code.

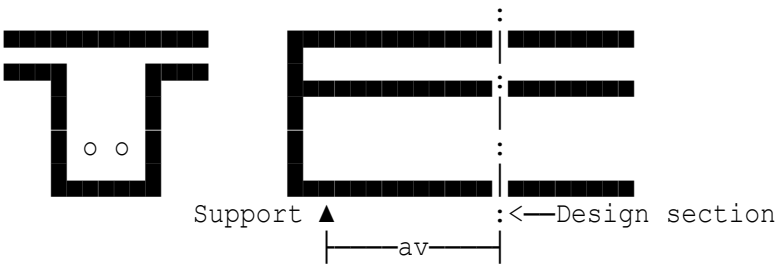


```
Location for shear calculation:   0.5 m from support
Effective breadth for shear       bv=300 mm
Shear force due to ultimate load  V=800 kN
Distance from support             av=500 mm
Diameter of tension bars          dias=25 mm
No.of tension bars effective at section nbars=12
Number of legs to be provided     nlegs=2
Chosen link spacing               sv'=75 mm
```

Use 12 mm links (two legs), spaced at 75 mm centres along beam.

SHEAR	**Characteristic strength**	**250 N/mm²**
REINFORCEMENT	**Diameter of links**	**12 mm**
SUMMARY	**Number of legs**	**2**
	Spacing	**75 mm**
	Approx.weight of links	**54.97 kg/m**

Location: Shallow beam - square twist - with compression steel

Bending in flanged beams with optional calculations for shear, lap lengths, bar curtailment and limiting span/effective-depth ratio

Calculations are in accordance with Clause 3.4.4.4 of BS8110: Part 1 and thus assume the use of a simplified rectangular concrete stress-block, and that the depth to the neutral axis is restricted to 0.5*d.

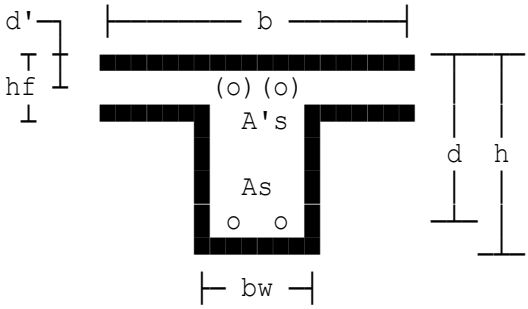

Design to BS8110(1997) with partial safety factor for steel gammaS=1.15
Ultimate BM before redistribution Mbef=95 kNm
Beam being analysed is considered as continuous.

Design moment (after redistrib.)	M=76 kNm
Characteristic concrete strength	fcu=35 N/mm²
Max.aggregate size (for bar spc)	hagg=15 mm
Char.strength of long'l bars	fy=425 N/mm²
Steel strength other than those given in Table 3.1 of BS8110.	
Min.percentage when bw/b>=0.4	permn1=0.16 %
Min.percentage when bw/b<0.4	permn2=0.22 %
Diameter of tension bars	dia=20 mm
Char.strength of link steel	fyv=250 N/mm²
Diameter of link legs	dial=8 mm
Mild steel shear reinforcement.	
Nominal concrete cover	cover=30 mm
Overall depth of section	h=175 mm
Effective depth of section	d=127 mm
Breadth of flange	b=1000 mm
Breadth of rib	bw=300 mm
Thickness of flange	hf=75 mm

Longitudinal reinforcement

Depth to compression bars d'=46 mm

TENSION REINFORCEMENT SUMMARY	**Characteristic strength**	**425 N/mm²**
	Diameter of bars	**20 mm**
	Number of bars	**7**
	arranged in a single layer	
	Cover to all steel	**30 mm**
	Area of steel required	**1982.3 mm²**
	Area of steel provided	**2199.1 mm²**
	Percentage provided:	
	of gross section	**2.0944 %**
	of web area	**4.1888 %**
	Weight of steel provided	**17.263 kg/m**
	Max.permissible spacing	**147 mm**
	Link size assumed	**8 mm**

COMPRESSION	**Characteristic strength**	**425 N/mm²**
REINFORCEMENT	**Diameter of bars**	**16 mm**
SUMMARY	**Number of bars**	**2**
	arranged in a single layer	
	Cover to all steel	**30 mm**
	Area of steel required	**300.47 mm²**
	Area of steel provided	**402.12 mm²**
	Percentage provided:	
	of gross section	**0.38298 %**
	of web area	**0.76595 %**
	of flange area	**0.53617 %**
	Weight of steel provided	**3.1567 kg/m**
	Minimum poss.link size	**6 mm**
	Maximum spacing of links	**192 mm**

Check on span/effective-depth ratio

Interpolating from Table 3.9 with	bw/b=0.3
Basic ratio for continuous span	bs'd=20.8
As applied-moment factor	M'bd2=M*1000*1000/(b*d^2)=4.712 N/mm²
Mod.factor for tension steel from equation 7 (Table 3.10)	modf1=0.55+(477-fs)/(120*(0.9 +M'bd2))=0.78425
Area of comp.steel provided	As'pr=402.12 mm²
Percentage of compression steel	per'n=100*As'pr/(b*d)=0.31663 %
From Equation 9 of BS8110, with percentage of comp.steel=0.31663 %,	
Mod.factor for compression steel	modf2=1+per'n/(3+per'n)=1.0955
Maximum permissible span/effective-depth ratio	ps'd=bs'd*modf1*modf2=17.87
Span of beam (Clause 3.4.1.2-4)	span=2.3 m

WARNING:
Actual span/effective-depth ratio 18.11
Permissible span/effective-depth ratio 17.87
Hence unacceptable.

Location: Large beam - high-yield steel - with compression steel

Bending in flanged beams with optional calculations for shear, lap lengths, bar curtailment and limiting span/effective-depth ratio

Calculations are in accordance with Clause 3.4.4.4 of BS8110: Part 1 and thus assume the use of a simplified rectangular concrete stress-block, and that the depth to the neutral axis is restricted to 0.5*d.

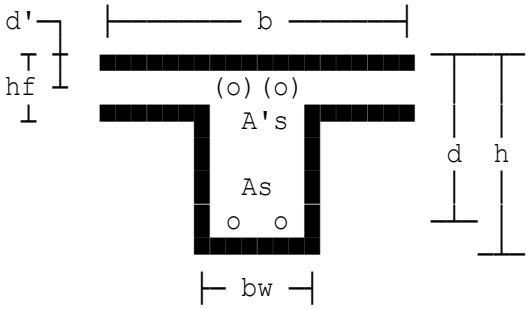

Design to BS8110(1997) with partial safety factor for steel gammaS=1.15
Ultimate BM before redistribution Mbef=9567 kNm
Beam being analysed is considered as continuous.
Design moment (after redistrib.) M=9345 kNm
Characteristic concrete strength fcu=50 N/mm²
Max.aggregate size (for bar spc) hagg=15 mm
Char.strength of long'l bars fy=500 N/mm²
Longitudinal reinforcement is high-yield steel.
Diameter of tension bars dia=40 mm
Char.strength of link steel fyv=500 N/mm²
Diameter of link legs dial=12 mm
High-yield steel shear reinforcement.
Designated exposure class is XC3
Specified fixing tolerance tol=10 mm
Nominal concrete cover cover=50 mm
Overall depth of section h=1000 mm
Effective depth of section d=918 mm
Breadth of flange b=2000 mm
Breadth of rib bw=500 mm
Thickness of flange hf=175 mm

Longitudinal reinforcement

Depth to compression bars d'=72 mm

TENSION	**Characteristic strength**	**500 N/mm²**
REINFORCEMENT	**Diameter of bars**	**40 mm**
SUMMARY	**Number of bars**	**22**
	arranged in a single layer	
	Cover to all steel	**50 mm**
	Area of steel required	**27319 mm²**
	Area of steel provided	**27646 mm²**
	Percentage provided:	
	of gross section	**3.6257 %**
	of web area	**5.5292 %**
	Weight of steel provided	**217.02 kg/m**
	Max.permissible spacing	**139 mm**
	Link size assumed	**12 mm**

COMPRESSION	**Characteristic strength**	**500 N/mm²**
REINFORCEMENT	**Diameter of bars**	**20 mm**
SUMMARY	**Number of bars**	**10**
	arranged in a single layer	
	Cover to all steel	**50 mm**
	Area of steel required	**3135.3 mm²**
	Area of steel provided	**3141.6 mm²**
	Percentage provided:	
	of gross section	**0.41201 %**
	of web area	**0.62832 %**
	of flange area	**0.8976 %**
	Weight of steel provided	**24.662 kg/m**
	Minimum poss.link size	**6 mm**
	Maximum spacing of links	**240 mm**

As overall depth h exceeds 750 mm, bars to control cracking must be provided on side faces of beam (Cl. 3.12.5.4 and 3.12.11.2.9)

Check on span/effective-depth ratio

Interpolating from Table 3.9 with bw/b=0.25
Basic ratio for continuous span bs'd=20.8

WARNING:
As fs exceeds 333.3 N/mm² Table 3.10 is invalid (Cl. 3.4.6.5).
Either the steel yield stress is too high or the moment redistribution from the midspan section is excessive.

Location: Ex1 - Continuous T-beam

Bending in flanged beams

Calculations are in accordance with EC2: Design of concrete structures and assume the use of a simplified rectangular concrete stress-block, and that the depth to the neutral axis is restricted to 0.45*d.

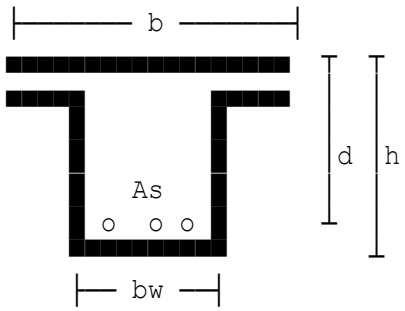

Distance between beam supports L=8.2 m
Design BM before redistribution Mbef=600 kNm
Beam being analysed is considered as continuous.
Section considered has a sagging moment.
Overall depth of section h=650 mm
Average web width bw=350 mm
Flange thickness hf=200 mm
Char yield strength of r'ment fyk=500 N/mm²
Max.aggregate size (for bar spc.) hagg=20 mm
Diameter of tension bars dia=25 mm
Diameter of link legs dial=10 mm
Section being considered is a T-beam.

DESIGN	**Overall depth**	**650 mm**
SUMMARY	**Effective depth**	**560 mm**
	Flange width	**2194 mm**
	Web width	**350 mm**
FLEXURE	**Parameter K**	**0.0291**
	Parameter K'	**0.1684**
	Lever arm ratio z/d	**0.95**
TENSION REINFORCEMENT	**Steel area required**	**2594 mm²**
	Steel area provided	**2945 mm²**
	Diameter of bars	**25 mm**
	Number of bars	**6**
	Steel percentage req.	**0.2111 %**
	Minimum area of steel	**295.2 mm²**
	Maximum area of steel	**57044 mm²**

Deflection check

Actual span to depth ratio l'd=L*1000/d=14.64
Allowable span/depth ratio l'da=k*N*F1*F2*F3=68.14
Absolute value of span/depth l'da=40*k=52

DESIGN	**Actual l/d ratio**	**14.64**
SUMMARY	**Basic l/d ratio**	**67.6**
DEFLECTION	**Span factor**	**1.3**
	Flange beam factor F1	**0.8**
	Long spans factor F2	**0.8537**
	Steel stress factor F3	**1.135**
	Allowable l/d ratio	**52**

Shear check

Location for shear calculation:	400mm from support
Shear force due to ultimate load	VEd=267 kN
Design shear stress	vEd=VEd*10^3/(0.9*bw*d)=1.514 N/mm²
Concrete strut capacity	vRdm=0.124*fck*(1-fck/250)=3.274 N/mm²
Angle of inclination of strut	theta'=22°
Number of shear legs	nsl=4
Chosen spacing	s=125 mm

SHEAR SUMMARY	**Design shear force**	**267 kN**
	Design shear stress	**1.514 N/mm²**
	Concrete strut capacity	**3.274 N/mm²**
	Area/spacing ratio	**0.4874**
	Diameter of links	**10 mm**
	Area of links	**314 mm²**
	Maximum spacing (based on 0.75d)	**420 mm**
	Actual spacing	**125 mm**

Location: Ex2 - Support condition

Bending in flanged beams

Calculations are in accordance with EC2: Design of concrete structures and assume the use of a simplified rectangular concrete stress-block, and that the depth to the neutral axis is restricted to 0.45*d.

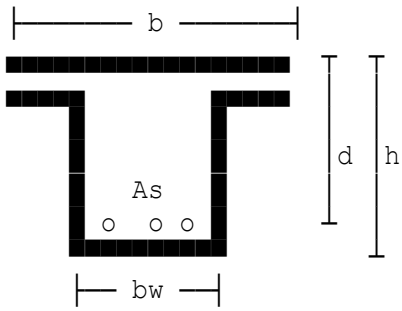

Distance between beam supports L=8.2 m
Design BM before redistribution Mbef=650 kNm
Beam being analysed is considered as continuous.
Section considered has a hogging moment and will be designed as a rectangular section.
Design moment (after redistrib.) M=570 kNm
Overall depth of section h=650 mm
Average web width bw=350 mm
Flange thickness hf=200 mm
Char yield strength of r'ment fyk=500 N/mm²
Max.aggregate size (for bar spc.) hagg=20 mm
Diameter of tension bars dia=25 mm
Diameter of link legs dial=10 mm

DESIGN SUMMARY	**Overall depth**	**650 mm**
	Effective depth	**570 mm**
	Width of section	**350 mm**
FLEXURE	**Parameter K**	**0.1671**
	Parameter K'	**0.1684**
	Lever arm ratio z/d	**0.8203**
TENSION REINFORCEMENT	**Steel area required**	**2804 mm²**
	Steel area provided	**2945 mm²**
	Diameter of bars	**25 mm**
	Number of bars	**6**
	Steel percentage req.	**1.405 %**
	Minimum area of steel	**300.5 mm²**
	Maximum area of steel	**9100 mm²**

Shear check

Location for shear calculation: 500 mm from support
Shear force due to ultimate load VEd=367 kN
Design shear stress vEd=VEd*10^3/(0.9*bw*d)=2.044 N/mm²
Concrete strut capacity vRdm=0.124*fck*(1-fck/250)=3.274 N/mm²
Angle of inclination of strut theta'=22°
Number of shear legs nsl=2
Chosen spacing s=225 mm

SHEAR SUMMARY

Design shear force	**367 kN**
Design shear stress	**2.044 N/mm²**
Concrete strut capacity	**3.274 N/mm²**
Area/spacing ratio	**0.6582**
Diameter of links	**10 mm**
Area of links	**157 mm²**
Maximum spacing	**238 mm**
Actual spacing	**225 mm**

Location: Ex3 - Continuous L-beam

Bending in flanged beams

Calculations are in accordance with EC2: Design of concrete structures and assume the use of a simplified rectangular concrete stress-block, and that the depth to the neutral axis is restricted to 0.45*d.

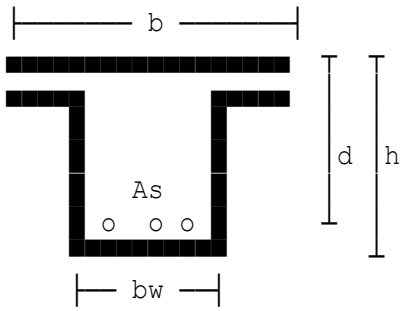

Distance between beam supports L=9 m
Design BM before redistribution Mbef=780 kNm
Beam being analysed is considered as continuous.
Section considered has a sagging moment.
Overall depth of section h=700 mm
Average web width bw=350 mm
Flange thickness hf=250 mm
Char yield strength of r'ment fyk=500 N/mm²
Max.aggregate size (for bar spc.) hagg=20 mm
Diameter of tension bars dia=32 mm
Diameter of link legs dial=10 mm
Section being considered is a L-beam.

DESIGN	**Overall depth**	**700 mm**
SUMMARY	**Effective depth**	**600 mm**
	Flange width	**1615 mm**
	Web width	**350 mm**
FLEXURE	**Parameter K**	**0.0447**
	Parameter K'	**0.1684**
	Lever arm ratio z/d	**0.95**
TENSION REINFORCEMENT	**Steel area required**	**3147 mm²**
	Steel area provided	**3217 mm²**
	Diameter of bars	**32 mm**
	Number of bars	**4**
	Steel percentage req.	**0.3248 %**
	Minimum area of steel	**316.3 mm²**
	Maximum area of steel	**45220 mm²**

Deflection check

Actual span to depth ratio l'd=L*1000/d=15
Allowable span/depth ratio l'da=k*N*F1*F2*F3=28.79

DESIGN	**Actual l/d ratio**	**15**
SUMMARY	**Basic l/d ratio**	**34.82**
DEFLECTION	**Span factor**	**1.3**
	Flange beam factor F1	**0.8**
	Long spans factor F2	**0.7778**
	Steel stress factor F3	**1.022**
	Allowable l/d ratio	**28.79**

Location: Ex4 - Simply supported arrangement

Bending in flanged beams

Calculations are in accordance with EC2: Design of concrete structures and assume the use of a simplified rectangular concrete stress-block, and that the depth to the neutral axis is restricted to 0.45*d.

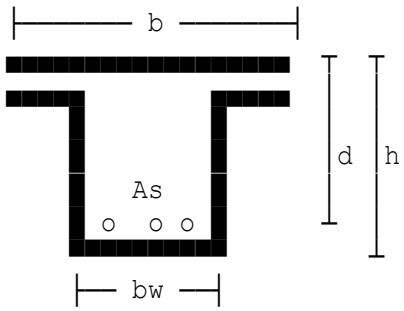

Distance between beam supports L=7.2 m
Design BM before redistribution Mbef=480 kNm
Beam being analysed is considered as non-continuous.
Overall depth of section h=500 mm
Average web width bw=650 mm
Flange thickness hf=250 mm
Char yield strength of r'ment fyk=500 N/mm²
Max.aggregate size (for bar spc.) hagg=20 mm
Diameter of tension bars dia=25 mm
Diameter of link legs dial=10 mm
Section being considered is a T-beam.
NOTE: Clear distances vary.

DESIGN SUMMARY	**Overall depth**	**500 mm**
	Effective depth	**425 mm**
	Flange width	**2585 mm**
	Web width	**650 mm**
FLEXURE	**Parameter K**	**0.0343**
	Parameter K'	**0.1684**
	Lever arm ratio z/d	**0.95**
TENSION REINFORCEMENT	**Steel area required**	**2734 mm²**
	Steel area provided	**2945 mm²**
	Diameter of bars	**25 mm**
	Number of bars	**6**
	Steel percentage req.	**0.2489 %**
	Minimum area of steel	**416.1 mm²**
	Maximum area of steel	**51700 mm²**

Deflection check

Actual span to depth ratio l'd=L*1000/d=16.94
Allowable span/depth ratio l'da=k*N*F1*F2*F3=43.68
Absolute value of span/depth l'da=40*k=40

DESIGN SUMMARY DEFLECTION	**Actual l/d ratio**	**16.94**
	Basic l/d ratio	**52.14**
	Span factor	**1**
	Flange beam factor F1	**0.8**
	Long spans factor F2	**0.9722**
	Steel stress factor F3	**1.077**
	Allowable l/d ratio	**40**

Shear check

Location for shear calculation:	400mm from support
Shear force due to ultimate load	VEd=267 kN
Design shear stress	vEd=VEd*10^3/(0.9*bw*d)=1.074 N/mm²
Concrete strut capacity	vRdm=0.124*fck*(1-fck/250)=3.274 N/mm²
Angle of inclination of strut	theta'=22°
Number of shear legs	nsl=2

SHEAR SUMMARY		
	Design shear force	**267 kN**
	Design shear stress	**1.074 N/mm²**
	Concrete strut capacity	**3.274 N/mm²**
	Area/spacing ratio	**0.6422**
	Diameter of links	**10 mm**
	Area of links	**157 mm²**
	Maximum spacing	**244 mm**
	Actual spacing	**244 mm**

Location: Medium thick wall. Normal-weight concrete. Mild steel.

Design of concrete walls containing reinforcement to BS8110

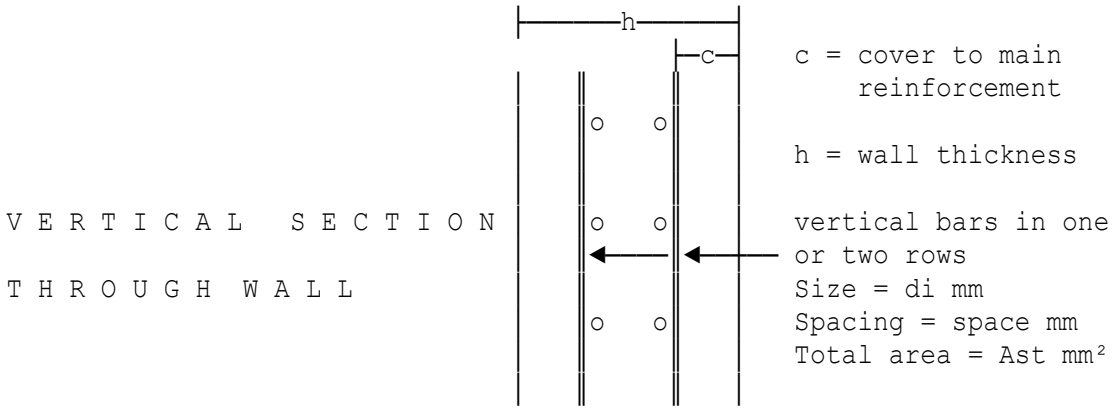

Design to BS8110(1997)

Total length of wall section	b=3000 mm
Thickness of wall section	h=300 mm
Concrete grade	fcu=30 N/mm²
Steel strength	fy=250 N/mm²
Number of rows of bars (1 or 2)	rows=2
Vertical bar size	di=20 mm

Designated exposure class is XC2

Specified fixing tolerance	tol=10 mm
Cover to main bars	c=35 mm
Vertical bar spacing	space=125 mm
Clear height of wall	lo=3.5 m

The end condition at the top of the wall in accordance with Clause 3.8.1.6.2 of BS8110 is condition 2
The end condition at the bottom of the wall in accordance with Clause 3.8.1.6.2 of BS8110 is condition 1

BS8110 Classification: Stocky braced reinforced-concrete wall of normal-weight concrete

Maximum load supported nw=h*(0.35*fcu+0.67*fy*rho1)
=3991.9 kN per metre

Location: Thick wall. Lightweight concrete. High-yield steel.

Design of concrete walls containing reinforcement to BS8110

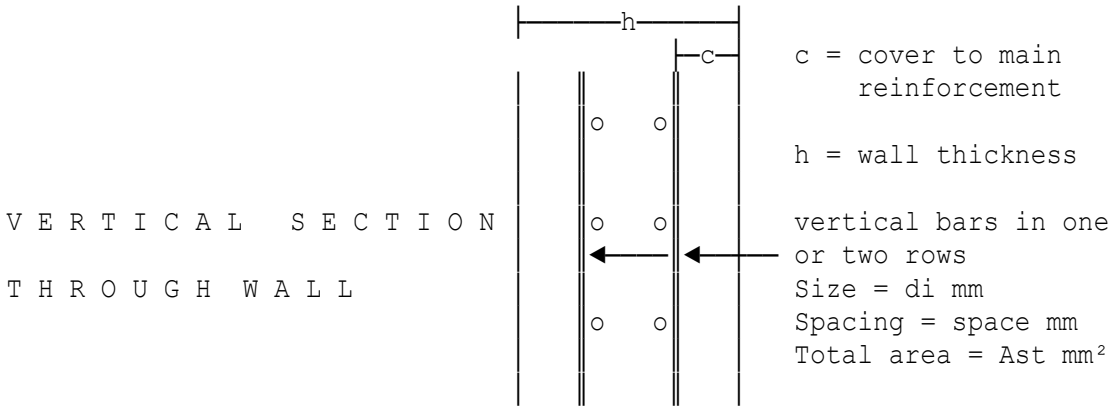

Design to BS8110(1997)

Total length of wall section	b=4000 mm
Thickness of wall section	h=750 mm
Density of concrete	density=1200 kg/m³
Concrete grade	fcu=30 N/mm²
Steel strength	fy=500 N/mm²
Number of rows of bars (1 or 2)	rows=2
Vertical bar size	di=25 mm

Designated exposure class is XC3

Specified fixing tolerance	tol=10 mm
Cover to main bars	c=45 mm
Vertical bar spacing	space=200 mm
Clear height of wall	lo=3.5 m

The end condition at the top of the wall in accordance with Clause 3.8.1.6.2 of BS8110 is condition 3
The end condition at the bottom of the wall in accordance with Clause 3.8.1.6.2 of BS8110 is condition 1

BS8110 Classification: Stocky unbraced reinforced-concrete wall

Since wall supports an approximately-symmetrical beam or slab system, requirements of Clause 3.9.3.3 of BS8110 apply.
Design section to resist axial thrust plus nominal moment corresponding to an eccentricity of 0.05h (i.e. 37.5 mm or 20 mm, whichever is greater.

Max.resistance nw=h*(k1*(d-k2*h)+rho1*fy*(d-h/2))/(d+ex-h/2)
=11137 kN per metre.

Since the maximum load supported by a stocky braced wall is
nw=h*(0.35*fcu+0.7*fy*rho1)
=9593.1 kN per metre,
it would be sensible to restrict the load-carrying capacity of a similar unbraced section to this value.

Location: Thin wall. Normal-weight concrete. High-yield steel.

Design of concrete walls containing reinforcement to BS8110

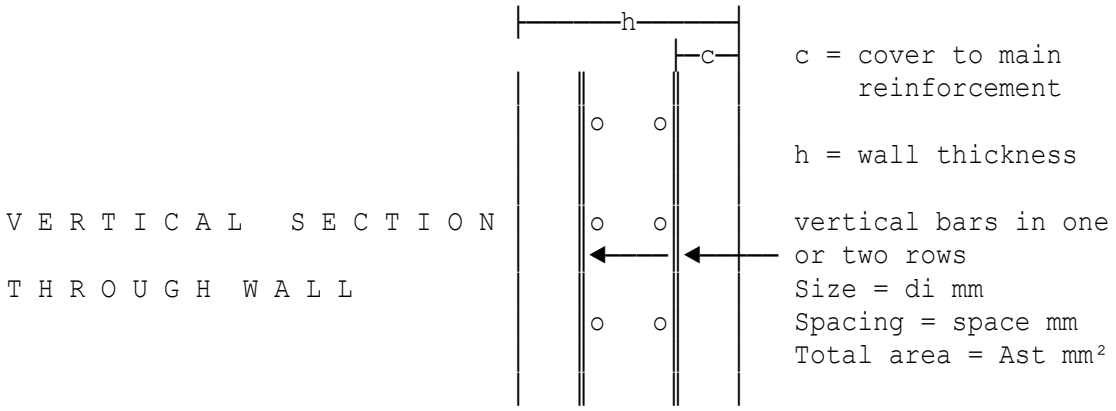

Design to BS8110(1997)

Total length of wall section	b=3000 mm
Thickness of wall section	h=100 mm
Concrete grade	fcu=30 N/mm²
Steel strength	fy=500 N/mm²
Number of rows of bars (1 or 2)	rows=2
Vertical bar size	di=12 mm
Designated exposure class is XC1	
Specified fixing tolerance	tol=10 mm
Cover to main bars	c=25 mm
Vertical bar spacing	space=100 mm
Clear height of wall	lo=3.5 m

The end condition at the top of the wall in accordance with Clause 3.8.1.6.2 of BS8110 is condition 1
The end condition at the bottom of the wall in accordance with Clause 3.8.1.6.2 of BS8110 is condition 1

BS8110 Classification:Slender braced reinforced-concrete wall of normal-weight concrete

In this case the requirements of Clause 3.9.3.7.1 of BS8110 apply. First determine in-plane forces on section, due to in-plane axial loads plus moments resulting from horizontal forces, by an elastic analysis assuming that no tension occurs in the concrete. Then calculate effects of transverse moments separately, and combine with axial force acting at point concerned, obtained from previous calculation, using rigorous limit-state analysis. Total transverse moment must sum an additional moment due to slenderness with that resulting from applied loads, by considering wall as slender column bending about minor axis (i.e. use Proforma 91). If wall is reinforced by single central layer such additional moments must be doubled (see BS8110, Cl.3.9.3.7.3).

Location: Medium thick wall using normal-weight concrete

Design of concrete walls containing reinforcement to EC2

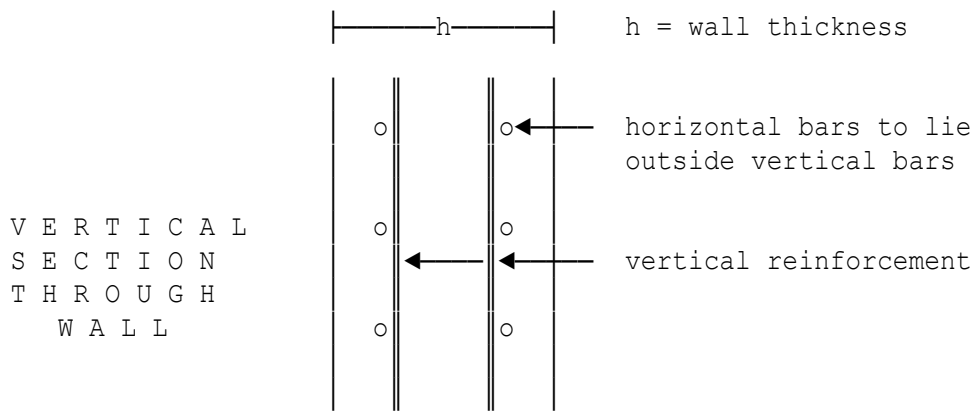

Char yield strength of reinf'ment fyk=500 N/mm²
Number of rows of bars (1 or 2) rows=2
Vertical bar diameter dia=16 mm
Horizontal bar diameter dial=12 mm

Section properties

Wall thickness h=300 mm
Length of wall section b=1000 mm
Depth of comp.reinforcement d2=55 mm

Loading details

Clear height between restraints l=3.5 m
Design ultimate axial load N=2000 kN/m
Larger initial end mt.(positive) M2=114.5 kNm/m
Smaller initial end moment M1=0 kNm/m

Slenderness (EC2 Clause 5.8.3.2)

About Y-Y axis:
Wall is considered to be braced about the stronger axis.
Fixity condition at top (1-3) cty=2
Fixity condition at bottom (1-3) cby=2
About Z-Z axis:
Wall is considered to be braced about the weaker axis.
Fixity condition at top (1-3) ctz=2
Fixity condition at bottom (1-3) cbz=2
For Y-Y stronger axis:
Slenderness lamy=loy/iy=10.306

Design moments (Clause 5.8.8.2)

Design moment	MEd=Mo2=129.38E6 Nmm

Axial load and moment considerations

Effective/overall-depth ratio	d2h=d2/h=0.18333
Axial load ratio	Nrat=NEd/(b*h*fck)=0.26667
Moment ratio	Mrat=MEd/(b*h^2*fck)=0.0575

Longitudinal reinforcement

Chart data for rectangular columns is taken from 'The Concrete Centre' publication entitled 'Worked Examples to Eurocode 2: Volume 1'.

Area of steel required	As=val*fck/fyk*b*h=0 mm²/m
Minimum permitted area of steel	Asmin=0.002*b*h=600 mm²/m
Provide minimum steel	As=Asmin=600 mm²/m
Number of bars provided	nbars=8 /m

DESIGN SUMMARY

Wall thickness	**300 mm**
Clear wall height	**3.5 m**
Design axial load	**2000 kN/m**
Design BM (Z-Z axis)	**129.38 kNm/m**
Vert.reinft.diameter	**16 mm**
Area of steel required	**600 mm²/m**
Area of steel provided	**1608.5 mm²/m**
Horiz.reinft.diameter	**12 mm**
Horiz.reinft.spacing	**400 mm**

Location: EX2 - Thick wall using normal-weight concrete

Design of concrete walls containing reinforcement to EC2

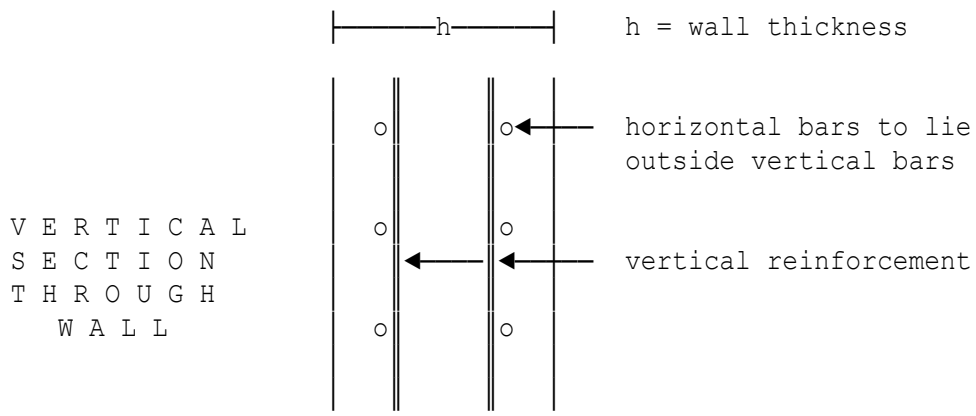

Char yield strength of reinf'ment fyk=500 N/mm²
Number of rows of bars (1 or 2) rows=2
Vertical bar diameter dia=25 mm
Horizontal bar diameter dial=10 mm

Section properties

Wall thickness h=750 mm
Length of wall section b=1000 mm
Depth of comp.reinforcement d2=68 mm

Loading details

Clear height between restraints l=3.5 m
Design ultimate axial load N=3000 kN/m
Larger initial end mt.(positive) M2=100 kNm/m
Smaller initial end moment M1=0 kNm/m

Slenderness (EC2 Clause 5.8.3.2)

About Y-Y axis:
Wall is considered to be unbraced about the stronger axis.
Fixity condition at top (1-3) cty=1
Fixity condition at bottom (1-3) cby=1
About Z-Z axis:
Wall is considered to be braced about the weaker axis.
Fixity condition at top (1-3) ctz=1
Fixity condition at bottom (1-3) cbz=1
For Y-Y stronger axis:
Slenderness lamy=loy/iy=14.549

Design moments (Clause 5.8.8.2)

Design moment MEd=Mo2=119.69E6 Nmm

Axial load and moment considerations

Effective/overall-depth ratio d2h=d2/h=0.090667
Axial load ratio Nrat=NEd/(b*h*fck)=0.16
Moment ratio Mrat=MEd/(b*h^2*fck)=0.0085111

Longitudinal reinforcement

Chart data for rectangular columns is taken from 'The Concrete Centre' publication entitled 'Worked Examples to Eurocode 2: Volume 1'.

Area of steel required As=val*fck/fyk*b*h=0 mm²/m
Minimum permitted area of steel Asmin=0.002*b*h=1500 mm²/m
Provide minimum steel As=Asmin=1500 mm²/m
Number of bars provided nbars=8 /m

DESIGN SUMMARY	**Wall thickness**	**750 mm**
	Clear wall height	**3.5 m**
	Design axial load	**3000 kN/m**
	Design BM (Z-Z axis)	**119.69 kNm/m**
	Vert.reinft.diameter	**25 mm**
	Area of steel required	**1500 mm²/m**
	Area of steel provided	**3927 mm²/m**
	Horiz.reinft.diameter	**10 mm**
	Horiz.reinft.spacing	**400 mm**

Location: EX3 - Plain concrete thin wall

Design of concrete walls containing reinforcement to EC2

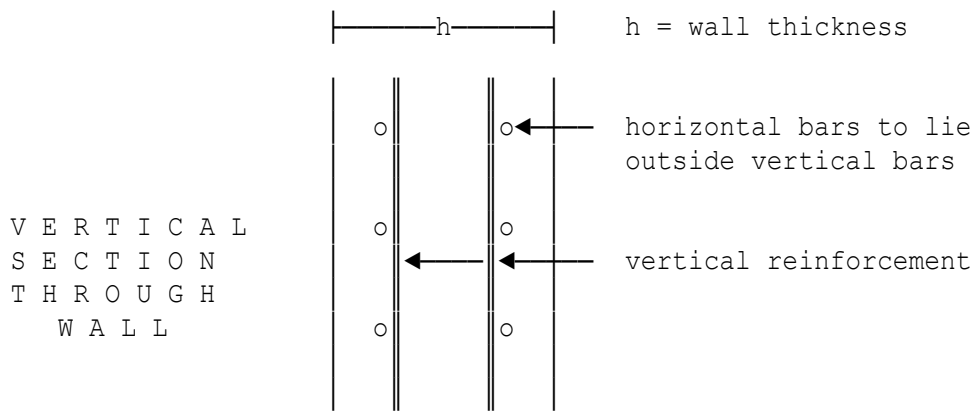

Char yield strength of reinf'ment fyk=500 N/mm²
Number of rows of bars (1 or 2) rows=1
Vertical bar diameter dia=12 mm
Horizontal bar diameter dial=10 mm

Section properties

Wall thickness h=120 mm
Length of wall section b=1000 mm
Depth of comp.reinforcement d2=45 mm

Loading details

Clear height between restraints l=3.5 m
Design ultimate axial load N=300 kN/m
Larger initial end mt.(positive) M2=12 kNm/m
Smaller initial end moment M1=0 kNm/m

Slenderness (EC2 Clause 5.8.3.2)

About Y-Y axis:
Wall is considered to be braced about the stronger axis.
Fixity condition at top (1-3) cty=1
Fixity condition at bottom (1-3) cby=1
About Z-Z axis:
Wall is considered to be braced about the weaker axis.
Fixity condition at top (1-2) ctz=1
Fixity condition at bottom (1-2) cbz=1
For Y-Y stronger axis:
Slenderness lamy=loy/iy=9.0933

Axial resistance Nrd=33.425 kN per metre.

Location: EX4 - Plain concrete wall

Design of concrete walls containing reinforcement to EC2

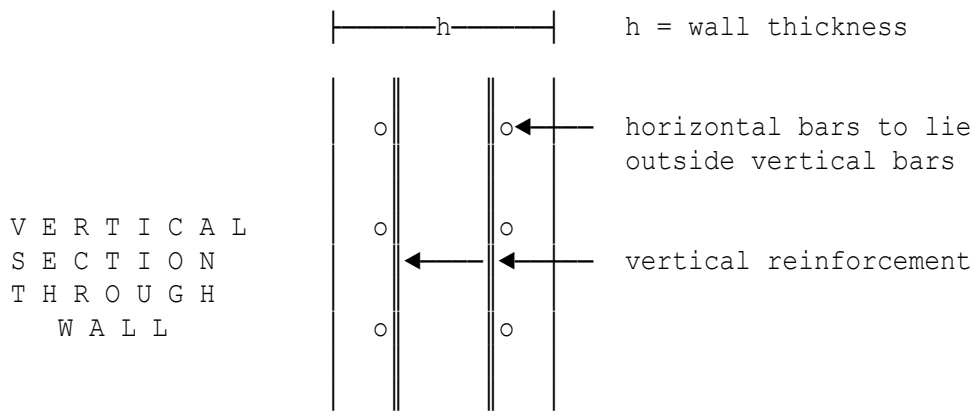

Char yield strength of reinf'ment fyk=500 N/mm²
Number of rows of bars (1 or 2) rows=2
Vertical bar diameter dia=10 mm
Horizontal bar diameter dial=10 mm

Section properties

Wall thickness h=300 mm
Length of wall section b=1000 mm
Depth of comp.reinforcement d2=50 mm

Loading details

Clear height between restraints l=3.5 m
Design ultimate axial load N=2000 kN/m
Larger initial end mt.(positive) M2=10 kNm/m
Smaller initial end moment M1=0 kNm/m

Slenderness (EC2 Clause 5.8.3.2)

About Y-Y axis:
Wall is considered to be braced about the stronger axis.
Fixity condition at top (1-3) cty=2
Fixity condition at bottom (1-3) cby=2
About Z-Z axis:
Wall is considered to be braced about the weaker axis.
Fixity condition at top (1-2) ctz=2
Fixity condition at bottom (1-2) cbz=2
For Y-Y stronger axis:
Slenderness lamy=loy/iy=10.306

Axial resistance Nrd=1950.5 kN per metre.

Location: Ex5 - RC Wall

Design of concrete walls containing reinforcement to EC2

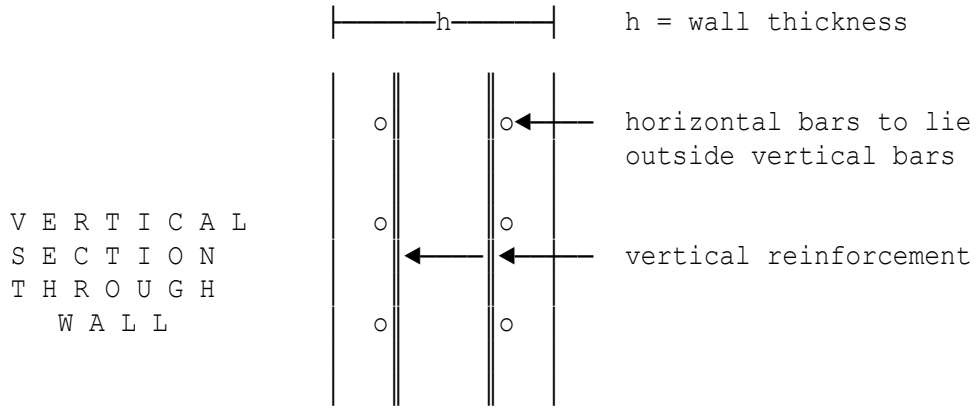

Char yield strength of reinf'ment fyk=500 N/mm²
Number of rows of bars (1 or 2) rows=2
Vertical bar diameter dia=25 mm
Horizontal bar diameter dial=10 mm

Section properties

Wall thickness h=250 mm
Length of wall section b=1000 mm
Depth of comp.reinforcement d2=58 mm

Loading details

Clear height between restraints l=3.5 m
Design ultimate axial load N=3000 kN/m
Larger initial end mt.(positive) M2=100 kNm/m
Smaller initial end moment M1=0 kNm/m

Slenderness (EC2 Clause 5.8.3.2)

About Y-Y axis:
Wall is considered to be braced about the stronger axis.
Fixity condition at top (1-3) cty=3
Fixity condition at bottom (1-3) cby=3
About Z-Z axis:
Wall is considered to be braced about the weaker axis.
Fixity condition at top (1-3) ctz=3
Fixity condition at bottom (1-3) cbz=3
For Y-Y stronger axis:
Slenderness lamy=loy/iy=12.124

Design moments (Clause 5.8.8.2)

The design moment is taken as the maximum of:

Mo2=126.25E6 Nmm
MEd1=Moe+M2=156.98E6 Nmm
MEd2=Mo1+0.5*M2=61.613E6 Nmm

Design Moment MEd=156.98E6 Nmm

Axial load and moment considerations

Effective/overall-depth ratio	d2h=d2/h=0.232
Axial load ratio	Nrat=NEd/(b*h*fck)=0.48
Moment ratio	Mrat=MEd/(b*h^2*fck)=0.10047

Longitudinal reinforcement

Chart data for rectangular columns is taken from 'The Concrete Centre' publication entitled 'Worked Examples to Eurocode 2: Volume 1'.

Area of steel required	As=val*fck/fyk*b*h=3891.8 mm²/m
Number of bars provided	nbars=8 /m

DESIGN SUMMARY

Wall thickness	**250 mm**
Clear wall height	**3.5 m**
Design axial load	**3000 kN/m**
Design BM (Z-Z axis)	**156.98 kNm/m**
Vert.reinft.diameter	**25 mm**
Area of steel required	**3891.8 mm²/m**
Area of steel provided	**3927 mm²/m**
Horiz.reinft.diameter	**10 mm**
Horiz.reinft.spacing	**400 mm**

Location: Ex6 - Example p175 from TCC Worked Examples - EC2:Volume 1

Design of concrete walls containing reinforcement to EC2

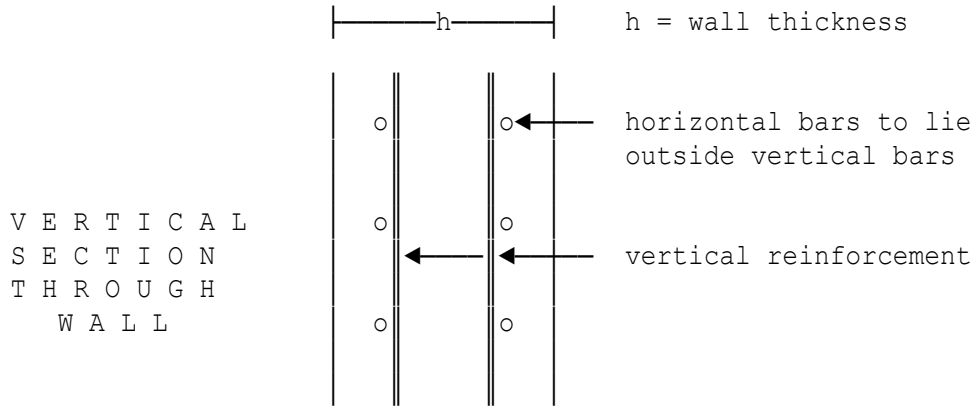

Char yield strength of reinf'ment fyk=500 N/mm²
Number of rows of bars (1 or 2) rows=2
Vertical bar diameter dia=16 mm
Horizontal bar diameter dial=10 mm

Section properties

Wall thickness h=200 mm
Length of wall section b=1000 mm
Depth of comp.reinforcement d2=43 mm

Loading details

Clear height between restraints l=3.1 m
Design ultimate axial load N=1149.4 kN/m
Larger initial end mt.(positive) M2=31.6 kNm/m
Smaller initial end moment M1=0 kNm/m

Slenderness (EC2 Clause 5.8.3.2)

About Y-Y axis:
Wall is considered to be braced about the stronger axis.
Fixity condition at top (1-3) cty=1
Fixity condition at bottom (1-3) cby=1
About Z-Z axis:
Wall is considered to be braced about the weaker axis.
Fixity condition at top (1-3) ctz=1
Fixity condition at bottom (1-3) cbz=1
For Y-Y stronger axis:
Slenderness lamy=loy/iy=8.054

Design moments (Clause 5.8.8.2)

Design moment	MEd=Mo2=38.281E6 Nmm

Axial load and moment considerations

Effective/overall-depth ratio	d2h=d2/h=0.215
Axial load ratio	Nrat=NEd/(b*h*fck)=0.19157
Moment ratio	Mrat=MEd/(b*h^2*fck)=0.031901

Longitudinal reinforcement

Chart data for rectangular columns is taken from 'The Concrete Centre' publication entitled 'Worked Examples to Eurocode 2: Volume 1'.

Area of steel required	As=val*fck/fyk*b*h=0 mm²/m
Minimum permitted area of steel	Asmin=0.002*b*h=400 mm²/m
Provide minimum steel	As=Asmin=400 mm²/m
Number of bars provided	nbars=6 /m

DESIGN SUMMARY

Wall thickness	**200 mm**
Clear wall height	**3.1 m**
Design axial load	**1149.4 kN/m**
Design BM (Z-Z axis)	**38.281 kNm/m**
Vert.reinft.diameter	**16 mm**
Area of steel required	**400 mm²/m**
Area of steel provided	**1206.4 mm²/m**
Horiz.reinft.diameter	**10 mm**
Horiz.reinft.spacing	**400 mm**

Location: Ex1 - Thin wall, HY steel,high moment, no concrete splay

Calculation of reinforcement for wall-to-wall intersections

Calculations are in accordance with BS8110-1:1997.

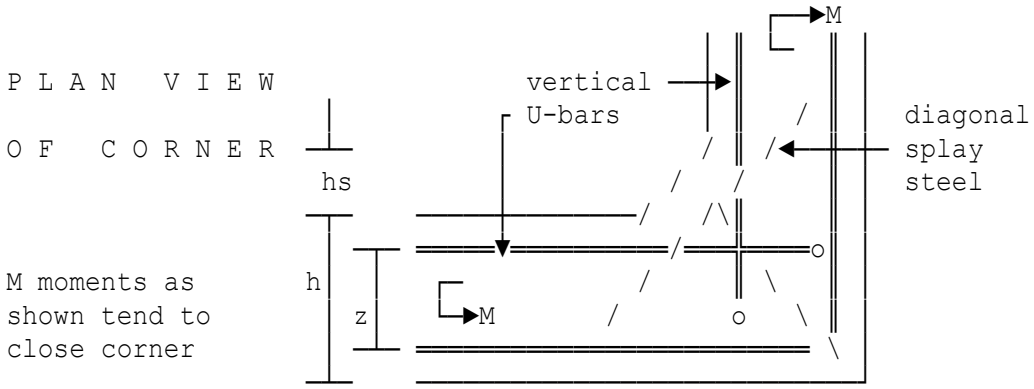

Concrete grade	fcu=30 N/mm²
Main steel strength	fy=500 N/mm²
Ultimate moment	M=125 kNm/m
Overall wall thickness	h=150 mm
Depth of splay (if provided)	hs=0 mm
Bar diameter	dia=25 mm
Partial safety factor for steel	gamS=1.15

Cover to bars

Designated exposure class is XC2

Specified fixing tolerance	tol=10 mm
Cover to main bars	c=35 mm
Distance between bar centres	z=h-2*c-dia=55 mm
Effective depth	d=h-c-dia/2=102.5 mm
Extra eff.depth due to splay	a=hs+c+dia/2=47.5 mm

Method based on data given in 'Reinforcement detailing of frame corner joints' by P.S. Balint & H.P.J. Taylor (C&CA pub. 42.462. 1972).

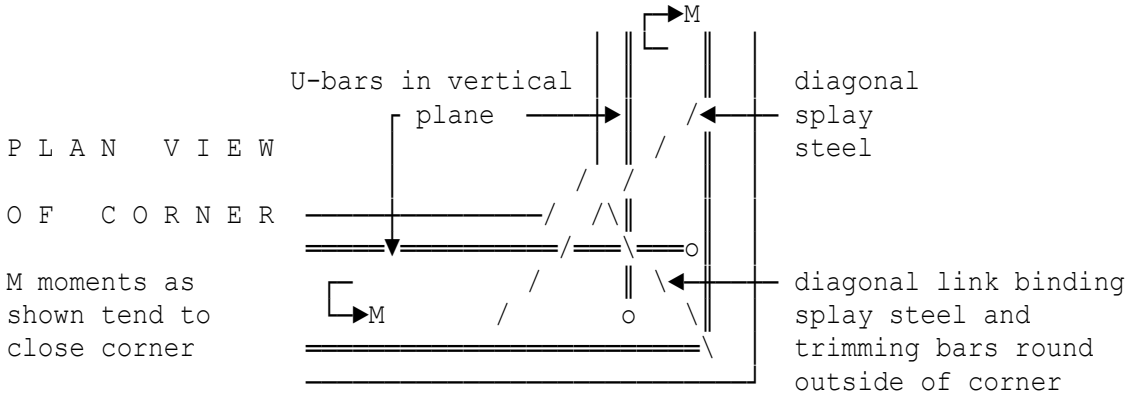

Main steel

Steel area required	Ast=M*1E6/(fy/gamS*z)=5227.3 mm²/m
Limiting bar spacing (c.to c.)	SMax=5*INT((dia+3*d)/5)=330 mm
Chosen bar spacing	space1=90 mm
Area of main steel provided	Astpro=PI/4*dia*dia*1000/space1 =5454.2 mm²/m

Splay reinforcement

Although a splay is not provided within the corner, diagonal bars will still be included within the corner itself.
Calculated area of splay reinforcement:
Ass=SQR(2)*(M*1E6-0.6*Ast*fy/gamS*z)/(fy/gamS*(a+z))=1586.7 mm²

Chosen size of splay bar	diS1=16 mm
Area of splay bars provided	Asspro=PI/4*diS1^2*1000/space1 =2234 mm²/m

Link reinforcement

Link steel strength	fyv=500 N/mm²
Minimum permissible link steel	Asv=0.6*fy*Ast/fyv=3136.4 mm²/m
Chosen size of link	Ldia=20

Provide 5 No/20 mm size links at corner.
Minimum radius of bend in U-bars according to C&CA Report:
MinRad=0.35*dia*fy/fcu*(5*dia+2*c)/(dia+2*c)
=299.34 mm

DESIGN SUMMARY

Area of main steel required	**5227.3 mm² per metre**
Area of main steel provided	**5454.2 mm² per metre**
Percentage of main steel provided	**3.6361 %**
Area of splay steel required	**1586.7 mm² per metre**
Area of splay steel provided	**2234 mm² per metre**
Area of link steel required	**3136.4 mm² per metre**
Area of link steel provided	**3141.6 mm² per metre**

Main steel : 25 mm bars at 90 mm centres (5454.2 mm²/m)
Splay steel: 16 mm bars at 90 mm centres (2234 mm²/m)
Link steel : 5 No/20 mm links/metre (3141.6 mm²/m)

Ratio of splay steel/main steel required	**0.30354**
Ratio of splay steel/main steel provided	**0.4096**
Minimum radius of bend for main U-bars	**300 mm**

Location: Ex2 - Thick wall, mild steel, low moment w. concrete splay

Calculation of reinforcement for wall-to-wall intersections

Calculations are in accordance with BS8110-1:1997.

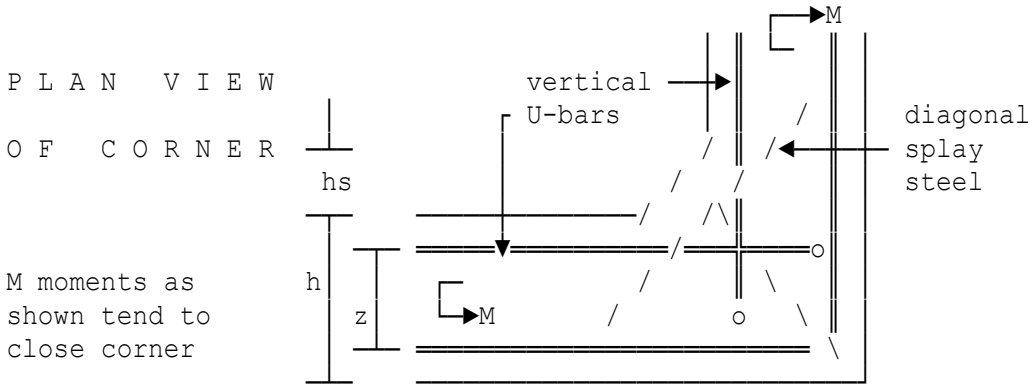

Concrete grade	fcu=30 N/mm²
Main steel strength	fy=250 N/mm²
Ultimate moment	M=30 kNm/m
Overall wall thickness	h=1000 mm
Depth of splay (if provided)	hs=250 mm
Bar diameter	dia=25 mm
Partial safety factor for steel	gamS=1.15

Cover to bars

Designated exposure class is XC2

Specified fixing tolerance	tol=10 mm
Cover to main bars	c=40 mm
Distance between bar centres	z=h-2*c-dia=895 mm
Effective depth	d=h-c-dia/2=947.5 mm
Extra eff.depth due to splay	a=hs+c+dia/2=302.5 mm

Noor formula 1

This design method is based on an article by Dr F.A. Noor, which appeared in 'Concrete' in July 1977.

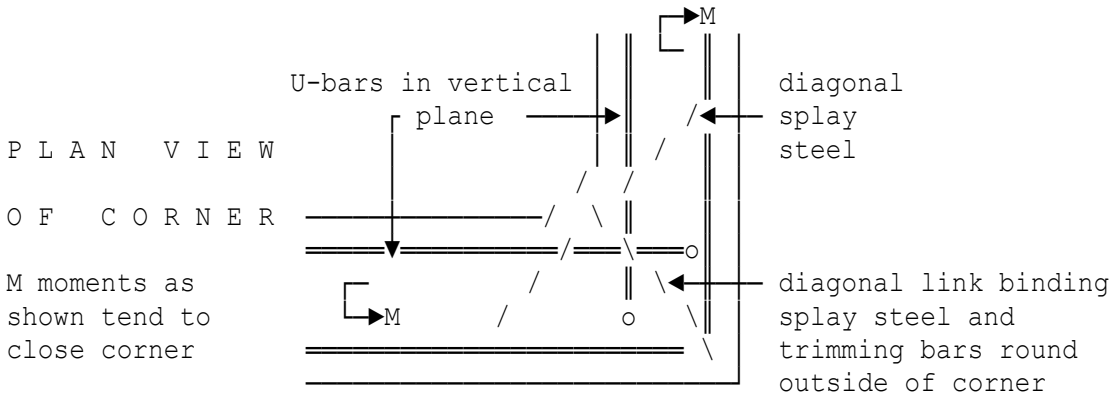

Main steel

```
Chosen ratio of splay/main steel  ratio=0.5
Area of main steel required:
compute                          c1=(10200000*M-1000*d^2*SQR(fcu))
                                   =-4.6112E9
compute                          c2=(d*(350*SQR(fcu)+3.11*ratio*fy))
                                   =2.1847E6
Area of main steel required      Ast=c1/c2=-2110.7 mm²/m
Limiting bar spacing (c.to c.)    SMax=5*INT((dia+SMax)/5)=625 mm
Chosen bar spacing                space2=120 mm
Area of main steel provided       Astpro=PI/4*dia*dia*1000/space2
                                        =4090.6 mm²/m
```

Splay reinforcement

```
Area of splay steel required      Ass=ratio*Ast=2000 mm²/m
Chosen size of splay bar          diS2=20 mm
Area of splay bars provided       Asspro=PI/4*diS2^2*1000/space2
                                        =2618 mm²/m
```

DESIGN SUMMARY

Area of main steel required	**4000 mm² per metre**
Area of main steel provided	**4090.6 mm² per metre**
Percentage of main steel provided	**0.40906 %**
Area of splay steel required	**2000 mm² per metre**
Area of splay steel provided	**2618 mm² per metre**
Main steel : 25 mm bars at 120 mm centres	**(4090.6 mm²/m)**
Splay steel: 20 mm bars at 120 mm centres	**(2618 mm²/m)**
Ratio of splay steel/main steel required	**0.5**
Ratio of splay steel/main steel provided	**0.64**
Minimum radius of bend for main U-bars	**145 mm**

Location: Ex3 - Medium wall, HY steel, with concrete splay

Calculation of reinforcement for wall-to-wall intersections

Calculations are in accordance with BS8110-1:1997.

Concrete grade	fcu=35 N/mm²
Main steel strength	fy=500 N/mm²
Ultimate moment	M=200 kNm/m
Overall wall thickness	h=500 mm
Depth of splay (if provided)	hs=250 mm
Bar diameter	dia=20 mm
Partial safety factor for steel	gamS=1.15

Cover to bars

Designated exposure class is XC3

Specified fixing tolerance	tol=10 mm
Cover to main bars	c=40 mm
Distance between bar centres	z=h-2*c-dia=400 mm
Effective depth	d=h-c-dia/2=450 mm
Extra eff.depth due to splay	a=hs+c+dia/2=300 mm

This design method is based on an article by Dr F.A. Noor, which appeared in 'Concrete' in July 1977.

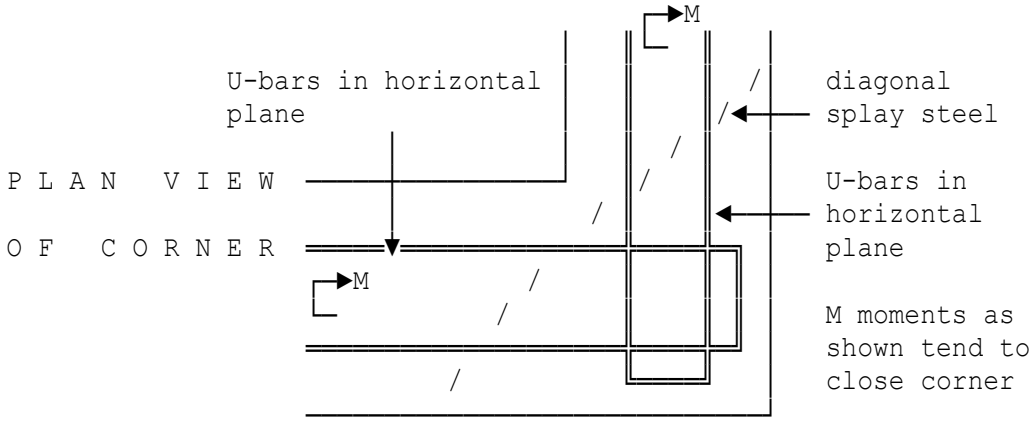

Main steel

Chosen ratio of splay/main steel	ratio=0.5
Area of main steel required=822.85 mm²/m.	
Chosen bar spacing	space3=155 mm
Area of main steel provided	Astpro=PI/4*dia*dia*1000/space3
	=2026.8 mm²/m

Splay reinforcement

Area of splay steel required	Ass=ratio*Ast=1000 mm²/m
Size of splay bar	diS3=16 mm
Area of splay bars provided	Asspro=PI/4*diS3^2*1000/space3
	=1297.2 mm²/m

DESIGN SUMMARY

Area of main steel required	**2000 mm² per metre**
Area of main steel provided	**2026.8 mm² per metre**
Percentage of main steel provided	**0.40537 %**
Area of splay steel required	**1000 mm² per metre**
Area of splay steel provided	**1297.2 mm² per metre**
Main steel : 20 mm bars at 155 mm centres	**(2026.8 mm²/m)**
Splay steel: 16 mm bars at 155 mm centres	**(1297.2 mm²/m)**
Ratio of splay steel/main steel required	**0.5**
Ratio of splay steel/main steel provided	**0.64**
Minimum radius of bend for main U-bars	**180 mm**

Location: Ex1 - Thin wall, HY steel,high moment, no concrete splay

Calculation of reinforcement for wall-to-wall intersections

The detail below entails intersecting pairs of vertical U-bars together with diagonal splay bars and diagonal links binding splay reinforcement and trimming bars round outside of corner (if required). Calculations are in accordance with BS EN 1992-1-1.

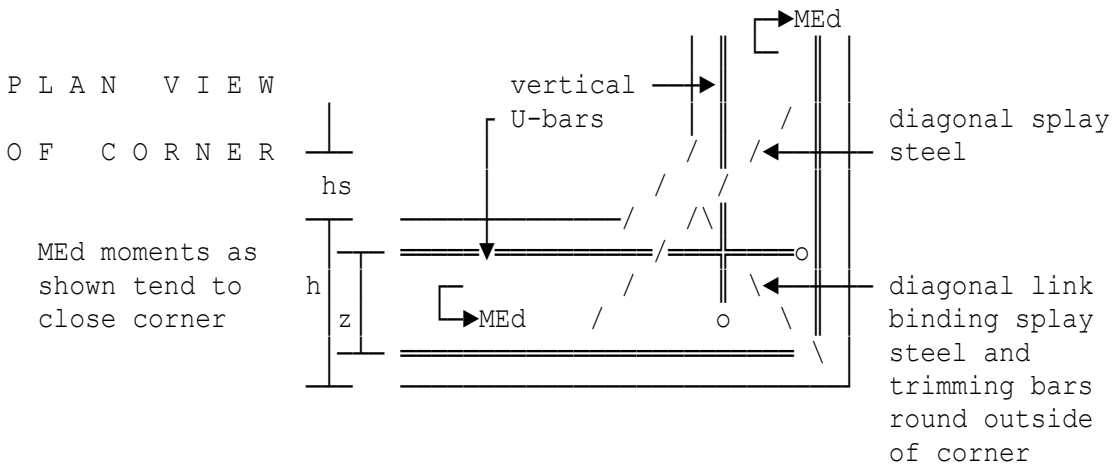

Design data

Char yield strength of r'ment	fyk=500 N/mm²
Design moment	MEd=125 kNm/m
Overall wall thickness	h=150 mm
Depth of splay (if provided)	hs=0 mm
Bar diameter (vertical U-bars)	dia=25 mm
Partial safety factor for steel	gamS=1.15

Cover to main reinforcement

Distance between bar centres	z=h-2*c-dia=55 mm
Effective depth	d=h-c-dia/2=102.5 mm
Extra eff.depth due to splay	a=hs+c+dia/2=47.5 mm

Design method by C&CA (basic detail)

Method based on data given in 'Reinforcement detailing of frame corner joints' by P.S. Balint & H.P.J. Taylor (C&CA pub. 42.462. 1972).

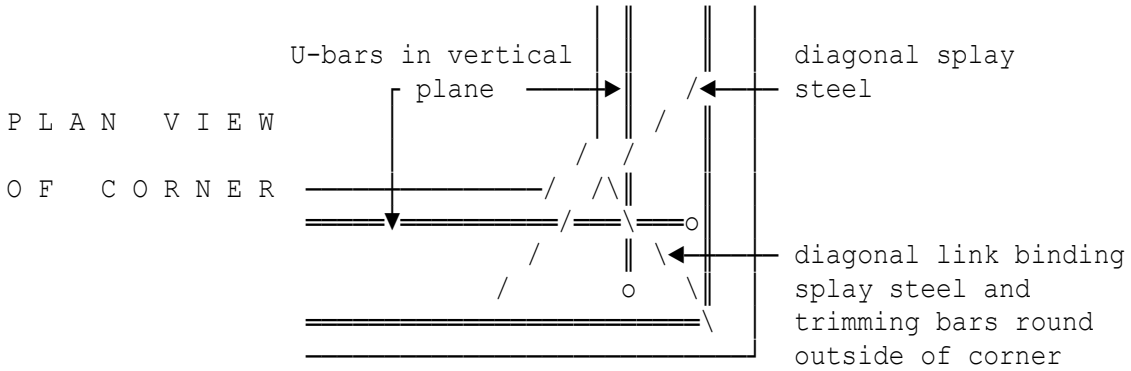

Main steel

Absolute maximum permitted clear bar spacing is 400 mm.
Limiting bar spacing (c.to c.) SMax=5*INT((dia+3*d)/5)=330 mm
Maximum allowable bar spacing to accommodate steel required=90 mm
Chosen bar spacing space1=90 mm
Area of main steel provided Astpro=PI/4*dia*dia*1000/space1
=5454.2 mm²/m
Corresponding steel percentage perpro=100*Astpro/(1000*h)=3.6361 %

Splay reinforcement

Although a splay is not provided within the corner, diagonal bars will still need to be included within the corner itself.
Calculated area of splay reinforcement:
Ass=SQR(2)*(MEd*1E6-0.6*Ast*fyk/gamS*z)/(fyk/gamS*(a+z))=1586.7 mm²
Chosen size of splay bar diS1=16 mm
Area of splay bars provided Asspro=PI/4*diS1^2*1000/space1
=2234 mm²/m

Link reinforcement

Link steel strength fyv=500 N/mm²
Minimum permissible link steel Asv=0.6*fyk*Ast/fyv=3136.4 mm²/m
Number of links required per metre 5 No.
Chosen size of link Ldia=20
Provide 5 No/20 mm size links at corner.
Area of link steel provided Asvpro=Ldia*Ldia*PI*NumLink/2
=3141.6 mm²/m
Minimum radius of bend in U-bars according to C&CA Report:
MinRad=0.35*dia*fyk/fcu*(5*dia+2*c)/(dia+2*c)
=299.34 mm
Min.radius of bend for main U-bars=300 mm.

DESIGN SUMMARY

Area of main steel required	**5227.3 mm² per metre**
Area of main steel provided	**5454.2 mm² per metre**
Percentage of main steel provided	**3.6361 %**
Area of splay steel required	**1586.7 mm² per metre**
Area of splay steel provided	**2234 mm² per metre**
Area of link steel required	**3136.4 mm² per metre**
Area of link steel provided	**3141.6 mm² per metre**

Main steel : 25 mm bars at 90 mm centres (5454.2 mm²/m)
Splay steel: 16 mm bars at 90 mm centres (2234 mm²/m)
Link steel : 5 No/20 mm links/metre (3141.6 mm²/m)

Ratio of splay steel/main steel required	**0.30354**
Ratio of splay steel/main steel provided	**0.4096**
Minimum radius of bend for main U-bars	**300 mm**

Location: Ex2 - Thick wall, mild steel, low moment w. concrete splay

Calculation of reinforcement for wall-to-wall intersections

The detail below entails intersecting pairs of vertical U-bars together with diagonal splay bars and diagonal links binding splay reinforcement and trimming bars round outside of corner (if required). Calculations are in accordance with BS EN 1992-1-1.

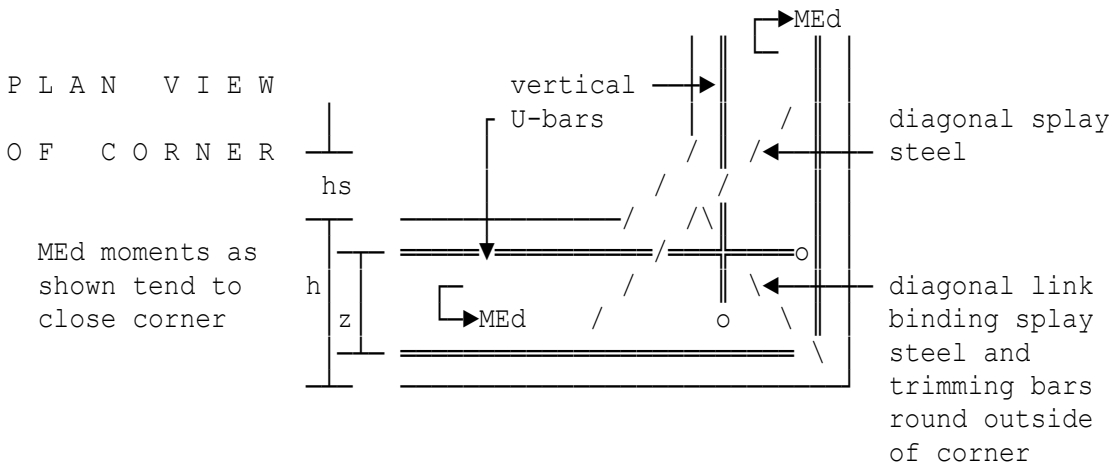

Design data

Char yield strength of r'ment	fyk=500 N/mm²
Design moment	MEd=30 kNm/m
Overall wall thickness	h=1000 mm
Depth of splay (if provided)	hs=250 mm
Bar diameter (vertical U-bars)	dia=25 mm
Partial safety factor for steel	gamS=1.15

Cover to main reinforcement

Cover to main bars	c=40 mm
Distance between bar centres	z=h-2*c-dia=895 mm
Effective depth	d=h-c-dia/2=947.5 mm
Extra eff.depth due to splay	a=hs+c+dia/2=302.5 mm

Design method by C&CA (basic detail)

Method based on data given in 'Reinforcement detailing of frame corner joints' by P.S. Balint & H.P.J. Taylor (C&CA pub. 42.462. 1972).

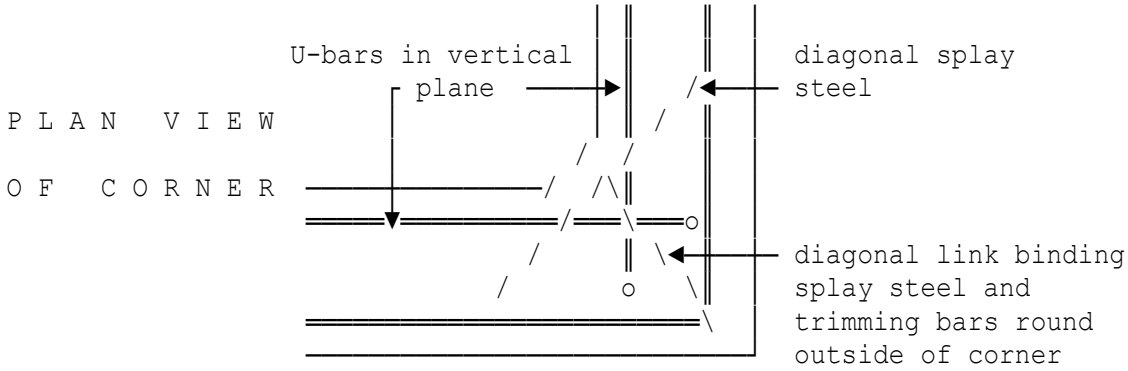

Main steel

Absolute maximum permitted clear bar spacing is 400 mm.
Maximum allowable bar spacing to accommodate steel required=245 mm
Chosen bar spacing space1=245 mm
Area of main steel provided Astpro=PI/4*dia*dia*1000/space1
=2003.6 mm²/m
Corresponding steel percentage perpro=100*Astpro/(1000*h)=0.20036 %

Splay reinforcement

Calculated area of splay reinforcement:
Ass=SQR(2)*(MEd*1E6-0.6*Ast*fyk/gamS*z)/(fyk/gamS*(a+z))
=-1186.9 mm²

Link reinforcement

Minimum radius of bend in U-bars according to C&CA Report:
MinRad=0.35*dia*fyk/fcu*(5*dia+2*c)/(dia+2*c)
=284.72 mm
Min.radius of bend for main U-bars=285 mm.

DESIGN SUMMARY

Area of main steel required	**2000 mm² per metre**
Area of main steel provided	**2003.6 mm² per metre**
Percentage of main steel provided	**0.20036 %**
Area of splay steel required	**See note below**
Main steel : 25 mm bars at 245 mm centres	**(2003.6 mm²/m)**
Ratio of splay steel/main steel required	**0**
Minimum radius of bend for main U-bars	**285 mm**

Location: Ex3 - Medium wall, HY steel, with concrete splay

Calculation of reinforcement for wall-to-wall intersections

The detail below entails intersecting pairs of vertical U-bars together with diagonal splay bars and diagonal links binding splay reinforcement and trimming bars round outside of corner (if required). Calculations are in accordance with BS EN 1992-1-1.

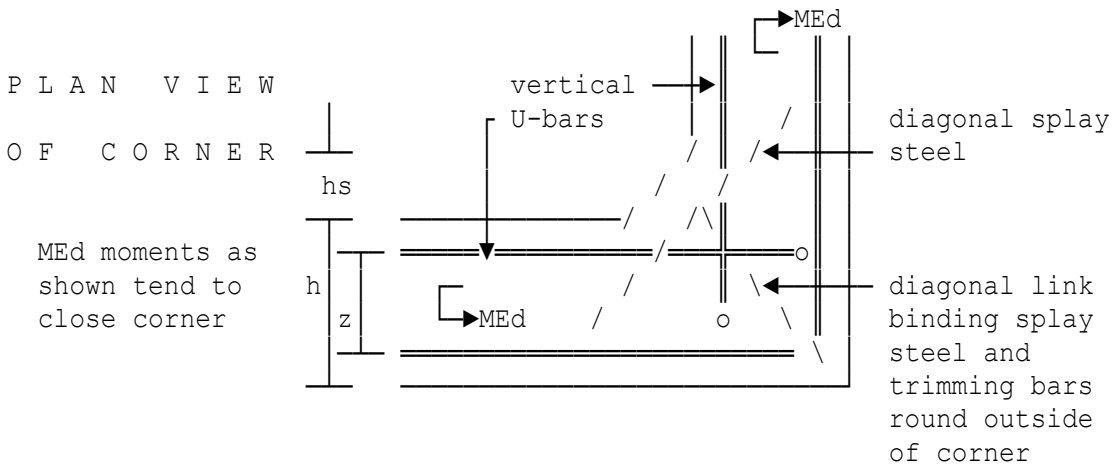

Design data

Char yield strength of r'ment	fyk=500 N/mm²
Design moment	MEd=300 kNm/m
Overall wall thickness	h=500 mm
Depth of splay (if provided)	hs=250 mm
Bar diameter (vertical U-bars)	dia=25 mm
Partial safety factor for steel	gamS=1.15

Cover to main reinforcement

Cover to main bars	c=30 mm
Distance between bar centres	z=h-2*c-dia=415 mm
Effective depth	d=h-c-dia/2=457.5 mm
Extra eff.depth due to splay	a=hs+c+dia/2=292.5 mm

Design method by C&CA (basic detail)

Method based on data given in 'Reinforcement detailing of frame corner joints' by P.S. Balint & H.P.J. Taylor (C&CA pub. 42.462. 1972).

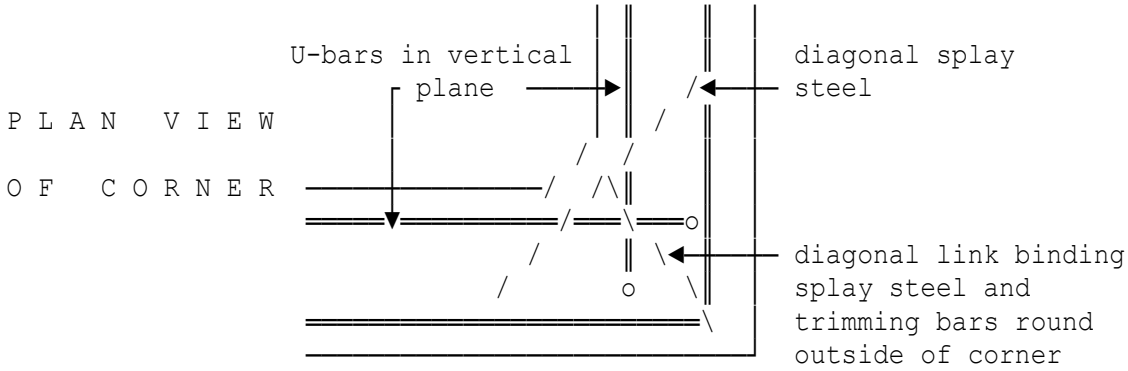

Main steel

Absolute maximum permitted clear bar spacing is 400 mm.
Limiting bar spacing (c.to c.) SMax=5*INT((dia+SMax)/5)=400 mm
Maximum allowable bar spacing to accommodate steel required=295 mm
Chosen bar spacing space1=295 mm
Area of main steel provided Astpro=PI/4*dia*dia*1000/space1
=1664 mm²/m
Corresponding steel percentage perpro=100*Astpro/(1000*h)=0.3328 %

Splay reinforcement

Calculated area of splay reinforcement:
Ass=SQR(2)*(MEd*1E6-0.6*Ast*fyk/gamS*z)/(fyk/gamS*(a+z))=551.69 mm²
Chosen size of splay bar diS1=16 mm
Area of splay bars provided Asspro=PI/4*diS1^2*1000/space1
=681.57 mm²/m

Link reinforcement

Minimum radius of bend in U-bars according to C&CA Report:
MinRad=0.35*dia*fyk/fcu*(5*dia+2*c)/(dia+2*c)
=272.06 mm
Min.radius of bend for main U-bars=275 mm.

DESIGN SUMMARY

Area of main steel required	**1662.7 mm² per metre**
Area of main steel provided	**1664 mm² per metre**
Percentage of main steel provided	**0.3328 %**
Area of splay steel required	**551.69 mm² per metre**
Area of splay steel provided	**681.57 mm² per metre**
Main steel : 25 mm bars at 295 mm centres	**(1664 mm²/m)**
Splay steel: 16 mm bars at 295 mm centres	**(681.57 mm²/m)**
Ratio of splay steel/main steel required	**0.33182**
Ratio of splay steel/main steel provided	**0.4096**
Minimum radius of bend for main U-bars	**275 mm**

Location: Ex4 - Using Noor formula 1

Calculation of reinforcement for wall-to-wall intersections

The detail below entails intersecting pairs of vertical U-bars together with diagonal splay bars and diagonal links binding splay reinforcement and trimming bars round outside of corner (if required). Calculations are in accordance with BS EN 1992-1-1.

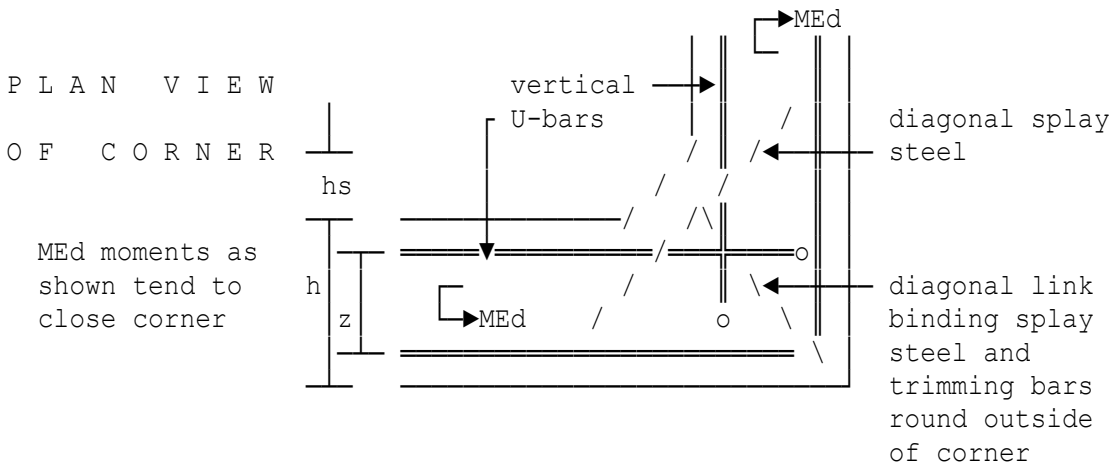

Design data

Char yield strength of r'ment	fyk=500 N/mm²
Design moment	MEd=30 kNm/m
Overall wall thickness	h=1000 mm
Depth of splay (if provided)	hs=250 mm
Bar diameter (vertical U-bars)	dia=25 mm
Partial safety factor for steel	gamS=1.15

Cover to main reinforcement

Cover to main bars	c=40 mm
Distance between bar centres	z=h-2*c-dia=895 mm
Effective depth	d=h-c-dia/2=947.5 mm
Extra eff.depth due to splay	a=hs+c+dia/2=302.5 mm

Design method using Noor formula 1

This calculation deals with the design of the reinforcement to resist bending at wall-to-wall intersections where the design moment tends to 'open' the corner. Tests have shown that many details fail at well below their calculated strength, and the concrete details described in this proforma have been developed to overcome this problem. The design method adopted here is based on an article by Dr F.A. Noor, which appeared in a publication entitled 'Concrete' in July 1977.

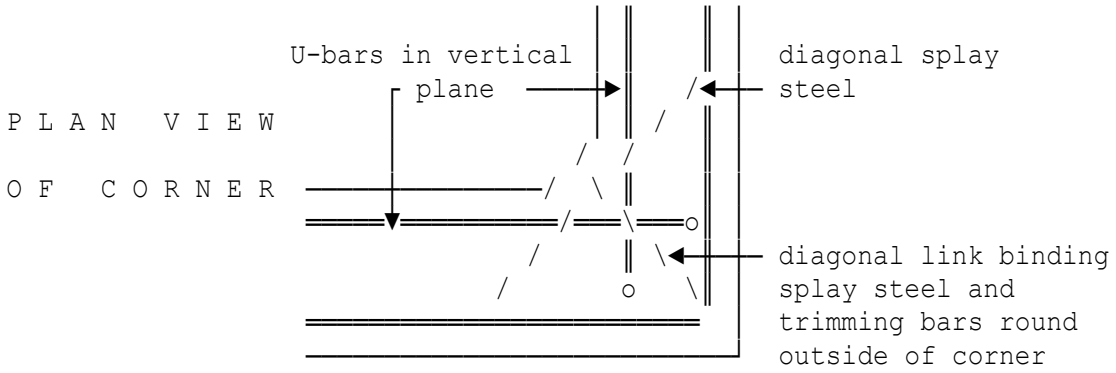

Main steel

Chosen ratio of splay/main steel ratio=0.5
Area of main steel required:
compute c1=(10200000*MEd-1000*d^2*SQR(fcu))
  =-4.6112E9
compute c2=(d*(350*SQR(fcu)+3.11*ratio*fyk))
  =2.5531E6
Area of main steel required Ast=c1/c2=-1806.1 mm²/m
Maximum allowable bar spacing=245 mm
Chosen bar spacing space2=245 mm
Area of main steel provided Astpro=PI/4*dia*dia*1000/space2
  =2003.6 mm²/m

Splay reinforcement

Area of splay steel required Ass=ratio*Ast=1000 mm²/m
Chosen size of splay bar diS2=20 mm
Area of splay bars provided Asspro=PI/4*diS2^2*1000/space2
  =1282.3 mm²/m

Link reinforcement

Minimum radius of bend in U-bars according to C&CA Report:
MinRad=0.35*dia*fyk/fcu*(5*dia+2*c)/(dia+2*c)
=284.72 mm
Min.radius of bend for main U-bars=285 mm.

DESIGN SUMMARY

Area of main steel required	**2000 mm² per metre**
Area of main steel provided	**2003.6 mm² per metre**
Percentage of main steel provided	**0.20036 %**
Area of splay steel required	**1000 mm² per metre**
Area of splay steel provided	**1282.3 mm² per metre**
Main steel : 25 mm bars at 245 mm centres	**(2003.6 mm²/m)**
Splay steel: 20 mm bars at 245 mm centres	**(1282.3 mm²/m)**
Ratio of splay steel/main steel required	**0.5**
Ratio of splay steel/main steel provided	**0.64**
Minimum radius of bend for main U-bars	**285 mm**

Location: Ex5 - Using Noor formula 2

Calculation of reinforcement for wall-to-wall intersections

The detail entails intersecting pairs of horizontal U-bars together with diagonal splay bars. This design method is based on an article by Dr F.A. Noor, published in 'Concrete' in July 1977. Calculations are in accordance with BS EN 1992-1-1.

Design data

Char yield strength of r'ment	fyk=500 N/mm²
Design moment	MEd=300 kNm/m
Overall wall thickness	h=600 mm
Depth of splay (if provided)	hs=250 mm
Bar diameter (horizontal U-bars)	dia=20 mm
Partial safety factor for steel	gamS=1.15

Cover to main reinforcement

Cover to main bars	c=30 mm
Distance between bar centres	z=h-2*c-dia=520 mm
Effective depth	d=h-c-dia/2=560 mm
Extra eff.depth due to splay	a=hs+c+dia/2=290 mm

This design method is based on an article by Dr F.A. Noor, which appeared in 'Concrete' in July 1977.

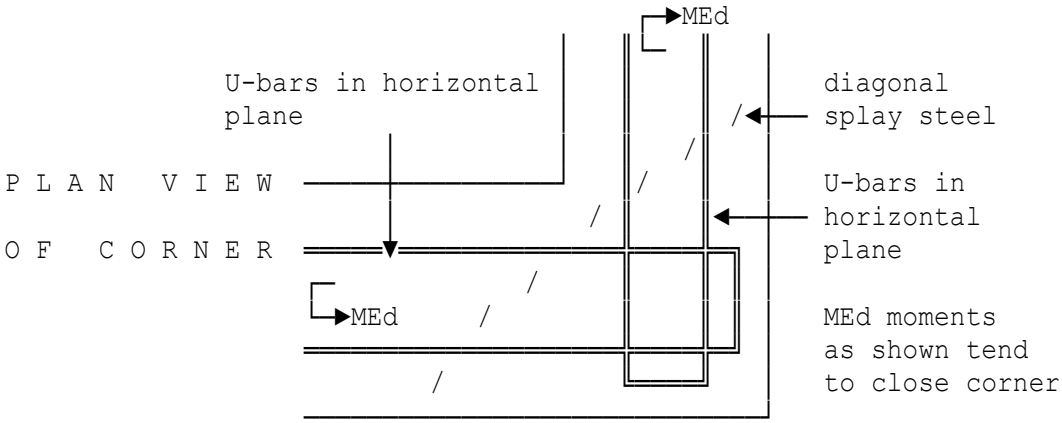

Main steel

Chosen ratio of splay/main steel	ratio=0.5
Area of main steel required=973.14 mm²/m.	
Maximum allowable bar spacing	260 mm
Chosen bar spacing	space3=260 mm
Area of main steel provided	Astpro=PI/4*dia*dia*1000/space3
	=1208.3 mm²/m

Splay reinforcement

Area of splay steel required	Ass=ratio*Ast=600 mm²/m
Size of splay bar	diS3=16 mm
Area of splay bars provided	Asspro=PI/4*diS3^2*1000/space3 =773.32 mm²/m

DESIGN SUMMARY

Area of main steel required	**1200 mm² per metre**
Area of main steel provided	**1208.3 mm² per metre**
Percentage of main steel provided	**0.20138 %**
Area of splay steel required	**600 mm² per metre**
Area of splay steel provided	**773.32 mm² per metre**
Main steel : 20 mm bars at 260 mm centres	**(1208.3 mm²/m)**
Splay steel: 16 mm bars at 260 mm centres	**(773.32 mm²/m)**
Ratio of splay steel/main steel required	**0.5**
Ratio of splay steel/main steel provided	**0.64**
Minimum radius of bend for main U-bars	**200 mm**

Location: Medium-sized section. Low shear force.

Shear in rectangular and flanged beams, with choice of av enhancement

The shear calculations are in accordance with the requirements of Clause 3.4.5

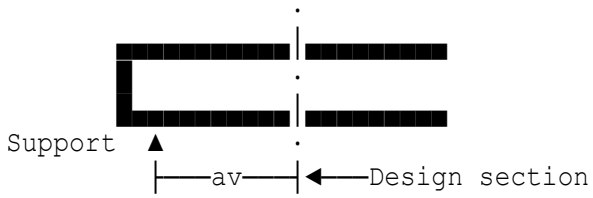

Design to BS8110(1997) with partial safety factor for steel gammaS=1.15
It is assumed that nominal shear reinforcement at least will be provided

Shear force due to ultimate loads	V=400 kN
Overall depth of section	h=550 mm
Effective depth of section	d=500 mm
Effective breadth for shear	bv=200 mm
Characteristic concrete strength	fcu=40 N/mm²
Distance to support	av=500 mm
Diameter of compression bars	diac=0 mm
Diameter of tension bars	dia=25 mm
Diameter of link legs	dial=8 mm
Number of tension bars at section	nbars=2
Char.strength of link steel	fyv=500 N/mm²
Number of legs to be provided	nlegs=4

Use 8 mm links (4 legs), spaced at 170 mm centres along beam.
Approx.total weight of links 5.8 kg per metre

Location: Large section. High shear force. High-yield steel.

Shear in rectangular and flanged beams, with choice of av enhancement

The shear calculations are in accordance with the requirements of Clause 3.4.5

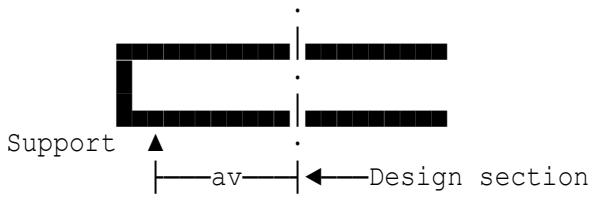

Design to BS8110(1997) with partial safety factor for steel gammaS=1.15
It is assumed that nominal shear reinforcement at least will be provided
Shear force due to ultimate loads V=7000 kN
Overall depth of section h=1500 mm
Effective depth of section d=1450 mm
Effective breadth for shear bv=1000 mm
Characteristic concrete strength fcu=40 N/mm²
Distance to support av=3000 mm
Diameter of compression bars diac=25 mm
Diameter of tension bars dia=40 mm
Diameter of link legs dial=10 mm
Number of tension bars at section nbars=12
Char.strength of link steel fyv=500 N/mm²
Since bv exceeds 350 mm, note the condition in Clause 3.4.5.5 that no longitudinal bar should be more than 150 mm from a vertical leg.
Number of legs to be provided nlegs=10

Use 10 mm links (10 legs), spaced at 80 mm centres along beam.
Approx.total weight of links 159.5 kg per metre

Location: Small section. High shear enhancement.

Shear in rectangular and flanged beams, with choice of av enhancement

The shear calculations are in accordance with the requirements of Clause 3.4.5

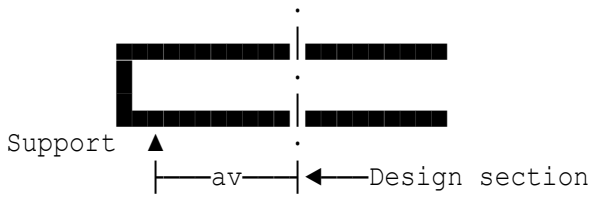

Design to BS8110(1997) with partial safety factor for steel gammaS=1.15
It is assumed that nominal shear reinforcement at least will be provided
Shear force due to ultimate loads V=25 kN
Overall depth of section h=100 mm
Effective depth of section d=75 mm
Effective breadth for shear bv=75 mm
Characteristic concrete strength fcu=35 N/mm²
Distance to support av=25 mm
Diameter of compression bars diac=0 mm
Diameter of tension bars dia=12 mm
Diameter of link legs dial=8 mm
Number of tension bars at section nbars=2
Char.strength of link steel fyv=500 N/mm²
Number of legs to be provided nlegs=2
Proposed spacing sv greater than 0.75*d= 0.75*75 =56.25 mm
Reset link spacing to limiting value of 50 mm (rounded).

Use 8 mm links (two legs), spaced at 50 mm centres along beam.
Approx.total weight of links 1.8 kg per metre

Location: Ex1 - Default example

Shear in rectangular and flanged beams

Design shear force	VEd=345 kN
Overall depth of section	h=600 mm
Effective depth of section	d=550 mm
Effective breadth for shear	bw=350 mm
Char yield strength (reinf'ment)	fyk=500 N/mm²
Diameter of links	dial=10 N/mm²

Shear reinforcement

Design shear stress	vEd=VEd*10^3/(0.9*bw*d)=1.9913 N/mm²
Concrete strut strength	vRdm=0.124*fck*(1-fck/250) =3.2736 N/mm²
Angle of inclination of strut	theta'=22°
Number of shear legs	nsl=2
Area of shear legs	Asw=nsl*PI/4*dial^2=157.08 mm²
Spacing of links	smax=INT(Asw/Asw's)=244 mm
Chosen spacing	s=225 mm

Check crushing strength

Angle of inclination of strut theta'=22°
compute comp=cot(θ)=1/tan(θ)=2.4751
Maximum shear resistance:
VRdmax=0.36*bw*d*(1-fck/250)*fck/((comp+1/comp)*1000)=635.45 kN
As VEd ≤ VRdmax (345 kN ≤ 635.45 kN), design shear force OK.

SHEAR SUMMARY		
	Shear force	**345 kN**
	Design shear strength	**1.9913 N/mm²**
	Concrete strut capacity	**3.2736 N/mm²**
	Area/spacing ratio	**0.64121**
	Area of links	**157 mm²**
	Maximum spacing	**244 mm**
	Actual spacing	**225 mm**

Location: Typical continuous slab reinforced with high-yield steel

Design of solid r.c. slabs reinforced in tension only.

Calculations for singly-reinforced slabs using formulae in Cl.3.4.4.4, i.e. assuming rectangular stress block and restricting NA depth to 0.4*d at supports (except supports to cantilevers) and 0.5*d near midspan (redistribution, if any, limited to 10%).

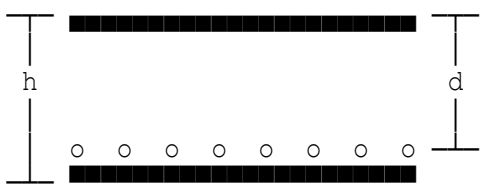

Design to BS8110(1997) with partial safety factor for steel gammaS=1.15
Section location: Near midspan of span with both ends continuous.

Ultimate moment (after redistr.)	M=350 kNm/m
Characteristic concrete strength	fcu=40 N/mm²
Characteristic strength of steel	fy=500 N/mm²
Diameter of tension bars	dia=20 mm
Designated exposure class is XC2	
Specified fixing tolerance	tol=10 mm
Nominal concrete cover	cover=35 mm
Overall thickness of slab	h=400 mm
Effective depth of section	d=355 mm
Chosen spacing of tension bars	pch=125 mm
Diameter of distribution bars	diamn=12 mm
Spacing of distribution bars	pchDA=200 mm

TENSION REINFORCEMENT SUMMARY	**Characteristic strength**	**500 N/mm²**
	Diameter of bars	**20 mm**
	Spacing of bars	**125 mm**
	Effective depth	**355 mm**
	Area of steel required	**2476.2 mm²/m**
	Area of steel provided	**2513 mm²/m**
	Percentage provided	**0.62825 %**
	Weight of steel provided	**19.73 kg/m²**
DISTRIBUTION REINFORCEMENT SUMMARY	**Characteristic strength**	**500 N/mm²**
	Diameter of bars	**12 mm**
	Spacing of bars	**200 mm**
	Depth to bar centres	**339 mm**
	Area of steel required	**520 mm²/m**
	Area of steel provided	**565 mm²/m**
	Percentage provided	**0.14125 %**
	Weight of steel provided	**4.44 kg/m²**

Check on span/effective-depth ratio

Basic ratio for continuous slab	bs'd=26 (see Table 3.9)
Area of tension steel provided	Aspr=2513 mm²
Service stress in this steel	fs=2*fy*As/(3*Aspr)=328.45 N/mm²
Mod.factor for tension steel	modf1=0.88664
Mod.factor for no comp.steel	modf2=1.0
Maximum permissible span/effective-depth ratio	ps'd=bs'd*modf1*modf2=23.053
Effective span of slab	span=8 m
True span/effective-depth ratio	as'd=1000*span/d=22.535

As this does not exceed 23.053, this is Acceptable.

Location: Thick, heavily-loaded continuous slab, mild steel reinfmt.

Design of solid r.c. slabs reinforced in tension only.

Calculations for singly-reinforced slabs using formulae in Cl.3.4.4.4, i.e. assuming rectangular stress block and restricting NA depth to 0.4*d at supports (except supports to cantilevers) and 0.5*d near midspan (redistribution, if any, limited to 10%).

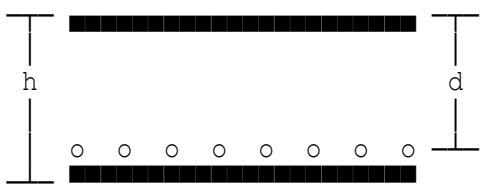

Design to BS8110(1997) with partial safety factor for steel gammaS=1.15
Section location: Near midspan of span with both ends continuous.

Ultimate moment (after redistr.)	M=2500 kNm/m
Characteristic concrete strength	fcu=35 N/mm²
Characteristic strength of steel	fy=250 N/mm²
Diameter of tension bars	dia=40 mm
Designated exposure class is XC2	
Specified fixing tolerance	tol=10 mm
Nominal concrete cover	cover=45 mm
Overall thickness of slab	h=750 mm
Effective depth of section	d=685 mm
Chosen spacing of tension bars	pch=50 mm
Diameter of distribution bars	diamn=20 mm
Spacing of distribution bars	pchDA=170 mm

TENSION	**Characteristic strength**	**250 N/mm²**
REINFORCEMENT	**Diameter of bars**	**40 mm**
SUMMARY	**Spacing of bars**	**50 mm**
	Effective depth	**685 mm**
	Area of steel required	**21404 mm²/m**
	Area of steel provided	**25132 mm²/m**
	Percentage provided	**3.3509 %**
	Weight of steel provided	**197.29 kg/m²**

DISTRIBUTION	**Characteristic strength**	**250 N/mm²**
REINFORCEMENT	**Diameter of bars**	**20 mm**
SUMMARY	**Spacing of bars**	**170 mm**
	Depth to bar centres	**655 mm**
	Area of steel required	**1800 mm²/m**
	Area of steel provided	**1847 mm²/m**
	Percentage provided	**0.24627 %**
	Weight of steel provided	**14.5 kg/m²**

Check on span/effective-depth ratio

Basic ratio for continuous slab	bs'd=26 (see Table 3.9)
Area of tension steel provided	Aspr=25132 mm²
Service stress in this steel	fs=2*fy*As/(3*Aspr)=141.94 N/mm²
Mod.factor for tension steel	modf1=0.99833
Mod.factor for no comp.steel	modf2=1.0
Maximum permissible span/effective-depth ratio	ps'd=bs'd*modf1*modf2=25.956
Effective span of slab	span=12 m

Although span exceeds 10 m, partitions/finishes are not considered sensitive to deflection, so modification to basic ratio is unnecessary.

True span/effective-depth ratio	as'd=1000*span/d=17.518

As this does not exceed 25.956, this is Acceptable.

Location: Lightly-loaded thin slab with non-standard reinforcement

Design of solid r.c. slabs reinforced in tension only.

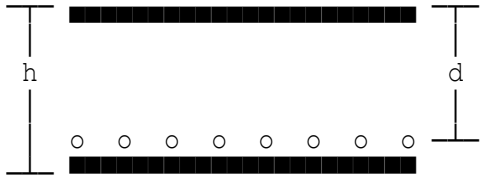

Calculations for singly-reinforced slabs using formulae in Cl.3.4.4.4, i.e. assuming rectangular stress block and restricting NA depth to 0.4*d at supports (except supports to cantilevers) and 0.5*d near midspan (redistribution, if any, limited to 10%).
Design to BS8110(1997) with partial safety factor for steel gammaS=1.15
Section location: Near midspan of span with both ends continuous.
Ultimate moment (after redistr.) M=15 kNm/m
Characteristic concrete strength fcu=60 N/mm²
Characteristic strength of steel fy=425 N/mm²

fy has been set to less than the characteristic strength in order to achieve a design which satisfies span/effective-depth requirements.

Diameter of tension bars	dia=16 mm
Designated exposure class is XC4	
Specified fixing tolerance	tol=10 mm
Nominal concrete cover	cover=30 mm
Overall thickness of slab	h=100 mm
Effective depth of section	d=62 mm
Chosen spacing of tension bars	pch=200 mm
Diameter of distribution bars	diamn=8 mm
Spacing of distribution bars	pchDA=190 mm

TENSION	**Characteristic strength**	**425 N/mm²**
REINFORCEMENT	**Diameter of bars**	**16 mm**
SUMMARY	**Spacing of bars**	**200 mm**
	Effective depth	**62 mm**
	Area of steel required	**710.35 mm²/m**
	Area of steel provided	**1005 mm²/m**
	Percentage provided	**1.005 %**
	Weight of steel provided	**7.89 kg/m²**

DISTRIBUTION	**Characteristic strength**	**425 N/mm²**
REINFORCEMENT	**Diameter of bars**	**8 mm**
SUMMARY	**Spacing of bars**	**190 mm**
	Depth to bar centres	**50 mm**
	Area of steel required	**130 mm²/m**
	Area of steel provided	**264 mm²/m**
	Percentage provided	**0.264 %**
	Weight of steel provided	**2.07 kg/m²**

Check on span/effective-depth ratio

Basic ratio for continuous slab	bs'd=26 (see Table 3.9)
Area of tension steel provided	Aspr=1005 mm²
Service stress in this steel	fs=2*fy*As/(3*Aspr)=200.26 N/mm²
Mod.factor for tension steel	modf1=1.0302
Mod.factor for no comp.steel	modf2=1.0
Maximum permissible span/effective-depth ratio	ps'd=bs'd*modf1*modf2=26.786
Effective span of slab	span=8 m
True span/effective-depth ratio	as'd=1000*span/d=129.03
Perm. span/effective-depth ratio	26.786

Hence unacceptable.

WARNING:
Either provide a thicker slab, or reduce the service stress.
This can be achieved by repeating the calculations and employing a lower value for the characteristic steel strength.

Location: Ex1 - Continuous slab

Bending in solid slabs (with comp.steel if reqd.),

designed per metre width, with checks on minimum steel

and span/effective-depth ratio

Calculations to EN 1992-1-1:2004 Eurocode 2 : Design of concrete structures & assume the use of a simplified rectangular concrete stress-block, and that the depth to the NA is restricted to 0.45d

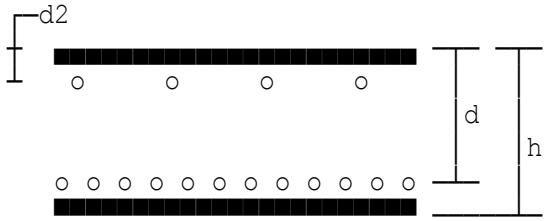

Design BM before redistribution Mbef=625 kNm
Section being analysed is considered as continuous.
Section considered has a hogging moment.
Design BM (after redistribution) M=600 kNm

Char yield strength of r'ment fyk=500 N/mm²
Max.aggregate size (for bar spc.) hagg=20 mm
Diameter of tension bars dia=25 mm
Diameter of distribution bars diad=12 mm
Effective depth of section d=350 mm

DESIGN	**Overall depth**	**400 mm**
SUMMARY	**Effective depth**	**350 mm**
FLEXURE	**Parameter K**	**0.1633**
	Parameter K'	**0.1684**
	Lever arm ratio z/d	**0.8255**
	Steel area (tension)	**4776 mm²/m**
	Steel percentage req.	**1.365 %**
	Minimum area of steel	**527.2 mm²/m**
	Maximum area of steel	**16000 mm²/m**
	Distribution steel	**955.2 mm²/m**

Chosen spacing of tension bars pch=100 mm
Diameter of distribution bars diad=12 mm
Chosen spacing of distn. bars pchd=110 mm

TENSION REINFORCEMENT	**Diameter of bars**	**25 mm**
	Spacing of bars	**100 mm**
	Area of steel required	**4776 mm²/m**
	Area of steel provided	**4908 mm²/m**
DISTRIBUTION REINFORCEMENT	**Diameter of bars**	**12 mm**
	Spacing of bars	**110 mm**
	Area of steel required	**955.2 mm²/m**
	Area of steel provided	**1028 mm²/m**

Shear

Location for shear calculation:	350mm from internal support
Shear force due to ultimate load	VEd=250 kN
Term for shear resistance	vRdc=(rho1*fck)^(1/3)=3.478
Shear resistance	VRdc=CRdc*ks*vRdc*bw*d/1000=256.5 kN
Minimum stress	vmin=0.035*ks^1.5*fck^0.5=0.4461 N/mm²
Minimum shear resistance	VRdm=vmin*bw*d/1000=156.1 kN

SHEAR SUMMARY	**Design shear force**	**250 kN**
	Design shear resistance	**256.5 kN**

Crack control check

Unfactored permanent load on slab	Gk=100 kN
Unfactored variable load on slab	Qk=40 kN
Permanent load factor	gamG=1.35
Variable load factor	gamQ=1.5
Factor Ψ2 for variable load	psi2=0.3
SLS stress in reinforcement σs	SLSs=500/1.15*(As/Aspr)*ratio*1 /delta=253.1 N/mm²
Design crack width	wk=0.3 mm
Max allowable SLS stress σs	SLSs2=TABLE 7.3 for pch=100 =320 N/mm²

The bar spacing 100 mm used complies with Table 7.3N of EC2 Part 1:2004 hence satisfactory.

Location: Ex2 - Simply supported slab

Bending in solid slabs (with comp.steel if reqd.),

designed per metre width, with checks on minimum steel

and span/effective-depth ratio

Calculations to EN 1992-1-1:2004 Eurocode 2 : Design of concrete structures & assume the use of a simplified rectangular concrete stress-block, and that the depth to the NA is restricted to 0.45d

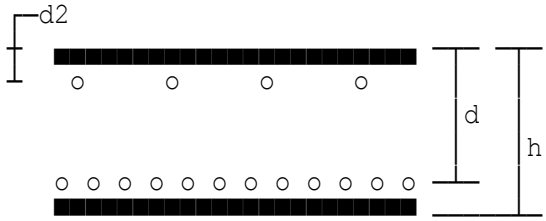

Design BM before redistribution Mbef=150 kNm
Section being analysed is considered as non-continuous.
Char yield strength of r'ment fyk=500 N/mm²
Max.aggregate size (for bar spc.) hagg=20 mm
Diameter of tension bars dia=16 mm
Diameter of distribution bars diad=8 mm
Effective depth of section d=245 mm

DESIGN	**Overall depth**	**300 mm**
SUMMARY	**Effective depth**	**245 mm**
FLEXURE	**Parameter K**	**0.0714**
	Parameter K'	**0.1684**
	Lever arm ratio z/d	**0.9324**
	Steel area (tension)	**1510 mm²/m**
	Steel percentage req.	**0.6164 %**
	Minimum area of steel	**408.9 mm²/m**
	Maximum area of steel	**12000 mm²/m**
	Distribution steel	**408.9 mm²/m**

Chosen spacing of tension bars pch=130 mm
Diameter of distribution bars diad=8 mm
Chosen spacing of distn. bars pchd=120 mm

TENSION REINFORCEMENT	**Diameter of bars**	**16 mm**
	Spacing of bars	**130 mm**
	Area of steel required	**1510 mm²/m**
	Area of steel provided	**1546 mm²/m**
DISTRIBUTION REINFORCEMENT	**Diameter of bars**	**8 mm**
	Spacing of bars	**120 mm**
	Area of steel required	**408.9 mm²/m**
	Area of steel provided	**418 mm²/m**

Deflection check

Effective span of beam L=4.3 m
Actual span to depth ratio l'd=L*1000/d=17.55
Allowable span/depth ratio l'da=k*N*F1*F2*F3=19.98

DESIGN	**Actual l/d ratio**	**17.55**
SUMMARY	**Basic l/d ratio**	**19.52**
DEFLECTION	**Span factor**	**1**
	Flange beam factor F1	**1**
	Long spans factor F2	**1**
	Steel stress factor F3	**1.024**
	Allowable l/d ratio	**19.98**

Note: Care should be taken with the EC2 values as the deflection equations used give unrealistically high values. National Annex to EC2 Part 1:2004, Table NA.5 gives span/effective depth ratios for highly stressed concrete (C30/37 & ρ=1.5%) as follows:

Simply supported spans	**14**
End spans	**18**
Interior spans	**20**

Shear

Location for shear calculation:	250mm from support
Shear force due to ultimate load	VEd=125 kN
Term for shear resistance	vRdc=(rho1*fck)^(1/3)=2.227
Shear resistance	VRdc=CRdc*ks*vRdc*bw*d/1000=124.6 kN
Minimum stress	vmin=0.035*ks^1.5*fck^0.5=0.5438 N/mm²
Minimum shear resistance	VRdm=vmin*bw*d/1000=133.2 kN
Modified shear resistance	VRdc=VRdm=133.2 kN

SHEAR SUMMARY	**Design shear force**	**125 kN**
	Design shear resistance	**133.2 kN**

Crack control check

Unfactored permanent load on slab	Gk=50 kN
Unfactored variable load on slab	Qk=20 kN
Permanent load factor	gamG=1.35
Variable load factor	gamQ=1.5
Factor Ψ2 for variable load	psi2=0.3
SLS stress in reinforcement σs	SLSs=500/1.15*(As/Aspr)*ratio*1 /delta=243.9 N/mm²
Design crack width	wk=0.3 mm
Max allowable SLS stress σs	SLSs2=TABLE 7.3 for pch=130 =296 N/mm²

The bar spacing 130 mm used complies with Table 7.3N of EC2 Part 1:2004 hence satisfactory.

Location: Ex3 - Lightly loaded section

Bending in solid slabs (with comp.steel if reqd.),

designed per metre width, with checks on minimum steel

and span/effective-depth ratio

Calculations to EN 1992-1-1:2004 Eurocode 2 : Design of concrete structures & assume the use of a simplified rectangular concrete stress-block, and that the depth to the NA is restricted to 0.45d

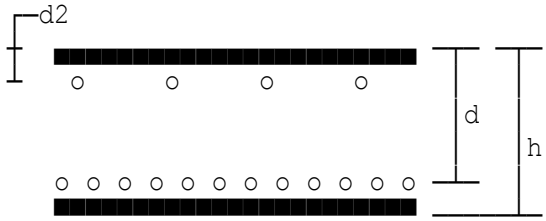

Design BM before redistribution Mbef=15 kNm
Section being analysed is considered as non-continuous.
Char yield strength of r'ment fyk=500 N/mm²
Max.aggregate size (for bar spc.) hagg=20 mm
Diameter of tension bars dia=10 mm
Diameter of distribution bars diad=10 mm
Effective depth of section d=160 mm

DESIGN	**Overall depth**	**200 mm**
SUMMARY	**Effective depth**	**160 mm**
FLEXURE	**Parameter K**	**0.0195**
	Parameter K'	**0.1684**
	Lever arm ratio z/d	**0.95**
	Steel area (tension)	**241 mm²/m**
	Steel percentage req.	**0.1506 %**
	Minimum area of steel	**241 mm²/m**
	Maximum area of steel	**8000 mm²/m**
	Distribution steel	**241 mm²/m**

Chosen spacing of tension bars pch=325 mm

TENSION (AND DISTRIBUTION)	**Diameter of bars**	**10 mm**
REINFORCEMENT	**Spacing of bars**	**325 mm**
	Area of steel required	**241 mm²/m**
	Area of steel provided	**241 mm²/m**

Deflection check

Effective span of beam L=4.3 m
Actual span to depth ratio l'd=L*1000/d=26.88
Allowable span/depth ratio l'da=k*N*F1*F2*F3=115.9
Absolute value of span/depth l'da=40*k=40

DESIGN	**Actual l/d ratio**	**26.88**
SUMMARY	**Basic l/d ratio**	**115.9**
DEFLECTION	**Span factor**	**1**
	Flange beam factor F1	**1**
	Long spans factor F2	**1**
	Steel stress factor F3	**1**
	Allowable l/d ratio	**40**

NOTE: Care should be taken with the EC2 values as the deflection equations used give unrealistically high values. National Annex to EC2 Part 1:2004, Table NA.5 gives span/effective depth ratios for lightly stressed concrete (C30/37 & ρ=0.5%) as follows:

Simply supported spans	**20**
End spans	**26**
Interior spans	**30**

Shear

Location for shear calculation:	150 mm from support
Shear force due to ultimate load	VEd=14 kN
Term for shear resistance	vRdc=(rho1*fck)^(1/3)=1.312
Shear resistance	VRdc=CRdc*ks*vRdc*bw*d/1000=50.39 kN
Minimum stress	vmin=0.035*ks^1.5*fck^0.5=0.5422 N/mm²
Minimum shear resistance	VRdm=vmin*bw*d/1000=86.75 kN
Modified shear resistance	VRdc=VRdm=86.75 kN

SHEAR SUMMARY	**Design shear force**	**14 kN**
	Design shear resistance	**86.75 kN**

Crack control check

Location: Ex4 - End span

Bending in solid slabs (with comp.steel if reqd.),

designed per metre width, with checks on minimum steel

and span/effective-depth ratio

Calculations to EN 1992-1-1:2004 Eurocode 2 : Design of concrete structures & assume the use of a simplified rectangular concrete stress-block, and that the depth to the NA is restricted to 0.45d

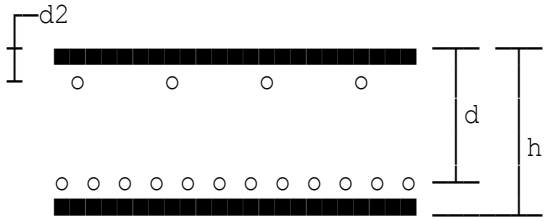

Design BM before redistribution Mbef=85 kNm
Section being analysed is considered as continuous.
Section considered has a sagging moment.
Char yield strength of r'ment fyk=500 N/mm²
Max.aggregate size (for bar spc.) hagg=20 mm
Diameter of tension bars dia=16 mm
Diameter of distribution bars diad=10 mm
Effective depth of section d=185 mm

DESIGN	**Overall depth**	**225 mm**
SUMMARY	**Effective depth**	**185 mm**
FLEXURE	**Parameter K**	**0.0828**
	Parameter K'	**0.1684**
	Lever arm ratio z/d	**0.9207**
	Steel area (tension)	**1148 mm²/m**
	Steel percentage req.	**0.6204 %**
	Minimum area of steel	**278.6 mm²/m**
	Maximum area of steel	**9000 mm²/m**
	Distribution steel	**278.6 mm²/m**

Chosen spacing of tension bars pch=175 mm
Diameter of distribution bars diad=10 mm
Chosen spacing of distn. bars pchd=280 mm

TENSION REINFORCEMENT	**Diameter of bars**	**16 mm**
	Spacing of bars	**175 mm**
	Area of steel required	**1148 mm²/m**
	Area of steel provided	**1148 mm²/m**
DISTRIBUTION REINFORCEMENT	**Diameter of bars**	**10 mm**
	Spacing of bars	**280 mm**
	Area of steel required	**278.6 mm²/m**
	Area of steel provided	**280 mm²/m**

Deflection check

Effective span of beam L=4.3 m
Actual span to depth ratio l'd=L*1000/d=23.24
Allowable span/depth ratio l'da=k*N*F1*F2*F3=23.73

DESIGN	**Actual l/d ratio**	**23.24**
SUMMARY	**Basic l/d ratio**	**18.25**
DEFLECTION	**Span factor**	**1.3**
	Flange beam factor F1	**1**
	Long spans factor F2	**1**
	Steel stress factor F3	**1**
	Allowable l/d ratio	**23.73**

Note: Care should be taken with the EC2 values as the deflection equations used give unrealistically high values. National Annex to EC2 Part 1:2004, Table NA.5 gives span/effective depth ratios for highly stressed concrete (C30/37 & ρ=1.5%) as follows:

Simply supported spans	**14**
End spans	**18**
Interior spans	**20**

Shear

Location for shear calculation:	200 mm from support
Shear force due to ultimate load	VEd=68 kN
Term for shear resistance	vRdc=(rho1*fck)^(1/3)=2.104
Shear resistance	VRdc=CRdc*ks*vRdc*bw*d/1000=93.4 kN
Minimum stress	vmin=0.035*ks^1.5*fck^0.5=0.5422 N/mm²
Minimum shear resistance	VRdm=vmin*bw*d/1000=100.3 kN
Modified shear resistance	VRdc=VRdm=100.3 kN

SHEAR SUMMARY	**Design shear force**	**68 kN**
	Design shear resistance	**100.3 kN**

Crack control check

Unfactored permanent load on slab	Gk=40 kN
Unfactored variable load on slab	Qk=20 kN
Permanent load factor	gamG=1.35
Variable load factor	gamQ=1.5
Factor Ψ2 for variable load	psi2=0.3
SLS stress in reinforcement σs	SLSs=500/1.15*(As/Aspr)*ratio*1 /delta=238.1 N/mm²
Design crack width	wk=0.3 mm
Max allowable SLS stress σs	SLSs1=TABLE 7.2 for dia=16 =240 N/mm²

The bar size 16 mm used complies with Table 7.2N of EC2 Part 1:2004 hence satisfactory.

Location: Ex5 - Simply supported slab with accurate F3 evaluation

Bending in solid slabs (with comp.steel if reqd.),

designed per metre width, with checks on minimum steel

and span/effective-depth ratio

Calculations to EN 1992-1-1:2004 Eurocode 2 : Design of concrete structures & assume the use of a simplified rectangular concrete stress-block, and that the depth to the NA is restricted to 0.45d

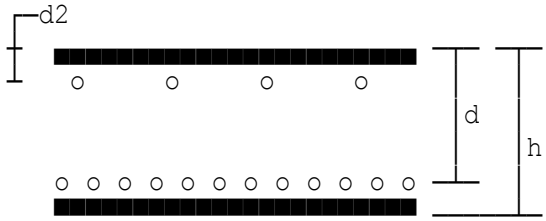

Design BM before redistribution Mbef=150 kNm
Section being analysed is considered as non-continuous.
Char yield strength of r'ment fyk=500 N/mm²
Max.aggregate size (for bar spc.) hagg=20 mm
Diameter of tension bars dia=16 mm
Diameter of distribution bars diad=8 mm
Effective depth of section d=245 mm

DESIGN	**Overall depth**	**300 mm**
SUMMARY	**Effective depth**	**245 mm**
FLEXURE	**Parameter K**	**0.0714**
	Parameter K'	**0.1684**
	Lever arm ratio z/d	**0.9324**
	Steel area (tension)	**1510 mm²/m**
	Steel percentage req.	**0.6164 %**
	Minimum area of steel	**408.9 mm²/m**
	Maximum area of steel	**12000 mm²/m**
	Distribution steel	**408.9 mm²/m**

Chosen spacing of tension bars pch=130 mm
Diameter of distribution bars diad=8 mm
Chosen spacing of distn. bars pchd=120 mm

TENSION REINFORCEMENT	**Diameter of bars**	**16 mm**
	Spacing of bars	**130 mm**
	Area of steel required	**1510 mm²/m**
	Area of steel provided	**1546 mm²/m**
DISTRIBUTION REINFORCEMENT	**Diameter of bars**	**8 mm**
	Spacing of bars	**120 mm**
	Area of steel required	**408.9 mm²/m**
	Area of steel provided	**418 mm²/m**

Deflection check

Effective span of beam L=4.3 m
Unfactored permanent load on slab Gk=50 kN
Unfactored variable load on slab Qk=20 kN
Permanent load factor gamG=1.35

Variable load factor	gamQ=1.5
Actual span to depth ratio	l'd=L*1000/d=17.55
Factor Ψ2 for variable load	psi2=0.3
SLS stress in reinforcement σs	SLSs=500/1.15*(As/Aspr)*ratio*1 /delta=243.9 N/mm²
Allowable span/depth ratio	l'da=k*N*F1*F2*F3=24.8

DESIGN	**Actual l/d ratio**	**17.55**
SUMMARY	**Basic l/d ratio**	**19.52**
DEFLECTION	**Span factor**	**1**
	Flange beam factor F1	**1**
	Long spans factor F2	**1**
	Steel stress factor F3	**1.271**
	Allowable l/d ratio	**24.8**

Note: Care should be taken with the EC2 values as the deflection equations used give unrealistically high values. National Annex to EC2 Part 1:2004, Table NA.5 gives span/effective depth ratios for highly stressed concrete (C30/37 & ρ=1.5%) as follows:

Simply supported spans	**14**
End spans	**18**
Interior spans	**20**

Shear

Location for shear calculation:	250mm from support
Shear force due to ultimate load	VEd=125 kN
Term for shear resistance	vRdc=(rho1*fck)^(1/3)=2.227
Shear resistance	VRdc=CRdc*ks*vRdc*bw*d/1000=124.6 kN
Minimum stress	vmin=0.035*ks^1.5*fck^0.5=0.5438 N/mm²
Minimum shear resistance	VRdm=vmin*bw*d/1000=133.2 kN
Modified shear resistance	VRdc=VRdm=133.2 kN

SHEAR SUMMARY	**Design shear force**	**125 kN**
	Design shear resistance	**133.2 kN**

Location: Typical continuous slab reinforced with high-yield steel

Bending in solid slabs (with comp.steel if reqd.),

designed per metre width, with checks on minimum steel

and span/effective-depth ratio

Calculations are based on formulae in Clause 3.4.4.4 of BS8110: Part 1 and thus assume the use of a simplified rectangular concrete stress-block, and that the depth to the neutral axis is restricted to d/2.

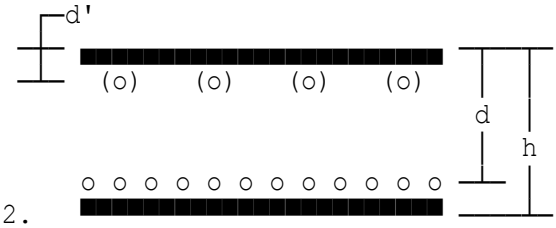

Design to BS8110(1997) with partial safety factor for steel gammaS=1.15
Moment before redistribution Mbef=625 kNm/m
Slab containing section being analysed is considered as continuous.
Design moment (after redistrib.) M=600 kNm/m
Characteristic concrete strength fcu=25 N/mm²
Characteristic steel strength fy=500 N/mm²
Longitudinal reinforcement is high-yield steel.
Diameter of tension bars dia=20 mm
Designated exposure class is XC1
Specified fixing tolerance tol=10 mm
Nominal concrete cover cover=25 mm
Overall thickness of slab h=400 mm
Effective depth of section d=365 mm
Diameter of compression bars diac=16 mm
Depth to compression steel d'=33 mm
Chosen comp.bar spacing (c.to c.) pchCA=250 mm
Chosen spacing of tension bars pch=60 mm

Diameter of distribution bars diamn=12 mm
Spacing of distribution bars pchDA=200 mm

TENSION REINFORCEMENT SUMMARY	**Characteristic strength**	**500 N/mm²**
	Diameter of bars	**20 mm**
	Spacing of bars	**60 mm**
	Effective depth	**365 mm**
	Area of steel required	**4771.5 mm²/m**
	Area of steel provided	**5235 mm²/m**
	Percentage provided	**1.3088 %**
	Weight of steel provided	**41.09 kg/m²**
COMPRESSION REINFORCEMENT SUMMARY	**Characteristic strength**	**500 N/mm²**
	Diameter of bars	**16 mm**
	Spacing of bars	**250 mm**
	Depth to bar centres	**33 mm**
	Area of steel required	**800 mm²/m**
	Area of steel provided	**804 mm²/m**
	Percentage provided	**0.201 %**
	Weight of steel provided	**6.31 kg/m²**

DISTRIBUTION	**Characteristic strength**	**500 N/mm²**
REINFORCEMENT	**Diameter of bars**	**12 mm**
SUMMARY	**Spacing of bars**	**200 mm**
	Depth to bar centres	**349 mm**
	Area of steel required	**520 mm²/m**
	Area of steel provided	**565 mm²/m**
	Percentage provided	**0.14125 %**
	Weight of steel provided	**4.44 kg/m²**

Check on span/effective-depth ratio

Basic ratio for slab
continuous at one edge bs'd=23
Mod.factor for tension steel modf1=0.79755
Area of compression steel prov. As'pr=804 mm²
Percentage of compression steel per'=0.201 %
From Equation 9 of BS8110, with percentage of comp.steel=0.201 %,
Mod.factor for compression steel modf2=1+per'/(3+per')=1.0628
Maximum permissible
span/effective-depth ratio ps'd=bs'd*modf1*modf2=19.496
Effective span of slab span=5 m
True span/effective-depth ratio as'd=1000*span/d=13.699
As this does not exceed 19.496, this is Acceptable.

Location: Thick, heavily-loaded continuous slab, mild steel reinfmt.

Bending in solid slabs (with comp.steel if reqd.),

designed per metre width, with checks on minimum steel

and span/effective-depth ratio

Calculations are based on formulae in Clause 3.4.4.4 of BS8110: Part 1 and thus assume the use of a simplified rectangular concrete stress-block, and that the depth to the neutral axis is restricted to d/2.

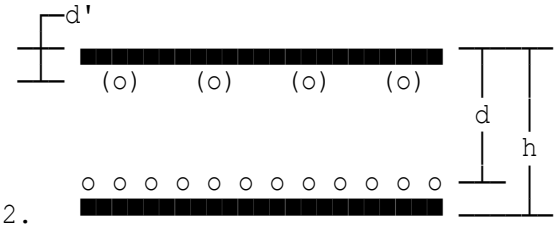

Design to BS8110(1997) with partial safety factor for steel gammaS=1.15
Moment before redistribution Mbef=3000 kNm/m
Slab containing section being analysed is considered as continuous.
Design moment (after redistrib.) M=2500 kNm/m
Characteristic concrete strength fcu=35 N/mm²
Characteristic steel strength fy=250 N/mm²
Longitudinal reinforcement is mild steel.
Diameter of tension bars dia=40 mm
Designated exposure class is XC2
Specified fixing tolerance tol=10 mm
Nominal concrete cover cover=45 mm
Overall thickness of slab h=750 mm
Effective depth of section d=685 mm
Diameter of compression bars diac=25 mm
Depth to compression steel d'=57.5 mm
Chosen comp.bar spacing (c.to c.) pchCA=325 mm
Chosen spacing of tension bars pch=60 mm

Diameter of distribution bars diamn=20 mm
Spacing of distribution bars pchDA=170 mm

TENSION REINFORCEMENT SUMMARY	**Characteristic strength**	**250 N/mm²**
	Diameter of bars	**40 mm**
	Spacing of bars	**60 mm**
	Effective depth	**685 mm**
	Area of steel required	**20621 mm²/m**
	Area of steel provided	**20943 mm²/m**
	Percentage provided	**2.7924 %**
	Weight of steel provided	**164.4 kg/m²**
COMPRESSION REINFORCEMENT SUMMARY	**Characteristic strength**	**250 N/mm²**
	Diameter of bars	**25 mm**
	Spacing of bars	**325 mm**
	Depth to bar centres	**57.5 mm**
	Area of steel required	**1500 mm²/m**
	Area of steel provided	**1510 mm²/m**
	Percentage provided	**0.20133 %**
	Weight of steel provided	**11.85 kg/m²**

DISTRIBUTION	**Characteristic strength**	**250 N/mm²**
REINFORCEMENT	**Diameter of bars**	**20 mm**
SUMMARY	**Spacing of bars**	**170 mm**
	Depth to bar centres	**655 mm**
	Area of steel required	**1800 mm²/m**
	Area of steel provided	**1847 mm²/m**
	Percentage provided	**0.24627 %**
	Weight of steel provided	**14.5 kg/m²**

Check on span/effective-depth ratio

Basic ratio for continuous slab bs'd=26 (see Table 3.9)
Mod.factor for tension steel modf1=0.92476
Area of compression steel prov. As'pr=1510 mm²
Percentage of compression steel per'=0.20133 %
From Equation 9 of BS8110, with percentage of comp.steel=0.20133 %,
Mod.factor for compression steel modf2=1+per'/(3+per')=1.0629
Maximum permissible
span/effective-depth ratio ps'd=bs'd*modf1*modf2=25.556
Effective span of slab span=12 m
Although span exceeds 10 m, partitions/finishes are not considered
sensitive to deflection, so modification to basic ratio is unnecessary.
True span/effective-depth ratio as'd=1000*span/d=17.518
As this does not exceed 25.556, this is Acceptable.

Location: Lightly-loaded thin slab with non-standard reinforcement

Bending in solid slabs (with comp.steel if reqd.),

designed per metre width, with checks on minimum steel

and span/effective-depth ratio

Calculations are based on formulae in Clause 3.4.4.4 of BS8110: Part 1 and thus assume the use of a simplified rectangular concrete stress-block, and that the depth to the neutral axis is restricted to d/2.

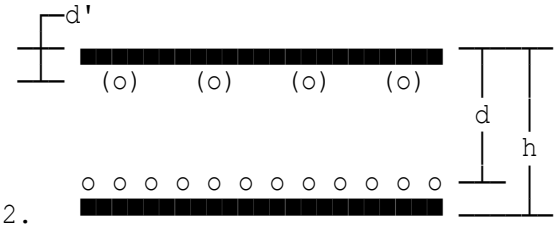

Design to BS8110(1997) with partial safety factor for steel gammaS=1.15
Moment before redistribution Mbef=15 kNm/m
Slab containing section being analysed is considered as non-continuous.
Characteristic concrete strength fcu=60 N/mm²
Characteristic steel strength fy=425 N/mm²
Steel strength other than those given in Table 3.1 of BS8110.
Specified min.steel percentage permin=0.16 %
Specified min.slab thickness mindep=215 mm
Diameter of tension bars dia=16 mm
Designated exposure class is XC4
Specified fixing tolerance tol=10 mm
Nominal concrete cover cover=30 mm
Overall thickness of slab h=100 mm
Effective depth of section d=62 mm
Chosen spacing of tension bars pch=200 mm

Diameter of distribution bars diamn=8 mm
Spacing of distribution bars pchDA=190 mm

TENSION REINFORCEMENT SUMMARY	**Characteristic strength**	**425 N/mm²**
	Diameter of bars	**16 mm**
	Spacing of bars	**200 mm**
	Effective depth	**62 mm**
	Area of steel required	**710.35 mm²/m**
	Area of steel provided	**1005 mm²/m**
	Percentage provided	**1.005 %**
	Weight of steel provided	**7.89 kg/m²**
DISTRIBUTION REINFORCEMENT SUMMARY	**Characteristic strength**	**425 N/mm²**
	Diameter of bars	**8 mm**
	Spacing of bars	**190 mm**
	Depth to bar centres	**50 mm**
	Area of steel required	**160 mm²/m**
	Area of steel provided	**264 mm²/m**
	Percentage provided	**0.264 %**
	Weight of steel provided	**2.07 kg/m²**

Check on span/effective-depth ratio

Basic ratio for simp.-sup.slab	bs'd=20 (see Table 3.9)
Mod.factor for tension steel	modf1=1.0302
Mod.factor for no comp.steel	modf2=1.0
Maximum permissible span/effective-depth ratio	ps'd=bs'd*modf1*modf2=20.605
Effective span of slab	span=2.5 m

WARNING:

True span/effective-depth ratio	**40.323**
Perm.span/effective-depth ratio	**20.605**

Hence unacceptable.

Location: Ex1 - Continuous slab

Bending in solid slabs (with comp.steel if reqd.),

designed per metre width, with checks on minimum steel

and span/effective-depth ratio

Calculations to EN 1992-1-1:2004 Eurocode 2 : Design of concrete structures & assume the use of a simplified rectangular concrete stress-block, and that the depth to the NA is restricted to 0.45d

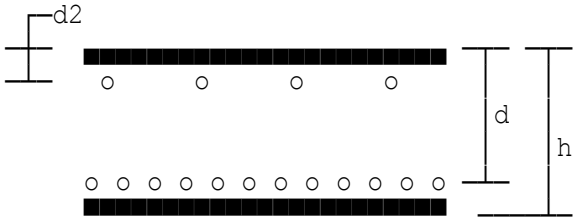

Design BM before redistribution Mbef=625 kNm
Section being analysed is considered as continuous.
Section considered has a hogging moment.
Design BM (after redistribution) M=600 kNm

Char yield strength of reinft. fyk=500 N/mm²
Max.aggregate size (for bar spc.) hagg=20 mm
Diameter of tension bars dia=25 mm
Diameter of distribution bars diad=12 mm
Effective depth of section d=350 mm

DESIGN	**Overall depth**	**400 mm**
SUMMARY	**Effective depth**	**350 mm**
FLEXURE	**Parameter K**	**0.1633**
	Parameter K'	**0.1684**
	Lever arm ratio z/d	**0.8255**
	Steel area (tension)	**4776 mm²/m**
	Steel percentage req.	**1.365 %**
	Minimum area of steel	**527.2 mm²/m**
	Maximum area of steel	**16000 mm²/m**
	Distribution steel	**955.2 mm²/m**

Chosen spacing of tension bars pch=100 mm

Spacing of distribution steel

Diameter of distribution bars diad=12 mm
Chosen spacing of distn. bars pchd=110 mm

TENSION REINFORCEMENT	**Diameter of bars**	**25 mm**
	Spacing of bars	**100 mm**
	Area of steel required	**4776 mm²/m**
	Area of steel provided	**4908 mm²/m**
DISTRIBUTION REINFORCEMENT	**Diameter of bars**	**12 mm**
	Spacing of bars	**110 mm**
	Area of steel required	**955.2 mm²/m**
	Area of steel provided	**1028 mm²/m**

Shear check

Location for shear calculation:	350mm from internal support
Shear force due to ultimate load	VEd=250 kN
Term for shear resistance	vRdc=(rho1*fck)^(1/3)=3.478
Shear resistance	VRdc=CRdc*ks*vRdc*bw*d/1000=256.5 kN
Minimum stress	vmin=0.035*ks^1.5*fck^0.5=0.4461 N/mm²
Minimum shear resistance	VRdm=vmin*bw*d/1000=156.1 kN

SHEAR SUMMARY	**Design shear force**	**250 kN**
	Design shear resistance	**256.5 kN**

Crack control check

Unfactored permanent load on slab	Gk=100 kN
Unfactored variable load on slab	Qk=40 kN
Permanent load factor	gamG=1.35
Variable load factor	gamQ=1.5
Factor Ψ2 for variable load	psi2=0.3
SLS stress in reinforcement σs	SLSs=500/1.15*(As/Aspr)*ratio*1 /delta=253.1 N/mm²
Design crack width	wk=0.3 mm
Max allowable SLS stress σs	SLSs2=TABLE 7.3 for pch=100 =320 N/mm²

The bar spacing 100 mm used complies with Table 7.3N of EC2 Part 1:2004 hence satisfactory.

Location: Ex2 - Simply supported slab

Bending in solid slabs (with comp.steel if reqd.),

designed per metre width, with checks on minimum steel

and span/effective-depth ratio

Calculations to EN 1992-1-1:2004 Eurocode 2 : Design of concrete structures & assume the use of a simplified rectangular concrete stress-block, and that the depth to the NA is restricted to 0.45d

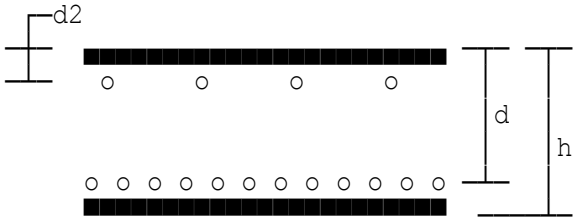

Design BM before redistribution Mbef=150 kNm
Section being analysed is considered as non-continuous.
Char yield strength of reinft. fyk=500 N/mm²
Max.aggregate size (for bar spc.) hagg=20 mm
Diameter of tension bars dia=16 mm
Diameter of distribution bars diad=8 mm
Effective depth of section d=245 mm

DESIGN	**Overall depth**	**300 mm**
SUMMARY	**Effective depth**	**245 mm**
FLEXURE	**Parameter K**	**0.0714**
	Parameter K'	**0.1684**
	Lever arm ratio z/d	**0.9324**
	Steel area (tension)	**1510 mm²/m**
	Steel percentage req.	**0.6164 %**
	Minimum area of steel	**408.9 mm²/m**
	Maximum area of steel	**12000 mm²/m**
	Distribution steel	**408.9 mm²/m**

Chosen spacing of tension bars pch=130 mm

Spacing of distribution steel

Diameter of distribution bars diad=8 mm
Chosen spacing of distn. bars pchd=120 mm

TENSION REINFORCEMENT	**Diameter of bars**	**16 mm**
	Spacing of bars	**130 mm**
	Area of steel required	**1510 mm²/m**
	Area of steel provided	**1546 mm²/m**
DISTRIBUTION REINFORCEMENT	**Diameter of bars**	**8 mm**
	Spacing of bars	**120 mm**
	Area of steel required	**408.9 mm²/m**
	Area of steel provided	**418 mm²/m**

Deflection check

Effective span of beam	L=4.3 m
Actual span to depth ratio	l'd=L*1000/d=17.55
Allowable span/depth ratio	l'da=k*N*F1*F2*F3=19.98

DESIGN	**Actual l/d ratio**	**17.55**
SUMMARY	**Basic l/d ratio**	**19.52**
DEFLECTION	**Span factor**	**1**
	Flange beam factor F1	**1**
	Long spans factor F2	**1**
	Steel stress factor F3	**1.024**
	Allowable l/d ratio	**19.98**

Note: Care should be taken with the EC2 values as the deflection equations used give unrealistically high values. National Annex to EC2 Part 1:2004, Table NA.5 gives span/effective depth ratios for highly stressed concrete (C30/37 & ρ=1.5%) as follows:

Simply supported spans	**14**
End spans	**18**
Interior spans	**20**

Shear check

Location for shear calculation:	250mm from support
Shear force due to ultimate load	VEd=125 kN
Term for shear resistance	vRdc=(rho1*fck)^(1/3)=2.227
Shear resistance	VRdc=CRdc*ks*vRdc*bw*d/1000=124.6 kN
Minimum stress	vmin=0.035*ks^1.5*fck^0.5=0.5438 N/mm²
Minimum shear resistance	VRdm=vmin*bw*d/1000=133.2 kN
Modified shear resistance	VRdc=VRdm=133.2 kN

SHEAR SUMMARY	**Design shear force**	**125 kN**
	Design shear resistance	**133.2 kN**

Crack control check

Unfactored permanent load on slab	Gk=50 kN
Unfactored variable load on slab	Qk=20 kN
Permanent load factor	gamG=1.35
Variable load factor	gamQ=1.5
Factor Ψ2 for variable load	psi2=0.3
SLS stress in reinforcement σs	SLSs=500/1.15*(As/Aspr)*ratio*1 /delta=243.9 N/mm²
Design crack width	wk=0.3 mm
Max allowable SLS stress σs	SLSs2=TABLE 7.3 for pch=130 =296 N/mm²

The bar spacing 130 mm used complies with Table 7.3N of EC2 Part 1:2004 hence satisfactory.

Location: Ex3 - Lightly loaded section

Bending in solid slabs (with comp.steel if reqd.),

designed per metre width, with checks on minimum steel

and span/effective-depth ratio

Calculations to EN 1992-1-1:2004 Eurocode 2 : Design of concrete structures & assume the use of a simplified rectangular concrete stress-block, and that the depth to the NA is restricted to 0.45d

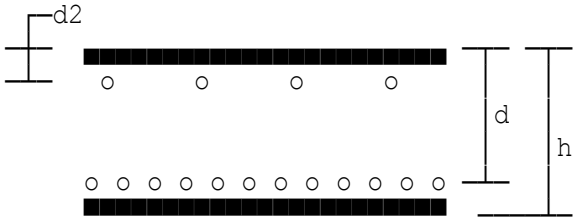

Design BM before redistribution Mbef=15 kNm
Section being analysed is considered as non-continuous.
Char yield strength of reinft. fyk=500 N/mm²
Max.aggregate size (for bar spc.) hagg=20 mm
Diameter of tension bars dia=10 mm
Diameter of distribution bars diad=10 mm
Effective depth of section d=165 mm

DESIGN	**Overall depth**	**200 mm**
SUMMARY	**Effective depth**	**165 mm**
FLEXURE	**Parameter K**	**0.0184**
	Parameter K'	**0.1684**
	Lever arm ratio z/d	**0.95**
	Steel area (tension)	**248.5 mm²/m**
	Steel percentage req.	**0.1506 %**
	Minimum area of steel	**248.5 mm²/m**
	Maximum area of steel	**8000 mm²/m**
	Distribution steel	**248.5 mm²/m**

Chosen spacing of tension bars pch=300 mm

TENSION (AND DISTRIBUTION)	**Diameter of bars**	**10 mm**
REINFORCEMENT	**Spacing of bars**	**300 mm**
	Area of steel required	**248.5 mm²/m**
	Area of steel provided	**261 mm²/m**

Deflection check

Effective span of beam L=4.3 m
Actual span to depth ratio l'd=L*1000/d=26.06
Allowable span/depth ratio l'da=k*N*F1*F2*F3=121.7
Absolute value of span/depth l'da=40*k=40

DESIGN	**Actual l/d ratio**	**26.06**
SUMMARY	**Basic l/d ratio**	**115.9**
DEFLECTION	**Span factor**	**1**
	Flange beam factor F1	**1**
	Long spans factor F2	**1**
	Steel stress factor F3	**1.05**
	Allowable l/d ratio	**40**

NOTE: Care should be taken with the EC2 values as the deflection equations used give unrealistically high values. National Annex to EC2 Part 1:2004, Table NA.5 gives span/effective depth ratios for lightly stressed concrete (C30/37 & ρ=0.5%) as follows:

Simply supported spans	**20**
End spans	**26**
Interior spans	**30**

Shear check

Location for shear calculation:	150 mm from support
Shear force due to ultimate load	VEd=14 kN
Term for shear resistance	vRdc=(rho1*fck)^(1/3)=1.334
Shear resistance	VRdc=CRdc*ks*vRdc*bw*d/1000=52.82 kN
Minimum stress	vmin=0.035*ks^1.5*fck^0.5=0.5422 N/mm²
Minimum shear resistance	VRdm=vmin*bw*d/1000=89.47 kN
Modified shear resistance	VRdc=VRdm=89.47 kN

SHEAR SUMMARY	**Design shear force**	**14 kN**
	Design shear resistance	**89.47 kN**

Crack control check

Location: Ex4 - End span

Bending in solid slabs (with comp.steel if reqd.),

designed per metre width, with checks on minimum steel

and span/effective-depth ratio

Calculations to EN 1992-1-1:2004 Eurocode 2 : Design of concrete structures & assume the use of a simplified rectangular concrete stress-block, and that the depth to the NA is restricted to 0.45d

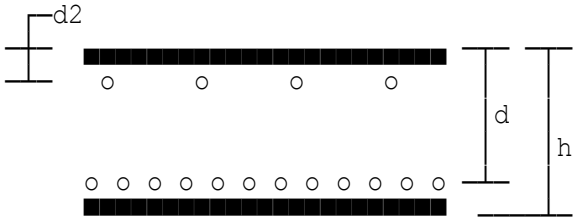

Design BM before redistribution Mbef=85 kNm
Section being analysed is considered as continuous.
Section considered has a sagging moment.
Char yield strength of reinft. fyk=500 N/mm²
Max.aggregate size (for bar spc.) hagg=20 mm
Diameter of tension bars dia=16 mm
Diameter of distribution bars diad=10 mm
Effective depth of section d=185 mm

DESIGN	**Overall depth**	**225 mm**
SUMMARY	**Effective depth**	**185 mm**
FLEXURE	**Parameter K**	**0.0828**
	Parameter K'	**0.1684**
	Lever arm ratio z/d	**0.9207**
	Steel area (tension)	**1148 mm²/m**
	Steel percentage req.	**0.6204 %**
	Minimum area of steel	**278.6 mm²/m**
	Maximum area of steel	**9000 mm²/m**
	Distribution steel	**278.6 mm²/m**

Chosen spacing of tension bars pch=175 mm

Spacing of distribution steel

Diameter of distribution bars diad=10 mm
Chosen spacing of distn. bars pchd=280 mm

TENSION REINFORCEMENT	**Diameter of bars**	**16 mm**
	Spacing of bars	**175 mm**
	Area of steel required	**1148 mm²/m**
	Area of steel provided	**1148 mm²/m**
DISTRIBUTION REINFORCEMENT	**Diameter of bars**	**10 mm**
	Spacing of bars	**280 mm**
	Area of steel required	**278.6 mm²/m**
	Area of steel provided	**280 mm²/m**

Deflection check

Effective span of beam	L=4.3 m
Actual span to depth ratio	l'd=L*1000/d=23.24
Allowable span/depth ratio	l'da=k*N*F1*F2*F3=23.73

DESIGN	**Actual l/d ratio**	**23.24**
SUMMARY	**Basic l/d ratio**	**18.25**
DEFLECTION	**Span factor**	**1.3**
	Flange beam factor F1	**1**
	Long spans factor F2	**1**
	Steel stress factor F3	**1**
	Allowable l/d ratio	**23.73**

Note: Care should be taken with the EC2 values as the deflection equations used give unrealistically high values. National Annex to EC2 Part 1:2004, Table NA.5 gives span/effective depth ratios for highly stressed concrete (C30/37 & ρ=1.5%) as follows:

Simply supported spans	**14**
End spans	**18**
Interior spans	**20**

Shear check

Location for shear calculation:	200 mm from support
Shear force due to ultimate load	VEd=68 kN
Term for shear resistance	vRdc=(rho1*fck)^(1/3)=2.104
Shear resistance	VRdc=CRdc*ks*vRdc*bw*d/1000=93.4 kN
Minimum stress	vmin=0.035*ks^1.5*fck^0.5=0.5422 N/mm²
Minimum shear resistance	VRdm=vmin*bw*d/1000=100.3 kN
Modified shear resistance	VRdc=VRdm=100.3 kN

SHEAR SUMMARY	**Design shear force**	**68 kN**
	Design shear resistance	**100.3 kN**

Crack control check

Unfactored permanent load on slab	Gk=40 kN
Unfactored variable load on slab	Qk=20 kN
Permanent load factor	gamG=1.35
Variable load factor	gamQ=1.5
Factor Ψ2 for variable load	psi2=0.3
SLS stress in reinforcement σs	SLSs=500/1.15*(As/Aspr)*ratio*1 /delta=238.1 N/mm²
Design crack width	wk=0.3 mm
Max allowable SLS stress σs	SLSs1=TABLE 7.2 for dia=16 =240 N/mm²

The bar size 16 mm used complies with Table 7.2N of EC2 Part 1:2004 hence satisfactory.

Location: Ex5 - Simply supported slab

Bending in solid slabs (with comp.steel if reqd.),

designed per metre width, with checks on minimum steel

and span/effective-depth ratio

Calculations to EN 1992-1-1:2004 Eurocode 2 : Design of concrete structures & assume the use of a simplified rectangular concrete stress-block, and that the depth to the NA is restricted to 0.45d

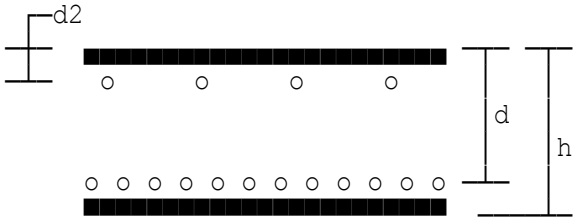

Design BM before redistribution Mbef=150 kNm
Section being analysed is considered as non-continuous.
Char yield strength of reinft. fyk=500 N/mm²
Max.aggregate size (for bar spc.) hagg=20 mm
Diameter of tension bars dia=16 mm
Diameter of distribution bars diad=8 mm
Effective depth of section d=245 mm

DESIGN	**Overall depth**	**300 mm**
SUMMARY	**Effective depth**	**245 mm**
FLEXURE	**Parameter K**	**0.0714**
	Parameter K'	**0.1684**
	Lever arm ratio z/d	**0.9324**
	Steel area (tension)	**1510 mm²/m**
	Steel percentage req.	**0.6164 %**
	Minimum area of steel	**408.9 mm²/m**
	Maximum area of steel	**12000 mm²/m**
	Distribution steel	**408.9 mm²/m**

Chosen spacing of tension bars pch=130 mm

Spacing of distribution steel

Diameter of distribution bars diad=8 mm
Chosen spacing of distn. bars pchd=120 mm

TENSION REINFORCEMENT	**Diameter of bars**	**16 mm**
	Spacing of bars	**130 mm**
	Area of steel required	**1510 mm²/m**
	Area of steel provided	**1546 mm²/m**
DISTRIBUTION REINFORCEMENT	**Diameter of bars**	**8 mm**
	Spacing of bars	**120 mm**
	Area of steel required	**408.9 mm²/m**
	Area of steel provided	**418 mm²/m**

Deflection check

Effective span of beam	L=4.3 m
Unfactored permanent load on slab	Gk=50 kN
Unfactored variable load on slab	Qk=20 kN
Permanent load factor	gamG=1.35
Variable load factor	gamQ=1.5
Actual span to depth ratio	l'd=L*1000/d=17.55
Factor Ψ2 for variable load	psi2=0.3
SLS stress in reinforcement σs	SLSs=500/1.15*(As/Aspr)*ratio*1 /delta=243.9 N/mm²
Allowable span/depth ratio	l'da=k*N*F1*F2*F3=24.8

DESIGN	**Actual l/d ratio**	**17.55**
SUMMARY	**Basic l/d ratio**	**19.52**
DEFLECTION	**Span factor**	**1**
	Flange beam factor F1	**1**
	Long spans factor F2	**1**
	Steel stress factor F3	**1.271**
	Allowable l/d ratio	**24.8**

Note: Care should be taken with the EC2 values as the deflection equations used give unrealistically high values. National Annex to EC2 Part 1:2004, Table NA.5 gives span/effective depth ratios for highly stressed concrete (C30/37 & ρ=1.5%) as follows:

Simply supported spans	**14**
End spans	**18**
Interior spans	**20**

Shear check

Location for shear calculation:	250mm from support
Shear force due to ultimate load	VEd=125 kN
Term for shear resistance	vRdc=(rho1*fck)^(1/3)=2.227
Shear resistance	VRdc=CRdc*ks*vRdc*bw*d/1000=124.6 kN
Minimum stress	vmin=0.035*ks^1.5*fck^0.5=0.5438 N/mm²
Minimum shear resistance	VRdm=vmin*bw*d/1000=133.2 kN
Modified shear resistance	VRdc=VRdm=133.2 kN

SHEAR SUMMARY	**Design shear force**	**125 kN**
	Design shear resistance	**133.2 kN**

Location: Typical continuous slab reinforced with high-yield steel

Bending in solid slabs (with comp.steel if reqd.),

designed for a given width, with checks on minimum steel

and span/effective-depth ratio

Calculations are in accordance with Clause 3.4.4.4 of BS8110: Part 1 and thus assume the use of a simplified rectangular concrete stress-block and that the depth to the neutral axis is restricted to d/2.

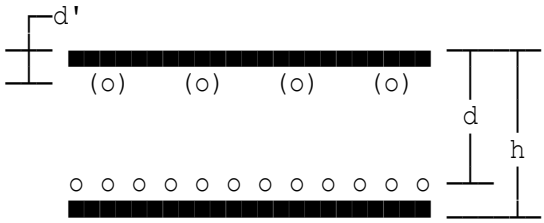

Design to BS8110(1997) with partial safety factor for steel gammaS=1.15
Moment before redistribution Mbef=1875 kNm
Slab containing section being analysed is considered as continuous.
Design moment (after redistrib.) M=1800 kNm
Characteristic concrete strength fcu=30 N/mm²
Characteristic steel strength fy=500 N/mm²
Longitudinal reinforcement is high-yield steel.
Diameter of tension bars dia=20 mm
Designated exposure class is XC1
Specified fixing tolerance tol=10 mm
Nominal concrete cover cover=25 mm
Overall thickness of slab h=400 mm
Effective depth of section d=365 mm
Breadth of slab b=3000 mm
Chosen spacing of tension bars pch=60 mm
Diameter of distribution bars diamn=12 mm
Spacing of distribution bars pchDA=200 mm

TENSION REINFORCEMENT SUMMARY	**Characteristic strength**	**500 N/mm²**
	Diameter of bars	**20 mm**
	Number of bars	**49**
	Spacing of bars	**60 mm**
	Effective depth	**365 mm**
	Area of steel required	**14386 mm²**
	Area of steel provided	**15393 mm²**
	Percentage provided	**1.2828 %**
	Weight of steel provided	**120.84 kg/m**
DISTRIBUTION REINFORCEMENT SUMMARY	**Characteristic strength**	**500 N/mm²**
	Diameter of bars	**12 mm**
	Spacing of bars	**200 mm**
	Depth to bar centres	**349 mm**
	Area of steel required	**520 mm²/m**
	Area of steel provided	**565 mm²/m**
	Percentage provided	**0.14125 %**
	Weight of steel provided	**4.44 kg/m²**

Check on span/effective-depth ratio

```
Basic ratio for slab
continuous at one edge            bs'd=23
Mod.factor for tension steel      modf1=0.78517
Mod.factor for no comp.steel      modf2=1.0
Maximum permissible
span/effective-depth ratio        ps'd=bs'd*modf1*modf2=18.059
Effective span of slab            span=5 m
True span/effective-depth ratio   as'd=1000*span/d=13.699
As this does not exceed                18.059,  this is Acceptable.
```

Location: Thick, heavily-loaded continuous slab, mild steel reinfmt.

Bending in solid slabs (with comp.steel if reqd.),

designed for a given width, with checks on minimum steel

and span/effective-depth ratio

Calculations are in accordance with Clause 3.4.4.4 of BS8110: Part 1 and thus assume the use of a simplified rectangular concrete stress-block and that the depth to the neutral axis is restricted to d/2.

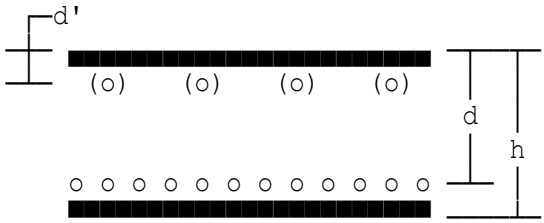

Design to BS8110(1997) with partial safety factor for steel gammaS=1.15
Moment before redistribution Mbef=6000 kNm
Slab containing section being analysed is considered as continuous.
Design moment (after redistrib.) M=5000 kNm
Characteristic concrete strength fcu=35 N/mm²
Characteristic steel strength fy=250 N/mm²
Longitudinal reinforcement is mild steel.
Diameter of tension bars dia=40 mm
Designated exposure class is XC2
Specified fixing tolerance tol=10 mm
Nominal concrete cover cover=45 mm
Overall thickness of slab h=750 mm
Effective depth of section d=685 mm
Breadth of slab b=2000 mm
Diameter of compression bars diac=25 mm
Depth to compression steel d'=57.5 mm
Chosen comp.bar spacing (c.to c.) pchCA=260 mm
Chosen spacing of tension bars pch=50 mm
Diameter of distribution bars diamn=20 mm
Spacing of distribution bars pchDA=170 mm

TENSION	**Characteristic strength**	**250 N/mm²**
REINFORCEMENT	**Diameter of bars**	**40 mm**
SUMMARY	**Number of bars**	**38**
	Spacing of bars	**50 mm**
	Effective depth	**685 mm**
	Area of steel required	**41241 mm²**
	Area of steel provided	**47752 mm²**
	Percentage provided	**3.1835 %**
	Weight of steel provided	**374.85 kg/m**

COMPRESSION REINFORCEMENT SUMMARY	**Characteristic strength**	**250 N/mm²**
	Diameter of bars	**25 mm**
	Number of bars	**8**
	Spacing of bars	**260 mm**
	Depth to bar centres	**57.5 mm**
	Area of steel required	**3000 mm²**
	Area of steel provided	**3927 mm²**
	Percentage provided	**0.2618 %**
	Weight of steel provided	**30.83 kg/m**
DISTRIBUTION REINFORCEMENT SUMMARY	**Characteristic strength**	**250 N/mm²**
	Diameter of bars	**20 mm**
	Spacing of bars	**170 mm**
	Depth to bar centres	**655 mm**
	Area of steel required	**1800 mm²/m**
	Area of steel provided	**1847 mm²/m**
	Percentage provided	**0.24627 %**
	Weight of steel provided	**14.5 kg/m²**

Check on span/effective-depth ratio

Basic ratio for continuous slab bs'd=26 (see Table 3.9)
Mod.factor for tension steel modf1=0.95713
Area of compression steel prov. As'pr=3927 mm²
Percentage of comp.steel per'=0.2618 %
From Equation 9 of BS8110, with percentage of comp.steel=0.2618 %,
Mod.factor for compression steel modf2=1+per'/(3+per')=1.0803
Maximum permissible
span/effective-depth ratio ps'd=bs'd*modf1*modf2=26.883
Effective span of slab span=12 m
Although span exceeds 10 m, partitions/finishes are not considered
sensitive to deflection, so modification to basic ratio is unnecessary.
True span/effective-depth ratio as'd=1000*span/d=17.518
As this does not exceed 26.883, this is Acceptable.

Location: Lightly-loaded thin slab with non-standard reinforcement

Bending in solid slabs (with comp.steel if reqd.),

designed for a given width, with checks on minimum steel

and span/effective-depth ratio

Calculations are in accordance with Clause 3.4.4.4 of BS8110: Part 1 and thus assume the use of a simplified rectangular concrete stress-block and that the depth to the neutral axis is restricted to d/2.

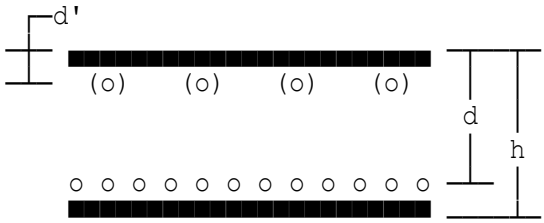

Design to BS8110(1997) with partial safety factor for steel gammaS=1.15
Moment before redistribution Mbef=60 kNm
Slab containing section being analysed is considered as non-continuous.
Characteristic concrete strength fcu=60 N/mm²
Characteristic steel strength fy=425 N/mm²
Steel strength other than those given in Table 3.1 of BS8110.
Specified min.steel percentage permin=0.16 %
Specified min.slab thickness mindep=215 mm
Diameter of tension bars dia=16 mm
Designated exposure class is XC4
Specified fixing tolerance tol=10 mm
Nominal concrete cover cover=30 mm
Overall thickness of slab h=100 mm
Effective depth of section d=62 mm
Breadth of slab b=4000 mm
Chosen spacing of tension bars pch=200 mm
Diameter of distribution bars diamn=8 mm
Spacing of distribution bars pchDA=190 mm

TENSION	**Characteristic strength**	**425 N/mm²**
REINFORCEMENT	**Diameter of bars**	**16 mm**
SUMMARY	**Number of bars**	**20**
	Spacing of bars	**200 mm**
	Effective depth	**62 mm**
	Area of steel required	**2841.4 mm²**
	Area of steel provided	**4021 mm²**
	Percentage provided	**1.0053 %**
	Weight of steel provided	**31.56 kg/m**

DISTRIBUTION	**Characteristic strength**	**425 N/mm²**
REINFORCEMENT	**Diameter of bars**	**8 mm**
SUMMARY	**Spacing of bars**	**190 mm**
	Depth to bar centres	**50 mm**
	Area of steel required	**160 mm²/m**
	Area of steel provided	**264 mm²/m**
	Percentage provided	**0.264 %**
	Weight of steel provided	**2.07 kg/m²**

Check on span/effective-depth ratio

Basic ratio for simp.-sup.slab	bs'd=20 (see Table 3.9)
Mod.factor for tension steel	modf1=1.0303
Mod.factor for no comp.steel	modf2=1.0
Maximum permissible span/effective-depth ratio	ps'd=bs'd*modf1*modf2=20.606
Effective span of slab	span=2.5 m

WARNING:
True span/effective-depth ratio 40.323
Perm.span/effective-depth ratio 20.606
Hence unacceptable.

Location: Ex1 - Continuous slab

Bending in solid slabs (with comp.steel if reqd.),

designed for a given width, with checks on minimum steel

and span/effective-depth ratio

Calculations are in accordance with EC2: Design of concrete structures and assume the use of a simplified rectangular concrete stress-block and that the depth to the NA is restricted to 0.45d.

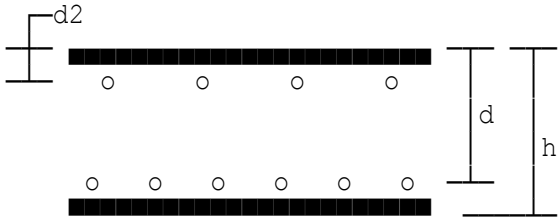

Design BM before redistribution Mbef=625 kNm
Section being analysed is considered as continuous.
Section considered has a hogging moment
Design BM (after redistribution) M=600 kNm

Char yield strength of r'ment fyk=500 N/mm²
Max.aggregate size (for bar spc.) hagg=20 mm
Diameter of tension bars dia=25 mm
Diameter of distribution bars diad=12 mm
Effective depth of section d=350 mm
Breadth of section b=1000 mm

Main reinforcement

DESIGN	**Overall depth**	**400 mm**
SUMMARY	**Effective depth**	**350 mm**
FLEXURE	**Parameter K**	**0.1633**
	Parameter K'	**0.1684**
	Lever arm ratio z/d	**0.8255**
	Steel area (tension)	**4776 mm²**
	Steel percentage req.	**1.365 %**
	Minimum area of steel	**527.2 mm²**
	Maximum area of steel	**16000 mm²**
	Distribution steel	**955.2 mm²/m**

Spacing of bars - tension reinforcement

Maximum pitch of bars (<3h) pchmx=400 mm
Calculated pitch of bars pitch=b*PI*dia^2/(4*As)=102.8 mm
Chosen spacing of tension bars pch=100 mm

Spacing of distribution steel

Diameter of distribution bars	diad=12 mm
Chosen spacing of distn. bars	pchd=110 mm

TENSION REINFORCEMENT	**Diameter of bars**	**25 mm**
	Spacing of bars	**100 mm**
	Area of steel required	**4776 mm²**
	Area of steel provided	**4908 mm²**
DISTRIBUTION REINFORCEMENT	**Diameter of bars**	**12 mm**
	Spacing of bars	**110 mm**
	Area of steel required	**955.2 mm²/m**
	Area of steel provided	**1028 mm²/m**

Shear check

Location for shear calculation:	350mm from internal support
Shear force due to ultimate load	VEd=250 kN
Term for shear resistance	vRdc=(rho1*fck)^(1/3)=3.478
Shear resistance	VRdc=CRdc*ks*vRdc*bw*d/1000=256.5 kN
Minimum stress	vmin=0.035*ks^1.5*fck^0.5=0.4461 N/mm²
Minimum shear resistance	VRdm=vmin*bw*d/1000=156.1 kN

SHEAR SUMMARY	**Design shear force**	**250 kN**
	Design shear resistance	**256.5 kN**

Crack control check

Unfactored permanent load on slab	Gk=100 kN
Unfactored variable load on slab	Qk=40 kN
Permanent load factor	gamG=1.35
Variable load factor	gamQ=1.5
Factor Ψ2 for variable load	psi2=0.3
SLS stress in reinforcement σs	SLSs=500/1.15*(As/Aspr)*ratio*1 /delta=253.1 N/mm²
Design crack width	wk=0.3 mm
Max allowable SLS stress σs	SLSs2=TABLE 7.3 for pch=100 =320 N/mm²

The bar spacing 100 mm used complies with Table 7.3N of EC2 Part 1:2004 hence satisfactory.

Location: Ex2 - Simply supported slab

Bending in solid slabs (with comp.steel if reqd.), designed for a given width, with checks on minimum steel and span/effective-depth ratio

Calculations are in accordance with EC2: Design of concrete structures and assume the use of a simplified rectangular concrete stress-block and that the depth to the NA is restricted to 0.45d.

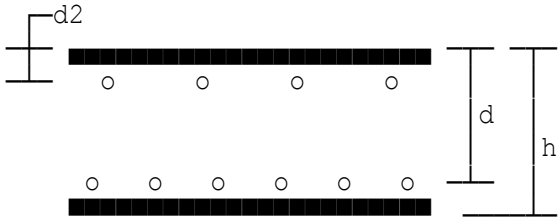

Design BM before redistribution Mbef=150 kNm
Section being analysed is considered as non-continuous.
Char yield strength of r'ment fyk=500 N/mm²
Max.aggregate size (for bar spc.) hagg=20 mm
Diameter of tension bars dia=16 mm
Diameter of distribution bars diad=8 mm
Effective depth of section d=245 mm
Breadth of section b=1000 mm

Main reinforcement

DESIGN	**Overall depth**	**300 mm**
SUMMARY	**Effective depth**	**245 mm**
FLEXURE	**Parameter K**	**0.0714**
	Parameter K'	**0.1684**
	Lever arm ratio z/d	**0.9324**
	Steel area (tension)	**1510 mm²**
	Steel percentage req.	**0.6164 %**
	Minimum area of steel	**408.9 mm²**
	Maximum area of steel	**12000 mm²**
	Distribution steel	**408.9 mm²/m**

Spacing of bars - tension reinforcement

Maximum pitch of bars (<3h) pchmx=400 mm
Calculated pitch of bars pitch=b*PI*dia^2/(4*As)=133.1 mm
Chosen spacing of tension bars pch=130 mm

Spacing of distribution steel

Diameter of distribution bars	diad=8 mm
Chosen spacing of distn. bars	pchd=120 mm

TENSION REINFORCEMENT	**Diameter of bars**	**16 mm**
	Spacing of bars	**130 mm**
	Area of steel required	**1510 mm²**
	Area of steel provided	**1546 mm²**
DISTRIBUTION REINFORCEMENT	**Diameter of bars**	**8 mm**
	Spacing of bars	**120 mm**
	Area of steel required	**408.9 mm²/m**
	Area of steel provided	**418 mm²/m**

Deflection check

Effective span of beam	L=4.3 m
Actual span to depth ratio	l'd=L*1000/d=17.55
Allowable span/depth ratio	l'da=k*N*F1*F2*F3=19.98

DESIGN	**Actual l/d ratio**	**17.55**
SUMMARY	**Basic l/d ratio**	**19.52**
DEFLECTION	**Span factor**	**1**
	Flange beam factor F1	**1**
	Long spans factor F2	**1**
	Steel stress factor F3	**1.024**
	Allowable l/d ratio	**19.98**

Note: Care should be taken with the EC2 values as the deflection equations used give unrealistically high values. National Annex to EC2 Part 1:2004, Table NA.5 gives span/effective depth ratios for highly stressed concrete (C30/37 & ρ=1.5%) as follows:

Simply supported spans	**14**
End spans	**18**
Interior spans	**20**

Shear check

Location for shear calculation:	250mm from support
Shear force due to ultimate load	VEd=125 kN
Term for shear resistance	vRdc=(rho1*fck)^(1/3)=2.227
Shear resistance	VRdc=CRdc*ks*vRdc*bw*d/1000=124.6 kN
Minimum stress	vmin=0.035*ks^1.5*fck^0.5=0.5438 N/mm²
Minimum shear resistance	VRdm=vmin*bw*d/1000=133.2 kN
Modified shear resistance	VRdc=VRdm=133.2 kN

SHEAR SUMMARY	**Design shear force**	**125 kN**
	Design shear resistance	**133.2 kN**

Crack control check

Unfactored permanent load on slab	Gk=50 kN
Unfactored variable load on slab	Qk=20 kN
Permanent load factor	gamG=1.35
Variable load factor	gamQ=1.5
Factor Ψ2 for variable load	psi2=0.3

SLS stress in reinforcement σs	SLSs=500/1.15*(As/Aspr)*ratio*1 /delta=243.9 N/mm²
Design crack width	wk=0.3 mm
Max allowable SLS stress σs	SLSs2=TABLE 7.3 for pch=130 =296 N/mm²

The bar spacing 130 mm used complies with Table 7.3N of EC2 Part 1:2004 hence satisfactory.

Location: Ex3 - Lightly loaded section

Bending in solid slabs (with comp.steel if reqd.), designed for a given width, with checks on minimum steel and span/effective-depth ratio

Calculations are in accordance with EC2: Design of concrete structures and assume the use of a simplified rectangular concrete stress-block and that the depth to the NA is restricted to 0.45d.

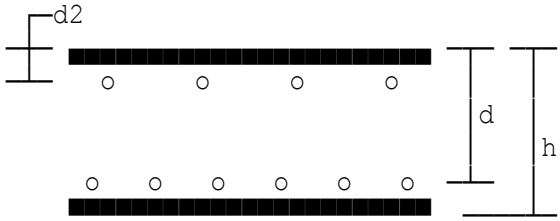

Design BM before redistribution Mbef=15 kNm
Section being analysed is considered as non-continuous.
Char yield strength of r'ment fyk=500 N/mm²
Max.aggregate size (for bar spc.) hagg=20 mm
Diameter of tension bars dia=10 mm
Diameter of distribution bars diad=10 mm
Effective depth of section d=165 mm
Breadth of section b=1000 mm

Main reinforcement

DESIGN SUMMARY FLEXURE	**Overall depth**	**200 mm**
	Effective depth	**165 mm**
	Parameter K	**0.0184**
	Parameter K'	**0.1684**
	Lever arm ratio z/d	**0.95**
	Steel area (tension)	**248.5 mm²**
	Steel percentage req.	**0.1506 %**
	Minimum area of steel	**248.5 mm²**
	Maximum area of steel	**8000 mm²**
	Distribution steel	**248.5 mm²/m**

Spacing of bars - tension reinforcement

Maximum pitch of bars (<3h) pchmx=400 mm
Calculated pitch of bars pitch=b*PI*dia^2/(4*As)=316 mm
Chosen spacing of tension bars pch=300 mm

TENSION (AND DISTRIBUTION) REINFORCEMENT	**Diameter of bars**	**10 mm**
	Spacing of bars	**300 mm**
	Area of steel required	**248.5 mm²**
	Area of steel provided	**261 mm²**

Deflection check

Effective span of beam	L=4.3 m
Actual span to depth ratio	l'd=L*1000/d=26.06
Allowable span/depth ratio	l'da=k*N*F1*F2*F3=121.7
Absolute value of span/depth	l'da=40*k=40

DESIGN	**Actual l/d ratio**	**26.06**
SUMMARY	**Basic l/d ratio**	**115.9**
DEFLECTION	**Span factor**	**1**
	Flange beam factor F1	**1**
	Long spans factor F2	**1**
	Steel stress factor F3	**1.05**
	Allowable l/d ratio	**40**

NOTE: Care should be taken with the EC2 values as the deflection equations used give unrealistically high values. National Annex to EC2 Part 1:2004, Table NA.5 gives span/effective depth ratios for lightly stressed concrete (C30/37 & ρ=0.5%) as follows:

Simply supported spans	**20**
End spans	**26**
Interior spans	**30**

Shear check

Location for shear calculation:	150 mm from support
Shear force due to ultimate load	VEd=14 kN
Term for shear resistance	vRdc=(rho1*fck)^(1/3)=1.334
Shear resistance	VRdc=CRdc*ks*vRdc*bw*d/1000=52.82 kN
Minimum stress	vmin=0.035*ks^1.5*fck^0.5=0.5422 N/mm²
Minimum shear resistance	VRdm=vmin*bw*d/1000=89.47 kN
Modified shear resistance	VRdc=VRdm=89.47 kN

SHEAR SUMMARY	**Design shear force**	**14 kN**
	Design shear resistance	**89.47 kN**

Crack control check

Location: Ex4 - End span

Bending in solid slabs (with comp.steel if reqd.), designed for a given width, with checks on minimum steel and span/effective-depth ratio

Calculations are in accordance with EC2: Design of concrete structures and assume the use of a simplified rectangular concrete stress-block and that the depth to the NA is restricted to 0.45d.

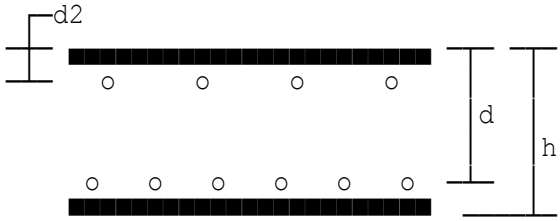

Design BM before redistribution Mbef=85 kNm
Section being analysed is considered as continuous.
Section considered has a sagging moment
Char yield strength of r'ment fyk=500 N/mm²
Max.aggregate size (for bar spc.) hagg=20 mm
Diameter of tension bars dia=16 mm
Diameter of distribution bars diad=10 mm
Effective depth of section d=185 mm
Breadth of section b=1000 mm

Main reinforcement

DESIGN	**Overall depth**	**225 mm**
SUMMARY	**Effective depth**	**185 mm**
FLEXURE	**Parameter K**	**0.0828**
	Parameter K'	**0.1684**
	Lever arm ratio z/d	**0.9207**
	Steel area (tension)	**1148 mm²**
	Steel percentage req.	**0.6204 %**
	Minimum area of steel	**278.6 mm²**
	Maximum area of steel	**9000 mm²**
	Distribution steel	**278.6 mm²/m**

Spacing of bars - tension reinforcement

Maximum pitch of bars (<3h) pchmx=400 mm
Calculated pitch of bars pitch=b*PI*dia^2/(4*As)=175.2 mm
Chosen spacing of tension bars pch=175 mm

Spacing of distribution steel

Diameter of distribution bars	diad=10 mm
Chosen spacing of distn. bars	pchd=280 mm

TENSION REINFORCEMENT	**Diameter of bars**	**16 mm**
	Spacing of bars	**175 mm**
	Area of steel required	**1148 mm²**
	Area of steel provided	**1148 mm²**
DISTRIBUTION REINFORCEMENT	**Diameter of bars**	**10 mm**
	Spacing of bars	**280 mm**
	Area of steel required	**278.6 mm²/m**
	Area of steel provided	**280 mm²/m**

Deflection check

Effective span of beam	L=4.3 m
Actual span to depth ratio	l'd=L*1000/d=23.24
Allowable span/depth ratio	l'da=k*N*F1*F2*F3=23.73

DESIGN	**Actual l/d ratio**	**23.24**
SUMMARY	**Basic l/d ratio**	**18.25**
DEFLECTION	**Span factor**	**1.3**
	Flange beam factor F1	**1**
	Long spans factor F2	**1**
	Steel stress factor F3	**1**
	Allowable l/d ratio	**23.73**

Note: Care should be taken with the EC2 values as the deflection equations used give unrealistically high values. National Annex to EC2 Part 1:2004, Table NA.5 gives span/effective depth ratios for highly stressed concrete (C30/37 & ρ=1.5%) as follows:

Simply supported spans	**14**
End spans	**18**
Interior spans	**20**

Shear check

Location for shear calculation:	200 mm from support
Shear force due to ultimate load	VEd=68 kN
Term for shear resistance	vRdc=(rho1*fck)^(1/3)=2.104
Shear resistance	VRdc=CRdc*ks*vRdc*bw*d/1000=93.4 kN
Minimum stress	vmin=0.035*ks^1.5*fck^0.5=0.5422 N/mm²
Minimum shear resistance	VRdm=vmin*bw*d/1000=100.3 kN
Modified shear resistance	VRdc=VRdm=100.3 kN

SHEAR SUMMARY	**Design shear force**	**68 kN**
	Design shear resistance	**100.3 kN**

Crack control check

Unfactored permanent load on slab	Gk=40 kN
Unfactored variable load on slab	Qk=20 kN
Permanent load factor	gamG=1.35
Variable load factor	gamQ=1.5
Factor Ψ2 for variable load	psi2=0.3

SLS stress in reinforcement σs	SLSs=500/1.15*(As/Aspr)*ratio*1 /delta=238.1 N/mm²
Design crack width	wk=0.3 mm
Max allowable SLS stress σs	SLSs1=TABLE 7.2 for dia=16 =240 N/mm²

The bar size 16 mm used complies with Table 7.2N of EC2 Part 1:2004 hence satisfactory.

Location: Ex5 - Simply supported slab with compression reinforcement

Bending in solid slabs (with comp.steel if reqd.),

designed for a given width, with checks on minimum steel

and span/effective-depth ratio

Calculations are in accordance with EC2: Design of concrete structures and assume the use of a simplified rectangular concrete stress-block and that the depth to the NA is restricted to 0.45d.

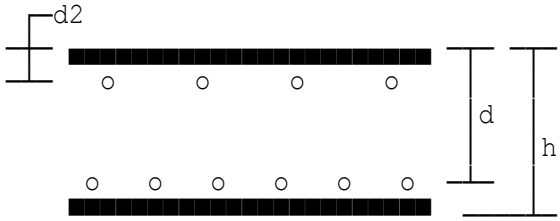

Design BM before redistribution Mbef=375 kNm
Section being analysed is considered as non-continuous.
Char yield strength of r'ment fyk=500 N/mm²
Max.aggregate size (for bar spc.) hagg=20 mm
Diameter of tension bars dia=20 mm
Diameter of distribution bars diad=12 mm
Effective depth of section d=235 mm
Breadth of section b=1000 mm

Main reinforcement

Diameter of compression bars diac=20 mm
Depth to compression steel d2=45 mm

DESIGN	**Overall depth**	**300 mm**
SUMMARY	**Effective depth**	**235 mm**
FLEXURE	**Parameter K**	**0.1698**
	Parameter K'	**0.1684**
	Lever arm ratio z/d	**0.8185**
	Steel area (tension)	**4485 mm²**
	Steel area (compress.)	**600 mm²**
	Steel percentage req.	**1.908 %**
	Minimum area of steel	**428.8 mm²**
	Maximum area of steel	**12000 mm²**
	Distribution steel	**896.9 mm²/m**

Spacing of bars - tension reinforcement

Maximum pitch of bars (<3h) pchmx=400 mm
Calculated pitch of bars pitch=b*PI*dia^2/(4*As)=70.05 mm
Chosen spacing of tension bars pch=70 mm

Spacing of distribution steel

Diameter of distribution bars	diad=12 mm
Chosen spacing of distn. bars	pchd=125 mm
Chosen spacing of compress bars	pchc=250 mm

TENSION REINFORCEMENT	**Diameter of bars**	**20 mm**
	Spacing of bars	**70 mm**
	Area of steel required	**4485 mm²**
	Area of steel provided	**4487 mm²**
DISTRIBUTION REINFORCEMENT	**Diameter of bars**	**12 mm**
	Spacing of bars	**125 mm**
	Area of steel required	**896.9 mm²/m**
	Area of steel provided	**904 mm²/m**
COMPRESSION	**Diameter of bars**	**20 mm**
(AND DISTRIBUTION)	**Spacing of bars**	**250 mm**
REINFORCEMENT	**Area of steel required**	**600 mm²**
	Area of steel provided	**1256 mm²**

Deflection check

Effective span of beam	L=4.3 m
Unfactored permanent load on slab	Gk=460 kN
Unfactored variable load on slab	Qk=230 kN
Permanent load factor	gamG=1.35
Variable load factor	gamQ=1.5
Actual span to depth ratio	l'd=L*1000/d=18.3
Factor Ψ2 for variable load	psi2=0.3
SLS stress in reinforcement σs	SLSs=500/1.15*(As/Aspr)*ratio*1 /delta=238 N/mm²
Allowable span/depth ratio	l'da=k*N*F1*F2*F3=18.57

DESIGN	**Actual l/d ratio**	**18.3**
SUMMARY	**Basic l/d ratio**	**14.26**
DEFLECTION	**Span factor**	**1**
	Flange beam factor F1	**1**
	Long spans factor F2	**1**
	Steel stress factor F3	**1.303**
	Allowable l/d ratio	**18.57**

Note: Care should be taken with the EC2 values as the deflection equations used give unrealistically high values. National Annex to EC2 Part 1:2004, Table NA.5 gives span/effective depth ratios for highly stressed concrete (C30/37 & ρ=1.5%) as follows:

Simply supported spans	**14**
End spans	**18**
Interior spans	**20**

Shear check

Location for shear calculation:	250mm from support
Shear force due to ultimate load	VEd=125 kN
Term for shear resistance	vRdc=(rho1*fck)^(1/3)=3.367
Shear resistance	VRdc=CRdc*ks*vRdc*bw*d/1000=182.6 kN
Minimum stress	vmin=0.035*ks^1.5*fck^0.5=0.5901 N/mm²
Minimum shear resistance	VRdm=vmin*bw*d/1000=138.7 kN

SHEAR SUMMARY	**Design shear force**	**125 kN**
	Design shear resistance	**182.6 kN**

Location: High shear on moderately thick slab (High-yield steel)

Shear in longitudinal zone of solid slab of given width

Since distance from support varies throughout zone considered, enhancement of shear resistance due to proximity to support is not applicable.

The calculations for shear in the zone of solid slab are in accordance with Clauses 3.5.5 of BS8110 throughout.

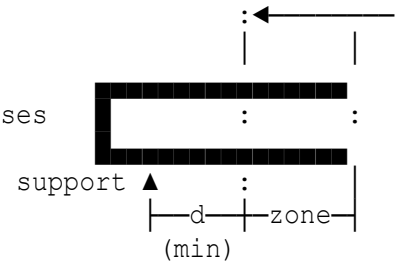

In the case of a uniform load, the design section to be considered need not be less than a minimum distance from support equal to effective depth.

Design to BS8110(1997) with partial safety factor for steel gammaS=1.15

Effective depth	d=400 mm
Breadth of slab zone	b=1000 mm
Characteristic concrete strength	fcu=30 N/mm²
Diameter of tension bars	dia=25 mm
Number of tension bars	nbars=4
Shear force due to ult.loads	V=900 kN

Design shear stress of 2.25 N/mm² exceeds critical stress of 0.52979 N/mm², so links to resist balance of shear forces are necessary.

Characteristic strength of links	fyv=500 N/mm²
Number of transverse legs	nlegs=4
Diameter of link legs	dial=12 mm

Use 4 No. 12 mm dia. legs transversely (fyv=500 N/mm²)
and spaced at 110 mm centres in direction of span.
Transverse spacing must not exceed effective depth of 400 mm

Location: High shear on thin wide slab (High-yield steel)

Shear in longitudinal zone of solid slab of given width

Since distance from support varies throughout zone considered, enhancement of shear resistance due to proximity to support is not applicable.

The calculations for shear in the zone of solid slab are in accordance with Clauses 3.5.5 of BS8110 throughout.

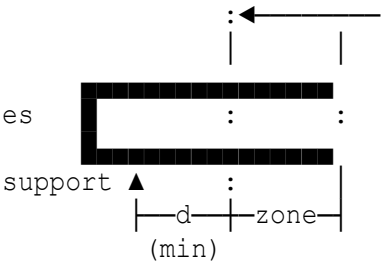

In the case of a uniform load, the design section to be considered need not be less than a minimum distance from support equal to effective depth.

Design to BS8110(1997) with partial safety factor for steel gammaS=1.15

Effective depth	d=200 mm
Breadth of slab zone	b=5000 mm
Characteristic concrete strength	fcu=35 N/mm²
Diameter of tension bars	dia=16 mm
Number of tension bars	nbars=50
Shear force due to ult.loads	V=2200 kN

Design shear stress of 2.2 N/mm² exceeds critical stress of 0.84227 N/mm², so links to resist balance of shear forces are necessary.

Characteristic strength of links	fyv=500 N/mm²
Number of transverse legs	nlegs=26
Diameter of link legs	dial=8 mm

Use 26 No. 8 mm dia. legs transversely (fyv=500 N/mm²)
and spaced at 80 mm centres in direction of span.
Transverse spacing must not exceed effective depth of 200 mm

Location: Low shear on deep narrow slab (High-yield steel)

Shear in longitudinal zone of solid slab of given width

Since distance from support varies throughout zone considered, enhancement of shear resistance due to proximity to support is not applicable.

The calculations for shear in the zone of solid slab are in accordance with Clauses 3.5.5 of BS8110 throughout.

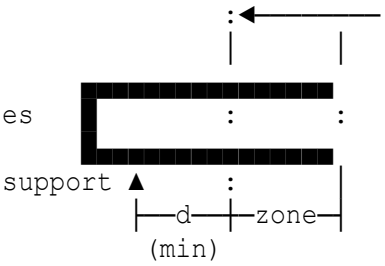

In the case of a uniform load, the design section to be considered need not be less than a minimum distance from support equal to effective depth.

Design to BS8110(1997) with partial safety factor for steel gammaS=1.15

Effective depth	d=1000 mm
Breadth of slab zone	b=200 mm
Characteristic concrete strength	fcu=30 N/mm²
Diameter of tension bars	dia=20 mm
Number of tension bars	nbars=2
Shear force due to ult.loads	V=50 kN

WARNING:
As vc=0.36309 N/mm² exceeds v=0.25 N/mm² no shear links are needed.

Location: Low shear slab

Design data

Design shear force	VEd=51 kN
Overall depth of section	h=250 mm
Effective depth of section	d=204 mm
Effective breadth for shear	bw=1000 mm
Char yield strength (reinf'ment)	fyk=500 N/mm²
Diameter of tension bars	dia=10 mm
Number of tension bars	nbars=10
Term for shear resistance	vRdc=(rho1*fck)^(1/3)=2.3096
Shear resistance	VRdc=CRdc*ks*vRdc*bw*d/1000=112.52 kN
Minimum stress	vmin=0.035*ks^1.5*fck^0.5
	=0.55587 N/mm²
Minimum shear resistance	VRdm=vmin*bw*d/1000=113.4 kN
Modified shear resistance	VRdc=VRdm=113.4 kN

SHEAR SUMMARY	**Design shear force**	**51 kN**
	Design shear resistance	**113.4 kN**

Location: Shallow/wide rib. High shear. High-yield steel.

Shear in rib of ribbed slab (no enhancement)

As distance from support varies throughout zone considered, enhancement of shear resistance due to proximity to support is not applicable.

Calculations for ribbed slab in accordance with Clauses 3.6.4 and 3.6.1.3 of BS8110.

Design to BS8110(1997) with partial safety factor for steel gammaS=1.15

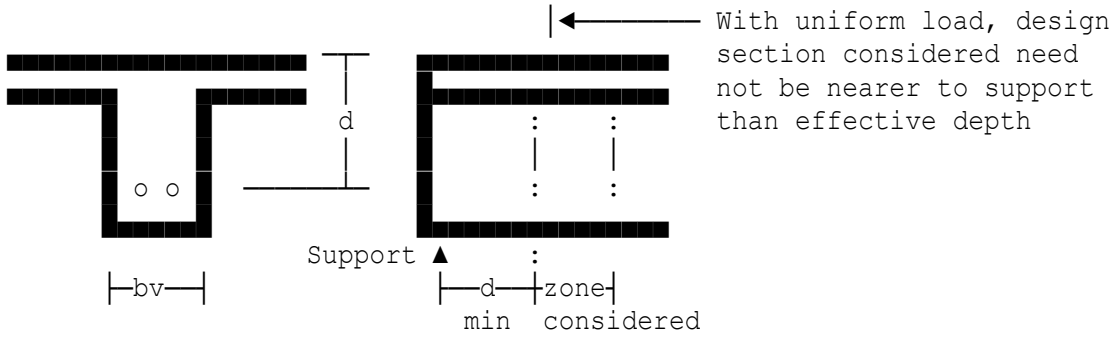

Effective depth	d=300 mm
Average rib width	bv=400 mm
Characteristic concrete strength	fcu=30 N/mm²
Diameter of tension bars	dia=20 mm
Number of tension bars in rib	nbars=3
Ultimate shear force in rib	V=320 kN

Design shear stress of 2.6667 N/mm² exceeds critical stress of 0.66585 N/mm², so links to resist balance of shear forces are essential.

Characteristic strength of links	fyv=500 N/mm²
Number of transverse legs	nlegs=4
Diameter of link legs	dial=10 mm

LINK SUMMARY	**Reinforcement strength**	**500 N/mm²**
	Bar diameter	**10 mm**
	Number of legs	**4**
	Area	**314 mm²**
	Centres	**170 mm**

Location: Large rib. Low shear. High-yield steel.

Shear in rib of ribbed slab (no enhancement)

As distance from support varies throughout zone considered, enhancement of shear resistance due to proximity to support is not applicable.

Calculations for ribbed slab in accordance with Clauses 3.6.4 and 3.6.1.3 of BS8110.

Design to BS8110(1997) with partial safety factor for steel gammaS=1.15

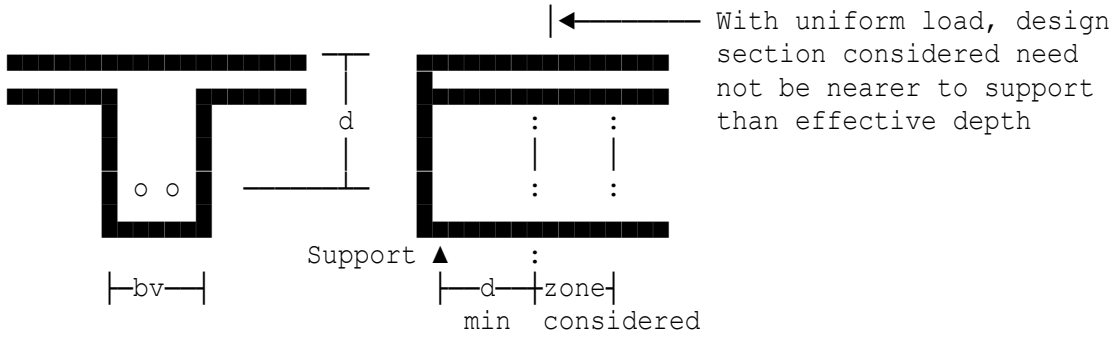

Effective depth	d=600 mm
Average rib width	bv=300 mm
Characteristic concrete strength	fcu=25 N/mm²
Diameter of tension bars	dia=20 mm
Number of tension bars in rib	nbars=3
Ultimate shear force in rib	V=50 kN

Since design shear stress of 0.27778 N/mm² is less than critical shear stress of 0.46029 N/mm², no special shear reinforcement is required.

However as there are 3 bars in rib, links to ensure cover are recommended at 1 to 1.5m spacing (See Clause 3.6.6.3).

Location: Small rib. High shear. High-yield steel.

Shear in rib of ribbed slab (no enhancement)

As distance from support varies throughout zone considered, enhancement of shear resistance due to proximity to support is not applicable.

Calculations for ribbed slab in accordance with Clauses 3.6.4 and 3.6.1.3 of BS8110.

Design to BS8110(1997) with partial safety factor for steel gammaS=1.15

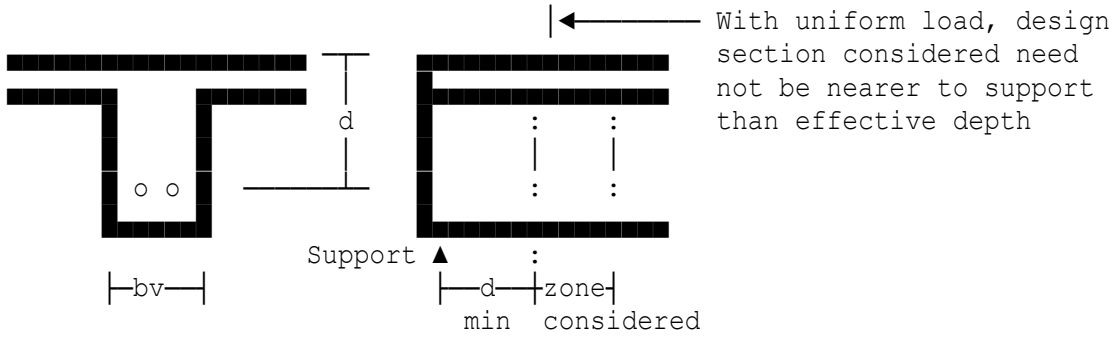

Effective depth	d=300 mm
Average rib width	bv=150 mm
Characteristic concrete strength	fcu=35 N/mm²
Diameter of tension bars	dia=20 mm
Number of tension bars in rib	nbars=2
Ultimate shear force in rib	V=210 kN

Design shear stress of 4.6667 N/mm² exceeds critical stress of 0.84915 N/mm², so links to resist balance of shear forces are essential.

Characteristic strength of links	fyv=500 N/mm²
Number of transverse legs	nlegs=2
Diameter of link legs	dial=10 mm

LINK SUMMARY	**Reinforcement strength**	**500 N/mm²**
	Bar diameter	**10 mm**
	Number of legs	**2**
	Area	**157 mm²**
	Centres	**110 mm**

Location: Ex1 - Shallow/wide rib. High shear.

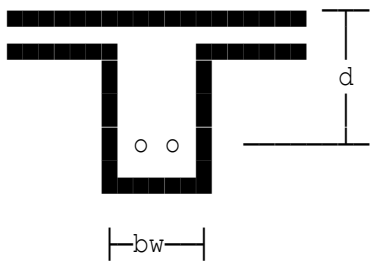

Shear in ribbed slab

Calculations in accordance with BS EN 1992-1-1:2004.

Effective depth	d=300 mm
Average rib width	bw=400 mm
Char cylinder compress strength	fck=30 N/mm²
Char yield strength of links	fyk=500 N/mm²
Diameter of tension bars	dia=20 mm
Number of tension bars in rib	nbars=3
Ultimate shear force in rib	VEd=320 kN

Shear reinforcement

Partial safety factor for r'ment	gams=1.15
Partial safety factor for conc.	gamc=1.5
Design yield strength of links	fyd=fyk/gams=434.78 N/mm²
Minimum ratio area to spacing	Aswm=0.08*bw*fck^0.5/fyk=0.35054
Number of shear legs	nsl=2
Diameter of link legs	dial=10 mm
Area of shear legs	Asw=nsl*PI/4*dial^2=157.08 mm²
Spacing of links	smax=INT(Asw/Asw's)=144 mm
Chosen spacing	s=140 mm

Check crushing strength

Angle of inclination of strut theta'=22°
compute comp=cot(θ)=1/tan(θ)=2.4751
Maximum shear resistance:
VRdmax=0.36*bw*d*(1-fck/250)*fck/((comp+1/comp)*1000)=396.12 kN
As VEd ≤ VRdmax (320 kN ≤ 396.12 kN), design shear force OK.

SHEAR SUMMARY

Shear force	**320 kN**
Design shear strength	**2.963 N/mm²**
Concrete strut capacity	**3.2736 N/mm²**
Area/spacing ratio	**1.0904**
Area of links	**157 mm²**
Maximum spacing	**144 mm**
Actual spacing	**140 mm**

Location: Ex2 - Large rib. Low shear. High-yield steel.

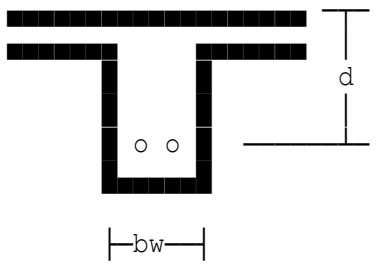

Shear in ribbed slab

Calculations in accordance with BS EN 1992-1-1:2004.

Effective depth	d=600 mm
Average rib width	bw=400 mm
Char cylinder compress strength	fck=25 N/mm²
Char yield strength of links	fyk=500 N/mm²
Diameter of tension bars	dia=20 mm
Number of tension bars in rib	nbars=3
Ultimate shear force in rib	VEd=320 kN

Shear reinforcement

Partial safety factor for r'ment	gams=1.15
Partial safety factor for conc.	gamc=1.5
Design yield strength of links	fyd=fyk/gams=434.78 N/mm²
Minimum ratio area to spacing	Aswm=0.08*bw*fck^0.5/fyk=0.32
Number of shear legs	nsl=2
Diameter of link legs	dial=8 mm
Area of shear legs	Asw=nsl*PI/4*dial^2=100.53 mm²
Spacing of links	smax=INT(Asw/Asw's)=184 mm
Chosen spacing	s=175 mm

Check crushing strength

Angle of inclination of strut theta'=22°
compute comp=cot(θ)=1/tan(θ)=2.4751
Maximum shear resistance:
VRdmax=0.36*bw*d*(1-fck/250)*fck/((comp+1/comp)*1000)=675.21 kN
As VEd ≤ VRdmax (320 kN ≤ 675.21 kN), design shear force OK.

SHEAR SUMMARY

Shear force	**320 kN**
Design shear strength	**1.4815 N/mm²**
Concrete strut capacity	**2.79 N/mm²**
Area/spacing ratio	**0.54519**
Area of links	**100 mm²**
Maximum spacing	**184 mm**
Actual spacing	**175 mm**

Location: Ex3 - Small rib. High shear. High-yield steel.

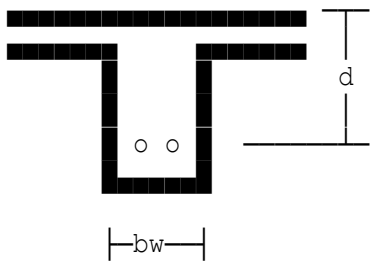

Shear in ribbed slab

Calculations in accordance with BS EN 1992-1-1:2004.

Effective depth	d=300 mm
Average rib width	bw=400 mm
Char cylinder compress strength	fck=35 N/mm²
Char yield strength of links	fyk=500 N/mm²
Diameter of tension bars	dia=20 mm
Number of tension bars in rib	nbars=2
Ultimate shear force in rib	VEd=480 kN

Shear reinforcement

Partial safety factor for r'ment	gams=1.15
Partial safety factor for conc.	gamc=1.5
Design yield strength of links	fyd=fyk/gams=434.78 N/mm²
Minimum ratio area to spacing	Aswm=0.08*bw*fck^0.5/fyk=0.37863
Number of shear legs	nsl=2
Diameter of link legs	dial=12 mm
Area of shear legs	Asw=nsl*PI/4*dial^2=226.19 mm²
Spacing of links	smax=INT(Asw/Asw's)=125 mm

Check crushing strength

Angle of inclination of strut theta'=23.792°
compute comp=cot(θ)=1/tan(θ)=2.2681
Maximum shear resistance:
VRdmax=0.36*bw*d*(1-fck/250)*fck/((comp+1/comp)*1000)=480 kN
As VEd ≤ VRdmax (480 kN ≤ 480 kN), design shear force OK.

SHEAR SUMMARY

Shear force	**480 kN**
Design shear strength	**4.4444 N/mm²**
Concrete strut capacity	**3.7324 N/mm²**
Area/spacing ratio	**1.8028**
Area of links	**226 mm²**
Maximum spacing	**125 mm**
Actual spacing	**125 mm**

Location: Ex4 - Low shear (no shear links needed).

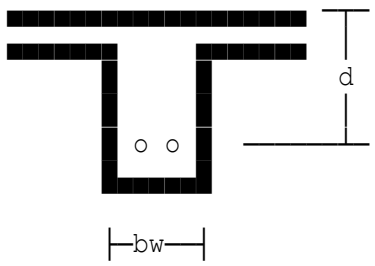

Shear in ribbed slab

Calculations in accordance with BS EN 1992-1-1:2004.

Effective depth	d=600 mm
Average rib width	bw=300 mm
Char cylinder compress strength	fck=20 N/mm²
Char yield strength of links	fyk=500 N/mm²
Diameter of tension bars	dia=20 mm
Number of tension bars in rib	nbars=3
Ultimate shear force in rib	VEd=50 kN

As VEd < VRdc (50 kN < 74.535 kN), shear r'ment is not required.
However, consider providing nominal links to allow for fabrication.

Location: Large square slab with all edges free

Design moments in uniformly loaded two-way slabs to BS8110

Calculation of design moments according to Clauses 3.5.3 of BS8110.

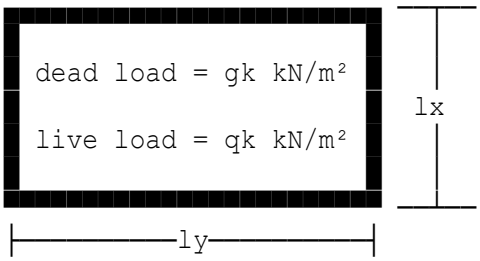

Length of shorter side	lx=20 m
Length of longer side	ly=20 m
Characteristic dead load	gk=4 kN/m²
Characteristic imposed load	qk=5 kN/m²

All four edges simply supported

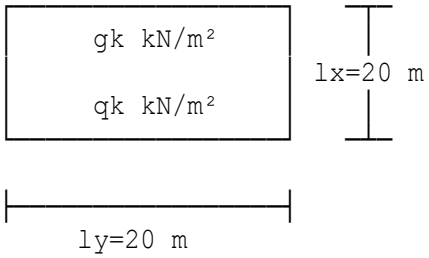

Design moment for short span lx	msxm=alpsx*n*ly*lx^2=6800 kNm
Design moment for long span ly	msym=alpsy*n*lx^3=6800 kNm

Reinforcement must be provided over full width.
No torsion steel is required.

Location: Long rectangular slab with all edges fixed

Design moments in uniformly loaded two-way slabs to BS8110

Calculation of design moments according to Clauses 3.5.3 of BS8110.

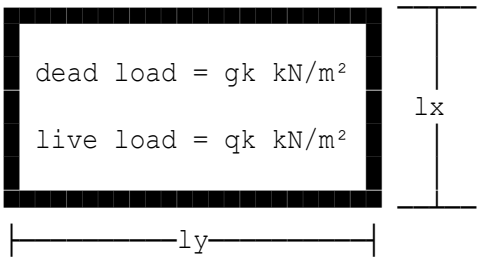

Length of shorter side	lx=10 m
Length of longer side	ly=20 m
Characteristic dead load	gk=4 kN/m²
Characteristic imposed load	qk=5 kN/m²

All four edges continuous

Coefficients from Table 3.14.

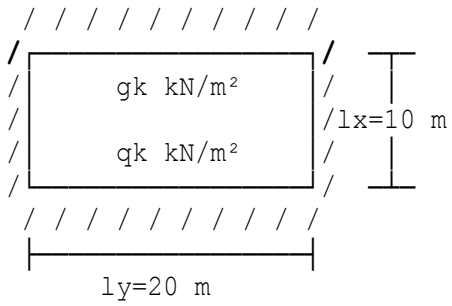

Design moment for short span lx (over width of 15 m

At continuous edges	msxe=betsxn*n*mstrwy*lx^2=1285.2 kNm
At midspan	msxm=betsxp*n*mstrwy*lx^2=979.2 kNm

Design moment for long span ly (over width of 7.5 m

At continuous edges	msye=betsyn*n*mstrwx*lx^2=326.4 kNm
At midspan	msym=betsyp*n*mstrwx*lx^2=244.8 kNm

Location: Slab with two adjacent edges fixed

Design moments in uniformly loaded two-way slabs to BS8110

Calculation of design moments according to Clauses 3.5.3 of BS8110.

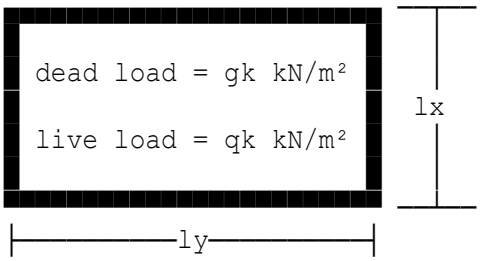

Length of shorter side	lx=6 m
Length of longer side	ly=9 m
Characteristic dead load	gk=4 kN/m²
Characteristic imposed load	qk=5 kN/m²

Two adjacent edges discontinuous

Coefficients from Table 3.14.

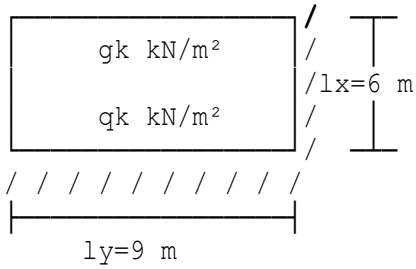

Design moment for short span lx (over width of 6.75 m

At continuous edge msxe=betsxn*n*mstrwy*lx^2=257.77 kNm
At midspan msxm=betsxp*n*mstrwy*lx^2=194.98 kNm

Design moment for long span ly (over width of 4.5 m

At continuous edge msye=betsyn*n*mstrwx*lx^2=99.144 kNm
At midspan msym=betsyp*n*mstrwx*lx^2=74.909 kNm

Location: Large square slab with all edges free

Design moments in uniformly loaded two-way slabs to EC2

Bending moment coefficients from Table 5.3 of the ISE "Manual for the design of concrete building structures to Eurocode 2" will be used in the following calculations.

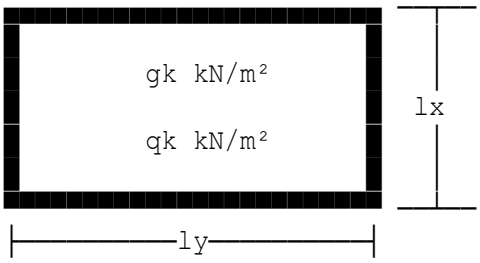

gk = permanent load
qk = variable load

Length of shorter side	lx=20 m
Length of longer side	ly=20 m
Characteristic permanent load	gk=4 kN/m²
Characteristic variable load	qk=5 kN/m²

All four edges simply supported

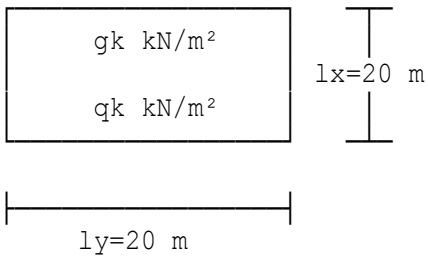

Design moment for short span lx	msxm=alpsx*n*ly*lx^2=6450 kNm
Design moment for long span ly	msym=alpsy*n*lx^3=6450 kNm

Reinforcement must be provided over full width.
No torsion steel is required.

Location: Long rectangular slab with all edges fixed

Design moments in uniformly loaded two-way slabs to EC2

Bending moment coefficients from Table 5.3 of the ISE "Manual for the design of concrete building structures to Eurocode 2" will be used in the following calculations.

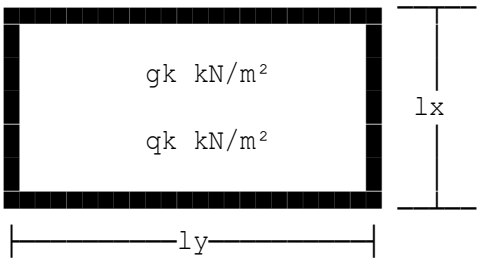

gk = permanent load
qk = variable load

Length of shorter side	lx=10 m
Length of longer side	ly=20 m
Characteristic permanent load	gk=4 kN/m²
Characteristic variable load	qk=5 kN/m²

All four edges continuous

Coefficients from Table 5.3

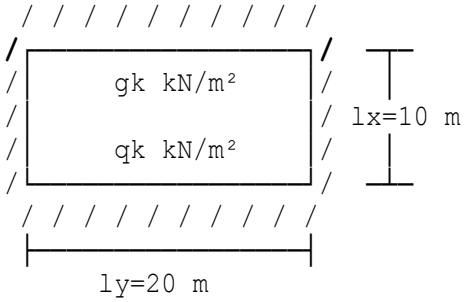

Design moment for short span lx - over width of 15 m

At continuous edges	msxe=betsxn*n*mstrwy*lx^2=1219.1 kNm
At midspan	msxm=betsxp*n*mstrwy*lx^2=928.8 kNm

Design moment for long span ly - over width of 7.5 m

At continuous edges	msye=betsyn*n*mstrwx*lx^2=309.6 kNm
At midspan	msym=betsyp*n*mstrwx*lx^2=232.2 kNm

Location: Slab with two adjacent edges fixed

Design moments in uniformly loaded two-way slabs to EC2

Bending moment coefficients from Table 5.3 of the ISE "Manual for the design of concrete building structures to Eurocode 2" will be used in the following calculations.

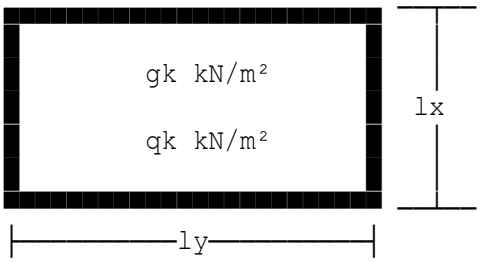

gk = permanent load
qk = variable load

Length of shorter side	lx=6 m
Length of longer side	ly=9 m
Characteristic permanent load	gk=4 kN/m²
Characteristic variable load	qk=5 kN/m²

Two adjacent edges discontinuous

Coefficients from Table 5.3

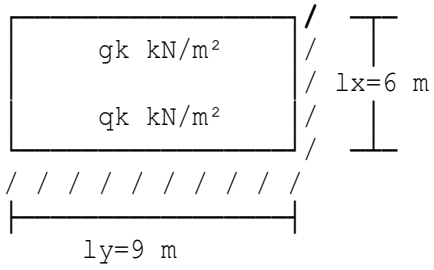

Design moment for short span lx - over width of 6.75 m

At continuous edge	msxe=betsxn*n*mstrwy*lx^2=244.51 kNm
At midspan	msxm=betsxp*n*mstrwy*lx^2=184.95 kNm

Design moment for long span ly - over width of 4.5 m

At continuous edge	msye=betsyn*n*mstrwx*lx^2=94.041 kNm
At midspan	msym=betsyp*n*mstrwx*lx^2=71.053 kNm

Location: Typical two-way slab with all edges fixed

Design of two-way slabs rectangular slabs supporting uniform loads

Design to BS8110(1997) with partial safety factor for steel gammaS=1.15

Calculation of design moments in accordance with Clauses 3.5.3 of BS8110 throughout.

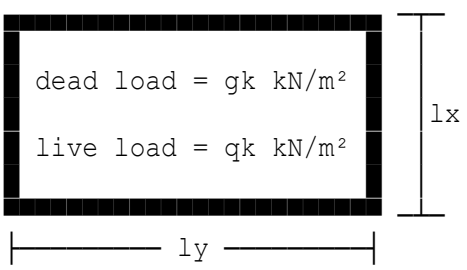

Length of shorter side	lx=6 m
Length of longer side	ly=8 m
Characteristic dead load	gk=4 kN/m²
Characteristic imposed load	qk=5 kN/m²
Overall depth of slab	h=200 mm
Characteristic concrete strength	fcu=30 N/mm²
Characteristic strength of steel	fy=500 N/mm²
Bond type (0,1 or 2)	Type=2
Size of upper bars in x-direction	diaux=20 mm
Size of lower bars in x-direction	diax=20 mm
Size of upper bars in y-direction	diauy=16 mm
Size of lower bars in y-direction	diay=16 mm
Designated exposure class is XC2	
Specified fixing tolerance	tol=10 mm
Designated exposure class is XC2	
Specified fixing tolerance	tol=10 mm
Nominal cover at top of slab	tcover=35 mm
Nominal cover at bottom of slab	bcover=35 mm

Effective depths:

Of top steel:	in x-direction	dux=155 mm
	in y-direction	duy=dux-(diaux+diauy)/2=137 mm
Of bottom steel:	in x-direction	dx=155 mm
	in y-direction	dy=dx-(diax+diay)/2=137 mm

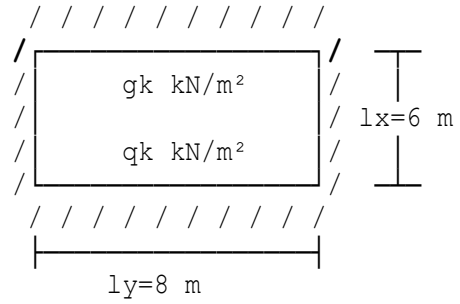

All four edges continuous

Coefficients from Table 3.14

```
Chosen pitch for tension steel    pitchC=480 mm
Chosen pitch for tension steel    pitchC=420 mm
Chosen pitch for tension steel    pitchC=480 mm
Chosen pitch for tension steel    pitchC=420 mm

Mod.factor for tension steel:
From equation 7 (Table 3.10)      modf1=0.55+(477-fs)/(120*(0.9
                                        +M'bd2))=2.3092
but this cannot exceed 2, so      modf1=2
Mod.factor for no comp.steel      modf2=1
Thus maximum permissible
  span/effective-depth ratio      ps'd=bs'd*modf1*modf2=52
Actual span/effective-depth ratio as'd=1000*span/dx=38.71
This does not exceed permiss.ratio of 52,  and is thus acceptable.
```

SUMMARY OF REINFORCEMENT REQUIRED (fy=500 N/mm²)

At edges in x-direction:

Characteristic strength	**500 N/mm²**
Area of steel required Asxe	**2171.9 mm²**
Area of steel provided Aspxe	**4084.1 mm²**
Percentage of steel provided	**0.34034 %**
Size of bars	**20 mm**
Number of bars provided	**13**
Spacing of bars	**480 mm centres**
Minimum bond length required	**425 mm**
Effective depth adopted	**155 mm**
Weight of steel provided	**32.06 kg/m run**

At midspan in x-direction:

Characteristic strength	**500 N/mm²**
Area of steel required Asxm	**1636.5 mm²**
Area of steel provided Aspxm	**4084.1 mm²**
Percentage of steel provided	**0.34034 %**
Size of bars	**20 mm**
Number of bars provided	**13**
Spacing of bars	**480 mm centres**
Minimum bond length required	**320 mm**
Effective depth adopted	**155 mm**
Weight of steel provided	**32.06 kg/m run**

At edges in y-direction:

Characteristic strength	**500 N/mm²**
Area of steel required Asye	**1245.9 mm²**
Area of steel provided Aspye	**2211.7 mm²**
Percentage of steel provided	**0.24574 %**
Size of bars	**16 mm**
Number of bars provided	**11**
Spacing of bars	**420 mm centres**
Minimum bond length required	**360 mm**
Effective depth adopted	**137 mm**
Weight of steel provided	**17.362 kg/m run**

At midspan in y-direction:

Characteristic strength	**500 N/mm²**
Area of steel required Asym	**1170 mm²**
Area of steel provided Aspym	**2211.7 mm²**
Percentage of steel provided	**0.24574 %**
Size of bars	**16 mm**
Number of bars provided	**11**
Spacing of bars	**420 mm centres**
Minimum bond length required	**270 mm**
Effective depth adopted	**137 mm**
Weight of steel provided	**17.362 kg/m run**

Minimum tension reinforcement in edge strips

Min.tension area (Table 3.25)	Asmin=permin/100*1000*h
	=260 mm² per metre
Diameter of distribution bars	diamin=12 mm
Maximum pitch (c.to c.of bars)	pchm=3*duy+diamin=423 mm,
As this is less than 750 mm, this	is satisfactory.
Chosen pitch for tension steel	pitchC=420 mm

Minimum reinforcement in edge strips:

Characteristic strength	**500 N/mm²**
Minimum area required Asmin	**260 mm² per m**
Steel area provided Asmpro	**269 mm² per m**
Percentage of steel provided	**0.1345 %**
Size of bars	**12 mm**
Spacing of bars	**420 mm centres**
Minimum lap length required	**300 mm**
Weight of steel provided	**2.1117 kg/m²**

No torsion reinforcement is required (see Rule 7 in Cl. 3.5.3.5).

Location: Large thick two-way slab reinforced with mild steel

Design of two-way slabs rectangular slabs supporting uniform loads

Design to BS8110(1997) with partial safety factor for steel gammaS=1.15

Calculation of design moments in accordance with Clauses 3.5.3 of BS8110 throughout.

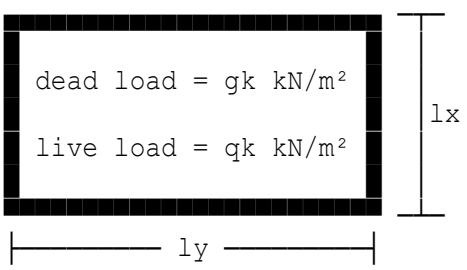

Length of shorter side	lx=10 m
Length of longer side	ly=20 m
Characteristic dead load	gk=3 kN/m²
Characteristic imposed load	qk=4 kN/m²
Overall depth of slab	h=500 mm
Characteristic concrete strength	fcu=25 N/mm²
Characteristic strength of steel	fy=250 N/mm²
Specified min.steel percentage	permin=0.24 %
Specified min.slab thickness	mindep=250 mm
Bond type (0,1 or 2)	Type=0
Size of upper bars in x-direction	diaux=25 mm
Size of lower bars in x-direction	diax=25 mm
Size of upper bars in y-direction	diauy=20 mm
Size of lower bars in y-direction	diay=20 mm
Designated exposure class is XC1	
Specified fixing tolerance	tol=10 mm
Designated exposure class is XC1	
Specified fixing tolerance	tol=10 mm
Nominal cover at top of slab	tcover=25 mm
Nominal cover at bottom of slab	bcover=25 mm
Effective depths:	
Of top steel: in x-direction	dux=462.5 mm
in y-direction	duy=dux-(diaux+diauy)/2=440 mm
Of bottom steel: in x-direction	dx=462.5 mm
in y-direction	dy=dx-(diax+diay)/2=440 mm

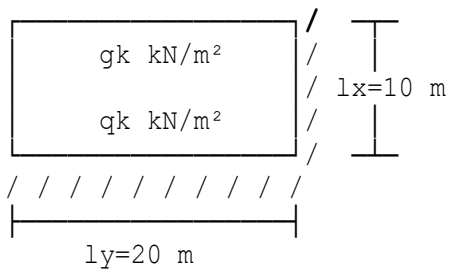

Two adjacent edges discontinuous

Coefficients from Table 3.14

```
Chosen pitch for tension steel    pitchC=400 mm
Chosen pitch for tension steel    pitchC=260 mm
Chosen pitch for tension steel    pitchC=400 mm
Chosen pitch for tension steel    pitchC=260 mm
Mod.factor for tension steel:
From equation 7 (Table 3.10)      modf1=0.55+(477-fs)/(120*(0.9
                                        +M'bd2))=2.6631
but this cannot exceed 2, so      modf1=2
Mod.factor for no comp.steel      modf2=1
Thus maximum permissible
  span/effective-depth ratio      ps'd=bs'd*modf1*modf2=46
Actual span/effective-depth ratio as'd=1000*span/dx=21.622
This does not exceed permiss.ratio of 46,  and is thus acceptable.
```

SUMMARY OF REINFORCEMENT REQUIRED (fy=250 N/mm²)

At edges in x-direction:

Characteristic strength	**250 N/mm²**
Area of steel required Asxe	**18000 mm²**
Area of steel provided Aspxe	**18653 mm²**
Percentage of steel provided	**0.24871 %**
Size of bars	**25 mm**
Number of bars provided	**38**
Spacing of bars	**400 mm centres**
Minimum bond length required	**810 mm**
Effective depth adopted	**462.5 mm**
Weight of steel provided	**146.43 kg/m run**

Area calculated is the minimum requirement given in Table 3.25

At midspan in x-direction:

Characteristic strength	**250 N/mm²**
Area of steel required Asxm	**18000 mm²**
Area of steel provided Aspxm	**18653 mm²**
Percentage of steel provided	**0.24871 %**
Size of bars	**25 mm**
Number of bars provided	**38**
Spacing of bars	**400 mm centres**
Minimum bond length required	**610 mm**
Effective depth adopted	**462.5 mm**
Weight of steel provided	**146.43 kg/m run**

Area calculated is the minimum requirement given in Table 3.25

At edges in y-direction:

Characteristic strength	**250 N/mm²**
Area of steel required Asye	**9000 mm²**
Area of steel provided Aspye	**9110.6 mm²**
Percentage of steel provided	**0.24295 %**
Size of bars	**20 mm**
Number of bars provided	**29**
Spacing of bars	**260 mm centres**
Minimum bond length required	**445 mm**
Effective depth adopted	**440 mm**
Weight of steel provided	**71.518 kg/m run**

Area calculated is the minimum requirement given in Table 3.25

At midspan in y-direction:

Characteristic strength	**250 N/mm²**
Area of steel required Asym	**9000 mm²**
Area of steel provided Aspym	**9110.6 mm²**
Percentage of steel provided	**0.24295 %**
Size of bars	**20 mm**
Number of bars provided	**29**
Spacing of bars	**260 mm centres**
Minimum bond length required	**445 mm**
Effective depth adopted	**440 mm**
Weight of steel provided	**71.518 kg/m run**

Area calculated is the minimum requirement given in Table 3.25

Use minimum steel as detailed above for edge strips.

See Rules 5 and 6 in Cl.3.5.3.5 for details of torsion r'ment.

Location: Thin heavily-loaded square slab, one freely supported edge

Design of two-way slabs rectangular slabs supporting uniform loads

Design to BS8110(1997) with partial safety factor for steel gammaS=1.15

Calculation of design moments in accordance with Clauses 3.5.3 of BS8110 throughout.

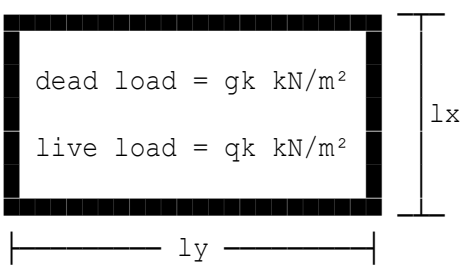

Length of shorter side	lx=5 m
Length of longer side	ly=5 m
Characteristic dead load	gk=4 kN/m²
Characteristic imposed load	qk=5 kN/m²
Overall depth of slab	h=150 mm
Characteristic concrete strength	fcu=60 N/mm²
Characteristic strength of steel	fy=500 N/mm²
Bond type (0,1 or 2)	Type=2
Size of upper bars in x-direction	diaux=16 mm
Size of lower bars in x-direction	diax=16 mm
Size of upper bars in y-direction	diauy=16 mm
Size of lower bars in y-direction	diay=16 mm
Designated exposure class is XC4	
Specified fixing tolerance	tol=10 mm
Designated exposure class is XC4	
Specified fixing tolerance	tol=10 mm
Nominal cover at top of slab	tcover=30 mm
Nominal cover at bottom of slab	bcover=30 mm
Effective depths:	
Of top steel: in y-direction	duy=112 mm
in x-direction	dux=duy-(diaux+diauy)/2=96 mm
Of bottom steel: in y-direction	dy=112 mm
in x-direction	dx=dy-(diax+diay)/2=96 mm

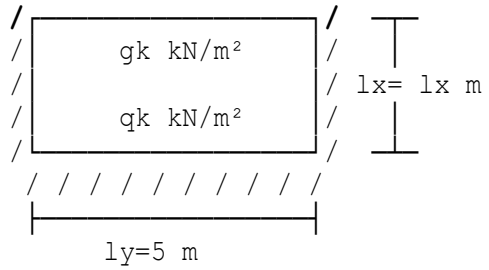

One long edge discontinuous

Coefficients from Table 3.14

```
Chosen pitch for tension steel    pitchC=350 mm
Chosen pitch for tension steel    pitchC=300 mm
Chosen pitch for tension steel    pitchC=350 mm
Chosen pitch for tension steel    pitchC=300 mm

Mod.factor for tension steel:
From equation 7 (Table 3.10)      modf1=0.55+(477-fs)/(120*(0.9
                                        +M'bd2))=2.0199
but this cannot exceed 2, so      modf1=2
Mod.factor for no comp.steel      modf2=1
Thus maximum permissible
  span/effective-depth ratio      ps'd=bs'd*modf1*modf2=46
Actual span/effective-depth ratio as'd=1000*span/dx=52.083
This exceeds permissible ratio of 46,  and is thus not acceptable.
```

SUMMARY OF REINFORCEMENT REQUIRED (fy=500 N/mm²)

At edges in x-direction:

Characteristic strength	**500 N/mm²**
Area of steel required Asxe	**1254 mm²**
Area of steel provided Aspxe	**2613.8 mm²**
Percentage of steel provided	**0.46468 %**
Size of bars	**16 mm**
Number of bars provided	**13**
Spacing of bars	**300 mm centres**
Minimum bond length required	**220 mm**
Effective depth adopted	**96 mm**
Weight of steel provided	**20.518 kg/m run**

At midspan in x-direction:

Characteristic strength	**500 N/mm²**
Area of steel required Asxm	**964.64 mm²**
Area of steel provided Aspxm	**2613.8 mm²**
Percentage of steel provided	**0.46468 %**
Size of bars	**16 mm**
Number of bars provided	**13**
Spacing of bars	**300 mm centres**
Minimum bond length required	**195 mm**
Effective depth adopted	**96 mm**
Weight of steel provided	**20.518 kg/m run**

At edges in y-direction:

Characteristic strength	**500 N/mm²**
Area of steel required Asye	**1019.8 mm²**
Area of steel provided Aspye	**2211.7 mm²**
Percentage of steel provided	**0.39319 %**
Size of bars	**16 mm**
Number of bars provided	**11**
Spacing of bars	**350 mm centres**
Minimum bond length required	**210 mm**
Effective depth adopted	**112 mm**
Weight of steel provided	**17.362 kg/m run**

At midspan in y-direction:

Characteristic strength	**500 N/mm²**
Area of steel required Asym	**771.71 mm²**
Area of steel provided Aspym	**2211.7 mm²**
Percentage of steel provided	**0.39319 %**
Size of bars	**16 mm**
Number of bars provided	**11**
Spacing of bars	**350 mm centres**
Minimum bond length required	**195 mm**
Effective depth adopted	**112 mm**
Weight of steel provided	**17.362 kg/m run**

Minimum tension reinforcement in edge strips

Min.tension area (Table 3.25)	Asmin=permin/100*1000*h
	=195 mm² per metre
Diameter of distribution bars	diamin=12 mm
Maximum pitch (c.to c.of bars)	pchm=3*dux+diamin=300 mm,
As this is less than 750 mm, this	is satisfactory.
Chosen pitch for tension steel	pitchC=300 mm

Minimum reinforcement in edge strips:

Characteristic strength	**500 N/mm²**
Minimum area required Asmin	**195 mm² per m**
Steel area provided Asmpro	**376 mm² per m**
Percentage of steel provided	**0.25067 %**
Size of bars	**12 mm**
Spacing of bars	**300 mm centres**
Minimum lap length required	**300 mm**
Weight of steel provided	**2.9516 kg/m²**

See Rule 6 in Clause 3.5.3.5 for details of torsion reinforcement.

Location: Ex1 - Typical two-way slab with all edges fixed

Design of two-way slabs rectangular slabs supporting uniform loads

The calculations are in accordance with EC2 Part 1-1 and the IStructE "Manual for the design of concrete building structures to EC2".
Partial safety factor for steel gams=1.15
Partial safety factor for conc. gamc=1.5
Partial safety factor for bond gamb=1.5

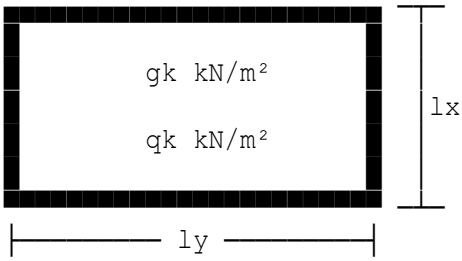

gk = permanent load
qk = variable load

Length of shorter side lx=6 m
Length of longer side ly=8 m
Characteristic permanent load gk=4 kN/m²
Characteristic variable load qk=5 kN/m²
Permanent load factor gamG=1.35
Variable load factor gamQ=1.5
Overall depth of slab h=200 mm
Size of upper bars in x-direction diaux=20 mm
Size of lower bars in x-direction diax=20 mm
Size of upper bars in y-direction diauy=16 mm
Size of lower bars in y-direction diay=16 mm
Nominal cover at top of slab tcover=35 mm
Nominal cover at bottom of slab bcover=35 mm
Effective depths:
Of top steel: in x-direction dux=155 mm
in y-direction duy=dux-(diaux+diauy)/2=137 mm
Of bottom steel: in x-direction dx=155 mm
in y-direction dy=dx-(diax+diay)/2=137 mm

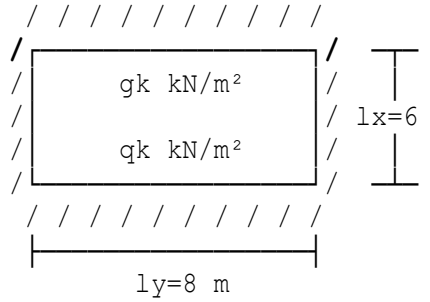

All four edges continuous

Coefficients from the ISE Manual to EC2, Table 5.3.

Chosen spacing of tension bars pchxe=400 mm
Chosen spacing of tension bars pchye=400 mm
Chosen spacing of tension bars pchxm=400 mm
Chosen spacing of tension bars pchym=400 mm

Check on span/effective-depth ratio (in lx direction)

Actual span to depth ratio l'd=L*1000/d=43.8
Allowable span/depth ratio l'da=k*N*F1*F2*F3=145.6
Absolute value of span/depth l'da=40*k=60

DESIGN	**Actual l/d ratio**	**43.8**
SUMMARY	**Basic l/d ratio**	**64.7**
DEFLECTION	**Span factor**	**1.5**
	Flange beam factor F1	**1**
	Long spans factor F2	**1**
	Steel stress factor F3	**1.5**
	Allowable l/d ratio	**60**

NOTE: Care should be taken with the EC2 values as the deflection equations used give unrealistically high values. National Annex to EC2 Part 1:2004, Table NA.5 gives span/effective depth ratios for lightly stressed concrete (C30/37 & ρ=0.5%) as follows:

Simply supported spans	**20**
End spans	**26**
Interior spans	**30**

SUMMARY OF REINFORCEMENT REQUIRED (fy=500 N/mm²)

At edges in x-direction:

Characteristic strength	**500 N/mm²**
Area of steel required Asxe	**2060 mm²**
Area of steel provided Aspxe	**5027 mm²**
Percentage of steel provided	**0.4189 %**
Size of bars	**20 mm**
Number of bars provided	**16**
Spacing of bars	**400 mm centres**
Minimum bond length required	**330 mm**
Effective depth adopted	**155 mm**

At midspan in x-direction:

Characteristic strength	**500 N/mm²**
Area of steel required Asxm	**1552 mm²**
Area of steel provided Aspxm	**5027 mm²**
Percentage of steel provided	**0.4189 %**
Size of bars	**20 mm**
Number of bars provided	**16**
Spacing of bars	**400 mm centres**
Minimum bond length required	**249 mm**
Effective depth adopted	**155 mm**

At edges in y-direction:

Characteristic strength	**500 N/mm²**
Area of steel required Asye	**1182 mm²**
Area of steel provided Aspye	**2413 mm²**
Percentage of steel provided	**0.2681 %**
Size of bars	**16 mm**
Number of bars provided	**12**
Spacing of bars	**400 mm centres**
Minimum bond length required	**316 mm**
Effective depth adopted	**137 mm**

At midspan in y-direction:

Characteristic strength	**500 N/mm²**
Area of steel required Asym	**886.3 mm²**
Area of steel provided Aspym	**2413 mm²**
Percentage of steel provided	**0.2681 %**
Size of bars	**16 mm**
Number of bars provided	**12**
Spacing of bars	**400 mm centres**
Minimum bond length required	**237 mm**
Effective depth adopted	**137 mm**

Minimum tension reinforcement in edge strips

Diameter of distribution bars	diamin=12 mm
Chosen spacing of tension bars	pchmin=400 mm

Minimum reinforcement in edge strips:

Characteristic strength	500 N/mm²
Minimum area required Asmin	206 mm² per m
Steel area provided Asmpro	282 mm² per m
Size of bars	12 mm
Spacing of bars	400 mm centres

Shear check

Case 1

Area of steel required	As=2060 mm²
Area of tension steel provided	Aspr=5027 mm²
Effective depth of section	d=155 mm
Location for shear calculation:	Shear on long side of slab
Shear force due to ultimate load	VEd=235 kN
Effective breadth for shear	bw=6000 mm
Term for shear resistance	vRdc=(rho1*fck)^(1/3)=2.382
Shear resistance	VRdc=CRdc*ks*vRdc*bw*d/1000=531.6 kN
Minimum stress	vmin=0.035*ks^1.5*fck^0.5=0.495 N/mm²
Minimum shear resistance	VRdm=vmin*bw*d/1000=460.3 kN

SHEAR SUMMARY	**Design shear force**	**235 kN**
	Design shear resistance	**531.6 kN**

Crack control check

Measures to control cracking are not necessary where the overall depth does not exceed 200 mm as per Clause 7.3.3(1).

Location: Ex2 - Large thick two-way slab reinforced with mild steel

Design of two-way slabs rectangular slabs supporting uniform loads

The calculations are in accordance with EC2 Part 1-1 and the IStructE "Manual for the design of concrete building structures to EC2".
Partial safety factor for steel gams=1.15
Partial safety factor for conc. gamc=1.5
Partial safety factor for bond gamb=1.5

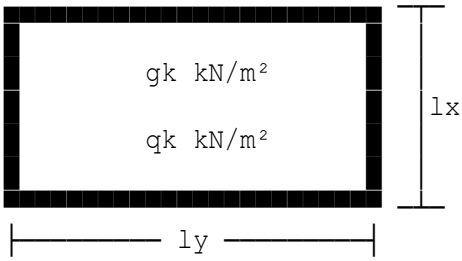

gk = permanent load
qk = variable load

Length of shorter side lx=10 m
Length of longer side ly=20 m
Characteristic permanent load gk=3 kN/m²
Characteristic variable load qk=4 kN/m²
Permanent load factor gamG=1.35
Variable load factor gamQ=1.5
Overall depth of slab h=500 mm
Size of upper bars in x-direction diaux=25 mm
Size of lower bars in x-direction diax=25 mm
Size of upper bars in y-direction diauy=20 mm
Size of lower bars in y-direction diay=20 mm
Nominal cover at top of slab tcover=30 mm
Nominal cover at bottom of slab bcover=30 mm
Effective depths:
Of top steel: in x-direction dux=457.5 mm
in y-direction duy=dux-(diaux+diauy)/2=435 mm
Of bottom steel: in x-direction dx=462.5 mm

Location: Ex3 - Heavily-loaded slab with one freely supported edge

Design of two-way slabs rectangular slabs supporting uniform loads

The calculations are in accordance with EC2 Part 1-1 and the IStructE "Manual for the design of concrete building structures to EC2".
Partial safety factor for steel gams=1.15
Partial safety factor for conc. gamc=1.5
Partial safety factor for bond gamb=1.5

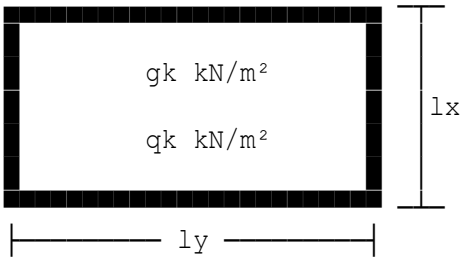

gk = permanent load
qk = variable load

Length of shorter side lx=5 m
Length of longer side ly=5 m
Characteristic permanent load gk=4 kN/m²
Characteristic variable load qk=5 kN/m²
Permanent load factor gamG=1.35
Variable load factor gamQ=1.5
Overall depth of slab h=175 mm
Size of upper bars in x-direction diaux=16 mm
Size of lower bars in x-direction diax=16 mm
Size of upper bars in y-direction diauy=16 mm
Size of lower bars in y-direction diay=16 mm
Nominal cover at top of slab tcover=35 mm
Nominal cover at bottom of slab bcover=35 mm
Effective depths:
Of top steel: in y-direction duy=132 mm
in x-direction dux=duy-(diaux+diauy)/2=116 mm
Of bottom steel: in y-direction dy=132 mm
in x-direction dx=dy-(diax+diay)/2=116 mm

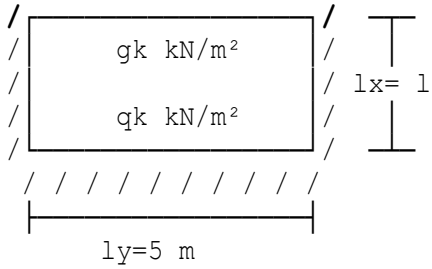

One long edge discontinuous

Coefficients from the ISE Manual to EC2, Table 5.3.

Chosen spacing of tension bars pchye=400 mm
Chosen spacing of tension bars pchxe=400 mm
Chosen spacing of tension bars pchym=400 mm
Chosen spacing of tension bars pchxm=400 mm

Check on span/effective-depth ratio (in lx direction)

Actual span to depth ratio l'd=L*1000/d=43.1
Allowable span/depth ratio l'da=k*N*F1*F2*F3=248.4
Absolute value of span/depth l'da=40*k=52

DESIGN	**Actual l/d ratio**	**43.1**
SUMMARY	**Basic l/d ratio**	**127.4**
DEFLECTION	**Span factor**	**1.3**
	Flange beam factor F1	**1**
	Long spans factor F2	**1**
	Steel stress factor F3	**1.5**
	Allowable l/d ratio	**52**

NOTE: Care should be taken with the EC2 values as the deflection equations used give unrealistically high values. National Annex to EC2 Part 1:2004, Table NA.5 gives span/effective depth ratios for lightly stressed concrete (C30/37 & ρ=0.5%) as follows:

Simply supported spans	**20**
End spans	**26**
Interior spans	**30**

SUMMARY OF REINFORCEMENT REQUIRED (fy=500 N/mm²)

At edges in x-direction:

Characteristic strength	**500 N/mm²**
Area of steel required Asxe	**984.4 mm²**
Area of steel provided Aspxe	**2011 mm²**
Percentage of steel provided	**0.3064 %**
Size of bars	**16 mm**
Number of bars provided	**10**
Spacing of bars	**400 mm centres**
Minimum bond length required	**199 mm**
Effective depth adopted	**116 mm**

At midspan in x-direction:

Characteristic strength	**500 N/mm²**
Area of steel required Asxm	**921 mm²**
Area of steel provided Aspxm	**2011 mm²**
Percentage of steel provided	**0.3064 %**
Size of bars	**16 mm**
Number of bars provided	**10**
Spacing of bars	**400 mm centres**
Minimum bond length required	**186 mm**
Effective depth adopted	**116 mm**

At edges in y-direction:

Characteristic strength	**500 N/mm²**
Area of steel required Asye	**1048 mm²**
Area of steel provided Aspye	**2011 mm²**
Percentage of steel provided	**0.3064 %**
Size of bars	**16 mm**
Number of bars provided	**10**
Spacing of bars	**400 mm centres**
Minimum bond length required	**212 mm**
Effective depth adopted	**132 mm**

At midspan in y-direction:

Characteristic strength	**500 N/mm²**
Area of steel required Asym	**1048 mm²**
Area of steel provided Aspym	**2011 mm²**
Percentage of steel provided	**0.3064 %**
Size of bars	**16 mm**
Number of bars provided	**10**
Spacing of bars	**400 mm centres**
Minimum bond length required	**212 mm**
Effective depth adopted	**132 mm**

Minimum tension reinforcement in edge strips

Diameter of distribution bars	diamin=12 mm
Chosen spacing of tension bars	pchmin=400 mm

Minimum reinforcement in edge strips:

Characteristic strength	500 N/mm²
Minimum area required Asmin	279 mm² per m
Steel area provided Asmpro	282 mm² per m
Size of bars	12 mm
Spacing of bars	400 mm centres

Location: Ex4 - Two-way slab reinforced with accurate F3 evaluation

Design of two-way slabs rectangular slabs supporting uniform loads

The calculations are in accordance with EC2 Part 1-1 and the IStructE "Manual for the design of concrete building structures to EC2".
Partial safety factor for steel gams=1.15
Partial safety factor for conc. gamc=1.5
Partial safety factor for bond gamb=1.5

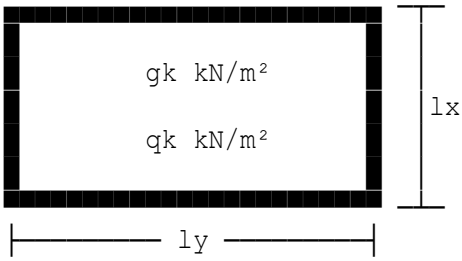

gk = permanent load
qk = variable load

Length of shorter side lx=10 m
Length of longer side ly=20 m
Characteristic permanent load gk=3 kN/m²
Characteristic variable load qk=4 kN/m²
Permanent load factor gamG=1.35
Variable load factor gamQ=1.5
Overall depth of slab h=500 mm
Size of upper bars in x-direction diaux=25 mm
Size of lower bars in x-direction diax=25 mm
Size of upper bars in y-direction diauy=20 mm
Size of lower bars in y-direction diay=20 mm
Nominal cover at top of slab tcover=30 mm
Nominal cover at bottom of slab bcover=30 mm
Effective depths:
Of top steel: in x-direction dux=457.5 mm
in y-direction duy=dux-(diaux+diauy)/2=435 mm
Of bottom steel: in x-direction dx=462.5 mm

Location: Ex5 - Typical two-way slab with all edges discontinuous

Design of two-way slabs rectangular slabs supporting uniform loads

The calculations are in accordance with EC2 Part 1-1 and the IStructE "Manual for the design of concrete building structures to EC2".
Partial safety factor for steel gams=1.15
Partial safety factor for conc. gamc=1.5
Partial safety factor for bond gamb=1.5

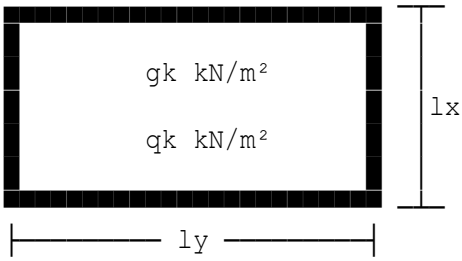

gk = permanent load
qk = variable load

Length of shorter side lx=1.7 m
Length of longer side ly=1.7 m
Characteristic permanent load gk=112 kN/m²
Characteristic variable load qk=0 kN/m²
Permanent load factor gamG=1.35
Variable load factor gamQ=1.5
Overall depth of slab h=400 mm
Size of upper bars in x-direction diaux=16 mm
Size of lower bars in x-direction diax=16 mm
Size of upper bars in y-direction diauy=16 mm
Size of lower bars in y-direction diay=16 mm
Nominal cover at top of slab tcover=20 mm
Nominal cover at bottom of slab bcover=20 mm
Effective depths:
Of top steel: in x-direction dux=372 mm
in y-direction duy=dux-(diaux+diauy)/2=356 mm
Of bottom steel: in x-direction dx=322 mm
in y-direction dy=dx-(diax+diay)/2=306 mm

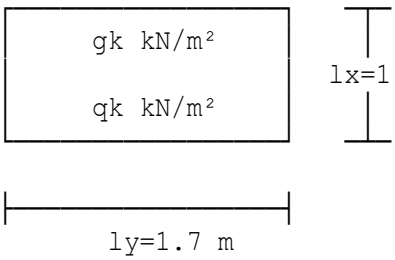

All four edges discontinuous

Coefficients from the ISE Manual to EC2, Table 5.3.

Chosen spacing of tension bars pchxm=340 mm
Chosen spacing of tension bars pchym=360 mm

SUMMARY OF REINFORCEMENT REQUIRED (fy=500 N/mm²)

At midspan in x-direction:

Characteristic strength	**500 N/mm²**
Area of steel required Asxm	**749.1 mm²**
Area of steel provided Aspxm	**804.2 mm²**
Percentage of steel provided	**0.1577 %**
Size of bars	**16 mm**
Number of bars provided	**4**
Spacing of bars	**340 mm centres**
Minimum bond length required	**439 mm**
Effective depth adopted	**322 mm**

At midspan in y-direction:

Characteristic strength	**500 N/mm²**
Area of steel required Asym	**711.9 mm²**
Area of steel provided Aspym	**804.2 mm²**
Percentage of steel provided	**0.1577 %**
Size of bars	**16 mm**
Number of bars provided	**4**
Spacing of bars	**360 mm centres**
Minimum bond length required	**417 mm**
Effective depth adopted	**306 mm**

Minimum tension reinforcement in edge strips

Diameter of distribution bars diamin=16 mm
Chosen spacing of tension bars pchmin=280 mm

Minimum reinforcement in edge strips:

Characteristic strength	500 N/mm²
Minimum area required Asmin	678 mm² per m
Steel area provided Asmpro	718 mm² per m
Size of bars	16 mm
Spacing of bars	280 mm centres

Shear check

Case 1

Area of steel required	As=675 mm²
Area of tension steel provided	Aspr=1810 mm²
Effective depth of section	d=372 mm
Location for shear calculation:	
Shear force due to ultimate load	VEd=65 kN
Effective breadth for shear	bw=1000 mm
Term for shear resistance	vRdc=(rho1*fck)^(1/3)=2.135
Shear resistance	VRdc=CRdc*ks*vRdc*bw*d/1000=165.2 kN
Minimum stress	vmin=0.035*ks^1.5*fck^0.5=0.5051 N/mm²
Minimum shear resistance	VRdm=vmin*bw*d/1000=187.9 kN
Modified shear resistance	VRdc=VRdm=187.9 kN

SHEAR SUMMARY	**Design shear force**	**65 kN**
	Design shear resistance	**187.9 kN**

Location: Large square internal panel

Bending moments to BS8110 (AMD7583) for flat slabs without drop panels

Calculations for simplified method described in Clauses 3.7.2 of Code.

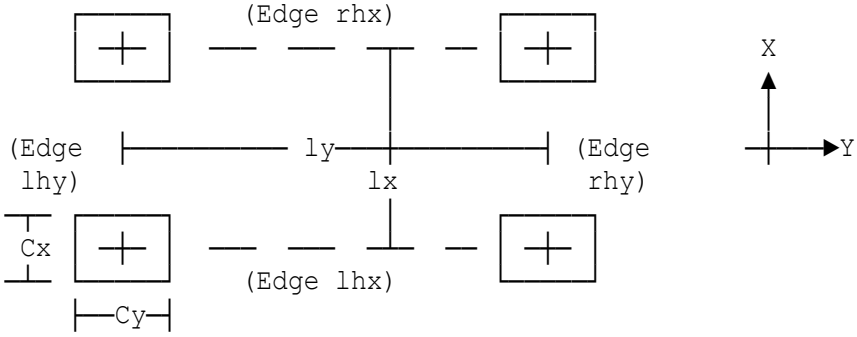

Shorter span of slab panel lx=20 m
Longer span of slab panel ly=20 m
Plan dim.of columns in x-dir. Cx=400 mm
Plan dim.of columns in y-dir. Cy=400 mm
Eff.slab depth for moment transfer to columns d=350 mm
Characteristic dead load gk=4 kN/m²
Characteristic imposed load qk=2 kN/m²
Characteristic concrete strength fcu=35 N/mm²

Support conditions:

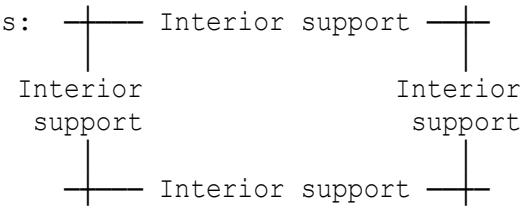

Summary of design moments (moments in kNm/metre width)

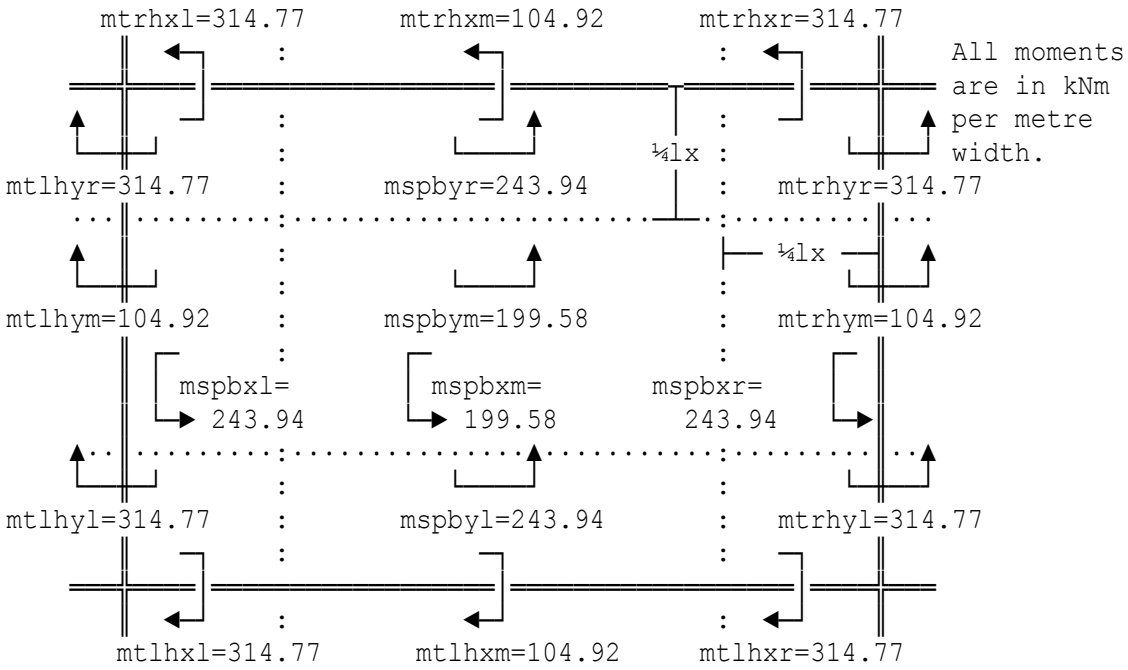

Location: Long rectangular panel along free edge of slab system

Bending moments to BS8110 (AMD7583) for flat slabs without drop panels

Calculations for simplified method described in Clauses 3.7.2 of Code.

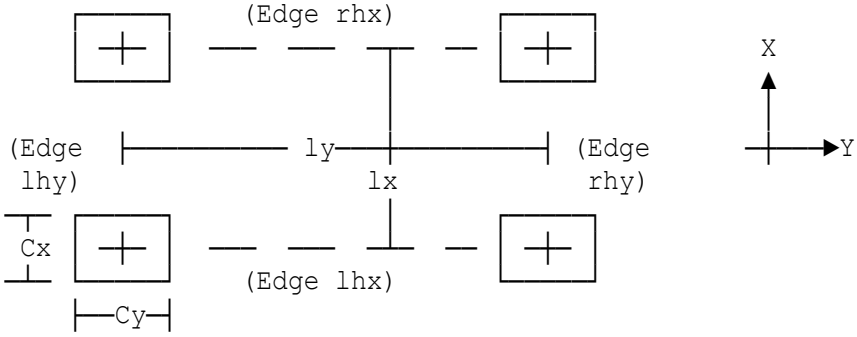

Shorter span of slab panel lx=10 m
Longer span of slab panel ly=12 m
Plan dim.of columns in x-dir. Cx=250 mm
Plan dim.of columns in y-dir. Cy=300 mm
Eff.slab depth for moment transfer to columns d=200 mm
Characteristic dead load gk=3.2 kN/m²
Characteristic imposed load qk=2.5 kN/m²
Characteristic concrete strength fcu=30 N/mm²

Support conditions:

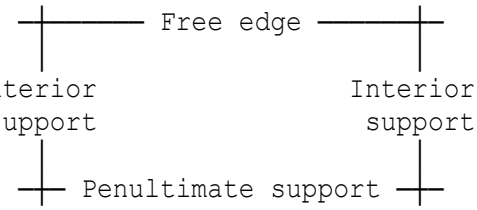

Summary of design moments (moments in kNm/metre width)

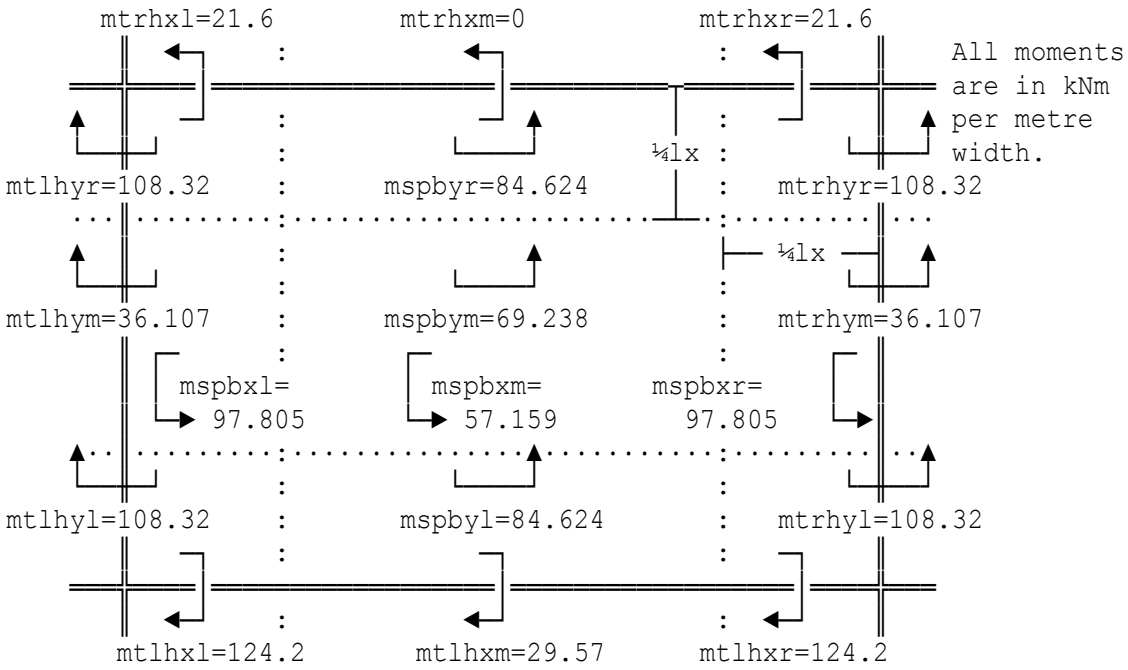

Location: Rectangular penultimate panel

Bending moments to BS8110 (AMD7583) for flat slabs without drop panels

Calculations for simplified method described in Clauses 3.7.2 of Code.

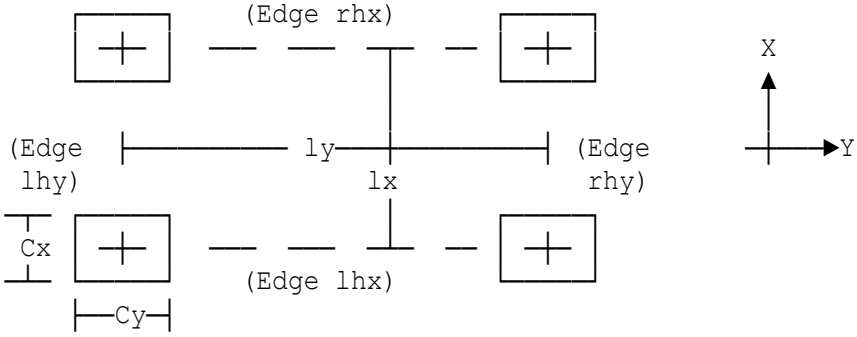

Shorter span of slab panel lx=11 m
Longer span of slab panel ly=12 m
Plan dim.of columns in x-dir. Cx=200 mm
Plan dim.of columns in y-dir. Cy=250 mm
Eff.slab depth for moment transfer to columns d=250 mm
Characteristic dead load gk=2 kN/m²
Characteristic imposed load qk=2 kN/m²
Characteristic concrete strength fcu=30 N/mm²

Support conditions:

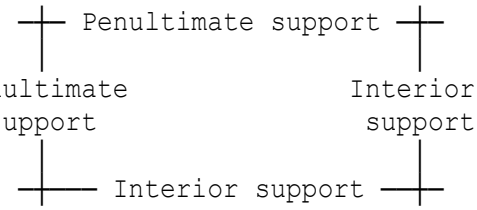

Summary of design moments (moments in kNm/metre width)

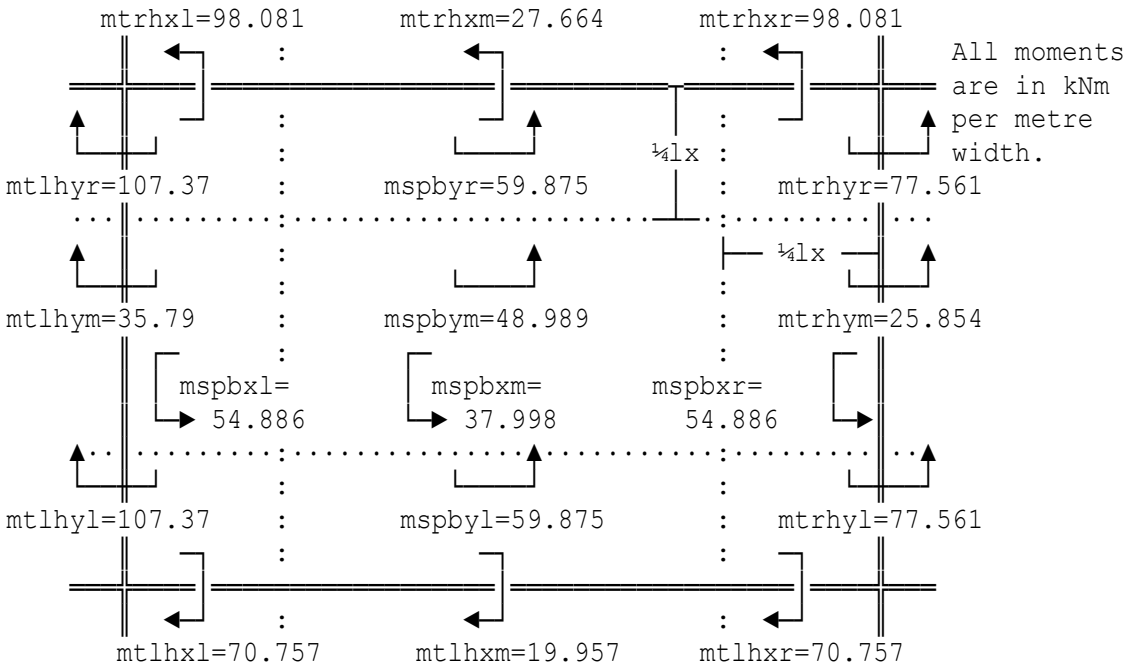

Location: Large square internal panel

Bending moments to EC2 for flat slabs without drop panels

This simplified method assumes that the flat slab has at least three spans or bays in each direction and the ratio of the longest span to the shortest does not exit 1.2. The max values of the bending moment and shear forces in each direction will be obtained from Table 5.4 in the IStructE Manual for the design of concrete building structures to Eurocode 2. This assumes 20% redistribution of bending moments.

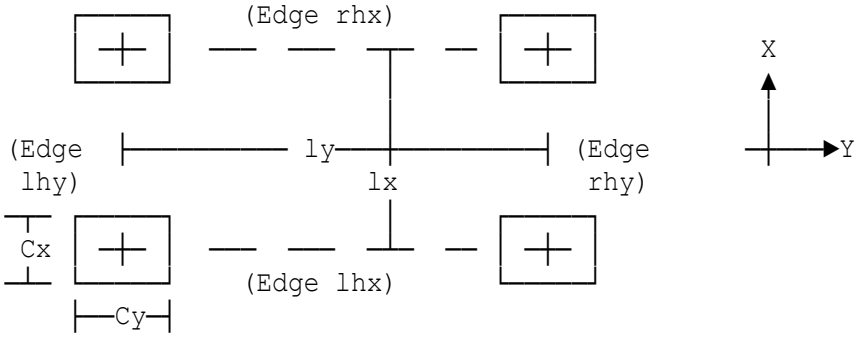

Shorter span of slab panel	lx=20 m
Longer span of slab panel	ly=20 m
Plan dim.of columns in x-dir.	Cx=400 mm
Plan dim.of columns in y-dir.	Cy=400 mm
moment transfer to columns	d=350 mm
Characteristic permanent load	gk=4 kN/m²
Characteristic variable load	qk=2 kN/m²

Support conditions:

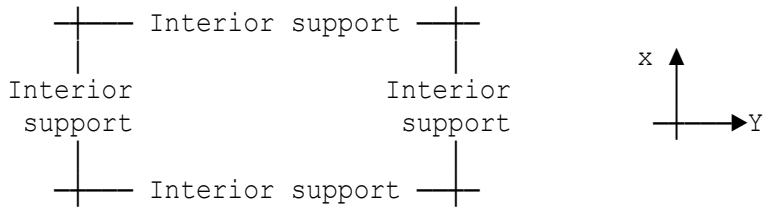

Effective diameter of column	hc=SQR(4*Cx*Cy/PI)=451.35 mm
Design ult load per unit area	n=1.35*gk+1.5*qk=8.4 kN/m²
Total design load on panel	F=n*lx*ly=3360 kN

Summary of design moments (moments in kNm/metre width)

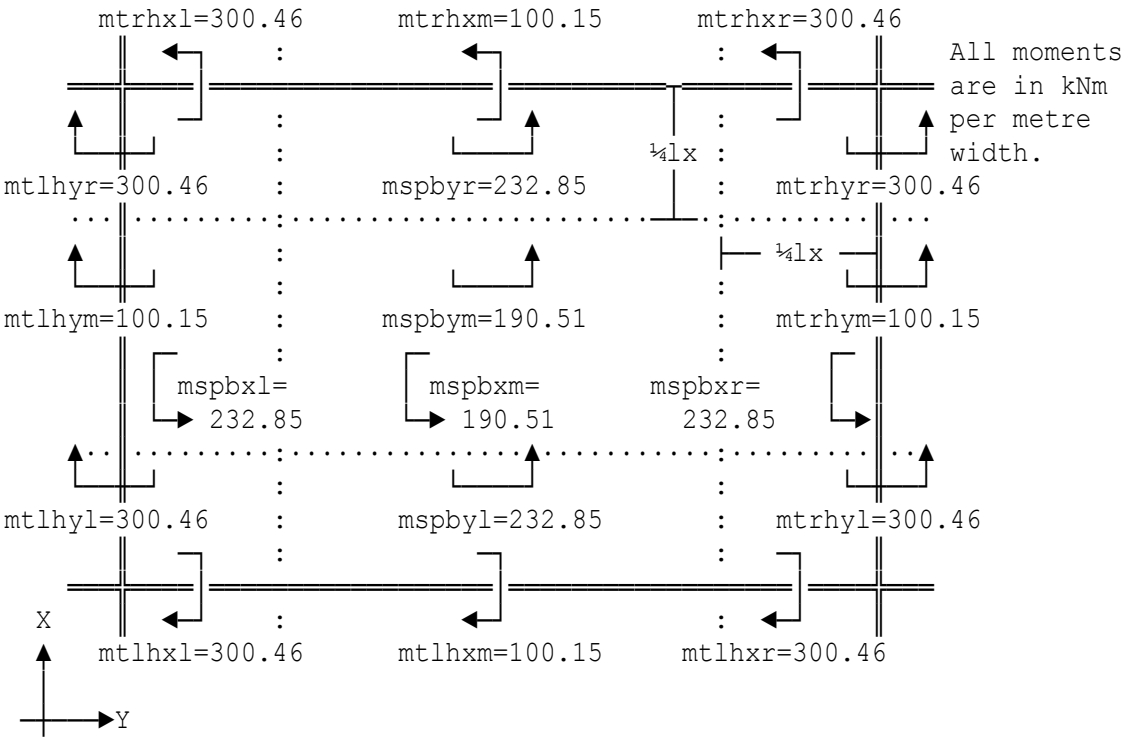

Location: Long rectangular panel along free edge of slab system

Bending moments to EC2 for flat slabs without drop panels

This simplified method assumes that the flat slab has at least three spans or bays in each direction and the ratio of the longest span to the shortest does not exit 1.2. The max values of the bending moment and shear forces in each direction will be obtained from Table 5.4 in the IStructE Manual for the design of concrete building structures to Eurocode 2. This assumes 20% redistribution of bending moments.

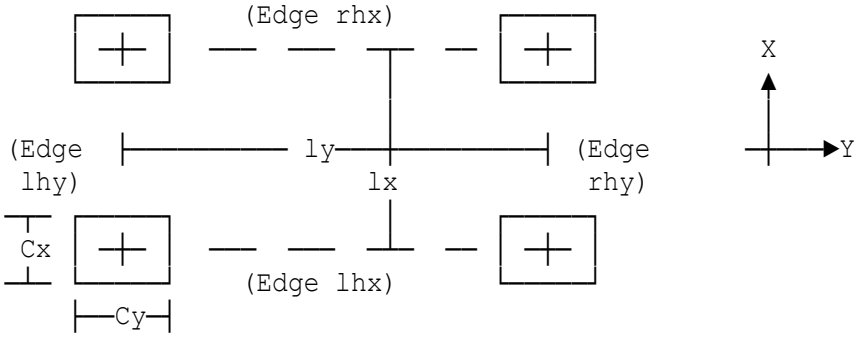

Shorter span of slab panel	lx=10 m
Longer span of slab panel	ly=12 m
Plan dim.of columns in x-dir.	Cx=250 mm
Plan dim.of columns in y-dir.	Cy=300 mm
moment transfer to columns	d=200 mm
Characteristic permanent load	gk=3.2 kN/m²
Characteristic variable load	qk=2.5 kN/m²

Support conditions:

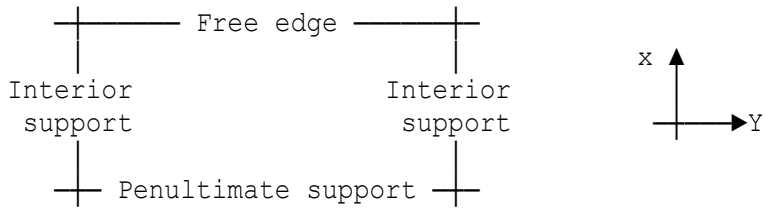

Effective diameter of column	hc=SQR(4*Cx*Cy/PI)=309.02 mm
Design ult load per unit area	n=1.35*gk+1.5*qk=8.07 kN/m²
Total design load on panel	F=n*lx*ly=968.4 kN

Summary of design moments (moments in kNm/metre width)

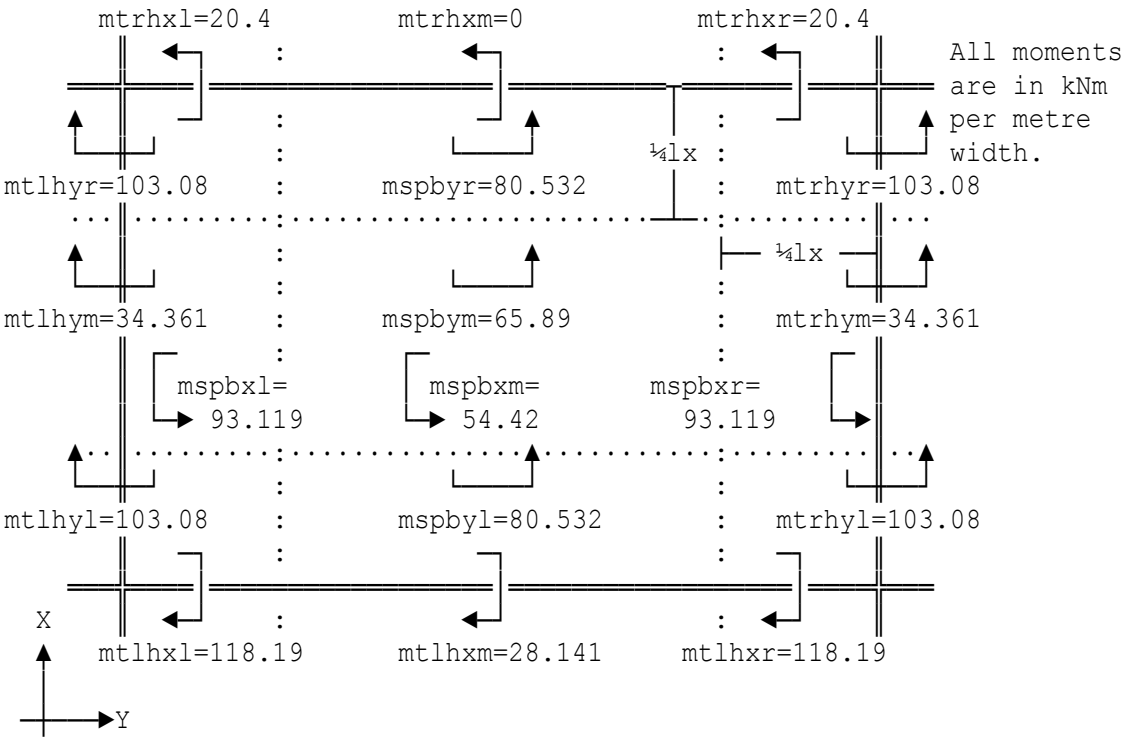

Location: Rectangular penultimate panel

Bending moments to EC2 for flat slabs without drop panels

This simplified method assumes that the flat slab has at least three spans or bays in each direction and the ratio of the longest span to the shortest does not exit 1.2. The max values of the bending moment and shear forces in each direction will be obtained from Table 5.4 in the IStructE Manual for the design of concrete building structures to Eurocode 2. This assumes 20% redistribution of bending moments.

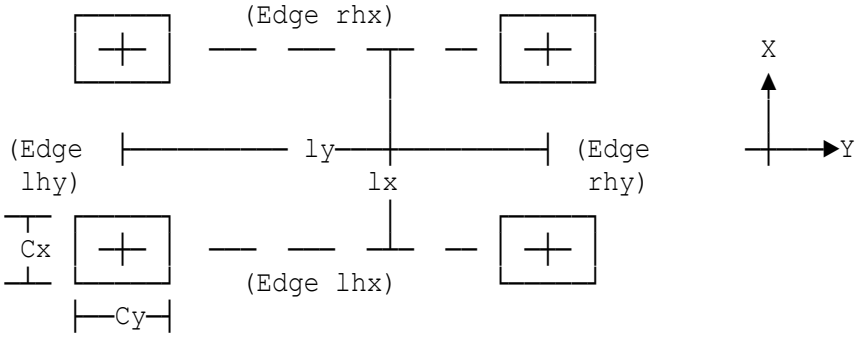

Shorter span of slab panel	lx=11 m
Longer span of slab panel	ly=12 m
Plan dim.of columns in x-dir.	Cx=200 mm
Plan dim.of columns in y-dir.	Cy=250 mm
moment transfer to columns	d=250 mm
Characteristic permanent load	gk=2 kN/m²
Characteristic variable load	qk=2 kN/m²

Support conditions:

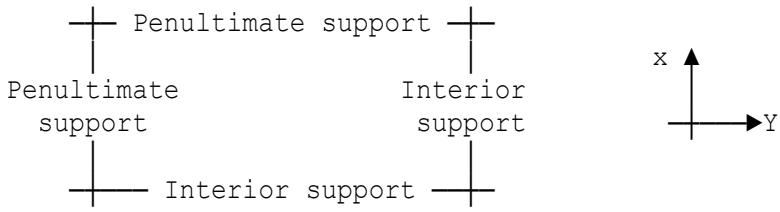

Effective diameter of column	hc=SQR(4*Cx*Cy/PI)=252.31 mm
Design ult load per unit area	n=1.35*gk+1.5*qk=5.7 kN/m²
Total design load on panel	F=n*lx*ly=752.4 kN

Summary of design moments (moments in kNm/metre width)

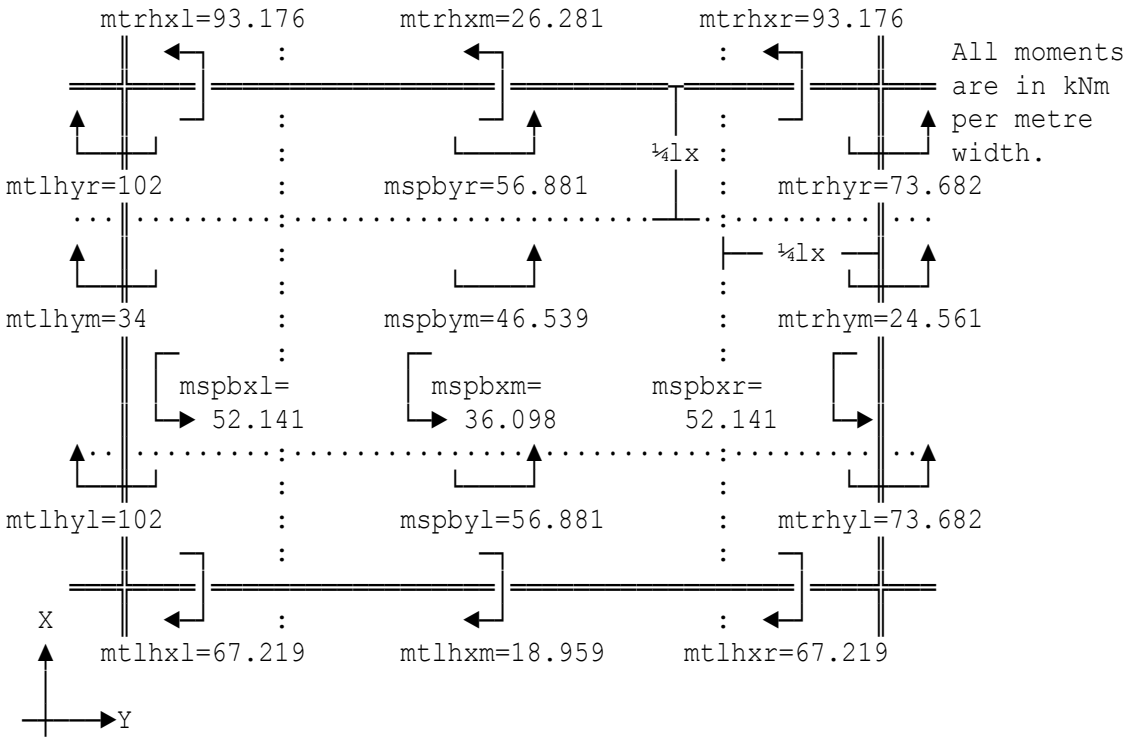

Location: High shear force on small area of moderately-thick slab

Punching shear round concentrated load in accordance with BS8110

Calculations are in accordance with Clauses 3.7.7 of Part 1 of BS8110.
First steel perimeter located at d/2 from load face (see Cl.3.7.7.6).
Design to BS8110:1997, partial safety factor for steel gams=1.15.

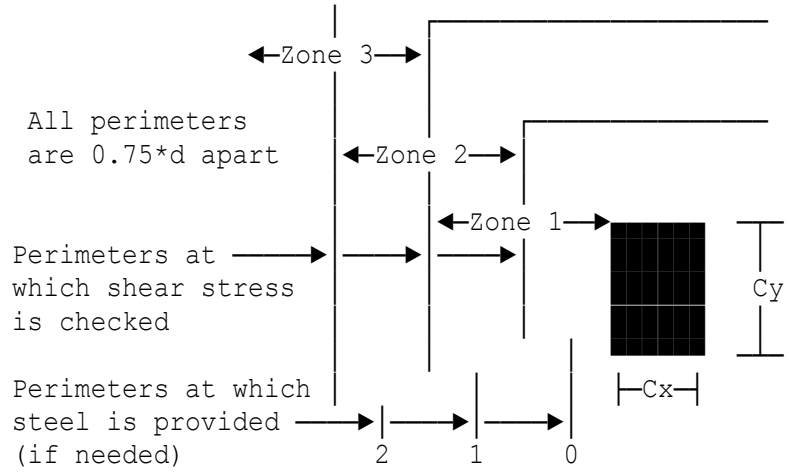

Note:
As the first plane that must be considered is at 1.5*d from face of concentrated load (see Figure 3.17 in Code), no enhancement of vc (Clause 3.7.7.4) is applicable.

Average flexural steel percentage p=1.2 %
Characteristic concrete strength fcu=40 N/mm²
Design ult.load per unit area n=10 kN/m²
Char. strength of shear reinf. fyv=500 N/mm²
Initial dia. for shear reinf. dial=12 mm
According to Clause 3.4.5.8 of BS8110, absolute maximum shear stress must not exceed 5 N/mm² and thus vlim=5 N/mm².
Maximum design shear stress vmax=1000*Veff/(uo*d)=4.9342 N/mm²

Calculations for Zone 1 i.e. for Steel Perimeters 0 and 1

Distance from load face to shear perimeter being checked lp=480 mm
Number of legs to be provided along inner steel perimeter 0 ni=23

Location of Steel Perimeter 0 : 160 mm from face of loaded area.
Along Steel Perimeter 0 : provide 12 mm dia legs at 130 mm spacing.
Number of legs on perimeter 0 ni=INT(usi/spi)+1=25

Location of Steel Perimeter 1 : 400 mm from face of loaded area.
Along Steel Perimeter 1 : provide 12 mm dia legs at 150 mm spacing.
Number of legs on perimeter 1 no=INT(uso/sp)+1=35

Calculations for Zone 2 i.e. for Steel Perimeter 2

Distance from load face to
shear perimeter being checked lp=720 mm

Location of Steel Perimeter 2 : 640 mm from face of loaded area.
Along Steel Perimeter 2 : provide 12 mm dia legs at 480 mm spacing.
Number of legs on perimeter 2 no=INT(uso/sp)+1=15

Calculations for Zone 3 i.e. for Steel Perimeter 3

Distance from load face to
shear perimeter being checked lp=960 mm

Location of Steel Perimeter 3 : 880 mm from face of loaded area.
Along Steel Perimeter 3 : provide 12 mm dia legs at 480 mm spacing.
Number of legs on perimeter 3 no=INT(uso/sp)+1=19

Calculations for Zone 4 i.e. for Steel Perimeter 4

Distance from load face to
shear perimeter being checked lp=1200 mm

As v does not exceed vc, no shear reinforcement is required on steel perimeter 4 and thus the calculations are complete.

Total number of 12 mm links required is 94

Note: All shear reinforcement must be anchored round at least one layer of tension steel (Clause 3.7.7.6)

Location: Moderate shear force on thin slab using mild steel

Punching shear round concentrated load in accordance with BS8110

Calculations are in accordance with Clauses 3.7.7 of Part 1 of BS8110.
First steel perimeter located at d/2 from load face (see Cl.3.7.7.6).
Design to BS8110:1997, partial safety factor for steel gams=1.15.

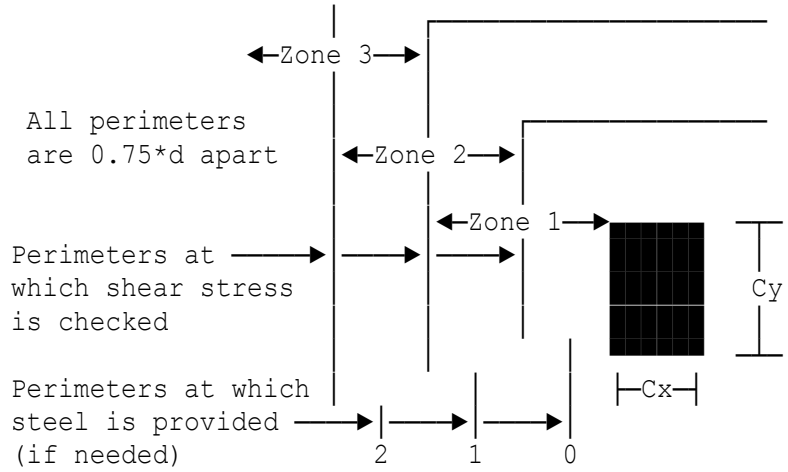

Note:

As the first plane that must be considered is at 1.5*d from face of concentrated load (see Figure 3.17 in Code), no enhancement of vc (Clause 3.7.7.4) is applicable.

Average flexural steel percentage p=0.4 %
Characteristic concrete strength fcu=30 N/mm²
Design ult.load per unit area n=10 kN/m²
Char. strength of shear reinf. fyv=250 N/mm²
Initial dia. for shear reinf. dial=6 mm
According to Clause 3.4.5.8 of BS8110, absolute maximum shear stress
must not exceed 0.8√fcu and thus vlim=0.8*SQR(fcu)=4.3818 N/mm²
Maximum design shear stress vmax=1000*Veff/(uo*d)=2.0833 N/mm²

Calculations for Zone 1 i.e. for Steel Perimeters 0 and 1

Distance from load face to
shear perimeter being checked lp=180 mm
Number of legs to be provided along inner steel perimeter 0 ni=23

Location of Steel Perimeter 0 : 60 mm from face of loaded area.
Along Steel Perimeter 0 : provide 6 mm dia legs at 100 mm spacing.
Number of legs on perimeter 0 ni=INT(usi/spi)+1=25

Location of Steel Perimeter 1 : 150 mm from face of loaded area.
Along Steel Perimeter 1 : provide 6 mm dia legs at 100 mm spacing.
Number of legs on perimeter 1 no=INT(uso/sp)+1=33

Calculations for Zone 2 i.e. for Steel Perimeter 2

Distance from load face to
shear perimeter being checked lp=270 mm

Location of Steel Perimeter 2 : 240 mm from face of loaded area.
Along Steel Perimeter 2 : provide 6 mm dia legs at 180 mm spacing.
Number of legs on perimeter 2 no=INT(uso/sp)+1=22

Calculations for Zone 3 i.e. for Steel Perimeter 3

Distance from load face to
shear perimeter being checked lp=360 mm

Location of Steel Perimeter 3 : 330 mm from face of loaded area.
Along Steel Perimeter 3 : provide 6 mm dia legs at 180 mm spacing.
Number of legs on perimeter 3 no=INT(uso/sp)+1=26

Calculations for Zone 4 i.e. for Steel Perimeter 4

Distance from load face to
shear perimeter being checked lp=450 mm

Location of Steel Perimeter 4 : 420 mm from face of loaded area.
Along Steel Perimeter 4 : provide 6 mm dia legs at 180 mm spacing.
Number of legs on perimeter 4 no=INT(uso/sp)+1=30

Calculations for Zone 5 i.e. for Steel Perimeter 5

Distance from load face to
shear perimeter being checked lp=540 mm

As v does not exceed vc, no shear reinforcement is required on steel perimeter 5 and thus the calculations are complete.

Total number of 6 mm links required is 136

Note: All shear reinforcement must be anchored round at least one layer of tension steel (Clause 3.7.7.6)

Location: High shear force on thick slab using high-yield steel

Punching shear round concentrated load in accordance with BS8110

Calculations are in accordance with Clauses 3.7.7 of Part 1 of BS8110.
First steel perimeter located at d/2 from load face (see Cl.3.7.7.6).
Design to BS8110:1997, partial safety factor for steel gams=1.15.

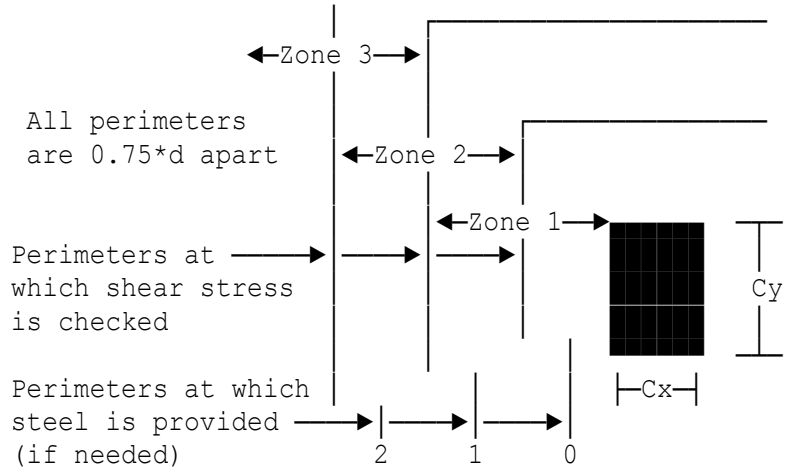

Note:

As the first plane that must be considered is at 1.5*d from face of concentrated load (see Figure 3.17 in Code), no enhancement of vc (Clause 3.7.7.4) is applicable.

Average flexural steel percentage p=0.15 %
Characteristic concrete strength fcu=30 N/mm²
Design ult.load per unit area n=14 kN/m²
Char. strength of shear reinf. fyv=500 N/mm²
Initial dia. for shear reinf. dial=8 mm
According to Clause 3.4.5.8 of BS8110, absolute maximum shear stress
must not exceed 0.8√fcu and thus vlim=0.8*SQR(fcu)=4.3818 N/mm²
Maximum design shear stress vmax=1000*Veff/(uo*d)=2.8571 N/mm²

Calculations for Zone 1 i.e. for Steel Perimeters 0 and 1

Distance from load face to
shear perimeter being checked lp=1500 mm
Number of legs to be provided along inner steel perimeter 0 ni=104

Location of Steel Perimeter 0 : 500 mm from face of loaded area.
Along Steel Perimeter 0 : provide 8 mm dia legs at 50 mm spacing.
Number of legs on perimeter 0 ni=INT(usi/spi)+1=123

Location of Steel Perimeter 1 : 1250 mm from face of loaded area.
Along Steel Perimeter 1 : provide 8 mm dia legs at 80 mm spacing.
Number of legs on perimeter 1 no=INT(uso/sp)+1=152

Calculations for Zone 2 i.e. for Steel Perimeter 2

Distance from load face to
shear perimeter being checked lp=2250 mm

As v does not exceed vc, no shear reinforcement is required on steel perimeter 2 and thus the calculations are complete.

Total number of 8 mm links required is 275

Note: All shear reinforcement must be anchored round at least one layer of tension steel (Clause 3.7.7.6)

Location: Ex1 - High shear force on moderately-thick slab

Punching shear round concentrated load in accordance with EC2

Calculations are in accordance with Section 6.4 of EC2, Part 1-1.
Partial safety factor (steel) gams=1.15
Partial safety factor (concrete) gamc=1.5

Definitions:
- loaded area refers to the cross-sectional area of the column
- load perimeter refers to the column perimeter
- load face refers to the column face
- face of the load refers to the face of the column
- loaded area dimensions refers to column area dimensions

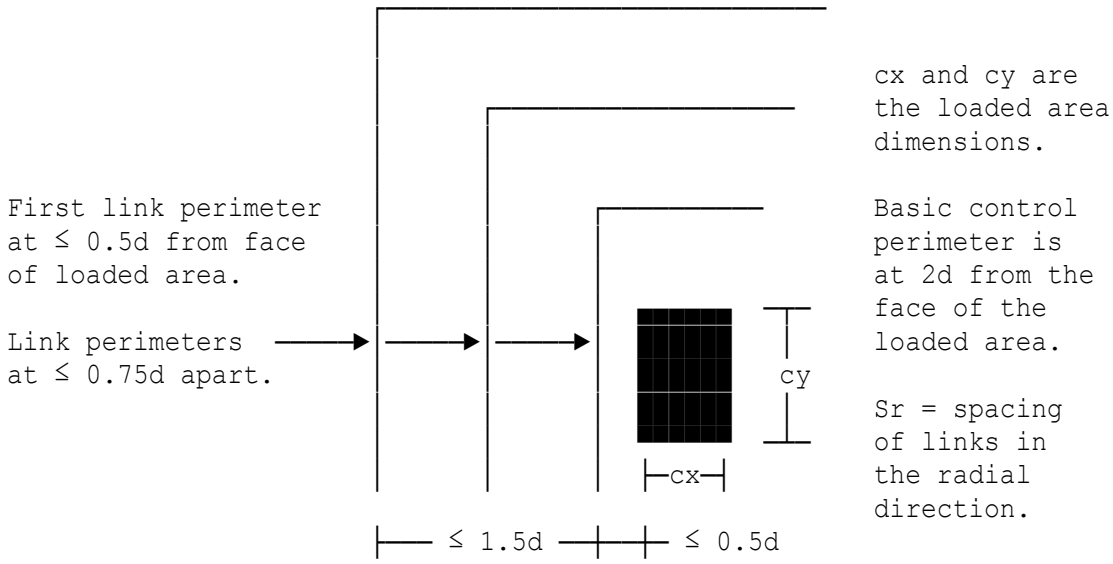

Design applied shear force VEd=2300 kN
Average effective depth d=320 mm
Dimension of loaded area cx=400 mm
Dimension of loaded area cy=550 mm

Check shear stress at the load perimeter

Punching shear force VEd=2300 kN
Shear stress at load perimeter vEd=beta*VEd*1000/(uo*d)=4.3503 N/mm²
Maximum punching shear resistance vRdmax=0.5*v*fcd=5.5808 N/mm²
As vEd ≤ vRdmax, shear stress at load perimeter is within the maximum punching shear resistance. Hence satisfactory.

Check shear stress at control perimeter u1 at 2d from load face

Reinforcement ratio in x-dir p1x=0.012
Reinforcement ratio in y-dir p1y=0.012
As vEd > vRdc punching shear reinforcement needs to be provided.

Outer control perimeter where shear links are no longer required

Outer control perimeter Uout=beta*VEd*1000/(d*vRdc)=11416 mm
Radius to Uout rout=(Uout-lcf)/(2*PI)=1514.5 mm
The outer perimeter of shear reinforcement should be at a distance not greater than 1.5d from the outer control perimeter Uout. Radius to outer perimeter of shear reinforcement Outper=rout-1.5*d
=1034.5 mm from load face

Shear links on basic control perimeter u1

Spac.inside 2d control perimeter St=450 mm
Spac.outside control perimeter u1 St'=600 mm
Char yield strength of reinft. fyk=500 N/mm²
Diameter of shear reinforcement dial=12 mm
Spacing of links to be used spac=270 mm
Use minimum H 12 (113.1 mm²) legs of links @ 270 mm c/c around perimeter u1 (i.e. in the tangential direction).

Summary of punching shear links

In the following calculation the first perimeter will be taken at 0.5d from the face of the load and subsequent perimeters will be spaced at 0.75d apart.

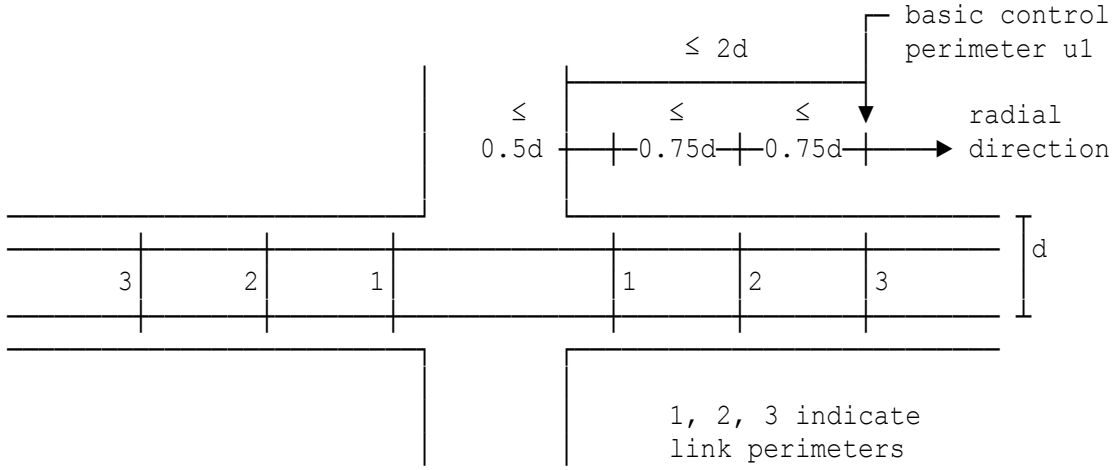

Links on perimeter 1 :
Use minimum H 12 (113.1 mm²) legs of links @ 130 mm c/c in the tangential direction and 240 mm c/c in the radial direction.

Links on perimeter 2 :
Use minimum H 12 (113.1 mm²) legs of links @ 200 mm c/c in the tangential direction and 240 mm c/c in the radial direction.

Links on perimeter 3 :
Use minimum H 12 (113.1 mm²) legs of links @ 270 mm c/c in the tangential direction and 240 mm c/c in the radial direction.

Links on perimeters beyond basic control perimeter u1

Links on perimeter 4 :
Use minimum H 12 (113.1 mm²) legs of links @ 340 mm c/c in the tangential direction and 240 mm c/c in the radial direction.

Links on perimeter 5 :
Use minimum H 12 (113.1 mm²) legs of links @ 410 mm c/c in the tangential direction and 240 mm c/c in the radial direction.

Location: Ex2 - Moderate shear force on thin slab

Punching shear round concentrated load in accordance with EC2

Calculations are in accordance with Section 6.4 of EC2, Part 1-1.
Partial safety factor (steel) gams=1.15
Partial safety factor (concrete) gamc=1.5

Definitions:
- loaded area refers to the cross-sectional area of the column
- load perimeter refers to the column perimeter
- load face refers to the column face
- face of the load refers to the face of the column
- loaded area dimensions refers to column area dimensions

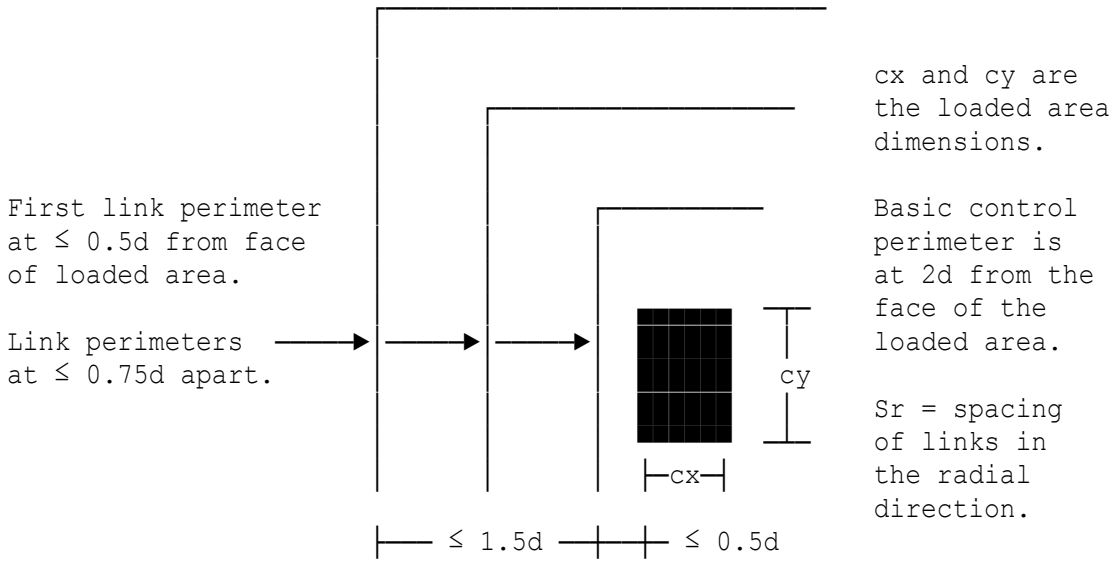

Design applied shear force VEd=400 kN
Average effective depth d=120 mm
Dimension of loaded area cx=400 mm
Dimension of loaded area cy=600 mm

Check shear stress at the load perimeter

Punching shear force VEd=400 kN
Shear stress at load perimeter vEd=beta*VEd*1000/(uo*d)=1.9167 N/mm²
Maximum punching shear resistance vRdmax=0.5*v*fcd=5.5808 N/mm²
As vEd ≤ vRdmax, shear stress at load perimeter is within the maximum punching shear resistance. Hence satisfactory.

Check shear stress at control perimeter u1 at 2d from load face

Reinforcement ratio in x-dir p1x=0.004
Reinforcement ratio in y-dir p1y=0.004
As vEd > vRdc punching shear reinforcement needs to be provided.

Outer control perimeter where shear links are no longer required

Outer control perimeter Uout=beta*VEd*1000/(d*vRdc)=6833.8 mm
Radius to Uout rout=(Uout-lcf)/(2*PI)=769.33 mm
The outer perimeter of shear reinforcement should be at a distance not greater than 1.5d from the outer control perimeter Uout. Radius to outer perimeter of shear reinforcement Outper=rout-1.5*d
=589.33 mm from load face

Shear links on basic control perimeter u1

Spac.inside 2d control perimeter St=180 mm
Spac.outside control perimeter u1 St'=240 mm
Char yield strength of reinft. fyk=500 N/mm²
Diameter of shear reinforcement dial=6 mm
Spacing of links to be used spac=180 mm
Use minimum H 6 (28.274 mm²) legs of links @ 180 mm c/c around perimeter u1 (i.e. in the tangential direction).

Summary of punching shear links

In the following calculation the first perimeter will be taken at 0.5d from the face of the load and subsequent perimeters will be spaced at 0.75d apart.

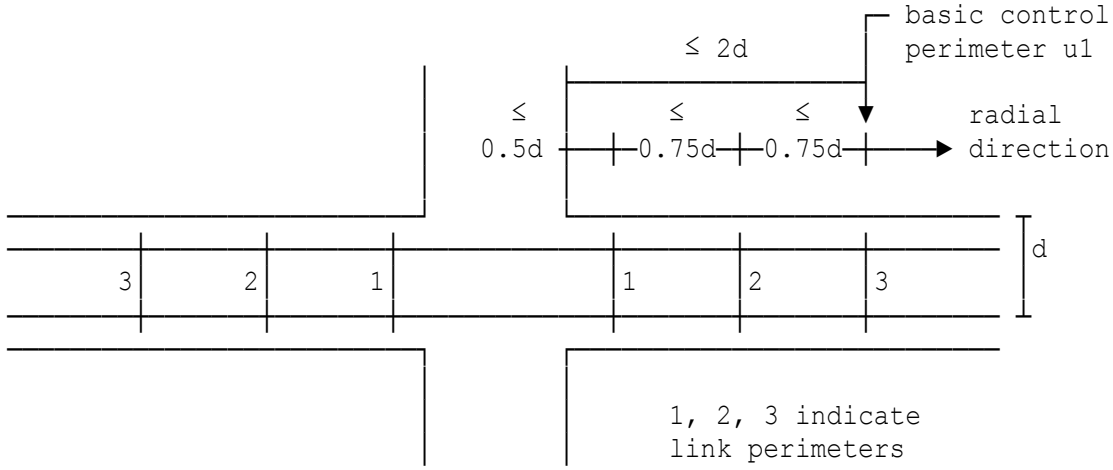

Links on perimeter 1 :
Use minimum H 6 (28.274 mm²) legs of links @ 130 mm c/c in the tangential direction and 90 mm c/c in the radial direction.

Links on perimeter 2 :
Use minimum H 6 (28.274 mm²) legs of links @ 160 mm c/c in the tangential direction and 90 mm c/c in the radial direction.

Links on perimeter 3 :
Use minimum H 6 (28.274 mm²) legs of links @ 180 mm c/c in the tangential direction and 90 mm c/c in the radial direction.

Links on perimeters beyond basic control perimeter u1

Links on perimeter 4 :
Use minimum H 6 (28.274 mm²) legs of links @ 225 mm c/c in the tangential direction and 90 mm c/c in the radial direction.

Links on perimeter 5 :
Use minimum H 6 (28.274 mm²) legs of links @ 240 mm c/c in the tangential direction and 90 mm c/c in the radial direction.

Links on perimeter 6 :
Use minimum H 6 (28.274 mm²) legs of links @ 240 mm c/c in the tangential direction and 90 mm c/c in the radial direction.

Links on perimeter 7 :
Use minimum H 6 (28.274 mm²) legs of links @ 240 mm c/c in the tangential direction and 90 mm c/c in the radial direction.

Location: Ex3 - High shear force on thick slab using high-yield steel

Punching shear round concentrated load in accordance with EC2

Calculations are in accordance with Section 6.4 of EC2, Part 1-1.
Partial safety factor (steel) gams=1.15
Partial safety factor (concrete) gamc=1.5

Definitions:
- loaded area refers to the cross-sectional area of the column
- load perimeter refers to the column perimeter
- load face refers to the column face
- face of the load refers to the face of the column
- loaded area dimensions refers to column area dimensions

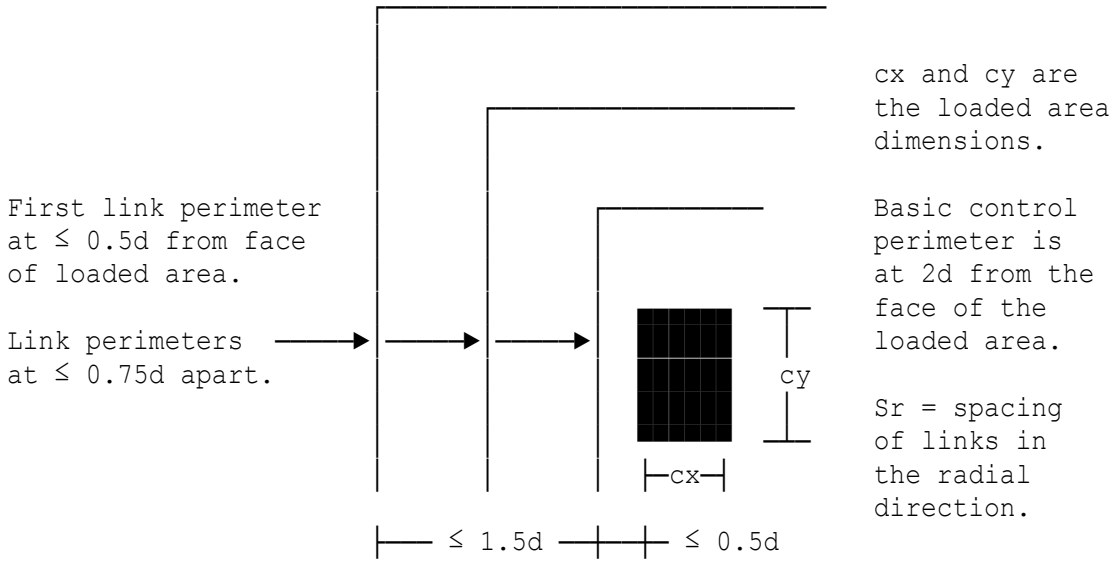

Design applied shear force VEd=6000 kN
Average effective depth d=1000 mm
Dimension of loaded area cx=350 mm
Dimension of loaded area cy=700 mm

Check shear stress at the load perimeter

Punching shear force VEd=6000 kN
Shear stress at load perimeter vEd=beta*VEd*1000/(uo*d)=3.2857 N/mm²
Maximum punching shear resistance vRdmax=0.5*v*fcd=4.5 N/mm²
As vEd ≤ vRdmax, shear stress at load perimeter is within the maximum punching shear resistance. Hence satisfactory.

Check shear stress at control perimeter u1 at 2d from load face

Reinforcement ratio in x-dir p1x=0.0015
Reinforcement ratio in y-dir p1y=0.0015
As vEd > vRdc punching shear reinforcement needs to be provided.

Outer control perimeter where shear links are no longer required

Outer control perimeter Uout=beta*VEd*1000/(d*vRdc)=22647 mm
Radius to Uout rout=(Uout-lcf)/(2*PI)=3270.2 mm
The outer perimeter of shear reinforcement should be at a distance not greater than 1.5d from the outer control perimeter Uout. Radius to outer perimeter of shear reinforcement Outper=rout-1.5*d
=1770.2 mm from load face

Shear links on basic control perimeter u1

Spac.inside 2d control perimeter St=1500 mm
Spac.outside control perimeter u1 St'=2000 mm
Char yield strength of reinft. fyk=500 N/mm²
Diameter of shear reinforcement dial=10 mm
Spacing of links to be used spac=280 mm
Use minimum H 10 (78.54 mm²) legs of links @ 280 mm c/c around perimeter u1 (i.e. in the tangential direction).

Summary of punching shear links

In the following calculation the first perimeter will be taken at 0.5d from the face of the load and subsequent perimeters will be spaced at 0.75d apart.

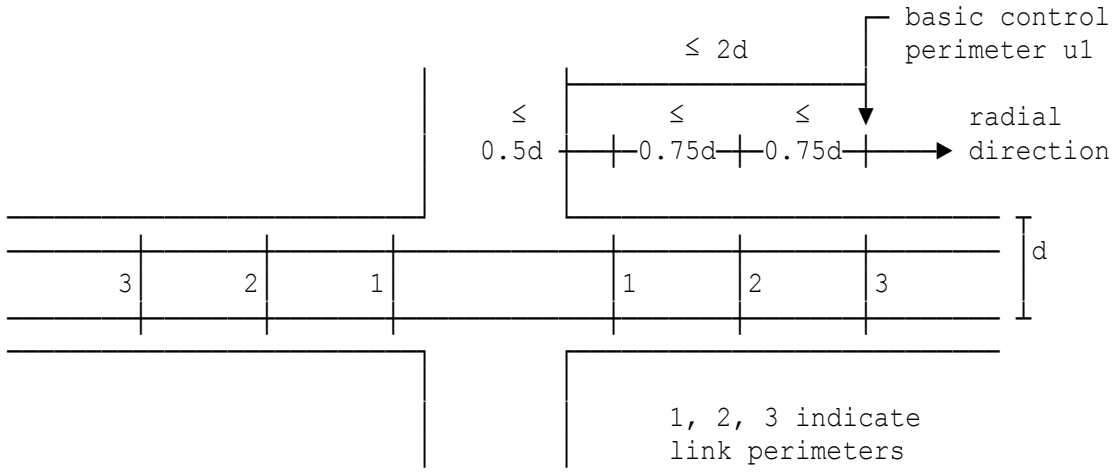

Links on perimeter 1 :
Use minimum H 10 (78.54 mm²) legs of links @ 100 mm c/c in the tangential direction and 750 mm c/c in the radial direction.

Links on perimeter 2 :
Use minimum H 10 (78.54 mm²) legs of links @ 190 mm c/c in the tangential direction and 750 mm c/c in the radial direction.

Links on perimeter 3:
Use minimum H 10 (78.54 mm²) legs of links @ 280 mm c/c in the tangential direction and 750 mm c/c in the radial direction.

Links on perimeters beyond basic control perimeter u1

Location: Ex4 - High shear force internal load case

Punching shear round concentrated load in accordance with EC2

Calculations are in accordance with Section 6.4 of EC2, Part 1-1.
Partial safety factor (steel) gams=1.15
Partial safety factor (concrete) gamc=1.5

Definitions:
- loaded area refers to the cross-sectional area of the column
- load perimeter refers to the column perimeter
- load face refers to the column face
- face of the load refers to the face of the column
- loaded area dimensions refers to column area dimensions

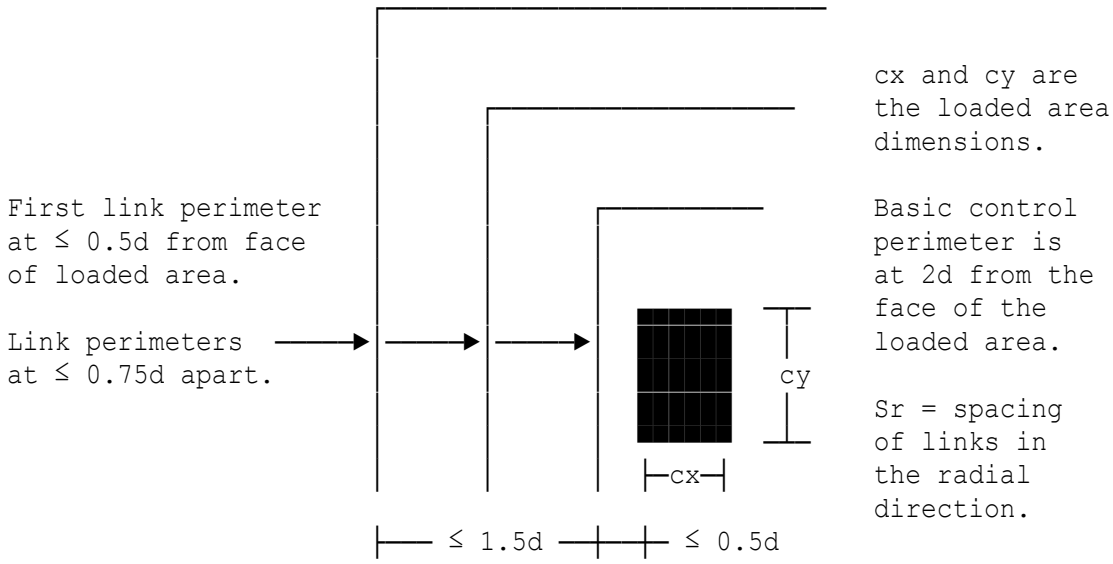

Design applied shear force VEd=1204.8 kN
Average effective depth d=250 mm
Dimension of loaded area cx=400 mm
Dimension of loaded area cy=400 mm

Check shear stress at the load perimeter

Punching shear force VEd=1204.8 kN
Shear stress at load perimeter vEd=beta*VEd*1000/(uo*d)=3.4638 N/mm²
Maximum punching shear resistance vRdmax=0.5*v*fcd=5.28 N/mm²
As vEd ≤ vRdmax, shear stress at load perimeter is within the maximum punching shear resistance. Hence satisfactory.

Check shear stress at control perimeter u1 at 2d from load face

Reinforcement ratio in x-dir p1x=0.0085
Reinforcement ratio in y-dir p1y=0.0048
As vEd > vRdc punching shear reinforcement needs to be provided.

Outer control perimeter where shear links are no longer required

Outer control perimeter Uout=beta*VEd*1000/(d*vRdc)=9119.2 mm
Radius to Uout rout=(Uout-lcf)/(2*PI)=1196.7 mm
The outer perimeter of shear reinforcement should be at a distance not greater than 1.5d from the outer control perimeter Uout. Radius to outer perimeter of shear reinforcement Outper=rout-1.5*d
=821.72 mm from load face

Shear links on basic control perimeter u1

Spac.inside 2d control perimeter St=350 mm
Spac.outside control perimeter u1 St'=500 mm
Char yield strength of reinft. fyk=500 N/mm²
Diameter of shear reinforcement dial=10 mm
Spacing of links to be used spac=275 mm
Use minimum H 10 (78.54 mm²) legs of links @ 275 mm c/c around perimeter u1 (i.e. in the tangential direction).

Summary of punching shear links

In the following calculation the first perimeter will be taken at 0.5d from the face of the load and subsequent perimeters will be spaced at 0.75d apart.

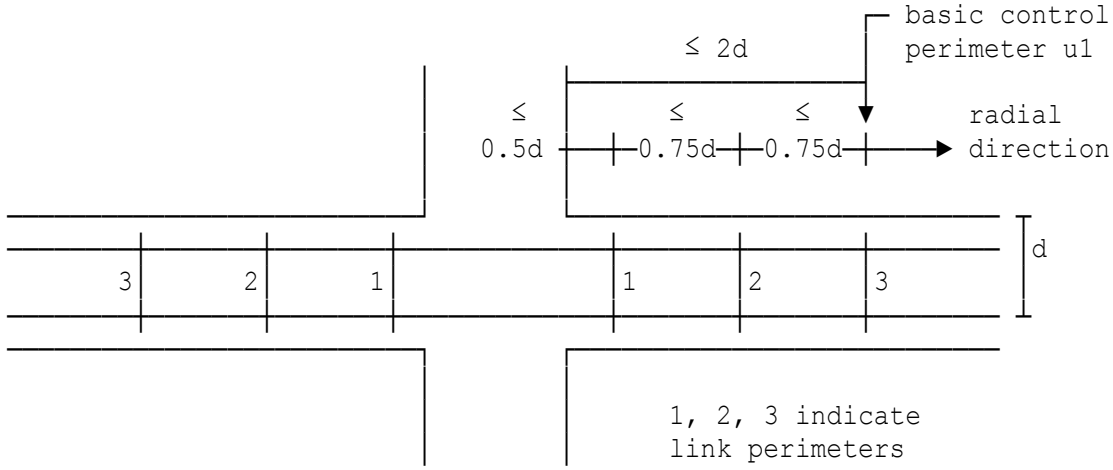

Links on perimeter 1 :
Use minimum H 10 (78.54 mm²) legs of links @ 140 mm c/c in the tangential direction and 185 mm c/c in the radial direction.

Links on perimeter 2 :
Use minimum H 10 (78.54 mm²) legs of links @ 205 mm c/c in the tangential direction and 185 mm c/c in the radial direction.

Links on perimeter 3 :
Use minimum H 10 (78.54 mm²) legs of links @ 275 mm c/c in the tangential direction and 185 mm c/c in the radial direction.

Links on perimeters beyond basic control perimeter u1

Links on perimeter 4 :
Use minimum H 10 (78.54 mm²) legs of links @ 345 mm c/c in the tangential direction and 185 mm c/c in the radial direction.

Links on perimeter 5 :
Use minimum H 10 (78.54 mm²) legs of links @ 415 mm c/c in the tangential direction and 185 mm c/c in the radial direction.

Location: Ex5 - Moderate shear force edge load

Punching shear round concentrated load in accordance with EC2

Calculations are in accordance with Section 6.4 of EC2, Part 1-1.
Partial safety factor (steel) gams=1.15
Partial safety factor (concrete) gamc=1.5

Definitions:
- loaded area refers to the cross-sectional area of the column
- load perimeter refers to the column perimeter
- load face refers to the column face
- face of the load refers to the face of the column
- loaded area dimensions refers to column area dimensions

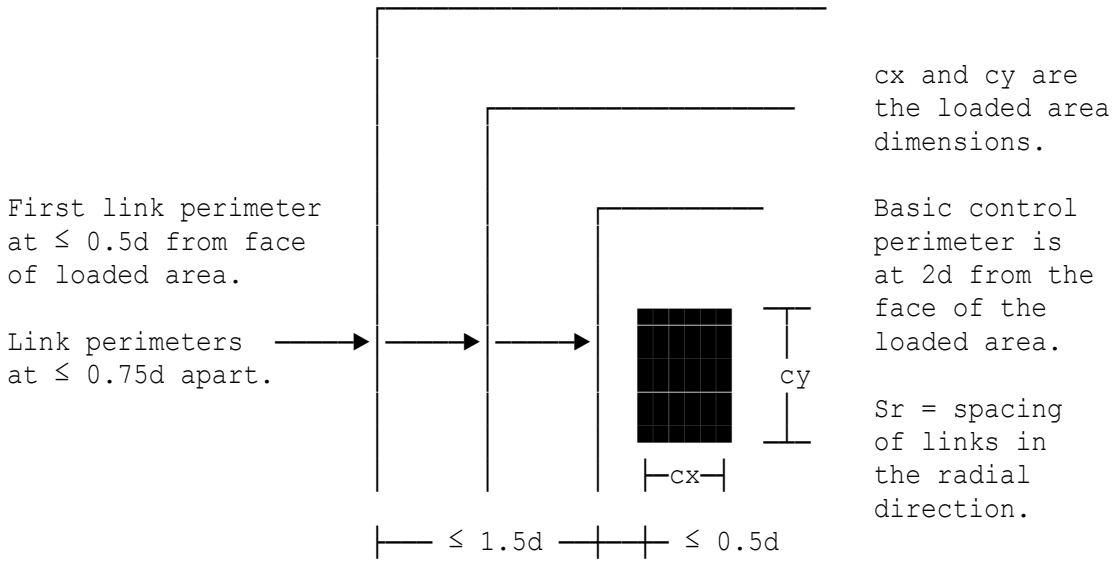

Design applied shear force VEd=609.58 kN
Average effective depth d=250 mm
Dimension of loaded area cx=400 mm
Dimension of loaded area cy=400 mm

Check shear stress at the load perimeter

Punching shear force VEd=609.58 kN
Load dimension c1=400 mm
Load dimension c2=400 mm
Shear stress at load perimeter vEd=beta*VEd*1000/(uo*d)=2.9684 N/mm²
Maximum punching shear resistance vRdmax=0.5*v*fcd=5.28 N/mm²
As vEd ≤ vRdmax, shear stress at load perimeter is within the maximum punching shear resistance. Hence satisfactory.

Check shear stress at control perimeter u1 at 2d from load face

Reinforcement ratio in x-dir p1x=0.0089
Reinforcement ratio in y-dir p1y=0.0069
As vEd > vRdc punching shear reinforcement needs to be provided.

Outer control perimeter where shear links are no longer required

Outer control perimeter Uout=beta*VEd*1000/(d*vRdc)=5247.3 mm
Radius to Uout rout=(Uout-lcf)/(PI)=1304.2 mm
The outer perimeter of shear reinforcement should be at a distance not greater than 1.5d from the outer control perimeter Uout. Radius to outer perimeter of shear reinforcement Outper=rout-1.5*d
=929.21 mm from load face

Shear links on basic control perimeter u1

Spac.inside 2d control perimeter St=350 mm
Spac.outside control perimeter u1 St'=500 mm
Char yield strength of reinft. fyk=500 N/mm²
Diameter of shear reinforcement dial=10 mm
Spacing of links to be used spac=255 mm
Use minimum H 10 (78.54 mm²) legs of links @ 255 mm c/c around perimeter u1 (i.e. in the tangential direction).

Summary of punching shear links

In the following calculation the first perimeter will be taken at 0.5d from the face of the load and subsequent perimeters will be spaced at 0.75d apart.

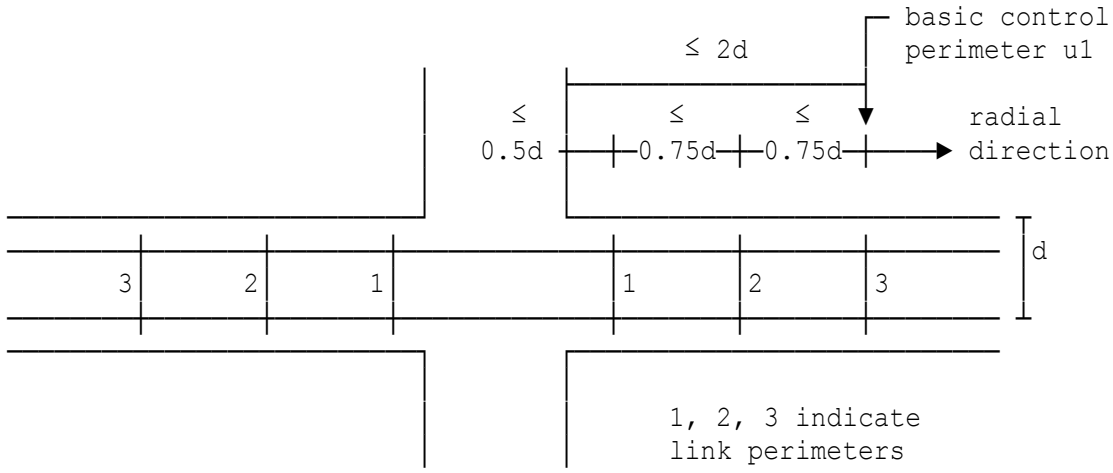

Links on perimeter 1 :
Use minimum H 10 (78.54 mm²) legs of links @ 145 mm c/c in the tangential direction and 185 mm c/c in the radial direction.

Links on perimeter 2 :
Use minimum H 10 (78.54 mm²) legs of links @ 200 mm c/c in the tangential direction and 185 mm c/c in the radial direction.

Links on perimeter 3 :
Use minimum H 10 (78.54 mm²) legs of links @ 255 mm c/c in the tangential direction and 185 mm c/c in the radial direction.

Links on perimeters beyond basic control perimeter u1

Links on perimeter 4 :
Use minimum H 10 (78.54 mm²) legs of links @ 315 mm c/c in the tangential direction and 185 mm c/c in the radial direction.

Links on perimeter 5 :
Use minimum H 10 (78.54 mm²) legs of links @ 370 mm c/c in the tangential direction and 185 mm c/c in the radial direction.

Links on perimeter 6 :
Use minimum H 10 (78.54 mm²) legs of links @ 425 mm c/c in the tangential direction and 185 mm c/c in the radial direction.

Location: Ex6 - Moderate shear force corner load

Punching shear round concentrated load in accordance with EC2

Calculations are in accordance with Section 6.4 of EC2, Part 1-1.
Partial safety factor (steel) gams=1.15
Partial safety factor (concrete) gamc=1.5

Definitions:
- loaded area refers to the cross-sectional area of the column
- load perimeter refers to the column perimeter
- load face refers to the column face
- face of the load refers to the face of the column
- loaded area dimensions refers to column area dimensions

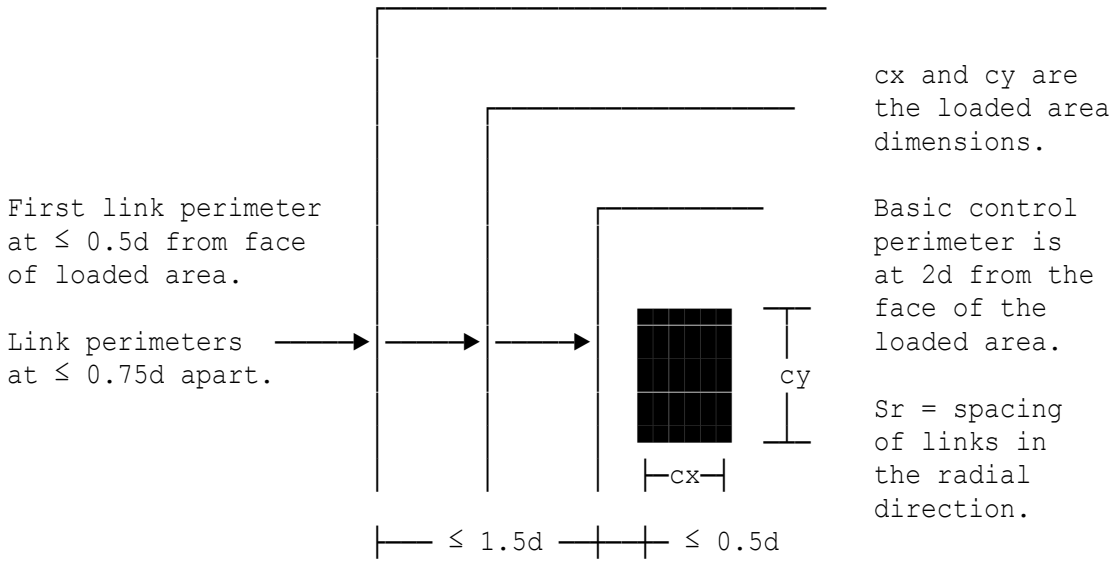

Design applied shear force VEd=300 kN
Average effective depth d=250 mm
Dimension of loaded area cx=400 mm
Dimension of loaded area cy=400 mm

Check shear stress at the load perimeter

Punching shear force VEd=300 kN
Load dimension c1=400 mm
Load dimension c2=400 mm
Shear stress at load perimeter vEd=beta*VEd*1000/(uo*d)=2.4 N/mm²
Maximum punching shear resistance vRdmax=0.5*v*fcd=5.28 N/mm²
As vEd ≤ vRdmax, shear stress at load perimeter is within the maximum punching shear resistance. Hence satisfactory.

Check shear stress at control perimeter u1 at 2d from load face

Reinforcement ratio in x-dir p1x=0.0089
Reinforcement ratio in y-dir p1y=0.0069
As vEd > vRdc punching shear reinforcement needs to be provided.

Outer control perimeter where shear links are no longer required

Outer control perimeter Uout=beta*VEd*1000/(d*vRdc)=2766.9 mm
Radius to Uout rout=(Uout-lcf)/(PI/2)=1284 mm
The outer perimeter of shear reinforcement should be at a distance not greater than 1.5d from the outer control perimeter Uout. Radius to outer perimeter of shear reinforcement Outper=rout-1.5*d
=908.98 mm from load face

Shear links on basic control perimeter u1

Spac.inside 2d control perimeter St=350 mm
Spac.outside control perimeter u1 St'=500 mm
Char yield strength of reinft. fyk=500 N/mm²
Diameter of shear reinforcement dial=10 mm
Spacing of links to be used spac=255 mm
Use minimum H 10 (78.54 mm²) legs of links @ 255 mm c/c around perimeter u1 (i.e. in the tangential direction).

Summary of punching shear links

In the following calculation the first perimeter will be taken at 0.5d from the face of the load and subsequent perimeters will be spaced at 0.75d apart.

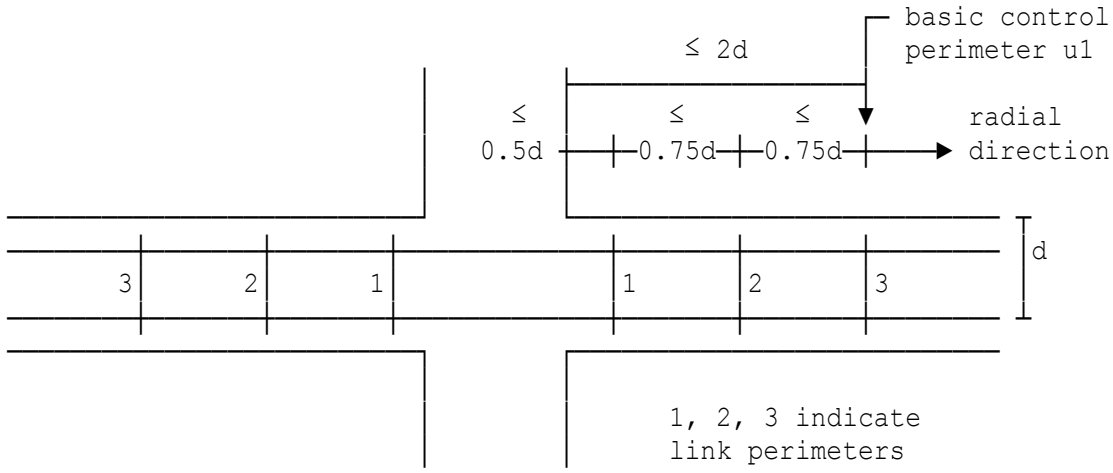

Links on perimeter 1 :
Use minimum H 10 (78.54 mm²) legs of links @ 175 mm c/c in the tangential direction and 185 mm c/c in the radial direction.

Links on perimeter 2 :
Use minimum H 10 (78.54 mm²) legs of links @ 230 mm c/c in the tangential direction and 185 mm c/c in the radial direction.

Links on perimeter 3 :
Use minimum H 10 (78.54 mm²) legs of links @ 255 mm c/c in the tangential direction and 185 mm c/c in the radial direction.

Links on perimeters beyond basic control perimeter u1

Links on perimeter 4 :
Use minimum H 10 (78.54 mm²) legs of links @ 345 mm c/c in the tangential direction and 185 mm c/c in the radial direction.

Links on perimeter 5 :
Use minimum H 10 (78.54 mm²) legs of links @ 400 mm c/c in the tangential direction and 185 mm c/c in the radial direction.

Links on perimeter 6 :
Use minimum H 10 (78.54 mm²) legs of links @ 455 mm c/c in the tangential direction and 185 mm c/c in the radial direction.

Location: Ex7 - Internal rectangular load head

Punching shear round concentrated load in accordance with EC2

Calculations are in accordance with Section 6.4 of EC2, Part 1-1.
Partial safety factor (steel) gams=1.15
Partial safety factor (concrete) gamc=1.5

Definitions:
- loaded area refers to the cross-sectional area of the column head
- load perimeter refers to the column head perimeter
- load head face refers to the column head face
- face of the load head refers to the face of the column head
- loaded area dimensions refers to column head area dimensions

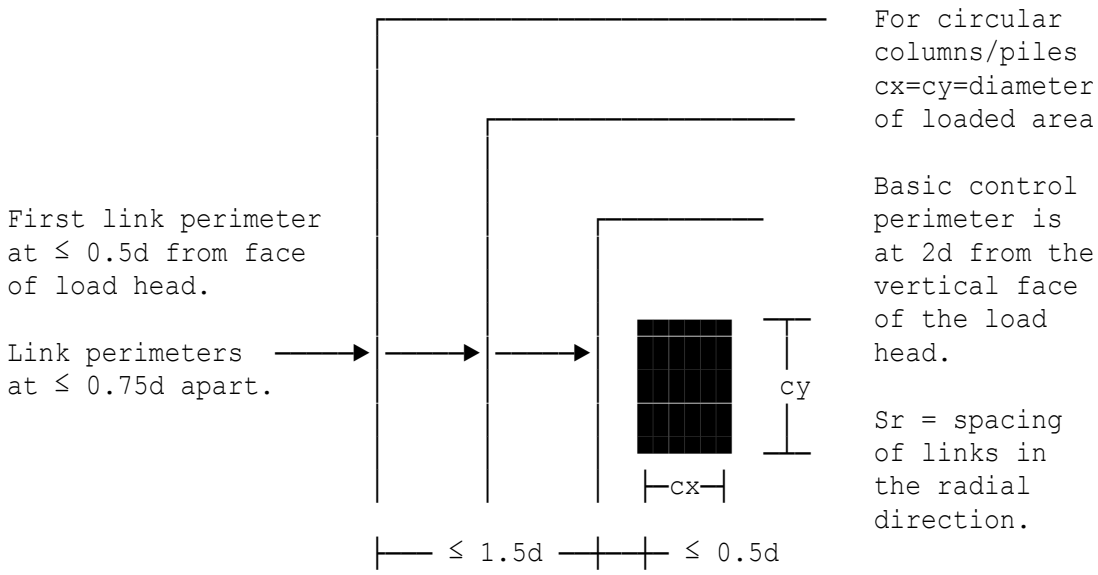

Design applied shear force VEd=2300 kN
Average effective depth d=320 mm
Projection of head from load lH1=500 mm
Load head height below slab hH=300 mm
Load dimension c1=400 mm
Projection of head from load lH2=500 mm
Load head height below slab hH=300 mm
Load dimension c2=550 mm

Check shear stress at the load head perimeter

Punching shear force VEd=2300 kN
Shear stress at load head vEd=beta*VEd*1000/(uo*d)=1.401 N/mm²
Maximum punching shear resistance vRdmax=0.5*v*fcd=5.5808 N/mm²
As vEd ≤ vRdmax, shear stress at load head perimeter is within the maximum punching shear resistance. Hence satisfactory.

Check shear stress at control perimeter u1 at 2d from load head vertical face

Reinforcement ratio in x-dir p1x=0.012
Reinforcement ratio in y-dir p1y=0.012
As vEd > vRdc punching shear reinforcement needs to be provided.

Outer control perimeter where shear links are no longer required

Outer control perimeter Uout=beta*VEd*1000/(d*vRdc)=11416 mm
Radius to Uout rout=(Uout-lcf)/(2*PI)=877.93 mm
The outer perimeter of shear reinforcement required should be placed at a distance not greater than 1.5d from the outer control perimeter Uout.
Radius to outer perimeter of shear reinforcement from the load head vertical face is as follows:
Outper=rout-1.5*d=397.93 mm

Shear links on basic control perimeter u1

Spac.inside 2d control perimeter St=450 mm
Spac.outside control perimeter u1 St'=600 mm
Char yield strength of reinft. fyk=500 N/mm²
Diameter of shear reinforcement dial=12 mm
Spacing of links to be used spac=450 mm
Use minimum H 12 (113.1 mm²) legs of links @ 450 mm c/c around perimeter u1 (i.e. in the tangential direction).

NOTE:
Punching shear links on perimeter 3 (i.e. at 2d from the load head) shown below are optional and could be omitted. This is because the the radius Outper < 1.25*d (397.93 mm < 400 mm).

Summary of punching shear links

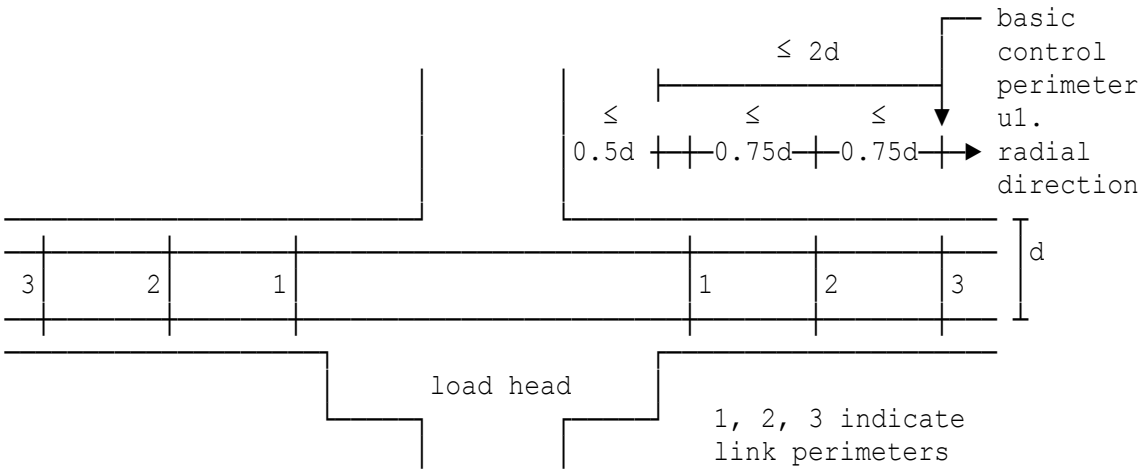

Links on perimeter 1 :
Use minimum H 12 (113.1 mm²) legs of links @ 450 mm c/c in the tangential direction and 240 mm c/c in the radial direction.

Links on perimeter 2 :
Use minimum H 12 (113.1 mm²) legs of links @ 450 mm c/c in the tangential direction and 240 mm c/c in the radial direction.

Links on perimeter 3:
Use minimum H 12 (113.1 mm²) legs of links @ 450 mm c/c in the tangential direction and 240 mm c/c in the radial direction.

Links on perimeters beyond basic control perimeter u1

Load head dimensions - rectangular

Internal load:

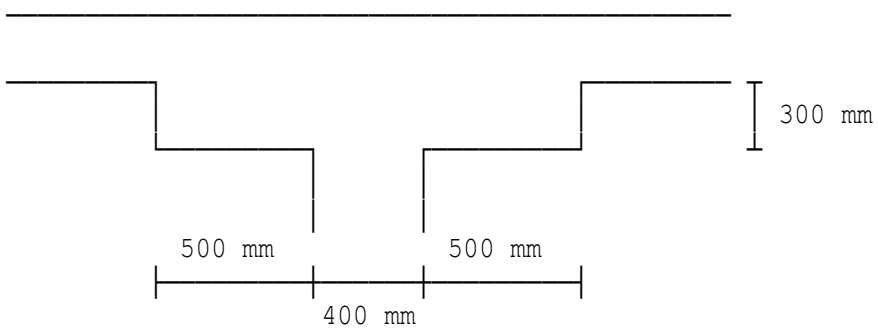

SECTION THROUGH LOAD HEAD (X-direction)

Internal load:

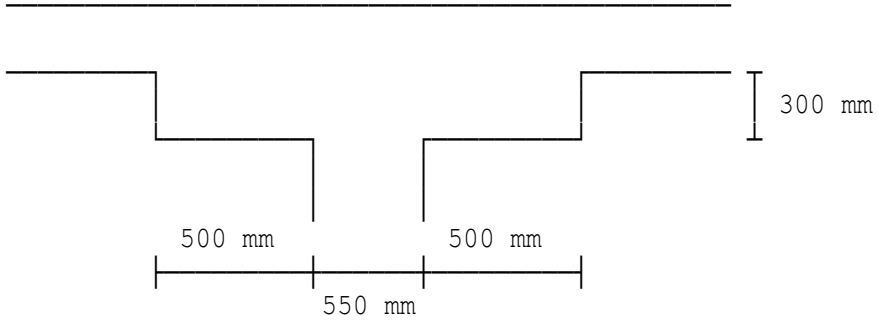

SECTION THROUGH LOAD HEAD (Y-direction)

Location: Ex8 - Internal circular load head

Punching shear round concentrated load in accordance with EC2

Calculations are in accordance with Section 6.4 of EC2, Part 1-1.
Partial safety factor (steel) gams=1.15
Partial safety factor (concrete) gamc=1.5

Definitions:
- loaded area refers to the cross-sectional area of the column head
- load perimeter refers to the column head perimeter
- load head face refers to the column head face
- face of the load head refers to the face of the column head
- loaded area dimensions refers to column head area dimensions

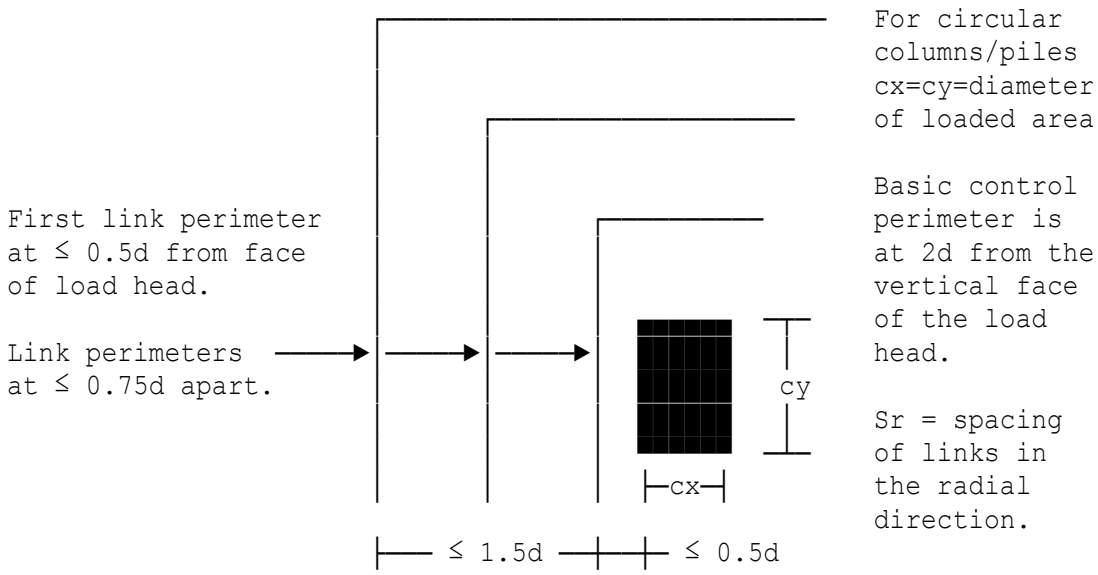

Design applied shear force VEd=2300 kN
Average effective depth d=320 mm
Projection of head from load lH=500 mm
Load head height below slab hH=300 mm
Load dimension (i.e. diameter) c=400 mm

Check shear stress at the load head perimeter

Punching shear force VEd=2300 kN
Shear stress at load head vEd=beta*VEd*1000/(uo*d)=1.8793 N/mm²
Maximum punching shear resistance vRdmax=0.5*v*fcd=5.5808 N/mm²
As vEd ≤ vRdmax, shear stress at load head perimeter is within the maximum punching shear resistance. Hence satisfactory.

Check shear stress at control perimeter u1 at 2d from load head vertical face

Reinforcement ratio in x-dir p1x=0.012
Reinforcement ratio in y-dir p1y=0.012
As vEd > vRdc punching shear reinforcement needs to be provided.

Outer control perimeter where shear links are no longer required

Outer control perimeter Uout=beta*VEd*1000/(d*vRdc)=11416 mm
Radius to Uout rout=(Uout-lcf)/(2*PI)=1116.9 mm
The outer perimeter of shear reinforcement required should be placed at a distance not greater than 1.5d from the outer control perimeter Uout. Radius to outer perimeter of shear reinforcement from the load head vertical face is as follows:
Outper=rout-1.5*d=636.94 mm

Shear links on basic control perimeter u1

Spac.inside 2d control perimeter St=450 mm
Spac.outside control perimeter u1 St'=600 mm
Char yield strength of reinft. fyk=500 N/mm²
Diameter of shear reinforcement dial=12 mm
Spacing of links to be used spac=450 mm
Use minimum H 12 (113.1 mm²) legs of links @ 450 mm c/c around perimeter u1 (i.e. in the tangential direction).

Summary of punching shear links

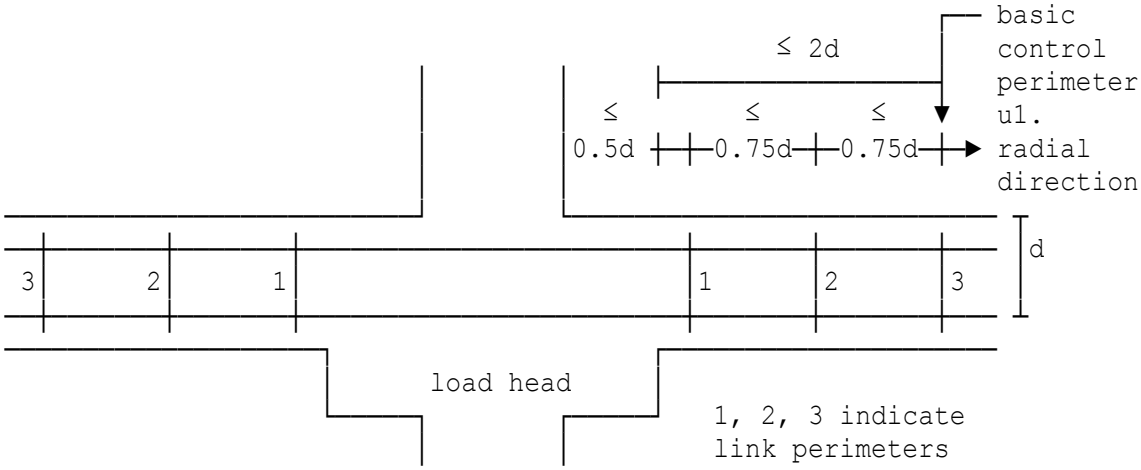

Links on perimeter 1 :
Use minimum H 12 (113.1 mm²) legs of links @ 340 mm c/c in the tangential direction and 240 mm c/c in the radial direction.

Links on perimeter 2 :
Use minimum H 12 (113.1 mm²) legs of links @ 435 mm c/c in the tangential direction and 240 mm c/c in the radial direction.

Links on perimeter 3:
Use minimum H 12 (113.1 mm²) legs of links @ 450 mm c/c in the tangential direction and 240 mm c/c in the radial direction.

Links on perimeters beyond basic control perimeter u1

Load head dimensions - circular

Internal load:

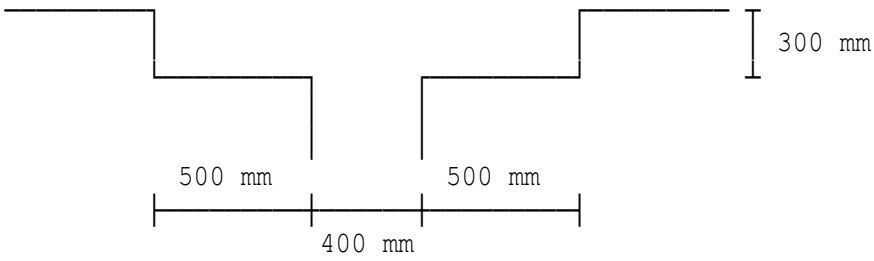

SECTION THROUGH LOAD HEAD

Location: Ex9 - Edge rectangular load with load head

Punching shear round concentrated load in accordance with EC2

Calculations are in accordance with Section 6.4 of EC2, Part 1-1.
Partial safety factor (steel) gams=1.15
Partial safety factor (concrete) gamc=1.5

Definitions:
- loaded area refers to the cross-sectional area of the column head
- load perimeter refers to the column head perimeter
- load head face refers to the column head face
- face of the load head refers to the face of the column head
- loaded area dimensions refers to column head area dimensions

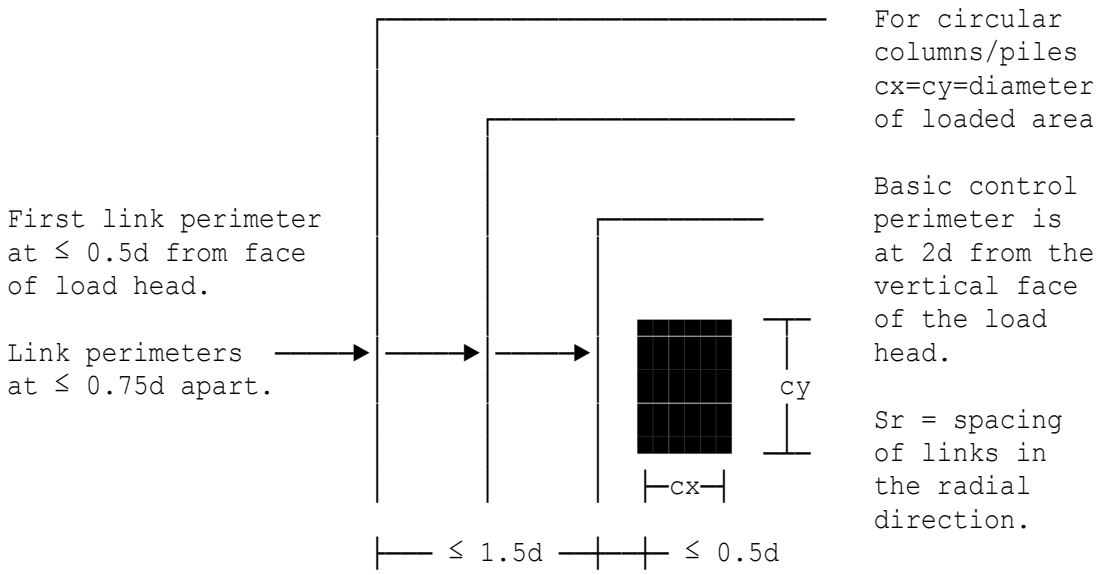

Design applied shear force VEd=609.58 kN
Average effective depth d=250 mm
Projection of head from load lH1=500 mm
Load head height below slab hH=300 mm
Load dimension c1=400 mm
Projection of head from load lH2=500 mm
Load head height below slab hH=300 mm
Load dimension c2=400 mm

Check shear stress at the load head perimeter

Punching shear force VEd=609.58 kN
Shear stress at load head vEd=beta*VEd*1000/(uo*d)=1.5877 N/mm²
Maximum punching shear resistance vRdmax=0.5*v*fcd=5.28 N/mm²
As vEd ≤ vRdmax, shear stress at load head perimeter is within the maximum punching shear resistance. Hence satisfactory.

Check shear stress at control perimeter u1 at 2d from load head vertical face

Reinforcement ratio in x-dir p1x=0.0089
Reinforcement ratio in y-dir p1y=0.0069
As vEd > vRdc punching shear reinforcement needs to be provided.

Outer control perimeter where shear links are no longer required

Outer control perimeter Uout=beta*VEd*1000/(d*vRdc)=5247.3 mm
Radius to Uout rout=(Uout-lcf)/(PI)=985.9 mm
The outer perimeter of shear reinforcement required should be placed at a distance not greater than 1.5d from the outer control perimeter Uout.
Radius to outer perimeter of shear reinforcement from the load head vertical face is as follows:
Outper=rout-1.5*d=610.9 mm

Shear links on basic control perimeter u1

Spac.inside 2d control perimeter St=350 mm
Spac.outside control perimeter u1 St'=500 mm
Char yield strength of reinft. fyk=500 N/mm²
Diameter of shear reinforcement dial=8 mm
Spacing of links to be used spac=295 mm
Use minimum H 8 (50.265 mm²) legs of links @ 295 mm c/c around perimeter u1 (i.e. in the tangential direction).

Summary of punching shear links

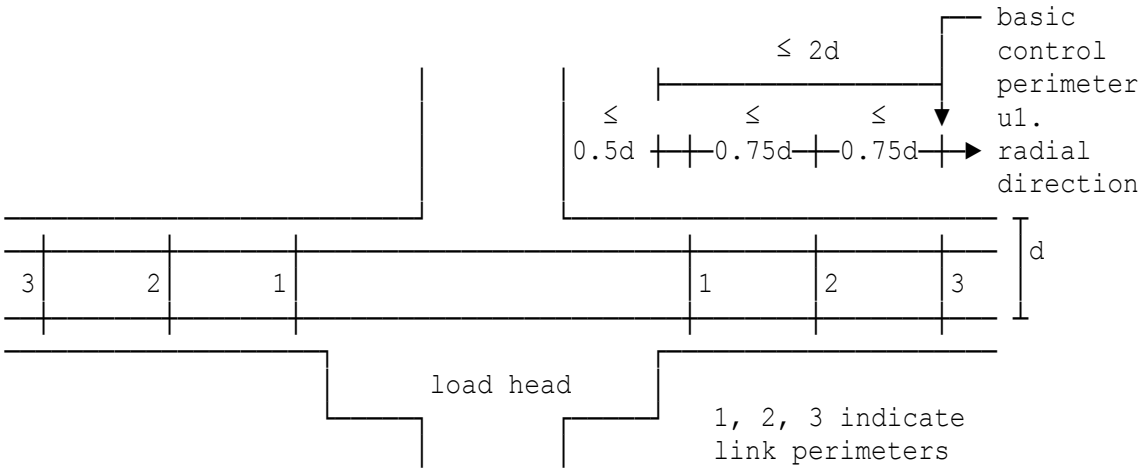

Links on perimeter 1 :
Use minimum H 8 (50.265 mm²) legs of links @ 200 mm c/c in the tangential direction and 185 mm c/c in the radial direction.

Links on perimeter 2 :
Use minimum H 8 (50.265 mm²) legs of links @ 245 mm c/c in the tangential direction and 185 mm c/c in the radial direction.

Links on perimeter 3 :
Use minimum H 8 (50.265 mm²) legs of links @ 295 mm c/c in the tangential direction and 185 mm c/c in the radial direction.

Links on perimeters beyond basic control perimeter u1

Links on perimeter 4 :
Use minimum H 8 (50.265 mm²) legs of links @ 340 mm c/c in the tangential direction and 185 mm c/c in the radial direction.

Load head dimensions - rectangular

Edge load:

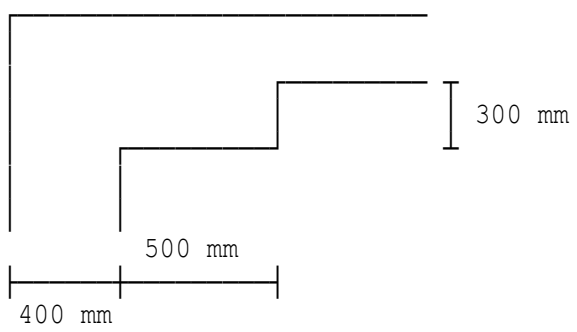

SECTION THROUGH LOAD HEAD (X-direction)

Edge load:

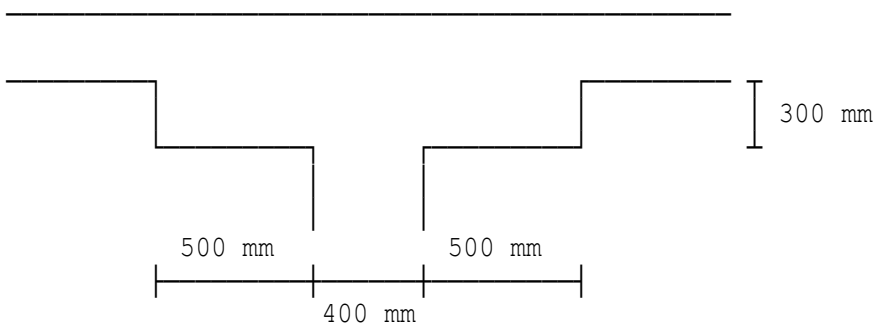

SECTION THROUGH LOAD HEAD (Y-direction)

Location: Ex10 - Corner rectangular load with load head

Punching shear round concentrated load in accordance with EC2

Calculations are in accordance with Section 6.4 of EC2, Part 1-1.
Partial safety factor (steel) gams=1.15
Partial safety factor (concrete) gamc=1.5

Definitions:
- loaded area refers to the cross-sectional area of the column head
- load perimeter refers to the column head perimeter
- load head face refers to the column head face
- face of the load head refers to the face of the column head
- loaded area dimensions refers to column head area dimensions

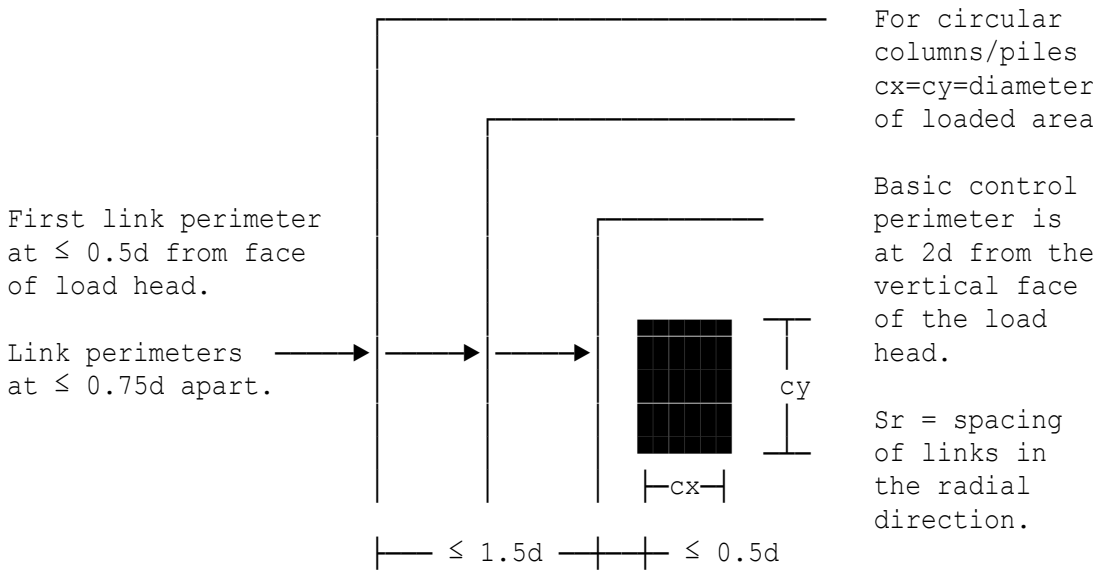

Design applied shear force VEd=300 kN
Average effective depth d=250 mm
Projection of head from load lH1=500 mm
Load head height below slab hH=300 mm
Load dimension c1=400 mm
Projection of head from load lH2=500 mm
Load head height below slab hH=300 mm
Load dimension c2=400 mm

Check shear stress at the load head perimeter

Punching shear force VEd=300 kN
Shear stress at load head vEd=beta*VEd*1000/(uo*d)=2.4 N/mm²
Maximum punching shear resistance vRdmax=0.5*v*fcd=5.28 N/mm²
As vEd ≤ vRdmax, shear stress at load head perimeter is within the maximum punching shear resistance. Hence satisfactory.

Check shear stress at control perimeter u1 at 2d from load head vertical face

Reinforcement ratio in x-dir p1x=0.0089
Reinforcement ratio in y-dir p1y=0.0069
As vEd > vRdc punching shear reinforcement needs to be provided.

Outer control perimeter where shear links are no longer required

Outer control perimeter Uout=beta*VEd*1000/(d*vRdc)=2766.9 mm
Radius to Uout rout=(Uout-lcf)/(PI/2)=1284 mm
The outer perimeter of shear reinforcement required should be placed at a distance not greater than 1.5d from the outer control perimeter Uout.
Radius to outer perimeter of shear reinforcement from the load head vertical face is as follows:
Outper=rout-1.5*d=908.98 mm

Shear links on basic control perimeter u1

Spac.inside 2d control perimeter St=350 mm
Spac.outside control perimeter u1 St'=500 mm
Char yield strength of reinft. fyk=500 N/mm²
Diameter of shear reinforcement dial=8 mm
Spacing of links to be used spac=185 mm
Use minimum H 8 (50.265 mm²) legs of links @ 185 mm c/c around perimeter u1 (i.e. in the tangential direction).

Summary of punching shear links

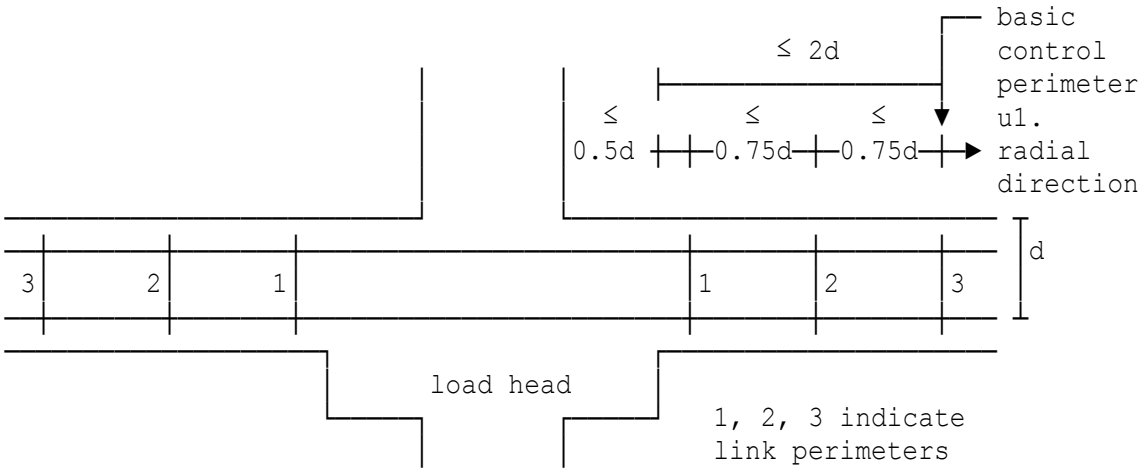

Links on perimeter 1 :
Use minimum H 8 (50.265 mm²) legs of links @ 110 mm c/c in the tangential direction and 185 mm c/c in the radial direction.

Links on perimeter 2 :
Use minimum H 8 (50.265 mm²) legs of links @ 150 mm c/c in the tangential direction and 185 mm c/c in the radial direction.

Links on perimeter 3 :
Use minimum H 8 (50.265 mm²) legs of links @ 185 mm c/c in the tangential direction and 185 mm c/c in the radial direction.

Links on perimeters beyond basic control perimeter u1

Links on perimeter 4 :
Use minimum H 8 (50.265 mm²) legs of links @ 220 mm c/c in the tangential direction and 185 mm c/c in the radial direction.

Links on perimeter 5 :
Use minimum H 8 (50.265 mm²) legs of links @ 255 mm c/c in the tangential direction and 185 mm c/c in the radial direction.

Links on perimeter 6 :
Use minimum H 8 (50.265 mm²) legs of links @ 290 mm c/c in the tangential direction and 185 mm c/c in the radial direction.

Load head dimensions - rectangular

Corner load:

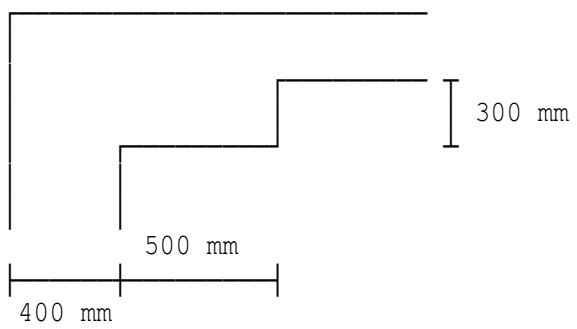

SECTION THROUGH LOAD HEAD (X-direction)

Corner load:

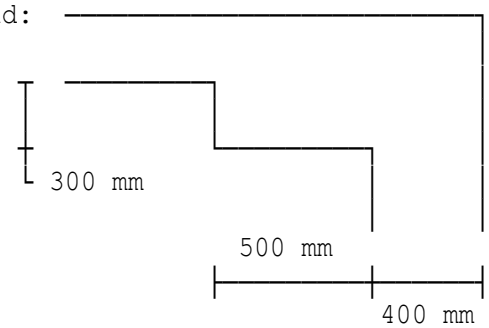

SECTION THROUGH LOAD HEAD (Y-direction)

Location: Ex11 - As Ex1 but using circular column 400mm diameter

Punching shear round concentrated load in accordance with EC2

Calculations are in accordance with Section 6.4 of EC2, Part 1-1.
Partial safety factor (steel) gams=1.15
Partial safety factor (concrete) gamc=1.5

Definitions:
- loaded area refers to the cross-sectional area of the column
- load perimeter refers to the column perimeter
- load face refers to the column face
- face of the load refers to the face of the column
- loaded area dimensions refers to column area dimensions

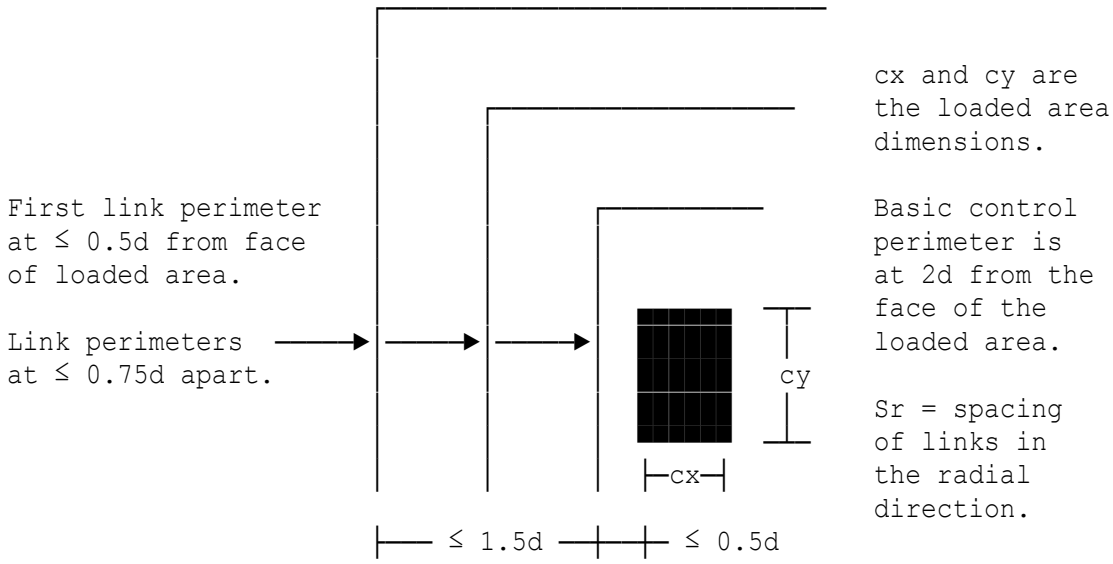

Design applied shear force VEd=1400 kN
Average effective depth d=320 mm
Dimension of loaded area cx=300 mm
Dimension of loaded area cy=300 mm

Check shear stress at the load perimeter

Punching shear force VEd=1400 kN
Shear stress at load perimeter vEd=beta*VEd*1000/(uo*d)=4.1927 N/mm²
Maximum punching shear resistance vRdmax=0.5*v*fcd=5.5808 N/mm²
As vEd ≤ vRdmax, shear stress at load perimeter is within the maximum punching shear resistance. Hence satisfactory.

Check shear stress at control perimeter u1 at 2d from load face

Reinforcement ratio in x-dir p1x=0.012
Reinforcement ratio in y-dir p1y=0.012
As vEd > vRdc punching shear reinforcement needs to be provided.

Outer control perimeter where shear links are no longer required

Outer control perimeter Uout=beta*VEd*1000/(d*vRdc)=6949 mm
Radius to Uout rout=(Uout-lcf)/(2*PI)=914.98 mm
The outer perimeter of shear reinforcement should be at a distance not greater than 1.5d from the outer control perimeter Uout. Radius to outer perimeter of shear reinforcement Outper=rout-1.5*d
=434.98 mm from load face

Shear links on basic control perimeter u1

Spac.inside 2d control perimeter St=450 mm
Spac.outside control perimeter u1 St'=600 mm
Char yield strength of reinft. fyk=500 N/mm²
Diameter of shear reinforcement dial=12 mm
Spacing of links to be used spac=450 mm
Use minimum H 12 (113.1 mm²) legs of links @ 450 mm c/c around perimeter u1 (i.e. in the tangential direction).

Summary of punching shear links

In the following calculation the first perimeter will be taken at 0.5d from the face of the load and subsequent perimeters will be spaced at 0.75d apart.

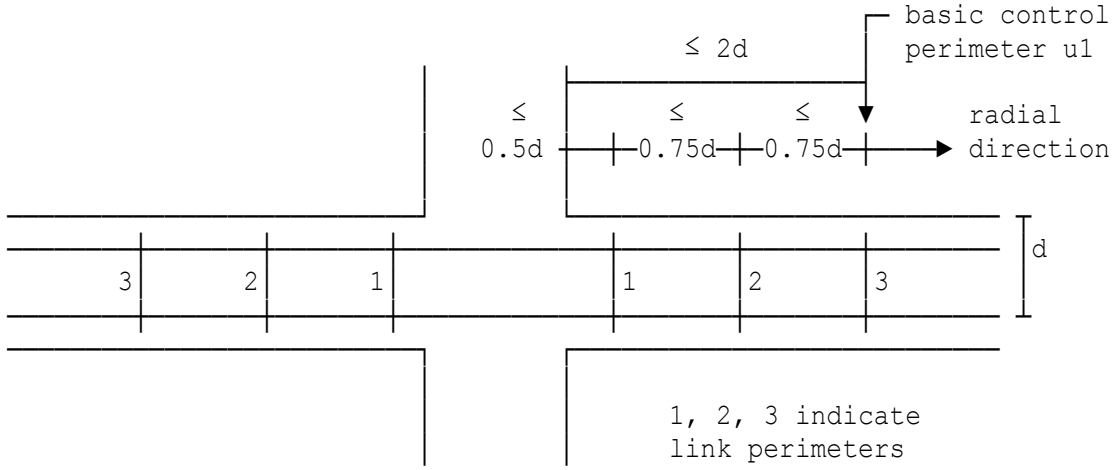

Links on perimeter 1 :
Use minimum H 12 (113.1 mm²) legs of links @ 230 mm c/c in the tangential direction and 240 mm c/c in the radial direction.

Links on perimeter 2 :
Use minimum H 12 (113.1 mm²) legs of links @ 390 mm c/c in the tangential direction and 240 mm c/c in the radial direction.

Links on perimeter 3:
Use minimum H 12 (113.1 mm²) legs of links @ 450 mm c/c in the tangential direction and 240 mm c/c in the radial direction.

Links on perimeters beyond basic control perimeter u1

Location: Ex12 - Assume zero load head dimensions (lH=hH=0 mm)

Punching shear round concentrated load in accordance with EC2

Calculations are in accordance with Section 6.4 of EC2, Part 1-1.
Partial safety factor (steel) gams=1.15
Partial safety factor (concrete) gamc=1.5

Definitions:
- loaded area refers to the cross-sectional area of the column head
- load perimeter refers to the column head perimeter
- load head face refers to the column head face
- face of the load head refers to the face of the column head
- loaded area dimensions refers to column head area dimensions

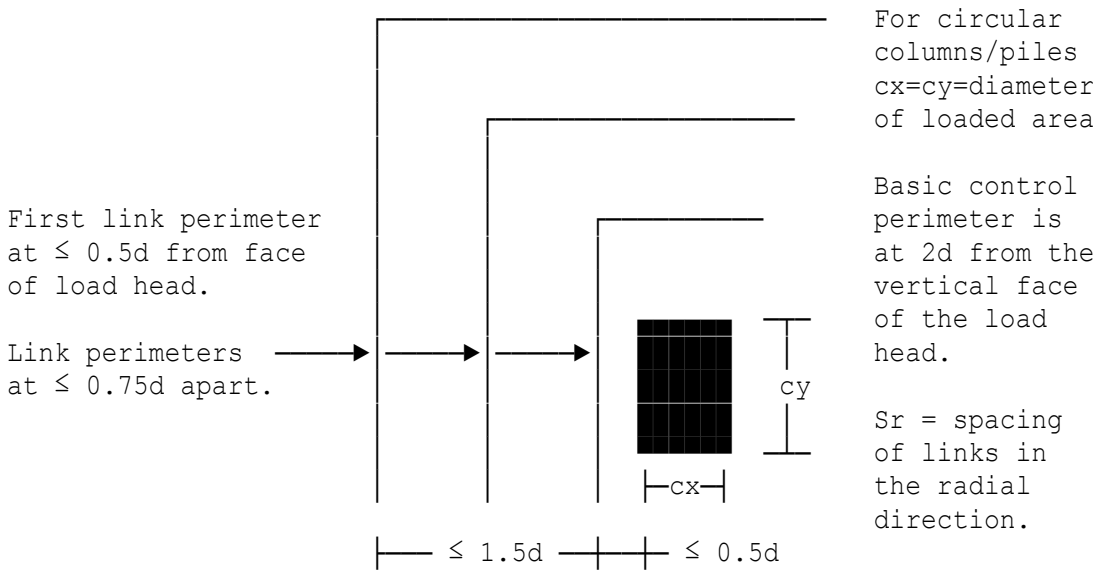

Design applied shear force VEd=1400 kN
Average effective depth d=320 mm
Projection of head from load lH=0 mm
Load head height below slab hH=0 mm
Load dimension (i.e. diameter) c=400 mm

Check shear stress at the load head perimeter

Punching shear force VEd=1400 kN
Shear stress at load head vEd=beta*VEd*1000/(uo*d)=4.0037 N/mm²
Maximum punching shear resistance vRdmax=0.5*v*fcd=5.5808 N/mm²
As vEd ≤ vRdmax, shear stress at load head perimeter is within the maximum punching shear resistance. Hence satisfactory.

Check shear stress at control perimeter u1 at 2d from load head vertical face

Reinforcement ratio in x-dir p1x=0.012
Reinforcement ratio in y-dir p1y=0.012
As vEd > vRdc punching shear reinforcement needs to be provided.

Outer control perimeter where shear links are no longer required

Outer control perimeter Uout=beta*VEd*1000/(d*vRdc)=6949 mm
Radius to Uout rout=(Uout-lcf)/(2*PI)=905.96 mm
The outer perimeter of shear reinforcement required should be placed at a distance not greater than 1.5d from the outer control perimeter Uout. Radius to outer perimeter of shear reinforcement from the load head vertical face is as follows:
Outper=rout-1.5*d=425.96 mm

Shear links on basic control perimeter u1

Spac.inside 2d control perimeter St=450 mm
Spac.outside control perimeter u1 St'=600 mm
Char yield strength of reinft. fyk=500 N/mm²
Diameter of shear reinforcement dial=12 mm
Spacing of links to be used spac=450 mm
Use minimum H 12 (113.1 mm²) legs of links @ 450 mm c/c around perimeter u1 (i.e. in the tangential direction).

Summary of punching shear links

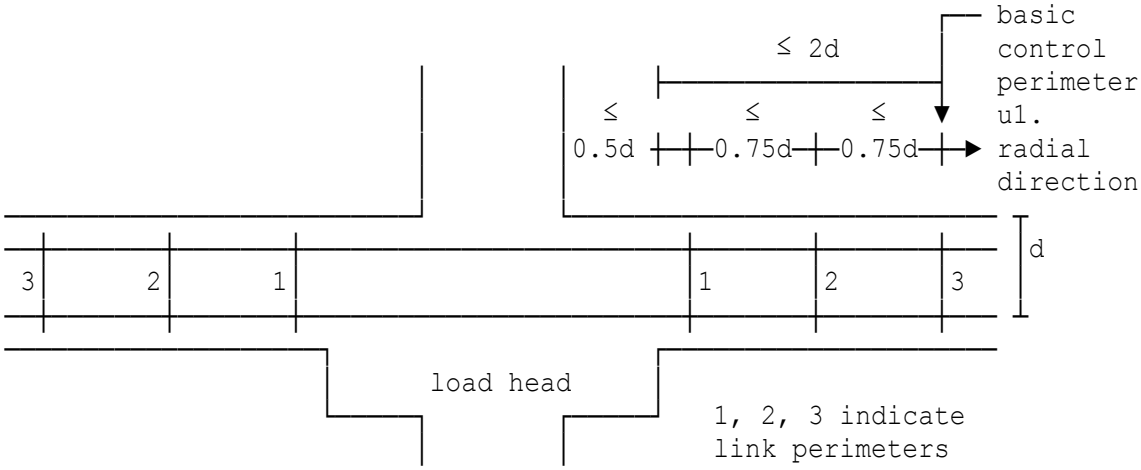

Links on perimeter 1 :
Use minimum H 12 (113.1 mm²) legs of links @ 240 mm c/c in the tangential direction and 240 mm c/c in the radial direction.

Links on perimeter 2 :
Use minimum H 12 (113.1 mm²) legs of links @ 405 mm c/c in the tangential direction and 240 mm c/c in the radial direction.

Links on perimeter 3:
Use minimum H 12 (113.1 mm²) legs of links @ 450 mm c/c in the tangential direction and 240 mm c/c in the radial direction.

Links on perimeters beyond basic control perimeter u1

Location: Ex13 - As Ex1 but with opening near loaded area

Punching shear round concentrated load in accordance with EC2

Calculations are in accordance with Section 6.4 of EC2, Part 1-1.
Partial safety factor (steel) gams=1.15
Partial safety factor (concrete) gamc=1.5

Definitions:
- loaded area refers to the cross-sectional area of the column
- load perimeter refers to the column perimeter
- load face refers to the column face
- face of the load refers to the face of the column
- loaded area dimensions refers to column area dimensions

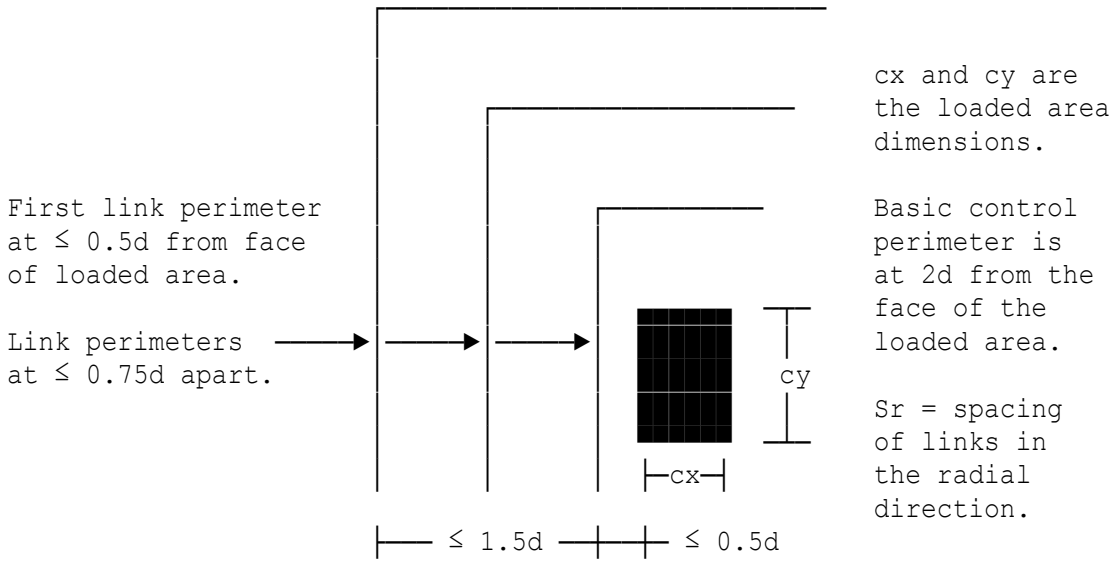

Design applied shear force VEd=2300 kN
Average effective depth d=320 mm
Dimension of loaded area cx=400 mm
Dimension of loaded area cy=550 mm

Check shear stress at the load perimeter

Punching shear force VEd=2300 kN
Shear stress at load perimeter vEd=beta*VEd*1000/(uo*d)=4.3503 N/mm²
Maximum punching shear resistance vRdmax=0.5*v*fcd=5.5808 N/mm²
As vEd ≤ vRdmax, shear stress at load perimeter is within the maximum punching shear resistance. Hence satisfactory.

Ineffective perimeter due to opening

For loaded areas situated near openings the ineffective perimeter needs to be considered in the punching shear calculation (Clause 6.4.2(3)).

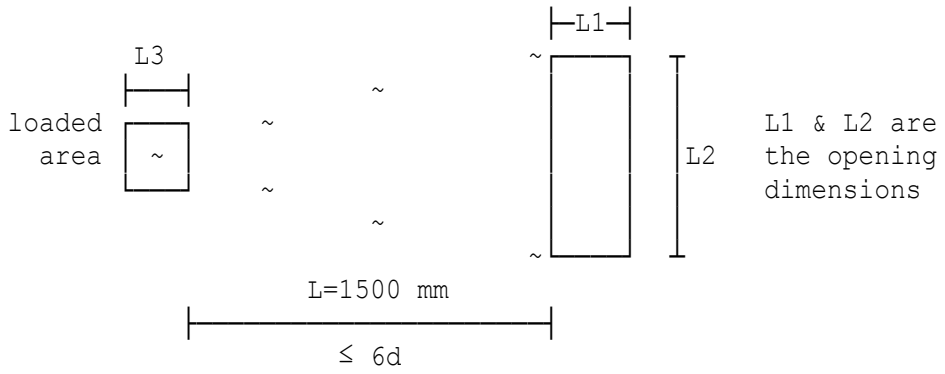

Loaded area dimension L3=400 mm
The part of the control perimeter contained between the two tangents drawn to the outline of the opening from the centre of the loaded area considered to be ineffective is:
Ineffective perimeter ip(3)=(2*d+L3/2)*L2/(L+L3/2)=197.65 mm

Check shear stress at control perimeter u1 at 2d from load face

Reinforcement ratio in x-dir p1x=0.012
Reinforcement ratio in y-dir p1y=0.012
As vEd > vRdc punching shear reinforcement needs to be provided.

Outer control perimeter where shear links are no longer required

Outer control perimeter Uout=beta*VEd*1000/(d*vRdc)=11416 mm
Radius to Uout rout=(Uout-lcf)/(2*PI)=1514.5 mm
The outer perimeter of shear reinforcement should be at a distance not greater than 1.5d from the outer control perimeter Uout. Radius to outer perimeter of shear reinforcement Outper=rout-1.5*d
=1034.5 mm from load face

Shear links on basic control perimeter u1

Spac.inside 2d control perimeter St=450 mm
Spac.outside control perimeter u1 St'=600 mm
Char yield strength of reinft. fyk=500 N/mm²
Diameter of shear reinforcement dial=12 mm
Spacing of links to be used spac=255 mm
Use minimum H 12 (113.1 mm²) legs of links @ 255 mm c/c around perimeter u1 (i.e. in the tangential direction).

Summary of punching shear links

In the following calculation the first perimeter will be taken at 0.5d from the face of the load and subsequent perimeters will be spaced at 0.75d apart.

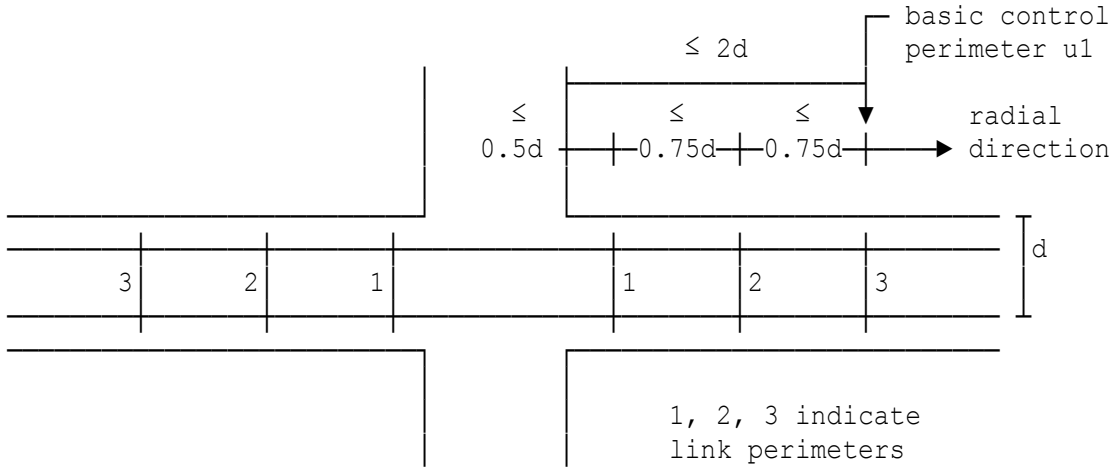

Links on perimeter 1 :
Use minimum H 12 (113.1 mm²) legs of links @ 125 mm c/c in the tangential direction and 240 mm c/c in the radial direction.

Links on perimeter 2 :
Use minimum H 12 (113.1 mm²) legs of links @ 190 mm c/c in the tangential direction and 240 mm c/c in the radial direction.

Links on perimeter 3 :
Use minimum H 12 (113.1 mm²) legs of links @ 255 mm c/c in the tangential direction and 240 mm c/c in the radial direction.

Links on perimeters beyond basic control perimeter u1

Links on perimeter 4 :
Use minimum H 12 (113.1 mm²) legs of links @ 320 mm c/c in the tangential direction and 240 mm c/c in the radial direction.

Links on perimeter 5 :
Use minimum H 12 (113.1 mm²) legs of links @ 390 mm c/c in the tangential direction and 240 mm c/c in the radial direction.

Location: Ex14 - As Ex8 but with opening near loaded area

Punching shear round concentrated load in accordance with EC2

Calculations are in accordance with Section 6.4 of EC2, Part 1-1.
Partial safety factor (steel) gams=1.15
Partial safety factor (concrete) gamc=1.5

Definitions:
- loaded area refers to the cross-sectional area of the column head
- load perimeter refers to the column head perimeter
- load head face refers to the column head face
- face of the load head refers to the face of the column head
- loaded area dimensions refers to column head area dimensions

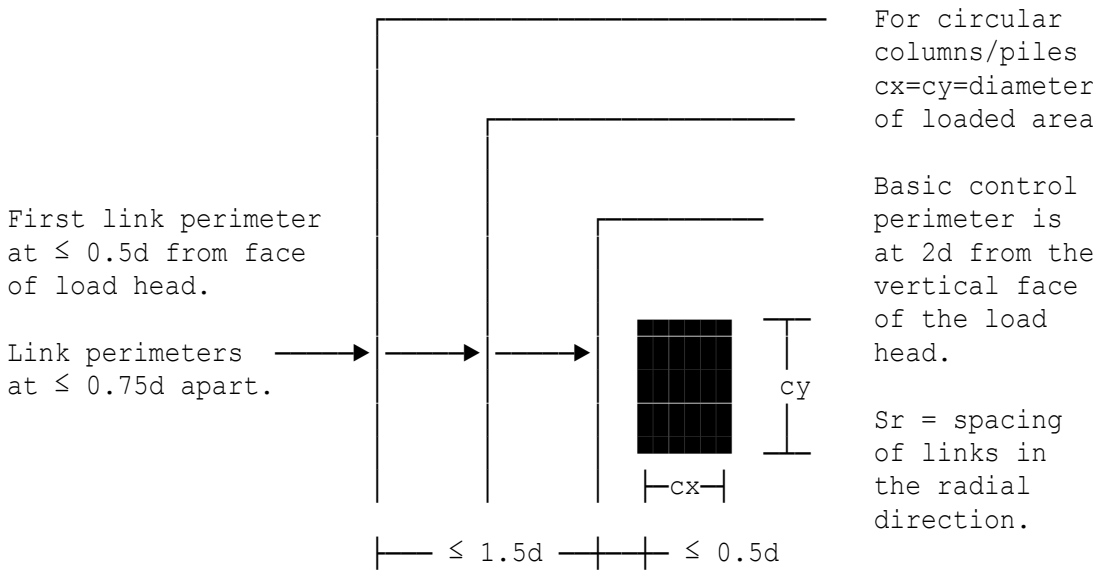

Design applied shear force VEd=2300 kN
Average effective depth d=320 mm
Projection of head from load lH=500 mm
Load head height below slab hH=300 mm
Load dimension (i.e. diameter) c=400 mm

Check shear stress at the load head perimeter

Punching shear force VEd=2300 kN
Shear stress at load head vEd=beta*VEd*1000/(uo*d)=1.8793 N/mm²
Maximum punching shear resistance vRdmax=0.5*v*fcd=5.5808 N/mm²
As vEd ≤ vRdmax, shear stress at load head perimeter is within the maximum punching shear resistance. Hence satisfactory.

Ineffective perimeter due to opening

For loaded areas situated near openings the ineffective perimeter needs to be considered in the punching shear calculation (Clause 6.4.2(3)).

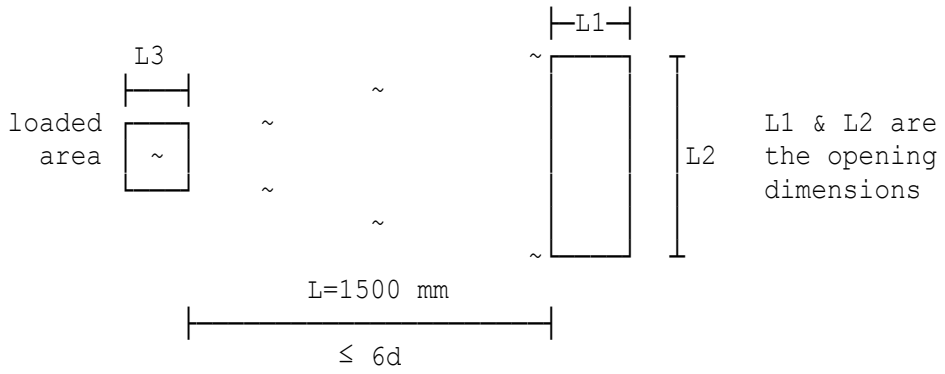

Loaded area dimension L3=1400 mm
The part of the control perimeter contained between the two tangents drawn to the outline of the opening from the centre of the loaded area considered to be ineffective is:
Ineffective perimeter ip(3)=(2*d+L3/2)*L2/(L+L3/2)=487.27 mm

Check shear stress at control perimeter u1 at 2d

from load head vertical face

Reinforcement ratio in x-dir p1x=0.012
Reinforcement ratio in y-dir p1y=0.012
As vEd > vRdc punching shear reinforcement needs to be provided.

Outer control perimeter where shear links are no longer required

Outer control perimeter Uout=beta*VEd*1000/(d*vRdc)=11416 mm
Radius to Uout rout=(Uout-lcf)/(2*PI)=1116.9 mm
The outer perimeter of shear reinforcement required should be placed at a distance not greater than 1.5d from the outer control perimeter Uout.
Radius to outer perimeter of shear reinforcement from the load head vertical face is as follows:
Outper=rout-1.5*d=636.94 mm

Shear links on basic control perimeter u1

Spac.inside 2d control perimeter St=450 mm
Spac.outside control perimeter u1 St'=600 mm
Char yield strength of reinft. fyk=500 N/mm²
Diameter of shear reinforcement dial=12 mm
Spacing of links to be used spac=450 mm
Use minimum H 12 (113.1 mm²) legs of links @ 450 mm c/c around perimeter u1 (i.e. in the tangential direction).

Summary of punching shear links

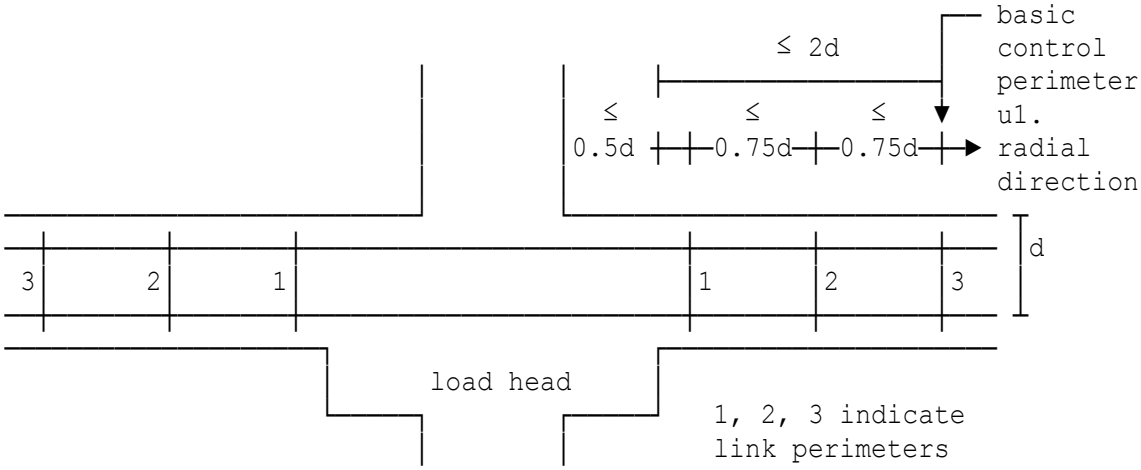

Links on perimeter 1 :
Use minimum H 12 (113.1 mm²) legs of links @ 300 mm c/c in the tangential direction and 240 mm c/c in the radial direction.

Links on perimeter 2 :
Use minimum H 12 (113.1 mm²) legs of links @ 380 mm c/c in the tangential direction and 240 mm c/c in the radial direction.

Links on perimeter 3:
Use minimum H 12 (113.1 mm²) legs of links @ 450 mm c/c in the tangential direction and 240 mm c/c in the radial direction.

Links on perimeters beyond basic control perimeter u1

Load head dimensions - circular

Internal load:

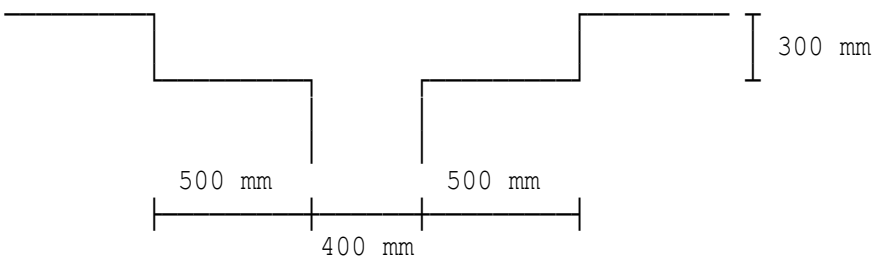

SECTION THROUGH LOAD HEAD

Location: Ex15 - As Ex13 but with edge load

Punching shear round concentrated load in accordance with EC2

Calculations are in accordance with Section 6.4 of EC2, Part 1-1.
Partial safety factor (steel) gams=1.15
Partial safety factor (concrete) gamc=1.5

Definitions:
- loaded area refers to the cross-sectional area of the column
- load perimeter refers to the column perimeter
- load face refers to the column face
- face of the load refers to the face of the column
- loaded area dimensions refers to column area dimensions

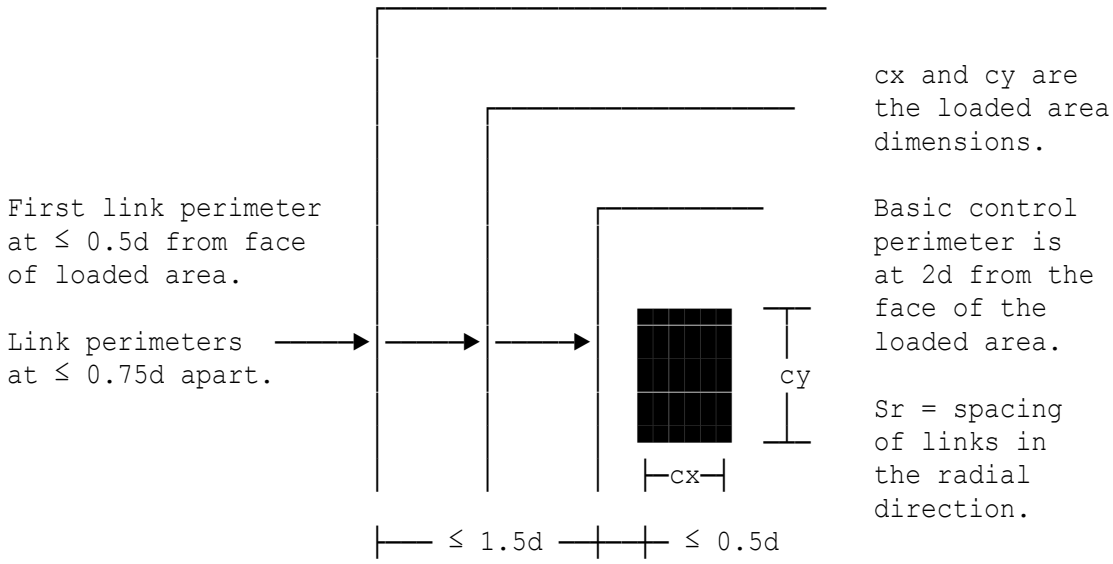

Design applied shear force VEd=1000 kN
Average effective depth d=320 mm
Dimension of loaded area cx=400 mm
Dimension of loaded area cy=550 mm

Check shear stress at the load perimeter

Punching shear force VEd=1000 kN
Load dimension c1=400 mm
Load dimension c2=550 mm
Shear stress at load perimeter vEd=beta*VEd*1000/(uo*d)=3.2407 N/mm²
Maximum punching shear resistance vRdmax=0.5*v*fcd=5.5808 N/mm²
As vEd ≤ vRdmax, shear stress at load perimeter is within the maximum punching shear resistance. Hence satisfactory.

Ineffective perimeter due to opening

For loaded areas situated near openings the ineffective perimeter needs to be considered in the punching shear calculation (Clause 6.4.2(3)).

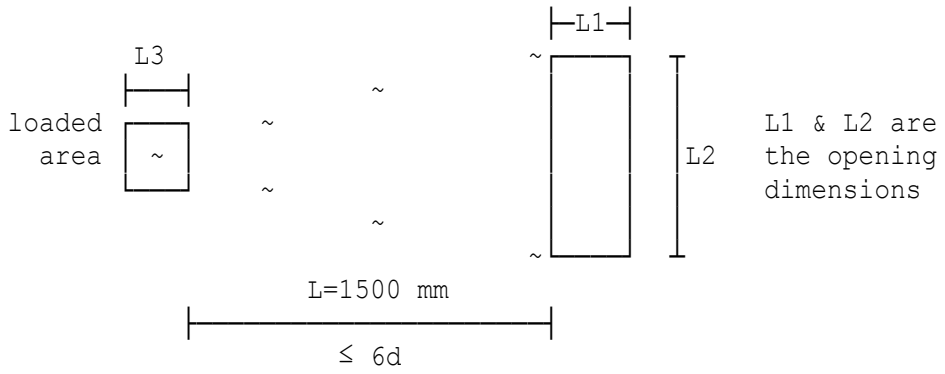

Loaded area dimension L3=400 mm
The part of the control perimeter contained between the two tangents drawn to the outline of the opening from the centre of the loaded area considered to be ineffective is:
Ineffective perimeter ip(3)=(2*d+L3/2)*L2/(L+L3/2)=197.65 mm

Check shear stress at control perimeter u1 at 2d from load face

Reinforcement ratio in x-dir p1x=0.012
Reinforcement ratio in y-dir p1y=0.012
As vEd > vRdc punching shear reinforcement needs to be provided.

Outer control perimeter where shear links are no longer required

Outer control perimeter Uout=beta*VEd*1000/(d*vRdc)=6042.6 mm
Radius to Uout rout=(Uout-lcf)/(PI)=1493.7 mm
The outer perimeter of shear reinforcement should be at a distance not greater than 1.5d from the outer control perimeter Uout. Radius to outer perimeter of shear reinforcement Outper=rout-1.5*d
=1013.7 mm from load face

Shear links on basic control perimeter u1

Spac.inside 2d control perimeter St=450 mm
Spac.outside control perimeter u1 St'=600 mm
Char yield strength of reinft. fyk=500 N/mm²
Diameter of shear reinforcement dial=12 mm
Spacing of links to be used spac=255 mm
Use minimum H 12 (113.1 mm²) legs of links @ 255 mm c/c around perimeter u1 (i.e. in the tangential direction).

Summary of punching shear links

In the following calculation the first perimeter will be taken at 0.5d from the face of the load and subsequent perimeters will be spaced at 0.75d apart.

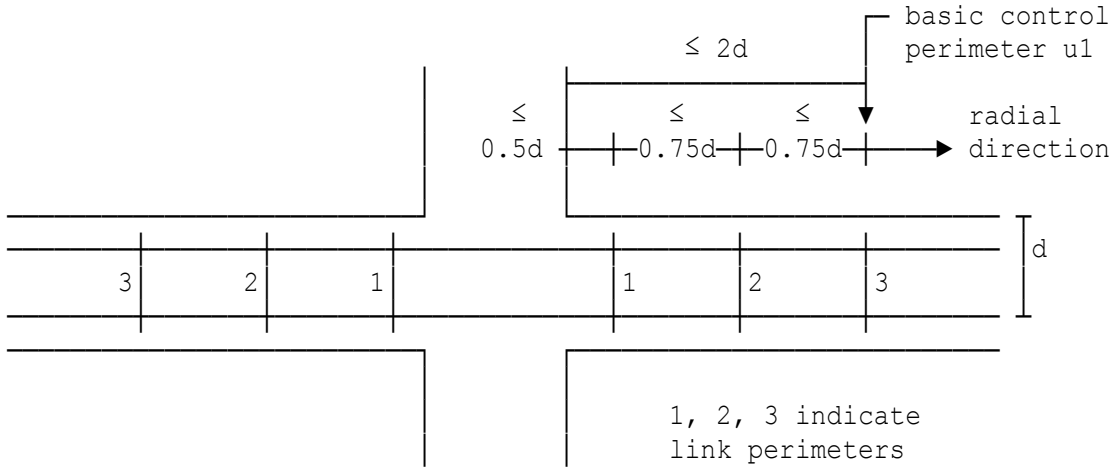

Links on perimeter 1 :
Use minimum H 12 (113.1 mm²) legs of links @ 155 mm c/c in the tangential direction and 240 mm c/c in the radial direction.

Links on perimeter 2 :
Use minimum H 12 (113.1 mm²) legs of links @ 215 mm c/c in the tangential direction and 240 mm c/c in the radial direction.

Links on perimeter 3 :
Use minimum H 12 (113.1 mm²) legs of links @ 255 mm c/c in the tangential direction and 240 mm c/c in the radial direction.

Links on perimeters beyond basic control perimeter u1

Links on perimeter 4 :
Use minimum H 12 (113.1 mm²) legs of links @ 350 mm c/c in the tangential direction and 240 mm c/c in the radial direction.

Links on perimeter 5 :
Use minimum H 12 (113.1 mm²) legs of links @ 410 mm c/c in the tangential direction and 240 mm c/c in the radial direction.

Location: Ex1 - Low moment, high axial load & shear on small section

Design of annular short column to BS8110

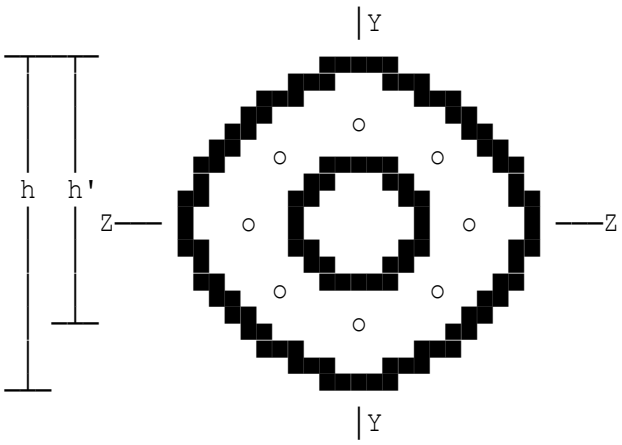

Bars are assumed located at mid-thickness of wall section. Calculations for reinforcement are in accordance with BS8110 and the IStructE/ICE 'Manual for the design of reinforced'. concrete building structures'. Min. steel = six bars arranged symmetrically. Any greater number of bars (eight shown) increases resistance moment of section. Partial safety factor for steel gams=1.15

Design ultimate moment	M=0 kNm
Shear force	F=275 kN
Design ultimate axial load	N=2200 kN
Effective height of column	l=4.5 m
Diameter of cross-section	h=300 mm
Wall thickness	h2=125 mm
Characteristic concrete strength	fcu=40 N/mm²
Characteristic steel strength	fy=500 N/mm²
Characteristic strength of links	fyv=500 N/mm²
Designated exposure class is XC2	
Specified fixing tolerance	tol=10 mm
Main steel diameter	dia=25 mm
Number of bars to be provided	NumBar=7
Chosen diameter of links	Diam=8 mm

Reinforcement summary

VERTICAL	**Characteristic strength**	**500 N/mm²**
REINFORCEMENT	**Number of bars**	**7**
SUMMARY	**Diameter of bars**	**25 mm**
	Area of steel required	**3359.7 mm²**
	Area of steel provided	**3436.1 mm²**
	Percentage provided	**5 %**
	Weight of main bars	**26.974 kg/m**
LINK	**Characteristic strength**	**500 N/mm²**
REINFORCEMENT	**Diameter of links**	**8 mm**
SUMMARY	**Spacing**	**300 mm**
	Weight of links (approx)	**1.2892 kg/m**
	Total weight of steel	**28.263 kg/m**

NOTE: According to BS8110 Clause 3.12.7.3, circular links or spiral reinforcement passing round all bars provide adequate lateral support in circular columns.

Location: Ex2 - High moment and no axial load with mild steel

Design of annular short column to BS8110

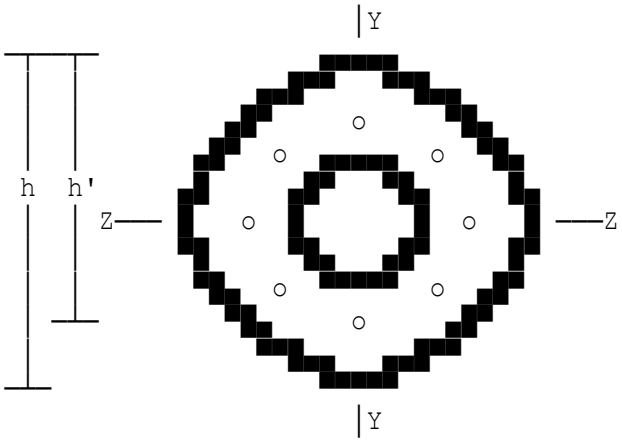

Bars are assumed located at mid-thickness of wall section. Calculations for reinforcement are in accordance with BS8110 and the IStructE/ICE 'Manual for the design of reinforced'. concrete building structures'. Min. steel = six bars arranged symmetrically. Any greater number of bars (eight shown) increases resistance moment of section. Partial safety factor for steel gams=1.15

Design ultimate moment	M=10000 kNm
Shear force	F=500 kN
Design ultimate axial load	N=0 kN
Effective height of column	l=10 m
Diameter of cross-section	h=2000 mm
Wall thickness	h2=325 mm
Characteristic concrete strength	fcu=30 N/mm²
Characteristic steel strength	fy=250 N/mm²
Characteristic strength of links	fyv=500 N/mm²
Designated exposure class is XC2	
Specified fixing tolerance	tol=10 mm
Main steel diameter	dia=40 mm
Number of bars to be provided	NumBar=50
Chosen diameter of links	Diam=10 mm

Reinforcement summary

VERTICAL	**Characteristic strength**	**250 N/mm²**
REINFORCEMENT	**Number of bars**	**50**
SUMMARY	**Diameter of bars**	**40 mm**
	Area of steel required	**62382 mm²**
	Area of steel provided	**62832 mm²**
	Percentage provided	**3.6739 %**
	Weight of main bars	**493.23 kg/m**
LINK	**Characteristic strength**	**500 N/mm²**
REINFORCEMENT	**Diameter of links**	**10 mm**
SUMMARY	**Spacing**	**260 mm**
	Weight of links (approx)	**13.819 kg/m**
	Total weight of steel	**507.05 kg/m**

NOTE: According to BS8110 Clause 3.12.7.3, circular links or spiral reinforcement passing round all bars provide adequate lateral support in circular columns.

Location: Ex3 - Typical jetty piles

Design of annular short column to BS8110

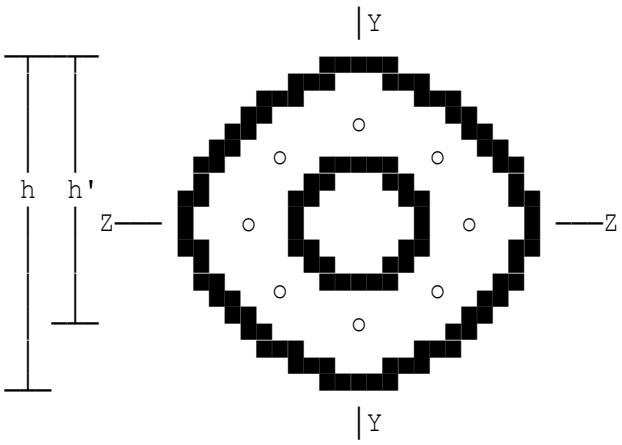

Bars are assumed located at mid-thickness of wall section. Calculations for reinforcement are in accordance with BS8110 and the IStructE/ICE 'Manual for the design of reinforced'. concrete building structures'. Min. steel = six bars arranged symmetrically. Any greater number of bars (eight shown) increases resistance moment of section. Partial safety factor for steel gams=1.15

Design ultimate moment	M=120 kNm
Shear force	F=50 kN
Design ultimate axial load	N=2460 kN
Effective height of column	l=5 m
Diameter of cross-section	h=350 mm
Wall thickness	h2=150 mm
Characteristic concrete strength	fcu=50 N/mm²
Characteristic steel strength	fy=500 N/mm²
Characteristic strength of links	fyv=500 N/mm²
Designated exposure class is XC4	
Specified fixing tolerance	tol=10 mm
Main steel diameter	dia=32 mm
Number of bars to be provided	NumBar=6
Chosen diameter of links	Diam=8 mm

Reinforcement summary

VERTICAL	**Characteristic strength**	**500 N/mm²**
REINFORCEMENT	**Number of bars**	**6**
SUMMARY	**Diameter of bars**	**32 mm**
	Area of steel required	**4464.3 mm²**
	Area of steel provided	**4825.5 mm²**
	Percentage provided	**5.12 %**
	Weight of main bars	**37.88 kg/m**
LINK	**Characteristic strength**	**500 N/mm²**
REINFORCEMENT	**Diameter of links**	**8 mm**
SUMMARY	**Spacing**	**350 mm**
	Weight of links (approx)	**1.2184 kg/m**
	Total weight of steel	**39.098 kg/m**

NOTE: According to BS8110 Clause 3.12.7.3, circular links or spiral reinforcement passing round all bars provide adequate lateral support in circular columns.

Location: Ex1 - Low moment, high axial load & shear on small section

Design of annular short column to EN 1992-1-1

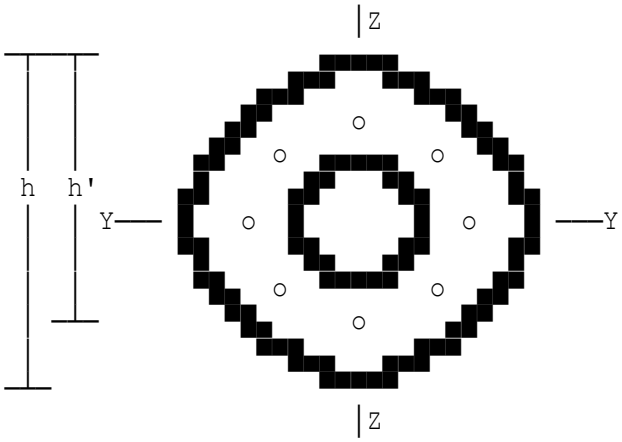

Bars are assumed located at mid-thickness of wall section. Calculations for reinforcement are in accordance with EC2-1-1 and the IStructE/ICE 'Manual for the design of reinforced'. concrete building structures'. Min. steel = six bars arranged symmetrically. Any greater number of bars (eight shown) increases resistance moment of section.

Design ultimate moment	MEd=0 kNm
Shear force	VEd=275 kN
Design ultimate axial load	NEd=2200 kN
Effective height of column	l=4.5 m
Partial safety factor for steel	gams=1.15
Partial safety factor for conc.	gamc=1.5
Diameter of cross-section	h=300 mm
Wall thickness	h2=125 mm
Char yield strength of r'ment	fyk=500 N/mm²
Char yield strength of links	fyk'=500 N/mm²
Diameter of longitudinal r'ment	dia=25 mm
Diameter of column links	dial=8 mm

Slenderness - EC2 Clause 5.8.3.2

About Y-Y axis:
Column is considered to be braced about the stronger axis.
Effective height loy=bety*l*1000=4500 mm
About Z-Z axis:
Column is considered to be braced about the weaker axis.
Effective height loz=betz*l*1000=4500 mm

Check slenderness

For Y-Y stronger axis:
Slenderness lamy=loy/iy=59.184
Smaller initial end moment M1=0 kNm
Limiting slenderness lamly=20*A*B*C/n^0.5=32.565
Column is classified as being slender in accordance with EC2 Part 1-1.

For Z-Z weaker axis:
Slenderness lamz=loz/iz=59.184
Limiting slenderness lamlz=20*A*B*C/n^0.5=32.565
Column is classified as being slender in accordance with EC2 Part 1-1.

Design moments - Clause 5.8.8.2

Imperfections eccentricity	e1=loy/400=11.25 mm
Load NEd eccentricity	e0=h/30=10 mm
Design moment (y-y axis)	MEd=Mo2*10^-6=44 kNm
Main steel diameter	dia=25 mm
Number of bars to be provided	NumBar=6

Shear in column - EN 1992-1-1 Clause 6.2

Shear resistance:
VRdc=(CRdc*ks*vRdc+0.15*NEd*1000/Ac)*bw*d/1000=343.99 kN

SHEAR SUMMARY	**Shear force**	**275 kN**
	Shear resistance	**343.99 kN**

Hence section is satisfactory, no shear reinforcement is required. No calculated reinf'ment is required to resist shear. Provide nominal links passing round all column vertical bars.

Transverse reinforcement (links)

Maximum spacing is the minimum of the following distances:

Based on main bar diameter	smx1=20*dia=500 mm
Minimum column dimension	smx2=h=300 mm
Maximum dimension	smx3=400 mm
Maximum spacing of links	sv=300 mm

This spacing should be reduced by a factor of 0.6 within a distance equal to the larger dimension of the column cross-section above or below a beam or slab.

Reinforcement summary

VERTICAL REINFORCEMENT SUMMARY	**Characteristic strength**	**500 N/mm²**
	Number of bars	**6**
	Diameter of bars	**25 mm**
	Area of steel required	**2919.6 mm²**
	Area of steel provided	**2945.2 mm²**
	Percentage provided	**4.2857 %**
	Weight of main bars	**23.12 kg/m**
LINK REINFORCEMENT SUMMARY	**Characteristic strength**	**500 N/mm²**
	Diameter of links	**8 mm**
	Spacing	**300 mm**
	Weight of links (approx)	**1.2892 kg/m**
	Total weight of steel	**24.409 kg/m**

NOTE 1: Circular links or spiral reinforcement passing round all bars provide adequate lateral support in circular columns.

NOTE 2: The percentage of steel provided is 4.2857 % which is greater than the 4% maximum limit. However this is acceptable provided that the concrete can be placed and compacted sufficiently.

Location: Ex2 - High moment and no axial load with mild steel

Design of annular short column to EN 1992-1-1

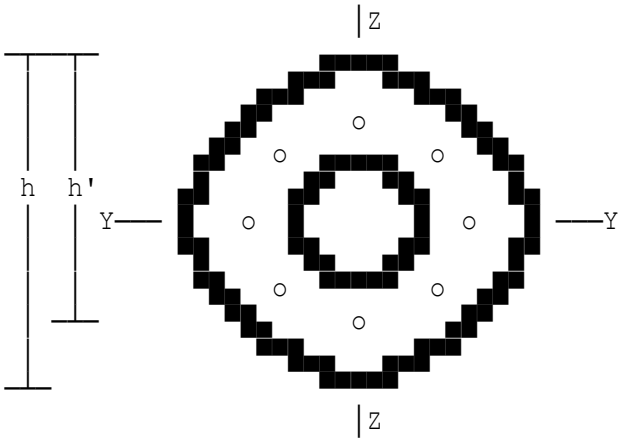

Bars are assumed located at mid-thickness of wall section. Calculations for reinforcement are in accordance with EC2-1-1 and the IStructE/ICE 'Manual for the design of reinforced'. concrete building structures'. Min. steel = six bars arranged symmetrically. Any greater number of bars (eight shown) increases resistance moment of section.

Design ultimate moment	MEd=10000 kNm
Shear force	VEd=500 kN
Design ultimate axial load	NEd=0 kN
Effective height of column	l=10 m
Partial safety factor for steel	gams=1.15
Partial safety factor for conc.	gamc=1.5
Diameter of cross-section	h=2000 mm
Wall thickness	h2=325 mm
Char yield strength of r'ment	fyk=500 N/mm²
Char yield strength of links	fyk'=500 N/mm²
Diameter of longitudinal r'ment	dia=40 mm
Diameter of column links	dial=10 mm

Slenderness - EC2 Clause 5.8.3.2

About Y-Y axis:
Column is considered to be braced about the stronger axis.
Effective height loy=bety*l*1000=7500 mm
About Z-Z axis:
Column is considered to be braced about the weaker axis.
Effective height loz=betz*l*1000=7500 mm

Check slenderness

For Y-Y stronger axis:
Slenderness lamy=loy/iy=12.433
Smaller initial end moment M1=0 kNm
Limiting slenderness lamly=20*A*B*C/n^0.5=13205
Column is classified as being short in accordance with EC2 Part 1-1.

For Z-Z weaker axis:
Slenderness lamz=loz/iz=12.433
Limiting slenderness lamlz=20*A*B*C/n^0.5=13205
Column is classified as being short in accordance with EC2 Part 1-1.

WARNING: Check on validity of the input values

Ratio of reinforcement term	**nu=1.1353**
Relative axial force	**n=4.1275E-6**
Value of n at maximum moment	**nbal=0.4**
Correction factor for axial load	**Kr=(nu-n)/(nu-nbal)**
	=1.544

As this value is high, design the section as a beam.

Location: Ex3 - Typical jetty piles

Design of annular short column to EN 1992-1-1

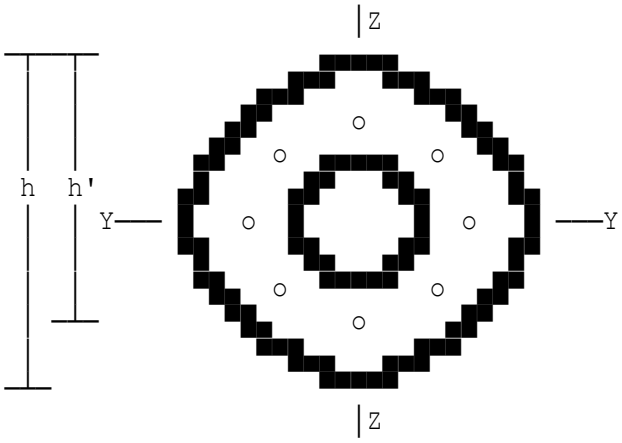

Bars are assumed located at mid-thickness of wall section. Calculations for reinforcement are in accordance with EC2-1-1 and the IStructE/ICE 'Manual for the design of reinforced'. concrete building structures'. Min. steel = six bars arranged symmetrically. Any greater number of bars (eight shown) increases resistance moment of section.

Design ultimate moment	MEd=120 kNm
Shear force	VEd=50 kN
Design ultimate axial load	NEd=2460 kN
Effective height of column	l=5 m
Partial safety factor for steel	gams=1.15
Partial safety factor for conc.	gamc=1.5
Diameter of cross-section	h=350 mm
Wall thickness	h2=150 mm
Char yield strength of r'ment	fyk=500 N/mm²
Char yield strength of links	fyk'=500 N/mm²
Diameter of longitudinal r'ment	dia=32 mm
Diameter of column links	dial=8 mm

Slenderness - EC2 Clause 5.8.3.2

About Y-Y axis:
Column is considered to be braced about the stronger axis.
Effective height loy=bety*l*1000=3750 mm
About Z-Z axis:
Column is considered to be braced about the weaker axis.
Effective height loz=betz*l*1000=3750 mm

Check slenderness

For Y-Y stronger axis:
Slenderness lamy=loy/iy=42.426
Smaller initial end moment M1=0 kNm
Limiting slenderness lamly=20*A*B*C/n^0.5=38.185
Column is classified as being slender in accordance with EC2 Part 1-1.

For Z-Z weaker axis:
Slenderness lamz=loz/iz=42.426
Limiting slenderness lamlz=20*A*B*C/n^0.5=38.185
Column is classified as being slender in accordance with EC2 Part 1-1.

Design moments - Clause 5.8.8.2

Imperfections eccentricity	e1=loy/400=9.375 mm
Load NEd eccentricity	e0=h/30=11.667 mm
Design moment (y-y axis)	MEd=Mo2*10^-6=143.06 kNm
Main steel diameter	dia=32 mm
Number of bars to be provided	NumBar=7

Shear in column - EN 1992-1-1 Clause 6.2

Shear resistance:
VRdc=(CRdc*ks*vRdc+0.15*NEd*1000/Ac)*bw*d/1000=402.04 kN

SHEAR SUMMARY	**Shear force**	**50 kN**
	Shear resistance	**402.04 kN**

Hence section is satisfactory, no shear reinforcement is required. No calculated reinf'ment is required to resist shear. Provide nominal links passing round all column vertical bars.

Transverse reinforcement (links)

Maximum spacing is the minimum of the following distances:

Based on main bar diameter	smx1=20*dia=640 mm
Minimum column dimension	smx2=h=350 mm
Maximum dimension	smx3=400 mm
Maximum spacing of links	sv=350 mm

This spacing should be reduced by a factor of 0.6 within a distance equal to the larger dimension of the column cross-section above or below a beam or slab.

Reinforcement summary

VERTICAL REINFORCEMENT SUMMARY	**Characteristic strength**	**500 N/mm²**
	Number of bars	**7**
	Diameter of bars	**32 mm**
	Area of steel required	**5452.9 mm²**
	Area of steel provided	**5629.7 mm²**
	Percentage provided	**5.9733 %**
	Weight of main bars	**44.193 kg/m**
LINK REINFORCEMENT SUMMARY	**Characteristic strength**	**500 N/mm²**
	Diameter of links	**8 mm**
	Spacing	**350 mm**
	Weight of links (approx)	**1.2184 kg/m**
	Total weight of steel	**45.412 kg/m**

NOTE 1: Circular links or spiral reinforcement passing round all bars provide adequate lateral support in circular columns.

NOTE 2: The percentage of steel provided is 5.9733 % which is greater than the 4% maximum limit. However this is acceptable provided that the concrete can be placed and compacted sufficiently.

Location: Ex4 - As Ex1 but with user defined cover

Design of annular short column to EN 1992-1-1

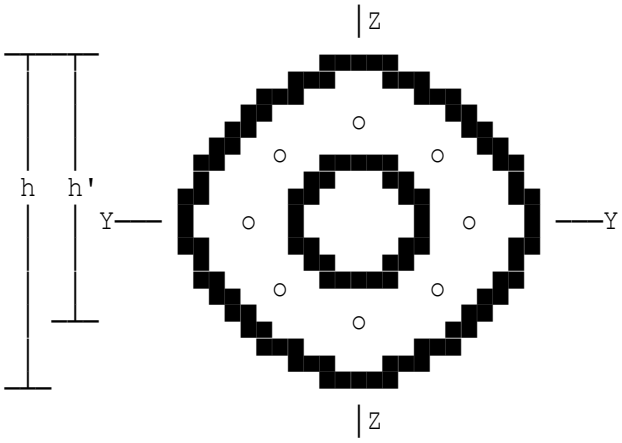

Bars are assumed located at mid-thickness of wall section. Calculations for reinforcement are in accordance with EC2-1-1 and the IStructE/ICE 'Manual for the design of reinforced'. concrete building structures'. Min. steel = six bars arranged symmetrically. Any greater number of bars (eight shown) increases resistance moment of section.

Design ultimate moment	MEd=0 kNm
Shear force	VEd=275 kN
Design ultimate axial load	NEd=2200 kN
Effective height of column	l=4.5 m
Partial safety factor for steel	gams=1.15
Partial safety factor for conc.	gamc=1.5
Diameter of cross-section	h=300 mm
Wall thickness	h2=125 mm
Char yield strength of r'ment	fyk=500 N/mm²
Char yield strength of links	fyk'=500 N/mm²
Diameter of longitudinal r'ment	dia=20 mm
Diameter of column links	dial=8 mm
Nominal cover to all steel	c=25 mm

Slenderness - EC2 Clause 5.8.3.2

About Y-Y axis:
Column is considered to be braced about the stronger axis.
Effective height loy=bety*l*1000=4500 mm
About Z-Z axis:
Column is considered to be braced about the weaker axis.
Effective height loz=betz*l*1000=4500 mm

Check slenderness

For Y-Y stronger axis:
Slenderness lamy=loy/iy=59.184
Smaller initial end moment M1=0 kNm
Limiting slenderness lamly=20*A*B*C/n^0.5=27.256
Column is classified as being slender in accordance with EC2 Part 1-1.

For Z-Z weaker axis:
Slenderness lamz=loz/iz=59.184
Limiting slenderness lamlz=20*A*B*C/n^0.5=27.256
Column is classified as being slender in accordance with EC2 Part 1-1.

WARNING: Check on validity of the input values

Ratio of reinforcement term	**nu=1.6577**
Relative axial force	**n=1.7654**
Value of n at maximum moment	**nbal=0.4**
Correction factor for axial load	**Kr=(nu-n)/(nu-nbal)**
	=-0.085685

Correction factor cannot be less than zero
Revise column cross-section or increase the number of bars assumed for the area of reinforcement

Location: Column A3 (1st-2nd floor)

Short braced rectangular column subjected to biaxial bending and thrust

Design to BS8110(1997) with partial safety factor for steel gammaS=1.15

The calculations for uniaxial or biaxial bending and axial force are in accordance with Clause 3.8.4.5 of BS8110, and are undertaken using data similar to that used to prepare the design charts in the IStructE/ ICE 'Manual for the design of reinforced concrete building structures'

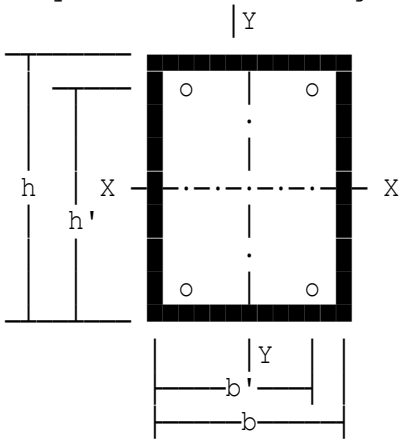

Depth of cross-section	h=600 mm
Width of cross section	b=500 mm
Size of main bars	dia=25 mm
Chosen size of links	dial=10 mm
Characteristic concrete strength	fcu=30 N/mm²
Characteristic steel strength	fy=500 N/mm²
Designated exposure class is XC2	
Specified fixing tolerance	tol=10 mm
Nominal concrete cover	cover=35 mm
Effective depth about X-X axis	h'=542.5 mm
Effective depth about Y-Y axis	b'=442.5 mm
Design ultimate axial load	N=1600 kN
Ultimate moment about X-X axis	Mx=300 kNm
Ultimate moment about Y-Y axis	My=200 kNm
Effective height of column	he=3 m

Normal-weight concrete. Critical slenderness ratio for short braced column is 15 (see Clause 3.8.1.3 of BS8110: Part 1).

Maximum allowable effective height
for braced short column heall=b*factor/1000=7.5 m

Consider bending about X-X axis, as Mx/h' is not less than My/b'

Minimum permissible eccentricity eccmnx=20 mm
As this is less than 0.05*h mm (see Clause 3.8.2.4), adopt this value.
Eccentricity of applied load eccx=1000*Mx/N=187.5 mm
As this exceeds the min.permissible value, design for this eccentricity.

Design of main bars

Actual steel percentage required	p=100*alpha*fcu/fy=0.66514 %
Required area of reinforcement	Asc=p*b*h/100=1995.4 mm²
Number of 25 mm bars required	nmin=2*INT(Asc/area)+2=6
Number of bars provided	nbars=6

MAIN	**Characteristic strength**	**500 N/mm²**
REINFORCEMENT	**Area of steel required**	**1995.4 mm²**
SUMMARY	**Area of steel provided**	**2945.2 mm²**
	Percentage provided	**0.98175 %**
	Weight of steel provided	**23.12 kg/m**
	Diameter of bars	**25 mm**
	Number of bars	**6**

To be placed along b-faces (spaced @ 192 mm, assume 1 layer)

LINK	**Characteristic strength**	**500 N/mm²**
REINFORCEMENT	**Diameter of links**	**10 mm**
SUMMARY	**Max.longitudinal spacing**	**300 mm**
	Approx.weight of links	**8.3844 kg/m**

Clause 3.12.7.2 states that links must pass round every corner bar and each alternate bar, and also that no bar may be more than 150 mm from a bar that is restrained by a link. Thus a set of at least 2 links must be provided at not more than the spacing specified above.

NOTE: As the distance between the bars exceeds 400 mm, a check on cracking may be necessary, if the face is in tension under service loading otherwise use smaller bars, more closely spaced.

Approx.total wt.of steel 31.505 kg/m

Location: Small square column. Max.high-yield steel. High mom & load

Short braced rectangular column subjected to biaxial bending and thrust

Design to BS8110(1997) with partial safety factor for steel gammaS=1.15

The calculations for uniaxial or biaxial bending and axial force are in accordance with Clause 3.8.4.5 of BS8110, and are undertaken using data similar to that used to prepare the design charts in the IStructE/ ICE 'Manual for the design of reinforced concrete building structures'

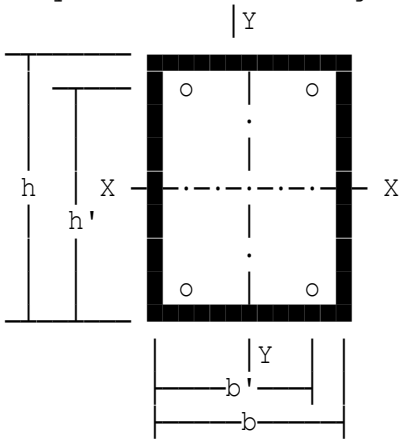

Depth of cross-section	h=200 mm
Width of cross section	b=200 mm
Size of main bars	dia=16 mm
Chosen size of links	dial=8 mm
Characteristic concrete strength	fcu=60 N/mm²
Characteristic steel strength	fy=500 N/mm²
Designated exposure class is XC1	
Specified fixing tolerance	tol=10 mm
Nominal concrete cover	cover=25 mm
Effective depth about X-X axis	h'=159 mm
Effective depth about Y-Y axis	b'=159 mm
Design ultimate axial load	N=400 kN
Ultimate moment about X-X axis	Mx=41 kNm
Ultimate moment about Y-Y axis	My=41 kNm
Effective height of column	he=3 m

Normal-weight concrete. Critical slenderness ratio for short braced column is 15 (see Clause 3.8.1.3 of BS8110: Part 1).

Maximum allowable effective height
for braced short column heall=b*factor/1000=3 m

Consider bending about X-X axis, as Mx/h' is not less than My/b'

Minimum permissible eccentricity eccmnx=h*0.05=10 mm
As this is less than 20 mm (see Clause 3.8.2.4), adopt this value.
Eccentricity of applied load eccx=1000*Mx/N=102.5 mm
As this exceeds the min.permissible value, design for this eccentricity.

Design of main bars

Actual steel percentage required	p=100*alpha*fcu/fy=5.0866 %
Required area of reinforcement	Asc=p*b*h/100=2034.7 mm²
Number of 16 mm bars required	nmin=2*INT(Asc/area)+2=12
Number of bars provided	nbars=12

WARNING:
This exceeds the limit of 6% specified in Cl.3.12.6.2 of BS8110.
Please rerun with modified input.

Location: Large column. Minimum mild steel. Moment and low load.

Short braced rectangular column subjected to biaxial bending and thrust

Design to BS8110(1997) with partial safety factor for steel gammaS=1.15

The calculations for uniaxial or biaxial bending and axial force are in accordance with Clause 3.8.4.5 of BS8110, and are undertaken using data similar to that used to prepare the design charts in the IStructE/ ICE 'Manual for the design of reinforced concrete building structures'

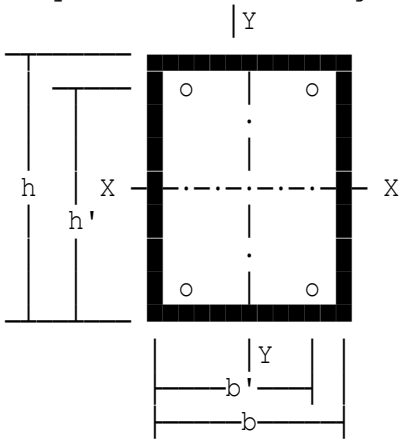

Depth of cross-section	h=2000 mm
Width of cross section	b=1500 mm
Size of main bars	dia=40 mm
Chosen size of links	dial=10 mm
Characteristic concrete strength	fcu=40 N/mm²
Characteristic steel strength	fy=250 N/mm²
Nominal concrete cover	cover=60 mm
Effective depth about X-X axis	h'=1910 mm
Effective depth about Y-Y axis	b'=1410 mm
Design ultimate axial load	N=50 kN
Ultimate moment about X-X axis	Mx=800 kNm
Ultimate moment about Y-Y axis	My=1600 kNm
Effective height of column	he=10 m

Lightweight concrete. Critical slenderness ratio for short braced column is 10 (see Clause 5.7.2 of BS8110: Part 2).

Maximum allowable effective height
for braced short column heall=b*factor/1000=15 m

Consider bending about Y-Y axis, as Mx/h' is less than My/b'

Minimum permissible eccentricity eccmny=20 mm
As this is less than 0.05*b mm (see Clause 3.8.2.4), adopt this value.
Eccentricity of applied load eccy=1000*My/N=32000 mm
As this exceeds the min.permissible value, design for this eccentricity.

As Nratio does not exceed 0.1, the IStructE/ICE design charts do not strictly apply. Clause 3.4.4.1 states that you may, if desired, ignore the axial force and design the section as a beam resisting bending only

Design of main bars

Actual steel percentage required	p=100*alpha*fcu/fy=0.51204 %
Required area of reinforcement	Asc=p*b*h/100=15361 mm²
Number of 40 mm bars required	nmin=2*INT(Asc/area)+2=14
Number of bars provided	nbars=14

MAIN	**Characteristic strength**	**250 N/mm²**
REINFORCEMENT	**Area of steel required**	**15361 mm²**
SUMMARY	**Area of steel provided**	**17593 mm²**
	Percentage provided	**0.58643 %**
	Weight of steel provided	**138.1 kg/m**
	Diameter of bars	**40 mm**
	Number of bars	**14**

To be placed along h-faces (spaced @ 303 mm, assume 1 layer)

LINK	**Characteristic strength**	**250 N/mm²**
REINFORCEMENT	**Diameter of links**	**10 mm**
SUMMARY	**Max.longitudinal spacing**	**480 mm**
	Approx.weight of links	**34.113 kg/m**

Clause 3.12.7.2 states that links must pass round every corner bar and each alternate bar, and also that no bar may be more than 150 mm from a bar that is restrained by a link. Thus a set of at least 4 links must be provided at not more than the spacing specified above.

NOTE: As the distance between the bars exceeds 400 mm, a check on cracking may be necessary, if the face is in tension under service loading otherwise use smaller bars, more closely spaced.

Approx.total wt.of steel 172.22 kg/m

Location: Ex1 - Short rectangular column biaxial bending

Isolated rectangular section subject bending and thrust

Design to EN 1992 -1 -1:2004, Eurocode 2: Design of concrete structures.
The main reinforcement design is based on balancing, by iterative means, of the two derived expressions for areas of reinforcing steel - one for axial load and the other for bending.
One layer of steel is assumed for the axis of bending.

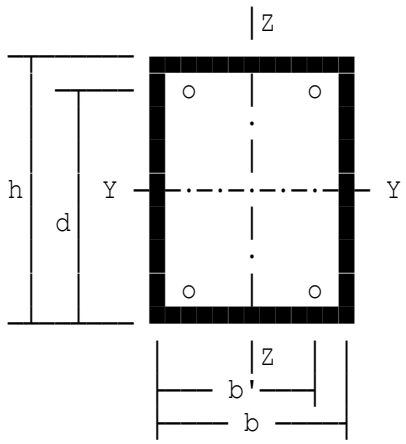

Char yield strength of reinf'ment fyk=500 N/mm²
Max.aggregate size (for bar spc.) hagg=25 mm
Diameter of compression bars dia=25 mm
Diameter of link legs dial=8 mm
Depth to comp. reinforcement d2=56 mm
Clear height between restraints l=3.6 m
Design ultimate axial load N=3620 kN
Larger initial end mt.(y-y axis) M2y=120 kNm
Smaller initial end moment M1y=0 kNm
Larger initial end mt.(z-z axis) M2z=120 kNm
Smaller initial end moment M1z=0 kNm
About Y-Y axis:
Column is considered to be braced about the stronger axis.
Fixity condition at top (1-3) cty=2
Fixity condition at bottom (1-3) cby=2
About Z-Z axis:
Column is considered to be braced about the weaker axis.
Fixity condition at top (1-3) ctz=2
Fixity condition at bottom (1-3) cbz=2

Axial load and moment considerations

Effective/overall-depth ratio d2h=d2/h=0.14
Axial load ratio Nrat=NEd/(b*h*fck)=0.60333
Moment ratio Mrat=MEd/(b*h^2*fck)=0.061539

Longitudinal reinforcement

Chart data for rectangular columns is taken from 'The Concrete Centre' publication entitled 'Worked Examples to Eurocode 2: Volume 1'.

Area of steel required	As=val*fck/fyk*b*h=2818.4 mm²
Number of bars provided	nbars=8

DESIGN SUMMARY

Clear column height	**3.6 m**
Slenderness (Y-Y axis)	**21.2**
Column is short (Y-Y)	
Slenderness (Z-Z axis)	**26.5**
Column is short (Z-Z)	
Design axial load	**3620 kN**
Design bending moments:	
Y-Y axis	**147.69 kNm**
Z-Z axis	**147.69 kNm**
Designed area of steel	**2818.4 mm²**
Area of steel provided	**3927 mm²**
Minimum area of steel	**832.6 mm²**
Maximum area of steel	**8000 mm²**
Link diameter	**8 mm**
Maximum link spacing	**400 mm**
Resistance moment (Y-Y)	**288.94 kNm**
Resistance moment (Z-Z)	**222.04 kNm**
Biaxial bending factor	**0.90113 ≤ 1**

Location: Ex2 - Bending about a single axis

Isolated rectangular section subject bending and thrust

Design to EN 1992 -1 -1:2004,
Eurocode 2: Design of concrete
structures.
The main reinforcement design is
based on balancing, by iterative
means, of the two derived expressions
for areas of reinforcing steel -
one for axial load and the other
for bending.
One layer of steel is assumed for
the axis of bending.

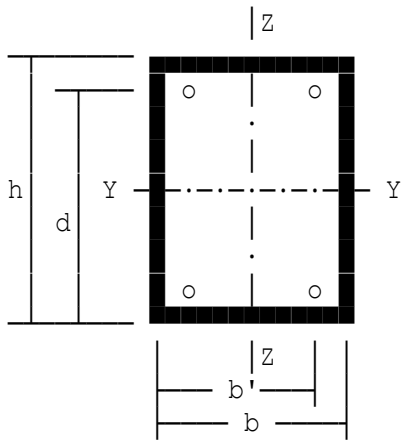

Char yield strength of reinf'ment fyk=500 N/mm²
Max.aggregate size (for bar spc.) hagg=25 mm
Diameter of compression bars dia=32 mm
Diameter of link legs dial=8 mm
Depth to comp. reinforcement d2=70 mm
Clear height between restraints l=5.2 m
Design ultimate axial load N=1650 kN
Larger initial end mt.(positive) M2=100 kNm
Smaller initial end moment M1=0 kNm
About Y-Y axis:
Column is considered to be braced about the stronger axis.
Fixity condition at top (1-3) cty=1
Fixity condition at bottom (1-3) cby=1
About Z-Z axis:
Column is considered to be braced about the weaker axis.
Fixity condition at top (1-3) ctz=3
Fixity condition at bottom (1-3) cbz=3

Axial load and moment considerations

Effective/overall-depth ratio d2h=d2/h=0.2
Axial load ratio Nrat=NEd/(b*h*fck)=0.44898
Moment ratio Mrat=MEd/(b*h^2*fck)=0.090253

Longitudinal reinforcement

Chart data for rectangular columns is taken from 'The Concrete Centre'
publication entitled 'Worked Examples to Eurocode 2: Volume 1'.

Area of steel required As=val*fck/fyk*b*h=1516.7 mm²
Number of bars provided nbars=4

DESIGN SUMMARY		
	Clear column height	**5.2 m**
	Slenderness (Y-Y axis)	**38.6**
	Slenderness (Z-Z axis)	**51.467**
	Column is short	
	Design axial load	**1650 kN**
	Design bending moment	**116.09 kNm**
	Designed area of steel	**1516.7 mm²**
	Area of steel provided	**3217 mm²**
	Minimum area of steel	**379.5 mm²**
	Maximum area of steel	**4900 mm²**
	Link diameter	**8 mm**
	Maximum link spacing	**350 mm**

NOTE: As the column is slender about Z-Z, the weaker axis, biaxial bending is recommended. Repeat calculations taking a small value or zero moment about the weaker axis.

Location: Column D1 (1st to 2nd floor)

Slender rectangular column subjected to uniaxial bending and thrust

Design to BS8110(1997) with partial safety factor for steel gammaS=1.15

Additional moments are calculated in accordance with Clause 3.8.3 of BS8110, and section design is undertaken using data similar to that used to prepare the design charts in the IStructE/ICE 'Manual for the design of reinforced concrete building structures'

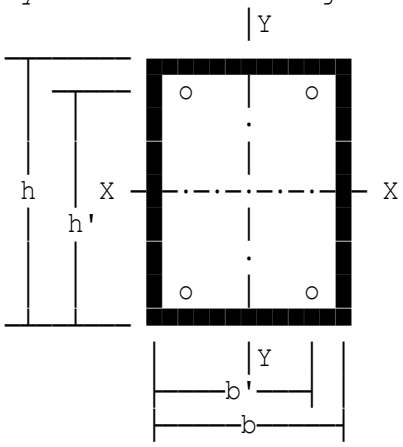

Depth of cross-section	h=500 mm
Width of cross-section	b=300 mm
Size of main bars	dia=25 mm
Chosen size of links	dial=8 mm
Characteristic concrete strength	fcu=30 N/mm²
Characteristic steel strength	fy=500 N/mm²
Designated exposure class is XC2	
Specified fixing tolerance	tol=10 mm
Nominal concrete cover	cover=35 mm
Effective depth about X-X axis	h'=444.5 mm
Effective depth about Y-Y axis	b'=244.5 mm
Clear height between restraints	lo=5.6 m
Design ultimate axial load	N=1000 kN
Larger initial end mt.(positive)	M2=100 kNm
Smaller initial end moment	M1=-60 kNm
About X-X axis:	
Fixity condition at top (1-4)	ctx=1
Fixity condition at bottom (1-3)	cbx=1
and column is unbraced about X-X axis.	
About Y-Y axis:	
Fixity condition at top (1-4)	cty=2
Fixity condition at bottom (1-3)	cby=3
and column is braced about Y-Y axis.	
Area assumed for this calculation	Ase=600 mm²
Design section for	N=1000 kN
and moment about major axis	Mx=178.62 kNm
Number of bars provided	nbars=4

MAIN	**Characteristic strength**	**500 N/mm²**
REINFORCEMENT	**Area of steel required**	**739.58 mm²**
SUMMARY	**Area of steel provided**	**1963.5 mm²**
	Percentage provided	**1.309 %**
	Weight of steel provided	**15.413 kg/m**
	Diameter of bars	**25 mm**
	Number of bars	**4**

LINK	**Characteristic strength**	**500 N/mm²**
REINFORCEMENT	**Diameter of links**	**8 mm**
SUMMARY	**Max.longitudinal spacing**	**300 mm**
	Approx.weight of links	**1.8623 kg/m**
	Approx.total wt.of steel	**17.276 kg/m**

Location: Small column with high moments and maximum reinforcement.

Slender rectangular column subjected to uniaxial bending and thrust

Design to BS8110(1997) with partial safety factor for steel gammaS=1.15

Additional moments are calculated in accordance with Clause 3.8.3 of BS8110, and section design is undertaken using data similar to that used to prepare the design charts in the IStructE/ICE 'Manual for the design of reinforced concrete building structures'

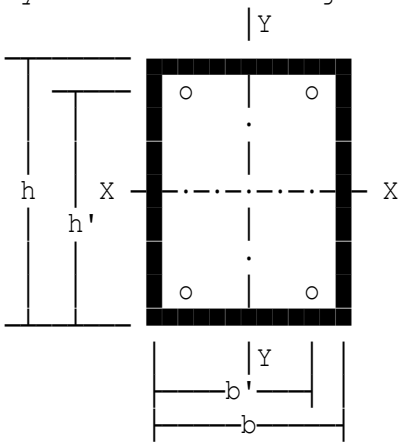

Depth of cross-section	h=200 mm
Width of cross-section	b=200 mm
Size of main bars	dia=16 mm
Chosen size of links	dial=8 mm
Characteristic concrete strength	fcu=60 N/mm²
Characteristic steel strength	fy=500 N/mm²
Designated exposure class is XC1	
Specified fixing tolerance	tol=10 mm
Nominal concrete cover	cover=25 mm
Effective depth about X-X axis	h'=159 mm
Effective depth about Y-Y axis	b'=159 mm
Clear height between restraints	lo=4 m
Design ultimate axial load	N=500 kN
Larger initial end mt.(positive)	M2=70 kNm
Smaller initial end moment	M1=-50 kNm
About X-X axis:	
Fixity condition at top (1-4)	ctx=1
Fixity condition at bottom (1-3)	cbx=1
and column is braced about X-X axis.	
About Y-Y axis:	
Fixity condition at top (1-4)	cty=2
Fixity condition at bottom (1-3)	cby=3
and column is braced about Y-Y axis.	
Area assumed for this calculation	Ase=160 mm²
Design section for	N=500 kN
and moment about minor axis	My=70 kNm
Number of bars provided	nbars=10

MAIN	**Characteristic strength**	**500 N/mm²**
REINFORCEMENT	**Area of steel required**	**1834.3 mm²**
SUMMARY	**Area of steel provided**	**2010.6 mm²**
	Percentage provided	**5.0265 %**
	Weight of steel provided	**15.783 kg/m**
	Diameter of bars	**16 mm**
	Number of bars	**10**

to be placed along h-faces (spaced at 29 mm, assuming 1 layer)
(Spacing is close, hence pairs/bundles or several layers may be required).

LINK	**Characteristic strength**	**500 N/mm²**
REINFORCEMENT	**Diameter of links**	**8 mm**
SUMMARY	**Max.longitudinal spacing**	**190 mm**
	Approx.weight of links	**2.8907 kg/m**

Clause 3.12.7.2 states that links must pass round every corner bar and each alternate bar, and also that no bar may be more than 150 mm from a bar that is restrained by a link. Thus a set of at least 2 links must be provided at not more than the spacing specified above.

Approx.total wt.of steel	**18.674 kg/m**

Location: Large, long column. Mild steel. Axial load predominates.

Slender rectangular column subjected to uniaxial bending and thrust

Design to BS8110(1997) with partial safety factor for steel gammaS=1.15

Additional moments are calculated in accordance with Clause 3.8.3 of BS8110, and section design is undertaken using data similar to that used to prepare the design charts in the IStructE/ICE 'Manual for the design of reinforced concrete building structures'

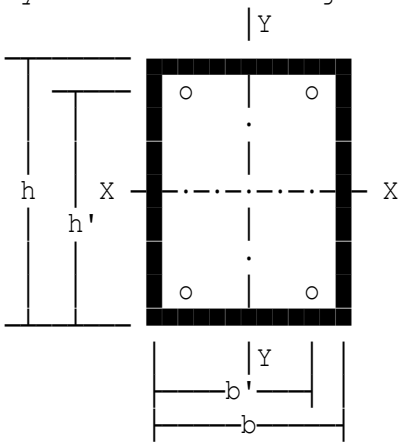

Depth of cross-section	h=2000 mm
Width of cross-section	b=1500 mm
Size of main bars	dia=40 mm
Chosen size of links	dial=10 mm
Characteristic concrete strength	fcu=40 N/mm²
Characteristic steel strength	fy=250 N/mm²
Nominal concrete cover	cover=60 mm
Effective depth about X-X axis	h'=1910 mm
Effective depth about Y-Y axis	b'=1410 mm
Clear height between restraints	lo=25 m
Design ultimate axial load	N=15000 kN
Larger initial end mt.(positive)	M2=2500 kNm
Smaller initial end moment	M1=-1800 kNm

About X-X axis:

Fixity condition at top (1-4)	ctx=3
Fixity condition at bottom (1-3)	cbx=1

and column is unbraced about X-X axis.

About Y-Y axis:

Fixity condition at top (1-4)	cty=3
Fixity condition at bottom (1-3)	cby=2

and column is braced about Y-Y axis.

Area assumed for this calculation	Ase=12000 mm²
Design section for	N=15000 kN
and moment about major axis	Mx=8500 kNm
Number of bars provided	nbars=10

MAIN	**Characteristic strength**	**250 N/mm²**
REINFORCEMENT	**Area of steel required**	**12000 mm²**
SUMMARY	**(represents minimum of 0.4%)**	
	(less theoretically needed.)	
	Area of steel provided	**12566 mm²**
	Percentage provided	**0.41888 %**
	Weight of steel provided	**98.646 kg/m**
	Diameter of bars	**40 mm**
	Number of bars	**10**

to be placed along b-faces (spaced at 330 mm, assuming 1 layer)

LINK	**Characteristic strength**	**250 N/mm²**
REINFORCEMENT	**Diameter of links**	**10 mm**
SUMMARY	**Max.longitudinal spacing**	**480 mm**
	Approx.weight of links	**25.585 kg/m**

Clause 3.12.7.2 states that links must pass round every corner bar and each alternate bar, and also that no bar may be more than 150 mm from a bar that is restrained by a link. Thus a set of at least 3 links must be provided at not more than the spacing specified above.

As the distance between the bars exceeds 400 mm, a check on cracking may be necessary, if the face is in tension under service loading – otherwise use smaller bars, more closely spaced.

Approx.total wt.of steel	**124.23 kg/m**

Location: Ex1 - Slender column uniaxial bending

Isolated rectangular section subject bending and thrust

Design to BS EN 1992-1-1:2004
Eurocode 2: Design of concrete structures.
The main reinforcement design is based on balancing, by iterative means, of the two derived expressions for areas of reinforcing steel - one for axial load and the other for bending.
One layer of steel is assumed for the axis of bending.

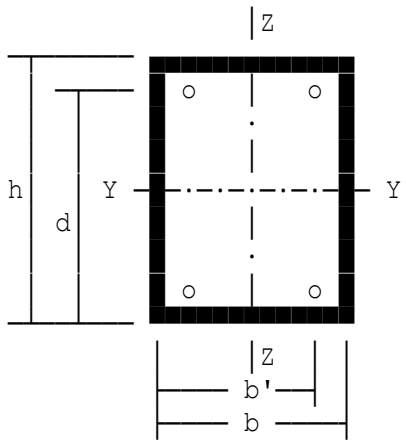

Char yield strength of r'ment	fyk=500 N/mm²
Max.aggregate size (for bar spc.)	hagg=25 mm
Diameter of compression bars	dia=25 mm
Diameter of link legs	dial=8 mm
Depth to comp. reinforcement	d2=61 mm
Clear height between restraints	l=3.6 m
Design ultimate axial load (kN)	NEd'=1620 kN
Larger initial end mt.(positive)	M2=38.5 kNm
Smaller initial end moment	M1=0 kNm

About Y-Y axis:
Column is considered to be braced about the stronger axis.

Fixity condition at top (1-3)	cty=2
Fixity condition at bottom (1-3)	cby=2

About Z-Z axis:
Column is considered to be braced about the weaker axis.

Fixity condition at top (1-3)	ctz=2
Fixity condition at bottom (1-3)	cbz=2

Axial load and moment considerations

Effective/overall-depth ratio	d2h=d2/h=0.20333
Axial load ratio	Nrat=NEd/(b*h*fck)=0.6
Moment ratio	Mrat=MEd/(b*h^2*fck)=0.068765

Longitudinal reinforcement

Chart data for rectangular columns is taken from 'The Concrete Centre' publication entitled 'Worked Examples to Eurocode 2: Volume 1'.

Area of steel required	As=val*fck/fyk*b*h=1485.8 mm²
Number of bars provided	nbars=4

DESIGN SUMMARY

Clear column height	**3.6 m**
Slenderness (Y-Y axis)	**35.334**
Slenderness (Z-Z axis)	**35.334**
Column is slender	
Design axial load	**1620 kN**
Design bending moment	**55.7 kNm**
Designed area of steel	**1485.8 mm²**
Area of steel provided	**1963.5 mm²**
Minimum area of steel	**372.6 mm²**
Maximum area of steel	**3600 mm²**
Link diameter	**8 mm**
Maximum link spacing	**300 mm**

Location: Ex2 - Bending about a single axis

Isolated rectangular section subject bending and thrust

Design to BS EN 1992-1-1:2004
Eurocode 2: Design of concrete structures.
The main reinforcement design is based on balancing, by iterative means, of the two derived expressions for areas of reinforcing steel - one for axial load and the other for bending.
One layer of steel is assumed for the axis of bending.

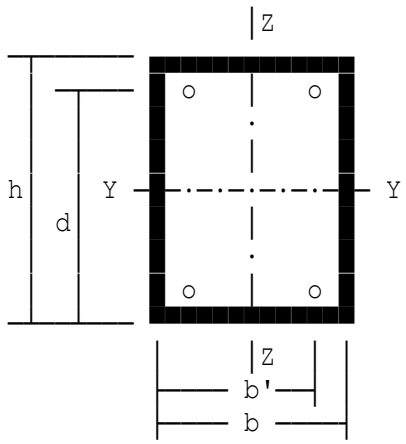

Char yield strength of r'ment	fyk=500 N/mm²
Max.aggregate size (for bar spc.)	hagg=25 mm
Diameter of compression bars	dia=32 mm
Diameter of link legs	dial=8 mm
Depth to comp. reinforcement	d2=70 mm
Clear height between restraints	l=5.2 m
Design ultimate axial load (kN)	NEd'=1650 kN
Larger initial end mt.(positive)	M2=100 kNm
Smaller initial end moment	M1=0 kNm

About Y-Y axis:
Column is considered to be braced about the stronger axis.

Fixity condition at top (1-3)	cty=1
Fixity condition at bottom (1-3)	cby=1

About Z-Z axis:
Column is considered to be braced about the weaker axis.

Fixity condition at top (1-3)	ctz=3
Fixity condition at bottom (1-3)	cbz=3

Axial load and moment considerations

Effective/overall-depth ratio	d2h=d2/h=0.2
Axial load ratio	Nrat=NEd/(b*h*fck)=0.44898
Moment ratio	Mrat=MEd/(b*h^2*fck)=0.090253

Longitudinal reinforcement

Chart data for rectangular columns is taken from 'The Concrete Centre' publication entitled 'Worked Examples to Eurocode 2: Volume 1'.

Area of steel required	As=val*fck/fyk*b*h=1516.7 mm²
Number of bars provided	nbars=4

DESIGN SUMMARY		
	Clear column height	**5.2 m**
	Slenderness (Y-Y axis)	**38.6**
	Slenderness (Z-Z axis)	**51.467**
	Column is short	
	Design axial load	**1650 kN**
	Design bending moment	**116.09 kNm**
	Designed area of steel	**1516.7 mm²**
	Area of steel provided	**3217 mm²**
	Minimum area of steel	**379.5 mm²**
	Maximum area of steel	**4900 mm²**
	Link diameter	**8 mm**
	Maximum link spacing	**350 mm**

NOTE: As the column is slender about Z-Z, the weaker axis, biaxial bending is recommended. Repeat calculations taking a small value or zero moment about the weaker axis.

Location: Column C1 (Ground to 1st floor)

Slender rectangular column subjected to biaxial bending and thrust

Design to BS8110(1997) with partial safety factor for steel gammaS=1.15

Additional moments are calculated in accordance with Clause 3.8.3 of BS8110, and section design is undertaken using data similar to that used to prepare the design charts in the IStructE/ICE 'Manual for the design of reinforced concrete building structures'

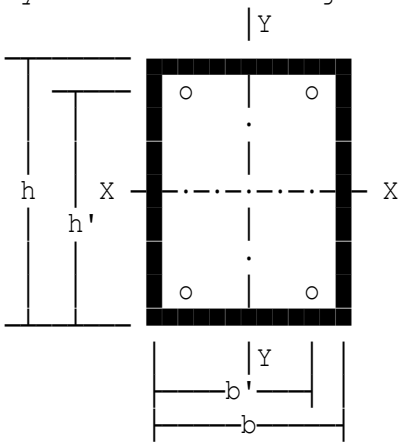

Depth of cross-section	h=500 mm
Width of cross-section	b=300 mm
Size of main bars	dia=25 mm
Chosen size of links	dial=8 mm
Characteristic concrete strength	fcu=30 N/mm²
Characteristic steel strength	fy=500 N/mm²
Designated exposure class is XC2	
Specified fixing tolerance	tol=10 mm
Nominal concrete cover	cover=35 mm
Effective depth about X-X axis	h'=444.5 mm
Effective depth about Y-Y axis	b'=244.5 mm
Clear height between restraints	lo=6 m
Design ultimate axial load	N=1000 kN
Larger initial end mt (positive)	M2x=100 kNm
Smaller initial end moment	M1x=-60 kNm
Larger initial end mt (positive)	M2y=80 kNm
Smaller initial end moment	M1y=-50 kNm
About X-X axis:	
Fixity condition at top (1-4)	ctx=2
Fixity condition at bottom (1-3)	cbx=3
and column is unbraced about X-X axis.	
About Y-Y axis:	
Fixity condition at top (1-4)	cty=1
Fixity condition at bottom (1-3)	cby=1
and column is braced about Y-Y axis.	
Area assumed for this calculation	Ase=600 mm²
minor-axis design moment	My=M2y=80 kNm
major-axis design moment	Mx=M2x+Madd=216.64 kNm

Number of bars provided nbars=6

MAIN	**Characteristic strength**	**500 N/mm²**
REINFORCEMENT	**Area of steel required**	**2446.2 mm²**
SUMMARY	**Area of steel provided**	**2945.2 mm²**
	Percentage provided	**1.9635 %**
	Weight of steel provided	**23.12 kg/m**
	Diameter of bars	**25 mm**
	Number of bars	**6**

To be placed along b-faces (spaced @ 94 mm, assume 1 layer)

LINK	**Characteristic strength**	**500 N/mm²**
REINFORCEMENT	**Diameter of links**	**8 mm**
SUMMARY	**Max.longitudinal spacing**	**300 mm**
	Approx.weight of links	**1.8623 kg/m**
	Approx.total wt.of steel	**24.982 kg/m**

Location: Small column with high moments and maximum reinforcement.

Slender rectangular column subjected to biaxial bending and thrust

Design to BS8110(1997) with partial safety factor for steel gammaS=1.15

Additional moments are calculated in accordance with Clause 3.8.3 of BS8110, and section design is undertaken using data similar to that used to prepare the design charts in the IStructE/ICE 'Manual for the design of reinforced concrete building structures'

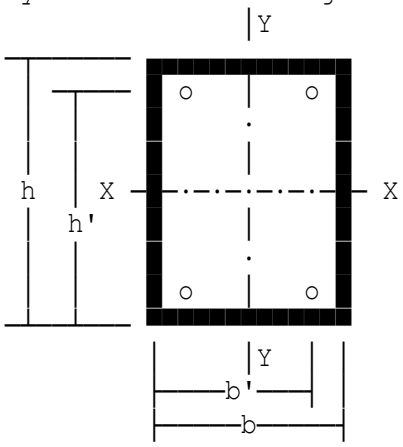

Depth of cross-section	h=200 mm
Width of cross-section	b=200 mm
Size of main bars	dia=16 mm
Chosen size of links	dial=8 mm
Characteristic concrete strength	fcu=60 N/mm²
Characteristic steel strength	fy=500 N/mm²
Designated exposure class is XC1	
Specified fixing tolerance	tol=10 mm
Nominal concrete cover	cover=25 mm
Effective depth about X-X axis	h'=159 mm
Effective depth about Y-Y axis	b'=159 mm
Clear height between restraints	lo=4 m
Design ultimate axial load	N=500 kN
Larger initial end mt (positive)	M2x=40 kNm
Smaller initial end moment	M1x=-20 kNm
Larger initial end mt (positive)	M2y=40 kNm
Smaller initial end moment	M1y=-20 kNm
About X-X axis:	
Fixity condition at top (1-4)	ctx=1
Fixity condition at bottom (1-3)	cbx=2
and column is braced about X-X axis.	
About Y-Y axis:	
Fixity condition at top (1-4)	cty=1
Fixity condition at bottom (1-3)	cby=2
and column is braced about Y-Y axis.	
Area assumed for this calculation	Ase=160 mm²
minor-axis design moment	My=M2y=40 kNm
major-axis design moment	Mx=M2x=40 kNm

Number of bars provided nbars=10

MAIN	**Characteristic strength**	**500 N/mm²**
REINFORCEMENT	**Area of steel required**	**1850.9 mm²**
SUMMARY	**Area of steel provided**	**2010.6 mm²**
	Percentage provided	**5.0265 %**
	Weight of steel provided	**15.783 kg/m**
	Diameter of bars	**16 mm**
	Number of bars	**10**

To be placed along b-faces (spaced @ 29 mm, assume 1 layer)
Spacing is close, so pairs/bundles or several layers may be needed

LINK	**Characteristic strength**	**500 N/mm²**
REINFORCEMENT	**Diameter of links**	**8 mm**
SUMMARY	**Max.longitudinal spacing**	**190 mm**
	Approx.weight of links	**2.8907 kg/m**

Clause 3.12.7.2 states that links must pass round every corner bar and each alternate bar, and also that no bar may be more than 150 mm from a bar that is restrained by a link. Thus a set of at least 2 links must be provided at not more than the spacing specified above.

Approx.total wt.of steel 18.674 kg/m

Location: Large, long column. Mild steel. Axial load predominates.

Slender rectangular column subjected to biaxial bending and thrust

Design to BS8110(1997) with partial safety factor for steel gammaS=1.15

Additional moments are calculated in accordance with Clause 3.8.3 of BS8110, and section design is undertaken using data similar to that used to prepare the design charts in the IStructE/ICE 'Manual for the design of reinforced concrete building structures'

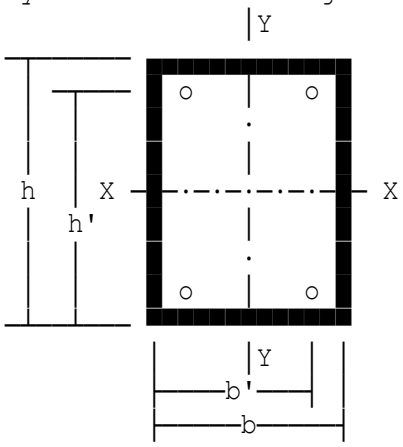

Depth of cross-section	h=2000 mm
Width of cross-section	b=1500 mm
Size of main bars	dia=40 mm
Chosen size of links	dial=10 mm
Characteristic concrete strength	fcu=40 N/mm²
Characteristic steel strength	fy=250 N/mm²
Nominal concrete cover	cover=60 mm
Effective depth about X-X axis	h'=1910 mm
Effective depth about Y-Y axis	b'=1410 mm
Clear height between restraints	lo=40 m
Design ultimate axial load	N=15000 kN
Larger initial end mt (positive)	M2x=2500 kNm
Smaller initial end moment	M1x=-1800 kNm
Larger initial end mt (positive)	M2y=2000 kNm
Smaller initial end moment	M1y=-1400 kNm

About X-X axis:

Fixity condition at top (1-4)	ctx=3
Fixity condition at bottom (1-3)	cbx=1

and column is unbraced about X-X axis.

About Y-Y axis:

Fixity condition at top (1-4)	cty=3
Fixity condition at bottom (1-3)	cby=2

and column is braced about Y-Y axis.

Area assumed for this calculation	Ase=12000 mm²
minor-axis design moment	My=M'b'=8020 kNm
major-axis design moment	Mx=M2x+Madd=17860 kNm

Number of bars provided nbars=68

MAIN	**Characteristic strength**	**250 N/mm²**
REINFORCEMENT	**Area of steel required**	**84363 mm²**
SUMMARY	**Area of steel provided**	**85451 mm²**
	Percentage provided	**2.8484 %**
	Weight of steel provided	**670.79 kg/m**
	Diameter of bars	**40 mm**
	Number of bars	**68**

To be placed along b-faces (spaced @ 40 mm, assume 1 layer)
Spacing is close, so pairs/bundles or several layers may be needed

LINK	**Characteristic strength**	**250 N/mm²**
REINFORCEMENT	**Diameter of links**	**10 mm**
SUMMARY	**Max.longitudinal spacing**	**480 mm**
	Approx.weight of links	**76.754 kg/m**

Clause 3.12.7.2 states that links must pass round every corner bar and each alternate bar, and also that no bar may be more than 150 mm from a bar that is restrained by a link. Thus a set of at least 9 links must be provided at not more than the spacing specified above.

As the distance between the bars exceeds 400 mm, check on cracking may be necessary, if the face is in tension under service loading - otherwise use smaller bars, more closely spaced.

Approx.total wt.of steel 747.55 kg/m

Location: Ex1 - Biaxial bending example

Isolated rectangular section subject bending and thrust

Design to EN 1992 -1 -1:2004,
Eurocode 2: Design of concrete
structures.
The main reinforcement design is
based on balancing, by iterative
means, of the two derived expressions
for areas of reinforcing steel -
one for axial load and the other
for bending.
One layer of steel is assumed for
the axis of bending.

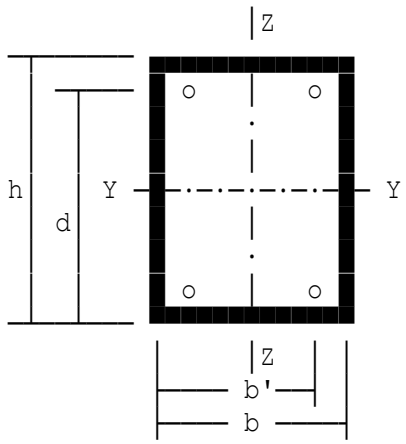

Char yield strength of reinft.	fyk=500 N/mm²
Max.aggregate size (for bar spc.)	hagg=25 mm
Diameter of compression bars	dia=32 mm
Diameter of link legs	dial=8 mm
Depth to comp. reinforcement	d2=69 mm
Clear height between restraints	l=3.2 m
Design ultimate axial load	N=1650 kN
Larger initial end mt.(y-y axis)	M2y=146.1 kNm
Smaller initial end moment	M1y=0 kNm
Larger initial end mt.(z-z axis)	M2z=114.5 kNm
Smaller initial end moment	M1z=0 kNm

About Y-Y axis:
Column is considered to be braced.
About Z-Z axis:
Column is considered to be braced.

Axial load and moment considerations

Effective/overall-depth ratio	d2h=d2/h=0.19714
Axial load ratio	Nrat=NEd/(b*h*fck)=0.44898
Moment ratio	Mrat=MEd/(b*h^2*fck)=0.12231

Longitudinal reinforcement

Chart data for rectangular columns is taken from 'The Concrete Centre'
publication entitled 'Worked Examples to Eurocode 2: Volume 1'.

Area of steel required	As=val*fck/fyk*b*h=2642.9 mm²
Number of bars provided	nbars=8

Copyright 1986-2024 Fitzroy Systems Ltd.

DESIGN SUMMARY

Clear column height	**3.2 m**
Slenderness (Y-Y axis)	**26.921**
Column is short (Y-Y)	
Slenderness (Z-Z axis)	**26.921**
Column is short (Z-Z)	
Design axial load	**1650 kN**
Design bending moments:	
Y-Y axis	**157.32 kNm**
Z-Z axis	**125.72 kNm**
Designed area of steel	**2642.9 mm²**
Area of steel provided	**6434 mm²**
Minimum area of steel	**379.5 mm²**
Maximum area of steel	**4900 mm²**
Link diameter	**8 mm**
Maximum link spacing	**350 mm**
Resistance moment (Y-Y)	**318.89 kNm**
Resistance moment (Z-Z)	**318.89 kNm**
Biaxial bending factor	**0.75655**

NOTE: Designed steel exceeds 4% of gross area. However the maximum area can be increased provided that the concrete can be placed and compacted sufficiently.

Location: Ex2 - Bending about a single axis

Isolated rectangular section subject bending and thrust

Design to EN 1992 -1 -1:2004,
Eurocode 2: Design of concrete
structures.
The main reinforcement design is
based on balancing, by iterative
means, of the two derived expressions
for areas of reinforcing steel -
one for axial load and the other
for bending.
One layer of steel is assumed for
the axis of bending.

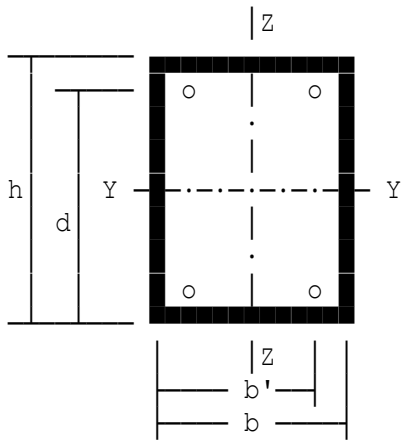

Char yield strength of reinft.	fyk=500 N/mm²
Max.aggregate size (for bar spc.)	hagg=25 mm
Diameter of compression bars	dia=32 mm
Diameter of link legs	dial=8 mm
Depth to comp. reinforcement	d2=69 mm
Clear height between restraints	l=5.2 m
Design ultimate axial load	N=1650 kN
Larger initial end mt.(positive)	M2=100 kNm
Smaller initial end moment	M1=0 kNm

About Y-Y axis:
Column is considered to be braced.
About Z-Z axis:
Column is considered to be braced.

Axial load and moment considerations

Effective/overall-depth ratio	d2h=d2/h=0.19714
Axial load ratio	Nrat=NEd/(b*h*fck)=0.44898
Moment ratio	Mrat=MEd/(b*h^2*fck)=0.090253

Longitudinal reinforcement

Chart data for rectangular columns is taken from 'The Concrete Centre'
publication entitled 'Worked Examples to Eurocode 2: Volume 1'.

Area of steel required	As=val*fck/fyk*b*h=1507 mm²
Number of bars provided	nbars=4

DESIGN SUMMARY

Clear column height	**5.2 m**
Slenderness (Y-Y axis)	**38.6**
Slenderness (Z-Z axis)	**51.467**
Column is short	
Design axial load	**1650 kN**
Design bending moment	**116.09 kNm**
Designed area of steel	**1507 mm²**
Area of steel provided	**3217 mm²**
Minimum area of steel	**379.5 mm²**
Maximum area of steel	**4900 mm²**
Link diameter	**8 mm**
Maximum link spacing	**350 mm**

NOTE: As the column is slender about Z-Z, the weaker axis, biaxial bending is recommended. Repeat calculations taking a small value or zero moment about the weaker axis.

Location: Small column. High-yield steel. High mom. Low axial load.

Design of circular section under bending and axial load

Design to BS8110(1997), partial safety factor for steel gammaS=1.15

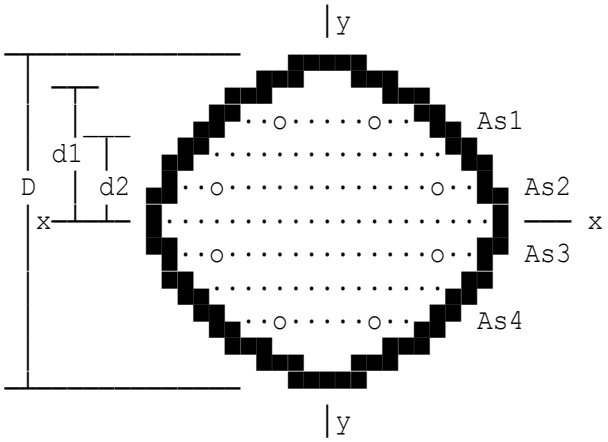

Calculations for reinforcement are in accordance with BS 8110 Solution is obtained by trial-and-adjustment procedure with check calculations printed out beneath. The concrete section is split into eight strips of equal depth. Eight steel bars arranged as shown are assumed, giving four steel areas.

Design axial load	N=1 kN
Design moment	M=128 kNm
Section diameter	D=300 mm
Size of links	dial=8 mm
Characteristic concrete strength	fcu=50 N/mm²
Characteristic steel strength	fy=500 N/mm²
Nominal cover to all steel	c=25 mm

SUMMARY (fcu=50 N/mm² : fy=500 N/mm²)

(Note: 'microstrain' indicates true strain multiplied by 1,000,000.)

Diameter of section	**300 mm**
Cover to all reinforcement	**25 mm**
Size of main bars	**12 mm**
Number of main bars	**30**
Area of steel provided	**3392.9 mm²**
Percentage of steel provided	**4.8 %**
Size of links provided	**8 mm**
Comp.strain at outer conc.fibre	**3500 microstrain**
Comp.strain at steel area As1	**2055.4 microstrain**
Tensile strain at steel area As4	**4189.1 microstrain**
Depth of concrete in compression	**114.96 mm**

	Specified	**Calculated**	**Excess (%)**	
Axial load in kN	**1**	**108.86**	**10786**	**Satisfactory**
Resistance moment in kNm	**128**	**131.81**	**2.9**	**Satisfactory**

The above result is judged acceptable.

Location: Large column. Mild steel. Low moment. High axial load.

Design of circular section under bending and axial load

Design to BS8110(1997), partial safety factor for steel gammaS=1.15

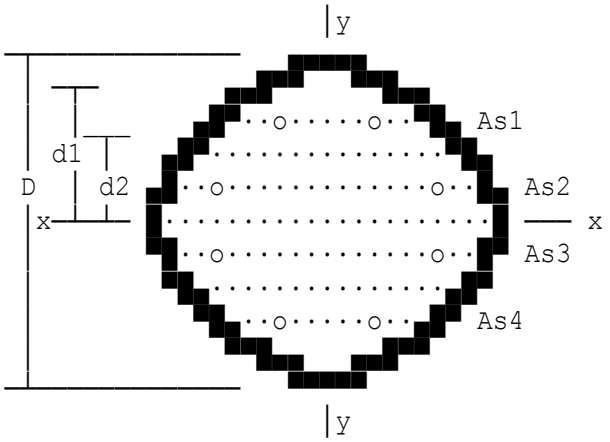

Calculations for reinforcement are in accordance with BS 8110 Solution is obtained by trial-and-adjustment procedure with check calculations printed out beneath. The concrete section is split into eight strips of equal depth. Eight steel bars arranged as shown are assumed, giving four steel areas.

Design axial load	N=10000 kN
Design moment	M=100 kNm
Section diameter	D=1500 mm
Size of links	dial=10 mm
Characteristic concrete strength	fcu=35 N/mm²
Characteristic steel strength	fy=250 N/mm²
Nominal cover to all steel	c=25 mm

SUMMARY (fcu=35 N/mm² : fy=250 N/mm²)

(Note: 'microstrain' indicates true strain multiplied by 1,000,000.)

Diameter of section	**1500 mm**
Cover to all reinforcement	**25 mm**
Size of main bars	**12 mm**
Number of main bars	**64**
Area of steel provided	**7238.2 mm²**
Percentage of steel provided	**0.4096 %**
Size of links provided	**10 mm**
Comp.strain at outer conc.fibre	**3500 microstrain**
Comp.strain at steel area As1	**3300.2 microstrain**
Comp.strain at steel area As4	**544.51 microstrain**
Depth of concrete in compression	**1500 mm**

	Specified	Calculated	Excess (%)
Axial load in kN	**10000**	**28100**	**180.9**
Satisfactory			
Resistance moment in kNm	**200**	**572.84**	**186.4**
Satisfactory			

Section reinforced with the minimum permissible steel area of 0.4% can support the specified loading shown, and is accepted as the design.

Location: Medium-sized column (High-yield steel,Moderate mom,Low ld)

Design of circular section under bending and axial load

Design to BS8110(1997), partial safety factor for steel gammaS=1.15

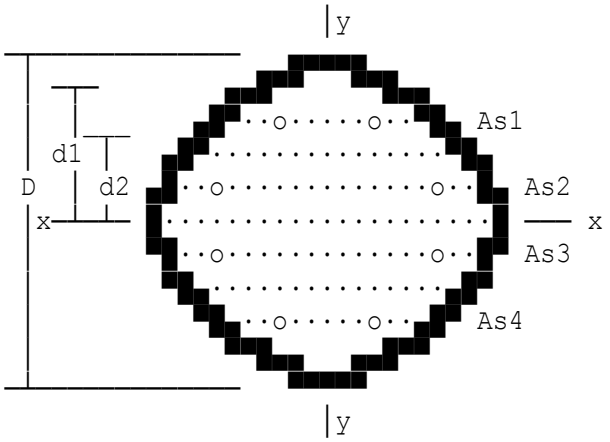

Calculations for reinforcement are in accordance with BS 8110 Solution is obtained by trial-and-adjustment procedure with check calculations printed out beneath. The concrete section is split into eight strips of equal depth. Eight steel bars arranged as shown are assumed, giving four steel areas.

Design axial load	N=10 kN
Design moment	M=300 kNm
Section diameter	D=450 mm
Size of links	dial=8 mm
Characteristic concrete strength	fcu=40 N/mm²
Characteristic steel strength	fy=500 N/mm²
Nominal cover to all steel	c=25 mm

SUMMARY (fcu=40 N/mm² : fy=500 N/mm²)

(Note: 'microstrain' indicates true strain multiplied by 1,000,000.)

Diameter of section	**450 mm**
Cover to all reinforcement	**25 mm**
Size of main bars	**12 mm**
Number of main bars	**40**
Area of steel provided	**4523.9 mm²**
Percentage of steel provided	**2.8444 %**
Size of links provided	**8 mm**
Comp.strain at outer conc.fibre	**3500 microstrain**
Comp.strain at steel area As1	**2253.2 microstrain**
Tensile strain at steel area As4	**5808 microstrain**
Depth of concrete in compression	**149.22 mm**

	Specified	**Calculated**	**Excess (%)**	
Axial load in kN	**10**	**177.72**	**1677.2**	**Satisfactory**
Resistance moment in kNm	**300**	**301.56**	**0.5**	**Satisfactory**

The above result is judged acceptable.

Location: Medium-sized column. Mild steel. High mom. Moderate load.

Design of circular section under bending and axial load

Design to BS8110(1997), partial safety factor for steel gammaS=1.15

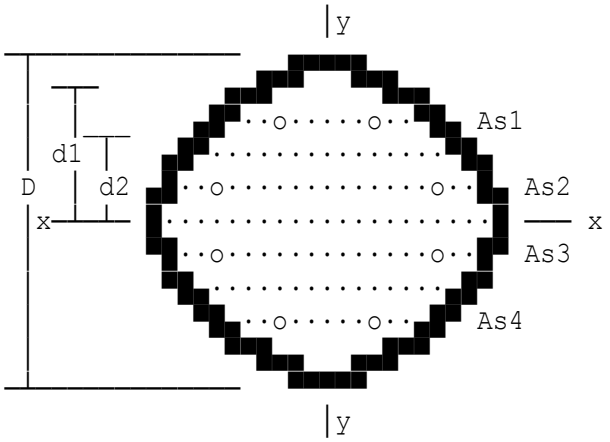

Calculations for reinforcement are in accordance with BS 8110 Solution is obtained by trial-and-adjustment procedure with check calculations printed out beneath. The concrete section is split into eight strips of equal depth. Eight steel bars arranged as shown are assumed, giving four steel areas.

Design axial load	N=500 kN
Design moment	M=420 kNm
Section diameter	D=500 mm
Size of links	dial=8 mm
Characteristic concrete strength	fcu=40 N/mm²
Characteristic steel strength	fy=250 N/mm²
Nominal cover to all steel	c=25 mm

SUMMARY (fcu=40 N/mm² : fy=250 N/mm²)

(Note: 'microstrain' indicates true strain multiplied by 1,000,000.)

Diameter of section	**500 mm**
Cover to all reinforcement	**25 mm**
Size of main bars	**12 mm**
Number of main bars	**90**
Area of steel provided	**10179 mm²**
Percentage of steel provided	**5.184 %**
Size of links provided	**8 mm**
Comp.strain at outer conc.fibre	**3500 microstrain**
Comp.strain at steel area As1	**2468.4 microstrain**
Tensile strain at steel area As4	**4836.3 microstrain**
Depth of concrete in compression	**186.81 mm**

	Specified	**Calculated**	**Excess (%)**	
Axial load in kN	**500**	**622.03**	**24.4**	**Satisfactory**
Resistance moment in kNm	**420**	**424.4**	**1**	**Satisfactory**

The above result is judged acceptable.

Location: Small column (High-yield steel, High mom, Low axial load)

Design of circular section under bending and axial load to EC2

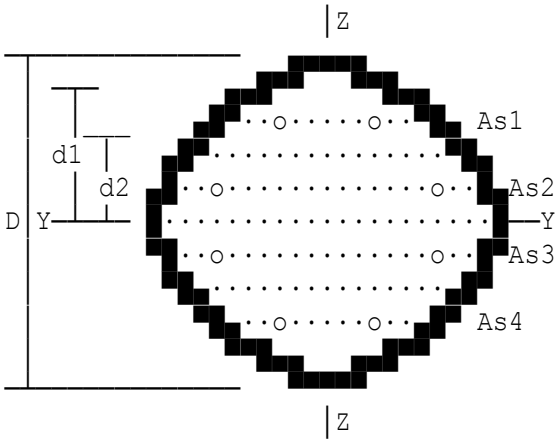

Design to BS EN 1992-1-1:2004

Solution is obtained by trial-and-adjustment procedure with check calculations printed out beneath. The concrete section is split into eight strips of equal depth. Eight steel bars arranged as shown are assumed, giving four steel areas.

Design ultimate axial load	NEd=1 kN
Design ultimate moment	MEd=128 kNm
Section diameter	D=350 mm
Partial safety factor for steel	gams=1.15
Char yield strength of reinft.	fyk=500 N/mm²
Diameter of longitudinal reinft.	dia=16 mm
Diameter of column links	dial=8 mm

SUMMARY (fck=50 N/mm² : fyk=500 N/mm²)

(Note: 'microstrain' indicates true strain multiplied by 1,000,000.)

Diameter of section	**350 mm**
Cover to all reinforcement	**45 mm**
Diameter of longitudinal reinft.	**16 mm**
Number of main bars	**14**
Area of steel provided	**2814.9 mm²**
Percentage of steel provided	**2.9257 %**
Size of links provided	**8 mm**
Comp.strain at outer conc.fibre	**3500 microstrain**
Comp.strain at steel area As1	**1414.2 microstrain**
Tensile strain at steel area As4	**4891.3 microstrain**
Depth of concrete in compression	**116.92 mm**

	Specified	Calculated	Excess (%)
Design axial load (kN)	**1**	**94.331**	**9333.1**
Satisfactory			
Resistance moment (kNm)	**128**	**128.86**	**0.6**
Satisfactory			

The above result is judged acceptable.

Location: Large column (Mild steel, Low moment, High axial load)

Design of circular section under bending and axial load to EC2

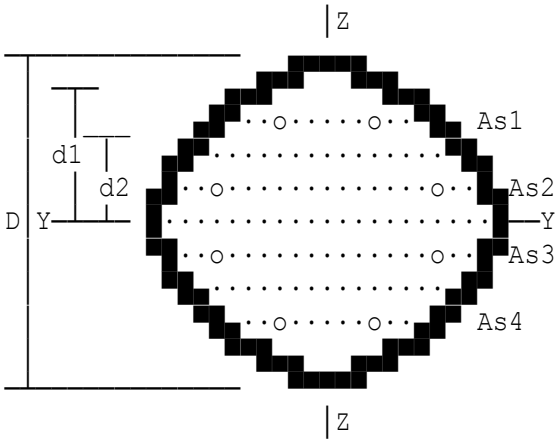

Design to BS EN 1992-1-1:2004

Solution is obtained by trial-and-adjustment procedure with check calculations printed out beneath. The concrete section is split into eight strips of equal depth. Eight steel bars arranged as shown are assumed, giving four steel areas.

Design ultimate axial load	NEd=10000 kN
Design ultimate moment	MEd=100 kNm
Section diameter	D=1500 mm
Partial safety factor for steel	gams=1.15
Char yield strength of reinft.	fyk=500 N/mm²
Diameter of column links	dial=10 mm
Nominal cover to all steel	c=25 mm

SUMMARY (fck=28 N/mm² : fyk=500 N/mm²)

(Note: 'microstrain' indicates true strain multiplied by 1,000,000.)

Diameter of section	**1500 mm**
Cover to all reinforcement	**25 mm**
Diameter of longitudinal reinft.	**12 mm**
Number of main bars	**32**
Area of steel provided	**3619.1 mm²**
Percentage of steel provided	**0.2048 %**
Size of links provided	**10 mm**
Comp.strain at outer conc.fibre	**3500 microstrain**
Comp.strain at steel area As1	**3305.9 microstrain**
Comp.strain at steel area As4	**628.6 microstrain**
Depth of concrete in compression	**1500 mm**

	Specified	Calculated	Excess (%)
Design axial load (kN)	**10000**	**26383**	**163.8**
Satisfactory			
Resistance moment (kNm)	**499.5**	**1326.1**	**165.4**
Satisfactory			

Section reinforced with the minimum permissible steel area of 0.2 % can support the specified loading shown, and is accepted as the design.

Location: Medium-sized column (High-yield steel,Moderate mom,Low ld)

Design of circular section under bending and axial load to EC2

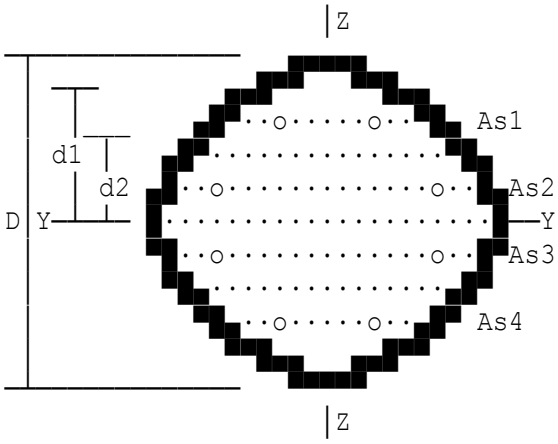

Design to BS EN 1992-1-1:2004

Solution is obtained by trial-and-adjustment procedure with check calculations printed out beneath. The concrete section is split into eight strips of equal depth. Eight steel bars arranged as shown are assumed, giving four steel areas.

Design ultimate axial load	NEd=10 kN
Design ultimate moment	MEd=300 kNm
Section diameter	D=450 mm
Partial safety factor for steel	gams=1.15
Char yield strength of reinft.	fyk=500 N/mm²
Diameter of column links	dial=8 mm
Nominal cover to all steel	c=25 mm

SUMMARY (fck=32 N/mm² : fyk=500 N/mm²)

(Note: 'microstrain' indicates true strain multiplied by 1,000,000.)

Diameter of section	**450 mm**
Cover to all reinforcement	**25 mm**
Diameter of longitudinal reinft.	**12 mm**
Number of main bars	**42**
Area of steel provided	**4750.1 mm²**
Percentage of steel provided	**2.9867 %**
Size of links provided	**8 mm**
Comp.strain at outer conc.fibre	**3500 microstrain**
Comp.strain at steel area As1	**2280.1 microstrain**
Tensile strain at steel area As4	**5606.8 microstrain**
Depth of concrete in compression	**152.52 mm**

	Specified	Calculated	Excess (%)
Design axial load (kN)	**10**	**115.23**	**1052.2**
Satisfactory			
Resistance moment (kNm)	**300**	**306.96**	**2.3**
Satisfactory			

The above result is judged acceptable.

Location: Medium-sized column (Mild steel, High mom, Moderate load)

Design of circular section under bending and axial load to EC2

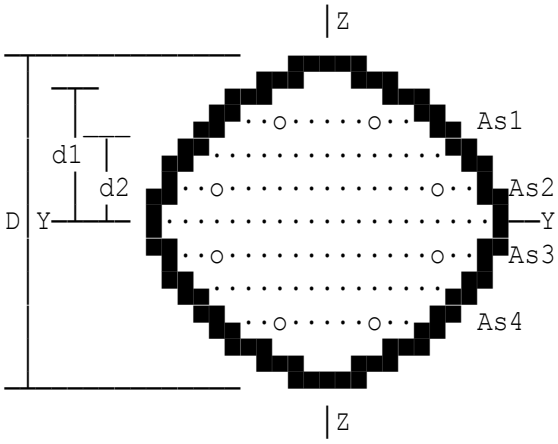

Design to BS EN 1992-1-1:2004

Solution is obtained by trial-and-adjustment procedure with check calculations printed out beneath. The concrete section is split into eight strips of equal depth. Eight steel bars arranged as shown are assumed, giving four steel areas.

Design ultimate axial load	NEd=500 kN
Design ultimate moment	MEd=420 kNm
Section diameter	D=500 mm
Partial safety factor for steel	gams=1.15
Char yield strength of reinft.	fyk=500 N/mm²
Diameter of column links	dial=8 mm
Nominal cover to all steel	c=25 mm

SUMMARY (fck=32 N/mm² : fyk=500 N/mm²)

(Note: 'microstrain' indicates true strain multiplied by 1,000,000.)

Diameter of section	**500 mm**
Cover to all reinforcement	**25 mm**
Diameter of longitudinal reinft.	**12 mm**
Number of main bars	**46**
Area of steel provided	**5202.5 mm²**
Percentage of steel provided	**2.6496 %**
Size of links provided	**8 mm**
Comp.strain at outer conc.fibre	**3500 microstrain**
Comp.strain at steel area As1	**2556.2 microstrain**
Tensile strain at steel area As4	**4126.8 microstrain**
Depth of concrete in compression	**204.19 mm**

	Specified	Calculated	Excess (%)
Design axial load (kN)	**500**	**606.74**	**21.3**
Satisfactory			
Resistance moment (kNm)	**420**	**428.06**	**1.9**
Satisfactory			

The above result is judged acceptable.

Location: Column C2 (Ground-1st floor)

Analysis of circular section subjected to service bending moment and axial load, including crack-width calculation (no tension stiffening)

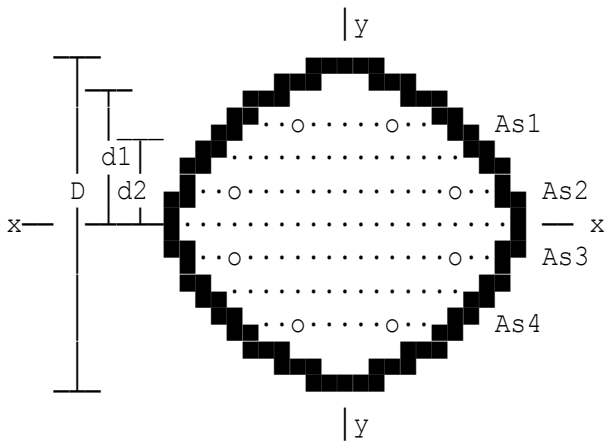

Service-load calculations are based on the assumptions given in BS8110 (1985). Any tension stiffening is ignored. Solution is found by trial and adjustment, check calculations being printed out below. The concrete section is split into eight strips of equal depth. Eight steel reinforcing bars arranged as shown are assumed, paired to give four areas.

Diameter of section	D=800 mm
Characteristic concrete strength	fcu=30 N/mm²
Characteristic steel strength	fy=500 N/mm²
Size of links	dial=8 mm
Designated exposure class is XC2	
Specified fixing tolerance	tol=10 mm
Nominal cover to all steel	cover=35 mm
Size of main bars	diac=25 mm
Number of bars provided	num=8

Determination of response of section

Applied axial service load N=800 kN
Applied service moment M=500 kNm

SUMMARY (fcu=30 N/mm² : fy=500 N/mm²)

(Note: 'microstrain' indicates true strain multiplied by 1,000,000.)

Diameter of section	**800 mm**
Cover to all reinforcement	**35 mm**
Size of main bars	**25 mm**
Number of main bars	**8**
Percentage of steel provided	**0.78125 %**
Comp.strain at outer conc.fibre	**859.87 microstrain**
Strain at steel area As1	**579.32 microstrain**
Strain at steel area As4	**-1605.9 microstrain**
Depth of concrete in compression	**250.48 mm**

Crack width between two bottom bars is 0.59233 mm

Forces and moments	**Specified**	**Calculated**	**Excess (%)**
Axial load in kN	**800**	**806.37**	**0.7**
Resistance moment in kNm	**500**	**502.02**	**0.4**

Location: Ex1 - Column C2 (Ground-1st floor)

Analysis of circular section subjected to service bending moment and axial load, including crack-width calculation (no tension stiffening)

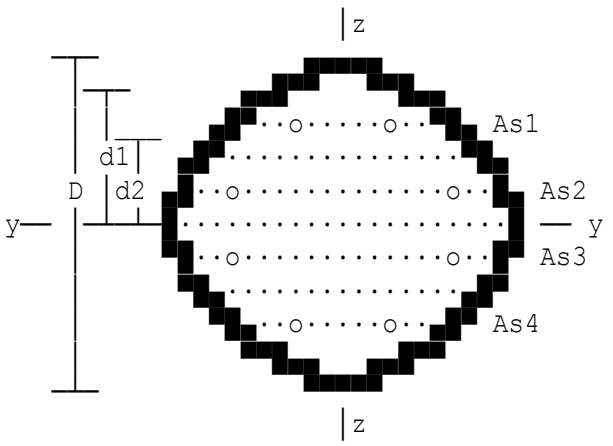

Service-load calculations are based on the assumptions given in BS EN 1992-1-1:2004. Any tension stiffening is ignored. Solution is found by trial and adjustment, check calculations being printed out below. The concrete section is split into eight strips of equal depth. Eight steel reinforcing bars arranged as shown are assumed, paired to give four areas.

Diameter of section	D=800 mm
Char yield strength of reinft.	fyk=500 N/mm²
Partial safety factor for steel	gams=1.15
Diameter of longitudinal reinft.	dia=25 mm
Diameter of column links	dial=8 mm
Number of bars provided	num=8

Determination of response of section

Applied axial service load N=800 kN
Applied service moment M=500 kNm

SUMMARY (fck=25 N/mm² : fyk=500 N/mm²)

(Note: 'microstrain' indicates true strain multiplied by 1,000,000.)

Diameter of section	**800 mm**
Cover to all reinforcement	**40 mm**
Diameter of longitudinal reinft.	**25 mm**
Number of main bars	**8**
Percentage of steel provided	**0.78125 %**
Comp.strain at outer conc.fibre	**1076 microstrain**
Strain at steel area As1	**738.85 microstrain**
Strain at steel area As4	**-1710.7 microstrain**
Depth of concrete in compression	**275.56 mm**

Crack width between two bottom bars is 0.64624 mm

Forces and moments	**Specified**	**Calculated**	**Excess (%)**
Axial load in kN	**800**	**800.9**	**0.1**
Resistance moment in kNm	**500**	**500.29**	**0**

Location: Column C2 (1st to 2nd floor)

Analysis of circular section subjected to service bending moment and axial load, including crack-width assessment (with tension stiffening)

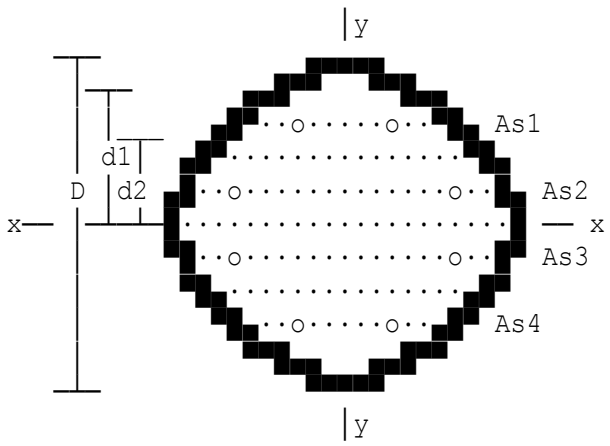

Service-load calculations are based on the assumptions given in BS8110 (1985), with tension stiffening as given in Part 2. Solution is found by trial and adjustment, check calculations being printed out below. The concrete section is split into eight strips of equal depth. Eight steel reinforcing bars arranged as shown are assumed, paired to give four areas.

Diameter of section	D=800 mm
Characteristic concrete strength	fcu=30 N/mm²
Characteristic steel strength	fy=500 N/mm²
Size of links	dial=8 mm
Designated exposure class is XC2	
Specified fixing tolerance	tol=10 mm
Nominal cover to all steel	cover=35 mm
Size of main bars	diac=25 mm
Number of bars provided	num=8
Applied axial service load	N=800 kN
Applied service moment	M=500 kNm

SUMMARY (fcu=30 N/mm² : fy=500 N/mm²)

(Note: 'microstrain' indicates true strain multiplied by 1,000,000.)

Diameter of section	**800 mm**
Cover to all reinforcement	**35 mm**
Size of main bars	**25 mm**
Number of main bars	**8**
Percentage of steel provided	**0.78125 %**
Comp.strain at outer conc.fibre	**752.02 microstrain**
Strain at steel area As1	**529.93 microstrain**
Strain at steel area As4	**-1199.9 microstrain**
Depth of concrete in compression	**276.73 mm**

Crack width between two bottom bars is 0.44061 mm

Forces and moments	**Specified**	**Calculated**	**Excess (%)**
Axial load in kN	**800**	**804.44**	**0.5**
Resistance moment in kNm	**500**	**501.27**	**0.2**

Location: Small column: high steel proportion, load and moment

Analysis of circular section subjected to service bending moment and axial load, including crack-width assessment (with tension stiffening)

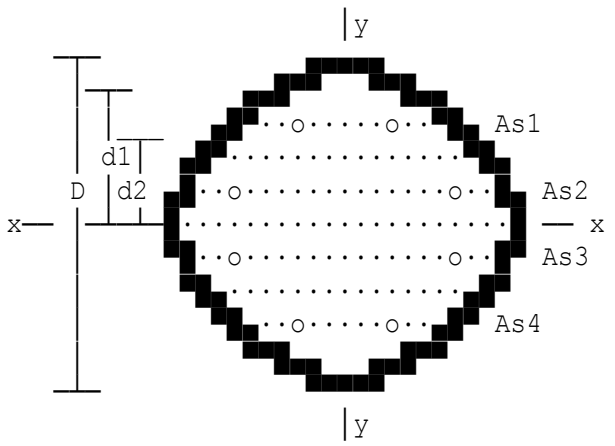

Service-load calculations are based on the assumptions given in BS8110 (1985), with tension stiffening as given in Part 2. Solution is found by trial and adjustment, check calculations being printed out below. The concrete section is split into eight strips of equal depth. Eight steel reinforcing bars arranged as shown are assumed, paired to give four areas.

Diameter of section	D=200 mm
Characteristic concrete strength	fcu=60 N/mm²
Characteristic steel strength	fy=500 N/mm²
Size of links	dial=6 mm
Designated exposure class is XC1	
Specified fixing tolerance	tol=10 mm
Nominal cover to all steel	cover=25 mm
Size of main bars	diac=16 mm
Number of bars provided	num=8
Applied axial service load	N=75 kN
Applied service moment	M=29 kNm

SUMMARY (fcu=60 N/mm² : fy=500 N/mm²)

(Note: 'microstrain' indicates true strain multiplied by 1,000,000.)

Diameter of section	**200 mm**
Cover to all reinforcement	**25 mm**
Size of main bars	**16 mm**
Number of main bars	**8**
Percentage of steel provided	**5.12 %**
Comp.strain at outer conc.fibre	**1623.2 microstrain**
Strain at steel area As1	**703.45 microstrain**
Strain at steel area As4	**-1671.9 microstrain**
Depth of concrete in compression	**77.023 mm**

Crack width between two bottom bars is 0.27558 mm

Forces and moments	**Specified**	**Calculated**	**Excess (%)**
Axial load in kN	**75**	**75.837**	**1.1**
Resistance moment in kNm	**29**	**29.06**	**0.2**

Location: Large column: minimum mild steel: axial load only

Analysis of circular section subjected to service bending moment and axial load, including crack-width assessment (with tension stiffening)

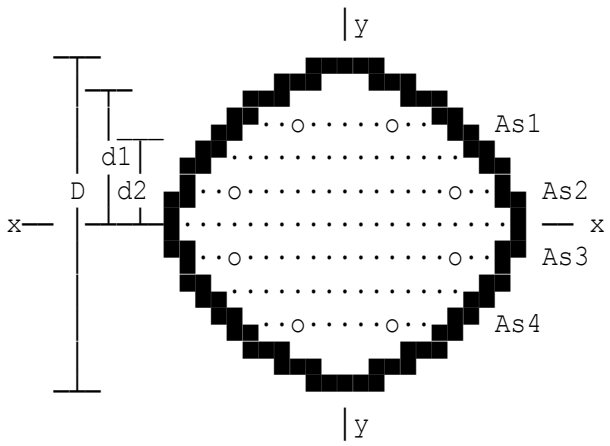

Service-load calculations are based on the assumptions given in BS8110 (1985), with tension stiffening as given in Part 2. Solution is found by trial and adjustment, check calculations being printed out below. The concrete section is split into eight strips of equal depth. Eight steel reinforcing bars arranged as shown are assumed, paired to give four areas.

Diameter of section	D=2000 mm
Characteristic concrete strength	fcu=40 N/mm²
Characteristic steel strength	fy=250 N/mm²
Size of links	dial=10 mm
Designated exposure class is XC4	
Specified fixing tolerance	tol=10 mm
Nominal cover to all steel	cover=35 mm
Size of main bars	diac=40 mm
Number of bars provided	num=12
Applied axial service load	N=85000 kN
Applied service moment	M=0 kNm

SUMMARY (fcu=40 N/mm² : fy=250 N/mm²)

(Note: 'microstrain' indicates true strain multiplied by 1,000,000.)

Diameter of section	**2000 mm**
Cover to all reinforcement	**35 mm**
Size of main bars	**40 mm**
Number of main bars	**12**
Percentage of steel provided	**0.48 %**
Comp.strain at outer conc.fibre	**2012.9 microstrain**
Strain at steel area As1	**1934.7 microstrain**
Strain at steel area As4	**942 microstrain**

Entire section is in compression, therefore no cracking occurs.
Crack width between two bottom bars is 0 mm

Forces and moments	**Specified**	**Calculated**	**Excess (%)**
Axial load in kN	**85000**	**84954**	**0**
Resistance moment in kNm	**1700**	**1700**	**0**

Location: As Example No.2 but with tensile axial load

Analysis of circular section subjected to service bending moment and axial load, including crack-width assessment (with tension stiffening)

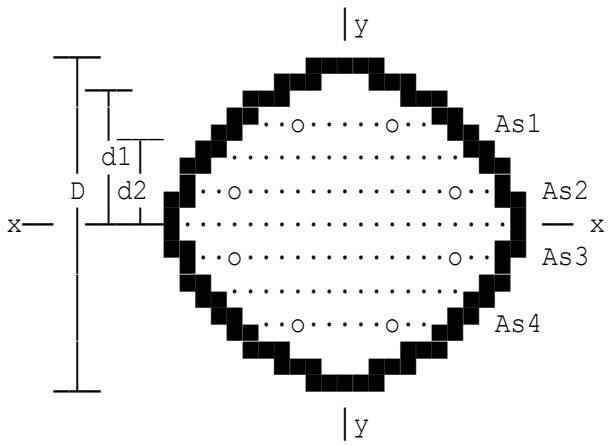

Service-load calculations are based on the assumptions given in BS8110 (1985), with tension stiffening as given in Part 2. Solution is found by trial and adjustment, check calculations being printed out below. The concrete section is split into eight strips of equal depth. Eight steel reinforcing bars arranged as shown are assumed, paired to give four areas.

Diameter of section	D=200 mm
Characteristic concrete strength	fcu=60 N/mm²
Characteristic steel strength	fy=500 N/mm²
Size of links	dial=6 mm
Designated exposure class is XC1	
Specified fixing tolerance	tol=10 mm
Nominal cover to all steel	cover=25 mm
Size of main bars	diac=16 mm
Number of bars provided	num=8
Applied axial service load	N=-75 kN
Applied service moment	M=29 kNm

SUMMARY (fcu=60 N/mm² : fy=500 N/mm²)

(Note: 'microstrain' indicates true strain multiplied by 1,000,000.)

Diameter of section	**200 mm**
Cover to all reinforcement	**25 mm**
Size of main bars	**16 mm**
Number of main bars	**8**
Percentage of steel provided	**5.12 %**
Comp.strain at outer conc.fibre	**1624.4 microstrain**
Strain at steel area As1	**560.66 microstrain**
Strain at steel area As4	**-2186.6 microstrain**
Depth of concrete in compression	**66.646 mm**

As strain es4 exceeds 0.8*fy/Es, Clause 3.8.3 of BS8110: Part 2 does not apply. Cracking may be critical.

Forces and moments	**Specified**	**Calculated**	**Excess (%)**
Axial load in kN	**-75**	**-74.47**	**0.7**
Resistance moment in kNm	**29**	**29.039**	**0.1**

Location: Ex1 - Column C2 (1st to 2nd floor)

Analysis of circular section subjected to service bending moment and axial load, including crack-width assessment (with tension stiffening)

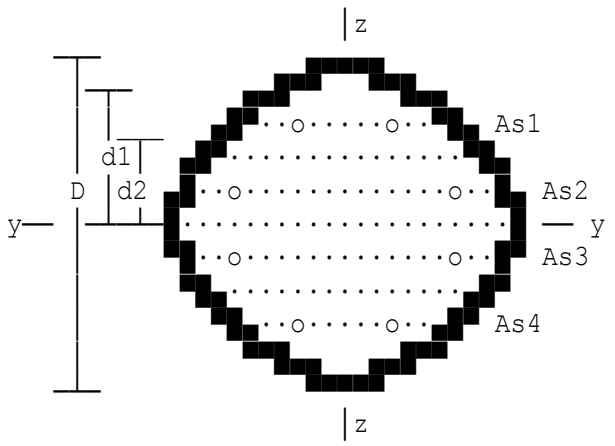

Service-load calculations with tension stiffening are based on the assumptions given in EC2.

Solution is found by trial and adjustment, check calculations being printed out below. The concrete section is split into eight strips of equal depth. Eight steel reinforcing bars arranged as shown are assumed, paired to give four areas.

Diameter of section	D=800 mm
Char yield strength of reinft.	fyk=500 N/mm²
Partial safety factor for steel	gams=1.15
Diameter of longitudinal reinft.	dia=25 mm
Diameter of column links	dial=8 mm
Number of bars provided	num=8
Applied axial service load	N=800 kN
Applied service moment	M=500 kNm

SUMMARY (fck=25 N/mm² : fyk=500 N/mm²)

(Note: 'microstrain' indicates true strain multiplied by 1,000,000.)

Diameter of section	**800 mm**
Cover to all reinforcement	**40 mm**
Diameter of longitudinal reinft.	**25 mm**
Number of main bars	**8**
Percentage of steel provided	**0.78125 %**
Comp.strain at outer conc.fibre	**961.89 microstrain**
Strain at steel area As1	**687.03 microstrain**
Strain at steel area As4	**-1309.9 microstrain**
Depth of concrete in compression	**302.16 mm**

Crack width between two bottom bars is 0.49308 mm

Forces and moments	**Specified**	**Calculated**	**Excess (%)**
Axial load in kN	**800**	**803.32**	**0.4**
Resistance moment in kNm	**500**	**500.97**	**0.1**

Location: Ex2 - Small column: high steel proportion, load and moment

Analysis of circular section subjected to service bending moment and axial load, including crack-width assessment (with tension stiffening)

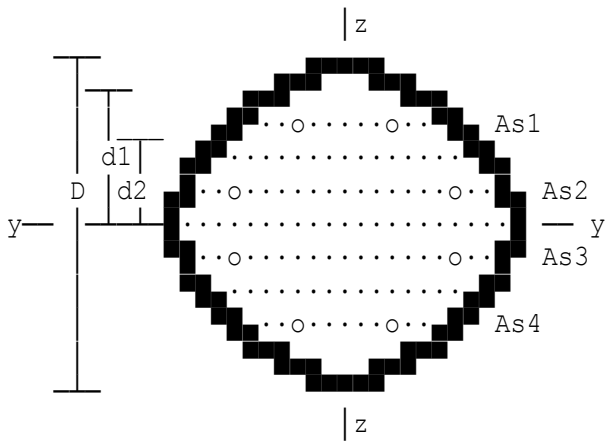

Service-load calculations with tension stiffening are based on the assumptions given in EC2.

Solution is found by trial and adjustment, check calculations being printed out below. The concrete section is split into eight strips of equal depth. Eight steel reinforcing bars arranged as shown are assumed, paired to give four areas.

Diameter of section	D=250 mm
Char yield strength of reinft.	fyk=500 N/mm²
Partial safety factor for steel	gams=1.15
Diameter of longitudinal reinft.	dia=16 mm
Diameter of column links	dial=8 mm
Number of bars provided	num=8
Applied axial service load	N=75 kN
Applied service moment	M=29 kNm

SUMMARY (fck=50 N/mm² : fyk=500 N/mm²)

(Note: 'microstrain' indicates true strain multiplied by 1,000,000.)

Diameter of section	**250 mm**
Cover to all reinforcement	**35 mm**
Diameter of longitudinal reinft.	**16 mm**
Number of main bars	**8**
Percentage of steel provided	**3.2768 %**
Comp.strain at outer conc.fibre	**943.4 microstrain**
Strain at steel area As1	**346.65 microstrain**
Strain at steel area As4	**-1094.2 microstrain**
Depth of concrete in compression	**89.53 mm**

Crack width between two bottom bars is 0.24327 mm

Forces and moments	**Specified**	**Calculated**	**Excess (%)**
Axial load in kN	**75**	**75.752**	**1**
Resistance moment in kNm	**29**	**29.067**	**0.2**

Location: Ex3 - Large column: minimum mild steel: axial load only

Analysis of circular section subjected to service bending moment and axial load, including crack-width assessment (with tension stiffening)

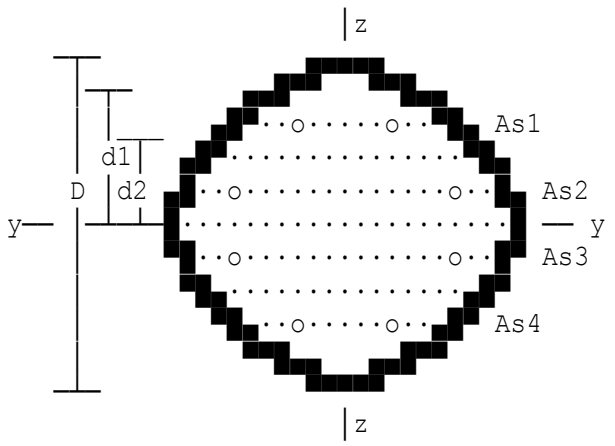

Service-load calculations with tension stiffening are based on the assumptions given in EC2.

Solution is found by trial and adjustment, check calculations being printed out below. The concrete section is split into eight strips of equal depth. Eight steel reinforcing bars arranged as shown are assumed, paired to give four areas.

Diameter of section	D=2000 mm
Char yield strength of reinft.	fyk=500 N/mm²
Partial safety factor for steel	gams=1.15
Diameter of longitudinal reinft.	dia=40 mm
Diameter of column links	dial=10 mm
Number of bars provided	num=25
Applied axial service load	N=85000 kN
Applied service moment	M=0 kNm

SUMMARY (fck=32 N/mm² : fyk=500 N/mm²)

(Note: 'microstrain' indicates true strain multiplied by 1,000,000.)

Diameter of section	**2000 mm**
Cover to all reinforcement	**50 mm**
Diameter of longitudinal reinft.	**40 mm**
Number of main bars	**25**
Percentage of steel provided	**1 %**
Comp.strain at outer conc.fibre	**2193.4 microstrain**
Strain at steel area As1	**2087.6 microstrain**
Strain at steel area As4	**888.5 microstrain**

Entire section is in compression, therefore no cracking occurs.
Crack width between two bottom bars is 0 mm

Forces and moments	**Specified**	**Calculated**	**Excess (%)**
Axial load in kN	**85000**	**85003**	**0**
Resistance moment in kNm	**5661**	**5661.2**	**0**

Location: Ex4 - As Example No.2 but with tensile axial load

Analysis of circular section subjected to service bending moment and axial load, including crack-width assessment (with tension stiffening)

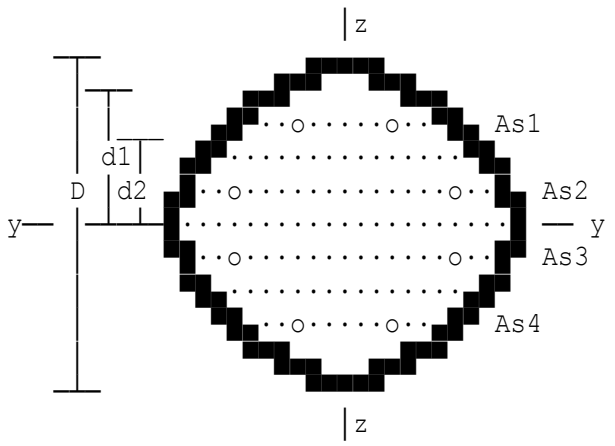

Service-load calculations with tension stiffening are based on the assumptions given in EC2.

Solution is found by trial and adjustment, check calculations being printed out below. The concrete section is split into eight strips of equal depth. Eight steel reinforcing bars arranged as shown are assumed, paired to give four areas.

Diameter of section	D=250 mm
Char yield strength of reinft.	fyk=500 N/mm²
Partial safety factor for steel	gams=1.15
Diameter of longitudinal reinft.	dia=16 mm
Diameter of column links	dial=8 mm
Number of bars provided	num=8
Applied axial service load	N=-75 kN
Applied service moment	M=29 kNm

SUMMARY (fck=50 N/mm² : fyk=500 N/mm²)

(Note: 'microstrain' indicates true strain multiplied by 1,000,000.)

Diameter of section	**250 mm**
Cover to all reinforcement	**35 mm**
Diameter of longitudinal reinft.	**16 mm**
Number of main bars	**8**
Percentage of steel provided	**3.2768 %**
Comp.strain at outer conc.fibre	**992.86 microstrain**
Strain at steel area As1	**226.96 microstrain**
Strain at steel area As4	**-1622.2 microstrain**
Depth of concrete in compression	**73.415 mm**

Crack width between two bottom bars is 0.3478 mm

Forces and moments	**Specified**	**Calculated**	**Excess (%)**
Axial load in kN	**-75**	**-74.573**	**0.5**
Resistance moment in kNm	**29**	**29.039**	**0.1**

Location: Typical column section reinforced with high-yield steel

Design of rectangular section for uniaxial bending and thrust

(using parabolic-rectangular stress-strain curve for concrete)

Design to BS8110(1997), partial safety factor for steel gammaS=1.15

Calculations based on assumptions given in BS 8110. Solution is found by trial and adjustment, with check calculations printed out beneath. The concrete section is divided into eight strips of equal depth. Two symmetrically-placed layers of steel are assumed. (Only positive values of moment are valid.)

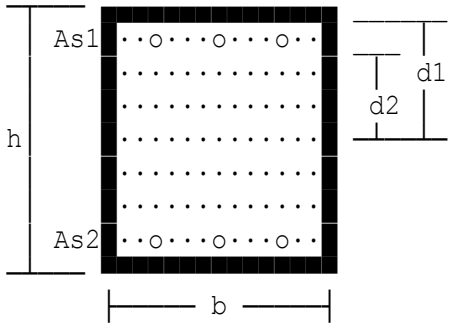

Design axial load	N=5000 kN
Design moment	M=1500 kNm
Section depth	h=900 mm
Section breadth	b=600 mm
Size of links	dial=8 mm
Characteristic concrete strength	fcu=30 N/mm²
Characteristic steel strength	fy=500 N/mm²
Designated exposure class is XC2	
Specified fixing tolerance	tol=10 mm
Nominal cover to all steel	cover=35 mm

Distances to centroids of strips

d1=0.4375*h=393.75 mm	d5=-0.0625*h=-56.25 mm
d2=0.3125*h=281.25 mm	d6=-0.1875*h=-168.75 mm
d3=0.1875*h=168.75 mm	d7=-0.3125*h=-281.25 mm
d4=0.0625*h=56.25 mm	d8=-0.4375*h=-393.75 mm

The forces in the strips are found by integrating the parabolic stress-strain curve. If a strip is partly in compression, the force is still assumed to act at the centroid positions as calculated above.

Calculation of strains and forces in concrete strips

Max.stress on stress-strain curve fu=0.444*fcu=13.32 N/mm².
As strain at bottom eb exceeds e1, rectangular part of curve applies and
force on strip f=A*fu/1E3=899.1 kN
As strain at bottom eb exceeds e1, rectangular part of curve applies and
force on strip f=A*fu/1E3=899.1 kN
As strain at bottom eb exceeds e1, rectangular part of curve applies and
force on strip f=A*fu/1E3=899.1 kN
As strain at top of strip et exceeds e1, but strain at bottom eb is
less than e1, both parabolic and rectangular parts of curve apply. Thus
stress at strip bottom fb=fu*(2*eb/e1-eb^2/e1^2)
=13.298 N/mm², and
force on strip f=A*fu*(1-0.333*(1-fb/fu)*(e1-eb)/(et-eb))/1E3
=899.06 kN
As strain at top of strip et does not exceed e1, parabolic part of
stress-strain curve applies, and
force on strip f=A*fu*((et+eb)/e1-(et^2+et*eb+eb^2)/e1^2/3)
/1E3=777.21 kN
Strain at strip bottom is negative; only part of strip in compression.
As strain at top of strip et does not exceed e1,
force on strip f=A*et/(et-eb)*fu*(et/e1-((et/e1)^2)/3)/1E3
=200.59 kN
Size of main bars diac=25

SUMMARY (fcu=30 N/mm² : fy=500 N/mm²)

(Note: 'microstrain' indicates true strain multiplied by 1,000,000.)

Section dimensions	**900 mm deep by 600 mm wide**
Cover to all reinforcement	**35 mm**
Size of main bars	**25 mm**
Number of main bars	**14**
Area of steel provided	**6872.2 mm²**
Percentage of steel provided	**1.2726 %**
Size of links provided	**8 mm**
Comp.strain at outer conc.fibre	**3500 microstrain**
Comp.strain at steel area As1	**3195.3 microstrain**
Tensile strain at steel area As2	**1136.4 microstrain**
Depth of concrete in compression	**637.51 mm**

	Specified	**Calculated**	**Excess (%)**
Axial load in kN	**5000**	**5287.2**	**5.7**
Satisfactory			
Resistance moment in kNm	**1500**	**1629.1**	**8.6**
Satisfactory			

The above result is judged acceptable.

Location: Small column section, low axial load & substantial moment

Design of rectangular section for uniaxial bending and thrust

(using parabolic-rectangular stress-strain curve for concrete)

Design to BS8110(1997), partial safety factor for steel gammaS=1.15

Calculations based on assumptions given in BS 8110. Solution is found by trial and adjustment, with check calculations printed out beneath. The concrete section is divided into eight strips of equal depth. Two symmetrically-placed layers of steel are assumed. (Only positive values of moment are valid.)

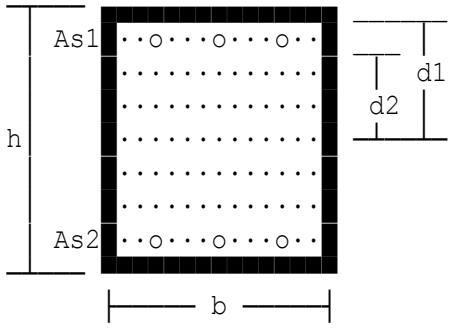

Design axial load	N=250 kN
Design moment	M=450 kNm
Section depth	h=500 mm
Section breadth	b=400 mm
Size of links	dial=8 mm
Characteristic concrete strength	fcu=60 N/mm²
Characteristic steel strength	fy=500 N/mm²
Nominal cover to all steel	cover=30 mm

Distances to centroids of strips

d1=0.4375*h=218.75 mm d5=-0.0625*h=-31.25 mm
d2=0.3125*h=156.25 mm d6=-0.1875*h=-93.75 mm
d3=0.1875*h=93.75 mm d7=-0.3125*h=-156.25 mm
d4=0.0625*h=31.25 mm d8=-0.4375*h=-218.75 mm

The forces in the strips are found by integrating the parabolic stress-strain curve. If a strip is partly in compression, the force is still assumed to act at the centroid positions as calculated above.

Calculation of strains and forces in concrete strips

Max.stress on stress-strain curve fu=0.444*fcu=26.64 N/mm².
As strain at top of strip et exceeds e1, but strain at bottom eb is less than e1, both parabolic and rectangular parts of curve apply. Thus
stress at strip bottom fb=fu*(2*eb/e1-eb^2/e1^2)
=19.632 N/mm², and
force on strip f=A*fu*(1-0.333*(1-fb/fu)*(e1-eb)/(et-eb))/1E3
=649.55 kN
Strain at strip bottom is negative; only part of strip in compression.
As strain at top of strip et does not exceed e1,
force on strip f=A*et/(et-eb)*fu*(et/e1-((et/e1)^2)/3)/1E3
=72.78 kN
Size of main bars diac=32

SUMMARY (fcu=60 N/mm² : fy=500 N/mm²)

(Note: 'microstrain' indicates true strain multiplied by 1,000,000.)

Section dimensions	**500 mm deep by 400 mm wide**
Cover to all reinforcement	**30 mm**
Size of main bars	**32 mm**
Number of main bars	**6**
Area of steel provided	**4825.5 mm²**
Percentage of steel provided	**2.4127 %**
Size of links provided	**8 mm**
Comp.strain at outer conc.fibre	**3500 microstrain**
Comp.strain at steel area As1	**1114.8 microstrain**
Tensile strain at steel area As2	**16200 microstrain**
Depth of concrete in compression	**79.239 mm**

	Specified	**Calculated**	**Excess (%)**
Axial load in kN	**250**	**211.27**	**-15.4**
Insufficient			
Resistance moment in kNm	**450**	**464.51**	**3.2**
Satisfactory			

The above result is judged acceptable.

Location: Substantial column section reinforced with mild steel

Design of rectangular section for uniaxial bending and thrust

(using parabolic-rectangular stress-strain curve for concrete)

Design to BS8110(1997), partial safety factor for steel gammaS=1.15

Calculations based on assumptions given in BS 8110. Solution is found by trial and adjustment, with check calculations printed out beneath. The concrete section is divided into eight strips of equal depth. Two symmetrically-placed layers of steel are assumed. (Only positive values of moment are valid.)

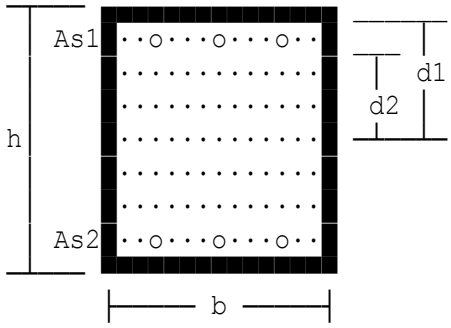

Design axial load	N=200 kN
Design moment	M=1000 kNm
Section depth	h=1500 mm
Section breadth	b=1000 mm
Size of links	dial=16 mm
Characteristic concrete strength	fcu=25 N/mm²
Characteristic steel strength	fy=250 N/mm²
Designated exposure class is XC1	
Specified fixing tolerance	tol=10 mm
Nominal cover to all steel	cover=25 mm

Distances to centroids of strips

d1=0.4375*h=656.25 mm	d5=-0.0625*h=-93.75 mm
d2=0.3125*h=468.75 mm	d6=-0.1875*h=-281.25 mm
d3=0.1875*h=281.25 mm	d7=-0.3125*h=-468.75 mm
d4=0.0625*h=93.75 mm	d8=-0.4375*h=-656.25 mm

The forces in the strips are found by integrating the parabolic stress-strain curve. If a strip is partly in compression, the force is still assumed to act at the centroid positions as calculated above.

Calculation of strains and forces in concrete strips

Max.stress on stress-strain curve fu=0.444*fcu=11.1 N/mm².
Strain at strip bottom is negative; only part of strip in compression.
As strain at top of strip et exceeds e1,

force on strip	f=A*et/(et-eb)*fu*(1-0.333*e1/et) /1E3=645.77 kN
Size of main bars	diac=16

SUMMARY (fcu=25 N/mm² : fy=250 N/mm²)

(Note: 'microstrain' indicates true strain multiplied by 1,000,000.)

Section dimensions	**1500 mm deep by 1000 mm wide**
Cover to all reinforcement	**25 mm**
Size of main bars	**16 mm**
Number of main bars	**30**
Area of steel provided	**6031.9 mm²**
Percentage of steel provided	**0.40212 %**
Size of links provided	**16 mm**
Comp.strain at outer conc.fibre	**1289.2 microstrain**
Comp.strain at steel area As1	**570.24 microstrain**
Tensile strain at steel area As2	**20000 microstrain**
Depth of concrete in compression	**87.866 mm**

	Specified	**Calculated**	**Excess (%)**	
Axial load in kN	**200**	**334.09**	**67**	**Satisfactory**
Resistance moment in kNm	**1000**	**1124.5**	**12.4**	**Satisfactory**

Section reinforced with the min permissible steel area of 0.4% can support the specified loading shown, and is accepted as the design.

Location: Typical column section reinforced with high-yield steel

Design of rectangular section for uniaxial bending and thrust

(using parabolic-rectangular stress-strain curve for concrete)

Calculations based on assumptions given in EC2. Solution is found by trial and adjustment, with check calculations printed out beneath. The concrete section is divided into eight strips of equal depth. Two symmetrically-placed layers of steel are assumed (only positive values of moment are valid).

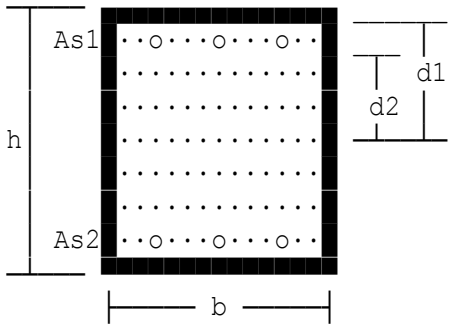

Design axial load	N=5000 kN
Design moment	M=1500 kNm
Section depth	h=900 mm
Section breadth	b=600 mm
Partial safety factor for steel	gams=1.15
Characteristic steel strength	fyk=500 N/mm²
Diameter of longitudinal reinft.	dia=25 mm
Diameter of column links	dial=8 mm
Diameter of longitudinal reint.	diac=25

SUMMARY (fck=25 N/mm² : fyk=500 N/mm²)

(Note: 'microstrain' indicates true strain multiplied by 1,000,000.)

Section dimensions	**900 mm deep by 600 mm wide**
Cover to all reinforcement	**58 mm**
Diameter of longitudinal reinft.	**25 mm**
Number of main bars	**16**
Area of steel provided	**7854 mm²**
Percentage of steel provided	**1.4544 %**
Size of links provided	**8 mm**
Comp.strain at outer conc.fibre	**3500 microstrain**
Comp.strain at steel area As1	**3084 microstrain**
Tensile strain at steel area As2	**853.65 microstrain**
Depth of concrete in compression	**660.42 mm**

	Specified	Calculated	Excess (%)
Axial load in kN	**5000**	**5309.7**	**6.1**
Satisfactory			
Resistance moment in kNm	**1500**	**1623.5**	**8.2**
Satisfactory			

The above result is judged acceptable.

Location: Small column section, low axial load & substantial moment

Design of rectangular section for uniaxial bending and thrust

(using parabolic-rectangular stress-strain curve for concrete)

Calculations based on assumptions given in EC2. Solution is found by trial and adjustment, with check calculations printed out beneath. The concrete section is divided into eight strips of equal depth. Two symmetrically-placed layers of steel are assumed (only positive values of moment are valid).

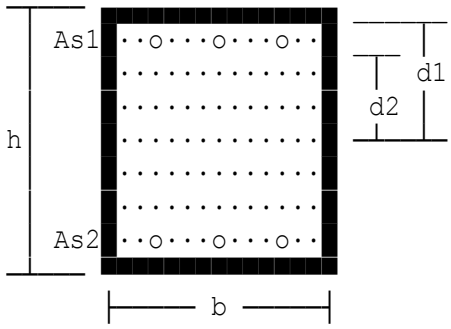

Design axial load	N=175 kN
Design moment	M=450 kNm
Section depth	h=500 mm
Section breadth	b=400 mm
Partial safety factor for steel	gams=1.15
Characteristic steel strength	fyk=500 N/mm²
Diameter of column links	dial=8 mm
Nominal cover to all steel	cover=30 mm
Diameter of longitudinal reint.	diac=25

SUMMARY (fck=50 N/mm² : fyk=500 N/mm²)

(Note: 'microstrain' indicates true strain multiplied by 1,000,000.)

Section dimensions	**500 mm deep by 400 mm wide**
Cover to all reinforcement	**30 mm**
Diameter of longitudinal reinft.	**25 mm**
Number of main bars	**10**
Area of steel provided	**4908.7 mm²**
Percentage of steel provided	**2.4544 %**
Size of links provided	**8 mm**
Comp.strain at outer conc.fibre	**3500 microstrain**
Comp.strain at steel area As1	**1225.1 microstrain**
Tensile strain at steel area As2	**16749 microstrain**
Depth of concrete in compression	**77.696 mm**

	Specified	Calculated	Excess (%)
Axial load in kN	**175**	**204.53**	**16.8**
Satisfactory			
Resistance moment in kNm	**450**	**476.42**	**5.8**
Satisfactory			

The above result is judged acceptable.

Location: Substantial column section reinforced with mild steel

Design of rectangular section for uniaxial bending and thrust

(using parabolic-rectangular stress-strain curve for concrete)

Calculations based on assumptions given in EC2. Solution is found by trial and adjustment, with check calculations printed out beneath. The concrete section is divided into eight strips of equal depth. Two symmetrically-placed layers of steel are assumed (only positive values of moment are valid).

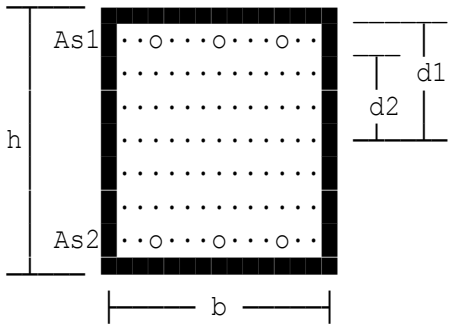

Design axial load	N=200 kN
Design moment	M=10 kNm
Section depth	h=1500 mm
Section breadth	b=1000 mm
Partial safety factor for steel	gams=1.15
Characteristic steel strength	fyk=500 N/mm²
Diameter of longitudinal reinft.	dia=20 mm
Diameter of column links	dial=8 mm
Diameter of longitudinal reint.	diac=20

SUMMARY (fck=25 N/mm² : fyk=500 N/mm²)

(Note: 'microstrain' indicates true strain multiplied by 1,000,000.)

Section dimensions	**1500 mm deep by 1000 mm wide**
Cover to all reinforcement	**30 mm**
Diameter of longitudinal reinft.	**20 mm**
Number of main bars	**10**
Area of steel provided	**3141.6 mm²**
Percentage of steel provided	**0.20944 %**
Size of links provided	**8 mm**
Comp.strain at outer conc.fibre	**3500 microstrain**
Comp.strain at steel area As1	**3411.3 microstrain**
Comp.strain at steel area As2	**817.7 microstrain**
Depth of concrete in compression	**1500 mm**

	Specified	Calculated	Excess (%)
Axial load in kN	**200**	**19686**	**9743.1**
Satisfactory			
Resistance moment in kNm	**10**	**996.44**	**9864.4**
Satisfactory			

Section reinforced with the min permissible steel area of 0.2 % can support the specified loading shown, and is accepted as the design.

Location: Column with biaxial bending and substantial axial load

Design of rectangular section under biaxial bending and axial load

(rigorous procedure using trial and error)

Design to BS8110(1997), partial safety factor for steel gammaS=1.15
Calculations are based on assumptions given in BS 8110. Solution is by trial and error, with check calculations printed out below. The concrete section is divided into 25 elements of equal area.

Moments must be applied to give tension in lower left corner, with dominant moment about X-X axis.

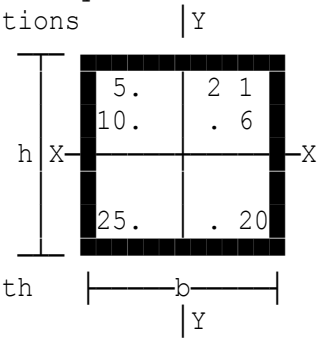

Ult.conditions governed by conc. strain of 0.0035 @ top right corner or steel strain of 0.02 at lower left corner.

Design axial load	N=3000 kN
Design moment about X-X axis	Mx=300 kNm
Design moment about Y-Y axis	My=250 kNm
Depth of section	h=500 mm
Breadth of section	b=600 m
Size of links	dial=8 mm
Characteristic conc strength	fcu=30 N/mm²
Characteristic steel strength	fy=500 N/mm²
Designated exposure class is XC2	
Specified fixing tolerance	tol=10 mm
Nominal cover to all steel	cover=35 mm

Element strains, forces, and contributions to mts about x-x and y-y

```
                                   y
   ┌──────────────────────────────────────────────────────────────────────────┐
   │                                 |
   │  e=0.98101E-3  0.0014763   0.0019715   0.0024668   0.002962              │
   │  f=158.66      159.84      159.84      159.84      159.84                 │
   │ mx=31.732      31.968      31.968      31.968      31.968                 │
   │ my=-38.078     -19.181     0           19.181      38.362                 │
   │                                 |                                          │
   │                                 |                                          │
   │    0.40032E-3  0.89557E-3  0.0013908   0.0018861   0.0023813             │
   │    96.997      155.46      159.84      159.84      159.84                 │
   │    9.6997      15.546      15.984      15.984      15.984                 │
   │    -23.279     -18.655     0           19.181      38.362                 │
   │                                 |                                          │
   │                                 |                                          │
   │    -0.18037E-3 0.31489E-3  0.81014E-3  0.0013054   0.0018007             │
x─ │ ── 0       ── 80.029  ── 150.23  ── 159.84  ── 159.84    ── │─x
   │    0           0           0           0           0                      │
   │    0           -9.6035     0           19.181      38.362                 │
   │                                 |                                          │
   │                                 |                                          │
   │    -0.76106E-3 -0.2658E-3  0.22945E-3  0.72471E-3  0.00122                │
   │    0           0           61.036      142.98      159.84                 │
   │    0           0           -6.1036     -14.298     -15.984                │
   │    0           0           0           17.157      38.362                 │
   │                                 |                                          │
   │                                 |                                          │
   │    -0.0013417  -0.84649E-3 -0.35123E-3 0.14402E-3  0.63928E-3            │
   │    0           0           0           40.018      133.7                  │
   │    0           0           0           -8.0035     -26.74                 │
   │    0           0           0           4.8021      32.088                 │
   │                                 |                                          │
   └──────────────────────────────────────────────────────────────────────────┘
                                   y
```

Calculation of strains and forces in steel areas

Steel arrangement:

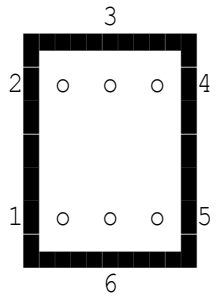

Type 2

(bar dia =29.468 mm
and Asb =682.03 mm²)

Steel area provided Astot=num*PI*diac^2/4=4092.2 mm²
Steel percentage provided perct=100*Astot/(h*b)=1.3641 %
Distances to Bar 1 x=-242.27 mm=-192.27 mm
Strain at bar e=0.0035-curvx*(h/2-y)-curvy*(b/2-x)
=-0.0013062
Steel is elastic, force f=Asb*e*200=-178.17 kN

Similar calculations for remaining bars are summarised as follows:

Bar No.	Strain	Force (kN)	mx (kNm)	my (kNm)
1	-0.0013062	-178.17	34.256	43.165
2	0.92674E-3	126.41	24.305	-30.626
3	0.0019266	262.8	50.528	0
4	0.0029265	296.54	57.014	71.84
5	0.69354E-3	94.603	-18.189	22.919
6	-0.30632E-3	-41.784	8.0337	0

Summing forces and moments for all elements and bars gives

Calculated axial force Nc=3177.9 kN
Moment about x-x axis Mcx=317.62 kNm
Moment about y-y axis Mcy=263.54 kNm

SUMMARY (fcu=30 N/mm² : fy=500 N/mm²)

(Note: 'microstrain' = true strain multiplied by 1,000,000.)

Section chosen (bars in top and bottom faces only)

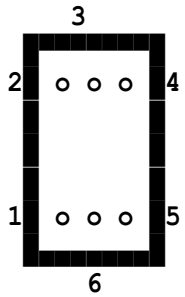

Depth of section h=500 mm
Breadth of section b=600 mm

Equiv.bar diameter=29.468 mm

Steel percentage required 1.3641 %
Steel percentage provided 1.3641 %
Provide the equivalent of 6 No. 29.468 mm bars
Total steel area required 4092.2 mm²
Total steel area provided 4092.2 mm²
Cover to all reinforcement 35 mm
Strain at corner Bar 1 -1306.2 microstrain (tension -ve)
Strain at top right corner 3500 microstrain
Strain at top left corner 1023.7 microstrain

Forces and moments:	Required	Provided	Excess (%)
Axial load in kN	3000	3177.9	5.9
Moment about X-X axis in kNm	300	317.62	5.8
Moment about Y-Y axis in kNm	250	263.54	5.4

The above result is judged acceptable.

Location: Square column reinforced with mild steel

Design of rectangular section under biaxial bending and axial load

(rigorous procedure using trial and error)

Design to BS8110(1997), partial safety factor for steel gammaS=1.15
Calculations are based on assumptions given in BS 8110. Solution is by trial and error, with check calculations printed out below. The concrete section is divided into 25 elements of equal area.

Moments must be applied to give tension in lower left corner, with dominant moment about X-X axis.

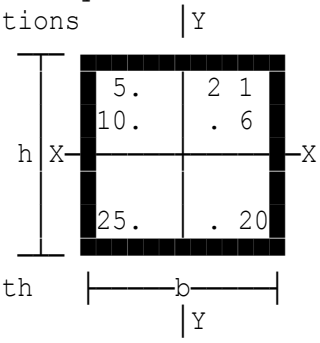

Ult.conditions governed by conc. strain of 0.0035 @ top right corner or steel strain of 0.02 at lower left corner.

Design axial load	N=1000 kN
Design moment about X-X axis	Mx=200 kNm
Design moment about Y-Y axis	My=150 kNm
Depth of section	h=500 mm
Breadth of section	b=500 m
Size of links	dial=8 mm
Characteristic conc strength	fcu=50 N/mm²
Characteristic steel strength	fy=250 N/mm²
Designated exposure class is XC3	
Specified fixing tolerance	tol=10 mm
Nominal cover to all steel	cover=30 mm

Element strains, forces, and contributions to mts about x-x and y-y

```
                                  y
   ┌──────────────────────────────────────────────────────────────────────┐
   │                                |
   │  e=-0.60871E-3 0.18522E-3  0.97915E-3  0.0017731   0.002567          │
   │  f=0           55.383      202.89      222         222               │
   │ mx=0           11.077      40.579      44.4        44.4              │
   │ my=0           -5.5383     0           22.2        44.4              │
   │                                |
   │                                |
   │    -0.0016808  -0.88684E-3 -92.913E-6  0.70102E-3  0.0014949         │
   │    0           0           0           167.81      222               │
   │    0           0           0           16.781      22.2              │
   │    0           0           0           16.781      44.4              │
   │                                |
   │                                |
   │    -0.0027528  -0.0019589  -0.001165   -0.37104E-3 0.42289E-3        │
x─ │ ── 0       ── 0       ── 0       ── 0       ── 114.83    ── │─x
   │    0           0           0           0           0                 │
   │    0           0           0           0           22.966            │
   │                                |
   │                                |
   │    -0.0038249  -0.003031   -0.002237   -0.0014431  -0.64917E-3      │
   │    0           0           0           0           0                 │
   │    0           0           0           0           0                 │
   │    0           0           0           0           0                 │
   │                                |
   │                                |
   │    -0.004897   -0.004103   -0.0033091  -0.0025152  -0.0017212       │
   │    0           0           0           0           0                 │
   │    0           0           0           0           0                 │
   │    0           0           0           0           0                 │
   │                                |
   └──────────────────────────────────────────────────────────────────────┘
                                  y
```

Calculation of strains and forces in steel areas

Steel arrangement:

```
                    4
                 ┌─────┐
                3│ o o o│5
Type 4          2│ o   o│6   (bar dia =17.252 mm
                 │      │     and Asb =233.77 mm² )
                1│ o o o│7
                 └─────┘
                    8
```

Steel area provided Astot=num*PI*diac^2/4=1870.2 mm²
Steel percentage provided perct=100*Astot/(h*b)=0.74807 %
Distances to Bar 1 x=-203.37 mm=-203.37 mm
Strain at bar e=0.0035-curvx*(h/2-y)-curvy*(b/2-x)
=-0.0049599
Steel is plastic, force f=-Asb*fy/(gammaS*1E3)=-50.82 kN

Similar calculations for remaining bars are summarised as follows:

Bar No.	Strain	Force (kN)	mx (kNm)	my (kNm)
1	-0.0049599	-50.82	10.335	10.335
2	-0.0027796	-50.82	0	10.335
3	-0.59933E-3	-28.021	-5.6988	5.6988
4	0.0010153	47.471	9.6543	0
5	0.00263	50.82	10.335	10.335
6	0.44967E-3	21.024	0	4.2758
7	-0.0017306	-50.82	10.335	-10.335
8	-0.0033453	-50.82	10.335	0

Summing forces and moments for all elements and bars gives

Calculated axial force Nc=1094.9 kN
Moment about x-x axis Mcx=224.73 kNm
Moment about y-y axis Mcy=175.85 kNm

SUMMARY (fcu=50 N/mm² : fy=250 N/mm²)

(Note: 'microstrain' = true strain multiplied by 1,000,000.)

Section chosen (same bars in all faces)

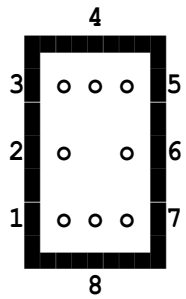

Depth of section h=500 mm
Breadth of section b=500 mm

Equiv.bar diameter=17.252 mm

Steel percentage required 0.74807 %
Steel percentage provided 0.74807 %
Provide the equivalent of 8 No. 17.252 mm bars
Total steel area required 1870.2 mm²
Total steel area provided 1870.2 mm²
Cover to all reinforcement 30 mm
Strain at corner Bar 1 -4959.9 microstrain (tension -ve)
Strain at top right corner 3500 microstrain
Strain at top left corner -469.65 microstrain

Forces and moments:	Required	Provided	Excess (%)
Axial load in kN	1000	1094.9	9.4
Moment about X-X axis in kNm	200	224.73	12.3
Moment about Y-Y axis in kNm	150	175.85	17.2

The above result is judged acceptable.

Location: Column with low axial load

Design of rectangular section under biaxial bending and axial load

(rigorous procedure using trial and error)

Design to BS8110(1997), partial safety factor for steel gammaS=1.15
Calculations are based on assumptions given in BS 8110. Solution is by trial and error, with check calculations printed out below. The concrete section is divided into 25 elements of equal area.

Moments must be applied to give tension in lower left corner, with dominant moment about X-X axis.

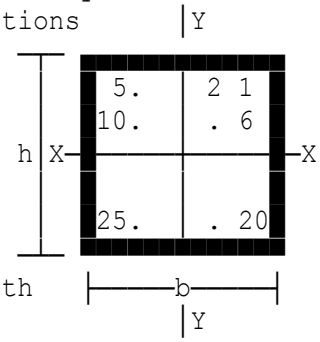

Ult.conditions governed by conc. strain of 0.0035 @ top right corner or steel strain of 0.02 at lower left corner.

Design axial load	N=100 kN
Design moment about X-X axis	Mx=350 kNm
Design moment about Y-Y axis	My=350 kNm
Depth of section	h=550 mm
Breadth of section	b=550 m
Size of links	dial=10 mm
Characteristic conc strength	fcu=35 N/mm²
Characteristic steel strength	fy=500 N/mm²
Nominal cover to all steel	cover=30 mm

Element strains, forces, and contributions to mts about x-x and y-y

y

e=-0.0012505	-0.30037E-3	0.64973E-3	0.0015998	0.0025499
f=0	0	151.7	188.03	188.03
mx=0	0	33.375	41.367	41.367
my=0	0	0	20.684	41.367
-0.0022005	-0.0012505	-0.30037E-3	0.64973E-3	0.0015998
0	0	0	151.7	188.03
0	0	0	16.687	20.684
0	0	0	16.687	41.367
-0.0031506	-0.0022005	-0.0012505	-0.30037E-3	0.64973E-3
0	0	0	0	151.7
0	0	0	0	0
0	0	0	0	33.375
-0.0041007	-0.0031506	-0.0022005	-0.0012505	-0.30037E-3
0	0	0	0	0
0	0	0	0	0
0	0	0	0	0
-0.0050508	-0.0041007	-0.0031506	-0.0022005	-0.0012505
0	0	0	0	0
0	0	0	0	0
0	0	0	0	0

x ← → x

y

Calculation of strains and forces in steel areas

Steel arrangement:

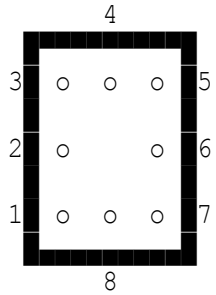

Type 4 (bar dia =32.407 mm and Asb =824.83 mm²)

Steel area provided Astot=num*PI*diac^2/4=6598.6 mm²
Steel percentage provided perct=100*Astot/(h*b)=2.1814 %
Distances to Bar 1 x=-218.8 mmy=-218.8 mm
Strain at bar e=0.0035-curvx*(h/2-y)-curvy*(b/2-x)
=-0.00503
Steel is plastic, force f=-Asb*fy/(gammaS*1E3)=-358.62 kN

Similar calculations for remaining bars are summarised as follows:

Bar No.	Strain	Force (kN)	mx (kNm)	my (kNm)
1	-0.00503	-358.62	78.465	78.465
2	-0.0031402	-358.62	0	78.465
3	-0.0012505	-206.28	-45.134	45.134
4	0.63933E-3	105.47	23.076	0
5	0.0025291	358.62	78.465	78.465
6	0.63933E-3	105.47	0	23.076
7	-0.0012505	-206.28	45.134	-45.134
8	-0.0031402	-358.62	78.465	0

Summing forces and moments for all elements and bars gives

Calculated axial force Nc=100.34 kN
Moment about x-x axis Mcx=411.95 kNm
Moment about y-y axis Mcy=411.95 kNm

SUMMARY (fcu=35 N/mm² : fy=500 N/mm²)

(Note: 'microstrain' = true strain multiplied by 1,000,000.)

Section chosen (same bars in all faces)

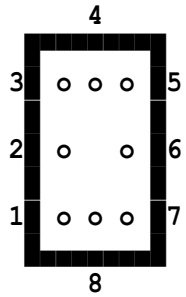

Depth of section h=550 mm
Breadth of section b=550 mm

Equiv.bar diameter=32.407 mm

Steel percentage required 2.1814 %
Steel percentage provided 2.1814 %
Provide the equivalent of 8 No. 32.407 mm bars
Total steel area required 6598.6 mm²
Total steel area provided 6598.6 mm²
Cover to all reinforcement 30 mm
Strain at corner Bar 1 -5030 microstrain (tension -ve)
Strain at top right corner 3500 microstrain
Strain at top left corner -1250.5 microstrain

Forces and moments:	Required	Provided	Excess (%)
Axial load in kN	100	100.34	0.3
Moment about X-X axis in kNm	350	411.95	17.7
Moment about Y-Y axis in kNm	350	411.95	17.7

The above result is judged acceptable.

Location: Column with biaxial bending and substantial axial load

Design of rectangular section under biaxial bending and axial load

(rigorous procedure using trial and error)

Calculations are based on assumptions given in EC2. Solution is by trial and error, with check calculations printed out below. The concrete section is divided into 25 elements of equal area.

Moments must be applied to give tension in lower left corner, with dominant moment about Y-Y axis.

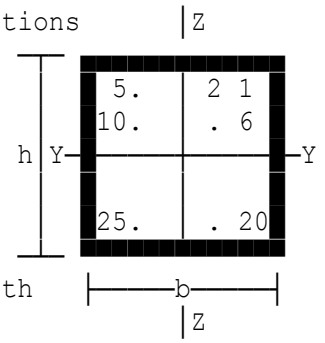

Ult.conditions governed by conc. strain of 0.0035 @ top right corner or steel strain of 0.02 at lower left corner.

Design axial load	N=3000 kN
Design moment about Y-Y axis	My=300 kNm
Design moment about Z-Z axis	Mz=250 kNm
Depth of section	h=500 mm
Breadth of section	b=600 m
Partial safety factor for steel	gams=1.15
Characteristic steel strength	fyk=500 N/mm²
Diameter of longitudinal reinft.	dia=32 mm
Diameter of column links	dial=8 mm

```
                                   z
   ┌──────────────────────────────────────────────────────────────────────┐
   │                                 |
   │  e=0.0012502   0.0016823   0.0021144   0.0025465   0.0029787
   │  f=137.38      155.81      159.84      159.84      159.84
   │ my=27.475      31.161      31.968      31.968      31.968
   │ mz=-32.97      -18.697     0           19.181      38.362
   │                                 |
   │                                 |
   │    0.63963E-3  0.0010717   0.0015038   0.001936    0.0023681
   │    85.89       125.41      150         159.68      159.84
   │    8.589       12.541      15          15.968      15.984
   │    -20.614     -15.049     0           19.161      38.362
   │                                 |
   │                                 |
   │    29.045E-6   0.46115E-3  0.89326E-3  0.0013254   0.0017575
y─ │ ── 4.6088  ──  65.213  ──  110.89  ──  141.65  ──  157.49    ──  │─y
   │    0           0           0           0           0
   │    -1.1061     -7.8256     0           16.998      37.798
   │                                 |
   │                                 |
   │    -0.58154E-3 -0.14943E-3 0.28268E-3  0.71479E-3  0.0011469
   │    0           0           41.99       93.835      130.76
   │    0           0           -4.199      -9.3835     -13.076
   │    0           0           0           11.26       31.382
   │                                 |
   │                                 |
   │    -0.0011921  -0.76001E-3 -0.3279E-3  0.10421E-3  0.53631E-3
   │    0           0           0           16.222      74.231
   │    0           0           0           -3.2444     -14.846
   │    0           0           0           1.9467      17.815
   │                                 |
   └──────────────────────────────────────────────────────────────────────┘
                                   z
```

Calculation of strains and forces in steel areas

Steel arrangement:

```
                    4
                 ┌──────┐
                3│ o  o  o│5
                 │        │
       Type 4   2│ o     o│6   bar dia =28.347 mm
                 │        │    and Asb =631.09 mm²
                1│ o  o  o│7
                 └──────┘
                    8
```

Steel area provided	Astot=num*PI*diac^2/4=5048.7 mm²
Steel percentage provided	perct=100*Astot/(h*b)=1.6829 %
Distances to Bar 1	y=-231.83 mm z=-181.83 mm
Strain at bar	e=0.0035-curvy*(h/2-z)-curvz*(b/2-y) =-0.0010517
Steel is elastic, force	f=Asb*e*200=-132.75 kN

Similar calculations for remaining bars are summarised as follows:

Bar No.	Strain	Force (kN)	my (kNm)	mz (kNm)
1	-0.0010517	-132.75	24.137	30.774
2	58.476E-6	7.3808	0	-1.7111
3	0.0011687	147.51	26.821	-34.197
4	0.0020035	252.87	45.979	0
5	0.0028383	274.39	49.891	63.611
6	0.0017281	218.11	0	50.564
7	0.61785E-3	77.984	-14.179	18.079
8	-0.21694E-3	-27.382	4.9788	0

Summing forces and moments for all elements and bars gives

Calculated axial force Nc=3108.5 kN
Moment about y-y axis Mcy=315.5 kNm
Moment about z-z axis Mcz=263.12 kNm

SUMMARY (fck=25 N/mm² : fyk=500 N/mm²)

(Note: 'microstrain' = true strain multiplied by 1,000,000.)
Steel percentage required 1.6829 %
Steel percentage provided 1.6829 %
Provide the equivalent of 8 No. 28.347 mm diameter bars
Total steel area required 5048.7 mm²
Total steel area provided 5048.7 mm²
Cover to all reinforcement 46 mm
Strain at corner Bar 1 -1051.7 microstrain (tension -ve)
Strain at top right corner 3500 microstrain
Strain at top left corner 1339.5 microstrain

Forces and moments:	required	provided	excess (%)
Axial load in kN	3000	3108.5	3.6
Moment about Y-Y axis in kNm	300	315.5	5.1
Moment about Z-Z axis in kNm	250	263.12	5.2

The above result is judged acceptable.

Location: Square column reinforced with mild steel

Design of rectangular section under biaxial bending and axial load

(rigorous procedure using trial and error)

Calculations are based on assumptions given in EC2. Solution is by trial and error, with check calculations printed out below. The concrete section is divided into 25 elements of equal area.

Moments must be applied to give tension in lower left corner, with dominant moment about Y-Y axis.

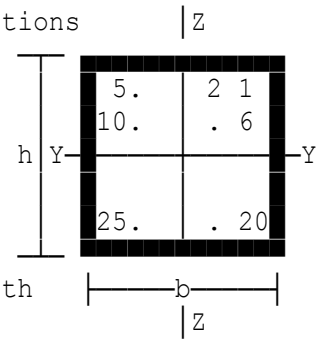

Ult.conditions governed by conc. strain of 0.0035 @ top right corner or steel strain of 0.02 at lower left corner.

Design axial load	N=1000 kN
Design moment about Y-Y axis	My=200 kNm
Design moment about Z-Z axis	Mz=150 kNm
Depth of section	h=500 mm
Breadth of section	b=500 m
Partial safety factor for steel	gams=1.15
Characteristic steel strength	fyk=500 N/mm²
Diameter of longitudinal reinft.	dia=16 mm
Diameter of column links	dial=8 mm

```
                                   z
   ┌──────────────────────────────────────────────────────────────────────┐
   │                                |
   │  e=-0.21885E-3 0.50132E-3  0.0012215   0.0019417   0.0026618          │
   │  f=0           97.345      188.36      221.81      222               │
   │ my=0           19.469      37.673      44.362      44.4              │
   │ mz=0           -9.7345     0           22.181      44.4              │
   │                                |                                      │
   │                                |                                      │
   │    -0.001175   -0.45484E-3 0.26533E-3  0.9855E-3   0.0017057         │
   │    0           0           54.996      164.88      217.19            │
   │    0           0           5.4996      16.488      21.719            │
   │    0           0           0           16.488      43.438            │
   │                                |                                      │
   │                                |                                      │
   │    -0.0021312  -0.001411   -0.69084E-3 29.336E-6   0.74951E-3        │
y─ │ ── 0       ── 0       ── 0       ── 6.4647  ── 135.21    ── │─y
   │    0           0           0           0           0                 │
   │    0           0           0           0.64647     27.043            │
   │                                |                                      │
   │                                |                                      │
   │    -0.0030873  -0.0023672  -0.001647   -0.92683E-3 -0.20666E-3       │
   │    0           0           0           0           0                 │
   │    0           0           0           0           0                 │
   │    0           0           0           0           0                 │
   │                                |                                      │
   │                                |                                      │
   │    -0.0040435  -0.0033233  -0.0026032  -0.001883   -0.0011628        │
   │    0           0           0           0           0                 │
   │    0           0           0           0           0                 │
   │    0           0           0           0           0                 │
   │                                |                                      │
   └──────────────────────────────────────────────────────────────────────┘
                                   z
```

Calculation of strains and forces in steel areas

Steel arrangement:

```
                    4
                 ┌──────┐
                3│ o  o  o│5
                 │        │
       Type 4   2│ o     o│6   bar dia =15.261 mm
                 │        │    and Asb =182.91 mm²
                1│ o  o  o│7
                 └──────┘
                    8
```

Steel area provided	Astot=num*PI*diac^2/4=1463.3 mm²
Steel percentage provided	perct=100*Astot/(h*b)=0.5853 %
Distances to Bar 1	y=-179.37 mm z=-179.37 mm
Strain at bar	e=0.0035-curvy*(h/2-z)-curvz*(b/2-y) =-0.0036977
Steel is plastic, force	f=-Asb*fyk/(gams*1E3)=-79.525 kN

Similar calculations for remaining bars are summarised as follows:

Bar No.	Strain	Force (kN)	my (kNm)	mz (kNm)
1	-0.0036977	-79.525	14.264	14.264
2	-0.0019826	-72.527	0	13.009
3	-0.26754E-3	-9.7869	-1.7555	1.7555
4	0.0010242	37.468	6.7206	0
5	0.002316	79.525	14.264	14.264
6	0.60093E-3	21.983	0	3.9431
7	-0.0011141	-40.757	7.3105	-7.3105
8	-0.0024059	-79.525	14.264	0

Summing forces and moments for all elements and bars gives

Calculated axial force Nc=1206.5 kN
Moment about y-y axis Mcy=244.68 kNm
Moment about z-z axis Mcz=184.39 kNm

SUMMARY (fck=40 N/mm² : fyk=500 N/mm²)

(Note: 'microstrain' = true strain multiplied by 1,000,000.)
Steel percentage required 0.5853 %
Steel percentage provided 0.5853 %
Provide the equivalent of 8 No. 15.261 mm diameter bars
Total steel area required 1463.3 mm²
Total steel area provided 1463.3 mm²
Cover to all reinforcement 55 mm
Strain at corner Bar 1 -3697.7 microstrain (tension -ve)
Strain at top right corner 3500 microstrain
Strain at top left corner -100.86 microstrain

Forces and moments:	required	provided	excess (%)
Axial load in kN	1000	1206.5	20.6
Moment about Y-Y axis in kNm	200	244.68	22.3
Moment about Z-Z axis in kNm	150	184.39	22.9

The above result is judged acceptable.

Location: Column with low axial load

Design of rectangular section under biaxial bending and axial load

(rigorous procedure using trial and error)

Calculations are based on assumptions given in EC2. Solution is by trial and error, with check calculations printed out below. The concrete section is divided into 25 elements of equal area.

Moments must be applied to give tension in lower left corner, with dominant moment about Y-Y axis.

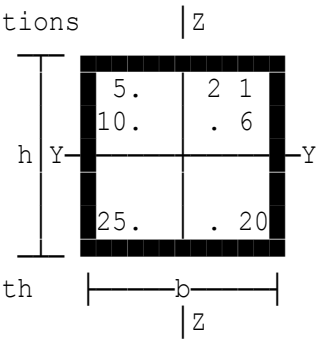

Ult.conditions governed by conc. strain of 0.0035 @ top right corner or steel strain of 0.02 at lower left corner.

Design axial load	N=100 kN
Design moment about Y-Y axis	My=350 kNm
Design moment about Z-Z axis	Mz=350 kNm
Depth of section	h=550 mm
Breadth of section	b=550 m
Partial safety factor for steel	gams=1.15
Characteristic steel strength	fyk=500 N/mm²
Diameter of column links	dial=10 mm
Nominal cover to all steel	cover=30 mm

```
                                   z
   ┌──────────────────────────────────────────────────────────────────────────┐
   │                                |
   │  e=-0.92653E-3 -41.228E-6  0.84408E-3  0.0017294   0.0026147
   │  f=0           0           107.33      158.22      161.17
   │ my=0           0           23.614      34.809      35.458
   │ mz=0           0           0           17.404      35.458
   │                                |
   │                                |
   │    -0.0018118  -0.92653E-3 -41.228E-6  0.84408E-3  0.0017294
   │    0           0           0           107.33      158.22
   │    0           0           0           11.807      17.404
   │    0           0           0           11.807      34.809
   │                                |
   │                                |
   │    -0.0026971  -0.0018118  -0.92653E-3 -41.228E-6  0.84408E-3
y─ │ ── 0       ── 0       ── 0       ── 0       ── 107.33    ── │─y
   │    0           0           0           0           0
   │    0           0           0           0           23.614
   │                                |
   │                                |
   │    -0.0035825  -0.0026971  -0.0018118  -0.92653E-3 -41.228E-6
   │    0           0           0           0           0
   │    0           0           0           0           0
   │    0           0           0           0           0
   │                                |
   │                                |
   │    -0.0044678  -0.0035825  -0.0026971  -0.0018118  -0.92653E-3
   │    0           0           0           0           0
   │    0           0           0           0           0
   │    0           0           0           0           0
   │                                |
   └──────────────────────────────────────────────────────────────────────────┘
                                   z
```

Calculation of strains and forces in steel areas

Steel arrangement:

```
                    4
                  ┌──────┐
                3 │o  o  o│ 5
                  │       │
      Type 4    2 │o     o│ 6   bar dia =32.472 mm
                  │       │     and Asb =828.17 mm²
                1 │o  o  o│ 7
                  └──────┘
                    8
```

Steel area provided	Astot=num*PI*diac^2/4=6625.3 mm²
Steel percentage provided	perct=100*Astot/(h*b)=2.1902 %
Distances to Bar 1	y=-218.76 mm z=-218.76 mm
Strain at bar	e=0.0035-curvy*(h/2-z)-curvz*(b/2-y) =-0.0044479
Steel is plastic, force	f=-Asb*fyk/(gams*1E3)=-360.07 kN

Similar calculations for remaining bars are summarised as follows:

Bar No.	Strain	Force (kN)	my (kNm)	mz (kNm)
1	-0.0044479	-360.07	78.771	78.771
2	-0.0026872	-360.07	0	78.771
3	-0.92653E-3	-153.47	-33.573	33.573
4	0.83413E-3	138.16	30.224	0
5	0.0025948	360.07	78.771	78.771
6	0.83413E-3	138.16	0	30.224
7	-0.92653E-3	-153.47	33.573	-33.573
8	-0.0026872	-360.07	78.771	0

Summing forces and moments for all elements and bars gives

Calculated axial force Nc=111.31 kN
Moment about y-y axis Mcy=389.63 kNm
Moment about z-z axis Mcz=389.63 kNm

SUMMARY (fck=25 N/mm² : fyk=500 N/mm²)

(Note: 'microstrain' = true strain multiplied by 1,000,000.)
Steel percentage required 2.1902 %
Steel percentage provided 2.1902 %
Provide the equivalent of 8 No. 32.472 mm diameter bars
Total steel area required 6625.3 mm²
Total steel area provided 6625.3 mm²
Cover to all reinforcement 30 mm
Strain at corner Bar 1 -4447.9 microstrain (tension -ve)
Strain at top right corner 3500 microstrain
Strain at top left corner -926.53 microstrain

Forces and moments:	required	provided	excess (%)
Axial load in kN	100	111.31	11.3
Moment about Y-Y axis in kNm	350	389.63	11.3
Moment about Z-Z axis in kNm	350	389.63	11.3

The above result is judged acceptable.

Location: Typical circular column

Design of circular column section to BS8110

Design to BS8110(1997), partial safety factor for steel gammaS=1.15

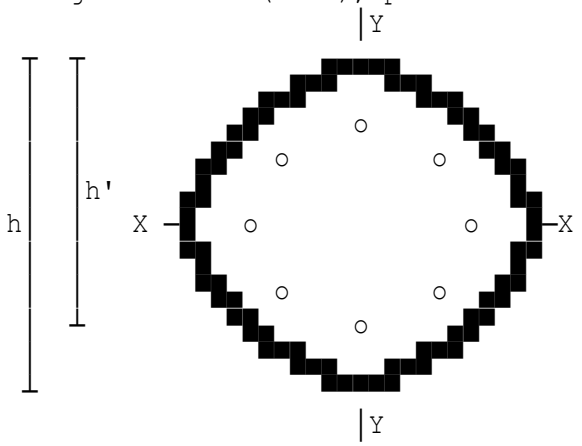

Calculations for reinforcement are in accordance with BS 8110 and the IStructE/ICE 'Manual for the design of reinforced concrete building structures'. Min. steel = six bars arranged symmetrically. Any greater number of bars (eight shown) increases resistance moment of section.

Design ultimate moment	M=91 kNm
Shear force	F=0 kN
Design ultimate axial load	N=2000 kN
Clear height	lo=3 m
Fixity condition at top (1-4)	FixT=1
Fixity condition at bottom (1-3)	FixB=1
Diameter of cross-section	h=350 mm
Concrete grade	fcu=35 N/mm²
Characteristic steel strength	fy=500 N/mm²
Designated exposure class is XC2	
Specified fixing tolerance	tol=10 mm
Cover to all reinforcement	cover=35 mm
Effective depth	h'=290 mm
Main steel diameter	dia=16 mm
Number of bars to be provided	NumBar=18
Chosen diameter of links	Diam=8 mm

SUMMARY OF REINFORCEMENT

VERTICAL REINFORCEMENT SUMMARY	**Characteristic strength**	**500 N/mm²**
	Number of bars	**18**
	Diameter of bars	**16 mm**
	Area of steel required	**3590.9 mm²**
	Area of steel provided	**3619.1 mm²**
	Percentage provided	**3.7616 %**
	Volume of main bars	**3619.1 cm³/m**
	Weight of main bars	**28.41 kg/m**
LINK REINFORCEMENT SUMMARY	**Characteristic strength**	**500 N/mm²**
	Diameter of links	**8 mm**
	Spacing	**190 mm**
	Volume of links (approx)	**258.11 cm³/m**
	Weight of links (approx)	**2.0262 kg/m**
	Total weight of steel	**30.436 kg/m**

According to Cl 3.12.7.3 of BS8110, circular links or spiral reinforcement passing round all bars provide adequate lateral support in circular columns.

Location: Small-diameter circular column subjected to heavy load

Design of circular column section to BS8110

Design to BS8110(1997), partial safety factor for steel gammaS=1.15

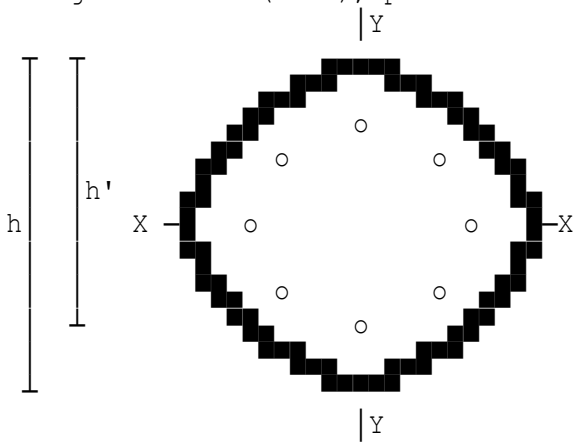

Calculations for reinforcement are in accordance with BS 8110 and the IStructE/ICE 'Manual for the design of reinforced concrete building structures'. Min. steel = six bars arranged symmetrically. Any greater number of bars (eight shown) increases resistance moment of section.

Design ultimate moment	M=125 kNm
Shear force	F=100 kN
Design ultimate axial load	N=1750 kN
Clear height	lo=0 m
Fixity condition at top (1-4)	FixT=1
Fixity condition at bottom (1-3)	FixB=1
Diameter of cross-section	h=300 mm
Concrete grade	fcu=60 N/mm²
Characteristic steel strength	fy=500 N/mm²
Designated exposure class is XC1	
Specified fixing tolerance	tol=10 mm
Cover to all reinforcement	cover=25 mm
Effective depth	h'=259.5 mm
Main steel diameter	dia=20 mm
Number of bars to be provided	NumBar=12
Chosen diameter of links	Diam=8 mm

WARNING:
Cover is less than minimum specified. For cover of 25 mm, main steel of 20 mm and h' equal to 259.5 mm, diameter of links cannot exceed 5.5 mm.
Reduce effective depth to 257 mm (maximum).

Location: Massive lightly-loaded column reinforced with mild steel

Design of circular column section to BS8110

Design to BS8110(1997), partial safety factor for steel gammaS=1.15

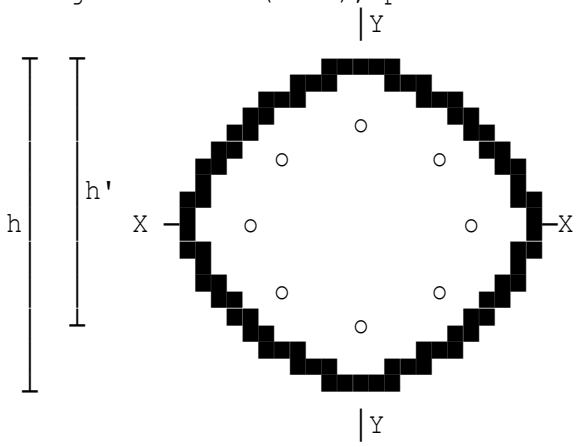

Calculations for reinforcement are in accordance with BS 8110 and the IStructE/ICE 'Manual for the design of reinforced concrete building structures'. Min. steel = six bars arranged symmetrically. Any greater number of bars (eight shown) increases resistance moment of section.

Design ultimate moment	M=10 kNm
Shear force	F=1000 kN
Design ultimate axial load	N=100 kN
Clear height	lo=20 m
Fixity condition at top (1-4)	FixT=3
Fixity condition at bottom (1-3)	FixB=2
Diameter of cross-section	h=2000 mm
Concrete grade	fcu=30 N/mm²
Characteristic steel strength	fy=250 N/mm²
Designated exposure class is XC1	
Specified fixing tolerance	tol=10 mm
Cover to all reinforcement	cover=25 mm
Effective depth	h'=1900 mm
Main steel diameter	dia=20 mm
Number of bars to be provided	NumBar=40
Chosen diameter of links	Diam=10 mm

SUMMARY OF REINFORCEMENT

VERTICAL REINFORCEMENT SUMMARY	**Characteristic strength**	**250 N/mm²**
	Number of bars	**40**
	Diameter of bars	**20 mm**
	Area of steel required	**12566 mm²**
	Area of steel provided	**12566 mm²**
	Percentage provided	**0.4 %**
	Volume of main bars	**12566 cm³/m**
	Weight of main bars	**98.646 kg/m**
LINK REINFORCEMENT SUMMARY	**Characteristic strength**	**250 N/mm²**
	Diameter of links	**10 mm**
	Spacing	**240 mm**
	Volume of links (approx)	**2044 cm³/m**
	Weight of links (approx)	**16.046 kg/m**
	Total weight of steel	**114.69 kg/m**

According to Cl 3.12.7.3 of BS8110, circular links or spiral reinforcement passing round all bars provide adequate lateral support in circular columns.

Location: EX1 - Typical circular column

Design of circular column section to EC2

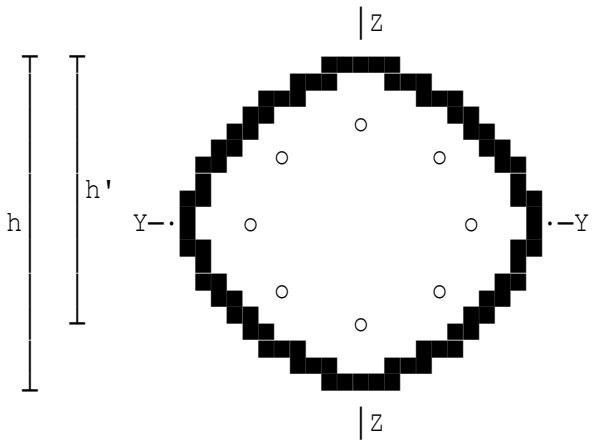

Reinforcement calculations are in accordance with EC2 Part 1-1 and the IStructE 'Manual for the design of concrete building structures to Eurocode 2'. Min.steel = six bars arranged symmetrically. Any greater number of bars (eight shown) increases resistance moment of section.

Larger initial end moment (+ve)	M2=110 kNm
Smaller initial end moment	M1=0 kNm
Design ultimate axial load	NEd=2000 kN
Design ultimate shear force	VEd=0 kN
Diameter of cross-section	h=375 mm
Partial safety factor for steel	gams=1.15
Partial safety factor for conc.	gamc=1.5
Clear height of column	l=3 m
Char yield strength of reinf'ment	fyk=500 N/mm²
Diameter of longitudinal reinft.	dia=20 mm
Diameter of column links	dial=8 mm
Effective depth	h'=300 mm

Slenderness - EC2 Clause 5.8.3.2

About Y-Y axis:
Column is considered to be braced about the stronger axis.
Effective height loy=bety*l*1000=2250 mm
About Z-Z axis:
Column is considered to be braced about the weaker axis.
Effective height loz=betz*l*1000=2250 mm

Check slenderness

For Y-Y stronger axis:
Slenderness lamy=loy/iy=24
Limiting slenderness lamly=20*A*B*C/n^0.5=39.743
Column is classified as being short in accordance with EC2 Part 1-1.

For Z-Z weaker axis:
Slenderness lamz=loz/iz=24
Limiting slenderness lamlz=20*A*B*C/n^0.5=39.743
Column is classified as being short in accordance with EC2 Part 1-1.

Design moments - Clause 5.8.8.2

Design moment (y-y axis) MEd=Mo2*10^-6=121.25 kNm

Axial load and moment considerations

Effective/overall-depth ratio d'h=h'/h=0.8
Axial load ratio Nrat=NEd*1000/(h^2*fck)=0.50794
Moment ratio Mrat=MEd*10^6/(h^3*fck)=0.082116

Longitudinal reinforcement

Chart data for circular columns is taken from 'The Concrete Centre' publication entitled 'Worked Examples to Eurocode 2: Volume 1'. The program initially evaluates the area of reinforcement taking K=1. The value of Nu and hence a new value of K is then determined leading to a reduced area of reinforcement. This process is then repeated until the minimum area of reinforcement is found. For further guidance refer to the IStrucE Manual to EC2, Section 5.5.4.3.
Calculated area of reinforcement Asc=val*fck/fyk*h^2=4181.2 mm²
Main steel diameter dia=20 mm
Number of bars to be provided NumBar=14

Transverse reinforcement (links)

Chosen diameter of links dial=8 mm
Maximum spacing smx=375 mm

SUMMARY OF REINFORCEMENT

VERTICAL	**Characteristic strength**	**500 N/mm²**
REINFORCEMENT	**Number of bars**	**14**
SUMMARY	**Diameter of bars**	**20 mm**
	Area of steel required	**4181.2 mm²**
	Area of steel provided	**4398.2 mm²**
	Percentage provided	**3.9822 %**
	Weight of main bars	**34.526 kg/m**
LINK	**Characteristic strength**	**500 N/mm²**
REINFORCEMENT	**Diameter of links**	**8 mm**
SUMMARY	**Spacing**	**375 mm**
	Weight of links (approx)	**7.9931 kg/m**
	Total weight of steel	**42.519 kg/m**

NOTE: Circular links or spiral reinforcement passing round all bars provide adequate lateral support in circular columns.

Check for biaxial bending - EC2 Clause 5.8.9

Eccentricity due to imperfections about the weaker axis will be ignored as this was considered about the stronger axis. The calculations below will consider first order and second order moments about z-z axis only.

Design ultimate moment (if any) Mo2z=0 kNm
Column is not slender about z-z axis and second order moments are not required to be evaluated.
Design ultimate moment (z-z axis) MEdz=Mo2z*10^6=40E6 Nmm

DESIGN SUMMARY	**Clear column height**	**3 m**
	Slenderness (Y-Y axis)	**24**
	Slenderness (Z-Z axis)	**24**
	Design axial load	**2000 kN**
	Design bending moments:	
	Y-Y axis	**121.25 kNm**
	Z-Z axis	**40 kNm**
	Resistance moment (Y-Y)	**146.87 kNm**
	Resistance moment (Z-Z)	**146.87 kNm**
	Biaxial bending factor	**0.75568**

Location: Ex2 - Small-diameter circular column subj. to heavy load

Design of circular column section to EC2

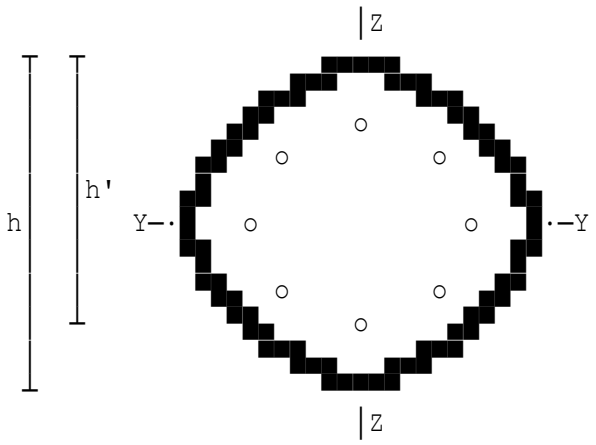

Reinforcement calculations are in accordance with EC2 Part 1-1 and the IStructE 'Manual for the design of concrete building structures to Eurocode 2'. Min.steel = six bars arranged symmetrically. Any greater number of bars (eight shown) increases resistance moment of section.

Larger initial end moment (+ve)	M2=125 kNm
Smaller initial end moment	M1=0 kNm
Design ultimate axial load	NEd=1750 kN
Design ultimate shear force	VEd=100 kN
Diameter of cross-section	h=400 mm
Partial safety factor for steel	gams=1.15
Partial safety factor for conc.	gamc=1.5
Clear height of column	l=4 m
Char yield strength of reinf'ment	fyk=500 N/mm²
Diameter of longitudinal reinft.	dia=20 mm
Diameter of column links	dial=8 mm
Effective depth	h'=337 mm

Slenderness - EC2 Clause 5.8.3.2

About Y-Y axis:
Column is considered to be braced about the stronger axis.
Effective height loy=bety*l*1000=3000 mm
About Z-Z axis:
Column is considered to be braced about the weaker axis.
Effective height loz=betz*l*1000=3000 mm

Check slenderness

For Y-Y stronger axis:
Slenderness lamy=loy/iy=30
Limiting slenderness lamly=20*A*B*C/n^0.5=43.126
Column is classified as being short in accordance with EC2 Part 1-1.

For Z-Z weaker axis:
Slenderness lamz=loz/iz=30
Limiting slenderness lamlz=20*A*B*C/n^0.5=43.126
Column is classified as being short in accordance with EC2 Part 1-1.

Design moments - Clause 5.8.8.2

Design moment (y-y axis) MEd=Mo2*10^-6=138.13 kNm

Axial load and moment considerations

Effective/overall-depth ratio d'h=h'/h=0.8425
Axial load ratio Nrat=NEd*1000/(h^2*fck)=0.21875
Moment ratio Mrat=MEd*10^6/(h^3*fck)=0.043164

Longitudinal reinforcement

Chart data for circular columns is taken from 'The Concrete Centre' publication entitled 'Worked Examples to Eurocode 2: Volume 1'. The program initially evaluates the area of reinforcement taking K=1. The value of Nu and hence a new value of K is then determined leading to a reduced area of reinforcement. This process is then repeated until the minimum area of reinforcement is found. For further guidance refer to the IStrucE Manual to EC2, Section 5.5.4.3.
Calculated area of reinforcement Asc=val*fck/fyk*h^2=0 mm²
Main steel diameter dia=12 mm
Number of bars to be provided NumBar=6

Shear in column

Shear resistance:
VRdc=(CRdc*ks*vRdc+0.15*NEd*1000/Ac)*bw*d/1000=365.51 kN

SHEAR SUMMARY	**Shear force**	**100 kN**
	Shear resistance	**365.51 kN**

Hence section is satisfactory, no shear reinforcement is required.

Transverse reinforcement (links)

Chosen diameter of links dial=8 mm
Maximum spacing smx=240 mm

WARNING:
The durability check needs to be repeated. Please set the diameter of longitudinal reinforcement to 12 mm.

Location: Ex3 - Massive lightly-loaded column reinf. with mild steel

Design of circular column section to EC2

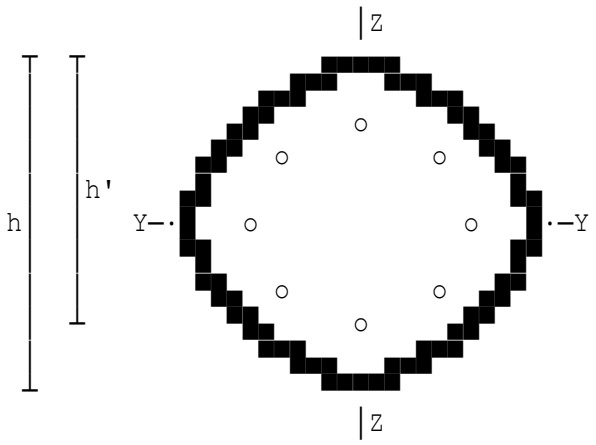

Reinforcement calculations are in accordance with EC2 Part 1-1 and the IStructE 'Manual for the design of concrete building structures to Eurocode 2'. Min.steel = six bars arranged symmetrically. Any greater number of bars (eight shown) increases resistance moment of section.

Larger initial end moment (+ve)	M2=10 kNm
Smaller initial end moment	M1=0 kNm
Design ultimate axial load	NEd=100 kN
Design ultimate shear force	VEd=1000 kN
Diameter of cross-section	h=2000 mm
Partial safety factor for steel	gams=1.15
Partial safety factor for conc.	gamc=1.5
Clear height of column	l=20 m
Char yield strength of reinf'ment	fyk=500 N/mm²
Diameter of longitudinal reinft.	dia=20 mm
Diameter of column links	dial=10 mm
Effective depth	h'=1900 mm

Slenderness - EC2 Clause 5.8.3.2

About Y-Y axis:
Column is considered to be braced about the stronger axis.
Effective height loy=bety*l*1000=15000 mm
About Z-Z axis:
Column is considered to be braced about the weaker axis.
Effective height loz=betz*l*1000=15000 mm

Check slenderness

For Y-Y stronger axis:
Slenderness lamy=loy/iy=30
Limiting slenderness lamly=20*A*B*C/n^0.5=514.27
Column is classified as being short in accordance with EC2 Part 1-1.

For Z-Z weaker axis:
Slenderness lamz=loz/iz=30
Limiting slenderness lamlz=20*A*B*C/n^0.5=514.27
Column is classified as being short in accordance with EC2 Part 1-1.

WARNING: Check on validity of the input values

Ratio of reinforcement term	**nu=1.0246**
Relative axial force	**n=0.0022469**
Value of n at maximum moment	**nbal=0.4**
Correction factor for axial load	**Kr=(nu-n)/(nu-nbal)**
	=1.6369

As this value is high, design the section as a beam.

Location: Ex4 - Example from CE Reynolds book (11th Edition p.356)

Design of circular column section to EC2

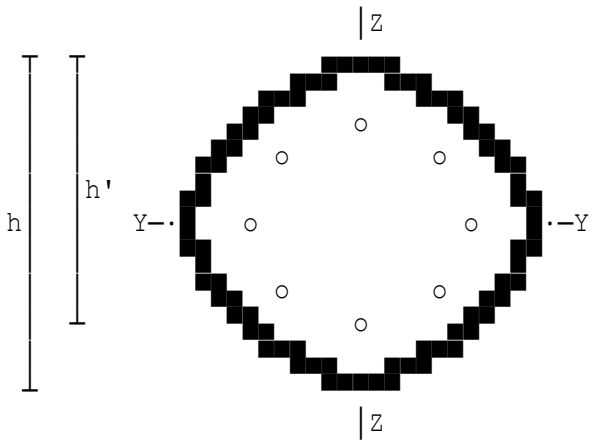

Reinforcement calculations are in accordance with EC2 Part 1-1 and the IStructE 'Manual for the design of concrete building structures to Eurocode 2'. Min.steel = six bars arranged symmetrically. Any greater number of bars (eight shown) increases resistance moment of section.

Larger initial end moment (+ve)	M2=40 kNm
Smaller initial end moment	M1=0 kNm
Design ultimate axial load	NEd=1700 kN
Design ultimate shear force	VEd=0 kN
Diameter of cross-section	h=350 mm
Partial safety factor for steel	gams=1.15
Partial safety factor for conc.	gamc=1.5
Clear height of column	l=5 m
Char yield strength of reinf'ment	fyk=500 N/mm²
Diameter of longitudinal reinft.	dia=20 mm
Diameter of column links	dial=8 mm
Nominal cover to all steel	cover=35 mm
Effective depth	h'=295 mm

Slenderness - EC2 Clause 5.8.3.2

About Y-Y axis:
Column is considered to be braced about the stronger axis.
Effective height loy=bety*l*1000=3750 mm
About Z-Z axis:
Column is considered to be braced about the weaker axis.
Effective height loz=betz*l*1000=3750 mm

Check slenderness

For Y-Y stronger axis:
Slenderness lamy=loy/iy=42.857
Limiting slenderness lamly=20*A*B*C/n^0.5=36.187
Column is classified as being slender in accordance with EC2 Part 1-1.

For Z-Z weaker axis:
Slenderness lamz=loz/iz=42.857
Limiting slenderness lamlz=20*A*B*C/n^0.5=36.187
Column is classified as being slender in accordance with EC2 Part 1-1.

Design moments - Clause 5.8.8.2

Design moment (y-y axis) MEd=Mo2*10^-6=55.938 kNm

Axial load and moment considerations

Effective/overall-depth ratio d'h=h'/h=0.84286
Axial load ratio Nrat=NEd*1000/(h^2*fck)=0.43367
Moment ratio Mrat=MEd*10^6/(h^3*fck)=0.040771

Longitudinal reinforcement

Chart data for circular columns is taken from 'The Concrete Centre' publication entitled 'Worked Examples to Eurocode 2: Volume 1'. The program initially evaluates the area of reinforcement taking K=1. The value of Nu and hence a new value of K is then determined leading to a reduced area of reinforcement. This process is then repeated until the minimum area of reinforcement is found. For further guidance refer to the IStrucE Manual to EC2, Section 5.5.4.3.
Calculated area of reinforcement Asc=val*fck/fyk*h^2=1891.7 mm²
Main steel diameter dia=12 mm
Number of bars to be provided NumBar=17

Transverse reinforcement (links)

Chosen diameter of links dial=8 mm
Maximum spacing smx=240 mm

WARNING:
The durability check needs to be repeated. Please set the diameter of longitudinal reinforcement to 12 mm.

Location: Ex5

Design of circular column section to EC2

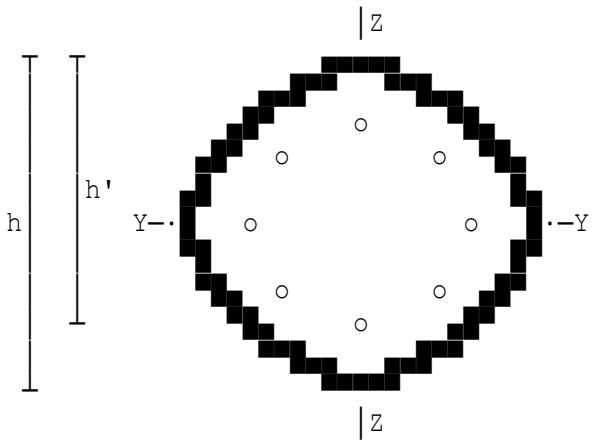

Reinforcement calculations are in accordance with EC2 Part 1-1 and the IStructE 'Manual for the design of concrete building structures to Eurocode 2'. Min.steel = six bars arranged symmetrically. Any greater number of bars (eight shown) increases resistance moment of section.

Larger initial end moment (+ve)	M2=40 kNm
Smaller initial end moment	M1=0 kNm
Design ultimate axial load	NEd=1720 kN
Design ultimate shear force	VEd=0 kN
Diameter of cross-section	h=350 mm
Partial safety factor for steel	gams=1.15
Partial safety factor for conc.	gamc=1.5
Clear height of column	l=4 m
Char yield strength of reinf'ment	fyk=500 N/mm²
Diameter of longitudinal reinft.	dia=20 mm
Diameter of column links	dial=8 mm
Nominal cover to all steel	cover=35 mm
Effective depth	h'=295 mm

Slenderness - EC2 Clause 5.8.3.2

About Y-Y axis:
Column is considered to be braced about the stronger axis.
Effective height loy=bety*l*1000=3000 mm
About Z-Z axis:
Column is considered to be braced about the weaker axis.
Effective height loz=betz*l*1000=4000 mm

Check slenderness

For Y-Y stronger axis:
Slenderness lamy=loy/iy=34.286
Limiting slenderness lamly=20*A*B*C/n^0.5=35.976
Column is classified as being short in accordance with EC2 Part 1-1.

For Z-Z weaker axis:
Slenderness lamz=loz/iz=45.714
Limiting slenderness lamlz=20*A*B*C/n^0.5=35.976
Column is classified as being slender in accordance with EC2 Part 1-1.

Design moments - Clause 5.8.8.2

Design moment (y-y axis) MEd=Mo2*10^-6=52.9 kNm

Axial load and moment considerations

Effective/overall-depth ratio d'h=h'/h=0.84286
Axial load ratio Nrat=NEd*1000/(h^2*fck)=0.43878
Moment ratio Mrat=MEd*10^6/(h^3*fck)=0.038557

Longitudinal reinforcement

Chart data for circular columns is taken from 'The Concrete Centre' publication entitled 'Worked Examples to Eurocode 2: Volume 1'. The program initially evaluates the area of reinforcement taking K=1. The value of Nu and hence a new value of K is then determined leading to a reduced area of reinforcement. This process is then repeated until the minimum area of reinforcement is found. For further guidance refer to the IStrucE Manual to EC2, Section 5.5.4.3.
Calculated area of reinforcement Asc=val*fck/fyk*h^2=1125.4 mm²
Main steel diameter dia=12 mm
Number of bars to be provided NumBar=10

Transverse reinforcement (links)

Chosen diameter of links dial=8 mm
Maximum spacing smx=240 mm

WARNING:
The durability check needs to be repeated. Please set the diameter of longitudinal reinforcement to 12 mm.

Location: Typical problem

Design to BS8110(1997), partial safety factor for steel gammaS=1.15

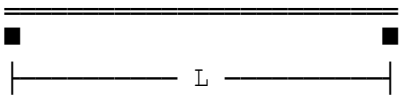

Effective span	L=5 m
Dead load factor	gamd=1.4
Imposed load factor	gami=1.6
Distance from left support	Lc(1)=1.4 m
Characteristic dead load	Gkc(1)=6.4 kN
Characteristic imposed load	Qkc(1)=0 kN
Dist.from left support to start	Lau(1)=0 m
Distance from left support to end	Lbu(1)=1.4 m
Characteristic dead load	Gku(1)=8 kN/m
Characteristic imposed load	Qku(1)=10 kN/m
Dist.from left support to start	Lau(2)=1.4 m
Distance from left support to end	Lbu(2)=5 m
Characteristic dead load	Gku(2)=12 kN/m
Characteristic imposed load	Qku(2)=15 kN/m
Overall depth of concrete section	h=400 mm
Breadth of concrete section	b=200 mm
Eff.depth of concrete section	d=357.5 mm
Depth to comp.reinforcement	d'=40 mm
Cover to all reinforcement	cover=20 mm
Characteristic concrete strength	fcu=40 N/mm²
Characteristic strength of links	fyv=500 N/mm²
Diameter of tension reinforcement	dia=25 mm
Diameter of links	dial=10 mm

TENSION	**Characteristic strength**	**500 N/mm²**
REINFORCEMENT	**Diameter of bars**	**25 mm**
SUMMARY	**Number of bars**	**2**
	Area required	**979.97 mm²**
	Area provided	**981.75 mm²**
See BS 8110	**(Anchorage & tension lap**	**860 mm**
: Part 1 :	**(1.4 * tension lap**	**1210 mm**
Cl.3.12.8.13	**(2.0 * tension lap**	**1730 mm**

Shear reinforcement

Design shear stress	v=V*1000/(bv*d)=1.4243 N/mm²
Longit.bars effective for shear	nbars=2

As characteristic concrete strength exceeds 25 N/mm²
therefore increase vc according to footnote in Table 3.8.

Modified design shear stress	vc=vc*(40/25)^(1/3)=0.84499 N/mm²

Design shear stress of 1.4243 N/mm² exceeds critical stress of 0.84499 N/mm², so links to resist balance of shear forces are necessary.

Number of shear legs	nlegs=2

Provide links to take shear force in accordance with Table 3.7.

Spacing of links along member sv=fyv/gammaS*Asv/(bv*(v-vc))
=589.42 mm
Limit spacing to sv=0.75*d=268.13 mm (to Clause 3.4.5.5)

SHEAR	**Characteristic strength**	**500 N/mm²**
REINFORCEMENT	**Diameter of bars**	**10 mm**
SUMMARY	**Number of legs**	**2**
	Spacing	**260 mm**
	Ensure that no longitudinal bar is more than 150 mm from vertical leg	

DEFLECTION	**Permissible span**	**5.3962 m**
SUMMARY	**Actual span**	**5 m**

As actual span does not exceed permissible, deflection is satisfactory.

Location: Heavily-loaded long span with triangular load, etc

Design to BS8110(1997), partial safety factor for steel gammaS=1.15

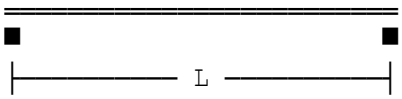

Effective span	L=12 m
Dead load factor	gamd=1.4
Imposed load factor	gami=1.6
Dist.from left support to start	Lau(1)=2 m
Distance from left support to end	Lbu(1)=10.5 m
Characteristic dead load	Gku(1)=8 kN/m
Characteristic imposed load	Qku(1)=12 kN/m
Overall depth of concrete section	h=600 mm
Breadth of concrete section	b=500 mm
Eff.depth of concrete section	d=357.5 mm
Depth to comp.reinforcement	d'=50 mm
Cover to all reinforcement	cover=20 mm
Characteristic concrete strength	fcu=60 N/mm²
Characteristic strength of links	fyv=500 N/mm²
Diameter of tension reinforcement	dia=25 mm
Diameter of links	dial=10 mm

TENSION	**Characteristic strength**	**500 N/mm²**
REINFORCEMENT	**Diameter of bars**	**25 mm**
SUMMARY	**Number of bars**	**8**
	Area required	**3899.9 mm²**
	Area provided	**3927 mm²**
See BS 8110	**(Anchorage & tension lap**	**710 mm**
: Part 1 :	**(1.4 * tension lap**	**1000 mm**
Cl.3.12.8.13	**(2.0 * tension lap**	**1430 mm**

Shear reinforcement

Design shear stress v=V*1000/(bv*d)=0.7529 N/mm²
Longit.bars effective for shear nbars=4
As characteristic concrete strength exceeds 25 N/mm²
therefore increase vc according to footnote in Table 3.8.
Modified design shear stress vc=vc*(40/25)^(1/3)=0.78442 N/mm²
Design shear stress of 0.7529 N/mm² does not exceed critical shear stress of 0.78442 N/mm², so only nominal links need be provided.

Number of shear legs nlegs=2
Provide minimum links to meet requirements of Table 3.7.
Spacing of links along member sv=fyv/gammaS*Asv/(0.4*bv)=341.48 mm
Limit spacing to sv=0.75*d=268.13 mm (to Clause 3.4.5.5)

SHEAR	**Characteristic strength**	**500 N/mm²**
REINFORCEMENT	**Diameter of bars**	**10 mm**
SUMMARY	**Number of legs**	**2**
	Spacing	**260 mm**
	Ensure that no longitudinal bar is more than 150 mm from vertical leg	

DEFLECTION	**Permissible span**	**4.1082 m**
SUMMARY	**Actual span**	**12 m**

WARNING:
As actual span > permissible, deflection criteria are violated.

Location: Lightly loaded beam with concentrated load only

Design to BS8110(1997), partial safety factor for steel gammaS=1.15

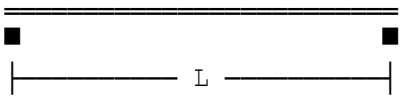

Effective span	L=7 m
Dead load factor	gamd=1.4
Imposed load factor	gami=1.6
Distance from left support	Lc(1)=1.4 m
Characteristic dead load	Gkc(1)=4 kN
Characteristic imposed load	Qkc(1)=8 kN
Overall depth of concrete section	h=400 mm
Breadth of concrete section	b=250 mm
Eff.depth of concrete section	d=357 mm
Depth to comp.reinforcement	d'=40 mm
Cover to all reinforcement	cover=20 mm
Characteristic concrete strength	fcu=25 N/mm²
Characteristic strength of links	fyv=500 N/mm²
Diameter of tension reinforcement	dia=20 mm
Diameter of links	dial=10 mm

TENSION	**Characteristic strength**	**500 N/mm²**
REINFORCEMENT	**Diameter of bars**	**20 mm**
SUMMARY	**Number of bars**	**1**
	Area required	**139.76 mm²**
	Area provided	**314.16 mm²**
See BS 8110	**(Anchorage & tension lap**	**870 mm**
: Part 1 :	**(1.4 * tension lap**	**1220 mm**
Cl.3.12.8.13	**(2.0 * tension lap**	**1750 mm**

Shear reinforcement

Design shear stress	v=V*1000/(bv*d)=0.16493 N/mm²
Longit.bars effective for shear	nbars=2

Design shear stress of 0.16493 N/mm² does not exceed critical shear stress of 0.57844 N/mm², so only nominal links need be provided.

Number of shear legs	nlegs=2

Provide minimum links to meet requirements of Table 3.7.

Spacing of links along member	sv=fyv/gammaS*Asv/(0.4*bv)=682.95 mm

Limit spacing to sv=0.75*d=267.75 mm (to Clause 3.4.5.5)

SHEAR	**Characteristic strength**	**500 N/mm²**
REINFORCEMENT	**Diameter of bars**	**10 mm**
SUMMARY	**Number of legs**	**2**
	Spacing	**260 mm**
	Ensure that no longitudinal bar is more than 150 mm from vertical leg	

DEFLECTION SUMMARY	**Permissible span**	**14.28 m**
	Actual span	**7 m**

As actual span does not exceed permissible, deflection is satisfactory.

Location: Slab example

Design to BS8110(1997), partial safety factor for steel gammaS=1.15

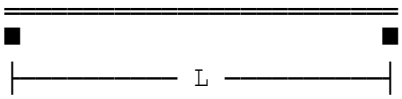

Effective span	L=4.5 m
Dead load factor	gamd=1.4
Imposed load factor	gami=1.6
Dist.from left support to start	Lau(1)=0 m
Distance from left support to end	Lbu(1)=4.5 m
Characteristic dead load	Gku(1)=6 kN/m
Characteristic imposed load	Qku(1)=5 kN/m
Overall depth of concrete section	h=225 mm
Breadth of concrete section	b=1000 mm
Eff.depth of concrete section	d=190 mm
Depth to comp.reinforcement	d'=35 mm
Cover to all reinforcement	cover=20 mm
Characteristic concrete strength	fcu=35 N/mm²
Characteristic strength of links	fyv=500 N/mm²
Diameter of tension reinforcement	dia=12 mm

TENSION	**Characteristic strength**	**500 N/mm²**
REINFORCEMENT	**Diameter of bars**	**12 mm**
	Bar cross-centres	**200 mm**
	Area required	**528.97 mm²/m**
	Area provided	**565.49 mm²/m**
See BS 8110	**(Anchorage & tension lap**	**450 mm**
: Part 1 :	**(1.4 * tension lap**	**640 mm**
Cl.3.12.8.13	**(2.0 * tension lap**	**910 mm**

Diameter of distribution bars diamn=8 mm

DISTRIBUTION	**Characteristic strength**	**500 N/mm²**
REINFORCEMENT	**Diameter of bars**	**8 mm**
SUMMARY	**Spacing of bars**	**150 mm**
	Area of steel required	**292.5 mm²/m**
	Area of steel provided	**335 mm²/m**

Shear reinforcement

Design shear stress v=V*1000/(bv*d)=0.19421 N/mm²
Longit.bars effective for shear nbars=3
As characteristic concrete strength exceeds 25 N/mm²
therefore increase vc according to footnote in Table 3.8.
Modified design shear stress vc=vc*(fcu/25)^(1/3)=0.47958 N/mm²

As design shear stress of 0.19421 N/mm² does not exceed critical shear stress of 0.47958 N/mm², no shear reinforcement is required.

DEFLECTION SUMMARY	**Permissible span**	**4.6418 m**
	Actual span	**4.5 m**

As actual span does not exceed permissible, deflection is satisfactory.

Location: Typical problem

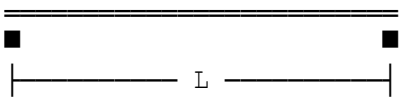

Effective span	L=5 m
Dead load factor	gamd=1.25
Imposed load factor	gami=1.5
Distance from left support	Lc(1)=1.4 m
Characteristic dead load	Gkc(1)=6.4 kN
Characteristic imposed load	Qkc(1)=0 kN
Dist.from left support to start	Lau(1)=0 m
Distance from left support to end	Lbu(1)=1.4 m
Characteristic dead load	Gku(1)=8 kN/m
Characteristic imposed load	Qku(1)=10 kN/m
Dist.from left support to start	Lau(2)=1.4 m
Distance from left support to end	Lbu(2)=5 m
Characteristic dead load	Gku(2)=12 kN/m
Characteristic imposed load	Qku(2)=15 kN/m
Overall depth of concrete section	h=400 mm
Breadth of concrete section	b=200 mm

Materials

Char yield strength of reinf'ment	fyk=500 N/mm²
Max.aggregate size (for bar spc.)	hagg=20 mm
Diameter of tension bars	dia=25 mm
Diameter of link legs	dial=8 mm

DESIGN	**Overall depth**	**400 mm**
SUMMARY	**Effective depth**	**344 mm**
	Width of section	**200 mm**
FLEXURE	**Parameter K**	**0.1643**
	Parameter K'	**0.1684**
	Lever arm ratio z/d	**0.8241**
TENSION REINFORCEMENT	**Steel area required**	**946.5 mm²**
	Steel area provided	**981.7 mm²**
	Diameter of bars	**25 mm**
	Number of bars	**2**
	Steel percentage req.	**1.376 %**
	Minimum area of steel	**103.6 mm²**
	Maximum area of steel	**3200 mm²**

Shear check

Design shear stress	vEd=VEd*10^3/(0.9*bw*d)=1.511 N/mm²
Concrete strut capacity	vRdm=0.124*fck*(1-fck/250)=3.274 N/mm²
Angle of inclination of strut	theta'=22°
Number of shear legs	nsl=2
Chosen spacing	s=250 mm

SHEAR SUMMARY	**Design shear force**	**93.54 kN**
	Design shear stress	**1.511 N/mm²**
	Concrete strut capacity	**3.274 N/mm²**
	Area/spacing ratio	**0.278**
	Diameter of links	**8 mm**
	Area of links	**100 mm²**
	Maximum spacing (based on 0.75d)	**258 mm**
	Actual spacing	**250 mm**
DESIGN SUMMARY	**Actual l/d ratio**	**14.53**
	Basic l/d ratio	**14.27**
	Span factor	**1**
DEFLECTION	**Flange beam factor F1**	**1**
	Long spans factor F2	**1**
	Steel stress factor F3	**1.037**
	Allowable l/d ratio	**14.8**

Location: Heavily-loaded long span with triangular load, etc

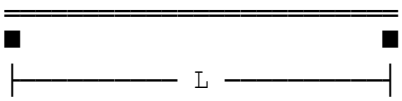

Effective span	L=12 m
Dead load factor	gamd=1.25
Imposed load factor	gami=1.5
Dist.from left support to start	Lau(1)=2 m
Distance from left support to end	Lbu(1)=10.5 m
Characteristic dead load	Gku(1)=8 kN/m
Characteristic imposed load	Qku(1)=12 kN/m
Overall depth of concrete section	h=600 mm
Breadth of concrete section	b=500 mm

Materials

Char yield strength of reinf'ment	fyk=500 N/mm²
Max.aggregate size (for bar spc.)	hagg=20 mm
Diameter of tension bars	dia=25 mm
Diameter of link legs	dial=10 mm
Diameter of compression bars	diac=25 mm
Depth to compression steel	d2=55 mm

DESIGN	**Overall depth**	**600 mm**
SUMMARY	**Effective depth**	**357.5 mm**
	Width of section	**500 mm**
FLEXURE	**Parameter K**	**0.2401**
	Parameter K'	**0.1684**
	Lever arm ratio z/d	**0.8185**
TENSION REINFORCEMENT	**Steel area provided**	**3927 mm²**
	Diameter of bars	**25 mm**
	Number of bars	**8**
	Steel area required	**3582 mm²**
	Steel percentage req.	**2.004 %**
	Minimum area of steel	**269.2 mm²**
	Maximum area of steel	**12000 mm²**
COMPRESSION REINFORCEMENT	**Steel area provided**	**1473 mm²**
	Diameter of bars	**25 mm**
	Number of bars	**3**
	Steel area required	**1045 mm²**
	Minimum area required	**600 mm²**

Shear check

Design shear stress	vEd=VEd*10^3/(0.9*bw*d)=0.7705 N/mm²
Concrete strut capacity	vRdm=0.124*fck*(1-fck/250)=3.274 N/mm²
Angle of inclination of strut	theta'=22°
Number of shear legs	nsl=2
Chosen spacing	s=250 mm

SHEAR SUMMARY	**Design shear force**	**124 kN**
	Design shear stress	**0.7705 N/mm²**
	Concrete strut capacity	**3.274 N/mm²**
	Area/spacing ratio	**0.4382**
	Diameter of links	**10 mm**
	Area of links	**157 mm²**
	Maximum spacing (based on 0.75d)	**268.1 mm**
	Actual spacing	**250 mm**

WARNING:
Actual ratio exceeds allowable ratio (33.57 > 9.362)
Please revise input values.

Location: Lightly loaded beam with concentrated load only

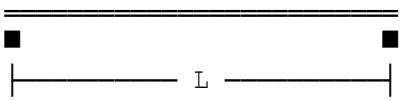

Effective span	L=7 m
Dead load factor	gamd=1.25
Imposed load factor	gami=1.5
Distance from left support	Lc(1)=1.4 m
Characteristic dead load	Gkc(1)=4 kN
Characteristic imposed load	Qkc(1)=8 kN
Overall depth of concrete section	h=400 mm
Breadth of concrete section	b=250 mm

Materials

Char yield strength of reinf'ment	fyk=500 N/mm²
Max.aggregate size (for bar spc.)	hagg=20 mm
Diameter of tension bars	dia=20 mm
Diameter of link legs	dial=8 mm

DESIGN SUMMARY	**Overall depth**	**400 mm**
	Effective depth	**342 mm**
	Width of section	**250 mm**
FLEXURE	**Parameter K**	**0.0217**
	Parameter K'	**0.1684**
	Lever arm ratio z/d	**0.95**
TENSION REINFORCEMENT	**Steel area required**	**134.8 mm²**
	Steel area provided	**628.3 mm²**
	Diameter of bars	**20 mm**
	Number of bars	**2**
	Steel percentage req.	**0.1576 %**
	Minimum area of steel	**128.8 mm²**
	Maximum area of steel	**4000 mm²**

Shear check

Design shear stress	vEd=VEd*10^3/(0.9*bw*d)=0.1767 N/mm²
Concrete strut capacity	vRdm=0.124*fck*(1-fck/250)=3.274 N/mm²
Angle of inclination of strut	theta'=22°
Number of shear legs	nsl=2
Chosen spacing	s=250 mm

SHEAR SUMMARY	**Design shear force**	**13.6 kN**
	Design shear stress	**0.1767 N/mm²**
	Concrete strut capacity	**3.274 N/mm²**
	Area/spacing ratio	**0.2191**
	Diameter of links	**8 mm**
	Area of links	**100 mm²**
	Maximum spacing (based on 0.75d)	**256.5 mm**
	Actual spacing	**250 mm**

DESIGN	**Actual l/d ratio**	**20.47**
SUMMARY	**Basic l/d ratio**	**107.8**
	Span factor	**1**
DEFLECTION	**Flange beam factor F1**	**1**
	Long spans factor F2	**1**
	Steel stress factor F3	**4.662**
	Allowable l/d ratio	**502.4**

Location: Slab example

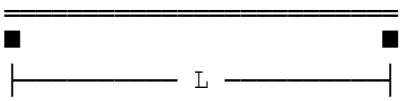

Effective span	L=4.5 m
Dead load factor	gamd=1.25
Imposed load factor	gami=1.5
Dist.from left support to start	Lau(1)=0 m
Distance from left support to end	Lbu(1)=4.5 m
Characteristic dead load	Gku(1)=6 kN/m
Characteristic imposed load	Qku(1)=5 kN/m
Overall depth of concrete section	h=225 mm

Materials

Char yield strength of reinf'ment	fyk=500 N/mm²
Max.aggregate size (for bar spc.)	hagg=20 mm
Diameter of tension bars	dia=12 mm

DESIGN SUMMARY FLEXURE	**Overall depth**	**225 mm**
	Effective depth	**190 mm**
	Parameter K	**0.0351**
	Parameter K'	**0.1684**
	Lever arm ratio z/d	**0.95**
	Steel area (tension)	**483.8 mm²/m**
	Steel percentage req.	**0.2546 %**
	Minimum area of steel	**286.2 mm²/m**
	Maximum area of steel	**9000 mm²/m**
	Distribution steel	**286.2 mm²/m**

Chosen spacing of tension bars	pch=200 mm
Diameter of distribution bars	diad=10 mm
Chosen spacing of distn. bars	pchd=250 mm

TENSION REINFORCEMENT	**Diameter of bars**	**12 mm**
	Spacing of bars	**200 mm**
	Area of steel required	**483.8 mm²/m**
	Area of steel provided	**565 mm²/m**
DISTRIBUTION REINFORCEMENT	**Diameter of bars**	**10 mm**
	Spacing of bars	**250 mm**
	Area of steel required	**286.2 mm²/m**
	Area of steel provided	**314 mm²/m**

Shear check

Term for shear resistance	vRdc=(rho1*fck)^(1/3)=1.646
Shear resistance	VRdc=CRdc*ks*vRdc*bw*d/1000=75.06 kN
Minimum stress	vmin=0.035*ks^1.5*fck^0.5=0.5422 N/mm²
Minimum shear resistance	VRdm=vmin*bw*d/1000=103 kN
Modified shear resistance	VRdc=VRdm=103 kN

SHEAR SUMMARY	**Design shear force**	**33.75 kN**
	Design shear resistance	**103 kN**
DESIGN	**Actual l/d ratio**	**23.68**
SUMMARY	**Basic l/d ratio**	**50.32**
	Span factor	**1**
DEFLECTION	**Flange beam factor F1**	**1**
	Long spans factor F2	**1**
	Steel stress factor F3	**1.168**
	Allowable l/d ratio	**58.76**

NOTE: If the percentage reinforcement is less than 0.4% care should be taken with the EC2 values as the deflection equations used give unrealistically high values.
Table 7.4N gives span/effective depth ratios for C30/37 concrete and reinforcement percentage, ρ=0.5% as:

Simply supported spans	**20**
End spans	**26**
Interior spans	**30**

Location: Beam B1-B2

Design to BS8110(1997) with partial safety factor for steel gammaS=1.15

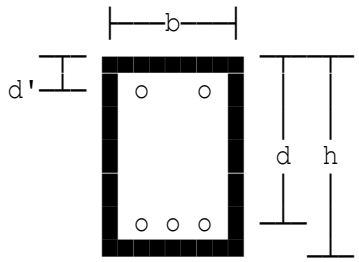

Rectangular beam/slab section

Calculations for reinforcement are in accordance with BS8110.

Normal-weight concrete only.

Moment before redistribution	Mbefor=181.42 kNm
Shear force due to ultimate loads	V=50 kN
Axial load due to ultimate loads	N=0 kN
Length of beam/slab	len=5 m
Overall depth of concrete section	h=400 mm
Breadth of concrete section	b=200 mm
Cover to all reinforcement	cover=20 mm
Eff.depth of concrete section	d=357.5 mm
Depth to compression steel	d'=40 mm
BM at section after redistrib.	M=127 kNm
Characteristic concrete strength	fcu=40 N/mm²
Characteristic strength of links	fyv=500 N/mm²
Diameter of tension bars	dia=25 mm
Diameter of links	dial=10 mm
Diameter of compression bars	diac=12 mm

COMPRESSION	**Characteristic strength**	**500 N/mm²**
REINFORCEMENT	**Diameter of bars**	**12 mm**
SUMMARY	**Number of bars**	**2**
	Area required	**160 mm²**
	Area provided	**226.19 mm²**
See BS 8110	**(Anchorage length**	**330 mm**
Cl.3.12.8.15	**(Lap length**	**410 mm**

TENSION	**Characteristic strength**	**500 N/mm²**
REINFORCEMENT	**Diameter of bars**	**25 mm**
SUMMARY	**Number of bars**	**2**
	Area required	**953.04 mm²**
	Area provided	**981.75 mm²**
See BS 8110	**Anchorage & tension lap**	**860 mm**
Part 1 Clause	**1.4 * tension lap**	**1210 mm**
3.12.8.13	**2.0 * tension lap**	**1730 mm**

Shear reinforcement

No.of long.bars eff.for shear nbars=2
Design shear stress of 0.6993 N/mm² does not exceed critical shear stress of 0.84499 N/mm², so only nominal links need be provided.

SHEAR	**Characteristic strength**	**500 N/mm²**
REINFORCEMENT	**Diameter of bars**	**10 mm**
SUMMARY	**Number of legs**	**2**
	Spacing	**140 mm**
	Ensure that no longitudinal bar is more than 150 mm from vertical leg	

Location: Small beam with high moment and shear

Design to BS8110(1997) with partial safety factor for steel gammaS=1.15

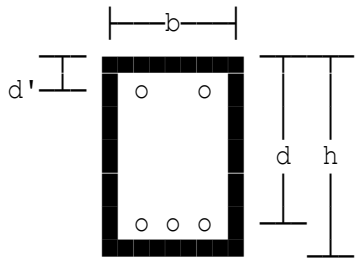

Rectangular beam/slab section

Calculations for reinforcement are in accordance with BS8110.

Normal-weight concrete only.

Moment before redistribution	Mbefor=250 kNm
Shear force due to ultimate loads	V=200 kN
Axial load due to ultimate loads	N=50 kN
Length of beam/slab	len=6 m
Overall depth of concrete section	h=300 mm
Breadth of concrete section	b=200 mm
Cover to all reinforcement	cover=20 mm
Eff.depth of concrete section	d=252 mm
Depth to compression steel	d'=41 mm
BM at section after redistrib.	M=200 kNm
Characteristic concrete strength	fcu=40 N/mm²
Characteristic strength of links	fyv=500 N/mm²
Diameter of tension bars	dia=40 mm
Diameter of links	dial=8 mm
Diameter of compression bars	diac=25 mm

COMPRESSION	**Characteristic strength**	**500 N/mm²**
REINFORCEMENT	**Diameter of bars**	**25 mm**
SUMMARY	**Number of bars**	**3**
	Area required	**1449.1 mm²**
	Area provided	**1472.6 mm²**
See BS 8110 (	**Anchorage length**	**690 mm**
Cl.3.12.8.15 (	**Lap length**	**860 mm**

TENSION	**Characteristic strength**	**500 N/mm²**
REINFORCEMENT	**Diameter of bars**	**40 mm**
SUMMARY	**Number of bars**	**2**
	Area required	**2194.2 mm²**
	Area provided	**2513.3 mm²**
See BS 8110	**Anchorage & tension lap**	**1380 mm**
Part 1 Clause	**1.4 * tension lap**	**1940 mm**
3.12.8.13	**2.0 * tension lap**	**2770 mm**

Shear reinforcement

No.of long.bars eff.for shear nbars=2

Design shear stress of 3.9683 N/mm² exceeds critical stress of 1.1966 N/mm², so links to resist balance of shear forces are necessary.

SHEAR	**Characteristic strength**	**500 N/mm²**
REINFORCEMENT	**Diameter of bars**	**8 mm**
SUMMARY	**Number of legs**	**2**
	Spacing	**70 mm**
	Ensure that no longitudinal bar is more than 150 mm from vertical leg	
DEFLECTION	**Permissible span**	**5.9363 m**
SUMMARY	**Actual span**	**6 m**

WARNING:
As actual span > permissible, deflection criteria are violated.

Location: Deep, narrow beam with minimum moment and shear

Design to BS8110(1997) with partial safety factor for steel gammaS=1.15

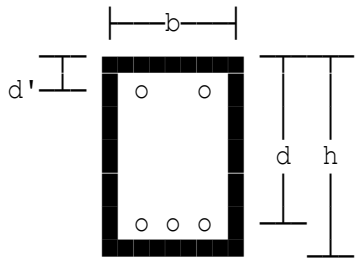

Rectangular beam/slab section

Calculations for reinforcement are in accordance with BS8110.

Normal-weight concrete only.

Moment before redistribution	Mbefor=10 kNm
Shear force due to ultimate loads	V=5 kN
Axial load due to ultimate loads	N=0 kN
Length of beam/slab	len=6.75 m
Overall depth of concrete section	h=1500 mm
Breadth of concrete section	b=200 mm
Cover to all reinforcement	cover=35 mm
Eff.depth of concrete section	d=1440 mm
Depth to compression steel	d'=60 mm
BM at section after redistrib.	M=10 kNm
Characteristic concrete strength	fcu=40 N/mm²
Characteristic strength of links	fyv=250 N/mm²
Diameter of tension bars	dia=25 mm
Diameter of links	dial=10 mm

TENSION		**Characteristic strength**	**500 N/mm²**
REINFORCEMENT		**Diameter of bars**	**25 mm**
SUMMARY		**Number of bars**	**2**
		Area required	**390 mm²**
		Area provided	**981.75 mm²**
	See BS 8110	**Anchorage & tension lap**	**860 mm**
	Part 1 Clause	**1.4 * tension lap**	**1210 mm**
	3.12.8.13	**2.0 * tension lap**	**1730 mm**

Shear reinforcement

No.of long.bars eff.for shear nbars=2
Design shear stress of 0.017361 N/mm² does not exceed critical shear stress of 0.51637 N/mm², so only nominal links need be provided.

SHEAR	**Characteristic strength**	**250 N/mm²**
REINFORCEMENT	**Diameter of bars**	**10 mm**
SUMMARY	**Number of legs**	**2**
	Spacing	**420 mm**
	Ensure that no longitudinal bar is more than 150 mm from vertical leg	

Diameter provided	dias=16 mm	
SIDE BAR	**Characteristic strength**	**500 N/mm²**
REINFORCEMENT	**Diameter of bars**	**16 mm**
SUMMARY	**Number of bars/side**	**5**
	Spacing of bars	**200 mm**
DEFLECTION	**Permissible span**	**57.6 m**
SUMMARY	**Actual span**	**6.75 m**

As actual span does not exceed permissible, deflection is OK.

Location: Deep, heavily loaded slab

Design to BS8110(1997) with partial safety factor for steel gammaS=1.15

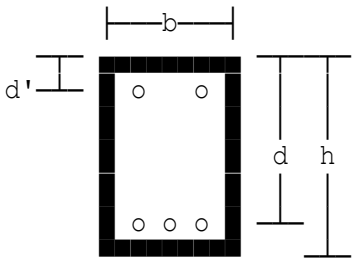

Rectangular beam/slab section

Calculations for reinforcement are in accordance with BS8110.

Normal-weight concrete only.

Moment before redistribution	Mbefor=1000 kNm
Shear force due to ultimate loads	V=340 kN
Axial load due to ultimate loads	N=0 kN
Length of beam/slab	len=4.75 m
Overall depth of concrete section	h=400 mm
Breadth of concrete section	b=1000 mm
Cover to all reinforcement	cover=30 mm
Eff.depth of concrete section	d=340 mm
Depth to compression steel	d'=60 mm
BM at section after redistrib.	M=900 kNm
Characteristic concrete strength	fcu=60 N/mm²
Characteristic strength of links	fyv=500 N/mm²
Diameter of tension bars	dia=32 mm
Diameter of links	dial=10 mm

TENSION REINFORCEMENT SUMMARY	**Characteristic strength**	**500 N/mm²**
	Diameter of bars	**32 mm**
	Number of bars	**10**
	Area required	**7376.9 mm²**
	Area provided	**8042.5 mm²**
See BS 8110 Part 1 Clause 3.12.8.13	**Anchorage & tension lap**	**900 mm**
	1.4 * tension lap	**1270 mm**
	2.0 * tension lap	**1810 mm**

Diameter of distribution bars diamn=12 mm

DISTRIBUTION REINFORCEMENT SUMMARY	**Characteristic strength**	**500 N/mm²**
	Diameter of bars	**12 mm**
	Spacing of bars	**200 mm**
	Area of steel required	**520 mm²/m**
	Area of steel provided	**565 mm²/m**

Shear reinforcement

No.of long.bars eff.for shear nbars=10

As design shear stress of 1 N/mm² does not exceed critical shear stress of 1.0257 N/mm², no shear reinforcement is required.

DEFLECTION	**Permissible span**	**6.0263 m**
SUMMARY	**Actual span**	**4.75 m**

As actual span does not exceed permissible, deflection is OK.

Location: Default example

Rectangular beam/slab design

Calculations are based on EN1992-1-1:2004 Eurocode 2:Design of concrete structures and assume the use of a simplified rectangular concrete stress-block, and that the depth to the neutral axis is restricted to 0.45*d.

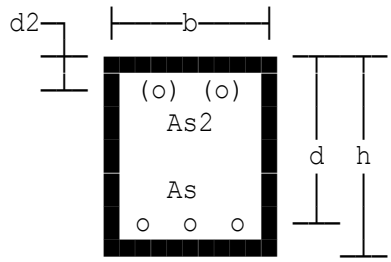

Moment before redistribution Mbef=221 kNm
Shear force due to ultimate loads VEd=102 kN
Axial load due to ultimate loads NEd=0 kN
Length of beam/slab L=5 m
Overall depth of concrete section h=500 mm
Breadth of concrete section b=250 mm
The member containing the section being considered is supported at both ends and is continuous at one or both ends.
Section considered has a hogging moment (support condition).
Char yield strength of reinft fyk=500 N/mm²
Max.aggregate size (for bar spc.) hagg=20 mm
Diameter of tension bars dia=25 mm
Diameter of link legs dial=10 mm
BM after redistribution M=221 kNm
Diameter of compression bars diac=20 mm
Depth to compression steel d2=55 mm

DESIGN	**Overall depth**	**500 mm**
SUMMARY	**Effective depth**	**415 mm**
	Width of section	**250 mm**
FLEXURE	**Parameter K**	**0.1711**
	Parameter K'	**0.1684**
	Lever arm ratio z/d	**0.8185**
TENSION REINFORCEMENT	**Steel area provided**	**1963 mm²**
	Diameter of bars	**25 mm**
	Number of bars	**4**
	Steel area required	**1495 mm²**
	Steel percentage req.	**1.441 %**
	Minimum area of steel	**156.3 mm²**
	Maximum area of steel	**5000 mm²**
COMPRESSION REINFORCEMENT	**Steel area provided**	**628.3 mm²**
	Diameter of bars	**20 mm**
	Number of bars	**2**
	Steel area required	**22.23 mm²**
	Minimum area required	**250 mm²**

Shear reinforcement

Design shear stress	vEd=VEd*10^3/(0.9*bw*d)=1.092 N/mm²
Concrete strut capacity	vRdm=0.124*fck*(1-fck/250)=3.274 N/mm²
Angle of inclination of strut	theta'=22°
Number of shear legs	nsl=2
Chosen spacing	s=300 mm

SHEAR SUMMARY	**Design shear force**	**102 kN**
	Design shear stress	**1.092 N/mm²**
	Concrete strut capacity	**3.274 N/mm²**
	Area/spacing ratio	**0.2512**
	Diameter of links	**10 mm**
	Area of links	**157 mm²**
	Maximum spacing (based on 0.75d)	**311.3 mm**
	Actual spacing	**300 mm**

Location: Slab arrangement

Rectangular beam/slab design

Calculations are based on EN1992-1-1:2004 Eurocode 2:Design of concrete structures and assume the use of a simplified rectangular concrete stress-block, and that the depth to the neutral axis is restricted to 0.45*d.

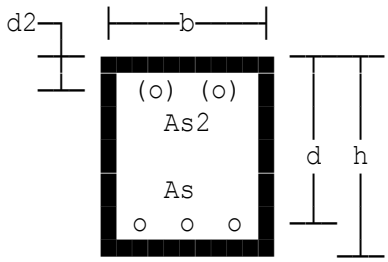

Moment before redistribution Mbef=200 kNm
Shear force due to ultimate loads VEd=100 kN
Axial load due to ultimate loads NEd=0 kN
Length of beam/slab L=6 m
Overall depth of concrete section h=400 mm
Breadth of concrete section b=1000 mm
The member containing the section being considered is supported at both ends and is continuous at one or both ends.
Section considered has a hogging moment (support condition).
Char yield strength of reinft fyk=500 N/mm²
Max.aggregate size (for bar spc.) hagg=20 mm
Diameter of tension bars dia=25 mm
BM after redistribution M=221 kNm

DESIGN	**Overall depth**	**400 mm**
SUMMARY	**Effective depth**	**352 mm**
FLEXURE	**Parameter K**	**0.0595**
	Parameter K'	**0.1684**
	Lever arm ratio z/d	**0.9445**
	Steel area (tension)	**1529 mm²/m**
	Steel percentage req.	**0.4344 %**
	Minimum area of steel	**530.2 mm²/m**
	Maximum area of steel	**16000 mm²/m**
	Distribution steel	**530.2 mm²/m**

Chosen spacing of tension bars pch=320 mm
Diameter of distribution bars diad=12 mm
Chosen spacing of distn. bars pchd=150 mm

TENSION REINFORCEMENT	**Diameter of bars**	**25 mm**
	Spacing of bars	**320 mm**
	Area of steel required	**1529 mm²/m**
	Area of steel provided	**1533 mm²/m**
DISTRIBUTION REINFORCEMENT	**Diameter of bars**	**12 mm**
	Spacing of bars	**150 mm**
	Area of steel required	**530.2 mm²/m**
	Area of steel provided	**753 mm²/m**

Shear reinforcement

Term for shear resistance	vRdc=(rho1*fck)^(1/3)=2.355
Shear resistance	VRdc=CRdc*ks*vRdc*bw*d/1000=174.5 kN
Minimum stress	vmin=0.035*ks^1.5*fck^0.5=0.4452 N/mm²
Minimum shear resistance	VRdm=vmin*bw*d/1000=156.7 kN

SHEAR SUMMARY	**Design shear force**	**100 kN**
	Design shear resistance	**174.5 kN**

REINFORCED CONCRETE BEAM/SLAB CHECKING AID BS 8110
Parameters: fcu=37 fck=30 fy=500 fyv=500 b=150 d=225 d'=30
Shear (kN) carried by concrete and link legs at various spacings
assuming minimum percentage of tension steel provided.

No/dia	2/8	4/8	2/10	4/10	4/12	6/12	4/16	6/16	6/20	8/20	10/20
100 mm	112										
150 mm	79	145	116								

In the chart below: T denotes Tension & C denotes Compression steel.
Read along from moment to intercept with T or C then vertically down.

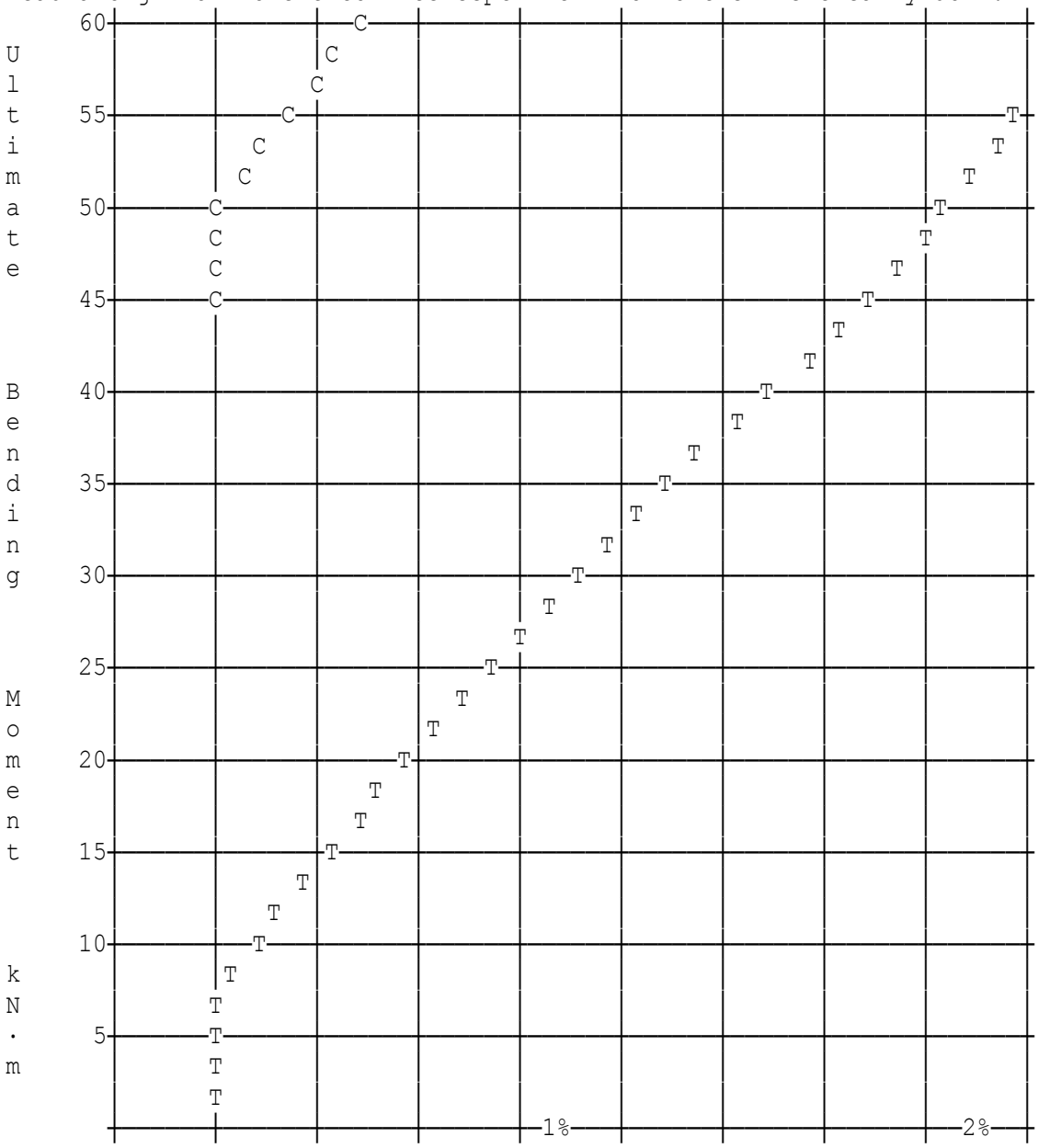

Area(mm²)	80	160	240	320	400	480	560	640	720
Number of bars reqd /	2 /	2 /	23 //	3 /	2 /		3 /	2 /	
Diameter of bar(mm)	8	10	20	12	16		16	20	

REINFORCED CONCRETE BEAM/SLAB CHECKING AID EUROCODE 2
Parameters: fck=30 fcu=37 fy=500 b=150 d=225 d'=30
Shear (kN) carried by concrete and link legs at various spacings
assuming minimum percentage of tension steel provided. cotθ=1

No/dia	2/8	4/8	2/10	4/10	4/12	6/12	4/16	6/16	6/20	8/20	10/20
100 mm	88		138								
150 mm	59	118	92								

In the chart below: T denotes Tension & C denotes Compression steel.
Read along from moment to intercept with T or C then vertically down.

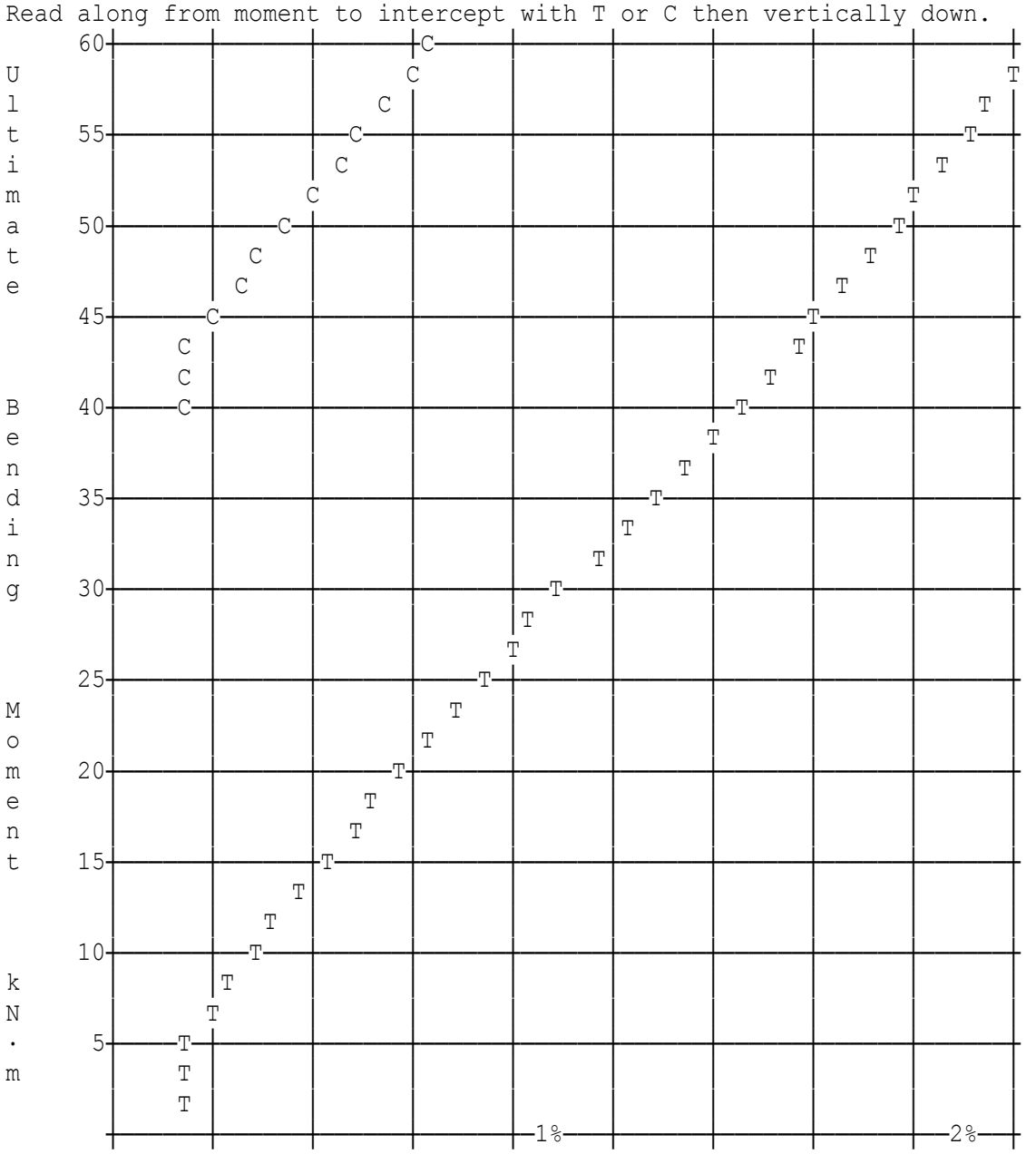

Location: Columns C2-C6, D2-D6, E4 & E5

Design to BS8110(1997), partial safety factor for steel gammaS=1.15

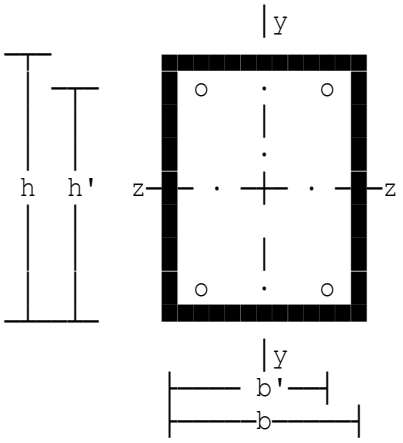

Biaxially bent stocky column

Calculations for reinforcement are in accordance with BS 8110 Clause 3.8.4.5 and ISE 'Manual for the design of reinforced concrete building structures'. For effective height of column see Clause 3.8.1.6 of BS8110.

Design ult.moment about z-axis	Mz=160 kNm
Shear force in y-direction	Fy=100 kN
Design ultimate axial load	N=2460 kN
Effective height of column	l=2.5 m
Depth of column cross-section	h=450 mm
Width of column cross-section	b=250 mm
Design ult.moment about y-axis	My=0 kNm
Cover to all reinforcement	cover=20 mm
Effective depth in y-direction	h'=394 mm
Effective depth in z-direction	b'=194 mm
Characteristic strength of conc.	fcu=50 N/mm²
Bar diameter for main steel	dia=32 mm

SUMMARY OF REINFORCEMENT REQUIRED

VERTICAL REINFORCEMENT SUMMARY	**Characteristic strength**	**500 N/mm²**
	Number of bars	**4**
	Diameter of bars	**32 mm**
LINK REINFORCEMENT SUMMARY	**Diameter of links**	**8 mm**
	Spacing	**250 mm**

Links round every corner bar and each alternate bar. Included angle must not exceed 135 deg. No bar must be more than 150 mm from a bar restrained by a link. See Clause 3.12.7.2.

Due to the column being lightly loaded sufficient longitudinal steel must be provided to control cracking.

Location: Small square column. Max.high-yield steel. High mom & load

Design to BS8110(1997), partial safety factor for steel gammaS=1.15

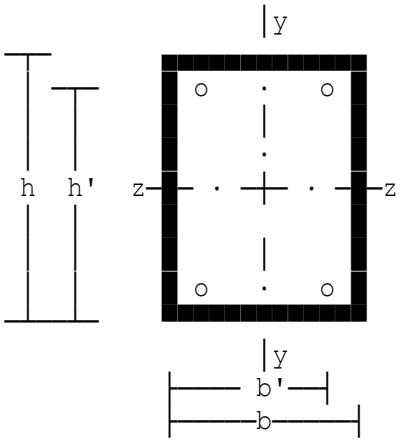

Biaxially bent stocky column

Calculations for reinforcement are in accordance with BS 8110 Clause 3.8.4.5 and ISE 'Manual for the design of reinforced concrete building structures'. For effective height of column see Clause 3.8.1.6 of BS8110.

Design ult.moment about z-axis	Mz=38 kNm
Shear force in y-direction	Fy=10 kN
Design ultimate axial load	N=400 kN
Effective height of column	l=2.5 m
Depth of column cross-section	h=200 mm
Width of column cross-section	b=200 mm
Design ult.moment about y-axis	My=38 kNm
Shear force in z-direction	Fz=0 kN
Cover to all reinforcement	cover=20 mm
Effective depth in y-direction	h'=150 mm
Effective depth in z-direction	b'=150 mm
Characteristic strength of conc.	fcu=60 N/mm²
Bar diameter for main steel	dia=16 mm

SUMMARY OF REINFORCEMENT REQUIRED

VERTICAL	**Characteristic strength**	**500 N/mm²**
REINFORCEMENT	**Number of bars**	**12**
SUMMARY	**Diameter of bars**	**16 mm**
LINK	**Diameter of links**	**8 mm**
REINFORCEMENT	**Spacing**	**190 mm**
SUMMARY	**Links round every corner bar and each alternate bar. Included angle must not exceed 135 deg. No bar must be more than 150 mm from a bar restrained by a link. See Clause 3.12.7.2.**	

Due to the column being lightly loaded sufficient longitudinal steel must be provided to control cracking.

Location: Large column. Min.high-yield steel. Moment and low load.

Design to BS8110(1997), partial safety factor for steel gammaS=1.15

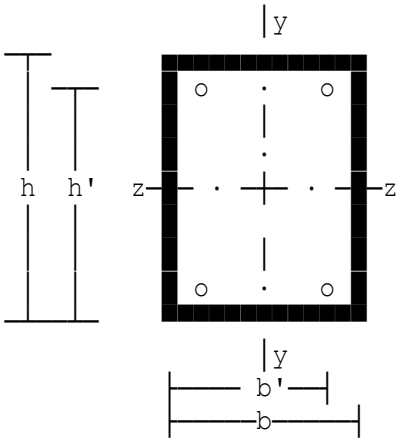

Biaxially bent stocky column

Calculations for reinforcement are in accordance with BS 8110 Clause 3.8.4.5 and ISE 'Manual for the design of reinforced concrete building structures'. For effective height of column see Clause 3.8.1.6 of BS8110.

Design ult.moment about z-axis	Mz=800 kNm
Shear force in y-direction	Fy=0 kN
Design ultimate axial load	N=50 kN
Effective height of column	l=5 m
Depth of column cross-section	h=2000 mm
Width of column cross-section	b=1500 mm
Design ult.moment about y-axis	My=1600 kNm
Shear force in z-direction	Fz=0 kN
Cover to all reinforcement	cover=40 mm
Effective depth in y-direction	h'=1920 mm
Effective depth in z-direction	b'=1420 mm
Characteristic strength of conc.	fcu=40 N/mm²
Bar diameter for main steel	dia=40 mm

SUMMARY OF REINFORCEMENT REQUIRED

VERTICAL REINFORCEMENT SUMMARY	**Characteristic strength**	**500 N/mm²**
	Number of bars	**10**
	Diameter of bars	**40 mm**
LINK REINFORCEMENT SUMMARY	**Diameter of links**	**10 mm**
	Spacing	**480 mm**

Links round every corner bar and each alternate bar. Included angle must not exceed 135 deg. No bar must be more than 150 mm from a bar restrained by a link. See Clause 3.12.7.2.

Due to the column being lightly loaded sufficient longitudinal steel must be provided to control cracking.

Location: Biaxial bending example

Isolated rectangular section subject bending and thrust

Design is based on EN 1992-1-1:2004, Eurocode 2: Design of concrete structures.
The main reinforcement design is based on balancing, by iterative means, of the two derived expressions for areas of reinforcing steel - one for axial load and the other for bending.
One layer of steel is assumed for the axis of bending.

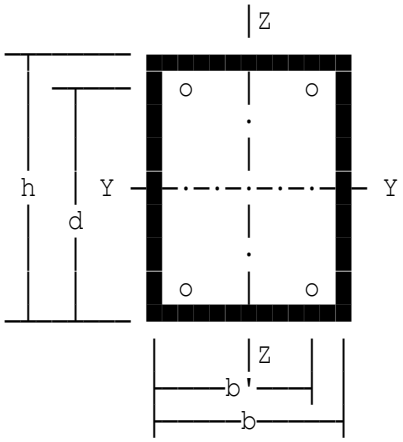

Design ult.moment about y-axis	Myy=146.1 kNm
Shear force in z-direction	VEd=0 kN
Design ultimate axial load	NEd=1650 kN
Effective height of column	l=3.2 m
Depth of column cross-section	h=350 mm
Width of column cross-section	b=350 mm
Char yield strength of reinf'ment	fyk=500 N/mm²
Max.aggregate size (for bar spc.)	hagg=25 mm
Diameter of compression bars	dia=32 mm
Diameter of link legs	dial=8 mm
Depth to comp. reinforcement	d2=88 mm
Smaller initial end moment	M1y=0 kNm
Larger initial end mt.(z-z axis)	M2z=114.5 kNm
Smaller initial end moment	M1z=0 kNm

About Y-Y axis:
Column under consideration is braced.
About Z-Z axis:
Column under consideration is braced.

Number of bars provided	nbars=8

Copyright 1986-2024 Fitzroy Systems Ltd.

DESIGN SUMMARY

Clear column height	**3.2 m**
Slenderness (y-y axis)	**26.921**
Column is short (y-y)	
Slenderness (z-z axis)	**26.921**
Column is short (z-z)	
Design axial load	**1650 kN**
Design bending moments:	
Y-Y axis	**159.3 kNm**
Z-Z axis	**127.7 kNm**
Designed area of steel	**3047.1 mm²**
Area of steel provided	**6434 mm²**
Minimum area of steel	**379.5 mm²**
Maximum area of steel	**4900 mm²**
Link diameter	**8 mm**
Maximum link spacing	**350 mm**
Resistance moment (y-y)	**256.51 kNm**
Resistance moment (z-z)	**256.51 kNm**
Biaxial bending factor	**0.99851**

Designed steel exceeds 4% of gross area. However the maximum area can be increased provided that the concrete can be placed and compacted sufficiently.

REINFORCED CONCRETE COLUMN CHECKING AID TO BS 8110
Parameters: fcu=37 fck=30 fy=500 b=300 h=300 d'=45
Every corner bar and each alternate bar in the outer layer should be supported by a link passing around the bar. No bar should be more than 150 mm from a restrained bar. Link sizes and spacing follow:

Main steel diameter	12	16	20	25	32	40
Minimum link diameter	6	6	6	8	8	10
Maximum link spacing	140	190	240	300	300	300

In the chart below: A,B,C etc. denote axial loads of values given.
When low value is not shown, the section should be designed as a beam.
Read along from moment to intercept with A,B,C etc. then down to selection of bars (which may be restricted by depth to reinforcement).

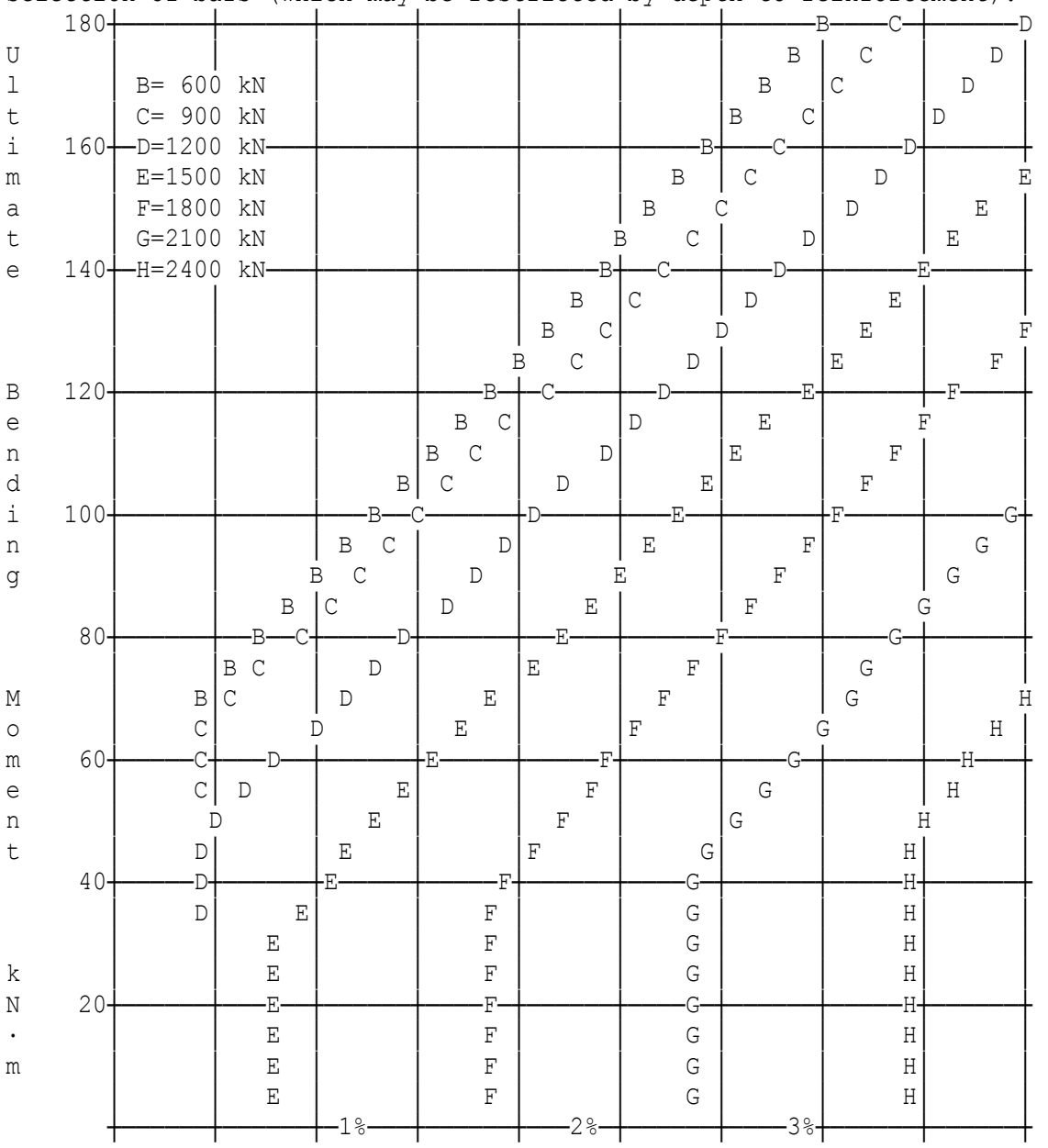

REINFORCED CONCRETE COLUMN CHECKING AID TO BS 8110
Parameters: fcu=37 fck=30 fy=500 b=300 h=350 d'=50
Every corner bar and each alternate bar in the outer layer should be supported by a link passing around the bar. No bar should be more than 150 mm from a restrained bar. Link sizes and spacing follow:

Main steel diameter	12	16	20	25	32	40
Minimum link diameter	6	6	6	8	8	10
Maximum link spacing	140	190	240	300	300	300

In the chart below: A,B,C etc. denote axial loads of values given.
When low value is not shown, the section should be designed as a beam.
Read along from moment to intercept with A,B,C etc. then down to selection of bars (which may be restricted by depth to reinforcement).

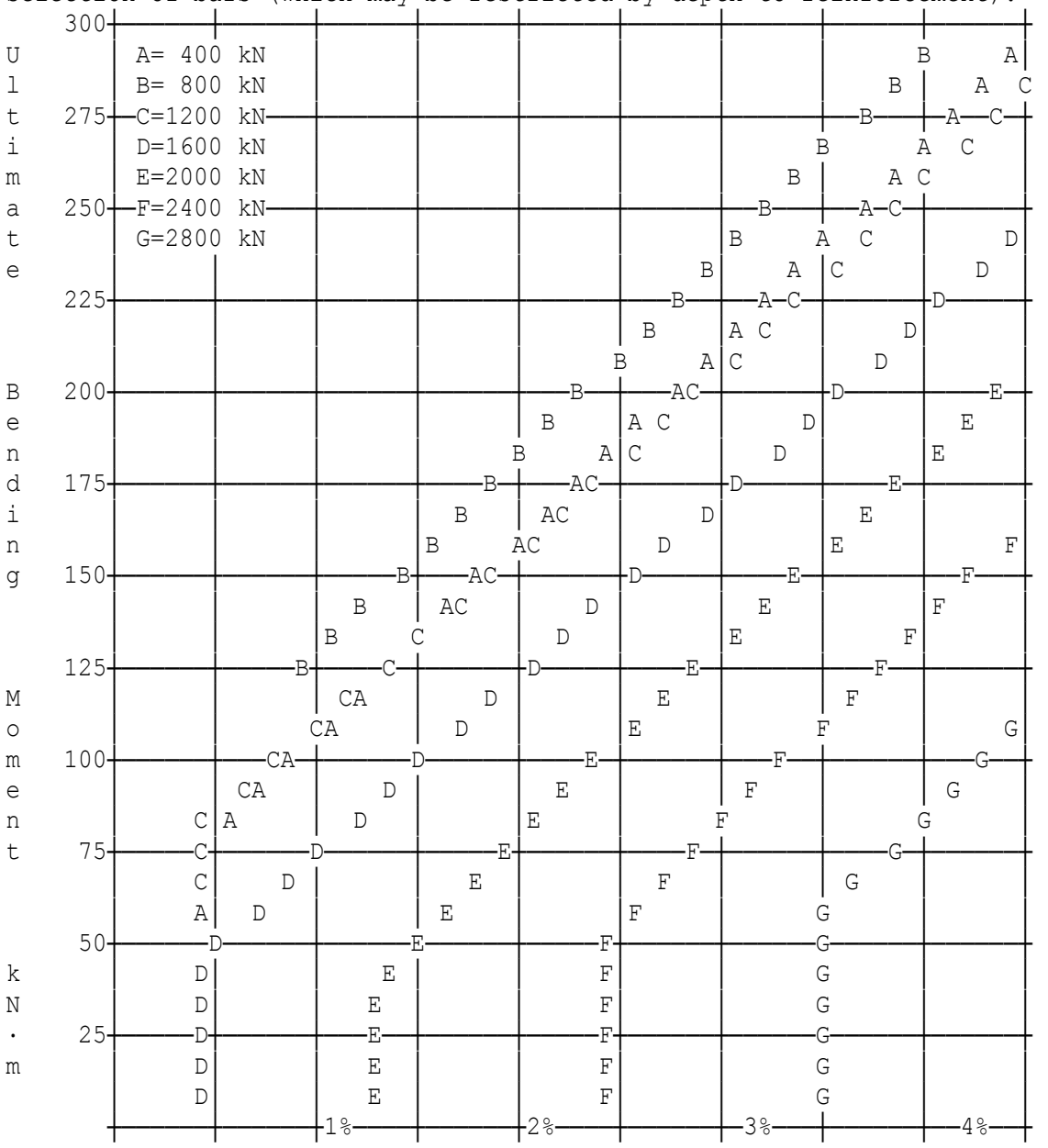

REINFORCED CONCRETE COLUMN CHECKING AID TO BS 8110
Parameters: fcu=37 fck=30 fy=500 b=300 h=400 d'=50
Every corner bar and each alternate bar in the outer layer should be supported by a link passing around the bar. No bar should be more than 150 mm from a restrained bar. Link sizes and spacing follow:

Main steel diameter	12	16	20	25	32	40
Minimum link diameter	6	6	6	8	8	10
Maximum link spacing	140	190	240	300	300	300

In the chart below: A,B,C etc. denote axial loads of values given.
When low value is not shown, the section should be designed as a beam.
Read along from moment to intercept with A,B,C etc. then down to selection of bars (which may be restricted by depth to reinforcement).

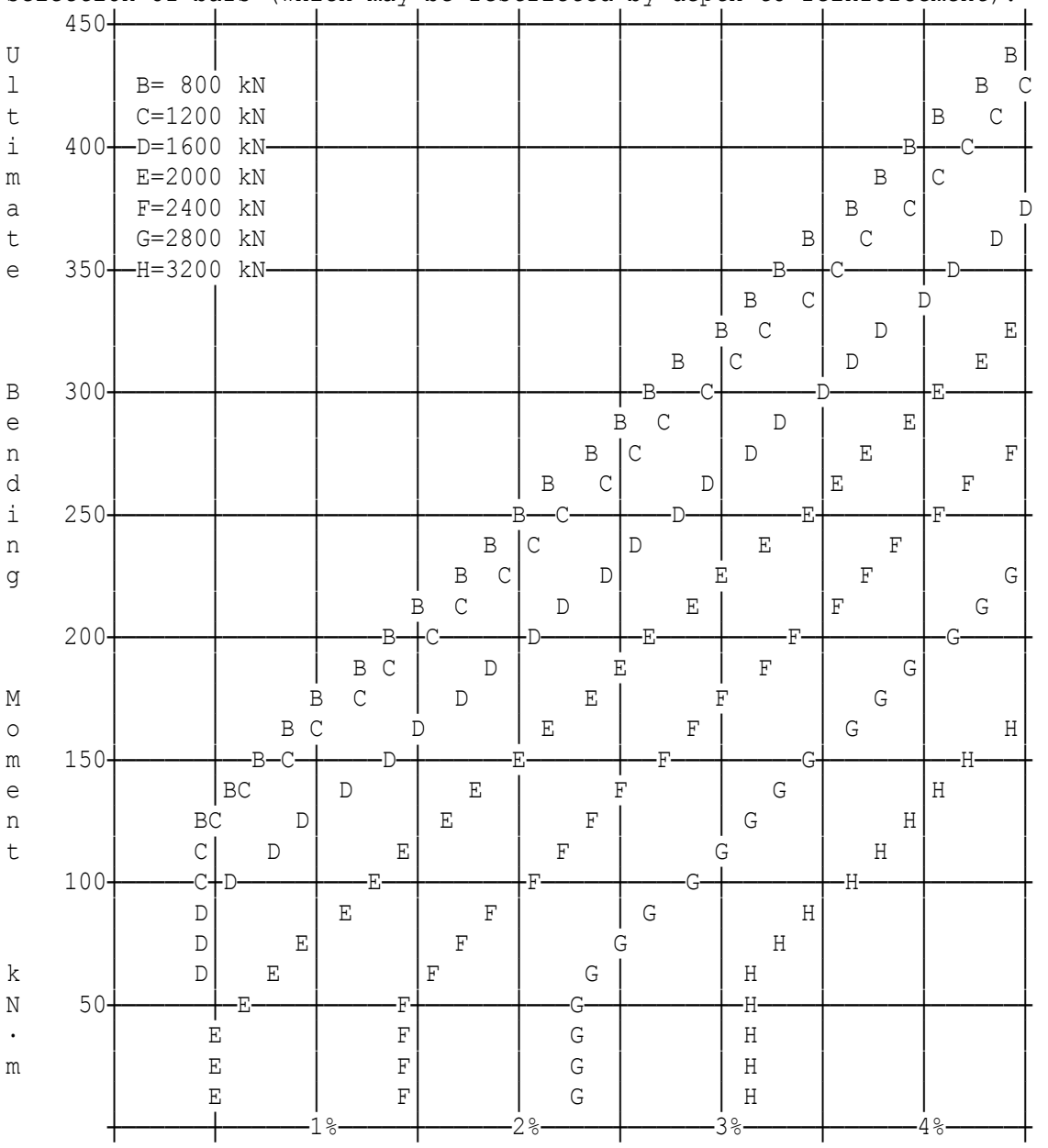

Area(mm²)	600	1200	1800	2400	3000	3600	4200	4800	5400
Number of bars reqd / Diameter of bar(mm)	4 / 16	4 / 20	8 / 16	10 / 20	6 / 25	4 / 32	8 / 25	4 / 32	4 / 40

REINFORCED CONCRETE COLUMN CHECKING AID TO BS 8110
Parameters: fcu=37 fck=30 fy=500 b=300 h=450 d'=50
Every corner bar and each alternate bar in the outer layer should be supported by a link passing around the bar. No bar should be more than 150 mm from a restrained bar. Link sizes and spacing follow:

Main steel diameter	12	16	20	25	32	40
Minimum link diameter	6	6	6	8	8	10
Maximum link spacing	140	190	240	300	300	300

In the chart below: A,B,C etc. denote axial loads of values given.
When low value is not shown, the section should be designed as a beam.
Read along from moment to intercept with A,B,C etc. then down to selection of bars (which may be restricted by depth to reinforcement).

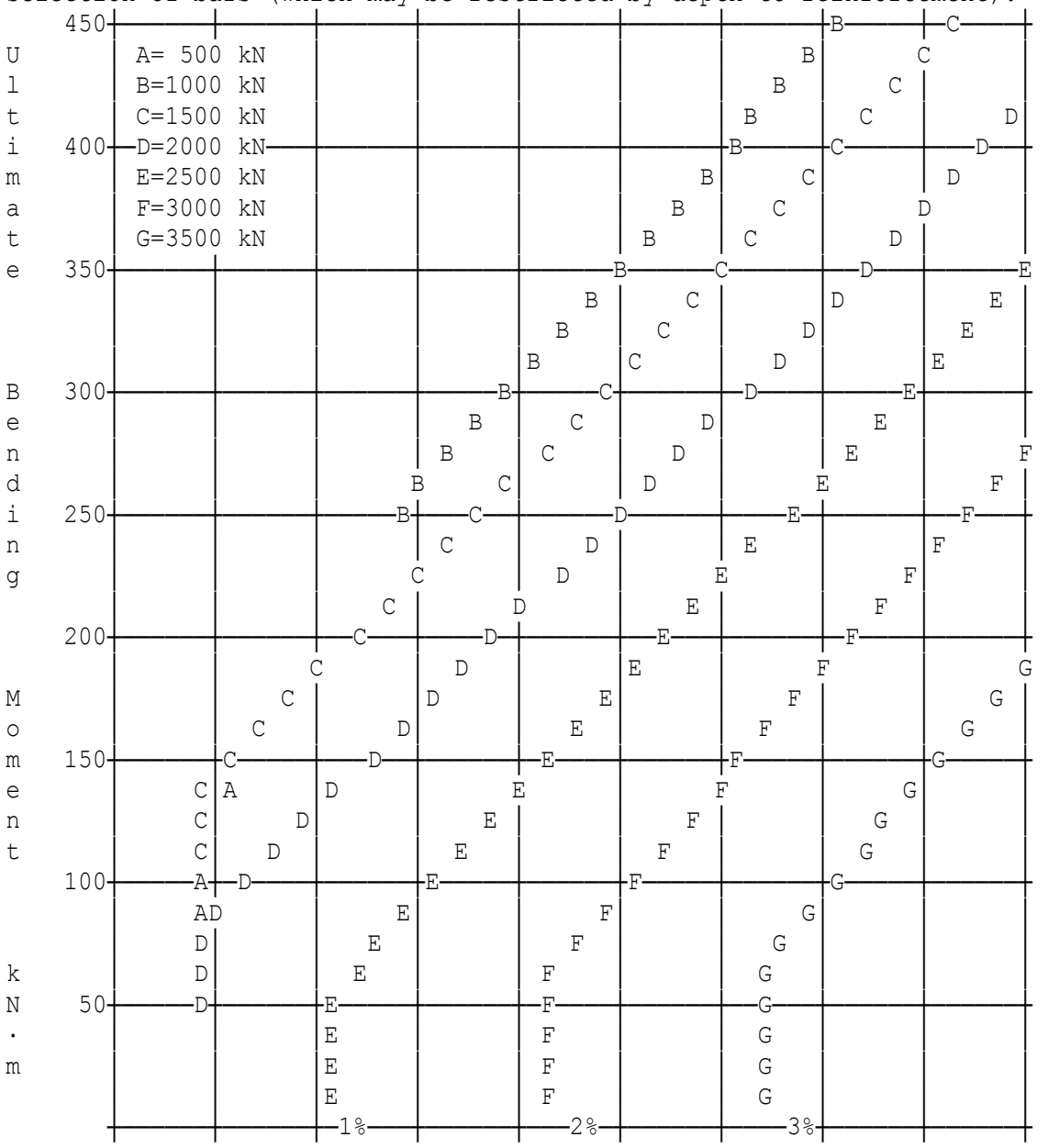

Area(mm²)	600	1200	1800	2400	3000	3600	4200	4800	5400
Number of bars reqd / Diameter of bar(mm)	4 / 16	4 / 20	8 / 16	1 640 / 221 / 056	1 28 / 12 / 60	1 6 04 / 2 23 / 5 02	1 2 8 / 2 2 / 0 5	1 604 / 324 / 250	

REINFORCED CONCRETE COLUMN CHECKING AID TO BS 8110
Parameters: fcu=37 fck=30 fy=500 b=300 h=500 d'=50
Every corner bar and each alternate bar in the outer layer should be supported by a link passing around the bar. No bar should be more than 150 mm from a restrained bar. Link sizes and spacing follow:

Main steel diameter	12	16	20	25	32	40
Minimum link diameter	6	6	6	8	8	10
Maximum link spacing	140	190	240	300	300	300

In the chart below: A,B,C etc. denote axial loads of values given.
When low value is not shown, the section should be designed as a beam.
Read along from moment to intercept with A,B,C etc. then down to selection of bars (which may be restricted by depth to reinforcement).

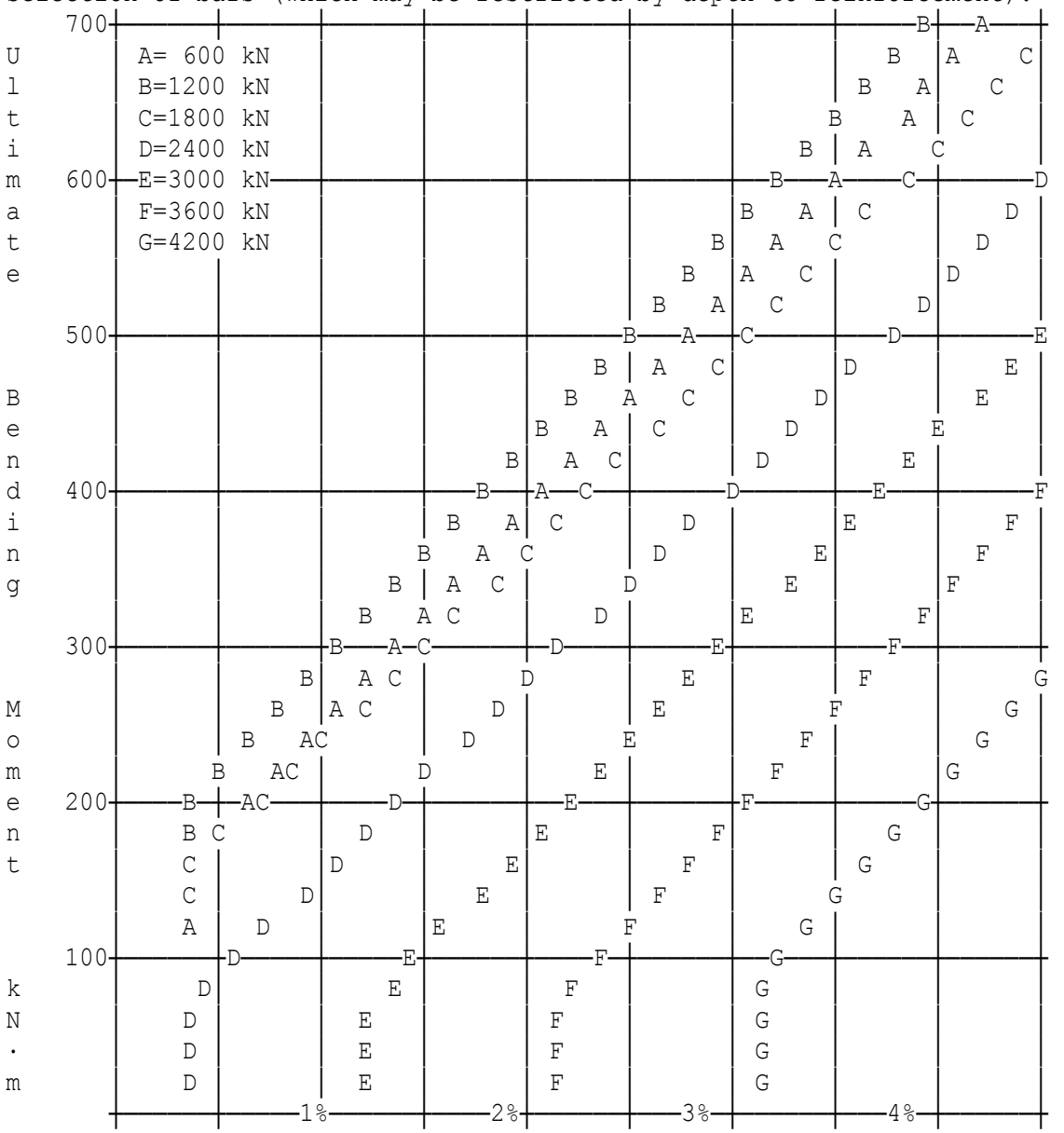

Area(mm²)	800	1600	2400	3200	4000	4800	5600	6400	7200
Number of bars reqd / Diameter of bar(mm)	4 / 16	4 / 20	8 / 22	64 / 25	8 / 20	64 / 25	104 / 20	128 / 25	8 / 32

REINFORCED CONCRETE COLUMN CHECKING AID TO EUROCODE 2
Parameters: fcu=37 fck=30 fy=500 b=300 h=300 d'=45
Every corner bar and each alternate bar in the outer layer should be supported by a link passing around the bar. No bar should be more than 150 mm from a restrained bar. Link sizes and spacing follow:

Main steel diameter	12	16	20	25	32	40
Minimum link diameter	6	6	6	8	8	10
Maximum link spacing	140	190	240	300	300	300

In the chart below: A,B,C etc. denote axial loads of values given.
When low value is not shown, the section should be designed as a beam.
Read along from moment to intercept with A,B,C etc. then down to selection of bars (which may be restricted by depth to reinforcement).

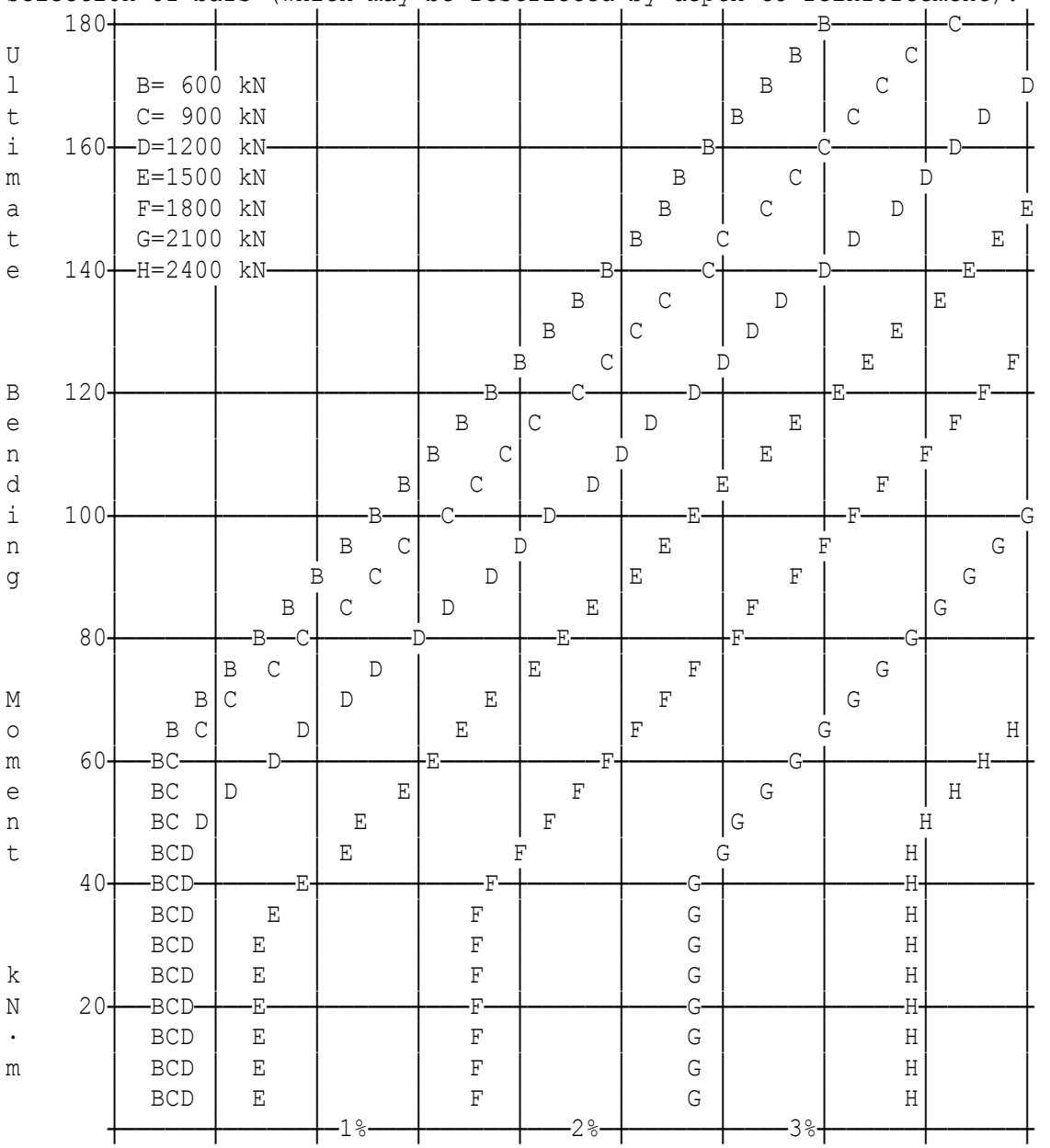

Area(mm²)	400	800	1200	1600	2000	2400	2800	3200	3600
Number of bars reqd / Diameter of bar(mm)	4 / 16	4 / 20	8 / 16	6 / 20	10 / 21 / 56	28 / 12 / 60	6 / 25	10 / 20	4 / 32

REINFORCED CONCRETE COLUMN CHECKING AID TO EUROCODE 2
Parameters: fcu=37 fck=30 fy=500 b=300 h=350 d'=50
Every corner bar and each alternate bar in the outer layer should be supported by a link passing around the bar. No bar should be more than 150 mm from a restrained bar. Link sizes and spacing follow:

Main steel diameter	12	16	20	25	32	40
Minimum link diameter	6	6	6	8	8	10
Maximum link spacing	140	190	240	300	300	300

In the chart below: A,B,C etc. denote axial loads of values given.
When low value is not shown, the section should be designed as a beam.
Read along from moment to intercept with A,B,C etc. then down to selection of bars (which may be restricted by depth to reinforcement).

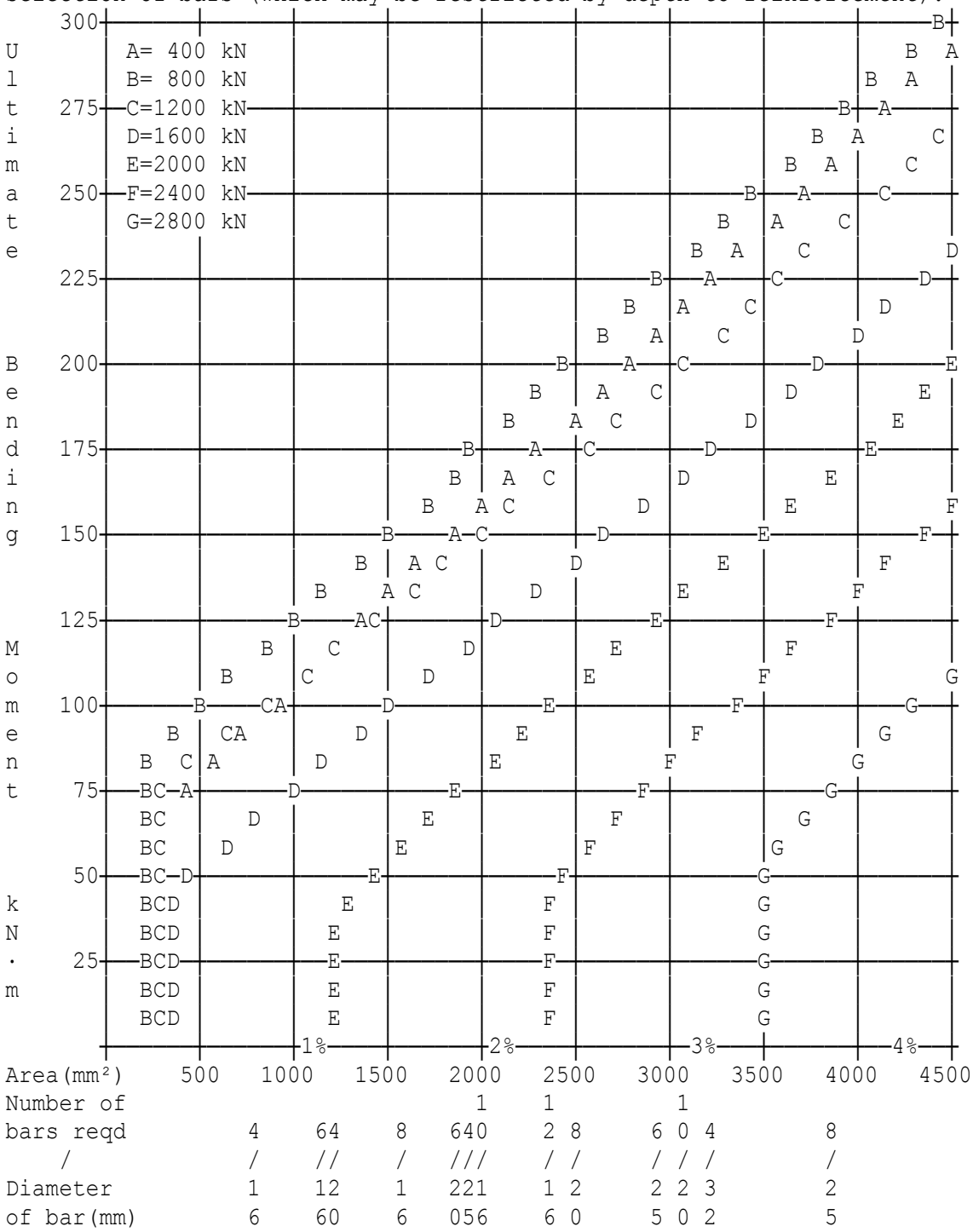

REINFORCED CONCRETE COLUMN CHECKING AID TO EUROCODE 2
Parameters: fcu=37 fck=30 fy=500 b=300 h=400 d'=50
Every corner bar and each alternate bar in the outer layer should be supported by a link passing around the bar. No bar should be more than 150 mm from a restrained bar. Link sizes and spacing follow:

Main steel diameter	12	16	20	25	32	40
Minimum link diameter	6	6	6	8	8	10
Maximum link spacing	140	190	240	300	300	300

In the chart below: A,B,C etc. denote axial loads of values given.
When low value is not shown, the section should be designed as a beam.
Read along from moment to intercept with A,B,C etc. then down to selection of bars (which may be restricted by depth to reinforcement).

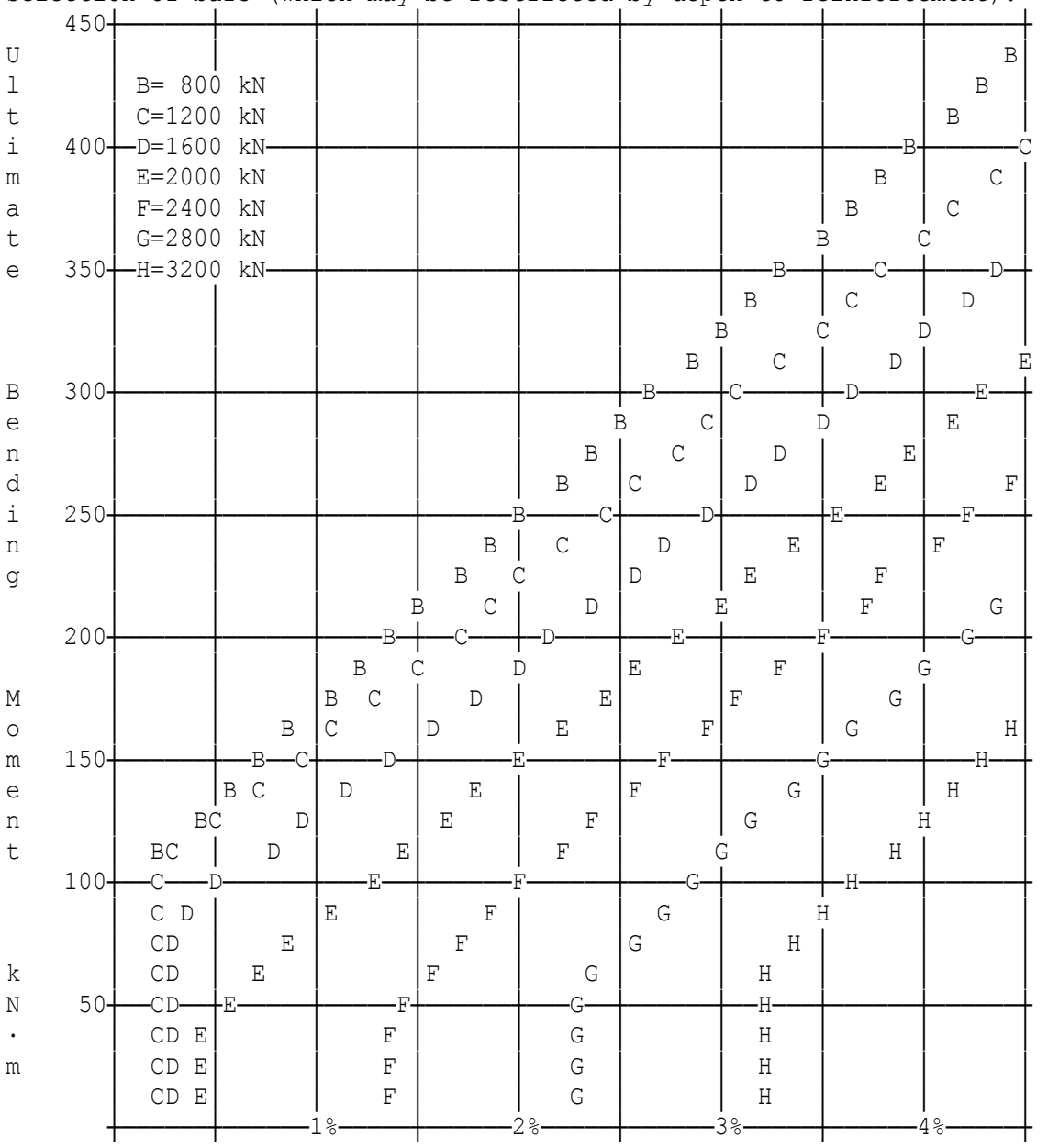

Area(mm²)	600	1200	1800	2400	3000	3600	4200	4800	5400
Number of bars reqd / Diameter of bar(mm)	4 / 16	4 / 20	8 / 16	1 640 / 221 / 056	1 28 / 12 / 60	1 6 04 / 2 23 / 5 02	1 2 8 / 2 2 / 0 5	1 604 / 324 / 250	

REINFORCED CONCRETE COLUMN CHECKING AID TO EUROCODE 2
Parameters: fcu=37 fck=30 fy=500 b=300 h=450 d'=50
Every corner bar and each alternate bar in the outer layer should be supported by a link passing around the bar. No bar should be more than 150 mm from a restrained bar. Link sizes and spacing follow:

Main steel diameter	12	16	20	25	32	40
Minimum link diameter	6	6	6	8	8	10
Maximum link spacing	140	190	240	300	300	300

In the chart below: A,B,C etc. denote axial loads of values given.
When low value is not shown, the section should be designed as a beam.
Read along from moment to intercept with A,B,C etc. then down to selection of bars (which may be restricted by depth to reinforcement).

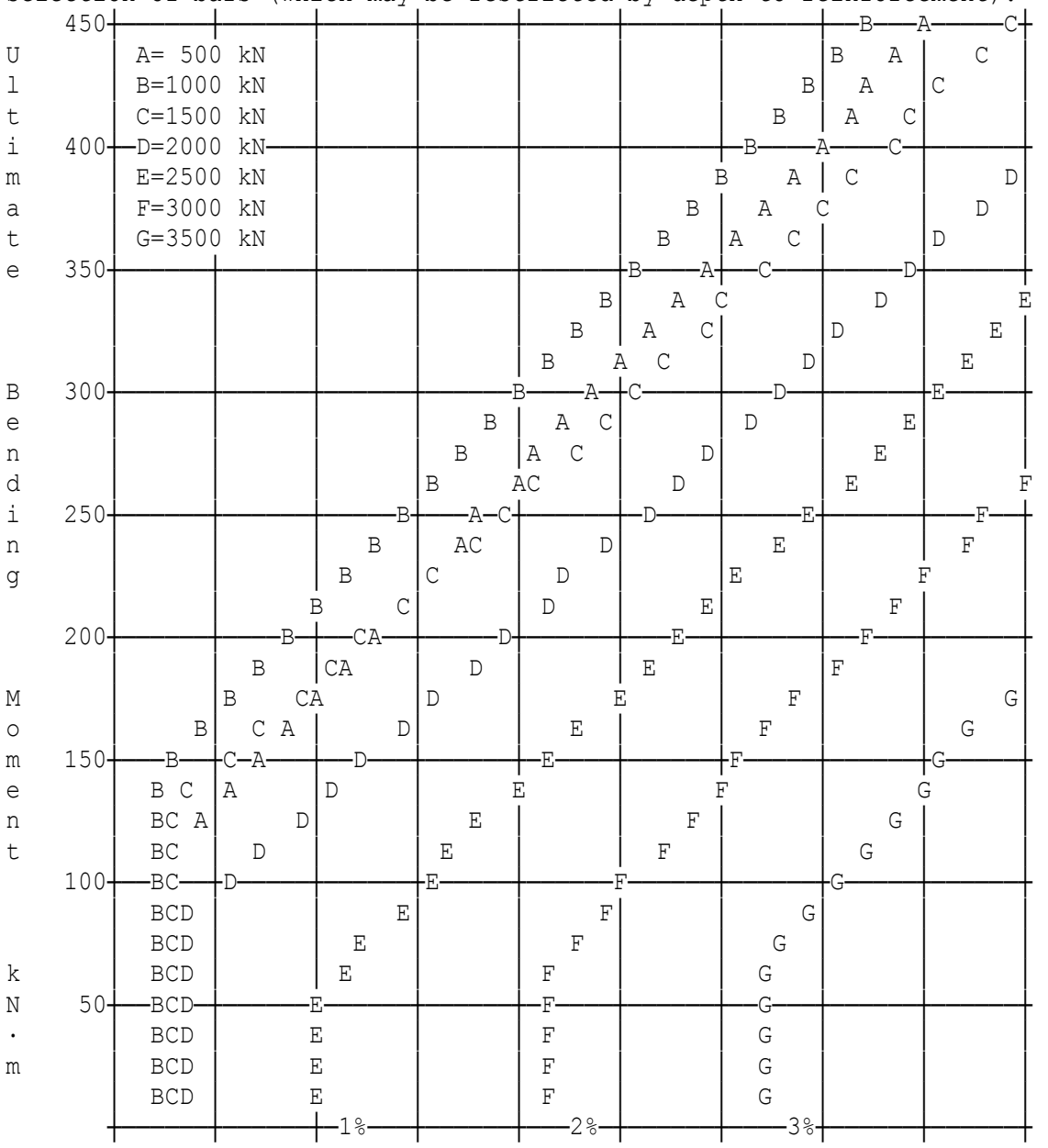

REINFORCED CONCRETE COLUMN CHECKING AID TO EUROCODE 2
Parameters: fcu=37 fck=30 fy=500 b=300 h=500 d'=50
Every corner bar and each alternate bar in the outer layer should be supported by a link passing around the bar. No bar should be more than 150 mm from a restrained bar. Link sizes and spacing follow:

Main steel diameter	12	16	20	25	32	40
Minimum link diameter	6	6	6	8	8	10
Maximum link spacing	140	190	240	300	300	300

In the chart below: A,B,C etc. denote axial loads of values given.
When low value is not shown, the section should be designed as a beam.
Read along from moment to intercept with A,B,C etc. then down to selection of bars (which may be restricted by depth to reinforcement).

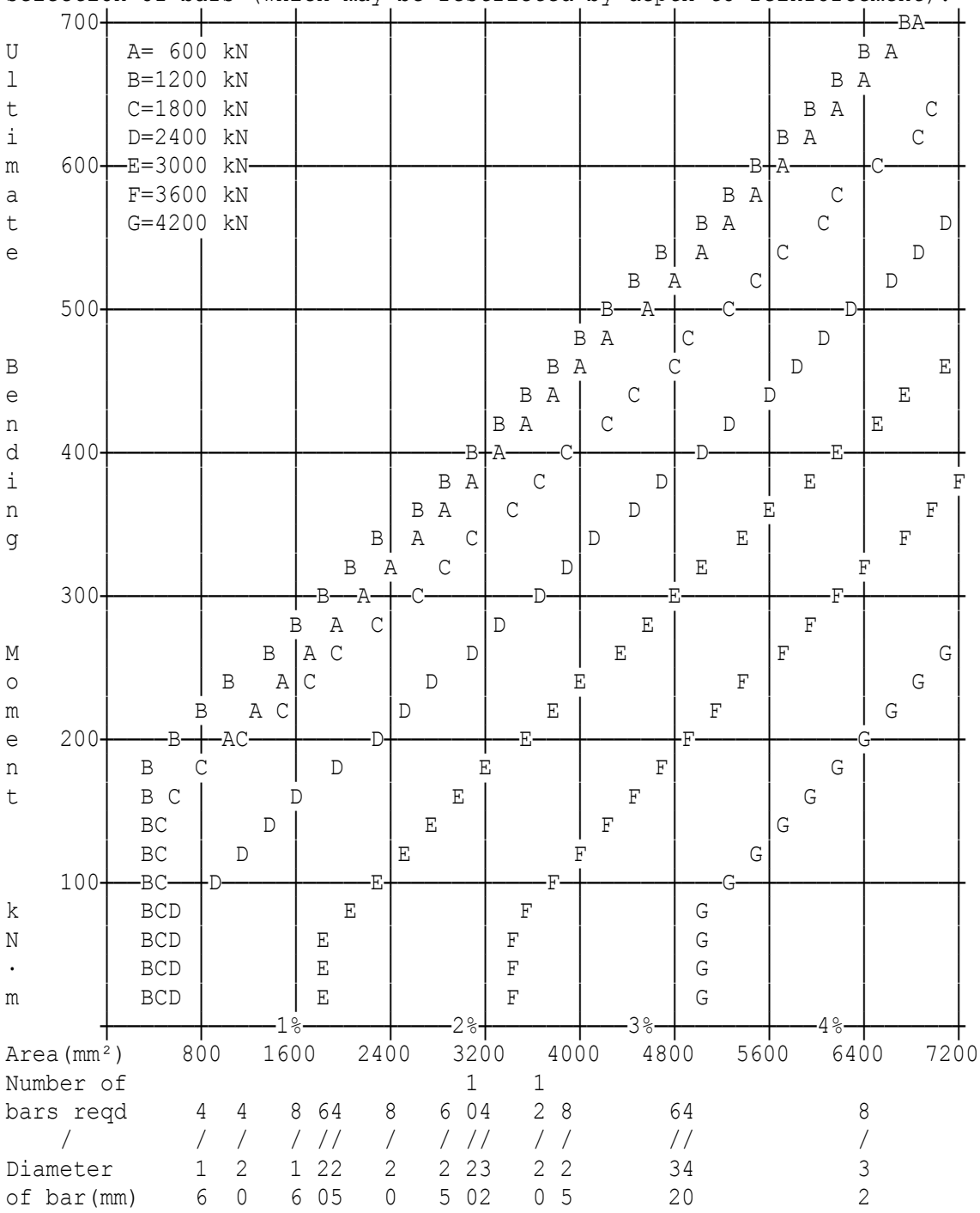

Location: Example from page xiv of 'Reinf. Concrete Design Charts'

Design of flanged beam-and-slab section to IStructE Manual

Effective width of flange =b mm

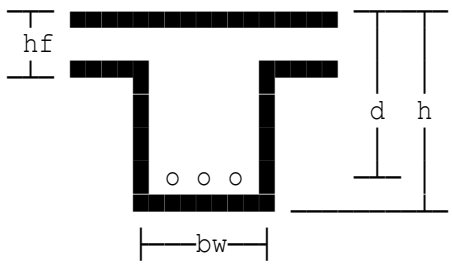

Flanged beam section

Calculations for reinforcement are in accordance with IStructE 'Manual for the design of reinforced concrete building structures' and based on simplified rectangular concrete stress-block.

BM before redistribution	Mbefor=252 kNm
Ultimate shear force	V=84 kN
Axial load due to ultimate loads	N=0 kN
Length of flanged beam	len=10 m
Overall depth of section	h=500 mm
Actual flange width	ba=2000 mm
Flange thickness	hf=100 mm
Breadth of rib	bw=300 mm
Ribbed slab=(1) flanged beam=(0)	ribslab=0
Characteristic concrete strength	fcu=35 N/mm²
Char.strength of long'l bars	fy=500 N/mm²
High-yield steel reinforcement.	
Bond type (0,1 or 2)	Type=2
Characteristic strength of links	fyv=500 N/mm²
Diameter of longitudinal bars	dia=25 mm
Diameter of links	dial=8 mm

Designated exposure condition is Moderate.
From Table 18 of IStructE Manual, minimum cover to all steel required for fcu=35 N/mm² and exposure condition 2 is 35 mm.
From Table 17 of IStructE Manual, minimum cover to main bars needed for continuous beam with a fire period of 2 hour/s is 50 mm.
As actual rib width of 300 mm exceeds minimum width of 150 mm specified in Table 17, cover may be decreased by 15 mm (Cl.4.4.2.1).
Thus min.cover to main bars to meet fire reqs. cover2=cover2-minus=35 mm
Thus minimum permissible cover to all steel is 35 mm

Concrete cover to all steel	cover=35 mm
BM after redistribution	M=252 kNm

TENSION REINFORCEMENT SUMMARY	**Characteristic strength**	**500 N/mm²**
	Diameter of bars	**25 mm**
	Number of bars	**3**
	Area required	**1386.5 mm²**
	Area provided	**1472.6 mm²**
	Percentage provided (of rib area)	**0.98175 %**
	Weight of steel provided	**11.56 kg/m**
See Manual : Clause : 4.12.3 :	**Anchorage & tension lap**	**820 mm**
	1.4 * tension lap	**1150 mm**
	2.0 * tension lap	**1630 mm**

Shear reinforcement

```
Design shear stress                v=V*1000/(bv*d)=0.62992 N/mm²
Size of tension bars at support    dias=25 mm
No.of tension bars at support      nbarss=3
From Table 27 of IStructE Manual,
design concrete shear stress       vc=TABLE 27 for percnt=1.1043, d=444.5
                                     =0.68878 N/mm²
As characteristic concrete strength is not equal to 30 N/mm²,
modify tabulated value of vc according to footnote to Table 27.
Modification factor                factor=TABLE 27.1 for fcu=35
                                         =1.053
Modified concrete shear stress     vc=vc*factor=0.72528 N/mm²
Area of 2 legs of a link           Asv=nlegs*PI*dial^2/4=100.53 mm²
Provide minimum links as specified in Table 28 of Manual.
Spacing of links along member      sv=Asv*0.87*fyv/(0.4*bv)=364.42 mm
Limit spacing to sv=0.75*d=333.38 mm (to Clause 4.4.5.3)
```

SHEAR REINFORCEMENT SUMMARY	**Characteristic strength**	**500 N/mm²**
	Diameter of bars	**8 mm**
	Number of legs	**2**
	Spacing	**330 mm**
	Approx.weight of links	**1.5974 kg/m**
	Ensure that no longitudinal bar is more than 150 mm from vertical leg.	
DEFLECTION SUMMARY	**Permissible span**	**13.58 m**
	Actual span	**10 m**

Location: Ribbed L-slab: low mom/high shear/mild steel/min exposure

Design of flanged beam-and-slab section to IStructE Manual

Effective width of flange =b mm

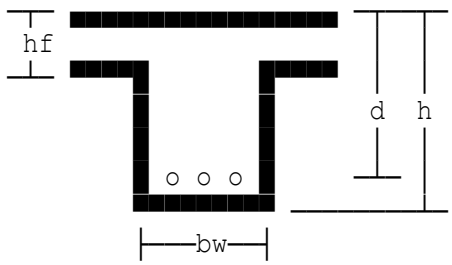

Flanged beam section

Calculations for reinforcement are in accordance with IStructE 'Manual for the design of reinforced concrete building structures' and based on simplified rectangular concrete stress-block.

BM before redistribution	Mbefor=30 kNm
Ultimate shear force	V=204 kN
Axial load due to ultimate loads	N=100 kN
Length of flanged beam	len=6 m
Overall depth of section	h=250 mm
Actual flange width	ba=1000 mm
Flange thickness	hf=100 mm
Breadth of rib	bw=300 mm
Ribbed slab=(1) flanged beam=(0)	ribslab=1
Characteristic concrete strength	fcu=30 N/mm²
Char.strength of long'l bars	fy=250 N/mm²
Mild steel reinforcement.	
Bond type (0,1 or 2)	Type=0
Characteristic strength of links	fyv=250 N/mm²
Diameter of longitudinal bars	dia=25 mm
Diameter of links	dial=8 mm

Designated exposure condition is Mild.
From Table 18 of IStructE Manual, minimum cover to all steel required for fcu=30 N/mm² and exposure condition 1 is 25 mm.
From Table 17 of Manual, minimum cover for main bars with simply-supported ribbed slab with a fire period of 1 hour/s is 25 mm.
Thus minimum permissible cover to all steel is 25 mm
Concrete cover to all steel cover=25 mm

TENSION REINFORCEMENT SUMMARY	**Characteristic strength**	**250 N/mm²**
	Diameter of bars	**25 mm**
	Number of bars	**2**
	Area required	**717.53 mm²**
	Area provided	**981.75 mm²**
	Percentage provided (of rib area)	**1.309 %**
	Weight of steel provided	**7.7067 kg/m**
See Manual : Clause : 4.12.3 :	**Anchorage & tension lap**	**660 mm**
	1.4 * tension lap	**920 mm**
	2.0 * tension lap	**1300 mm**

Shear reinforcement

Design shear stress v=V*1000/(bv*d)=3.3252 N/mm²
Longit.bars effective for shear nbarss=2
From Table 27 of IStructE Manual,
design concrete shear stress vc=TABLE 27 for percnt=1.6002, d=204.5
=0.92429 N/mm²
As v exceeds vc, shear reinforcement must be provided in a ribbed slab (see Clause 4.2.6.3).
Area of 2 legs of a link Asv=nlegs*PI*dial^2/4=100.53 mm²
Provide links to resist shear force in accordance with Clause 4.2.6.3.
Spacing of links along member sv=Asv*0.87*fyv/(bv*(v-vc))=30.357 mm
Increase spacing to about one-half of the maximum distance permitted and increase the number of link legs correspondingly.
Increase number of link legs to nlegs=INT(nlegs*0.375*d/sv)+1=6
at revised spacing of sv=0.375*d=76.688 mm

SHEAR REINFORCEMENT SUMMARY	**Characteristic strength**	**250 N/mm²**
	Diameter of bars	**8 mm**
	Number of legs	**6**
	Spacing	**70 mm**
	Approx.weight of links	**14.182 kg/m**
	Ensure that no longitudinal bar is more than 150 mm from vertical leg.	
DEFLECTION SUMMARY	**Permissible span**	**6.6184 m**
	Actual span	**6 m**

Location: Large T-beam: high moment: low shear: severe exposure

Design of flanged beam-and-slab section to IStructE Manual

Effective width of flange =b mm

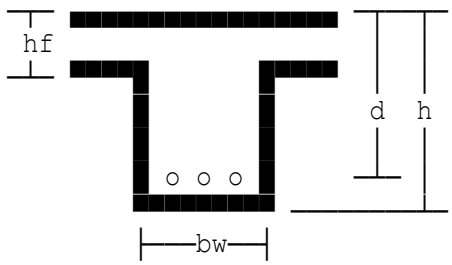

Flanged beam section

Calculations for reinforcement are in accordance with IStructE 'Manual for the design of reinforced concrete building structures' and based on simplified rectangular concrete stress-block.

BM before redistribution	Mbefor=10000 kNm
Ultimate shear force	V=1000 kN
Axial load due to ultimate loads	N=0 kN
Length of flanged beam	len=24 m
Overall depth of section	h=2000 mm
Actual flange width	ba=10000 mm
Flange thickness	hf=250 mm
Breadth of rib	bw=500 mm
Ribbed slab=(1) flanged beam=(0)	ribslab=0
Characteristic concrete strength	fcu=50 N/mm²
Char.strength of long'l bars	fy=500 N/mm²
High-yield steel reinforcement.	
Bond type (0,1 or 2)	Type=2
Characteristic strength of links	fyv=500 N/mm²
Diameter of longitudinal bars	dia=40 mm
Diameter of links	dial=10 mm

Designated exposure condition is Very Severe.
From Table 18 of IStructE Manual, minimum cover to all steel required for fcu=40 N/mm² and exposure condition 4 is 50 mm.
From Table 17 of IStructE Manual, minimum cover to main bars needed for continuous beam with a fire period of 4 hour/s is 70 mm.
As actual rib width of 500 mm exceeds minimum width of 240 mm specified in Table 17, cover may be decreased by 15 mm (Cl.4.4.2.1).
Thus min.cover to main bars to meet fire reqs. cover2=cover2-minus=55 mm
Thus minimum permissible cover to all steel is 50 mm

Concrete cover to all steel	cover=50 mm
BM after redistribution	M=10000 kNm

TENSION	**Characteristic strength**	**500 N/mm²**
REINFORCEMENT	**Diameter of bars**	**40 mm**
SUMMARY	**Number of bars**	**11**
	Area required	**12737 mm²**
	Area provided	**13823 mm²**
	Percentage provided (of rib area)	**1.3823 %**
	Weight of steel provided	**108.51 kg/m**
See Manual : Clause : 4.12.3 :	**Anchorage & tension lap**	**1180 mm**
	1.4 * tension lap	**1660 mm**
	2.0 * tension lap	**2360 mm**

Shear reinforcement

```
Design shear stress                v=V*1000/(bv*d)=1.0417 N/mm²
Size of tension bars at support    dias=40 mm
No.of tension bars at support      nbarss=11
From Table 27 of IStructE Manual,
design concrete shear stress       vc=TABLE 27 for percnt=1.4399, d=1920
                                     =0.74918 N/mm²
As characteristic concrete strength is not equal to 30 N/mm²,
modify tabulated value of vc according to footnote to Table 27.
Modification factor                factor=TABLE 27.1 for fcu=50
                                         =1.1
Modified concrete shear stress     vc=vc*factor=0.8241 N/mm²
Area of 2 legs of a link           Asv=nlegs*PI*dial^2/4=157.08 mm²
Provide minimum links as specified in Table 28 of Manual.
Spacing of links along member      sv=Asv*0.87*fyv/(0.4*bv)=341.65 mm
Increase spacing to 300 mm together with a corresponding increase
in the number of link legs to      nlegs=INT(nlegs*300/sv)+1=2
at revised spacing of              sv=300 mm
```

SHEAR	**Characteristic strength**	**500 N/mm²**
REINFORCEMENT	**Diameter of bars**	**10 mm**
SUMMARY	**Number of legs**	**2**
	Spacing	**300 mm**
	Approx.weight of links	**9.4941 kg/m**
	Ensure that no longitudinal bar is more than 150 mm from vertical leg.	

DEFLECTION	**Permissible span**	**25.53 m**
SUMMARY	**Actual span**	**24 m**

Location: Ex1 - Default example

Bending in flanged beams

Calculations are in accordance with EC2: Design of concrete structures and assume the use of a simplified rectangular concrete stress-block and that the depth to the neutral axis is restricted to 0.45*d.

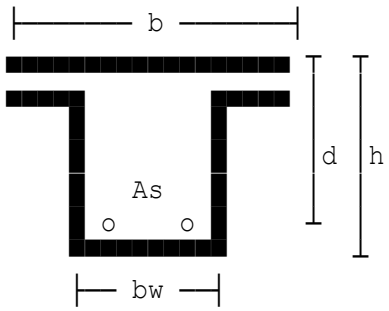

Moment before redistribution	Mbef=600 kNm
Shear force due to ultimate loads	VEd=267 kN
Axial load due to ultimate loads	NEd=0 kN
Length of beam/slab	L=8.2 m
Overall depth of section	h=650 mm
Actual flange width	ba=3350 mm
Flange thickness	hf=200 mm
Breadth of rib	bw=350 mm

Section being analysed is considered as non-continuous.

Char yield strength of r'ment	fyk=500 N/mm²
Max.aggregate size (for bar spc.)	hagg=20 mm
Diameter of tension bars	dia=25 mm
Diameter of link legs	dial=8 mm
BM after redistribution	M=600 kNm

Section being considered is a T-beam.

DESIGN SUMMARY	**Overall depth**	**650 mm**
	Effective depth	**580 mm**
	Flange width	**2590 mm**
	Web width	**350 mm**
FLEXURE	**Parameter K**	**0.023**
	Parameter K'	**0.1684**
	Lever arm ratio z/d	**0.95**
TENSION REINFORCEMENT	**Steel area required**	**2505 mm²**
	Steel area provided	**2945 mm²**
	Diameter of bars	**25 mm**
	Number of bars	**6**
	Steel percentage req.	**0.1667 %**
	Minimum area of steel	**305.8 mm²**
	Maximum area of steel	**67340 mm²**

Shear check

Design shear stress	vEd=VEd*10^3/(0.9*bw*d)=1.461 N/mm²
Concrete strut capacity	vRdm=0.124*fck*(1-fck/250)=3.274 N/mm²
Angle of inclination of strut	theta'=22°
Number of shear legs	nsl=2
Chosen spacing	s=200 mm

SHEAR SUMMARY	**Design shear force**	**267 kN**
	Design shear stress	**1.461 N/mm²**
	Concrete strut capacity	**3.274 N/mm²**
	Area/spacing ratio	**0.4706**
	Diameter of links	**8 mm**
	Area of links	**100 mm²**
	Maximum spacing	**213 mm**
	Actual spacing	**200 mm**

Deflection

Actual span to depth ratio	l'd=L*1000/d=14.14
Allowable span/depth ratio	l'da=k*N*F1*F2*F3=79.14
Absolute value of span/depth	l'da=40*k=40

DESIGN	**Actual l/d ratio**	**14.14**
SUMMARY	**Basic l/d ratio**	**98.54**
DEFLECTION	**Span factor**	**1**
	Flange beam factor F1	**0.8**
	Long spans factor F2	**0.8537**
	Steel stress factor F3	**1.176**
	Allowable l/d ratio	**40**

Location: Ex2 - Hogging moment (breadth of flange b=bw)

Bending in flanged beams

Calculations are in accordance with EC2: Design of concrete structures and assume the use of a simplified rectangular concrete stress-block and that the depth to the neutral axis is restricted to 0.45*d.

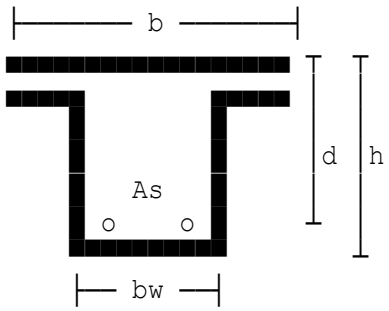

Moment before redistribution	Mbef=600 kNm
Shear force due to ultimate loads	VEd=267 kN
Axial load due to ultimate loads	NEd=0 kN
Length of beam/slab	L=8.2 m
Overall depth of section	h=650 mm
Actual flange width	ba=3350 mm
Flange thickness	hf=200 mm
Breadth of rib	bw=350 mm

Section being analysed is considered as continuous.
Section considered has a hogging moment.

Char yield strength of r'ment	fyk=500 N/mm²
Max.aggregate size (for bar spc.)	hagg=20 mm
Diameter of tension bars	dia=25 mm
Diameter of link legs	dial=8 mm
BM after redistribution	M=600 kNm
Diameter of compression bars	diac=20 mm
Depth to compression steel	d2=55 mm

DESIGN	**Overall depth**	**650 mm**
SUMMARY	**Effective depth**	**580 mm**
	Width of section	**350 mm**
FLEXURE	**Parameter K**	**0.1699**
	Parameter K'	**0.1684**
	Lever arm ratio z/d	**0.8185**
TENSION REINFORCEMENT	**Steel area provided**	**2945 mm²**
	Diameter of bars	**25 mm**
	Number of bars	**6**
	Steel area required	**2905 mm²**
	Steel percentage req.	**1.431 %**
	Minimum area of steel	**305.8 mm²**
	Maximum area of steel	**9100 mm²**
COMPRESSION REINFORCEMENT	**Steel area provided**	**628.3 mm²**
	Diameter of bars	**20 mm**
	Number of bars	**2**
	Steel area required	**22.68 mm²**
	Minimum area required	**455 mm²**

Shear check

Design shear stress	vEd=VEd*10^3/(0.9*bw*d)=1.461 N/mm²
Concrete strut capacity	vRdm=0.124*fck*(1-fck/250)=3.274 N/mm²
Angle of inclination of strut	theta'=22°
Number of shear legs	nsl=2
Chosen spacing	s=200 mm

SHEAR SUMMARY	**Design shear force**	**267 kN**
	Design shear stress	**1.461 N/mm²**
	Concrete strut capacity	**3.274 N/mm²**
	Area/spacing ratio	**0.4706**
	Diameter of links	**8 mm**
	Area of links	**100 mm²**
	Maximum spacing	**213 mm**
	Actual spacing	**200 mm**

Location: Ex3 - Breadth of flange 'b' defined by user

Bending in flanged beams

Calculations are in accordance with EC2: Design of concrete structures and assume the use of a simplified rectangular concrete stress-block and that the depth to the neutral axis is restricted to 0.45*d.

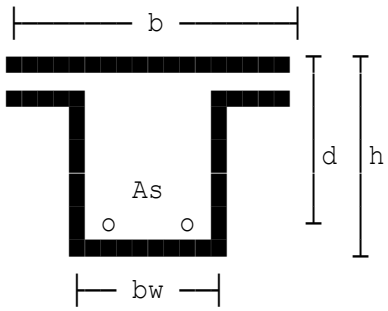

Moment before redistribution	Mbef=600 kNm
Shear force due to ultimate loads	VEd=267 kN
Axial load due to ultimate loads	NEd=0 kN
Length of beam/slab	L=8.2 m
Overall depth of section	h=650 mm
Actual flange width	ba=3350 mm
Flange thickness	hf=200 mm
Breadth of rib	bw=350 mm

Section being analysed is considered as non-continuous.

Char yield strength of r'ment	fyk=500 N/mm²
Max.aggregate size (for bar spc.)	hagg=20 mm
Diameter of tension bars	dia=25 mm
Diameter of link legs	dial=8 mm
BM after redistribution	M=600 kNm
Breadth of flange	b=3350 mm

DESIGN	**Overall depth**	**650 mm**
SUMMARY	**Effective depth**	**580 mm**
	Flange width	**3350 mm**
	Web width	**350 mm**
FLEXURE	**Parameter K**	**0.0177**
	Parameter K'	**0.1684**
	Lever arm ratio z/d	**0.95**
TENSION REINFORCEMENT	**Steel area required**	**2505 mm²**
	Steel area provided	**2945 mm²**
	Diameter of bars	**25 mm**
	Number of bars	**6**
	Steel percentage req.	**0.1289 %**
	Minimum area of steel	**305.8 mm²**
	Maximum area of steel	**87100 mm²**

Shear check

Design shear stress	vEd=VEd*10^3/(0.9*bw*d)=1.461 N/mm²
Concrete strut capacity	vRdm=0.124*fck*(1-fck/250)=3.274 N/mm²
Angle of inclination of strut	theta'=22°
Number of shear legs	nsl=2
Chosen spacing	s=200 mm

SHEAR SUMMARY	**Design shear force**	**267 kN**
	Design shear stress	**1.461 N/mm²**
	Concrete strut capacity	**3.274 N/mm²**
	Area/spacing ratio	**0.4706**
	Diameter of links	**8 mm**
	Area of links	**100 mm²**
	Maximum spacing	**213 mm**
	Actual spacing	**200 mm**

Deflection

Actual span to depth ratio	l'd=L*1000/d=14.14
Allowable span/depth ratio	l'da=k*N*F1*F2*F3=119.3
Absolute value of span/depth	l'da=40*k=40

DESIGN	**Actual l/d ratio**	**14.14**
SUMMARY	**Basic l/d ratio**	**148.6**
DEFLECTION	**Span factor**	**1**
	Flange beam factor F1	**0.8**
	Long spans factor F2	**0.8537**
	Steel stress factor F3	**1.176**
	Allowable l/d ratio	**40**

Location: Ex4 - As Default example but with sym=0

Bending in flanged beams

Calculations are in accordance with EC2: Design of concrete structures and assume the use of a simplified rectangular concrete stress-block and that the depth to the neutral axis is restricted to 0.45*d.

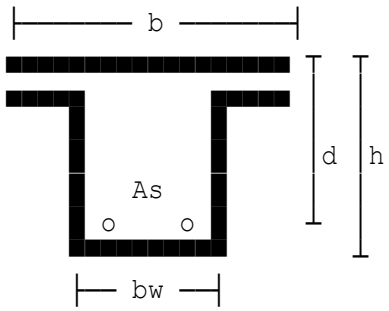

Moment before redistribution	Mbef=600 kNm
Shear force due to ultimate loads	VEd=267 kN
Axial load due to ultimate loads	NEd=0 kN
Length of beam/slab	L=8.2 m
Overall depth of section	h=650 mm
Actual flange width	ba=3350 mm
Flange thickness	hf=200 mm
Breadth of rib	bw=350 mm

Section being analysed is considered as non-continuous.

Char yield strength of r'ment	fyk=500 N/mm²
Max.aggregate size (for bar spc.)	hagg=20 mm
Diameter of tension bars	dia=25 mm
Diameter of link legs	dial=8 mm
BM after redistribution	M=600 kNm

Section being considered is a T-beam.
NOTE: Clear distances vary.

DESIGN SUMMARY	**Overall depth**	**650 mm**
	Effective depth	**580 mm**
	Flange width	**2590 mm**
	Web width	**350 mm**
FLEXURE	**Parameter K**	**0.023**
	Parameter K'	**0.1684**
	Lever arm ratio z/d	**0.95**
TENSION REINFORCEMENT	**Steel area required**	**2505 mm²**
	Steel area provided	**2945 mm²**
	Diameter of bars	**25 mm**
	Number of bars	**6**
	Steel percentage req.	**0.1667 %**
	Minimum area of steel	**305.8 mm²**
	Maximum area of steel	**67340 mm²**

Shear check

Design shear stress	vEd=VEd*10^3/(0.9*bw*d)=1.461 N/mm²
Concrete strut capacity	vRdm=0.124*fck*(1-fck/250)=3.274 N/mm²
Angle of inclination of strut	theta'=22°
Number of shear legs	nsl=2
Chosen spacing	s=200 mm

SHEAR SUMMARY	**Design shear force**	**267 kN**
	Design shear stress	**1.461 N/mm²**
	Concrete strut capacity	**3.274 N/mm²**
	Area/spacing ratio	**0.4706**
	Diameter of links	**8 mm**
	Area of links	**100 mm²**
	Maximum spacing	**213 mm**
	Actual spacing	**200 mm**

Deflection

Actual span to depth ratio	l'd=L*1000/d=14.14
Allowable span/depth ratio	l'da=k*N*F1*F2*F3=79.14
Absolute value of span/depth	l'da=40*k=40

DESIGN	**Actual l/d ratio**	**14.14**
SUMMARY	**Basic l/d ratio**	**98.54**
DEFLECTION	**Span factor**	**1**
	Flange beam factor F1	**0.8**
	Long spans factor F2	**0.8537**
	Steel stress factor F3	**1.176**
	Allowable l/d ratio	**40**

Location: Ex5 - As Ax1 but with flange=0 and sym=0

Bending in flanged beams

Calculations are in accordance with EC2: Design of concrete structures and assume the use of a simplified rectangular concrete stress-block and that the depth to the neutral axis is restricted to 0.45*d.

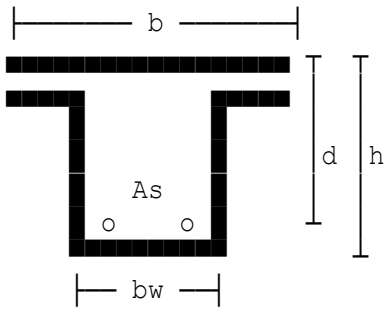

Moment before redistribution	Mbef=600 kNm
Shear force due to ultimate loads	VEd=267 kN
Axial load due to ultimate loads	NEd=0 kN
Length of beam/slab	L=8.2 m
Overall depth of section	h=650 mm
Actual flange width	ba=3350 mm
Flange thickness	hf=200 mm
Breadth of rib	bw=350 mm

Section being analysed is considered as continuous.
Section considered has a sagging moment.

Char yield strength of r'ment	fyk=500 N/mm²
Max.aggregate size (for bar spc.)	hagg=20 mm
Diameter of tension bars	dia=25 mm
Diameter of link legs	dial=8 mm
BM after redistribution	M=600 kNm
Breadth of flange	b=3350 mm

DESIGN	**Overall depth**	**650 mm**
SUMMARY	**Effective depth**	**580 mm**
	Flange width	**3350 mm**
	Web width	**350 mm**
FLEXURE	**Parameter K**	**0.0177**
	Parameter K'	**0.1684**
	Lever arm ratio z/d	**0.95**
TENSION REINFORCEMENT	**Steel area required**	**2505 mm²**
	Steel area provided	**2945 mm²**
	Diameter of bars	**25 mm**
	Number of bars	**6**
	Steel percentage req.	**0.1289 %**
	Minimum area of steel	**305.8 mm²**
	Maximum area of steel	**87100 mm²**

Shear check

Design shear stress	vEd=VEd*10^3/(0.9*bw*d)=1.461 N/mm²
Concrete strut capacity	vRdm=0.124*fck*(1-fck/250)=3.274 N/mm²
Angle of inclination of strut	theta'=22°
Number of shear legs	nsl=2
Chosen spacing	s=200 mm

SHEAR SUMMARY	**Design shear force**	**267 kN**
	Design shear stress	**1.461 N/mm²**
	Concrete strut capacity	**3.274 N/mm²**
	Area/spacing ratio	**0.4706**
	Diameter of links	**8 mm**
	Area of links	**100 mm²**
	Maximum spacing	**213 mm**
	Actual spacing	**200 mm**

Deflection

Actual span to depth ratio	l'd=L*1000/d=14.14
Allowable span/depth ratio	l'da=k*N*F1*F2*F3=119.3
Absolute value of span/depth	l'da=40*k=40

DESIGN	**Actual l/d ratio**	**14.14**
SUMMARY	**Basic l/d ratio**	**148.6**
DEFLECTION	**Span factor**	**1**
	Flange beam factor F1	**0.8**
	Long spans factor F2	**0.8537**
	Steel stress factor F3	**1.176**
	Allowable l/d ratio	**40**

Location: Typical flanged beam

Design of flanged beam-and-slab section to BS8110

Effective width of flange = b mm
Design to BS8110(1997), partial safety factor for steel gammaS=1.15

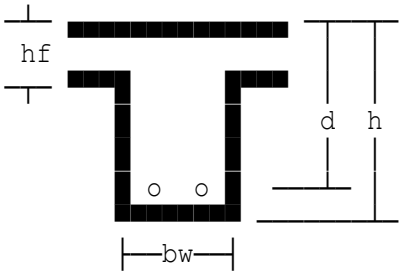

Flanged beam section

Calculations for reinforcement are in accordance with Clauses 3.4.4.4 and 3.4.4.5 of BS8110: Part 1 and are based on the simplified concrete stress block.

BM before redistribution	Mbefor=165 kNm
Ultimate shear force	V=110.1 kN
Axial load due to ultimate loads	N=0 kN
Length of flanged beam	len=6 m
Overall depth of section	h=350 mm
Actual flange width	ba=2000 mm
Flange thickness	hf=100 mm
Breadth of rib	bw=250 mm
Characteristic concrete strength	fcu=30 N/mm²
Char.strength of long'l bars	fy=500 N/mm²
High-yield steel reinforcement.	
Bond type (0,1 or 2)	Type=2
Characteristic strength of links	fyv=500 N/mm²
Diameter of longitudinal bars	dia=25 mm
Diameter of links	dial=8 mm
Designated exposure class is XC2	
Specified fixing tolerance	tol=10 mm

From Table 3.4 of BS8110, minimum cover needed to all steel for continuous beam with a fire period of 2 hour/s is 30 mm
Thus minimum permissible cover to all steel is 35 mm
Nominal concrete cover cover=35 mm
From Figure 3.2 of BS8110, minimum possible rib width complying with a fire period of 2 hour/s is 125 mm
BM after redistribution M=165 kNm

TENSION REINFORCEMENT SUMMARY	**Characteristic strength**	**500 N/mm²**
	Diameter of bars	**25 mm**
	Number of bars	**3**
	Area required	**1384.8 mm²**
	Area provided	**1472.6 mm²**
	Percentage of rib prov.	**1.683 %**
	Weight of bars provided	**11.56 kg/m**
See BS 8110 : Part 1 : Cl.3.12.8.13	**Anchorage & tension lap**	**940 mm**
	1.4 * tension lap	**1310 mm**
	2.0 * tension lap	**1870 mm**

Shear reinforcement

It is assumed that at least nominal shear steel will be provided.
Size of tension bars at support dias=25 mm
No.of tension bars at support nbarss=3

SHEAR REINFORCEMENT SUMMARY	**Characteristic strength**	**500 N/mm²**
	Diameter of bars	**8 mm**
	Number of legs	**2**
	Spacing	**220 mm**
	Approx.weight of links	**1.6787 kg/m**
	Ensure that no longitudinal bar is more than 150 mm from vertical leg.	

DEFLECTION SUMMARY	**Permissible span**	**6.5248 m**
	Actual span	**6 m**

Location: Small cantilevered L-beam: low mom/high shear/mild steel

Design of flanged beam-and-slab section to BS8110

Effective width of flange = b mm
Design to BS8110(1997), partial safety factor for steel gammaS=1.15

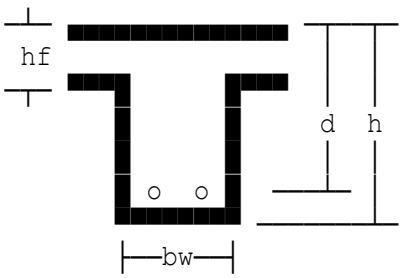

Flanged beam section

Calculations for reinforcement are in accordance with Clauses 3.4.4.4 and 3.4.4.5 of BS8110: Part 1 and are based on the simplified concrete stress block.

BM before redistribution	Mbefor=30 kNm
Ultimate shear force	V=204 kN
Axial load due to ultimate loads	N=100 kN
Length of flanged beam	len=3 m
Overall depth of section	h=250 mm
Actual flange width	ba=1000 mm
Flange thickness	hf=100 mm
Breadth of rib	bw=300 mm
Characteristic concrete strength	fcu=25 N/mm²
Char.strength of long'l bars	fy=250 N/mm²
Mild steel reinforcement.	
Bond type (0,1 or 2)	Type=0
Characteristic strength of links	fyv=250 N/mm²
Diameter of longitudinal bars	dia=25 mm
Diameter of links	dial=8 mm
Designated exposure class is XC1	
Specified fixing tolerance	tol=10 mm

From Table 3.4 of BS8110, minimum cover needed to all steel for continuous beam with a fire period of 1 hour/s is 20 mm
Thus minimum permissible cover to all steel is 25 mm

Nominal concrete cover	cover=25 mm

From Figure 3.2 of BS8110, minimum possible rib width complying with a fire period of 1 hour/s is 125 mm

BM after redistribution	M=30 kNm

TENSION	**Characteristic strength**	**250 N/mm²**
REINFORCEMENT	**Diameter of bars**	**25 mm**
SUMMARY	**Number of bars**	**2**
	Area required	**723.28 mm²**
	Area provided	**981.75 mm²**
	Percentage of rib prov.	**1.309 %**
	Weight of bars provided	**7.7067 kg/m**
See BS 8110	**Anchorage & tension lap**	**720 mm**
: Part 1 :	**1.4 * tension lap**	**1010 mm**
Cl.3.12.8.13	**2.0 * tension lap**	**1430 mm**

Shear reinforcement

It is assumed that at least nominal shear steel will be provided.
Size of tension bars at support dias=25 mm
No.of tension bars at support nbarss=2

SHEAR REINFORCEMENT SUMMARY	**Characteristic strength**	**250 N/mm²**
	Diameter of bars	**8 mm**
	Number of legs	**6**
	Spacing	**70 mm**
	Approx.weight of links	**14.182 kg/m**
	Ensure that no longitudinal bar is more than 150 mm from vertical leg.	

DEFLECTION SUMMARY	**Permissible span**	**8.5841 m**
	Actual span	**3 m**

Copyright 1986-2024 Fitzroy Systems Ltd.

Location: Large continuous T-beam: high mom/low shr/high-yield steel

Design of flanged beam-and-slab section to BS8110

Effective width of flange = b mm
Design to BS8110(1997), partial safety factor for steel gammaS=1.15

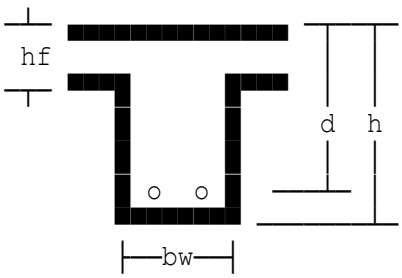

Flanged beam section

Calculations for reinforcement are in accordance with Clauses 3.4.4.4 and 3.4.4.5 of BS8110: Part 1 and are based on the simplified concrete stress block.

BM before redistribution	Mbefor=10000 kNm
Ultimate shear force	V=1000 kN
Axial load due to ultimate loads	N=0 kN
Length of flanged beam	len=26.75 m
Overall depth of section	h=2250 mm
Actual flange width	ba=10000 mm
Flange thickness	hf=250 mm
Breadth of rib	bw=500 mm
Characteristic concrete strength	fcu=50 N/mm²
Char.strength of long'l bars	fy=500 N/mm²
High-yield steel reinforcement.	
Bond type (0,1 or 2)	Type=2
Characteristic strength of links	fyv=500 N/mm²
Diameter of longitudinal bars	dia=40 mm
Diameter of links	dial=10 mm
Designated exposure class is XD1	
Specified fixing tolerance	tol=10 mm

From Table 3.4 of BS8110, minimum cover needed to all steel for continuous beam with a fire period of 4 hour/s is 50 mm
Thus minimum permissible cover to all steel is 50 mm
Additional measures are necessary to reduce the risks of spalling (see Section 4 of BS8110: Part 2: 1985).

Nominal concrete cover	cover=50 mm

From Figure 3.2 of BS8110, minimum possible rib width complying with a fire period of 4 hour/s is 175 mm

BM after redistribution	M=10000 kNm

TENSION REINFORCEMENT SUMMARY	**Characteristic strength**	**500 N/mm²**
	Diameter of bars	**40 mm**
	Number of bars	**9**
	Area required	**11157 mm²**
	Area provided	**11310 mm²**
	Percentage of rib prov.	**1.0053 %**
	Weight of bars provided	**88.781 kg/m**
See BS 8110 : Part 1 : Cl.3.12.8.13	**Anchorage & tension lap**	**1220 mm**
	1.4 * tension lap	**1700 mm**
	2.0 * tension lap	**2430 mm**

Shear reinforcement

It is assumed that at least nominal shear steel will be provided.
Size of tension bars at support dias=40 mm
No.of tension bars at support nbarss=9

SHEAR	**Characteristic strength**	**500 N/mm²**
REINFORCEMENT	**Diameter of bars**	**10 mm**
SUMMARY	**Number of legs**	**2**
	Spacing	**300 mm**
	Approx.weight of links	**10.522 kg/m**
	Ensure that no longitudinal bar is more than 150 mm from vertical leg.	

DEFLECTION	**Permissible span**	**24.159 m**
SUMMARY	**Actual span**	**26.75 m**

Location: Ex1 - Default example

Bending in flanged beams

Calculations are in accordance with EC2: Design of concrete structures and assume the use of a simplified rectangular concrete stress-block and that the depth to the neutral axis is restricted to 0.45*d.

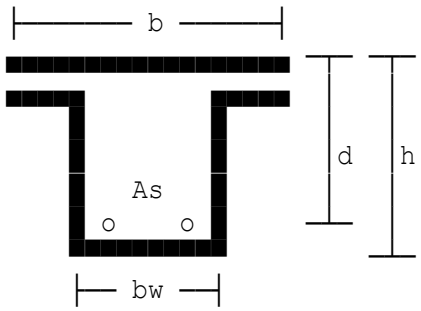

Moment before redistribution	Mbef=600 kNm
Shear force due to ultimate loads	VEd=267 kN
Axial load due to ultimate loads	NEd=0 kN
Length of beam/slab	L=8.2 m
Overall depth of section	h=650 mm
Actual flange width	ba=3350 mm
Flange thickness	hf=200 mm
Breadth of rib	bw=350 mm

Section being analysed is considered as non-continuous.

Char yield strength of r'ment	fyk=500 N/mm²
Max.aggregate size (for bar spc.)	hagg=20 mm
Diameter of tension bars	dia=25 mm
Diameter of link legs	dial=8 mm
BM after redistribution	M=600 kNm

Section being considered is a T-beam.

DESIGN SUMMARY	**Overall depth**	**650 mm**
	Effective depth	**580 mm**
	Flange width	**2590 mm**
	Web width	**350 mm**
FLEXURE	**Parameter K**	**0.023**
	Parameter K'	**0.1684**
	Lever arm ratio z/d	**0.95**
TENSION REINFORCEMENT	**Steel area required**	**2505 mm²**
	Steel area provided	**2945 mm²**
	Diameter of bars	**25 mm**
	Number of bars	**6**
	Steel percentage req.	**0.1667 %**
	Minimum area of steel	**305.8 mm²**
	Maximum area of steel	**67340 mm²**

Shear check

Design shear stress	vEd=VEd*10^3/(0.9*bw*d)=1.461 N/mm²
Concrete strut capacity	vRdm=0.124*fck*(1-fck/250)=3.274 N/mm²
Angle of inclination of strut	theta'=22°
Number of shear legs	nsl=2
Chosen spacing	s=200 mm

SHEAR SUMMARY	**Design shear force**	**267 kN**
	Design shear stress	**1.461 N/mm²**
	Concrete strut capacity	**3.274 N/mm²**
	Area/spacing ratio	**0.4706**
	Diameter of links	**8 mm**
	Area of links	**100 mm²**
	Maximum spacing	**213 mm**
	Actual spacing	**200 mm**

Deflection

Actual span to depth ratio	l'd=L*1000/d=14.14
Allowable span/depth ratio	l'da=k*N*F1*F2*F3=79.14
Absolute value of span/depth	l'da=40*k=40

DESIGN	**Actual l/d ratio**	**14.14**
SUMMARY	**Basic l/d ratio**	**98.54**
DEFLECTION	**Span factor**	**1**
	Flange beam factor F1	**0.8**
	Long spans factor F2	**0.8537**
	Steel stress factor F3	**1.176**
	Allowable l/d ratio	**40**

Location: Ex2 - Hogging moment

Bending in flanged beams

Calculations are in accordance with EC2: Design of concrete structures and assume the use of a simplified rectangular concrete stress-block and that the depth to the neutral axis is restricted to 0.45*d.

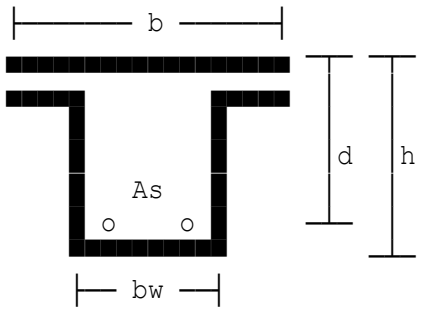

Moment before redistribution	Mbef=600 kNm
Shear force due to ultimate loads	VEd=267 kN
Axial load due to ultimate loads	NEd=0 kN
Length of beam/slab	L=8.2 m
Overall depth of section	h=650 mm
Actual flange width	ba=3350 mm
Flange thickness	hf=200 mm
Breadth of rib	bw=350 mm

Section being analysed is considered as continuous.
Section considered has a hogging moment.

Char yield strength of r'ment	fyk=500 N/mm²
Max.aggregate size (for bar spc.)	hagg=20 mm
Diameter of tension bars	dia=25 mm
Diameter of link legs	dial=8 mm
BM after redistribution	M=600 kNm
Diameter of compression bars	diac=20 mm
Depth to compression steel	d2=55 mm

DESIGN SUMMARY	**Overall depth**	**650 mm**
	Effective depth	**580 mm**
	Width of section	**350 mm**
FLEXURE	**Parameter K**	**0.1699**
	Parameter K'	**0.1684**
	Lever arm ratio z/d	**0.8185**
TENSION REINFORCEMENT	**Steel area provided**	**2945 mm²**
	Diameter of bars	**25 mm**
	Number of bars	**6**
	Steel area required	**2905 mm²**
	Steel percentage req.	**1.431 %**
	Minimum area of steel	**305.8 mm²**
	Maximum area of steel	**9100 mm²**
COMPRESSION REINFORCEMENT	**Steel area provided**	**628.3 mm²**
	Diameter of bars	**20 mm**
	Number of bars	**2**
	Steel area required	**22.68 mm²**
	Minimum area required	**455 mm²**

Shear check

Design shear stress	vEd=VEd*10^3/(0.9*bw*d)=1.461 N/mm²
Concrete strut capacity	vRdm=0.124*fck*(1-fck/250)=3.274 N/mm²
Angle of inclination of strut	theta'=22°
Number of shear legs	nsl=2
Chosen spacing	s=200 mm

SHEAR SUMMARY	**Design shear force**	**267 kN**
	Design shear stress	**1.461 N/mm²**
	Concrete strut capacity	**3.274 N/mm²**
	Area/spacing ratio	**0.4706**
	Diameter of links	**8 mm**
	Area of links	**100 mm²**
	Maximum spacing	**213 mm**
	Actual spacing	**200 mm**

Location: Ex3 - As Ex1 but with cont=1, supp=0 and flange=1

Bending in flanged beams

Calculations are in accordance with EC2: Design of concrete structures and assume the use of a simplified rectangular concrete stress-block and that the depth to the neutral axis is restricted to 0.45*d.

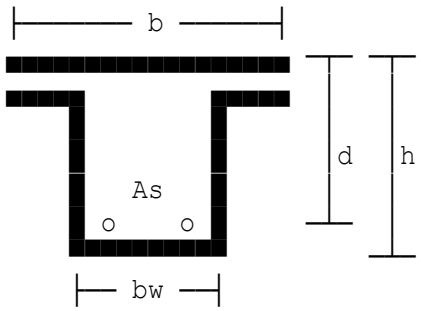

Moment before redistribution	Mbef=600 kNm
Shear force due to ultimate loads	VEd=267 kN
Axial load due to ultimate loads	NEd=0 kN
Length of beam/slab	L=8.2 m
Overall depth of section	h=650 mm
Actual flange width	ba=3350 mm
Flange thickness	hf=200 mm
Breadth of rib	bw=350 mm

Section being analysed is considered as continuous.
Section considered has a sagging moment.

Char yield strength of r'ment	fyk=500 N/mm²
Max.aggregate size (for bar spc.)	hagg=20 mm
Diameter of tension bars	dia=25 mm
Diameter of link legs	dial=8 mm
BM after redistribution	M=600 kNm
Breadth of flange	b=3350 mm

DESIGN SUMMARY	**Overall depth**	**650 mm**
	Effective depth	**580 mm**
	Flange width	**3350 mm**
	Web width	**350 mm**
FLEXURE	**Parameter K**	**0.0177**
	Parameter K'	**0.1684**
	Lever arm ratio z/d	**0.95**
TENSION REINFORCEMENT	**Steel area required**	**2505 mm²**
	Steel area provided	**2945 mm²**
	Diameter of bars	**25 mm**
	Number of bars	**6**
	Steel percentage req.	**0.1289 %**
	Minimum area of steel	**305.8 mm²**
	Maximum area of steel	**87100 mm²**

Shear check

Design shear stress	vEd=VEd*10^3/(0.9*bw*d)=1.461 N/mm²
Concrete strut capacity	vRdm=0.124*fck*(1-fck/250)=3.274 N/mm²
Angle of inclination of strut	theta'=22°
Number of shear legs	nsl=2
Chosen spacing	s=200 mm

SHEAR SUMMARY	**Design shear force**	**267 kN**
	Design shear stress	**1.461 N/mm²**
	Concrete strut capacity	**3.274 N/mm²**
	Area/spacing ratio	**0.4706**
	Diameter of links	**8 mm**
	Area of links	**100 mm²**
	Maximum spacing	**213 mm**
	Actual spacing	**200 mm**

Deflection

Actual span to depth ratio	l'd=L*1000/d=14.14
Allowable span/depth ratio	l'da=k*N*F1*F2*F3=119.3
Absolute value of span/depth	l'da=40*k=40

DESIGN	**Actual l/d ratio**	**14.14**
SUMMARY	**Basic l/d ratio**	**148.6**
DEFLECTION	**Span factor**	**1**
	Flange beam factor F1	**0.8**
	Long spans factor F2	**0.8537**
	Steel stress factor F3	**1.176**
	Allowable l/d ratio	**40**

Location: Ex4 - As Ex1 but with sym=0

Bending in flanged beams

Calculations are in accordance with EC2: Design of concrete structures and assume the use of a simplified rectangular concrete stress-block and that the depth to the neutral axis is restricted to 0.45*d.

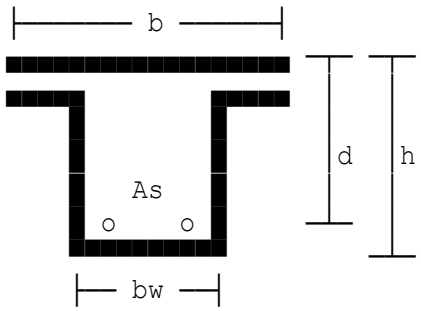

Moment before redistribution	Mbef=600 kNm
Shear force due to ultimate loads	VEd=267 kN
Axial load due to ultimate loads	NEd=0 kN
Length of beam/slab	L=8.2 m
Overall depth of section	h=650 mm
Actual flange width	ba=3350 mm
Flange thickness	hf=200 mm
Breadth of rib	bw=350 mm

Section being analysed is considered as non-continuous.

Char yield strength of r'ment	fyk=500 N/mm²
Max.aggregate size (for bar spc.)	hagg=20 mm
Diameter of tension bars	dia=25 mm
Diameter of link legs	dial=8 mm
BM after redistribution	M=600 kNm

Section being considered is a T-beam.
NOTE: Clear distances vary.

DESIGN	**Overall depth**	**650 mm**
SUMMARY	**Effective depth**	**580 mm**
	Flange width	**2590 mm**
	Web width	**350 mm**
FLEXURE	**Parameter K**	**0.023**
	Parameter K'	**0.1684**
	Lever arm ratio z/d	**0.95**
TENSION REINFORCEMENT	**Steel area required**	**2505 mm²**
	Steel area provided	**2945 mm²**
	Diameter of bars	**25 mm**
	Number of bars	**6**
	Steel percentage req.	**0.1667 %**
	Minimum area of steel	**305.8 mm²**
	Maximum area of steel	**67340 mm²**

Shear check

Design shear stress	vEd=VEd*10^3/(0.9*bw*d)=1.461 N/mm²
Concrete strut capacity	vRdm=0.124*fck*(1-fck/250)=3.274 N/mm²
Angle of inclination of strut	theta'=22°
Number of shear legs	nsl=2
Chosen spacing	s=200 mm

SHEAR SUMMARY	**Design shear force**	**267 kN**
	Design shear stress	**1.461 N/mm²**
	Concrete strut capacity	**3.274 N/mm²**
	Area/spacing ratio	**0.4706**
	Diameter of links	**8 mm**
	Area of links	**100 mm²**
	Maximum spacing	**213 mm**
	Actual spacing	**200 mm**

Deflection

Actual span to depth ratio	l'd=L*1000/d=14.14
Allowable span/depth ratio	l'da=k*N*F1*F2*F3=79.14
Absolute value of span/depth	l'da=40*k=40

DESIGN	**Actual l/d ratio**	**14.14**
SUMMARY	**Basic l/d ratio**	**98.54**
DEFLECTION	**Span factor**	**1**
	Flange beam factor F1	**0.8**
	Long spans factor F2	**0.8537**
	Steel stress factor F3	**1.176**
	Allowable l/d ratio	**40**

Location: East stairwell edge beams

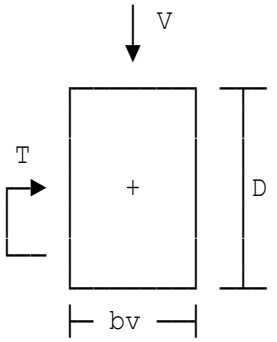

Rectangular section – torsion design

Calculations for torsion reinforcement in accordance with BS8110 : Part 2 (Issue 2) Clause 2.4.4.

Design to BS8110(1997), partial safety factor for steel gammaS=1.15

Torsional moment due to ult.loads	T=15 kNm
Shear force due to ultimate loads	V=125 kN
Overall depth of section	D=350 mm
Breadth of concrete section	bv=300 mm
Char strength of concrete	fcu=30 N/mm²
Diameter of closed link	dlink=10 mm
Diameter of longitudinal reinforcement to be used when designing torsion steel	dlong=20 mm
Nominal concrete cover	cover=50 mm
Char.strength of longitud.bars	fy=500 N/mm²
Characteristic strength of links	fyv=250 N/mm²
Area tens.steel prov.for bending	Asb=942 mm²

TORSION	**Diam.of longitudinal bars**	**20 mm**
REINFORCEMENT	**Number of longitudinal bars**	**4**
SUMMARY	**Diameter of links**	**10 mm**
	Spacing of links	**80 mm**

Location: Edge beams with low torsion & large bars

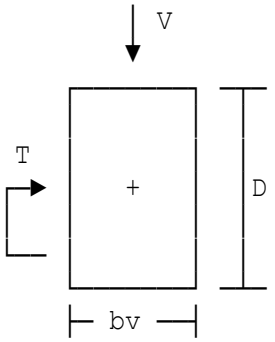

Rectangular section – torsion design

Calculations for torsion reinforcement in accordance with BS8110 : Part 2 (Issue 2) Clause 2.4.4.

Design to BS8110(1997), partial safety factor for steel gammaS=1.15

Torsional moment due to ult.loads	T=5 kNm
Shear force due to ultimate loads	V=125 kN
Overall depth of section	D=350 mm
Breadth of concrete section	bv=300 mm
Char strength of concrete	fcu=30 N/mm²
Diameter of closed link	dlink=10 mm
Diameter of longitudinal reinforcement to be used when designing torsion steel	dlong=32 mm
Nominal concrete cover	cover=50 mm
Char.strength of longitud.bars	fy=500 N/mm²
Characteristic strength of links	fyv=250 N/mm²
Area tens.steel prov.for bending	Asb=942 mm²

TORSION	**Diam.of longitudinal bars**	**32 mm**
REINFORCEMENT	**Number of longitudinal bars**	**4**
SUMMARY	**Diameter of links**	**10 mm**
	Spacing of links	**120 mm**

Location: Edge beams with high torsion and severe exposure

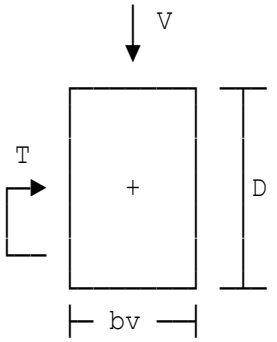

Rectangular section – torsion design

Calculations for torsion reinforcement in accordance with BS8110 : Part 2 (Issue 2) Clause 2.4.4.

Design to BS8110(1997), partial safety factor for steel gammaS=1.15

Torsional moment due to ult.loads	T=20 kNm
Shear force due to ultimate loads	V=125 kN
Overall depth of section	D=350 mm
Breadth of concrete section	bv=350 mm
Char strength of concrete	fcu=30 N/mm²
Diameter of closed link	dlink=10 mm
Diameter of longitudinal reinforcement to be used when designing torsion steel	dlong=16 mm
Nominal concrete cover	cover=50 mm
Char.strength of longitud.bars	fy=500 N/mm²
Characteristic strength of links	fyv=250 N/mm²
Area tens.steel prov.for bending	Asb=942 mm²

TORSION	**Diam.of longitudinal bars**	**16 mm**
REINFORCEMENT	**Number of longitudinal bars**	**4**
SUMMARY	**Diameter of links**	**10 mm**
	Spacing of links	**70 mm**

Location: Ex1 - East stairwell edge beams

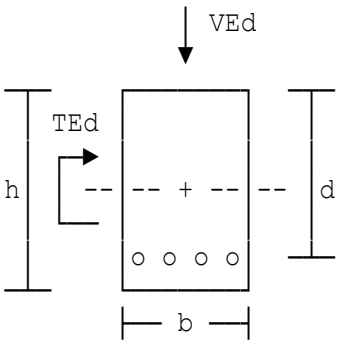

Rectangular section – torsion design to EC2

Calculations for torsion reinforcement in accordance with EC2 Part 1-1: General rules and rules for buildings.

d= effective depth

Design torsion moment	TEd=13 kNm
Design shear force	VEd=125 kN
Overall depth of section	h=350 mm
Breadth of concrete section	b=300 mm
Char.strength of longitud.bars	fyk=500 N/mm²
Partial safety factor for steel	gams=1.15
Diameter of closed link	dial=8 mm
Diameter of long. reinf'ment	dlong=20 mm
Nominal cover (to links)	cover=30 mm

Design for shear using the "Variable Strut Inclination Method"

compute comp=cot(θ)=1/tan(θ)=2.4751

Maximum shear resistance:

VRdmax=0.36*b*d*(1-fck/250)*fck/((comp+1/comp)*1000)=254.89 kN

Asw/s based on area of two legs AswsS=VEd*1000/(0.78*d*fyk*comp)
=0.42879

Convert the rectangular section to an equivalent hollow box section

Effective thickness	tef=h*b/(2*(h+b))=80.769 mm
Limiting thickness	tef=2*(cover+dial+dlong/2)=96 mm
Area within centre line	Ak=(b-tef)*(h-tef)=51816 mm²
Perimeter of centreline	uk=2*(b+h-2*tef)=916 mm

Crushing limit for combined shear and torsion

The following check is in accordance with EN 1992-2 Clause 6.3.2(104).

Effective thickness	tef=96 mm
Area within centre line	Ak'=(b-tef)*(h-tef)=51816 mm²
Max torsional moment resistance	TRdmax=2*v1*fck/1.5*Ak'*tef*comp1 /1E6=31.099 kNm
Interaction condition	ratio=TEd/TRdmax+VEd/VRdmax=0.90842

Therefore concrete section is adequate.

Total amount of link reinforcement (shear and torsion)

The area Asw below is based on the area of two legs of the stirrup.

Asw/s required	Asws=AswsS+AswsT=0.66182
Round link spacing down to	sv=10*INT(sv/10)=110 mm
Asw/s provided	Aswsp=TABLE 4.4 for dial=8, sv=110 =0.9256

Links should be of closed type fully anchored by means of laps or hooked ends, as per EC2 Clause 9.2.3(1) Figure 9.6.

Area of additional longitudinal reinforcement required for torsion

Diameter long.tension reinf'ment ltbars=16 mm
Area of longitudinal bars
provided for torsion Aspro=nbars*(PI*ltbars^2/4)=804.25 mm²
Area of longitudinal bars reqd. 653.8 mm²
This torsional steel is additional to that required for bending and shear. Additional longitudinal reinforcement required at the level of the tension steel may be provided by using larger bars than those required for bending alone.

TORSION REINFORCEMENT SUMMARY	**Diam.of longitudinal bars**	**16 mm**
	Number of longitudinal bars	**4**
	Diameter of links	**8 mm**
	Spacing of shear and torsion links	**110 mm**

Location: Ex2 - Edge beams with low torsion & large bars

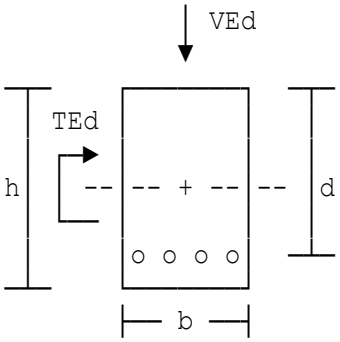

Rectangular section – torsion design to EC2

Calculations for torsion reinforcement in accordance with EC2 Part 1-1: General rules and rules for buildings.

d= effective depth

Design torsion moment	TEd=5 kNm
Design shear force	VEd=125 kN
Overall depth of section	h=350 mm
Breadth of concrete section	b=300 mm
Char.strength of longitud.bars	fyk=500 N/mm²
Partial safety factor for steel	gams=1.15
Diameter of closed link	dial=8 mm
Diameter of long. reinf'ment	dlong=32 mm
Nominal cover (to links)	cover=30 mm

Design for shear using the "Variable Strut Inclination Method"

compute comp=cot(θ)=1/tan(θ)=2.4751
Maximum shear resistance:
VRdmax=0.36*b*d*(1-fck/250)*fck/((comp+1/comp)*1000)=249.83 kN
Asw/s based on area of two legs AswsS=VEd*1000/(0.78*d*fyk*comp)
=0.43749

Convert the rectangular section to an equivalent hollow box section

Effective thickness	tef=h*b/(2*(h+b))=80.769 mm
Limiting thickness	tef=2*(cover+dial+dlong/2)=108 mm
Area within centre line	Ak=(b-tef)*(h-tef)=46464 mm²
Perimeter of centreline	uk=2*(b+h-2*tef)=868 mm

Crushing limit for combined shear and torsion

The following check is in accordance with EN 1992-2 Clause 6.3.2(104).

Effective thickness	tef=108 mm
Area within centre line	Ak'=(b-tef)*(h-tef)=46464 mm²
Max torsional moment resistance	TRdmax=2*v1*fck/1.5*Ak'*tef*comp1 /1E6=31.373 kNm
Interaction condition	ratio=TEd/TRdmax+VEd/VRdmax=0.65972

Therefore concrete section is adequate.

Total amount of link reinforcement (shear and torsion)

The area Asw below is based on the area of two legs of the stirrup.

Asw/s required	Asws=AswsS+AswsT=0.53743
Round link spacing down to	sv=10*INT(sv/10)=100 mm
Asw/s provided	Aswsp=TABLE 4.4 for dial=8, sv=100 =1.006

Links should be of closed type fully anchored by means of laps or hooked ends, as per EC2 Clause 9.2.3(1) Figure 9.6.

Area of additional longitudinal reinforcement required for torsion

Diameter long.tension reinf'ment ltbars=12 mm
Area of longitudinal bars
provided for torsion Aspro=nbars*(PI*ltbars^2/4)=452.39 mm²
Area of longitudinal bars reqd. 265.73 mm²
This torsional steel is additional to that required for bending and shear. Additional longitudinal reinforcement required at the level of the tension steel may be provided by using larger bars than those required for bending alone.

TORSION REINFORCEMENT SUMMARY	**Diam.of longitudinal bars**	**12 mm**
	Number of longitudinal bars	**4**
	Diameter of links	**8 mm**
	Spacing of shear and torsion links	**100 mm**

Location: Ex3 - Edge beams with high torsion and severe exposure

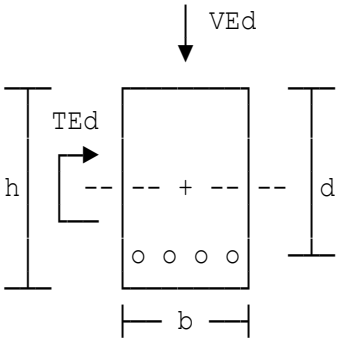

Rectangular section – torsion design to EC2

Calculations for torsion reinforcement in accordance with EC2 Part 1-1: General rules and rules for buildings.

d= effective depth

Design torsion moment	TEd=20 kNm
Design shear force	VEd=125 kN
Overall depth of section	h=350 mm
Breadth of concrete section	b=350 mm
Char.strength of longitud.bars	fyk=500 N/mm²
Partial safety factor for steel	gams=1.15
Diameter of closed link	dial=8 mm
Diameter of long. reinf'ment	dlong=16 mm
Nominal cover (to links)	cover=30 mm

Design for shear using the "Variable Strut Inclination Method"

compute comp=cot(θ)=1/tan(θ)=2.4751
Maximum shear resistance:
VRdmax=0.36*b*d*(1-fck/250)*fck/((comp+1/comp)*1000)=299.34 kN
Asw/s based on area of two legs AswsS=VEd*1000/(0.78*d*fyk*comp)
=0.42597

Convert the rectangular section to an equivalent hollow box section

Effective thickness	tef=h*b/(2*(h+b))=87.5 mm
Limiting thickness	tef=2*(cover+dial+dlong/2)=92 mm
Area within centre line	Ak=(b-tef)*(h-tef)=66564 mm²
Perimeter of centreline	uk=2*(b+h-2*tef)=1032 mm

Crushing limit for combined shear and torsion

The following check is in accordance with EN 1992-2 Clause 6.3.2(104).

Effective thickness	tef=92 mm
Area within centre line	Ak'=(b-tef)*(h-tef)=66564 mm²
Max torsional moment resistance	TRdmax=2*v1*fck/1.5*Ak'*tef*comp1 /1E6=38.286 kNm
Interaction condition	ratio=TEd/TRdmax+VEd/VRdmax=0.93997

Therefore concrete section is adequate.

Total amount of link reinforcement (shear and torsion)

The area Asw below is based on the area of two legs of the stirrup.

Asw/s required	Asws=AswsS+AswsT=0.70504
Round link spacing down to	sv=10*INT(sv/10)=120 mm
Asw/s provided	Aswsp=TABLE 4.4 for dial=8, sv=120 =0.8452

Links should be of closed type fully anchored by means of laps or hooked ends, as per EC2 Clause 9.2.3(1) Figure 9.6.

Area of additional longitudinal reinforcement required for torsion

Diameter long.tension reinf'ment ltbars=16 mm
Area of longitudinal bars
provided for torsion Aspro=nbars*(PI*ltbars^2/4)=1206.4 mm²
Area of longitudinal bars reqd. 882.15 mm²
This torsional steel is additional to that required for bending and shear. Additional longitudinal reinforcement required at the level of the tension steel may be provided by using larger bars than those required for bending alone.

TORSION REINFORCEMENT SUMMARY	**Diam.of longitudinal bars**	**16 mm**
	Number of longitudinal bars	**6**
	Diameter of links	**8 mm**
	Spacing of shear and torsion links	**120 mm**

Location: Ex4 - Reinforced Concrete Design to EC2 by B Mosley Ex 7.9

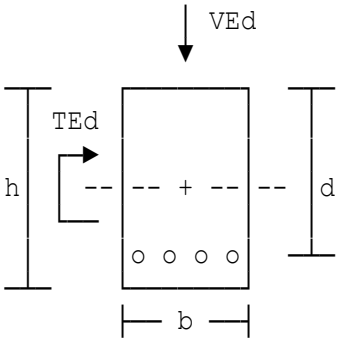

Rectangular section – torsion design to EC2

Calculations for torsion reinforcement in accordance with EC2 Part 1-1: General rules and rules for buildings.

d= effective depth

Design torsion moment	TEd=24 kNm
Design shear force	VEd=308 kN
Overall depth of section	h=600 mm
Breadth of concrete section	b=300 mm
Char.strength of longitud.bars	fyk=500 N/mm²
Partial safety factor for steel	gams=1.15
Diameter of closed link	dial=8 mm
Diameter of long. reinf'ment	dlong=32 mm
Nominal cover (to links)	cover=35 mm

Design for shear using the "Variable Strut Inclination Method"

compute comp=cot(θ)=1/tan(θ)=2.4751
Maximum shear resistance:
VRdmax=0.36*b*d*(1-fck/250)*fck/((comp+1/comp)*1000)=535.75 kN
Asw/s based on area of two legs AswsS=VEd*1000/(0.78*d*fyk*comp)
=0.58979

Convert the rectangular section to an equivalent hollow box section

Effective thickness	tef=h*b/(2*(h+b))=100 mm
Limiting thickness	tef=2*(cover+dial+dlong/2)=118 mm
Area within centre line	Ak=(b-tef)*(h-tef)=87724 mm²
Perimeter of centreline	uk=2*(b+h-2*tef)=1328 mm

Crushing limit for combined shear and torsion

The following check is in accordance with EN 1992-2 Clause 6.3.2(104).

Effective thickness	tef=118 mm
Area within centre line	Ak'=(b-tef)*(h-tef)=87724 mm²
Max torsional moment resistance	TRdmax=2*v1*fck/1.5*Ak'*tef*comp1 /1E6=75.934 kNm
Interaction condition	ratio=TEd/TRdmax+VEd/VRdmax=0.89095

Therefore concrete section is adequate.

Total amount of link reinforcement (shear and torsion)

The area Asw below is based on the area of two legs of the stirrup.

Asw/s required	Asws=AswsS+AswsT=0.8439
Round link spacing down to	sv=10*INT(sv/10)=120 mm
Asw/s provided	Aswsp=TABLE 4.4 for dial=8, sv=120 =0.8452

Links should be of closed type fully anchored by means of laps or hooked ends, as per EC2 Clause 9.2.3(1) Figure 9.6.

Area of additional longitudinal reinforcement required for torsion

Diameter long.tension reinf'ment ltbars=16 mm
Area of longitudinal bars
provided for torsion Aspro=nbars*(PI*ltbars^2/4)=1206.4 mm²
Area of longitudinal bars reqd. 1033.6 mm²
This torsional steel is additional to that required for bending and shear. Additional longitudinal reinforcement required at the level of the tension steel may be provided by using larger bars than those required for bending alone.

TORSION REINFORCEMENT SUMMARY	**Diam.of longitudinal bars**	**16 mm**
	Number of longitudinal bars	**6**
	Diameter of links	**8 mm**
	Spacing of shear and torsion links	**120 mm**

Location: Ex1 - Factory at Erewhon

Design of ground-supported concrete slabs (pallet loading)

The stress calculations below use formulae 1-3 from the Cement and Concrete Association Technical Report 550:1982 (TR550) entitled 'Design of floors on ground' by J.W.E. Chandler.

CBR of subgrade	CBR=10 %
Type of sub-base	Granular material
Sub-base thickness	sbb=150 mm
Loading category (1-5)	Lcat=2
Specified concrete grade	fcu=40 N/mm²
28-day modulus of rupture	mrupt=4.77 MN/m²
90-day modulus of rupture	Amrupt=mrupt*1.1*1000 =5247 kN/m² (allowable)
90-day modulus of rupture	Amrupt=1.2*Amrupt=6296.4 kN/m²
Static modulus of elasticity	E=31 kN/mm²
Leg load	Lload=4 tonnes
Depth of rack	d=900 mm
Leg spacing centre to centre	Lcc=2700 mm
Dist.from edge to first rack leg	Defr=150 mm
Dist.between double rack legs	Dbr=300 mm
Aisle width	A=1500 mm
Length of baseplate (in X-dir.)	L=100 mm
Breadth of baseplate (in Y-dir.)	b=100 mm

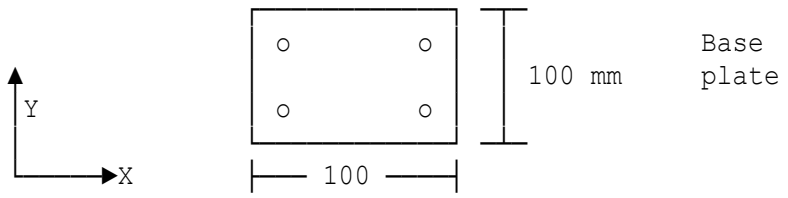

Capacity of forklift truck	fcap=2.5 tonnes
Number of wheels per axle	naxle=2
Thousands of load repetitions	nrpt=120
Radius of equivalent circ. area	Rw=100 mm
Wheel spacing centre-to-centre	Wcc=1500 mm

STRESS CALCULATIONS

Rack positioned at edge of slab - Arrangement 1

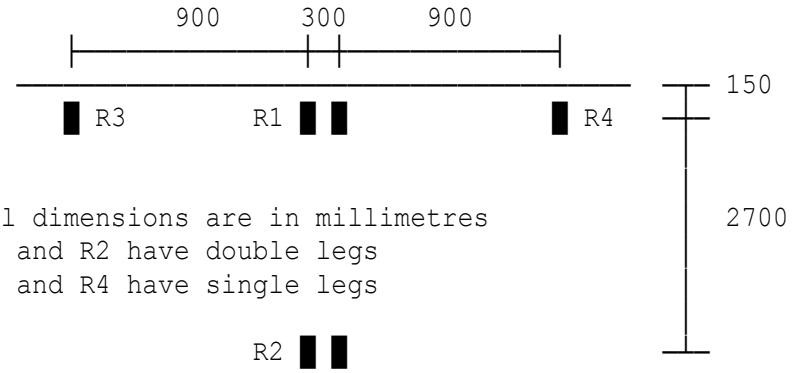

All dimensions are in millimetres
R1 and R2 have double legs
R3 and R4 have single legs

Leg stresses from racks:
1. Edge stress beneath double-leg loaded point R1:
2. Internal stress beneath double-leg loaded point R2:
3. Edge stress beneath single-leg loaded point R3:
4. Edge stress beneath single-leg loaded point R4:
Total stress at R1 Tqe1=(qe1+qi21+qe31+qe41)*0.85
=4763.9 kN/m²
where 0.85 is the load-transfer factor at the edge.

Rack positioned at edge of slab - Arrangement 2

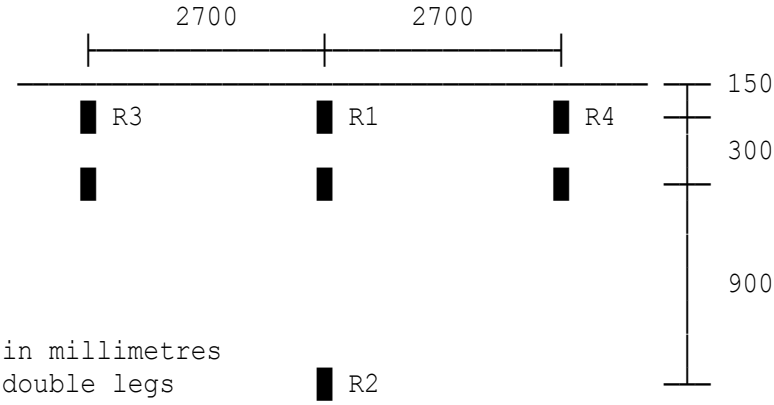

All dimensions are in millimetres
R1, R3 and R4 have double legs
R2 has single leg

Leg stresses from racks:
1. Edge stress beneath double-leg loaded point R1:
2. Internal stress beneath single-leg loaded point R2:
3. Edge stress beneath double-leg loaded point R3:
4. Edge stress beneath double-leg loaded point R4:
Total stress at R1 Tqe2=(qe1+qi21+qe31+qe41)*0.85
=5769.3 kN/m²
where 0.85 is the load-transfer factor at the edge.

Rack positioned at corner of slab - Arrangement 1

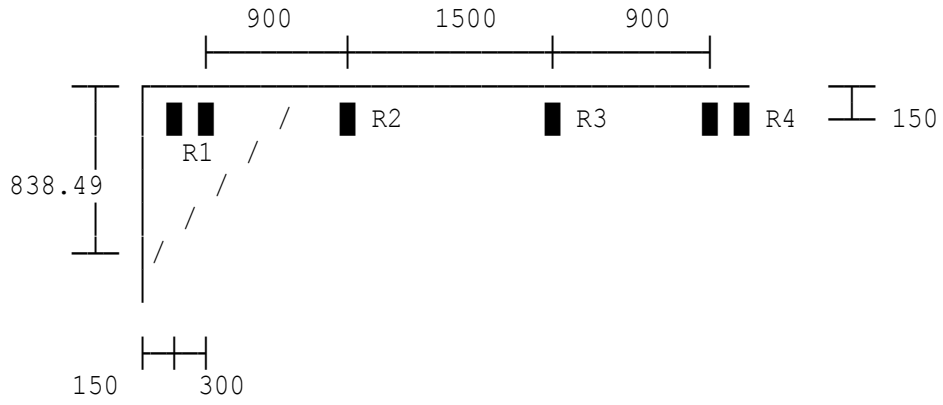

All dimensions are in millimetres
R1 and R4 have double legs
R2 and R3 have single legs
Critical position is at a radius of 838.49 mm from corner

Leg stresses from racks:
1. Corner stress beneath double-leg loaded point R1:
2. Edge stress beneath single-leg loaded point R2:
3. Edge stress beneath single-leg loaded point R3:
4. Edge stress beneath double-leg loaded point R4:
where 0.7 is the factor for load transfer at the corner.

Rack positioned at corner of slab - Arrangement 2

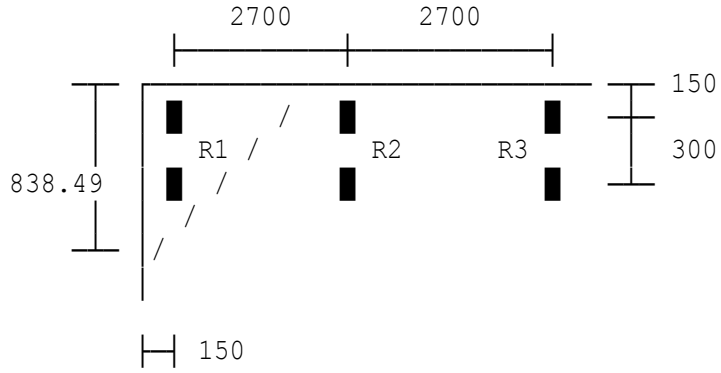

All dimensions are in millimetres
R1, R2 and R4 have double legs
Critical position is at a radius of 838.49 mm from corner

Leg stresses from racks:
1. Corner stress beneath double-leg loaded point R1:
2. Edge stress beneath double-leg loaded point R2:
3. Edge stress beneath double-leg loaded point R3:
where 0.7 is the factor for load transfer at the corner.

Rack positioned internally

Leg stresses from racks:
1. Internal stress beneath double-leg loaded point R1:
2. Internal stress beneath single-leg loaded point R2:
3. Internal stress beneath single-leg loaded point R3:
4. Internal stress beneath double-leg loaded point R4:
5. Internal stress beneath double-leg loaded point R5:

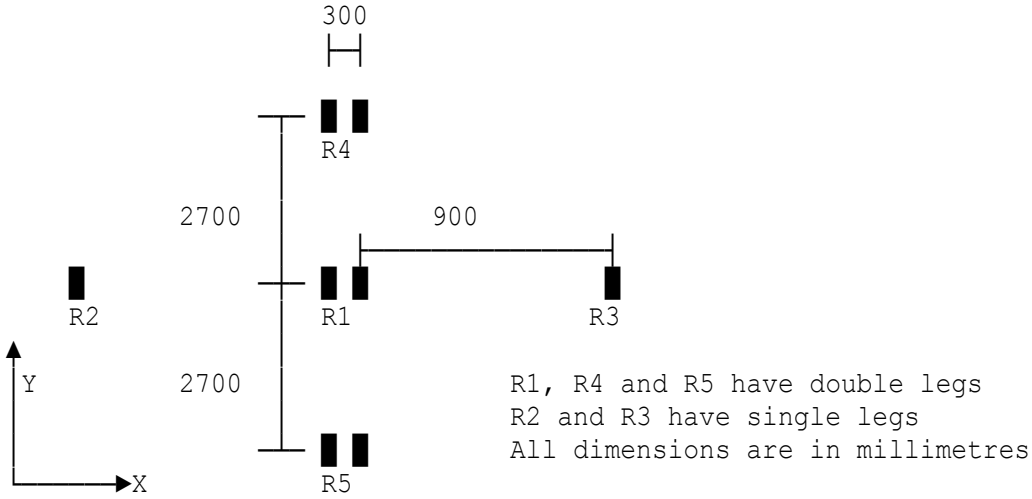

Orientated about X-X axis:

Stress at R1 due to R2	qi21x=qi2*P21x/100=-169.82 kN/m²
Stress at R1 due to R3	qi31x=qi3*P31x/100=-169.82 kN/m²
Stress at R1 due to R4	qi41x=qi4*P41x/100=0 kN/m²
Stress at R1 due to R5	qi51x=qi5*P51x/100=0 kN/m²

Orientated about Y-Y axis:

Stress at R1 due to R2	qi21y=qi2*P21y/100=189.59 kN/m²
Stress at R1 due to R3	qi31y=qi3*P31y/100=189.59 kN/m²
Stress at R1 due to R4	qi41y=qi4*P41y/100=-140.99 kN/m²
Stress at R1 due to R5	qi51y=qi5*P51y/100=-140.99 kN/m²

WHEEL LOADING

Wheel stresses from forklift or other trucks:
1. Edge stress due to wheel load:
2. Corner stress due to wheel load:
3. Internal stress due to rack leg beneath double-leg point R1:

Wheel stress at the edge

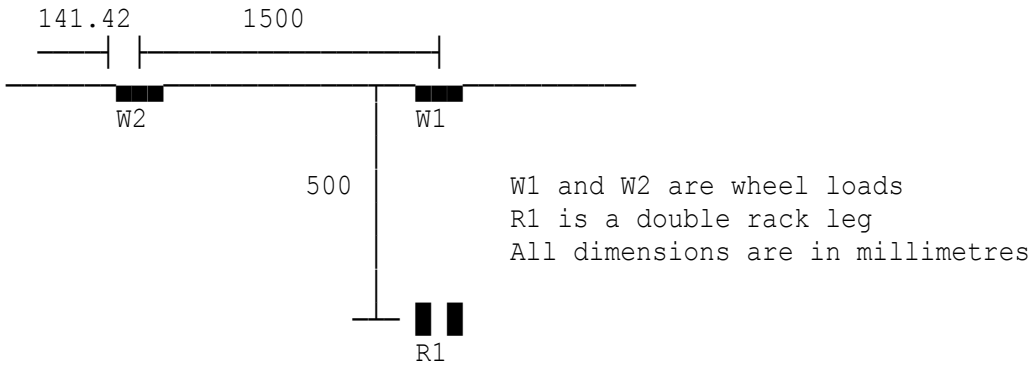

W1 and W2 are wheel loads
R1 is a double rack leg
All dimensions are in millimetres

Total stress at W1 Tqwe=(qew+qw2w1+q1w1)*0.85
=3923.7 kN/m²

where 0.85 is the load-transfer factor at the edge.

Wheel stress at the corner

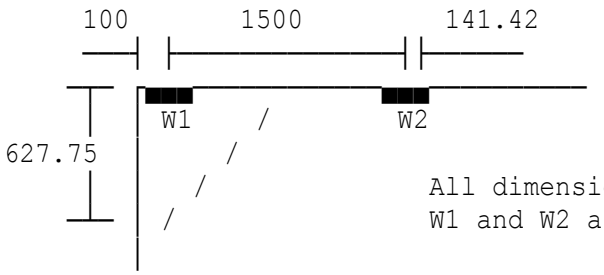

All dimensions are in millimetres
W1 and W2 are wheel loads

where 0.7 is the load-transfer factor at the edge.

SUMMARY OF RESULTS

Concrete grade specified	**fcu=40 N/mm²**
Allowable 90-day modulus of rupture	**Amrupt=6296.4 kN/m²**
Thus the calculated stresses are as follows:	
Edge stress in slab due to rack 1	**REstress1=4763.9 kN/m²**
Edge stress in slab due to rack 2	**REstress2=5769.3 kN/m²**
Corner stress in slab due to rack 1	**RCstress1=5922.3 kN/m²**
Corner stress in slab due to rack 2	**RCstress2=5899.8 kN/m²**
Internal stress in slab due to rack	**RIstressx=4906.7 kN/m²**
Internal stress in slab due to rack	**RIstressy=5343.6 kN/m²**
Edge stress in slab due to wheel	**WEstress =3923.7 kN/m²**
Corner stress in slab due to wheel	**WCstress =2795.4 kN/m²**
Minimum suitable slab thickness	**h=175 mm**

```
 ___ ____________________________________
|
|
|h                                      ← concrete slab
|
|___ ====================================
     /\/\/\/\/\/\/\/\/\/\/\/\/\/\/\/\/\/\  ← sub-base
     ____________________________________
     ////////////////////////////////////  ← subgrade
```

Location: Ex2 - High leg load

Design of ground-supported concrete slabs (pallet loading)

The stress calculations below use formulae 1-3 from the Cement and Concrete Association Technical Report 550:1982 (TR550) entitled 'Design of floors on ground' by J.W.E. Chandler.

CBR of subgrade	CBR=10 %
Type of sub-base	Granular material
Sub-base thickness	sbb=150 mm
Loading category (1-5)	Lcat=2
Specified concrete grade	fcu=40 N/mm²
28-day modulus of rupture	mrupt=4.77 MN/m²
90-day modulus of rupture	Amrupt=mrupt*1.1*1000 =5247 kN/m² (allowable)
90-day modulus of rupture	Amrupt=1.2*Amrupt=6296.4 kN/m²
Static modulus of elasticity	E=31 kN/mm²
Leg load	Lload=30 tonnes
Depth of rack	d=900 mm
Leg spacing centre to centre	Lcc=2700 mm
Dist.from edge to first rack leg	Defr=150 mm
Dist.between double rack legs	Dbr=300 mm
Aisle width	A=1500 mm
Length of baseplate (in X-dir.)	L=100 mm
Breadth of baseplate (in Y-dir.)	b=100 mm

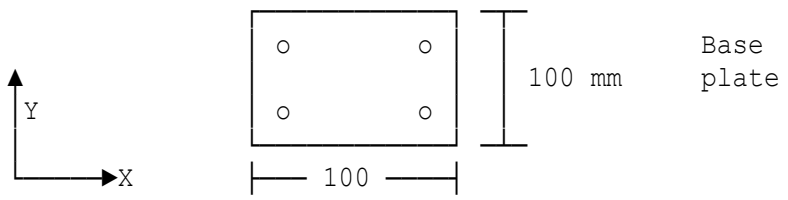

Capacity of forklift truck	fcap=2.5 tonnes
Number of wheels per axle	naxle=2
Thousands of load repetitions	nrpt=120
Radius of equivalent circ. area	Rw=100 mm
Wheel spacing centre-to-centre	Wcc=1500 mm

WARNING:
The load is too high for an unreinforced slab. Instead, design as a reinforced raft slab. This is beyond the scope of this proforma.

Location: Ex1 - Ground-supported steel fibre-reinforced slab

Design of ground-supported concrete slabs to TR34 (4th edition)

This proforma is for the design of ground-supported concrete floors for industrial buildings. The design method employed here is as per TR34 (4th edition) entitled 'Concrete Industrial Ground Floors' by The Concrete Society (March 2016 publication).

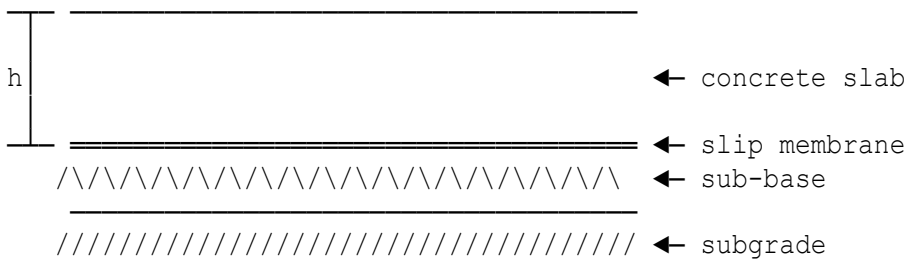

Assume a slab thickness h=175 mm
Type of sub-base Granular material
Type of sub-base to be well graded granular material such as Type 1 or Type 2 complying with and laid in accordance with the Highway Agency Specification for Highway Works. All fill material should be checked for content of potentially expansive materials or reactions with lime and/or cement.
Sub-base thickness sbb=150 mm
Modulus of subgrade reaction k=0.05 N/mm³

Back-to-back pallet racking

Length of baseplate (in X-dir.) Lr=100 mm
Breadth of baseplate (in Y-dir.) br=100 mm
Radius of relative stiffness:
l=(Ecm*h^3/(12*(1-u^2)*k))^0.25=746.33 mm
Dist.from edge to first rack leg Defr=0 mm
Dist.between double rack legs Dbr=250 mm
Reduced design load Dldr=0.8*Dld=115.2 kN

CASE 4: Check for punching shear
Punching shear may be critical for the edge loading condition and will be considered. The shear stress will be checked at the face of the loaded area and on a perimeter at a distance 2d from the loaded area.

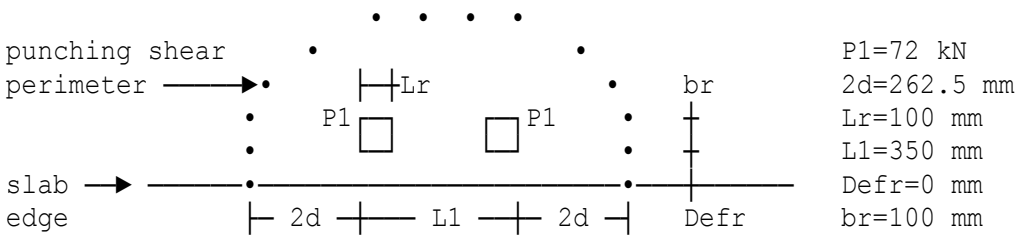

PLAN SHOWING PUNCHING SHEAR PERIMETER

(1) At the face of the loaded area

Shear stress vEd=Dld*1000/(uo*d)=1.9948
Shear strength vRd=0.5*k2*fcd=5.5808 N/mm²
As vRd ≥ vEd (5.5808 N/mm² ≥ 1.9948 N/mm²), shear stress is OK.

(2) At the critical perimeter
Shear capacity for fibre-reinforced concrete:
The expression below is based on RILEM guidance which states that the presence of steel fibres will increase the design shear capacity over that of the plain concrete (an equivalent flexural strength ratio of Re3=0.5 will be assumed).
vRd=(0.035*k1^1.5*fck^0.5+0.12*Re3*fctk/2)=0.68848 N/mm²
Slab load capacity Pp=vRd*u1*d/1000=124.22 kN
Reduced design load Dldr=0.8*Dld=115.2 kN
As Dldr ≤ Pp (115.2 kN ≤ 124.22 kN), this loading case is OK.

General storage loading - random loading in kN/m²

Uniformly distributed load udl=30 kN/m² (unfactored)
Maximum UDL permitted w=5.95*lam^2*Mn=79.436 kN/m²
As udl ≤ w (30 kN/m² ≤ 79.436 kN/m²), this loading case is OK.

Internal wall loading - line load in kN/m

Line load from wall (unfactored) ll=30 kN/m

For line loads remote from joints or slab edges:
Maximum line load permitted Plin=4*lam*Mn=55.793 kN/m
As ll ≤ Plin (30 kN/m ≤ 55.793 kN/m), this loading case is OK.

For line loads adjacent to a free edge:
Maximum line load permitted Plin=3*lam*Mn=41.845 kN/m
As ll ≤ Plin (30 kN/m ≤ 41.845 kN/m), this loading case is OK.

Mezzanine floor

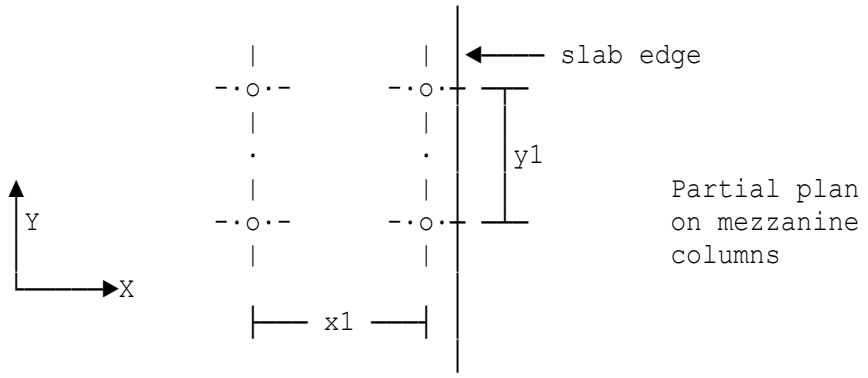

Distance between columns x1=5 m
Distance between columns y1=4 m
Design column load (internal) Wci=(x1*y1)*wt=183.75 kN
Design column load (free edge) Wce=(x1*y1)/2*wt=91.875 kN
Length of baseplate (in X-dir.) Lm=250 mm
Breadth of baseplate (in Y-dir.) bm=250 mm

CASE 1: Internal loading

Load capacity (rat=a1/l) Pui=Pui1+(Pui2-Pui1)*rat/0.2=284.57 kN
As Wci ≤ Pui (183.75 kN/m ≤ 284.57 kN/m), this loading case is OK.

CASE 2: Free edge loading
Load capacity (TR34 Eq. 23) Pue1=(PI*(Mn+Mp)/2)+2*Mn=63.481 kN
Load capacity (TR34 Eq. 24) Pue2=(PI*(Mn+Mp)+4*Mn)/(1-2*a1/(3*l))=145.26 kN
Load capacity (rat=a1/l) Pue=Pue1+(Pue2-Pue1)*rat/0.2=140.76 kN
As Wce ≤ Pue (91.875 kN/m ≤ 140.76 kN/m), this loading case is OK.

Forklift truck loading

Maximum wheel load (unfactored) wl=40 kN
Design load per wheel Dlw=gamD*wl=64 kN

CASE 1: Internal loading
Load capacity (rat2=a2/l) Pu=Pu1+(Pu2-Pu1)*rat2/0.2=181.28 kN
As Dlw ≤ Pu (64 kN ≤ 181.28 kN), internal loading case is OK.

CASE 2: Loading at joints
Load capacity (a2/l=0) Pu1=(PI*(Mp+Mn)/2)+2*Mn=63.481 kN
Load capacity (a2/l≥0.2) Pu2=(PI*(Mp+Mn)+4*Mn)/(1-2*a2/(3*l))=132.38 kN
Load capacity (rat2=a2/l) Pu=Pu1+(Pu2-Pu1)*rat2/0.2=84.638 kN
As Dlw ≤ Pu (64 kN ≤ 84.638 kN), this loading case is OK.

CASE 3: Corner loading
It is assumed that the corner loading is not relevant provided adequate load transfer is provided and the edge condition has been considered.

Relative position of truck wheel and racking leg

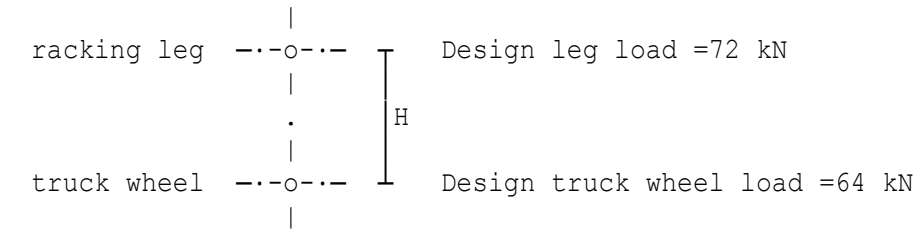

EQUIVALENT LOADED AREAS FOR RACKING
LEGS AND FORK LIFT TRUCK WHEELS

Distance from wheel to baseplate H=300 mm

CASE 1: Internal loading
Load capacity (Rat=aeq/l) Pu=Pu1+(Pu2-Pu1)*Rat/0.2=244.5 kN
As Dld ≤ Pu (144 kN ≤ 244.5 kN), internal loading case is OK.

CASE 2: Free edge loading (at a joint)
Load capacity (a/l=0) Pu1=(PI*(Mp+Mn)/2)+2*Mn=63.481 kN
Load capacity (a/l≥0.2) Pu2=(PI*(Mp+Mn)+4*Mn)/(1-2*a/(3*l))=133.04 kN
Load capacity (Rat=aeq/l) Pu=Pu1+(Pu2-Pu1)*Rat/0.2=115.33 kN

Reduced design load Dldr=0.8*Dld=115.2 kN
As Dldr ≤ Pu (115.2 kN ≤ 115.33 kN), this loading case is OK.

Deflection check - Serviceability Limit State (SLS)

The deflection expression below is by 'Westergaard' and can be used to obtain an approximate quantification of the slab deflection under a concentrated load P.
Deflection (edge condition) DEL=c1*P*1000/(k*l^2)=1.9044 mm

SUMMARY OF RESULTS

Ground-supported slab	**Steel-fibre-reinforced**
Minimum suitable slab thickness	**175 mm**
Char cylinder compressive strength	**32 N/mm²**
Char cube compressive strength	**40 N/mm²**
Modulus of subgrade reaction	**0.05 N/mm³**
Type of sub-base	**Granular material**
Sub-base thickness	**150 mm**
Distance between double rack legs	**250 mm**
Racking leg baseplate	**100 mm x 100 mm**
Mezzanine column base plates	**250 mm x 250 mm**
Unfactored racking single leg load	**60 kN**
Unfactored UDL storage loading	**30 kN/m²**
Unfactored internal line loading	**30 kN/m**
Unfactored mezz. slab permanent load	**1.25 kN/m²**
Unfactored mezz. slab variable load	**5 kN/m²**
Unfactored wheel load	**40 kN**

The design calculations assume 20% load-transfer across the joint. Ensure this can be accommodated by checking with the designer of the load transfer system.

Location: Ex2 - As Ex1 (assumes plain concrete for punching shear)

Design of ground-supported concrete slabs to TR34 (4th edition)

This proforma is for the design of ground-supported concrete floors for industrial buildings. The design method employed here is as per TR34 (4th edition) entitled 'Concrete Industrial Ground Floors' by The Concrete Society (March 2016 publication).

```
 ___ ____________________________________
|
|
|h                                        ← concrete slab
|
|___ ========================================= ← slip membrane
   /\/\/\/\/\/\/\/\/\/\/\/\/\/\/\/\/\/\/\/\/\  ← sub-base
    ________________________________________
   ////////////////////////////////////////// ← subgrade
```

Assume a slab thickness h=175 mm
Type of sub-base Granular material
Type of sub-base to be well graded granular material such as Type 1 or Type 2 complying with and laid in accordance with the Highway Agency Specification for Highway Works. All fill material should be checked for content of potentially expansive materials or reactions with lime and/or cement.
Sub-base thickness sbb=150 mm
Modulus of subgrade reaction k=0.05 N/mm³

Back-to-back pallet racking

Length of baseplate (in X-dir.) Lr=150 mm
Breadth of baseplate (in Y-dir.) br=150 mm
Radius of relative stiffness:
l=(Ecm*h^3/(12*(1-u^2)*k))^0.25=746.33 mm
Dist.from edge to first rack leg Defr=0 mm
Dist.between double rack legs Dbr=300 mm
Reduced design load Dldr=0.8*Dld=115.2 kN

CASE 4: Check for punching shear
Punching shear may be critical for the edge loading condition and will be considered. The shear stress will be checked at the face of the loaded area and on a perimeter at a distance 2d from the loaded area.

```
                          • • • •
 punching shear     •                 •                P1=72 kN
 perimeter ──────►•     ├┼Lr          •    br          2d=262.5 mm
                  •    P1 □      □ P1   •   ┼          Lr=150 mm
                  •                     •   ┼          L1=450 mm
 slab ──►  ──────•──────────────────────•───┼──────    Defr=0 mm
 edge            ├ 2d ┼── L1 ──┼ 2d ┤   Defr          br=150 mm
```

PLAN SHOWING PUNCHING SHEAR PERIMETER

(1) At the face of the loaded area

Shear stress vEd=Dld*1000/(uo*d)=1.4629
Shear strength vRd=0.5*k2*fcd=5.5808 N/mm²
As vRd ≥ vEd (5.5808 N/mm² ≥ 1.4629 N/mm²), shear stress is OK.

(2) At the critical perimeter
Shear capacity for fibre-reinforced concrete:
The expression below ignores the steel fibres in the concrete and assumes plain concrete (EC2 Part 1-1, expression 6.3N).
vRd=0.035*k1^1.5*fck^0.5=0.56 N/mm²
Slab load capacity Pp=vRd*u1*d/1000=115.74 kN
Reduced design load Dldr=0.8*Dld=115.2 kN
As Dldr ≤ Pp (115.2 kN ≤ 115.74 kN), this loading case is OK.

General storage loading - random loading in kN/m²

Uniformly distributed load udl=30 kN/m² (unfactored)
Maximum UDL permitted w=5.95*lam^2*Mn=79.436 kN/m²
As udl ≤ w (30 kN/m² ≤ 79.436 kN/m²), this loading case is OK.

Internal wall loading - line load in kN/m

Line load from wall (unfactored) ll=30 kN/m

For line loads remote from joints or slab edges:
Maximum line load permitted Plin=4*lam*Mn=55.793 kN/m
As ll ≤ Plin (30 kN/m ≤ 55.793 kN/m), this loading case is OK.

For line loads adjacent to a free edge:
Maximum line load permitted Plin=3*lam*Mn=41.845 kN/m
As ll ≤ Plin (30 kN/m ≤ 41.845 kN/m), this loading case is OK.

Mezzanine floor

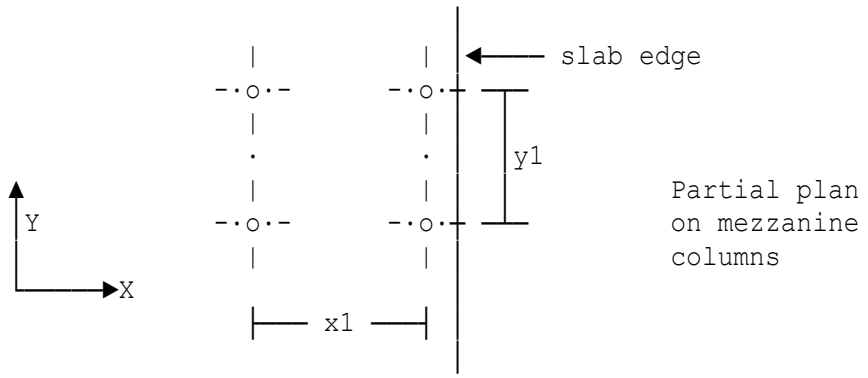

Distance between columns x1=5 m
Distance between columns y1=4 m
Design column load (internal) Wci=(x1*y1)*wt=183.75 kN
Design column load (free edge) Wce=(x1*y1)/2*wt=91.875 kN
Length of baseplate (in X-dir.) Lm=250 mm
Breadth of baseplate (in Y-dir.) bm=250 mm

CASE 1: Internal loading
Load capacity (rat=a1/l) Pui=Pui1+(Pui2-Pui1)*rat/0.2=284.57 kN
As Wci ≤ Pui (183.75 kN/m ≤ 284.57 kN/m), this loading case is OK.

CASE 2: Free edge loading
Load capacity (TR34 Eq. 23) Pue1=(PI*(Mn+Mp)/2)+2*Mn=63.481 kN
Load capacity (TR34 Eq. 24) Pue2=(PI*(Mn+Mp)+4*Mn)/(1-2*a1/(3*l))=145.26 kN
Load capacity (rat=a1/l) Pue=Pue1+(Pue2-Pue1)*rat/0.2=140.76 kN
As Wce ≤ Pue (91.875 kN/m ≤ 140.76 kN/m), this loading case is OK.

Forklift truck loading

Maximum wheel load (unfactored) wl=40 kN
Design load per wheel Dlw=gamD*wl=64 kN

CASE 1: Internal loading
Load capacity (rat2=a2/l) Pu=Pu1+(Pu2-Pu1)*rat2/0.2=181.28 kN
As Dlw ≤ Pu (64 kN ≤ 181.28 kN), internal loading case is OK.

CASE 2: Loading at joints
Load capacity (a2/l=0) Pu1=(PI*(Mp+Mn)/2)+2*Mn=63.481 kN
Load capacity (a2/l≥0.2) Pu2=(PI*(Mp+Mn)+4*Mn)/(1-2*a2/(3*l))=132.38 kN
Load capacity (rat2=a2/l) Pu=Pu1+(Pu2-Pu1)*rat2/0.2=84.638 kN
As Dlw ≤ Pu (64 kN ≤ 84.638 kN), this loading case is OK.

CASE 3: Corner loading
It is assumed that the corner loading is not relevant provided adequate load transfer is provided and the edge condition has been considered.

Relative position of truck wheel and racking leg

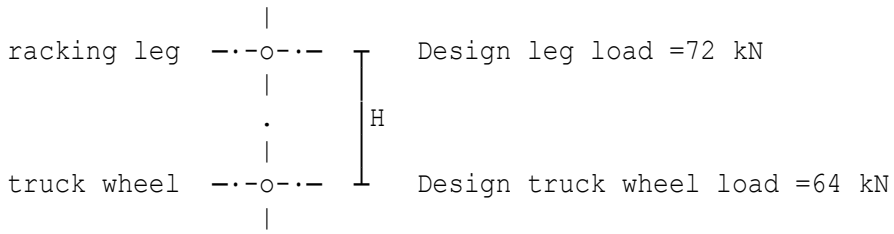

EQUIVALENT LOADED AREAS FOR RACKING
LEGS AND FORK LIFT TRUCK WHEELS

Distance from wheel to baseplate H=300 mm

CASE 1: Internal loading
Load capacity (Rat=aeq/l) Pu=Pu1+(Pu2-Pu1)*Rat/0.2=263.43 kN
As Dld ≤ Pu (144 kN ≤ 263.43 kN), internal loading case is OK.

CASE 2: Free edge loading (at a joint)
Load capacity (a/l=0) Pu1=(PI*(Mp+Mn)/2)+2*Mn=63.481 kN
Load capacity (a/l≥0.2) Pu2=(PI*(Mp+Mn)+4*Mn)/(1-2*a/(3*l))=134.82 kN
Load capacity (Rat=aeq/l) Pu=Pu1+(Pu2-Pu1)*Rat/0.2=125.27 kN
Reduced design load Dldr=0.8*Dld=115.2 kN
As Dldr ≤ Pu (115.2 kN ≤ 125.27 kN), this loading case is OK.

Deflection check - Serviceability Limit State (SLS)

The deflection expression below is by 'Westergaard' and can be used to obtain an approximate quantification of the slab deflection under a concentrated load P.
Deflection (edge condition) DEL=c1*P*1000/(k*l^2)=1.9044 mm

SUMMARY OF RESULTS

Ground-supported slab	**Steel-fibre-reinforced**
Minimum suitable slab thickness	**175 mm**
Char cylinder compressive strength	**32 N/mm²**
Char cube compressive strength	**40 N/mm²**
Modulus of subgrade reaction	**0.05 N/mm³**
Type of sub-base	**Granular material**
Sub-base thickness	**150 mm**
Distance between double rack legs	**300 mm**
Racking leg baseplate	**150 mm x 150 mm**
Mezzanine column base plates	**250 mm x 250 mm**
Unfactored racking single leg load	**60 kN**
Unfactored UDL storage loading	**30 kN/m²**
Unfactored internal line loading	**30 kN/m**
Unfactored mezz. slab permanent load	**1.25 kN/m²**
Unfactored mezz. slab variable load	**5 kN/m²**
Unfactored wheel load	**40 kN**

The design calculations assume 20% load-transfer across the joint. Ensure this can be accommodated by checking with the designer of the load transfer system.

Location: Ex3 - The Structural Engineer May 2014 (example on p.36)

Design of ground-supported concrete slabs to TR34 (4th edition)

This proforma is for the design of ground-supported concrete floors for industrial buildings. The design method employed here is as per TR34 (4th edition) entitled 'Concrete Industrial Ground Floors' by The Concrete Society (March 2016 publication).

```
 ___ ____________________________________
|
|
|h                                       ← concrete slab
|
|___ ====================================  ← slip membrane
   /\/\/\/\/\/\/\/\/\/\/\/\/\/\/\/\/\/\/\  ← sub-base
    ____________________________________
   ////////////////////////////////////// ← subgrade
```

Assume a slab thickness h=150 mm
Type of sub-base Granular material
Type of sub-base to be well graded granular material such as Type 1 or Type 2 complying with and laid in accordance with the Highway Agency Specification for Highway Works. All fill material should be checked for content of potentially expansive materials or reactions with lime and/or cement.
Sub-base thickness sbb=150 mm
Modulus of subgrade reaction k=0.05 N/mm³

Pallet racking (single leg)

Length of baseplate (in X-dir.) Lr=100 mm
Breadth of baseplate (in Y-dir.) br=100 mm
Radius of relative stiffness:
l=(Ecm*h^3/(12*(1-u^2)*k))^0.25=664.85 mm
Dist.from edge to first rack leg Defr=0 mm
Reduced design load Dldr=0.8*Sld=57.6 kN

CASE 4: Check for punching shear
Punching shear may be critical for the edge loading condition and will be considered. The shear stress will be checked at the face of the loaded area and on a perimeter at a distance 2d from the loaded area.

```
                          •   •
 punching shear    •          •                P1=72 kN
 perimeter ──────►•     ├┼Lr   •    br         2d=225 mm
                  •    P1 □      •   ┼          Lr=100 mm
                  •              •   ┼          br=100 mm
 slab ──►  ──────•──────────────•──┼──────      Defr=0 mm
 edge             ├ 2d ┼┼ 2d ┤    Defr
```

PLAN SHOWING PUNCHING SHEAR PERIMETER

(1) At the face of the loaded area
Shear stress vEd=Sld*1000/(uo*d)=2.1333

Shear strength vRd=0.5*k2*fcd=5.5808 N/mm²
As vRd ≥ vEd (5.5808 N/mm² ≥ 2.1333 N/mm²), shear stress is OK.

(2) At the critical perimeter
Shear capacity for fibre-reinforced concrete:
vRd=(0.035*k1^1.5*fck^0.5+0.12*Re3*fctk/2)=0.68848 N/mm²
Slab load capacity Pp=vRd*u1*d/1000=77.985 kN
As Sld ≤ Pp (72 kN ≤ 77.985 kN), this loading case is OK.

General storage loading - random loading in kN/m²

Uniformly distributed load udl=30 kN/m² (unfactored)
Maximum UDL permitted w=5.95*lam^2*Mn=73.544 kN/m²
As udl ≤ w (30 kN/m² ≤ 73.544 kN/m²), this loading case is OK.

Internal wall loading - line load in kN/m

Line load from wall (unfactored) ll=30 kN/m

For line loads remote from joints or slab edges:
Maximum line load permitted Plin=4*lam*Mn=46.014 kN/m
As ll ≤ Plin (30 kN/m ≤ 46.014 kN/m), this loading case is OK.

For line loads adjacent to a free edge:
Maximum line load permitted Plin=3*lam*Mn=34.511 kN/m
As ll ≤ Plin (30 kN/m ≤ 34.511 kN/m), this loading case is OK.

Mezzanine floor

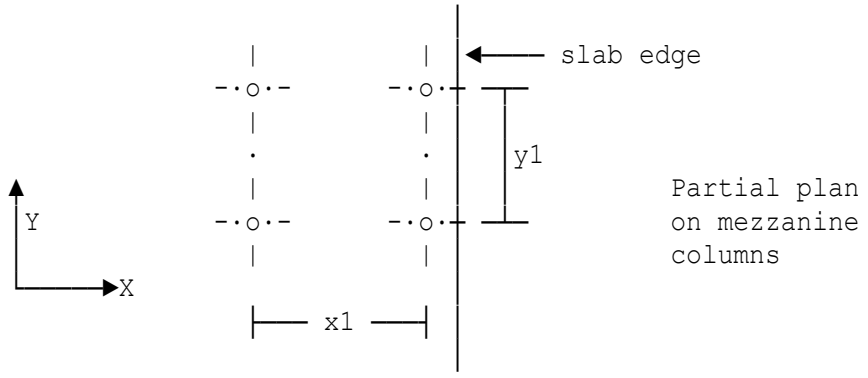

Distance between columns x1=5 m
Distance between columns y1=4 m
Design column load (internal) Wci=(x1*y1)*wt=183.75 kN
Design column load (free edge) Wce=(x1*y1)/2*wt=91.875 kN
Length of baseplate (in X-dir.) Lm=250 mm
Breadth of baseplate (in Y-dir.) bm=250 mm

CASE 1: Internal loading
Load capacity (rat=a1/l) Pui=Pui1+(Pui2-Pui1)*rat/0.2=224.23 kN
As Wci ≤ Pui (183.75 kN/m ≤ 224.23 kN/m), this loading case is OK.

CASE 2: Free edge loading
Load capacity (TR34 Eq. 23) Pue1=(PI*(Mn+Mp)/2)+2*Mn=46.639 kN

Load capacity (TR34 Eq. 24) Pue2=(PI*(Mn+Mp)+4*Mn)/(1-2*a1/(3 *l))=108.64 kN
Load capacity (rat=a1/l) Pue=Pue1+(Pue2-Pue1)*rat/0.2=112.41 kN
As Wce ≤ Pue (91.875 kN/m ≤ 112.41 kN/m), this loading case is OK.

Forklift truck loading

Maximum wheel load (unfactored) wl=40 kN
Design load per wheel Dlw=gamD*wl=64 kN

CASE 1: Internal loading
Load capacity (rat2=a2/l) Pu=Pu1+(Pu2-Pu1)*rat2/0.2=137.32 kN
As Dlw ≤ Pu (64 kN ≤ 137.32 kN), internal loading case is OK.

CASE 2: Loading at joints
Load capacity (a2/l=0) Pu1=(PI*(Mp+Mn)/2)+2*Mn=46.639 kN
Load capacity (a2/l≥0.2) Pu2=(PI*(Mp+Mn)+4*Mn)/(1-2*a2/(3*l)) =97.771 kN
Load capacity (rat2=a2/l) Pu=Pu1+(Pu2-Pu1)*rat2/0.2=64.264 kN
As Dlw ≤ Pu (64 kN ≤ 64.264 kN), this loading case is OK.

CASE 3: Corner loading
It is assumed that the corner loading is not relevant provided adequate load transfer is provided and the edge condition has been considered.

Deflection check - Serviceability Limit State (SLS)

The deflection expression below is by 'Westergaard' and can be used to obtain an approximate quantification of the slab deflection under a concentrated load P.
Deflection (edge condition) DEL=c1*P*1000/(k*l^2)=1.2499 mm

SUMMARY OF RESULTS

Ground-supported slab	**Steel-fibre-reinforced**
Minimum suitable slab thickness	**150 mm**
Char cylinder compressive strength	**32 N/mm²**
Char cube compressive strength	**40 N/mm²**
Modulus of subgrade reaction	**0.05 N/mm³**
Type of sub-base	**Granular material**
Sub-base thickness	**150 mm**
Racking leg baseplate	**100 mm x 100 mm**
Mezzanine column base plates	**250 mm x 250 mm**
Unfactored racking single leg load	**60 kN**
Unfactored UDL storage loading	**30 kN/m²**
Unfactored internal line loading	**30 kN/m**
Unfactored mezz. slab permanent load	**1.25 kN/m²**
Unfactored mezz. slab variable load	**5 kN/m²**
Unfactored wheel load	**40 kN**

The design calculations assume 20% load-transfer across the joint. Ensure this can be accommodated by checking with the designer of the load transfer system.

Location: Ex4 - Ground-supported fabric-reinforced slab

Design of ground-supported concrete slabs to TR34 (4th edition)

This proforma is for the design of ground-supported concrete floors for industrial buildings. The design method employed here is as per TR34 (4th edition) entitled 'Concrete Industrial Ground Floors' by The Concrete Society (March 2016 publication).

```
 ___ ___________________________________
|
h|                                      ← concrete slab
|
|___ ===================================  ← slip membrane
   /\/\/\/\/\/\/\/\/\/\/\/\/\/\/\/\/\/\  ← sub-base
    ___________________________________
   ////////////////////////////////////  ← subgrade
```

Assume a slab thickness h=200 mm
Type of sub-base Granular material
Type of sub-base to be well graded granular material such as Type 1 or Type 2 complying with and laid in accordance with the Highway Agency Specification for Highway Works. All fill material should be checked for content of potentially expansive materials or reactions with lime and/or cement.
Sub-base thickness sbb=150 mm
Modulus of subgrade reaction k=0.05 N/mm³

Back-to-back pallet racking

Length of baseplate (in X-dir.) Lr=100 mm
Breadth of baseplate (in Y-dir.) br=100 mm
Radius of relative stiffness:
l=(Ecm*h^3/(12*(1-u^2)*k))^0.25=824.95 mm
Dist.from edge to first rack leg Defr=0 mm
Dist.between double rack legs Dbr=250 mm
Characteristic strength of steel fyk=500 N/mm²
Effective depth of fabric-r'ment d1=150 mm
Area of bottom fabric reinf'ment As=142 mm²
Load-transfer across the joint ltr=24 %
Reduced design load Dldr=Dld-ltr/100*Dld=109.44 kN

CASE 4: Check for punching shear
Punching shear may be critical for the edge loading condition and will be considered. The shear stress will be checked at the face of the loaded area and on a perimeter at a distance 2d from the loaded area.

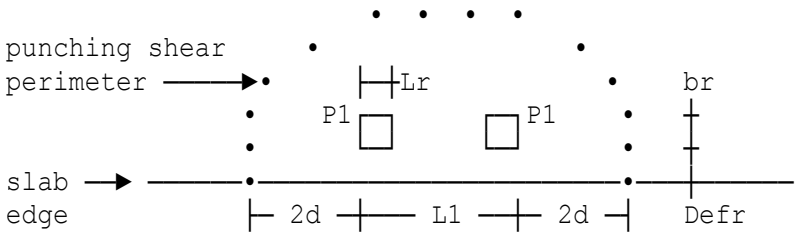

P1=72 kN
2d=300 mm
Lr=100 mm
L1=350 mm
Defr=0 mm
br=100 mm

PLAN SHOWING PUNCHING SHEAR PERIMETER

(1) At the face of the loaded area
Shear stress vEd=Dld*1000/(uo*d)=1.7455
Shear strength vRd=0.5*k2*fcd=5.5808 N/mm²
As vRd ≥ vEd (5.5808 N/mm² ≥ 1.7455 N/mm²), shear stress is OK.

(2) At the critical perimeter
Shear capacity for fabric-reinforced concrete:
vRd=(0.18/gamc)*k1*(100*p1*fck)^0.33=0.34598 N/mm²
Limiting capacity vRd=0.035*k1^1.5*fck^0.5=0.56 N/mm²
Slab load capacity Pp=vRd*u1*d/1000=125.37 kN
Reduced design load Dldr=Dld-ltr/100*Dld=109.44 kN
As Dldr ≤ Pp (109.44 kN ≤ 125.37 kN), this loading case is OK.

General storage loading - random loading in kN/m²

Uniformly distributed load udl=30 kN/m² (unfactored)
Maximum UDL permitted w=5.95*lam^2*Mn=84.921 kN/m²
As udl ≤ w (30 kN/m² ≤ 84.921 kN/m²), this loading case is OK.

Internal wall loading - line load in kN/m

Line load from wall (unfactored) ll=30 kN/m

For line loads remote from joints or slab edges:
Maximum line load permitted Plin=4*lam*Mn=65.928 kN/m
As ll ≤ Plin (30 kN/m ≤ 65.928 kN/m), this loading case is OK.

For line loads adjacent to a free edge:
Maximum line load permitted Plin=3*lam*Mn=49.446 kN/m
As ll ≤ Plin (30 kN/m ≤ 49.446 kN/m), this loading case is OK.

Mezzanine floor

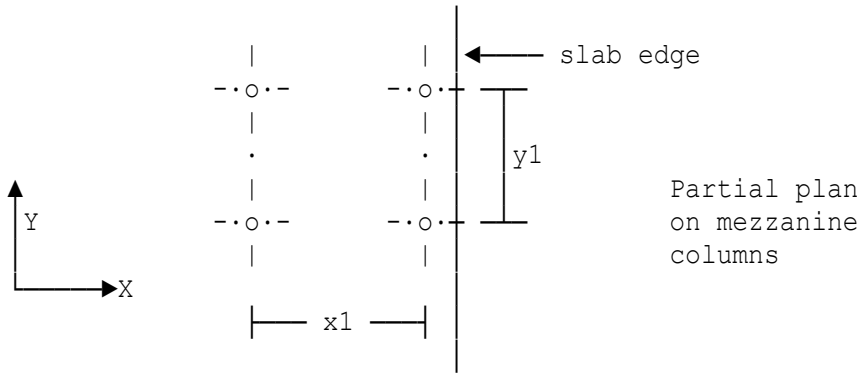

Distance between columns x1=5 m
Distance between columns y1=4 m
Design column load (internal) Wci=(x1*y1)*wt=183.75 kN
Design column load (free edge) Wce=(x1*y1)/2*wt=91.875 kN
Length of baseplate (in X-dir.) Lm=250 mm
Breadth of baseplate (in Y-dir.) bm=250 mm

CASE 1: Internal loading
Load capacity (rat=a1/l) Pui=Pui1+(Pui2-Pui1)*rat/0.2=342.43 kN
As Wci ≤ Pui (183.75 kN/m ≤ 342.43 kN/m), this loading case is OK.

CASE 2: Free edge loading
Load capacity (TR34 Eq. 23) Pue1=(PI*(Mn+Mp)/2)+2*Mn=81.784 kN
Load capacity (TR34 Eq. 24) Pue2=(PI*(Mn+Mp)+4*Mn)/(1-2*a1/(3*l))=184.61 kN
Load capacity (rat=a1/l) Pue=Pue1+(Pue2-Pue1)*rat/0.2=169.69 kN
As Wce ≤ Pue (91.875 kN/m ≤ 169.69 kN/m), this loading case is OK.

Forklift truck loading

Maximum wheel load (unfactored) wl=40 kN
Design load per wheel Dlw=gamD*wl=64 kN

CASE 1: Internal loading
Load capacity (rat2=a2/l) Pu=Pu1+(Pu2-Pu1)*rat2/0.2=225.28 kN
As Dlw ≤ Pu (64 kN ≤ 225.28 kN), internal loading case is OK.

CASE 2: Loading at joints
Load capacity (a2/l=0) Pu1=(PI*(Mp+Mn)/2)+2*Mn=81.784 kN
Load capacity (a2/l≥0.2) Pu2=(PI*(Mp+Mn)+4*Mn)/(1-2*a2/(3*l))=169.86 kN
Load capacity (rat2=a2/l) Pu=Pu1+(Pu2-Pu1)*rat2/0.2=106.25 kN
As Dlw ≤ Pu (64 kN ≤ 106.25 kN), this loading case is OK.

CASE 3: Corner loading
It is assumed that the corner loading is not relevant provided adequate load transfer is provided and the edge condition has been considered.

Relative position of truck wheel and racking leg

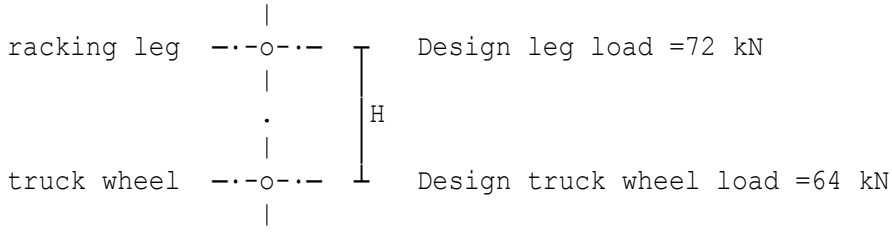

EQUIVALENT LOADED AREAS FOR RACKING
LEGS AND FORK LIFT TRUCK WHEELS

Distance from wheel to baseplate H=300 mm

CASE 1: Internal loading
Load capacity (Rat=aeq/l) Pu=Pu1+(Pu2-Pu1)*Rat/0.2=297.76 kN
As Dld ≤ Pu (144 kN ≤ 297.76 kN), internal loading case is OK.

CASE 2: Free edge loading (at a joint)
Load capacity (a/l=0) Pu1=(PI*(Mp+Mn)/2)+2*Mn=81.784 kN
Load capacity (a/l≥0.2) Pu2=(PI*(Mp+Mn)+4*Mn)/(1-2*a/(3*l))
=170.62 kN
Load capacity (Rat=aeq/l) Pu=Pu1+(Pu2-Pu1)*Rat/0.2=141.69 kN
Reduced design load Dldr=Dld-ltr/100*Dld=109.44 kN
As Dldr ≤ Pu (109.44 kN ≤ 141.69 kN), this loading case is OK.

Deflection check - Serviceability Limit State (SLS)

The deflection expression below is by 'Westergaard' and can be used to obtain an approximate quantification of the slab deflection under a concentrated load P.
Deflection (edge condition) DEL=c1*P*1000/(k*l^2)=1.5588 mm

SUMMARY OF RESULTS

Ground-supported slab	**Fabric-reinforced**
Area of fabric-reinforcement	**142 mm²**
Minimum suitable slab thickness	**200 mm**
Characteristic strength of steel	**500 N/mm²**
Char cylinder compressive strength	**32 N/mm²**
Char cube compressive strength	**40 N/mm²**
Modulus of subgrade reaction	**0.05 N/mm³**
Type of sub-base	**Granular material**
Sub-base thickness	**150 mm**
Distance between double rack legs	**250 mm**
Racking leg baseplate	**100 mm x 100 mm**
Mezzanine column base plates	**250 mm x 250 mm**
Unfactored racking single leg load	**60 kN**
Unfactored UDL storage loading	**30 kN/m²**
Unfactored internal line loading	**30 kN/m**
Unfactored mezz. slab permanent load	**1.25 kN/m²**
Unfactored mezz. slab variable load	**5 kN/m²**
Unfactored wheel load	**40 kN**

Design calculations assume 24 % load-transfer across the joint.

Location: Ex5 - Ground-supported fabric-reinforced slab

Design of ground-supported concrete slabs to TR34 (4th edition)

This proforma is for the design of ground-supported concrete floors for industrial buildings. The design method employed here is as per TR34 (4th edition) entitled 'Concrete Industrial Ground Floors' by The Concrete Society (March 2016 publication).

```
 ___ ____________________________________
|
h|                                        ← concrete slab
|
|___ ====================================  ← slip membrane
   /\/\/\/\/\/\/\/\/\/\/\/\/\/\/\/\/\/\/\  ← sub-base
    ____________________________________
   ////////////////////////////////////// ← subgrade
```

Assume a slab thickness h=225 mm
Type of sub-base Granular material
Type of sub-base to be well graded granular material such as Type 1 or Type 2 complying with and laid in accordance with the Highway Agency Specification for Highway Works. All fill material should be checked for content of potentially expansive materials or reactions with lime and/or cement.
Sub-base thickness sbb=200 mm
Modulus of subgrade reaction k=0.05 N/mm³

Pallet racking (single leg)

Length of baseplate (in X-dir.) Lr=100 mm
Breadth of baseplate (in Y-dir.) br=100 mm
Radius of relative stiffness:
l=(Ecm*h^3/(12*(1-u^2)*k))^0.25=913.55 mm
Dist.from edge to first rack leg Defr=100 mm
Characteristic strength of steel fyk=500 N/mm²
Effective depth of fabric-r'ment d1=175 mm
Area of bottom fabric reinf'ment As=393 mm²

CASE 4: Check for punching shear
Punching shear may be critical for the edge loading condition and will be considered. The shear stress will be checked at the face of the loaded area and on a perimeter at a distance 2d from the loaded area.

```
                          •   •
punching shear     •           •                P1=72 kN
perimeter ———→•      ├┼Lr    •    br           2d=337.5 mm
              •    P1 □        •    ┼           Lr=100 mm
              •                •    ┼           br=100 mm
slab ——→ ———•————————————•————————            Defr=100 mm
edge          ├ 2d ┼┼ 2d ┤    Defr
```

PLAN SHOWING PUNCHING SHEAR PERIMETER

(1) At the face of the loaded area

Shear stress vEd=Sld*1000/(uo*d)=0.82286
Shear strength vRd=0.5*k2*fcd=6.72 N/mm²
As vRd ≥ vEd (6.72 N/mm² ≥ 0.82286 N/mm²), shear stress is OK.

(2) At the critical perimeter
Shear capacity for fabric-reinforced concrete:
vRd=(0.18/gamc)*k1*(100*p1*fck)^0.33=0.49527 N/mm²
Limiting capacity vRd=0.035*k1^1.5*fck^0.5=0.6261 N/mm²
Slab load capacity Pp=vRd*u1*d/1000=175.26 kN
As Sld ≤ Pp (72 kN ≤ 175.26 kN), this loading case is OK.

General storage loading - random loading in kN/m²

Uniformly distributed load udl=30 kN/m² (unfactored)
Maximum UDL permitted w=5.95*lam^2*Mn=98.865 kN/m²
As udl ≤ w (30 kN/m² ≤ 98.865 kN/m²), this loading case is OK.

Internal wall loading - line load in kN/m

Line load from wall (unfactored) ll=30 kN/m

For line loads remote from joints or slab edges:
Maximum line load permitted Plin=4*lam*Mp=88.853 kN/m
As ll ≤ Plin (30 kN/m ≤ 88.853 kN/m), this loading case is OK.

For line loads adjacent to a free edge:
Maximum line load permitted Plin=3*lam*Mp=66.64 kN/m
As ll ≤ Plin (30 kN/m ≤ 66.64 kN/m), this loading case is OK.

Mezzanine floor

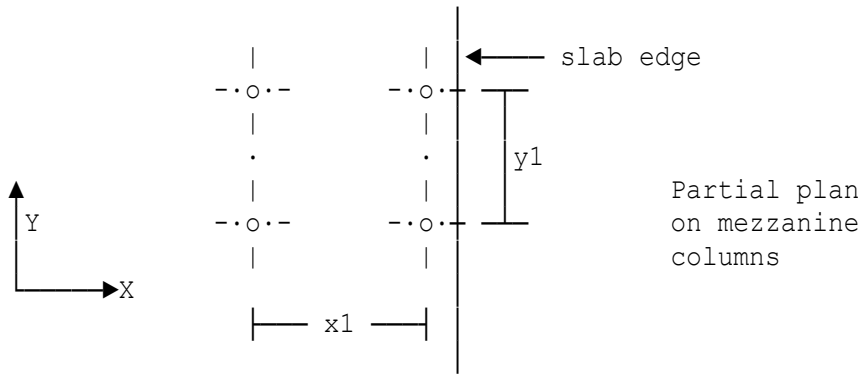

Distance between columns x1=5 m
Distance between columns y1=4 m
Design column load (internal) Wci=(x1*y1)*wt=183.75 kN
Design column load (free edge) Wce=(x1*y1)/2*wt=91.875 kN
Length of baseplate (in X-dir.) Lm=250 mm
Breadth of baseplate (in Y-dir.) bm=250 mm

CASE 1: Internal loading
Load capacity (rat=a1/l) Pui=Pui1+(Pui2-Pui1)*rat/0.2=648.08 kN
As Wci ≤ Pui (183.75 kN/m ≤ 648.08 kN/m), this loading case is OK.

CASE 2: Free edge loading

Load capacity (TR34 Eq. 23) Pue1=(PI*(Mn+Mp)/2)+2*Mn=141.65 kN
Load capacity (TR34 Eq. 24) Pue2=(PI*(Mn+Mp)+4*Mn)/(1-2*a1/(3*l))=315.82 kN
Load capacity (rat=a1/l) Pue=Pue1+(Pue2-Pue1)*rat/0.2=276.1 kN
As Wce ≤ Pue (91.875 kN/m ≤ 276.1 kN/m), this loading case is OK.

Forklift truck loading

Maximum wheel load (unfactored) wl=40 kN
Design load per wheel Dlw=gamD*wl=64 kN

CASE 1: Internal loading
Load capacity (rat2=a2/l) Pu=Pu1+(Pu2-Pu1)*rat2/0.2=439.81 kN
As Dlw ≤ Pu (64 kN ≤ 439.81 kN), internal loading case is OK.

CASE 2: Loading at joints
Load capacity (a2/l=0) Pu1=(PI*(Mp+Mn)/2)+2*Mn=141.65 kN
Load capacity (a2/l≥0.2) Pu2=(PI*(Mp+Mn)+4*Mn)/(1-2*a2/(3*l))=293.11 kN
Load capacity (rat2=a2/l) Pu=Pu1+(Pu2-Pu1)*rat2/0.2=179.65 kN
As Dlw ≤ Pu (64 kN ≤ 179.65 kN), this loading case is OK.

CASE 3: Corner loading
Load capacity (rat2=a2/l) Pu=Pu1+(Pu2-Pu1)*rat2/0.2=69.422 kN
As Dlw ≤ Pu (64 kN ≤ 69.422 kN), corner loading case is OK.

Relative position of truck wheel and racking leg

```
                 |
racking leg  —·-o-·—  ┬   Design leg load =72 kN
                 |    │
                 .    │H
                 |    │
truck wheel  —·-o-·—  ┴   Design truck wheel load =64 kN
                 |
```

EQUIVALENT LOADED AREAS FOR RACKING
LEGS AND FORK LIFT TRUCK WHEELS

Distance from wheel to baseplate H=300 mm

CASE 1: Internal loading
Load capacity (Rat=aeq/l) Pu=Pu1+(Pu2-Pu1)*Rat/0.2=569.97 kN
As Dld ≤ Pu (144 kN ≤ 569.97 kN), internal loading case is OK.

CASE 2: Free edge loading (at a joint)
Load capacity (a/l=0) Pu1=(PI*(Mp+Mn)/2)+2*Mn=141.65 kN
Load capacity (a/l≥0.2) Pu2=(PI*(Mp+Mn)+4*Mn)/(1-2*a/(3*l))=294.29 kN
Load capacity (Rat=aeq/l) Pu=Pu1+(Pu2-Pu1)*Rat/0.2=234.6 kN
As Dld ≤ Pu (144 kN ≤ 234.6 kN), this loading case is OK.

Deflection check - Serviceability Limit State (SLS)

The deflection expression below is by 'Westergaard' and can be used to obtain an approximate quantification of the slab deflection under a concentrated load P.
Deflection (edge condition) DEL=c1*P*1000/(k*l^2)=0.66202 mm

SUMMARY OF RESULTS

Ground-supported slab	**Fabric-reinforced**
Area of fabric-reinforcement	**393 mm²**
Minimum suitable slab thickness	**225 mm**
Characteristic strength of steel	**500 N/mm²**
Char cylinder compressive strength	**40 N/mm²**
Char cube compressive strength	**50 N/mm²**
Modulus of subgrade reaction	**0.05 N/mm³**
Type of sub-base	**Granular material**
Sub-base thickness	**200 mm**
Racking leg baseplate	**100 mm x 100 mm**
Mezzanine column base plates	**250 mm x 250 mm**
Unfactored racking single leg load	**60 kN**
Unfactored UDL storage loading	**30 kN/m²**
Unfactored internal line loading	**30 kN/m**
Unfactored mezz. slab permanent load	**1.25 kN/m²**
Unfactored mezz. slab variable load	**5 kN/m²**
Unfactored wheel load	**40 kN**

Location: Ex6 - Fabric-reinforced slab (TR34 Appendix E, 3rd Ed)

Design of ground-supported concrete slabs to TR34 (4th edition)

This proforma is for the design of ground-supported concrete floors for industrial buildings. The design method employed here is as per TR34 (4th edition) entitled 'Concrete Industrial Ground Floors' by The Concrete Society (March 2016 publication).

```
 ___ ___________________________________
|
h|                                      ← concrete slab
|
|___ ===================================  ← slip membrane
   /\/\/\/\/\/\/\/\/\/\/\/\/\/\/\/\/\/\  ← sub-base
    ___________________________________
   ////////////////////////////////////  ← subgrade
```

Assume a slab thickness h=175 mm
Type of sub-base Granular material
Type of sub-base to be well graded granular material such as Type 1 or Type 2 complying with and laid in accordance with the Highway Agency Specification for Highway Works. All fill material should be checked for content of potentially expansive materials or reactions with lime and/or cement.
Sub-base thickness sbb=150 mm
Modulus of subgrade reaction k=0.05 N/mm³

Back-to-back pallet racking

Length of baseplate (in X-dir.) Lr=100 mm
Breadth of baseplate (in Y-dir.) br=100 mm
Radius of relative stiffness:
l=(Ecm*h^3/(12*(1-u^2)*k))^0.25=746.33 mm
Dist.from edge to first rack leg Defr=80 mm
Dist.between double rack legs Dbr=250 mm
Characteristic strength of steel fyk=500 N/mm²
Effective depth of fabric-r'ment d1=135 mm
Area of bottom fabric reinf'ment As=142 mm²
Load-transfer across the joint ltr=24 %
Reduced design load Dldr=Dld-ltr/100*Dld=109.44 kN

CASE 4: Check for punching shear
Punching shear may be critical for the edge loading condition and will be considered. The shear stress will be checked at the face of the loaded area and on a perimeter at a distance 2d from the loaded area.

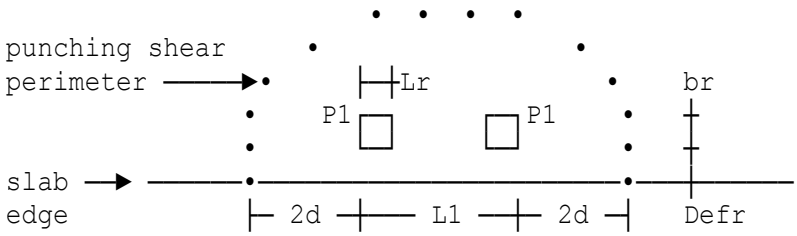

P1=72 kN
2d=262.5 mm
Lr=100 mm
L1=350 mm
Defr=80 mm
br=100 mm

PLAN SHOWING PUNCHING SHEAR PERIMETER

(1) At the face of the loaded area
Shear stress vEd=Dld*1000/(uo*d)=1.5023
Shear strength vRd=0.5*k2*fcd=5.5808 N/mm²
As vRd ≥ vEd (5.5808 N/mm² ≥ 1.5023 N/mm²), shear stress is OK.

(2) At the critical perimeter
Shear capacity for fabric-reinforced concrete:
vRd=(0.18/gamc)*k1*(100*p1*fck)^0.33=0.35822 N/mm²
Limiting capacity vRd=0.035*k1^1.5*fck^0.5=0.56 N/mm²
Slab load capacity Pp=vRd*u1*d/1000=117.8 kN
Reduced design load Dldr=Dld-ltr/100*Dld=109.44 kN
As Dldr ≤ Pp (109.44 kN ≤ 117.8 kN), this loading case is OK.

General storage loading - random loading in kN/m²

Uniformly distributed load udl=30 kN/m² (unfactored)
Maximum UDL permitted w=5.95*lam^2*Mn=79.436 kN/m²
As udl ≤ w (30 kN/m² ≤ 79.436 kN/m²), this loading case is OK.

Internal wall loading - line load in kN/m

Line load from wall (unfactored) ll=30 kN/m

For line loads remote from joints or slab edges:
Maximum line load permitted Plin=4*lam*Mn=55.793 kN/m
As ll ≤ Plin (30 kN/m ≤ 55.793 kN/m), this loading case is OK.

For line loads adjacent to a free edge:
Maximum line load permitted Plin=3*lam*Mn=41.845 kN/m
As ll ≤ Plin (30 kN/m ≤ 41.845 kN/m), this loading case is OK.

Mezzanine floor

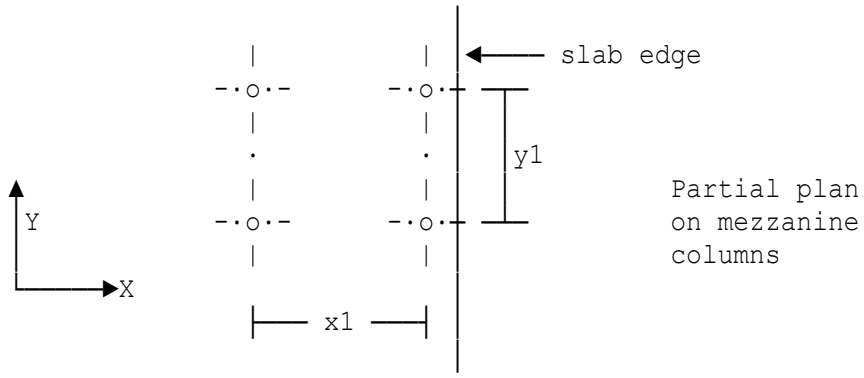

Distance between columns x1=5 m
Distance between columns y1=4 m
Design column load (internal) Wci=(x1*y1)*wt=183.75 kN
Design column load (free edge) Wce=(x1*y1)/2*wt=91.875 kN
Length of baseplate (in X-dir.) Lm=250 mm
Breadth of baseplate (in Y-dir.) bm=250 mm

CASE 1: Internal loading
Load capacity (rat=a1/l) Pui=Pui1+(Pui2-Pui1)*rat/0.2=292.8 kN
As Wci ≤ Pui (183.75 kN/m ≤ 292.8 kN/m), this loading case is OK.

CASE 2: Free edge loading
Load capacity (TR34 Eq. 23) Pue1=(PI*(Mn+Mp)/2)+2*Mn=64.473 kN
Load capacity (TR34 Eq. 24) Pue2=(PI*(Mn+Mp)+4*Mn)/(1-2*a1/(3*l))=147.53 kN
Load capacity (rat=a1/l) Pue=Pue1+(Pue2-Pue1)*rat/0.2=142.96 kN
As Wce ≤ Pue (91.875 kN/m ≤ 142.96 kN/m), this loading case is OK.

Forklift truck loading

Maximum wheel load (unfactored) wl=40 kN
Design load per wheel Dlw=gamD*wl=64 kN

CASE 1: Internal loading
Load capacity (rat2=a2/l) Pu=Pu1+(Pu2-Pu1)*rat2/0.2=186.52 kN
As Dlw ≤ Pu (64 kN ≤ 186.52 kN), internal loading case is OK.

CASE 2: Loading at joints
Load capacity (a2/l=0) Pu1=(PI*(Mp+Mn)/2)+2*Mn=64.473 kN
Load capacity (a2/l≥0.2) Pu2=(PI*(Mp+Mn)+4*Mn)/(1-2*a2/(3*l))=134.45 kN
Load capacity (rat2=a2/l) Pu=Pu1+(Pu2-Pu1)*rat2/0.2=85.961 kN
As Dlw ≤ Pu (64 kN ≤ 85.961 kN), this loading case is OK.

CASE 3: Corner loading
It is assumed that the corner loading is not relevant provided adequate load transfer is provided and the edge condition has been considered.

Relative position of truck wheel and racking leg

```
                  |
racking leg  —·-o-·—  ┬   Design leg load =72 kN
                  |   │
                  .   │H
                  |   │
truck wheel  —·-o-·—  ┴   Design truck wheel load =64 kN
                  |
```

EQUIVALENT LOADED AREAS FOR RACKING
LEGS AND FORK LIFT TRUCK WHEELS

Distance from wheel to baseplate H=300 mm

CASE 1: Internal loading
Load capacity (Rat=aeq/l) Pu=Pu1+(Pu2-Pu1)*Rat/0.2=251.56 kN
As Dld ≤ Pu (144 kN ≤ 251.56 kN), internal loading case is OK.

CASE 2: Free edge loading (at a joint)
Load capacity (a/l=0) Pu1=(PI*(Mp+Mn)/2)+2*Mn=64.473 kN
Load capacity (a/l≥0.2) Pu2=(PI*(Mp+Mn)+4*Mn)/(1-2*a/(3*l))
=135.12 kN
Load capacity (Rat=aeq/l) Pu=Pu1+(Pu2-Pu1)*Rat/0.2=117.13 kN
Reduced design load Dldr=Dld-ltr/100*Dld=109.44 kN
As Dldr ≤ Pu (109.44 kN ≤ 117.13 kN), this loading case is OK.

Deflection check - Serviceability Limit State (SLS)

The deflection expression below is by 'Westergaard' and can be used to obtain an approximate quantification of the slab deflection under a concentrated load P.
Deflection (edge condition) DEL=c1*P*1000/(k*l^2)=1.9044 mm

SUMMARY OF RESULTS

Ground-supported slab	**Fabric-reinforced**
Area of fabric-reinforcement	**142 mm²**
Minimum suitable slab thickness	**175 mm**
Characteristic strength of steel	**500 N/mm²**
Char cylinder compressive strength	**32 N/mm²**
Char cube compressive strength	**40 N/mm²**
Modulus of subgrade reaction	**0.05 N/mm³**
Type of sub-base	**Granular material**
Sub-base thickness	**150 mm**
Distance between double rack legs	**250 mm**
Racking leg baseplate	**100 mm x 100 mm**
Mezzanine column base plates	**250 mm x 250 mm**
Unfactored racking single leg load	**60 kN**
Unfactored UDL storage loading	**30 kN/m²**
Unfactored internal line loading	**30 kN/m**
Unfactored mezz. slab permanent load	**1.25 kN/m²**
Unfactored mezz. slab variable load	**5 kN/m²**
Unfactored wheel load	**40 kN**

Design calculations assume 24 % load-transfer across the joint.

Location: Typical problem

Design of r.c.pad footing with shear checks

Design to BS8110(1997), partial safety factor for steel gammaS=1.15

All calculations to requirements in Clauses 3.4.4.4 and 3.11 of BS8110: Part 1.
Moment & shear are positive in directions shown.

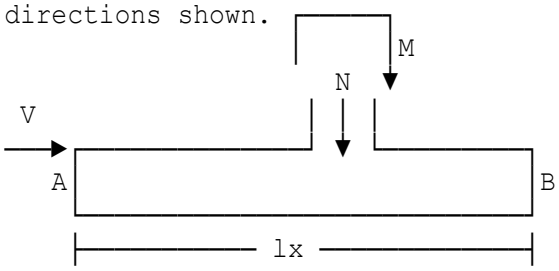

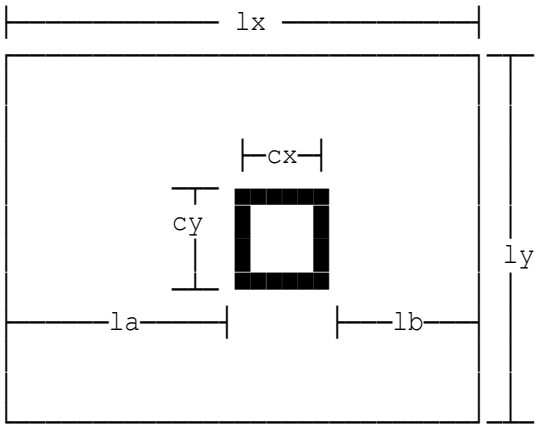

Ultimate axial force in column	N=1606 kN
Ultimate moment in column	M=163.6 kNm
Ultimate shear force at base top	V=73 kN
Column dimension in X-direction	cx=450 mm
Column dimension in Y-direction	cy=450 mm
Base length [in bending (X) dir.]	lx=3.6 m
Width of base (i.e. in Y-dir.)	ly=2.8 m

Note: A separate check should be made to ensure the resistance of the base against sliding due to this shear force.

Characteristic steel strength	fy=500 N/mm²
Characteristic concrete strength	fcu=35 N/mm²
Overall thickness of base	h=500 mm
Designated exposure class is XC2	
Specified fixing tolerance	tol=10 mm
Cover to reinforcement	cover=35 mm

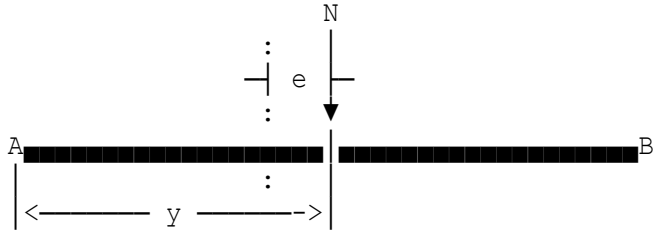

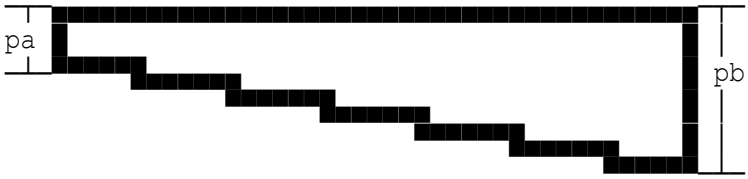

Diameter of X-direction bars diax=16 mm
As actual shear stress (v=0.45759 N/mm²) does not exceed design stress (vc=0.60348 N/mm²), no shear steel is needed across Y-direction faces.
As actual shear stress (v=0.45759 N/mm²) does not exceed design stress (vc=0.58906 N/mm²), no shear steel is needed across Y-direction faces.
Diameter of Y-direction bars diay=12 mm
As actual shear stress (v=0.26974 N/mm²) does not exceed design stress (vc=0.5382 N/mm²), no shear steel is needed across X-direction faces.
As actual shear stress (v=0.26974 N/mm²) does not exceed design stress (vc=0.50729 N/mm²), no shear steel is needed across X-direction faces.

SUMMARY OF REINFORCEMENT REQUIRED IN X-DIRECTION
Since base width (2.8 m) exceeds (3cy/2+9dx/2)=2.7315 m) according to Cl.3.11.3.2, two-thirds of steel must be concentrated within central zone extending 1½d from each column face (i.e. total width =1.821 m).

	Characteristic strength	**500 N/mm²**
	Diameter of bars	**16 mm**
CENTRAL ZONE	**Number of bars required**	**12**
	Alternate bars curtailed at 930 mm from either side of column face.	
	Max spacing of bars	**160 mm**
	Area required	**2241.7 mm²**
	Area provided	**2412.7 mm²**
	Percentage provided	**0.26 %**
EDGE ZONES	**Number of bars required**	**6**
	Max spacing of bars	**175 mm**
	(Note: reduce spacing of outermost bars to obtain side cover.)	
	Area required	**1120.8 mm²**
	Area provided	**1206.4 mm²**
	Percentage provided	**0.25 %**
ACROSS ENTIRE BASE	**Total number of bars**	**18**
	Effective depth	**457 mm**
	Total steel area reqd.	**3362.5 mm²**
	Total steel area prov.	**3619.1 mm²**
	Av.percentage provided	**0.26 %**
	Av.weight of steel prov.	**10.146 kg/m²**

SUMMARY OF REINFORCEMENT REQUIRED IN Y-DIRECTION
Since base width (3.6 m) exceeds (3cx/2+9dy/2=2.6685 m), according to Cl.3.11.3.2, two-thirds of steel must be concentrated within central zone extending 1½d from each column face (i.e.total width =1.779 m).

	Characteristic strength	500 N/mm²
	Diameter of bars	12 mm
CENTRAL ZONE	Number of bars required	14
	Max spacing of bars	130 mm
	Area required	1442.6 mm²
	Area provided	1583.4 mm²
	Percentage provided	0.18 %
EDGE ZONES	Number of bars required	12
	Max spacing of bars	170 mm
	(Note: reduce spacing of outermost bars to obtain side cover.)	
	Area required	1183.7 mm²
	Area provided	1357.2 mm²
	Percentage provided	0.15 %
	(Note: steel area required is minimum permitted by Table 3.25.)	
ACROSS ENTIRE BASE	Total number of bars	26
	Effective depth	443 mm
	Total steel area reqd.	2626.2 mm²
	Total steel area prov.	2940.5 mm²
	Av.percentage provided	0.16 %
	Av.weight of steel prov.	6.412 kg/m²

QUANTITIES	Total volume of concrete required	5.04 m³
	Total area of formwork (base sides only)	6.4 m²
	Total volume of reinforcement	18486 cm³
	Total weight of reinforcement	145.11 kg

No shear reinforcement is required.

Location: Large square base. High moment. Mild steel reinforcement.

Design of r.c.pad footing with shear checks

Design to BS8110(1997), partial safety factor for steel gammaS=1.15

All calculations to requirements in Clauses 3.4.4.4 and 3.11 of BS8110: Part 1.
Moment & shear are positive in directions shown.

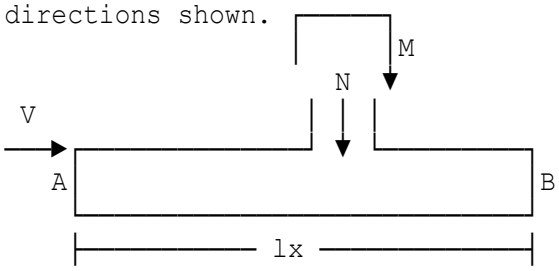

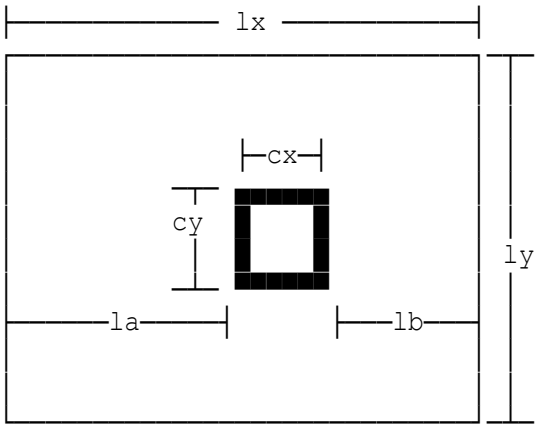

Ultimate axial force in column	N=1000 kN
Ultimate moment in column	M=5000 kNm
Ultimate shear force at base top	V=0 kN
Column dimension in X-direction	cx=500 mm
Column dimension in Y-direction	cy=500 mm
Base length [in bending (X) dir.]	lx=10 m
Width of base (i.e. in Y-dir.)	ly=10 m
Characteristic steel strength	fy=250 N/mm²
Characteristic concrete strength	fcu=50 N/mm²
Overall thickness of base	h=800 mm
Designated exposure class is XC3	
Specified fixing tolerance	tol=10 mm
Cover to reinforcement	cover=30 mm

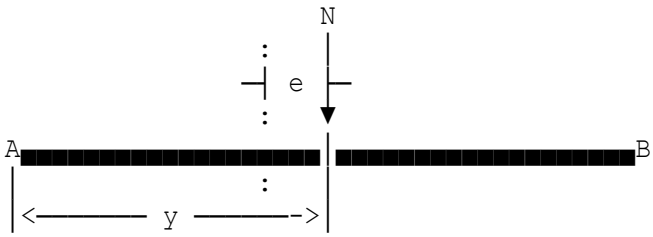

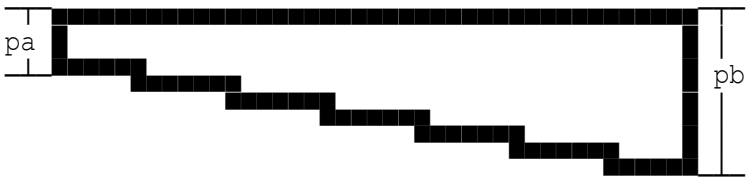

Diameter of X-direction bars diax=32 mm
As actual shear stress (v=0.15041 N/mm²) does not exceed design stress
(vc=0.76039 N/mm²), no shear steel is needed across Y-direction faces.
As actual shear stress (v=0.15041 N/mm²) does not exceed design stress
(vc=0.56049 N/mm²), no shear steel is needed across Y-direction faces.
Diameter of Y-direction bars diay=32 mm
As actual shear stress (v=0.056528 N/mm²) does not exceed design
stress
(vc=0.56576 N/mm²), no shear steel is needed across X-direction faces.
As actual shear stress (v=0.056528 N/mm²) does not exceed design
stress
(vc=0.57237 N/mm²), no shear steel is needed across X-direction faces.

SUMMARY OF REINFORCEMENT REQUIRED IN X-DIRECTION
Since base width (10 m) exceeds (3cy/2+9dx/2)=4.134 m)
according to Cl.3.11.3.2, two-thirds of steel must be concentrated
within central zone extending 1½d from each column face
(i.e. total width =2.756 m).

	Characteristic strength	**250 N/mm²**
	Diameter of bars	**32 mm**
CENTRAL ZONE	**Number of bars required**	**19**
	Alternate bars curtailed at 2435 mm from either side of column face.	
	Max spacing of bars	**150 mm**
	Area required	**14770 mm²**
	Area provided	**15281 mm²**
	Percentage provided	**0.69 %**
EDGE ZONES	**Number of bars required**	**20**
	Max spacing of bars	**400 mm**
	(Note: reduce spacing of outermost bars to obtain side cover.)	
	Area required	**13908 mm²**
	Area provided	**16085 mm²**
	Percentage provided	**0.28 %**
	(Note: steel area required is minimum permitted by Table 3.25.)	
ACROSS ENTIRE BASE	**Total number of bars**	**39**
	Effective depth	**752 mm**
	Total steel area reqd.	**28679 mm²**
	Total steel area prov.	**31366 mm²**
	Av.percentage provided	**0.39 %**
	Av.weight of steel prov.	**24.622 kg/m²**

SUMMARY OF REINFORCEMENT REQUIRED IN Y-DIRECTION
Since base width (10 m) exceeds (3cx/2+9dy/2=3.99 m), according to Cl.3.11.3.2, two-thirds of steel must be concentrated within central zone extending 1½d from each column face (i.e.total width =2.66 m).

	Characteristic strength	250 N/mm²
	Diameter of bars	32 mm
CENTRAL ZONE	Number of bars required	7
	Max spacing of bars	400 mm
	Area required	5107.2 mm²
	Area provided	5629.7 mm²
	Percentage provided	0.26 %
	(Note: steel area required is minimum permitted by Table 3.25.)	
EDGE ZONES	Number of bars required	20
	Max spacing of bars	400 mm
	(Note: reduce spacing of outermost bars to obtain side cover.)	
	Area required	14093 mm²
	Area provided	16085 mm²
	Percentage provided	0.27 %
	(Note: steel area required is minimum permitted by Table 3.25.)	
ACROSS ENTIRE BASE	Total number of bars	27
	Effective depth	720 mm
	Total steel area reqd.	19200 mm²
	Total steel area prov.	21715 mm²
	Av.percentage provided	0.27 %
	Av.weight of steel prov.	17.046 kg/m²

QUANTITIES	Total volume of concrete required	80 m³
	Total area of formwork (base sides only)	32 m²
	Total volume of reinforcement	457758 cm³
	Total weight of reinforcement	3593.4 kg

No shear reinforcement is required.

Location: Small base, Non-standard bars, no bar curtail./re-spacing

Design of r.c.pad footing with shear checks

Design to BS8110(1997), partial safety factor for steel gammaS=1.15

All calculations to requirements in Clauses 3.4.4.4 and 3.11 of BS8110: Part 1.
Moment & shear are positive in directions shown.

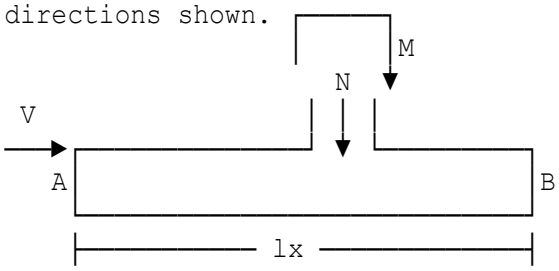

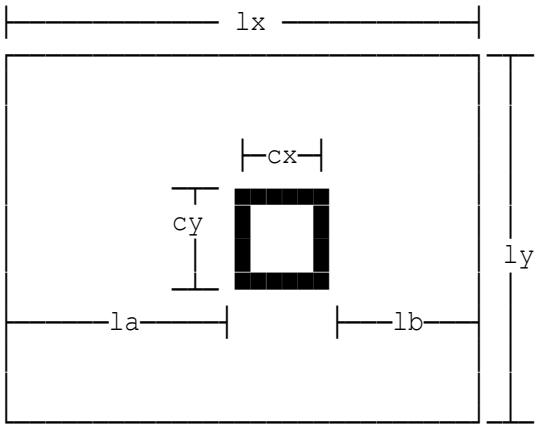

Ultimate axial force in column	N=2500 kN
Ultimate moment in column	M=500 kNm
Ultimate shear force at base top	V=0 kN
Column dimension in X-direction	cx=350 mm
Column dimension in Y-direction	cy=350 mm
Base length [in bending (X) dir.]	lx=3 m
Width of base (i.e. in Y-dir.)	ly=2 m
Characteristic steel strength	fy=350 N/mm²
Characteristic concrete strength	fcu=40 N/mm²
Min.permiss.proportion of steel	Pmin1=0.00196
Critical depth for bar spacing	hcrit=230 mm
Ultimate bond stress	fbu=2.3274 N/mm²
Overall thickness of base	h=750 mm

WARNING:
Estimated eff.depth of main steel is 0.6375 m. As distance from base edge to column face in Y-direction (i.e. 0.825 m) is less than 1½ times this value (0.95625 m), special consideration must be given to the location and configuration of planes controlling both direct and punching shear.
This is beyond the scope of the current proforma.

Location: Typical problem

Design of reinforced concrete pad footing with shear checks

All calculations to EC2 Part 1-1
and IStructE Manual to EC2.
Moment & shear are positive in
directions shown.

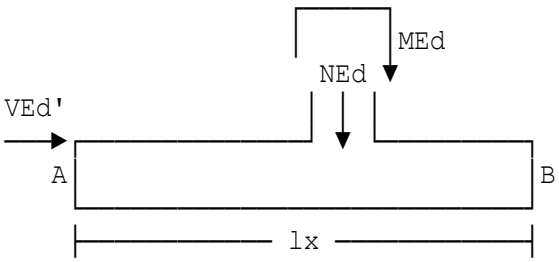

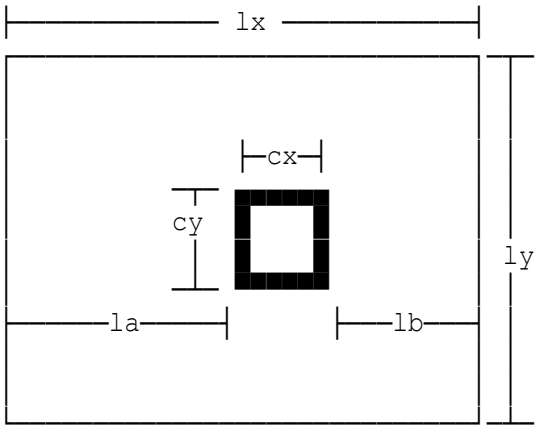

Ultimate axial force in column	NEd=1606 kN
Ultimate moment in column	MEd=163.6 kNm
Ultimate shear force at base top	VEd'=73 kN
Column dimension in X-direction	cx=450 mm
Column dimension in Y-direction	cy=450 mm
Base length (bending in X-dir.)	lx=3.6 m
Width of base (i.e. in Y-dir.)	ly=2.8 m
Partial safety factor for steel	gams=1.15
Partial safety factor for conc.	gamc=1.5

Note: A separate check should be made to ensure the resistance of the base against sliding due to this shear force.

Char yield strength of reinf'ment	fyk=500 N/mm²
Overall thickness of base	h=550 mm
Diameter of X-direction bars	diax=16 mm
Diameter of Y-direction bars	diay=12 mm

Ground pressures

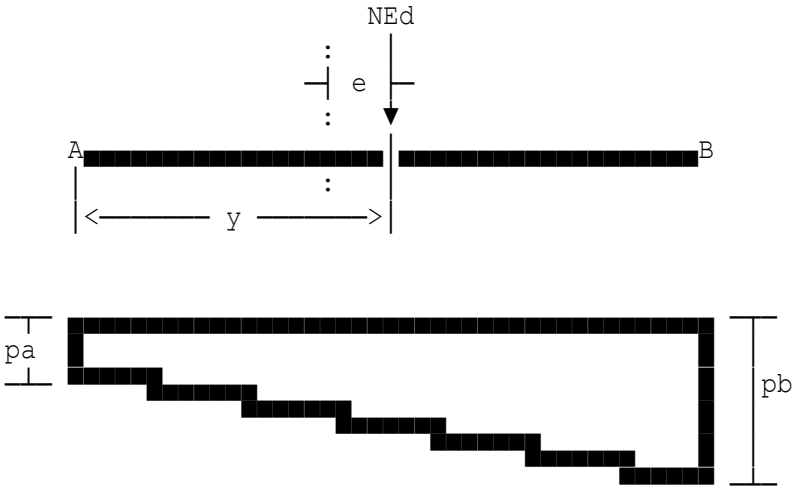

Pressure at end A pa=(NEd+Swt)/(lx*ly)-(NEd+Swt)*e/z
=144.2 kN/m²

Pressure at end B pb=(NEd+Swt)/(lx*ly)+(NEd+Swt)*e/z
=211.58 kN/m²

Ultimate moments and shears

Design shear force at 1.0dx Vdx=566.4 kN

Reinforcement to resist bending in X-direction

Diameter of X-direction bars diax=16 mm
Area of tension steel required Asx=Mdx*10^6/(fyk/gams*z)=3038 mm²
Area of tension steel provided Asprx=Nox*PI*diax^2/4=3217 mm²

Check spacing and proportion of steel

Percentage of steel provided per=Asprx/(10*widY*h)
=0.2089 % of gross section.

Shear across base in X-direction

Shear resistance VRdc=beta'*CRdc*ks*vRdc*bw*d/1000
=1027 kN
Modified shear resistance VRdc=VRdm=1092 kN

SHEAR SUMMARY Shear force 566.4 kN
Shear resistance 1092 kN

Hence section is satisfactory, no shear reinforcement is required.

Reinforcement to resist bending in Y-direction

Area of tension steel required Asy=Mdy*10^6/(fyk/gams*z)=1944 mm²

Reinforcement: central strip of width 1.929 m

Area of tension steel provided Aspry=Noy*PI*diay^2/4=1696 mm²

Check spacing and proportion of steel

Percentage of steel provided per=Aspry/(10*widX*h)
=0.1599 % of gross section.

Reinforcement: edge strips, each of width 0.8355 m

Area of tension steel provided Aspry=Noy*PI*diay^2/4=1583 mm²

Check spacing and proportion of steel

Percentage of steel provided per=Aspry/(10*widX*h)
=0.1723 % of gross section.

Shear across base in Y-direction

Shear: central strip of width 1.929 m

Shear resistance VRdc=beta'*CRdc*ks*vRdc*bw*d/1000
=638.6 kN
Modified shear resistance VRdc=VRdm=737.7 kN

SHEAR SUMMARY Shear force 405.8 kN
Shear resistance 737.7 kN

Hence section is satisfactory, no shear reinforcement is required.

Shear: edge strips, each of width 0.8355 m

Shear resistance VRdc=beta'*CRdc*ks*vRdc*bw*d/1000
=567.2 kN
Modified shear resistance VRdc=VRdm=639.1 kN

SHEAR SUMMARY Shear force 405.8 kN
Shear resistance 639.1 kN

Hence section is satisfactory, no shear reinforcement is required.

Check punching shear at column face

Punching shear at column face VEd=beta*NEd=1847 kN
Maximum shear resistance VRdmax=0.5*v*fcd*uo*dav/1000=4476 kN
The punching shear at column face (VEd=1847 kN) is less than the maximum shear resistance (VRdmax=4476 kN), hence OK.

Check punching shear at critical plane

Punching-shear resistance reqd. VEd=pf*lx*ly-Vup=878 kN
Shear stress at control perimeter vEd=beta*VEd*1000/(u1*dav)
=0.2498 N/mm²
Design punching shear resistance vRdc=(0.18/gamc)*k*(100*p1
*fck)^0.333=0.3534 N/mm²
Enhanced punching shear resist. vRdc=senh*vRdc=0.3534 N/mm²
Design punching shear resistance vRdc=senh*0.035*k^1.5*fck^0.5
=0.3863 N/mm²

SUMMARY OF REINFORCEMENT REQUIRED IN X-DIRECTION
As base width (2.8 m) does not exceed (3cy/2+9dx/2=4.2 m) bars should be spaced uniformly across base.

	Characteristic strength	500 N/mm²
	Diameter of bars	16 mm
ACROSS ENTIRE BASE	Total number of bars	16
	Max spacing of bars	180 mm
	(Note: reduce spacing as necessary to accommodate bars required)	
	Effective depth	507 mm
	Total steel area reqd.	3038 mm²
	Total steel area prov.	3217 mm²

SUMMARY OF REINFORCEMENT REQUIRED IN Y-DIRECTION
Since base width (3.6 m) exceeds (3cx/2+9dy/2=2.894 m) two-thirds of steel must be concentrated within central zone extending 1½d from each column face (i.e. total width =1.929 m).

	Characteristic strength	500 N/mm²
	Diameter of bars	12 mm
CENTRAL ZONE	Number of bars required	15
	Max spacing of bars	130 mm
	Area required	1591 mm²
	Area provided	1696 mm²
	Percentage provided	0.16 %
EDGE ZONES	Number of bars required	14
	Max spacing of bars	130 mm
	(Note: reduce spacing as necessary to accommodate bars required)	
	Area required	1379 mm²
	Area provided	1583 mm²
	Percentage provided	0.17 %
ACROSS ENTIRE BASE	Total number of bars	29
	Effective depth	493 mm
	Total steel area reqd.	2970 mm²
	Total steel area prov.	3280 mm²
QUANTITIES	Total concrete volume	5.544 m³
	Total area of formwork (base sides only).	7.04 m²

Location: Large square base with high moment

Design of reinforced concrete pad footing with shear checks

All calculations to EC2 Part 1-1
and IStructE Manual to EC2.
Moment & shear are positive in
directions shown.

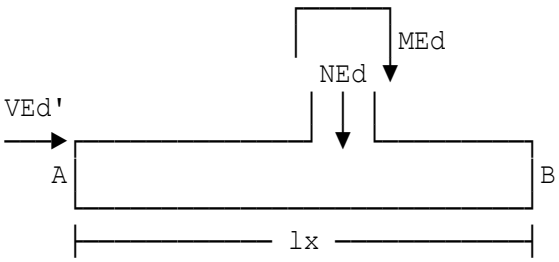

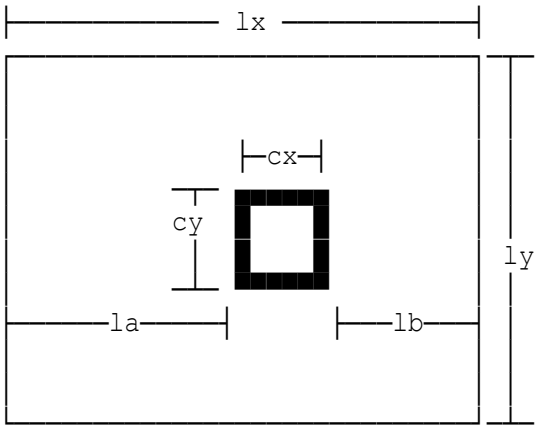

Ultimate axial force in column	NEd=1000 kN
Ultimate moment in column	MEd=5000 kNm
Ultimate shear force at base top	VEd'=0 kN
Column dimension in X-direction	cx=500 mm
Column dimension in Y-direction	cy=500 mm
Base length (bending in X-dir.)	lx=10 m
Width of base (i.e. in Y-dir.)	ly=10 m
Partial safety factor for steel	gams=1.15
Partial safety factor for conc.	gamc=1.5
Char yield strength of reinf'ment	fyk=500 N/mm²
Overall thickness of base	h=900 mm
Diameter of X-direction bars	diax=32 mm
Diameter of Y-direction bars	diay=32 mm

Ground pressures

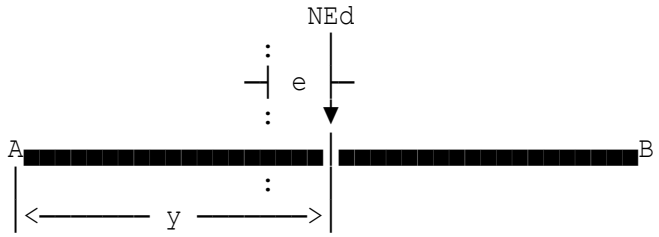

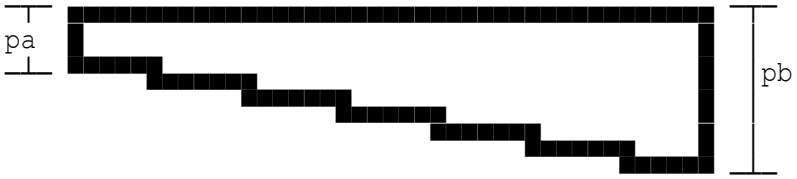

Pressure at end A pa=(NEd+Swt)/(lx*ly)-(NEd+Swt)*e/z
=10.375 kN/m²

Pressure at end B pb=(NEd+Swt)/(lx*ly)+(NEd+Swt)*e/z
=70.375 kN/m²

Ultimate moments and shears

Design shear force at 1.0dx Vdx=1117.6 kN

Reinforcement to resist bending in X-direction

Diameter of X-direction bars diax=32 mm
Area of tension steel required Asx=Mdx*10^6/(fyk/gams*z)=9894 mm²

Reinforcement: central strip of width 3.026 m

Area of tension steel provided Asprx=Nox*PI*diax^2/4=8847 mm²

Check spacing and proportion of steel

Percentage of steel provided per=Asprx/(10*widY*h)
=0.3248 % of gross section.

Reinforcement: edge strips, each of width 3.487 m

Min area of main steel required Asx=Pmin1*1000*widY*h=9415 mm²
Area of tension steel provided Asprx=Nox*PI*diax^2/4=19302 mm²

Check spacing and proportion of steel

Percentage of steel provided per=Asprx/(10*widY*h)
=0.3075 % of gross section.

Shear across base in X-direction

Shear: central strip of width 3.026 m

Shear resistance VRdc=beta'*CRdc*ks*vRdc*bw*d/1000
=2186 kN

SHEAR SUMMARY	**Shear force**	**1118 kN**
	Shear resistance	**2186 kN**

Hence section is satisfactory, no shear reinforcement is required.

Shear: edge strips, each of width 3.487 m

Shear resistance VRdc=beta'*CRdc*ks*vRdc*bw*d/1000
=4947 kN

SHEAR SUMMARY	**Shear force**	**1118 kN**
	Shear resistance	**4947 kN**

Hence section is satisfactory, no shear reinforcement is required.

Reinforcement to resist bending in Y-direction

Area of tension steel required Asy=Mdy*10^6/(fyk/gams*z)=3372 mm²

Reinforcement: central strip of width 2.93 m

Area of tension steel provided Aspry=Noy*PI*diay^2/4=8042 mm²

Check spacing and proportion of steel

Percentage of steel provided per=Aspry/(10*widX*h)
=0.305 % of gross section.

Reinforcement: edge strips, each of width 3.535 m

Area of tension steel provided Aspry=Noy*PI*diay^2/4=20910 mm²

Check spacing and proportion of steel

Percentage of steel provided per=Aspry/(10*widX*h)
=0.3286 % of gross section.

Shear across base in Y-direction

Shear: central strip of width 2.93 m

Shear resistance VRdc=beta'*CRdc*ks*vRdc*bw*d/1000
=2033 kN

SHEAR SUMMARY	**Shear force**	**398.5 kN**
	Shear resistance	**2033 kN**

Hence section is satisfactory, no shear reinforcement is required.

Shear: edge strips, each of width 3.535 m

Shear resistance VRdc=beta'*CRdc*ks*vRdc*bw*d/1000
=5029 kN

SHEAR SUMMARY	**Shear force**	**398.5 kN**
	Shear resistance	**5029 kN**

Hence section is satisfactory, no shear reinforcement is required.

Check punching shear at column face

Punching shear at column face VEd=beta*NEd=1150 kN
Maximum shear resistance VRdmax=0.5*v*fcd*uo*dav/1000=11101 kN
The punching shear at column face (VEd=1150 kN) is less than the maximum shear resistance (VRdmax=11101 kN), hence OK.

Check punching shear at critical plane

Punching-shear resistance reqd. VEd=pf*lx*ly-Vup=3548 kN

Shear stress at control perimeter vEd=beta*VEd*1000/(u1*dav)=0.399 N/mm²
Design punching shear resistance vRdc=(0.18/gamc)*k*(100*p1
*fck)^0.333=0.427 N/mm²
Enhanced punching shear resist. vRdc=senh*vRdc=0.427 N/mm²

SUMMARY OF REINFORCEMENT REQUIRED IN X-DIRECTION
Since base width (10 m) exceeds (3cy/2+9dx/2=4.539 m)
two-thirds of steel must be concentrated within central zone
extending 1½d from each column face
(i.e. total width =3.026 m).

	Characteristic strength	**500 N/mm²**
	Diameter of bars	**32 mm**
CENTRAL ZONE	**Number of bars required**	**11**
	Max spacing of bars	**300 mm**
	Area required	**6596 mm²**
	Area provided	**8847 mm²**
	Percentage provided	**0.32 %**
EDGE ZONES	**Number of bars required**	**24**
	Max spacing of bars	**300 mm**
	(Note: reduce spacing as necessary to accommodate bars required)	
	Area required	**9415 mm²**
	Area provided	**19302 mm²**
	Percentage provided	**0.31 %**
ACROSS ENTIRE BASE	**Total number of bars**	**35**
	Effective depth	**842 mm**
	Total steel area reqd.	**16011 mm²**
	Total steel area prov.	**28149 mm²**

SUMMARY OF REINFORCEMENT REQUIRED IN Y-DIRECTION
Since base width (10 m) exceeds (3cx/2+9dy/2=4.395 m)
two-thirds of steel must be concentrated within central zone
extending 1½d from each column face
(i.e. total width =2.93 m).

	Characteristic strength	500 N/mm²
	Diameter of bars	32 mm
CENTRAL ZONE	Number of bars required	10
	Max spacing of bars	300 mm
	Area required	3956 mm²
	Area provided	8042 mm²
	Percentage provided	0.3 %
EDGE ZONES	Number of bars required	26
	Max spacing of bars	300 mm
	(Note: reduce spacing as necessary to accommodate bars required)	
	Area required	9545 mm²
	Area provided	20910 mm²
	Percentage provided	0.33 %
ACROSS ENTIRE BASE	Total number of bars	36
	Effective depth	810 mm
	Total steel area reqd.	13500 mm²
	Total steel area prov.	28953 mm²
QUANTITIES	Total concrete volume	90 m³
	Total area of formwork (base sides only).	36 m²

Location: Small base, non-standard bars, no bar curtail./re-spacing

Design of reinforced concrete pad footing with shear checks

All calculations to EC2 Part 1-1
and IStructE Manual to EC2.
Moment & shear are positive in
directions shown.

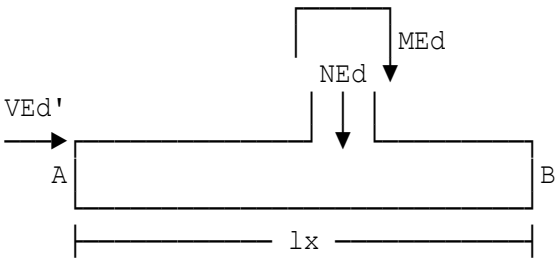

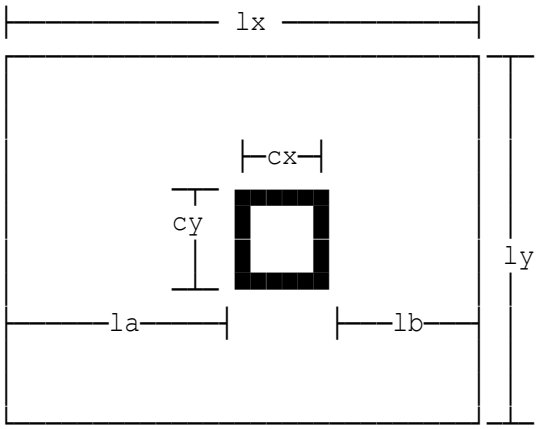

Ultimate axial force in column	NEd=2500 kN
Ultimate moment in column	MEd=500 kNm
Ultimate shear force at base top	VEd'=0 kN
Column dimension in X-direction	cx=350 mm
Column dimension in Y-direction	cy=350 mm
Base length (bending in X-dir.)	lx=3 m
Width of base (i.e. in Y-dir.)	ly=2 m
Partial safety factor for steel	gams=1.15
Partial safety factor for conc.	gamc=1.5
Char yield strength of reinf'ment	fyk=500 N/mm²
Overall thickness of base	h=750 mm

WARNING:
Estimated eff. depth of main steel is 0.6375 m. As distance from base edge to column face in Y-direction (i.e. 0.825 m) is less than 1½ times this value (0.95625 m), special consideration must be given to the location and configuration of planes controlling both direct and punching shear.
This is beyond the scope of the current proforma.

Location: Typical uniformly-loaded deep beam with high-yield steel.

Design of deep beam using Kong simplified method

See Table 148 of Reinforced Concrete Designer's Handbook 10th edition.

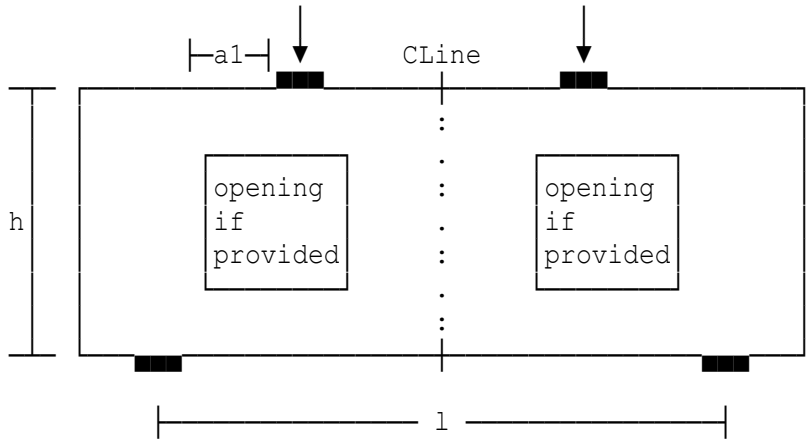

Span between centres of supports	l=3 m
Overall depth of beam	h=2 m
Breadth of beam	b=0.5 m
Load per unit length (factored)	w=500 kN/m
Grade of concrete	fcu=30 N/mm²
Yield strength of reinforcement	fy=500 N/mm²
From table of data given by Kong,	Robins and Sharp, concrete cylinder
splitting tensile strength	Ft=2.74 N/mm²
Designated exposure class is XC1	
Specified fixing tolerance	tol=10 mm
Cover to all bars	cover=35 mm

Main reinforcement

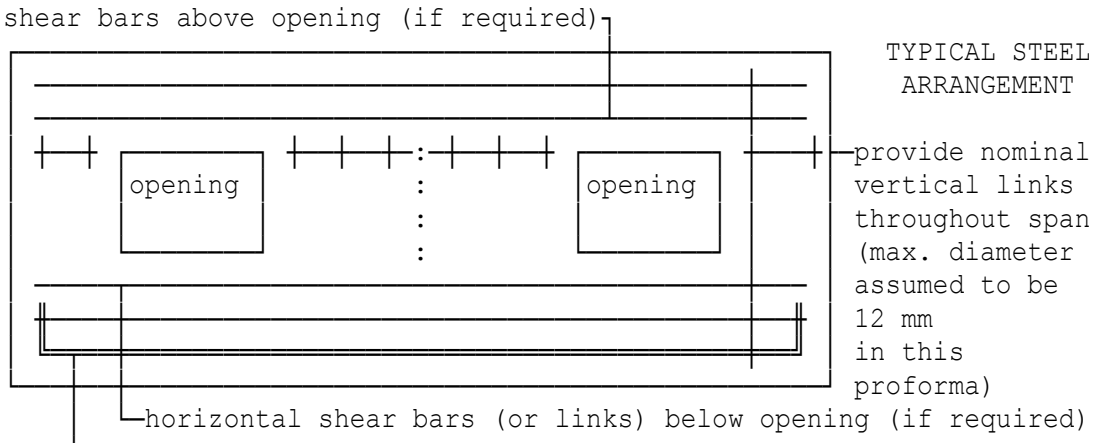

Note: If shear steel is needed, bars must be provided both above and below opening.

Diameter of main tension bars	dia=12 mm
Number of main bars	NumBar=12
Effective depth of main bars	d=1925 mm

MAIN TENSION	**Characteristic strength**	**500 N/mm²**
REINFORCEMENT	**Diameter of bars**	**12 mm**
SUMMARY	**Number of bars**	**12**
	Area required	**1300 mm²**
	Area provided	**1357.2 mm²**
	Percentage provided	**0.13572 %**

Diameter of anti-cracking bars Ldia=12 mm

ANTI-CRACKING	**Characteristic strength**	**500 N/mm²**
REINFORCEMENT	**Diameter of bars**	**12 mm**
SUMMARY	**Number of bars (each face)**	**11**
	Spacing	**130 mm**

Location: Lightweight concrete beam with point loads and mild steel.

Design of deep beam using Kong simplified method

See Table 148 of Reinforced Concrete Designer's Handbook 10th edition.

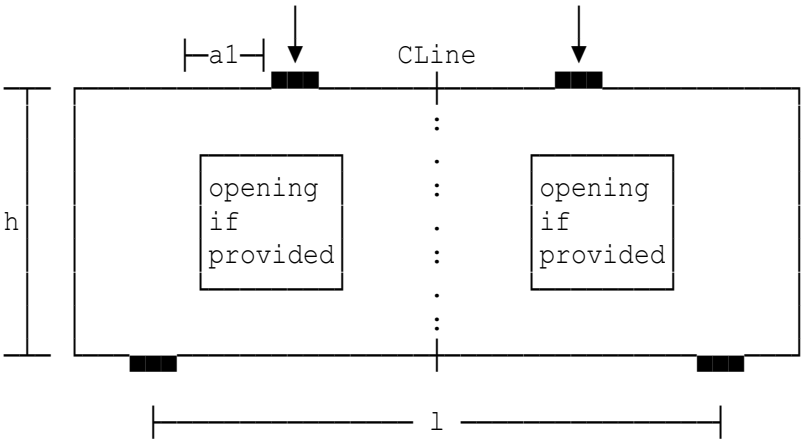

Span between centres of supports l=5 m
Overall depth of beam h=4 m
Breadth of beam b=0.6 m

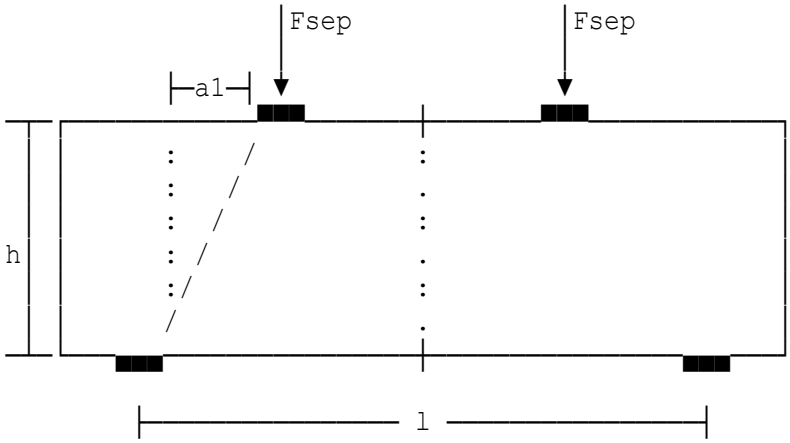

Value of each point load Fsep=750 kN
Distance to point load a1=1.5 m

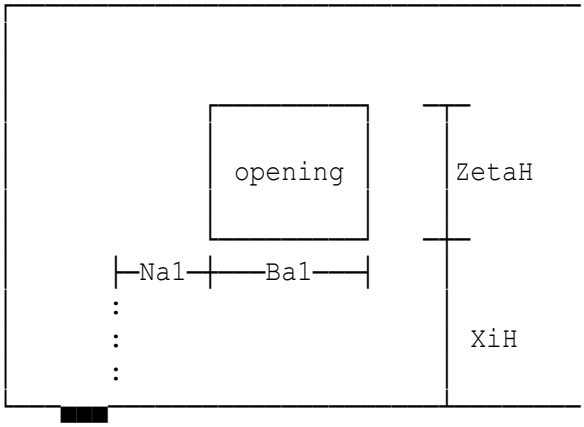

Support face to edge of opening Na1=0.3 m

Width of opening	Ba1=0.3 m
Beam soffit to bottom of opening	XiH=1.6 m
Depth of opening	ZetaH=0.3 m
Grade of concrete	fcu=35 N/mm²
Yield strength of reinforcement	fy=250 N/mm²
Cylinder splitting tensile strength of concrete	Ft=Ft=2.95 N/mm²
Designated exposure class is XC2	
Specified fixing tolerance	tol=10 mm
Cover to all bars	cover=70 mm

Main reinforcement

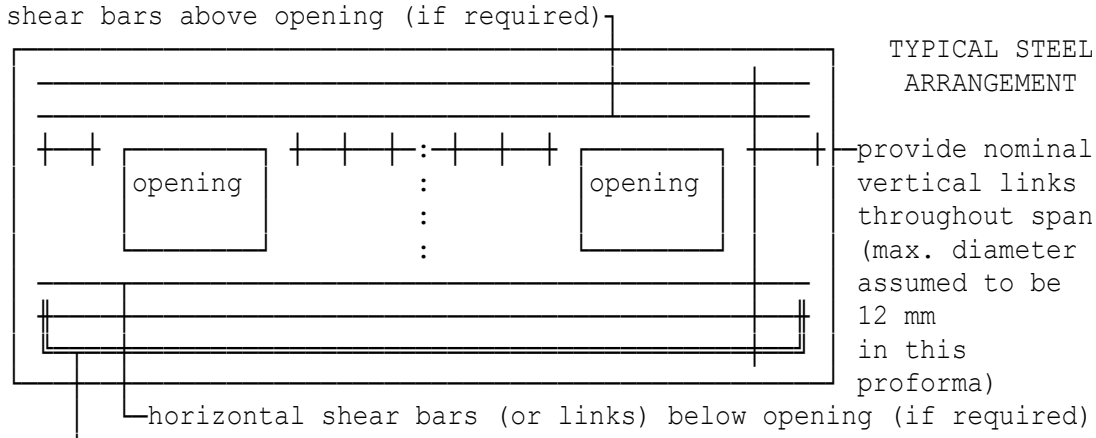

Note: If shear steel is needed, bars must be provided both above and below opening.

Diameter of main tension bars	dia=25 mm
Number of main bars	NumBar=12
Effective depth of main bars	d=3890 mm

MAIN TENSION REINFORCEMENT SUMMARY	**Characteristic strength**	**250 N/mm²**
	Diameter of bars	**25 mm**
	Number of bars	**12**
	Area required	**5760 mm²**
	Area provided	**5890.5 mm²**
	Percentage provided	**0.24544 %**

Diameter of anti-cracking bars Ldia=12 mm

ANTI-CRACKING REINFORCEMENT SUMMARY	**Characteristic strength**	**250 N/mm²**
	Diameter of bars	**12 mm**
	Number of bars (each face)	**39**
	Spacing	**70 mm**

Location: Uniformly-loaded beam with square-twist reinforcement

Design of deep beam using Kong simplified method

See Table 148 of Reinforced Concrete Designer's Handbook 10th edition.

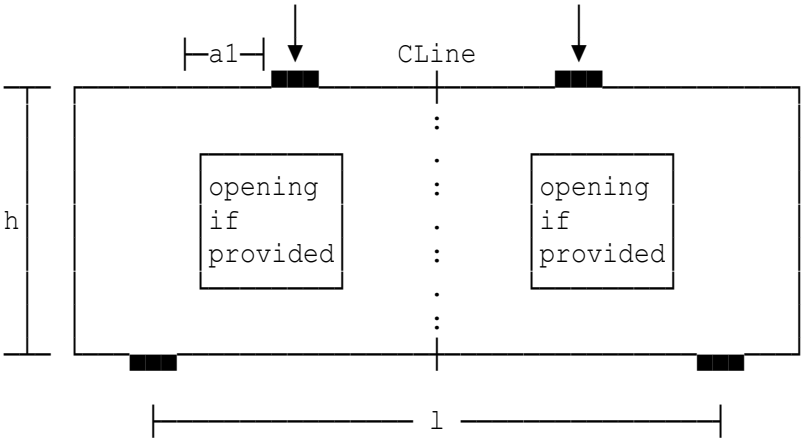

Span between centres of supports	l=4.5 m
Overall depth of beam	h=2.5 m
Breadth of beam	b=0.6 m
Load per unit length (factored)	w=500 kN/m

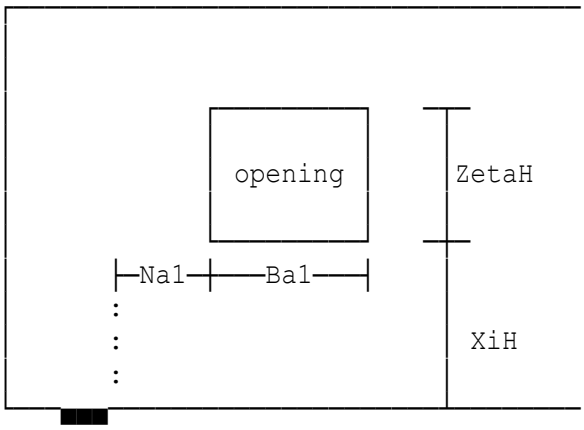

Support face to edge of opening	Na1=0.2 m
Width of opening	Ba1=0.5 m
Beam soffit to bottom of opening	XiH=0.8 m
Depth of opening	ZetaH=0.5 m
Grade of concrete	fcu=40 N/mm²
Yield strength of reinforcement	fy=425 N/mm²
Cylinder splitting tensile strength of concrete	Ft=Ft=3.16 N/mm²
Min.permiss.percentage of steel	k0=0.16
Value of reinforcement constant	k2=187.5
Designated exposure class is XC3	
Specified fixing tolerance	tol=10 mm
Cover to all bars	cover=35 mm

Main reinforcement

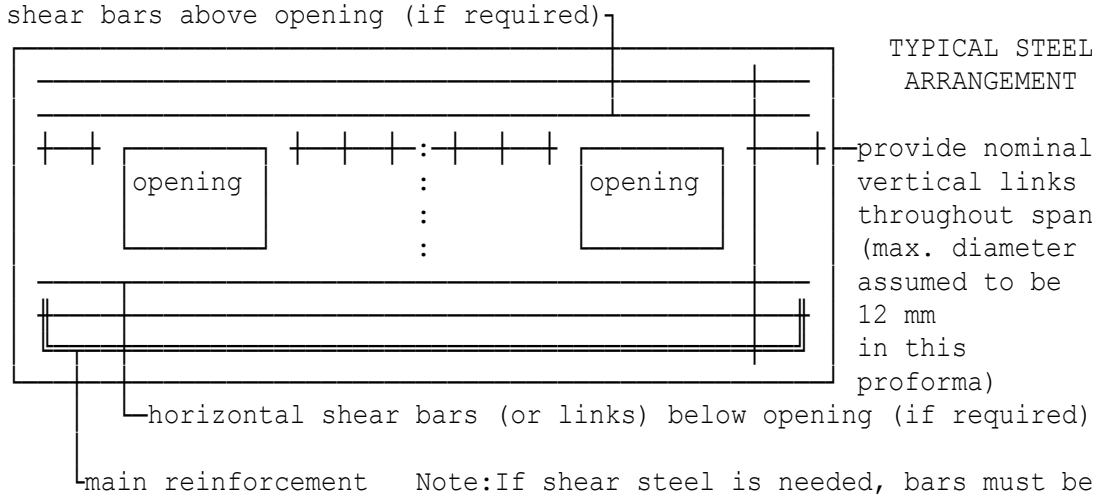

Note: If shear steel is needed, bars must be provided both above and below opening.

Diameter of main tension bars dia=25 mm
Number of main bars NumBar=13
Effective depth of main bars d=2425 mm

MAIN TENSION REINFORCEMENT SUMMARY	**Characteristic strength**	**425 N/mm²**
	Diameter of bars	**25 mm**
	Number of bars	**13**
	Area required	**6351.4 mm²**
	Area provided	**6381.4 mm²**
	Percentage provided	**0.42542 %**

Diameter of anti-cracking bars Ldia=16 mm

ANTI-CRACKING REINFORCEMENT SUMMARY	**Characteristic strength**	**425 N/mm²**
	Diameter of bars	**16 mm**
	Number of bars (each face)	**9**
	Spacing	**205 mm**

Location: Ex1 -Typical uniformly-loaded deep beam (NWC)

Design of deep beam using Kong simplified method

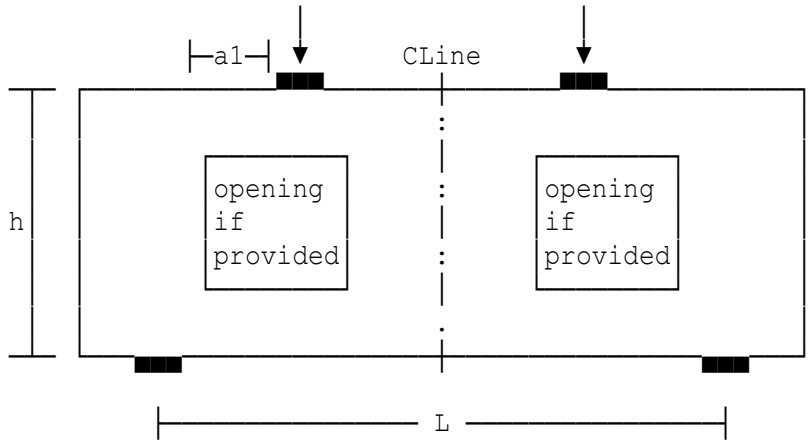

Span between centres of supports	L=3 m
Overall depth of beam	h=2 m
Breadth of beam	b=0.5 m
Partial safety factor for steel	gams=1.15
Partial safety factor for conc.	gamc=1.5
Design load per unit length	w=500 kN/m
Char yield strength of reinf'ment	fyk=500 N/mm²

From table of data given by Kong, Robins and Sharp, concrete cylinder splitting tensile strength Ft=2.74 N/mm²

Diameter of tension bars	diat=20 mm
Diameter of link legs	dial=12 mm

Main reinforcement

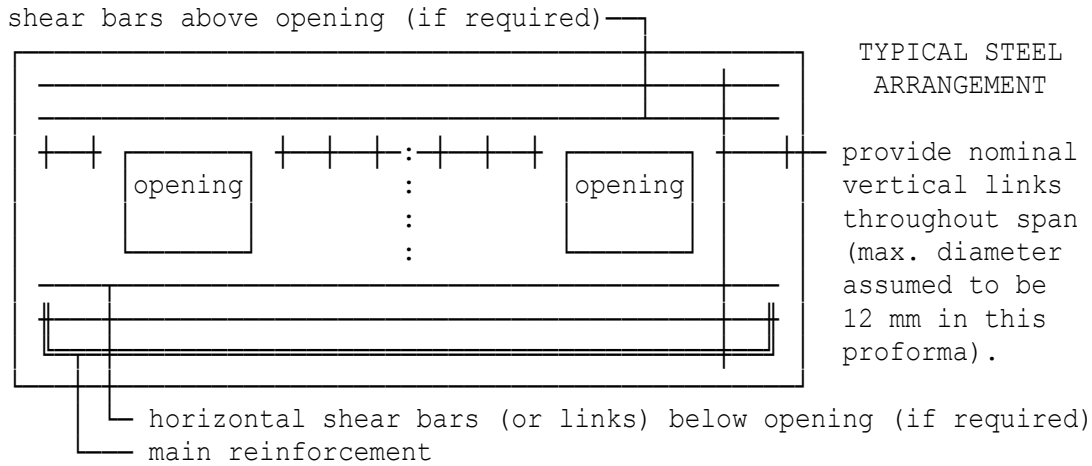

NOTE: If shear steel is needed, bars must be provided both above and below the openings as indicated in the above diagram.

Diameter of main tension bars	dia=20 mm
Number of main bars	NumBar=5

Effective depth of main bars d=1925 mm

MAIN TENSION REINFORCEMENT SUMMARY	**Characteristic strength**	**500 N/mm²**
	Diameter of bars	**20 mm**
	Number of bars	**5**
	Area required	**1500 mm²**
	Area provided	**1570.8 mm²**
	Percentage provided	**0.15708 %**

Shear reinforcement

From Table 148 in 'Reinforced Concrete Designer's Handbook' using formulae C and D, we get the following:
Shear resistance VRd=Vx1+Vx2=1964.5 kN
As VRd ≥ VEd (1964.5 kN ≥ 798.6 kN), the applied shear force is within the shear resistance from the main bars. Hence provide nominal shear reinforcement only.
Diameter of anti-cracking bars Ldia=12 mm

ANTI-CRACKING REINFORCEMENT SUMMARY	**Characteristic strength**	**500 N/mm²**
	Diameter of bars	**12 mm**
	No. of bars (each face)	**11**
	Spacing	**130 mm**

Location: Ex2 - Deep beam with two point loads (LWC)

Design of deep beam using Kong simplified method

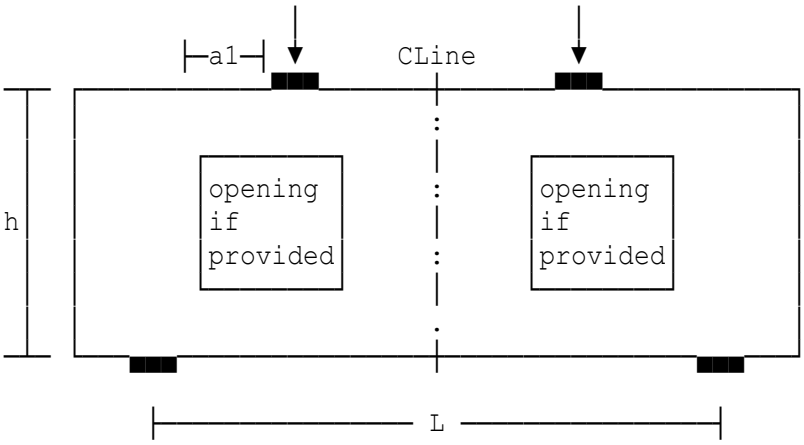

Span between centres of supports	L=5 m
Overall depth of beam	h=4 m
Breadth of beam	b=0.6 m
Partial safety factor for steel	gams=1.15
Partial safety factor for conc.	gamc=1.5

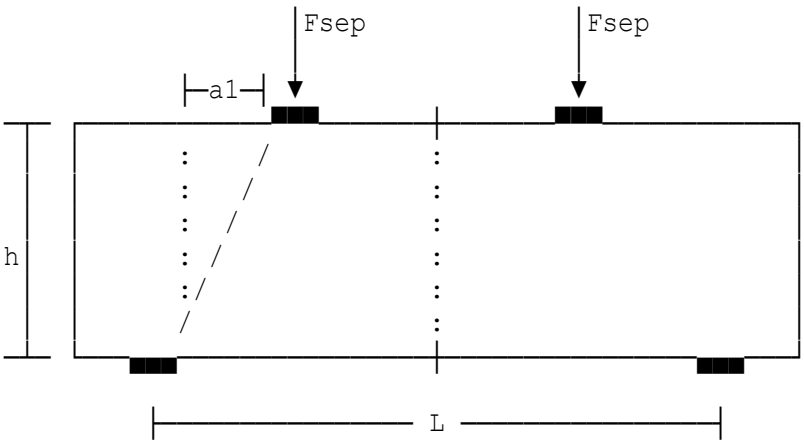

Factored point load	Fsep=750 kN
Distance to point load	a1=1.5 m

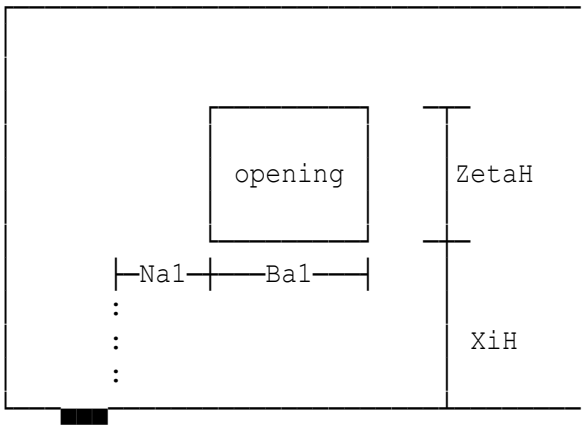

Support face to edge of opening	Na1=0.3 m
Width of opening	Ba1=0.3 m
Beam soffit to bottom of opening	XiH=1.6 m
Depth of opening	ZetaH=0.3 m
Char yield strength of reinf'ment	fyk=500 N/mm²
Cylinder splitting tensile strength of concrete	Ft=Ft=2.95 N/mm²
Diameter of tension bars	diat=20 mm
Diameter of link legs	dial=12 mm

Main reinforcement

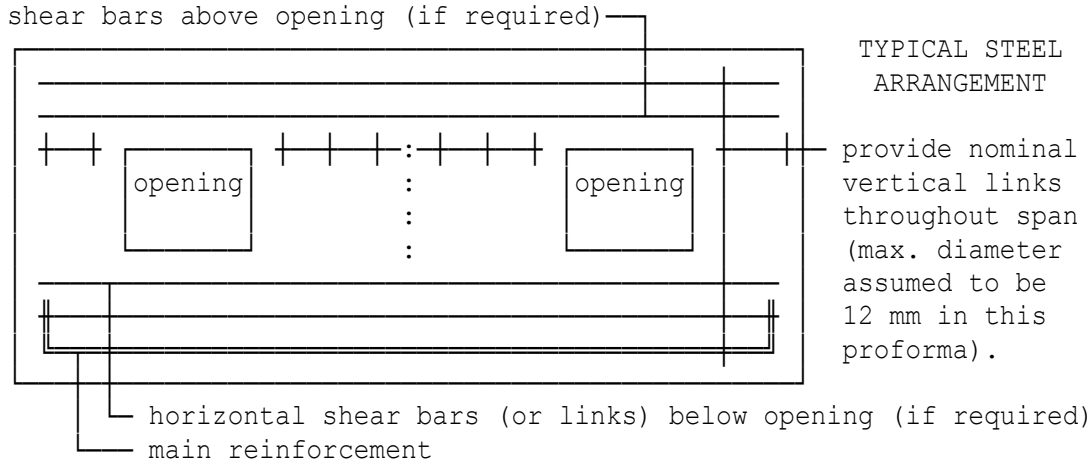

NOTE: If shear steel is needed, bars must be provided both above and below the openings as indicated in the above diagram.

Diameter of main tension bars	dia=16 mm
Number of main bars	NumBar=18
Effective depth of main bars	d=3890 mm

MAIN TENSION REINFORCEMENT SUMMARY	**Characteristic strength**	**500 N/mm²**
	Diameter of bars	**16 mm**
	Number of bars	**18**
	Area required	**3600 mm²**
	Area provided	**3619.1 mm²**
	Percentage provided	**0.1508 %**

Shear reinforcement

From Table 148 in 'Reinforced Concrete Designer's Handbook' using formulae C and D, we get the following:
Shear resistance VRd=Vx1+Vx2=1924.4 kN
As VRd ≥ VEd (1924.4 kN ≥ 750 kN), the applied shear force is within the shear resistance from the main bars. Hence provide nominal shear reinforcement only.
Diameter of anti-cracking bars Ldia=12 mm

ANTI-CRACKING REINFORCEMENT SUMMARY	**Characteristic strength**	**500 N/mm²**
	Diameter of bars	**12 mm**
	No. of bars (each face)	**20**
	Spacing	**140 mm**

WARNING:
Two different tension steel diameters have been used. Please rerun calculation using the same tension steel diameter.

Location: Ex3 - Deep beam with UDL and shear bars (NWC)

Design of deep beam using Kong simplified method

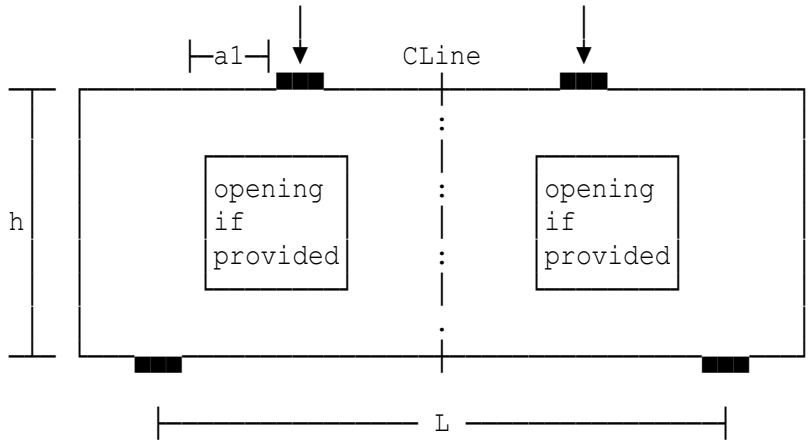

Span between centres of supports	L=3 m
Overall depth of beam	h=2 m
Breadth of beam	b=0.55 m
Partial safety factor for steel	gams=1.15
Partial safety factor for conc.	gamc=1.5
Design load per unit length	w=1800 kN/m
Char yield strength of reinf'ment	fyk=500 N/mm²

From table of data given by Kong, Robins and Sharp, concrete cylinder

splitting tensile strength	Ft=2.74 N/mm²
Diameter of tension bars	diat=25 mm
Diameter of link legs	dial=12 mm

Main reinforcement

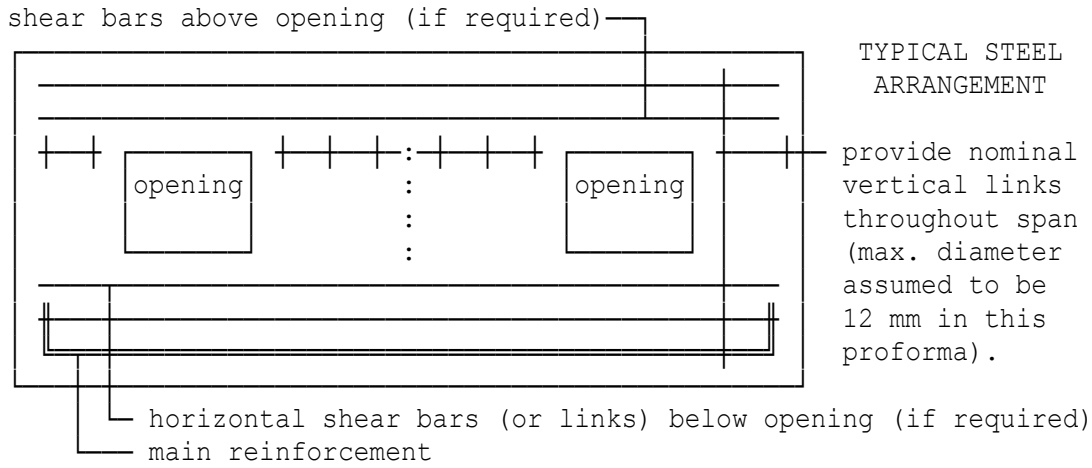

NOTE: If shear steel is needed, bars must be provided both above and below the openings as indicated in the above diagram.

Diameter of main tension bars	dia=25 mm
Number of main bars	NumBar=8

Effective depth of main bars d=1925 mm

MAIN TENSION REINFORCEMENT SUMMARY	**Characteristic strength**	**500 N/mm²**
	Diameter of bars	**25 mm**
	Number of bars	**8**
	Area required	**3923.7 mm²**
	Area provided	**3927 mm²**
	Percentage provided	**0.357 %**

Shear reinforcement

From Table 148 in 'Reinforced Concrete Designer's Handbook' using formulae C and D, we get the following:
Shear resistance VRd=Vx1+Vx2=2578.5 kN
As the applied shear force of 2753.5 kN exceeds the resistance provided by the main steel of 2578.5 kN extra web steel must be employed to resist the excess force of 174.98 kN.
Diameter of shear bars Ldia=12 mm

HORIZONTAL SHEAR REINFORCEMENT SUMMARY	**Characteristic strength**	**500 N/mm²**
	Diameter of bars	**12 mm**
	Number of bars (each face)	**8**
	Spacing	**230 mm**
	Resistance required	**174.98 kN**
	Resistance provided	**186.51 kN**

ANTI-CRACKING REINFORCEMENT SUMMARY	**Characteristic strength**	**500 N/mm²**
	Diameter of bars	**12 mm**
	No. of bars (each face)	**11**
	Spacing	**130 mm**

Location: Typical circular column, tensile and compressive stress

Modular-ratio theory: design of reinforcement for circular column

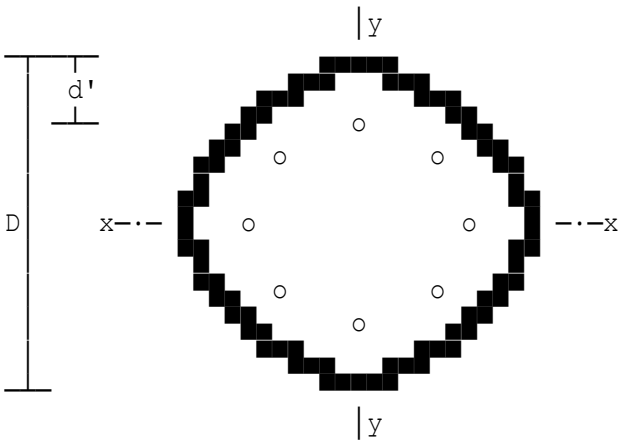

Calculations for reinforcement are in accordance with normal modular-ratio theory (i.e. an 'effective' modular ratio of (mr-1) is considered where the steel is in compression). Min.steel = six bars arranged symmetrically.

Modular ratio	mr=15
Diameter of column	D=600 mm
Depth to centre of steel	d'=56 mm
Axial load	N=1000 kN
Applied bending moment	M=250 kNm
Limiting concrete stress	fc=15 N/mm²
Limiting steel stress	fs=250 N/mm²
Main steel diameter	dia=12 mm
Number of bars to be provided	NumBar=37
Depth to neutral axis	316.65 mm
Maximum stress in concrete	14.99 N/mm² compression
Theoretical min.concrete stress	13.414 N/mm² tension
Max.stress in steel near top	185.09 N/mm² compression
Max.stress in steel near bottom	161.44 N/mm² tension

Axial-load and moment resistance of section as designed

```
Axial resistance due to concrete:
 Nc=f1/2*D*D/(1-COS(BE))*(SIN(BE)^3/3-BE/2*COS(BE)+COS(BE)*SIN(2*BE)
    /4)=968131 N
Axial resistance due to compression reinforcement:
 Ns1=f1*(mr-1)*R0/PI*AProv/(R-R0*COS(AL))*(SIN(AL)-AL*COS(AL))=239151 N
Axial resistance due to tension reinforcement:
 Ns2=f1*mr*R0/PI*AProv/(R-R0*COS(AL))*(SIN(AL)+(PI-AL)*COS(AL))=206717 N
Total axial resistance provided   Nres=(Nc+Ns1-Ns2)/1E3=1000.6 kN

Resistance moment due to concrete:
 Mc=f1/4*D^3/(1-COS(BE))*(BE/8-SIN(4*BE)/32-COS(BE)*SIN(BE)^3/3)
   =164.86E6 Nmm
Resistance moment due to compression reinforcement:
 Ms1=f1*(mr-1)*R0*R0/PI*AProv/(R-R0*COS(AL))*(AL/2-SIN(2*AL)/4)
    =44.892E6 Nmm
Resistance moment due to tension reinforcement:
 Ms2=f1*mr*R0*R0/PI*AProv/(R-R0*COS(AL))*(PI/2-AL/2+SIN(2*AL)/4)
    =40.413E6 Nmm
Total resistance moment provided  Mres=(Mc+Ms1+Ms2)/1E6=250.16 kNm
```

Location: Small-diameter circular column subjected to heavy load

Modular-ratio theory: design of reinforcement for circular column

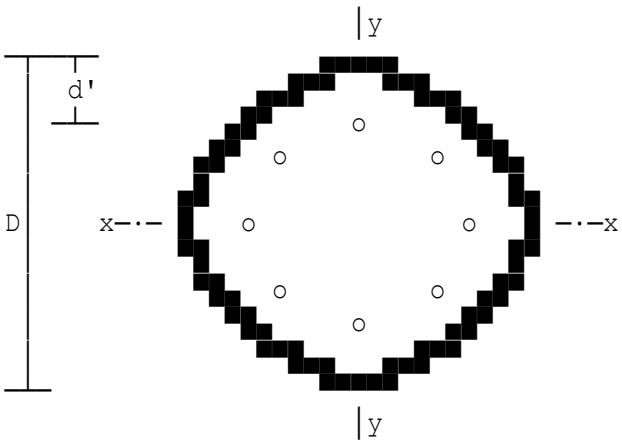

Calculations for reinforcement are in accordance with normal modular-ratio theory (i.e. an 'effective' modular ratio of (mr-1) is considered where the steel is in compression). Min.steel = six bars arranged symmetrically.

Modular ratio	mr=15
Diameter of column	D=300 mm
Depth to centre of steel	d'=48 mm
Axial load	N=375 kN
Applied bending moment	M=45 kNm
Limiting concrete stress	fc=15 N/mm²
Limiting steel stress	fs=250 N/mm²
Main steel diameter	dia=20 mm
Number of bars to be provided	NumBar=12
Depth to neutral axis	174.94 mm
Maximum stress in concrete	14.701 N/mm² compression
Theoretical min.concrete stress	10.51 N/mm² tension
Max.stress in steel near top	160.01 N/mm² compression
Max.stress in steel near bottom	97.141 N/mm² tension

Axial-load and moment resistance of section as designed

```
Axial resistance due to concrete:
 Nc=f1/2*D*D/(1-COS(BE))*(SIN(BE)^3/3-BE/2*COS(BE)+COS(BE)*SIN(2*BE)
    /4)=276479 N
Axial resistance due to compression reinforcement:
 Ns1=f1*(mr-1)*R0/PI*AProv/(R-R0*COS(AL))*(SIN(AL)-AL*COS(AL))=207774 N
Axial resistance due to tension reinforcement:
 Ns2=f1*mr*R0/PI*AProv/(R-R0*COS(AL))*(SIN(AL)+(PI-AL)*COS(AL))=101698 N
Total axial resistance provided   Nres=(Nc+Ns1-Ns2)/1E3=382.56 kN

Resistance moment due to concrete:
 Mc=f1/4*D^3/(1-COS(BE))*(BE/8-SIN(4*BE)/32-COS(BE)*SIN(BE)^3/3)
   =21.791E6 Nmm
Resistance moment due to compression reinforcement:
 Ms1=f1*(mr-1)*R0*R0/PI*AProv/(R-R0*COS(AL))*(AL/2-SIN(2*AL)/4)
    =15.398E6 Nmm
Resistance moment due to tension reinforcement:
 Ms2=f1*mr*R0*R0/PI*AProv/(R-R0*COS(AL))*(PI/2-AL/2+SIN(2*AL)/4)
    =8.7252E6 Nmm
Total resistance moment provided  Mres=(Mc+Ms1+Ms2)/1E6=45.915 kNm
```

Location: Massive lightly-loaded column reinforced with mild steel

Modular-ratio theory: design of reinforcement for circular column

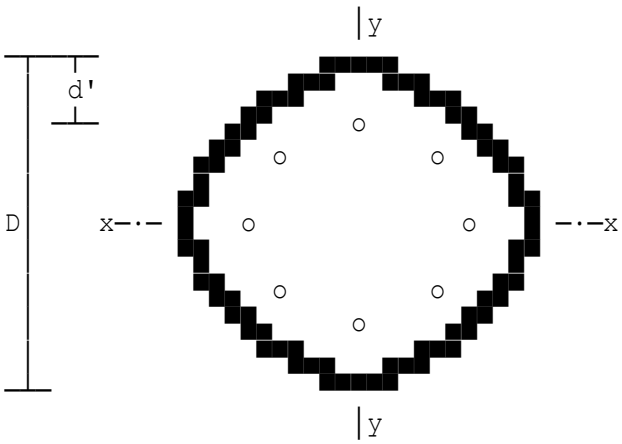

Calculations for reinforcement are in accordance with normal modular-ratio theory (i.e. an 'effective' modular ratio of (mr-1) is considered where the steel is in compression). Min.steel = six bars arranged symmetrically.

Modular ratio	mr=15
Diameter of column	D=1500 mm
Depth to centre of steel	d'=60 mm
Axial load	N=24000 kN
Applied bending moment	M=1000 kNm
Limiting concrete stress	fc=15 N/mm²
Limiting steel stress	fs=180 N/mm²
Main steel diameter	dia=16 mm
Number of bars to be provided	NumBar=60
Maximum stress in concrete	14.994 N/mm² compression
Minimum stress in concrete	9.7987 N/mm² compression
Max.stress in steel near top	221.8 N/mm² compression
Max.stress in steel near bottom	150.1 N/mm² compression

Location: Typical circular column, tensile and compressive stress

Modular-ratio theory: design of reinforcement for circular column

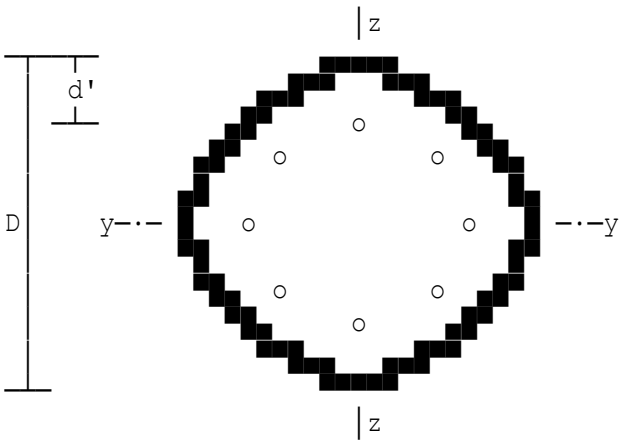

Calculations for reinforcement are in accordance with normal modular-ratio theory (i.e. an 'effective' modular ratio of (mr-1) is considered where the steel is in compression). Min.steel = six bars arranged symmetrically.

Diameter of column	D=600 mm
Depth to centre of steel	d'=56 mm
Design axial load	N=1000 kN
Design moment	M=250 kNm
Modular ratio	mr=15
Limiting concrete stress	fc=15 N/mm²
Limiting steel stress	fs=250 N/mm²
Characteristic steel strength	fyk=500 N/mm²
Main steel diameter	dia=12 mm
Number of bars to be provided	NumBar=37

Tension and compression developed across section

Depth to neutral axis	316.65 mm
Maximum stress in concrete	14.99 N/mm² compression
Theoretical min.concrete stress	13.414 N/mm² tension
Max.stress in steel near top	185.09 N/mm² compression
Max.stress in steel near bottom	161.44 N/mm² tension

Axial-load and moment resistance of section as designed

Axial resistance due to concrete:
Nc=f1/2*D*D/(1-COS(BE))*(SIN(BE)^3/3-BE/2*COS(BE)+COS(BE)*SIN(2*BE)/4)=968131 N
Axial resistance due to compression reinforcement:
Ns1=f1*(mr-1)*R0/PI*AProv/(R-R0*COS(AL))*(SIN(AL)-AL*COS(AL))=239151 N
Axial resistance due to tension reinforcement:
Ns2=f1*mr*R0/PI*AProv/(R-R0*COS(AL))*(SIN(AL)+(PI-AL)*COS(AL))=206717 N
Total axial resistance provided Nres=(Nc+Ns1-Ns2)/1E3=1000.6 kN

Resistance moment due to concrete:
Mc=f1/4*D^3/(1-COS(BE))*(BE/8-SIN(4*BE)/32-COS(BE)*SIN(BE)^3/3)
=164.86E6 Nmm
Resistance moment due to compression reinforcement:
Ms1=f1*(mr-1)*R0*R0/PI*AProv/(R-R0*COS(AL))*(AL/2-SIN(2*AL)/4)
=44.892E6 Nmm

Resistance moment due to tension reinforcement:
Ms2=f1*mr*R0*R0/PI*AProv/(R-R0*COS(AL))*(PI/2-AL/2+SIN(2*AL)/4)
=40.413E6 Nmm
Total resistance moment provided Mres=(Mc+Ms1+Ms2)/1E6=250.16 kNm

DESIGN	**Design axial load**	**1000 kN**
SUMMARY	**Axial resistance provided**	**1000.6 kN**
	Design moment	**250 kNm**
	Resistance moment provided	**250.16 kNm**

Location: Small-diameter circular column subjected to heavy load

Modular-ratio theory: design of reinforcement for circular column

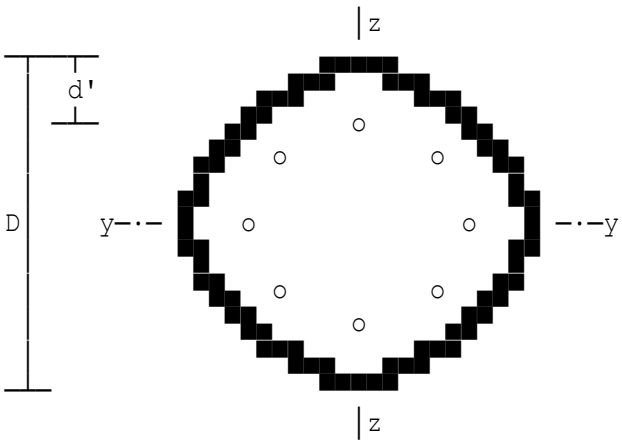

Calculations for reinforcement are in accordance with normal modular-ratio theory (i.e. an 'effective' modular ratio of (mr-1) is considered where the steel is in compression). Min.steel = six bars arranged symmetrically.

Diameter of column	D=300 mm
Depth to centre of steel	d'=48 mm
Design axial load	N=375 kN
Design moment	M=45 kNm
Modular ratio	mr=15
Limiting concrete stress	fc=15 N/mm²
Limiting steel stress	fs=250 N/mm²
Characteristic steel strength	fyk=500 N/mm²
Main steel diameter	dia=20 mm
Number of bars to be provided	NumBar=12

Tension and compression developed across section

Depth to neutral axis	174.94 mm
Maximum stress in concrete	14.701 N/mm² compression
Theoretical min.concrete stress	10.51 N/mm² tension
Max.stress in steel near top	160.01 N/mm² compression
Max.stress in steel near bottom	97.141 N/mm² tension

Axial-load and moment resistance of section as designed

Axial resistance due to concrete:
Nc=f1/2*D*D/(1-COS(BE))*(SIN(BE)^3/3-BE/2*COS(BE)+COS(BE)*SIN(2*BE)/4)=276479 N
Axial resistance due to compression reinforcement:
Ns1=f1*(mr-1)*R0/PI*AProv/(R-R0*COS(AL))*(SIN(AL)-AL*COS(AL))=207774 N
Axial resistance due to tension reinforcement:
Ns2=f1*mr*R0/PI*AProv/(R-R0*COS(AL))*(SIN(AL)+(PI-AL)*COS(AL))=101698 N
Total axial resistance provided Nres=(Nc+Ns1-Ns2)/1E3=382.56 kN

Resistance moment due to concrete:
Mc=f1/4*D^3/(1-COS(BE))*(BE/8-SIN(4*BE)/32-COS(BE)*SIN(BE)^3/3)
=21.791E6 Nmm
Resistance moment due to compression reinforcement:
Ms1=f1*(mr-1)*R0*R0/PI*AProv/(R-R0*COS(AL))*(AL/2-SIN(2*AL)/4)
=15.398E6 Nmm

Resistance moment due to tension reinforcement:
Ms2=f1*mr*R0*R0/PI*AProv/(R-R0*COS(AL))*(PI/2-AL/2+SIN(2*AL)/4)
=8.7252E6 Nmm
Total resistance moment provided Mres=(Mc+Ms1+Ms2)/1E6=45.915 kNm

DESIGN	**Design axial load**	**375 kN**
SUMMARY	**Axial resistance provided**	**382.56 kN**
	Design moment	**45 kNm**
	Resistance moment provided	**45.915 kNm**

NOTE: The percentage of steel provided is 5.33 % which exceeds the 4% maximum limit. However this is acceptable provided that the concrete can be placed and compacted sufficiently.

Location: Massive lightly-loaded column reinforced with mild steel

Modular-ratio theory: design of reinforcement for circular column

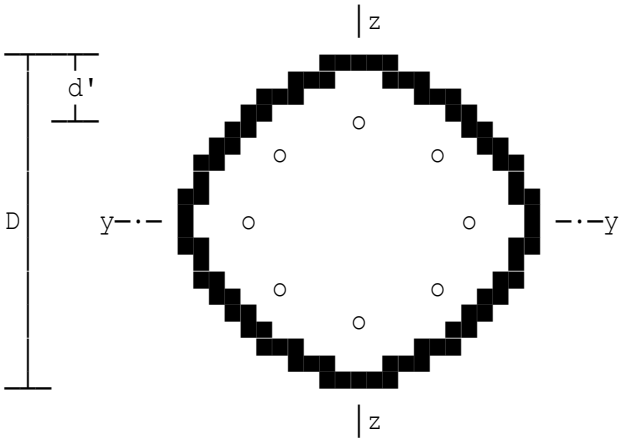

Calculations for reinforcement are in accordance with normal modular-ratio theory (i.e. an 'effective' modular ratio of (mr-1) is considered where the steel is in compression). Min.steel = six bars arranged symmetrically.

Diameter of column	D=1500 mm
Depth to centre of steel	d'=60 mm
Design axial load	N=24000 kN
Design moment	M=1000 kNm
Modular ratio	mr=15
Limiting concrete stress	fc=15 N/mm²
Limiting steel stress	fs=180 N/mm²
Characteristic steel strength	fyk=500 N/mm²
Main steel diameter	dia=16 mm
Number of bars to be provided	NumBar=60

Compression developed throughout section

Maximum stress in concrete	14.994 N/mm² compression
Minimum stress in concrete	9.7987 N/mm² compression
Max.stress in steel near top	221.8 N/mm² compression
Max.stress in steel near bottom	150.1 N/mm² compression

Modular-ratio theory: calculation of stresses in circular column

Location: Typical circular column

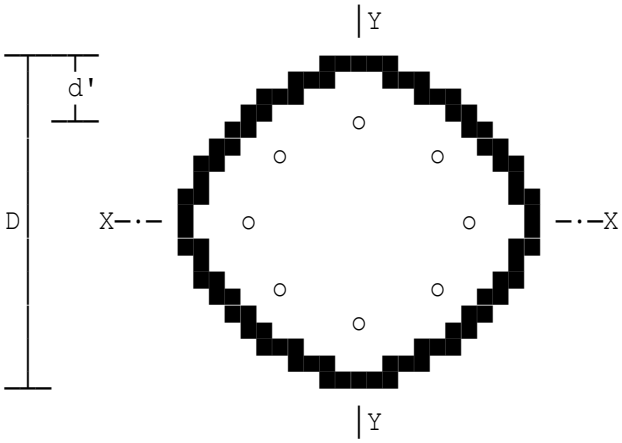

Calculations of stresses is in accordance with normal modular-ratio theory (i.e. an 'effective' modular ratio of (mr-1) is considered where the steel is in compression). Min.steel = six bars arranged symmetrically.

Modular ratio	mr=15
Diameter of column	D=600 mm
Depth to centre of steel	d'=56 mm
Axial load	N=1000 kN
Applied bending moment	M=200 kNm

Tension and compression developed across section

Depth to neutral axis	324.35 mm
Maximum stress in concrete	14.651 N/mm² compression
Theoretical min.concrete stress	12.451 N/mm² tension
Max.stress in steel near bottom	148.82 N/mm² tension
Max.stress in steel near top	181.82 N/mm² compression

Modular-ratio theory: calculation of stresses in circular column

Location: Circular column subjected to compression throughout

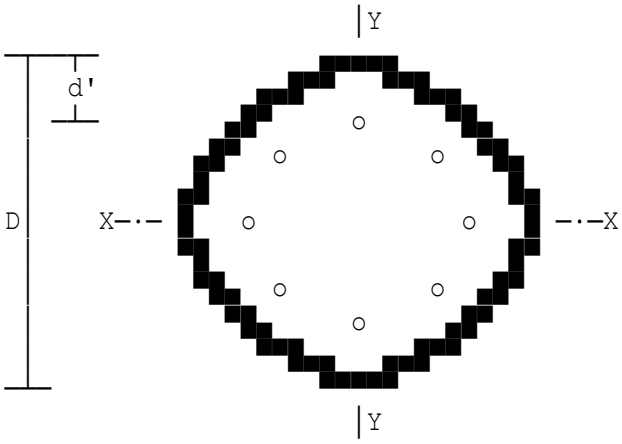

Calculations of stresses is in accordance with normal modular-ratio theory (i.e. an 'effective' modular ratio of (mr-1) is considered where the steel is in compression). Min.steel = six bars arranged symmetrically.

Modular ratio	mr=15
Diameter of column	D=600 mm
Depth to centre of steel	d'=56 mm
Axial load	N=1000 kN
Applied bending moment	M=50 kNm

Compression developed throughout section

Maximum stress in concrete	5.3336 N/mm² compression
Minimum stress in concrete	1.1362 N/mm² compression
Maximum stress in reinforcement	74.127 N/mm² compression
Minimum stress in reinforcement	22.919 N/mm² compression

Modular-ratio theory: calculation of stresses in circular column

Location: Circular column subjected to tension throughout

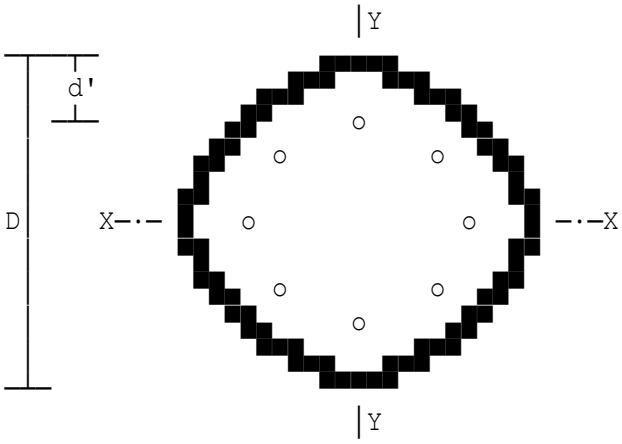

Calculations of stresses is in accordance with normal modular-ratio theory (i.e. an 'effective' modular ratio of (mr-1) is considered where the steel is in compression). Min.steel = six bars arranged symmetrically.

Modular ratio	mr=15
Diameter of column	D=600 mm
Depth to centre of steel	d'=56 mm
Axial load	N=-1000 kN
Applied bending moment	M=50 kNm

Tension developed throughout section

Theoretical max.concrete stress	13.456 N/mm² tension
Theoretical min.concrete stress	57.278 N/mm² tension
Max.stress in steel near top	263.18 N/mm² tension
Max.stress in steel near bottom	797.82 N/mm² tension

Location: Typical circular column

Modular-ratio theory: calculation of stresses in circular column

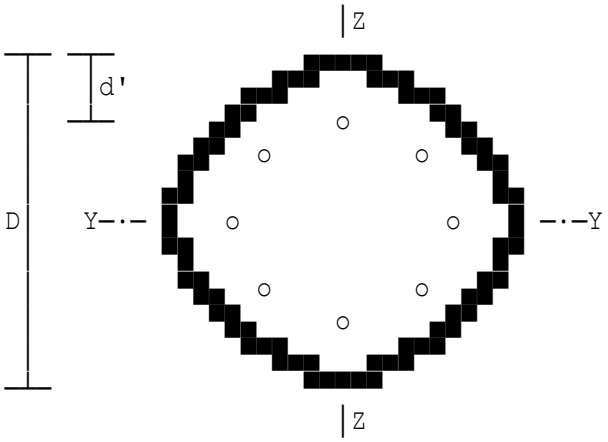

Calculations of stresses is in accordance with normal modular-ratio theory (i.e. an 'effective' modular ratio of (mr-1) is considered where the steel is in compression). Min.steel = six bars arranged symmetrically.

Diameter of column	D=600 mm
Depth to centre of steel	d'=56 mm
Design axial load	N=1000 kN
Design moment (positive)	M=200 kNm
Modular ratio	mr=15
Characteristic steel strength	fyk=500 N/mm²

Tension and compression developed across section

Depth to neutral axis	324.35 mm
Maximum stress in concrete	14.651 N/mm² compression
Theoretical min.concrete stress	12.451 N/mm² tension
Max.stress in steel near bottom	148.82 N/mm² tension
Max.stress in steel near top	181.82 N/mm² compression

Location: Circular column subjected to compression throughout

Modular-ratio theory: calculation of stresses in circular column

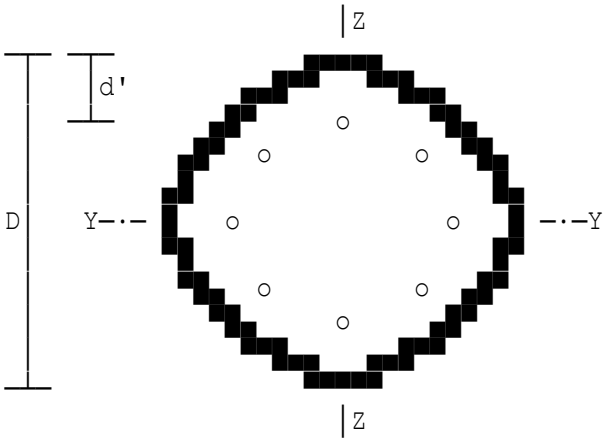

Calculations of stresses is in accordance with normal modular-ratio theory (i.e. an 'effective' modular ratio of (mr-1) is considered where the steel is in compression). Min.steel = six bars arranged symmetrically.

Diameter of column	D=600 mm
Depth to centre of steel	d'=56 mm
Design axial load	N=1000 kN
Design moment (positive)	M=50 kNm
Modular ratio	mr=15
Characteristic steel strength	fyk=500 N/mm²

Compression developed throughout section

Maximum stress in concrete	5.3336 N/mm² compression
Minimum stress in concrete	1.1362 N/mm² compression
Maximum stress in reinforcement	74.127 N/mm² compression
Minimum stress in reinforcement	22.919 N/mm² compression

Location: Circular column subjected to tension throughout

Modular-ratio theory: calculation of stresses in circular column

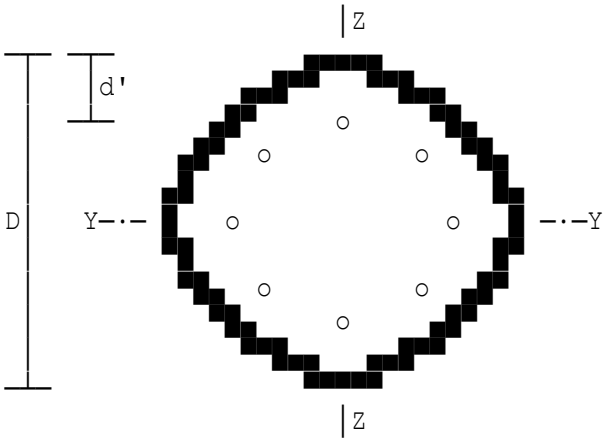

Calculations of stresses is in accordance with normal modular-ratio theory (i.e. an 'effective' modular ratio of (mr-1) is considered where the steel is in compression). Min.steel = six bars arranged symmetrically.

Diameter of column	D=600 mm
Depth to centre of steel	d'=56 mm
Design axial load	N=-1000 kN
Design moment (positive)	M=50 kNm
Modular ratio	mr=15
Characteristic steel strength	fyk=500 N/mm²

Tension developed throughout section

Theoretical max.concrete stress	13.456 N/mm² tension
Theoretical min.concrete stress	57.278 N/mm² tension
Max.stress in steel near top	263.18 N/mm² tension
Max.stress in steel near bottom	797.82 N/mm² tension

Location: Ex1 - Staircase between Beams C1-C2 and D1-D2

Design to BS8110(1997) with partial safety factor for steel gammaS=1.15

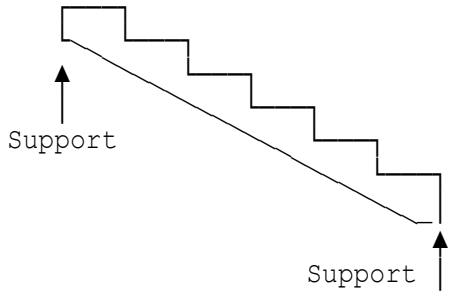

Reinforced concrete staircase spanning between supports at the end of the flight. No landings. Design in accordance with BS 8110:Part 1 "Structural use of concrete".

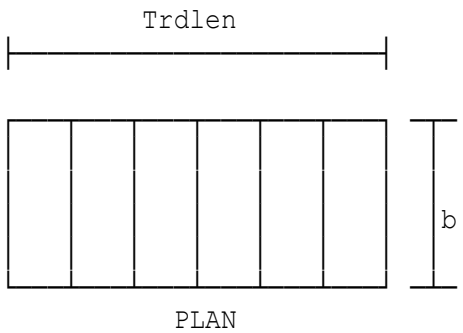

Number of treads	TrdNo=10
Total length of treads on flight	Trdlen=2500 mm
Finished riser height	frish=165 mm
Staircase waist thickness	h=200 mm
Staircase flight width	b=1100 mm
Depth of finish on tread	ftrd=25 mm
Depth of finish on riser	fris=15 mm
Depth of finish on flight soffit	fsoft'=0 mm
Density of concrete	Gamcon=24 kN/m³
Density of finishes	Gamfin=24 kN/m³
Imposed load	qk=5 kN/m²

Simply supported rectangular reinforced concrete staircase

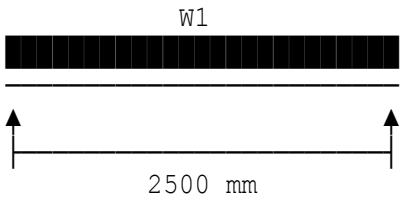

Load	Gk kN/m	Qk kN/m
W1	9.4257	5.5

Maximum span bending moment 17.184 kNm

End shears

Shear force at left hand end	27.495 kN
Shear force at right hand end	27.495 kN
Unfactored dead shear at LHE	11.782 kN
Unfactored imposed shear at LHE	6.875 kN
Unfactored dead shear at RHE	11.782 kN
Unfactored imposed shear at RHE	6.875 kN

Characteristic concrete strength fcu=25 N/mm²
Characteristic steel strength fy=250 N/mm²
Mild steel reinforcement.
Diameter of tension bars dia=20 mm
Designated exposure class is XC1
Specified fixing tolerance tol=10 mm
Nominal concrete cover cover=25 mm
Effective depth of section d=155 mm
Chosen spacing of tension bars pchTA=320 mm

Diameter of distribution bars diamn=12 mm
Spacing of distribution bars pchDA=220 mm

TENSION REINFORCEMENT SUMMARY	**Characteristic strength**	**250 N/mm²**
	Diameter of bars	**20 mm**
	Number of bars	**4**
	Spacing of bars	**320 mm**
	Effective depth	**155 mm**
	Area of steel required	**536.83 mm²**
	Area of steel provided	**1256 mm²**
	Percentage provided	**0.57091 %**
	Weight of steel provided	**9.8596 kg/m**
DISTRIBUTION REINFORCEMENT SUMMARY	**Characteristic strength**	**250 N/mm²**
	Diameter of bars	**12 mm**
	Spacing of bars	**220 mm**
	Depth to bar centres	**139 mm**
	Area of steel required	**480 mm²/m**
	Area of steel provided	**514 mm²/m**
	Percentage provided	**0.257 %**
	Weight of steel provided	**4.0349 kg/m**

Check on span/effective-depth ratio

The staircase is assumed to be a simply-supported slab.
Basic ratio for simp.-sup.slab bs'd=20 (see Table 3.9)
From Table 3.10 of Code, with fs=71.235 N/mm² and M/bd2=0.65025
Mod.factor for tension steel modf1=2
Maximum permissible
span/effective-depth ratio ps'd=bs'd*modf1=40
Actual span/effective-depth ratio as'd=1000*span/d=16.129
Since this does not exceed 46, this is Acceptable.

Shear in longitudinal zone of solid slab of given width

Since distance from support varies throughout zone considered, enhancement of shear resistance due to proximity to support is not applicable.

The calculations for shear in the zone of solid slab are in accordance with Clauses 3.5.5 of BS8110 throughout.

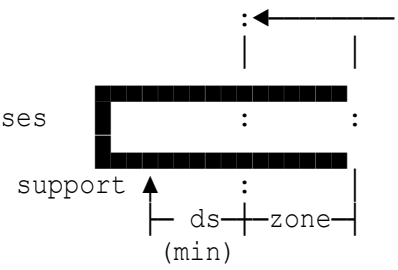

In the case of a uniform load, the design section to be considered need not be less than a minimum distance from support equal to effective depth.

Dia of tension bars @ shear sect dias=16
No of tension bars @ shear sect nbars=4

Effective depth of section ds=157 mm

Since design shear stress of 0.15921 N/mm² is less than critical shear stress of 0.62089 N/mm², no special shear reinforcement is required.

Location: Ex2 - Type 1 Stair

Design to BS8110(1997) with partial safety factor for steel gammaS=1.15

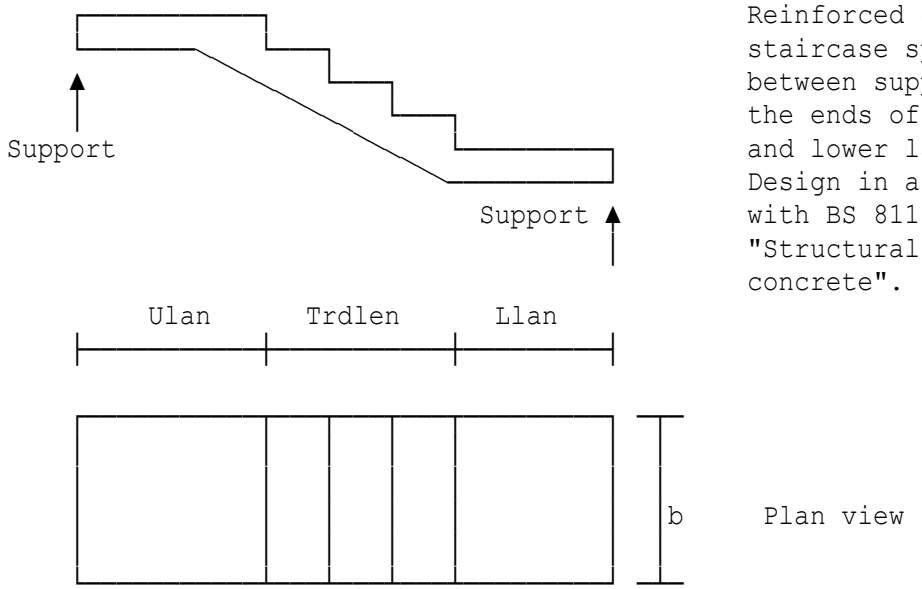

Reinforced concrete staircase spanning between supports at the ends of the upper and lower landings. Design in accordance with BS 8110:Part 1 "Structural use of concrete".

Number of treads	TrdNo=12
Total length of treads on flight	Trdlen=2500 mm
Finished riser height	frish=175 mm
Staircase waist thickness	h=250 mm
Staircase flight width	b=1100 mm
Depth of finish on tread	ftrd=25 mm
Depth of finish on riser	fris=15 mm
Depth of finish on flight soffit	fsoft'=10 mm
Upper landing length	Ulan=1200 mm
Upper landing thickness	Ulthk=200 mm
Depth of finish on upper landing	fupp=25 mm
Depth upper landing soffit finish	supp=10 mm
Lower landing length	Llan=1200 mm
Lower landing thickness	Llthk=200 mm
Depth of finish on lower landing	flow=25 mm
Depth lower landing soffit finish	slow=10 mm
Density of concrete	Gamcon=24 kN/m³
Density of finishes	Gamfin=24 kN/m³
Density of soffit finishes	Gamsfin=20 kN/m³
Imposed load	qk=5 kN/m²

Simply supported rectangular reinforced concrete staircase

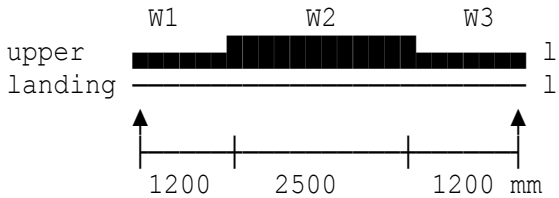

Load	Gk kN/m	Qk kN/m
W1	6.204	5.5
W2	12.209	5.5
W3	6.204	5.5

Maximum span bending moment 71.657 kNm

End shears

Shear force at left hand end 53.348 kN
Shear force at right hand end 53.348 kN
Unfactored dead shear at LHE 22.706 kN
Unfactored imposed shear at LHE 13.475 kN
Unfactored dead shear at RHE 22.706 kN
Unfactored imposed shear at RHE 13.475 kN

Characteristic concrete strength fcu=30 N/mm²
Characteristic steel strength fy=500 N/mm²
High-yield steel reinforcement.
Diameter of tension bars dia=20 mm
Designated exposure class is XC1
Specified fixing tolerance tol=10 mm
Nominal concrete cover cover=35 mm
Effective depth of section d=205 mm
Chosen spacing of tension bars pchTA=320 mm

Diameter of distribution bars diamn=12 mm
Spacing of distribution bars pchDA=340 mm

TENSION REINFORCEMENT SUMMARY	**Characteristic strength**	**500 N/mm²**
	Diameter of bars	**20 mm**
	Number of bars	**4**
	Spacing of bars	**320 mm**
	Effective depth	**205 mm**
	Area of steel required	**856.32 mm²**
	Area of steel provided	**1256 mm²**
	Percentage provided	**0.45673 %**
	Weight of steel provided	**9.8596 kg/m**
DISTRIBUTION REINFORCEMENT SUMMARY	**Characteristic strength**	**500 N/mm²**
	Diameter of bars	**12 mm**
	Spacing of bars	**340 mm**
	Depth to bar centres	**189 mm**
	Area of steel required	**325 mm²/m**
	Area of steel provided	**332 mm²/m**
	Percentage provided	**0.1328 %**
	Weight of steel provided	**2.6062 kg/m**

Check on span/effective-depth ratio

The staircase is assumed to be a simply-supported slab.
Basic ratio for simp.-sup.slab bs'd=20 (see Table 3.9)
From Table 3.10 of Code, with fs=227.26 N/mm² and M/bd2=1.5501
Mod.factor for tension steel modf1=1.4024
Maximum permissible
span/effective-depth ratio ps'd=bs'd*modf1=28.047
Actual span/effective-depth ratio as'd=1000*span/d=23.902
Since this does not exceed 28.047, this is Acceptable.

Shear in longitudinal zone of solid slab of given width

Since distance from support varies throughout zone considered, enhancement of shear resistance due to proximity to support is not applicable.

The calculations for shear in the zone of solid slab are in accordance with Clauses 3.5.5 of BS8110 throughout.

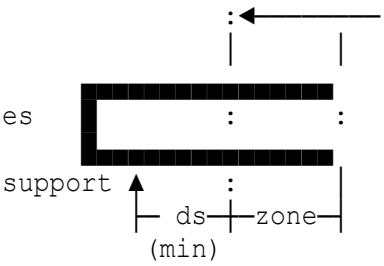

In the case of a uniform load, the design section to be considered need not be less than a minimum distance from support equal to effective depth.

Dia of tension bars @ shear sect dias=16
No of tension bars @ shear sect nbars=4

Effective depth of section ds=157 mm

Since design shear stress of 0.30891 N/mm² is less than critical shear stress of 0.61525 N/mm², no special shear reinforcement is required.

Location: Ex3 - Type 6 Stair

Design to BS8110(1997) with partial safety factor for steel gammaS=1.15

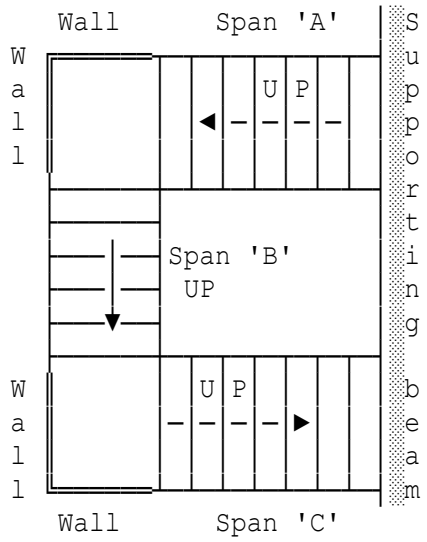

Open well staircase supported on structure at floor level. Each half landing supported by walls on two sides.

Stair flight designed in accordance with BS8110:Part 1 with 1993 amendments. "Structural use of concrete"

Number of treads	TrdNo=8
Total length of treads on flight	Trdlen=2000 mm
Finished riser height	frish=170 mm
Staircase waist thickness	h=200 mm
Staircase flight width	b=1200 mm
Depth of finish on tread	ftrd=20 mm
Depth of finish on riser	fris=20 mm
Depth of finish on flight soffit	fsoft'=10 mm
Lower landing length	Llan=1250 mm
Lower landing thickness	Llthk=250 mm
Depth of finish on lower landing	flow=20 mm
Depth lower landing soffit finish	slow=10 mm
Upper landing length	Ulan=1250 mm
Upper landing thickness	Ulthk=250 mm
Depth of finish on upper landing	fupp=20 mm
Depth upper landing soffit finish	supp=10 mm
Density of concrete	Gamcon=24 kN/m³
Density of finishes	Gamfin=24 kN/m³
Density of soffit finishes	Gamsfin=20 kN/m³
Imposed load	qk=4 kN/m²

Simply supported rectangular reinforced concrete staircase

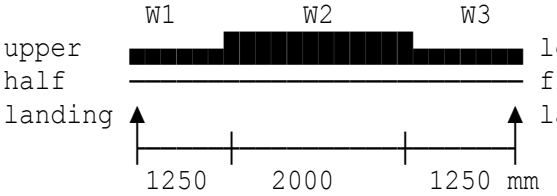

	Load	Gk kN/m	Qk kN/m
lower	W1	4.032	2.4
floor	W2	10.671	4.8
landing	W3	8.064	4.8

Maximum span bending moment 50.699 kNm

End shears

Shear force at left hand end 36.122 kN
Shear force at right hand end 44.685 kN
Unfactored dead shear at LHE 16.411 kN
Unfactored imposed shear at LHE 8.2167 kN
Unfactored dead shear at RHE 20.051 kN
Unfactored imposed shear at RHE 10.383 kN

Characteristic concrete strength fcu=30 N/mm²
Characteristic steel strength fy=500 N/mm²
High-yield steel reinforcement.
Diameter of tension bars dia=20 mm
Nominal concrete cover cover=25 mm
Effective depth of section d=165 mm
Chosen spacing of tension bars pchTA=375 mm

Diameter of distribution bars diamn=12 mm
Spacing of distribution bars pchDA=400 mm

TENSION REINFORCEMENT SUMMARY	**Characteristic strength**	**500 N/mm²**
	Diameter of bars	**20 mm**
	Number of bars	**4**
	Spacing of bars	**375 mm**
	Effective depth	**165 mm**
	Area of steel required	**752.8 mm²**
	Area of steel provided	**1256 mm²**
	Percentage provided	**0.52333 %**
	Weight of steel provided	**9.8596 kg/m**
DISTRIBUTION REINFORCEMENT SUMMARY	**Characteristic strength**	**500 N/mm²**
	Diameter of bars	**12 mm**
	Spacing of bars	**400 mm**
	Depth to bar centres	**149 mm**
	Area of steel required	**260 mm²/m**
	Area of steel provided	**282 mm²/m**
	Percentage provided	**0.141 %**
	Weight of steel provided	**2.2137 kg/m**

Check on span/effective-depth ratio

The staircase is assumed to be a simply-supported slab.
Basic ratio for simp.-sup.slab bs'd=20 (see Table 3.9)
From Table 3.10 of Code, with fs=199.79 N/mm² and M/bd2=1.5519
Mod.factor for tension steel modf1=1.4941
Maximum permissible
span/effective-depth ratio ps'd=bs'd*modf1=29.882
Actual span/effective-depth ratio as'd=1000*span/d=27.273
Since this does not exceed 29.882, this is Acceptable.

Shear in longitudinal zone of solid slab of given width

Since distance from support varies throughout zone considered, enhancement of shear resistance due to proximity to support is not applicable.

The calculations for shear in the zone of solid slab are in accordance with Clauses 3.5.5 of BS8110 throughout.

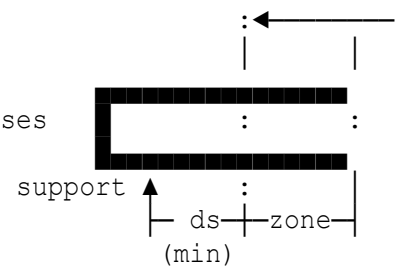

In the case of a uniform load, the design section to be considered need not be less than a minimum distance from support equal to effective depth.

Dia of tension bars @ shear sect dias=16
No of tension bars @ shear sect nbars=4

Effective depth of section ds=217 mm

Since design shear stress of 0.13872 N/mm² is less than critical shear stress of 0.56646 N/mm², no special shear reinforcement is required.

Location: Ex1 - Staircase between Beams C1-C2 and D1-D2

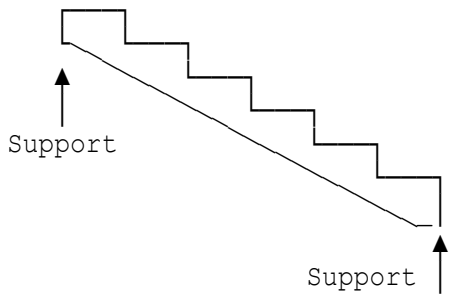

Reinforced concrete staircase spanning between supports at the end of the flight.
No landings.
Design in accordance with EC2:Part 1.

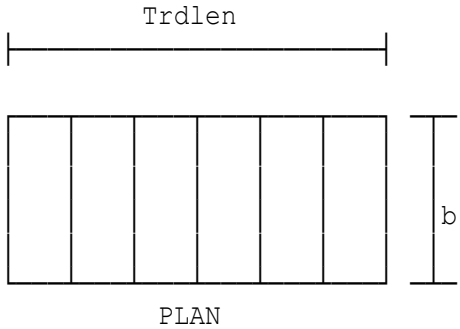

Number of treads	TrdNo=10
Total length of treads on flight	Trdlen=2500 mm
Finished riser height	frish=165 mm
Staircase waist thickness	h=200 mm
Staircase flight width	b=1100 mm
Depth of finish on tread	ftrd=25 mm
Depth of finish on riser	fris=15 mm
Depth of finish on flight soffit	fsoft'=0 mm
Density of concrete	Gamcon=25 kN/m³
Density of finishes	Gamfin=24 kN/m³
Variable load	qk=5 kN/m²

Simply supported rectangular reinforced concrete staircase

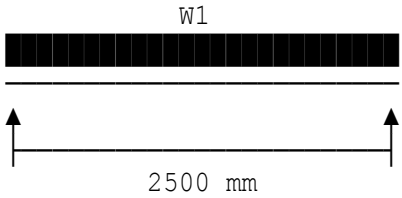

Load	Gk kN/m	Qk kN/m
W1	9.78	5.5

Permanent load factor	gamG=1.25
Variable load factor	gamQ=1.5

Maximum span bending moment M=15.996 kNm (ultimate)

End shears

Shear force at left hand end	25.594 kN (ultimate)
Shear force at right hand end	25.594 kN (ultimate)
Unfactored permanent shear at LHE	12.225 kN
Unfactored variable shear at LHE	6.875 kN
Unfactored permanent shear at RHE	12.225 kN

Unfactored variable shear at RHE 6.875 kN

High-yield steel reinforcement.
Diameter of tension bars dia=12 mm
Effective depth of section d=159 mm

DESIGN	**Overall depth**	**200 mm**
SUMMARY	**Effective depth**	**159 mm**
FLEXURE	**Parameter K**	**0.023**
	Parameter K'	**0.1684**
	Lever arm ratio z/d	**0.95**
TENSION REINFORCEMENT	**Steel area required**	**243.6 mm²**
	Steel area provided	**565.5 mm²**
	Diameter of bars	**12 mm**
	Number of bars	**5**
	Steel percentage	**0.1393 %**
	Minimum area of steel	**233.3 mm²**
	Maximum area of steel	**8800 mm²**
	Distribution steel	**233.3 mm²**
TENSION	**Characteristic strength**	**500 N/mm²**
REINFORCEMENT	**Diameter of bars**	**12 mm**
SUMMARY	**Number of bars**	**5**
	Spacing of bars	**255 mm**
	Effective depth	**159 mm**
	Area of steel required	**243.6 mm²**
	Area of steel provided	**565.5 mm²**
	Percentage provided	**0.257 %**
DISTRIBUTION	**Characteristic strength**	**500 N/mm²**
REINFORCEMENT	**Max spacing of bars**	**400 mm**
SUMMARY	**Min area required**	**233 mm²**

Deflection check

Actual span to depth ratio l'd=L*1000/d=15.72
Allowable span/depth ratio l'da=k*N*F1*F2*F3=157
Absolute value of span/depth l'da=40*k=40

DESIGN	**Actual l/d ratio**	**15.72**
SUMMARY	**Basic l/d ratio**	**104.6**
DEFLECTION	**Span factor**	**1**
	Flange beam factor F1	**1**
	Long spans factor F2	**1**
	Steel stress factor F3	**1.5**
	Allowable l/d ratio	**46**

NOTE: Care should be taken with the EC2 values as the deflection equations used give unrealistically high values. National Annex to EC2 Part 1:2004, Table NA.5 gives span/effective depth ratios for lightly stressed concrete (C30/37 & ρ=0.5%) as follows:

Simply supported spans	**23**
Continuous spans	**30**

Shear in longitudinal zone of solid slab of given width

Location for shear calculation:	Stair 22
Shear force due to ultimate load	VEd=25.59 kN
Term for shear resistance	vRdc=(rho1*fck)^(1/3)=1.593
Shear resistance	VRdc=CRdc*ks*vRdc*bw*d/1000=66.86 kN
Minimum stress	vmin=0.035*ks^1.5*fck^0.5=0.495 N/mm²
Minimum shear resistance	VRdm=vmin*bw*d/1000=86.57 kN
Modified shear resistance	VRdc=VRdm=86.57 kN

SHEAR SUMMARY	**Design shear force**	**25.59 kN**
	Design shear resistance	**86.57 kN**

Location: Ex2 - Type 1 Stair

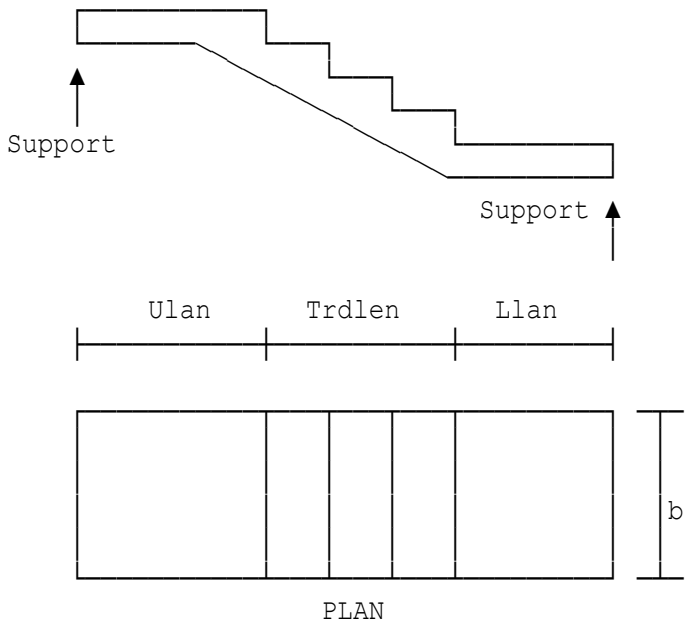

Reinforced concrete staircase spanning between supports at the ends of the upper and lower landings. Design in accordance with EC2:Part 1.

Number of treads	TrdNo=12
Total length of treads on flight	Trdlen=2500 mm
Finished riser height	frish=175 mm
Staircase waist thickness	h=250 mm
Staircase flight width	b=1100 mm
Depth of finish on tread	ftrd=25 mm
Depth of finish on riser	fris=15 mm
Depth of finish on flight soffit	fsoft'=10 mm
Upper landing length	Ulan=1200 mm
Upper landing thickness	Ulthk=200 mm
Depth of finish on upper landing	fupp=25 mm
Depth upper landing soffit finish	supp=10 mm
Lower landing length	Llan=1200 mm
Lower landing thickness	Llthk=200 mm
Depth of finish on lower landing	flow=25 mm
Depth lower landing soffit finish	slow=10 mm
Density of concrete	Gamcon=25 kN/m³
Density of finishes	Gamfin=24 kN/m³
Density of soffit finishes	Gamsfin=20 kN/m³
Variable load	qk=5 kN/m²

Simply supported rectangular reinforced concrete staircase

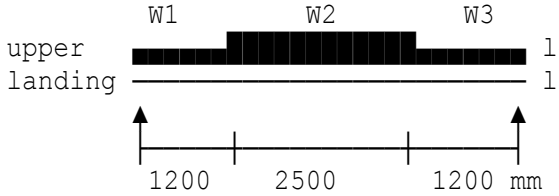

Load	Gk kN/m	Qk kN/m
W1	6.424	5.5
W2	12.665	5.5
W3	6.424	5.5

Permanent load factor	gamG=1.25
Variable load factor	gamQ=1.5

Maximum span bending moment M=66.657 kNm (ultimate)

End shears

Shear force at left hand end 49.638 kN (ultimate)
Shear force at right hand end 49.638 kN (ultimate)
Unfactored permanent shear at LHE 23.54 kN
Unfactored variable shear at LHE 13.475 kN
Unfactored permanent shear at RHE 23.54 kN
Unfactored variable shear at RHE 13.475 kN

High-yield steel reinforcement.
Diameter of tension bars dia=16 mm
Effective depth of section d=207 mm

DESIGN	**Overall depth**	**250 mm**
SUMMARY	**Effective depth**	**207 mm**
FLEXURE	**Parameter K**	**0.0471**
	Parameter K'	**0.1684**
	Lever arm ratio z/d	**0.95**
TENSION REINFORCEMENT	**Steel area required**	**779.6 mm²**
	Steel area provided	**804.2 mm²**
	Diameter of bars	**16 mm**
	Number of bars	**4**
	Steel percentage	**0.3424 %**
	Minimum area of steel	**343 mm²**
	Maximum area of steel	**11000 mm²**
	Distribution steel	**343 mm²**

Factor Ψ2 for variable load psi2=0.3
SLS stress in reinforcement σs SLSs=500/1.15*(As/Aspr)*ratio*1
/delta=234.2 N/mm²
Design crack width wk=0.3 mm
Max allowable SLS stress σs SLSs1=TABLE 7.2 for dia=16
=240 N/mm²
The bar size 16 mm used complies with Table 7.2N of EC2 Part 1:2004 hence satisfactory.

TENSION	**Characteristic strength**	**500 N/mm²**
REINFORCEMENT	**Diameter of bars**	**16 mm**
SUMMARY	**Number of bars**	**4**
	Spacing of bars	**340 mm**
	Effective depth	**207 mm**
	Area of steel required	**779.6 mm²**
	Area of steel provided	**804.2 mm²**
	Percentage provided	**0.2925 %**
DISTRIBUTION	**Characteristic strength**	**500 N/mm²**
REINFORCEMENT	**Max spacing of bars**	**400 mm**
SUMMARY	**Min area required**	**342 mm²**

Deflection check

Actual span to depth ratio l'd=L*1000/d=23.67
Allowable span/depth ratio l'da=k*N*F1*F2*F3=33.3

DESIGN	**Actual l/d ratio**	**23.67**
SUMMARY	**Basic l/d ratio**	**32.28**
DEFLECTION	**Span factor**	**1**
	Flange beam factor F1	**1**
	Long spans factor F2	**1**
	Steel stress factor F3	**1.032**
	Allowable l/d ratio	**33.3**

NOTE: Care should be taken with the EC2 values as the deflection equations used give unrealistically high values. National Annex to EC2 Part 1:2004, Table NA.5 gives span/effective depth ratios for lightly stressed concrete (C30/37 & ρ=0.5%) as follows:

Simply supported spans	**20**
End spans	**26**
Interior spans	**30**

Shear in longitudinal zone of solid slab of given width

Location for shear calculation:	
Shear force due to ultimate load	VEd=49.64 kN
Term for shear resistance	vRdc=(rho1*fck)^(1/3)=1.743
Shear resistance	VRdc=CRdc*ks*vRdc*bw*d/1000=94.46 kN
Minimum stress	vmin=0.035*ks^1.5*fck^0.5=0.5353 N/mm²
Minimum shear resistance	VRdm=vmin*bw*d/1000=121.9 kN
Modified shear resistance	VRdc=VRdm=121.9 kN

SHEAR SUMMARY	**Design shear force**	**49.64 kN**
	Design shear resistance	**121.9 kN**

Location: Ex3 - Type 6 Stair

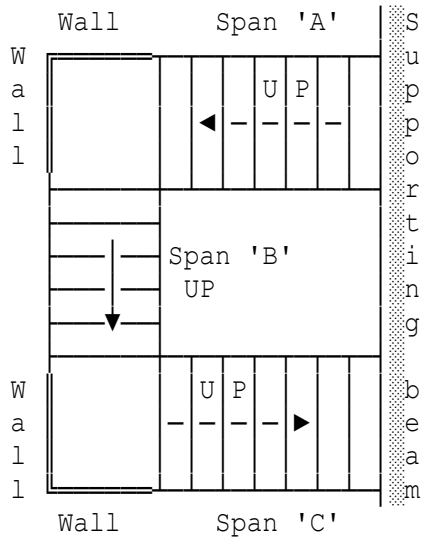

Stair flight design

Open well staircase supported on structure at floor level. Each half landing is supported by walls on two sides.

Design in accordance with EC2:Part 1.

Number of treads	TrdNo=8
Total length of treads on flight	Trdlen=2000 mm
Finished riser height	frish=170 mm
Staircase waist thickness	h=200 mm
Staircase flight width	b=1200 mm
Depth of finish on tread	ftrd=20 mm
Depth of finish on riser	fris=20 mm
Depth of finish on flight soffit	fsoft'=10 mm
Lower landing length	Llan=1250 mm
Lower landing thickness	Llthk=250 mm
Depth of finish on lower landing	flow=20 mm
Depth lower landing soffit finish	slow=10 mm
Upper landing length	Ulan=1250 mm
Upper landing thickness	Ulthk=250 mm
Depth of finish on upper landing	fupp=20 mm
Depth upper landing soffit finish	supp=10 mm
Density of concrete	Gamcon=25 kN/m³
Density of finishes	Gamfin=24 kN/m³
Density of soffit finishes	Gamsfin=20 kN/m³
Variable load	qk=4 kN/m²

Simply supported rectangular reinforced concrete staircase

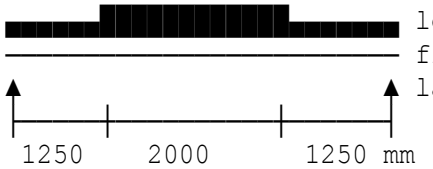

	Load	Gk kN/m	Qk kN/m
lower	W1	4.182	2.4
floor	W2	11.064	4.8
landing	W3	8.364	4.8

Permanent load factor	gamG=1.25
Variable load factor	gamQ=1.5

Maximum span bending moment M=47.147 kNm (ultimate)

End shears

Shear force at left hand end 33.597 kN (ultimate)
Shear force at right hand end 41.566 kN (ultimate)
Unfactored permanent shear at LHE 17.018 kN
Unfactored variable shear at LHE 8.2167 kN
Unfactored permanent shear at RHE 20.793 kN
Unfactored variable shear at RHE 10.383 kN

High-yield steel reinforcement.
Diameter of tension bars dia=16 mm
Nominal concrete cover cover=25 mm
Effective depth of section d=167 mm

DESIGN	**Overall depth**	**200 mm**
SUMMARY	**Effective depth**	**167 mm**
FLEXURE	**Parameter K**	**0.047**
	Parameter K'	**0.1684**
	Lever arm ratio z/d	**0.95**
TENSION REINFORCEMENT	**Steel area required**	**683.5 mm²**
	Steel area provided	**1206 mm²**
	Diameter of bars	**16 mm**
	Number of bars	**6**
	Steel percentage	**0.3411 %**
	Minimum area of steel	**301.8 mm²**
	Maximum area of steel	**9600 mm²**
	Distribution steel	**301.8 mm²**
TENSION	**Characteristic strength**	**500 N/mm²**
REINFORCEMENT	**Diameter of bars**	**16 mm**
SUMMARY	**Number of bars**	**6**
	Spacing of bars	**220 mm**
	Effective depth	**167 mm**
	Area of steel required	**683.5 mm²**
	Area of steel provided	**1206 mm²**
	Percentage provided	**0.5027 %**
DISTRIBUTION	**Characteristic strength**	**500 N/mm²**
REINFORCEMENT	**Max spacing of bars**	**400 mm**
SUMMARY	**Min area required**	**301 mm²**

Deflection check

Actual span to depth ratio l'd=L*1000/d=26.95
Allowable span/depth ratio l'da=k*N*F1*F2*F3=48.69
Absolute value of span/depth l'da=40*k=40

DESIGN	**Actual l/d ratio**	**26.95**
SUMMARY	**Basic l/d ratio**	**32.46**
DEFLECTION	**Span factor**	**1**
	Flange beam factor F1	**1**
	Long spans factor F2	**1**
	Steel stress factor F3	**1.5**
	Allowable l/d ratio	**40**

NOTE: Care should be taken with the EC2 values as the deflection

equations used give unrealistically high values. National Annex to EC2 Part 1:2004, Table NA.5 gives span/effective depth ratios for lightly stressed concrete (C30/37 & ρ=0.5%) as follows:

Simply supported spans	**20**
End spans	**26**
Interior spans	**30**

Shear in longitudinal zone of solid slab of given width

Location for shear calculation:	Stair 2
Shear force due to ultimate load	VEd=33.6 kN
Term for shear resistance	vRdc=(rho1*fck)^(1/3)=2.082
Shear resistance	VRdc=CRdc*ks*vRdc*bw*d/1000=100.2 kN
Minimum stress	vmin=0.035*ks^1.5*fck^0.5=0.5422 N/mm²
Minimum shear resistance	VRdm=vmin*bw*d/1000=108.7 kN
Modified shear resistance	VRdc=VRdm=108.7 kN

SHEAR SUMMARY	**Design shear force**	**33.6 kN**
	Design shear resistance	**108.7 kN**

Location: Ex4 - Staircase between Beams C1-C2 and D1-D2

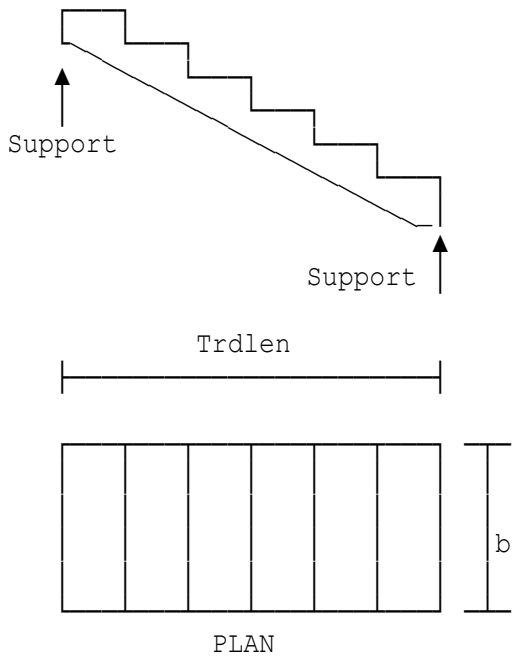

Reinforced concrete staircase spanning between supports at the end of the flight.
No landings.
Design in accordance with EC2:Part 1.

Number of treads	TrdNo=10
Total length of treads on flight	Trdlen=2500 mm
Finished riser height	frish=165 mm
Staircase waist thickness	h=200 mm
Staircase flight width	b=1100 mm
Depth of finish on tread	ftrd=25 mm
Depth of finish on riser	fris=15 mm
Depth of finish on flight soffit	fsoft'=0 mm
Density of concrete	Gamcon=25 kN/m³
Density of finishes	Gamfin=24 kN/m³
Variable load	qk=5 kN/m²

Simply supported rectangular reinforced concrete staircase

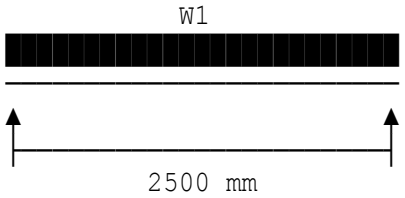

Load	Gk kN/m	Qk kN/m
W1	9.78	5.5

Permanent load factor	gamG=1.25
Variable load factor	gamQ=1.5

Maximum span bending moment M=15.996 kNm (ultimate)

End shears

Shear force at left hand end	25.594 kN (ultimate)
Shear force at right hand end	25.594 kN (ultimate)
Unfactored permanent shear at LHE	12.225 kN
Unfactored variable shear at LHE	6.875 kN
Unfactored permanent shear at RHE	12.225 kN

Unfactored variable shear at RHE 6.875 kN

High-yield steel reinforcement.
Diameter of tension bars dia=12 mm
Effective depth of section d=159 mm

DESIGN SUMMARY	**Overall depth**	**200 mm**
	Effective depth	**159 mm**
FLEXURE	**Parameter K**	**0.023**
	Parameter K'	**0.1684**
	Lever arm ratio z/d	**0.95**
TENSION REINFORCEMENT	**Steel area required**	**243.6 mm²**
	Steel area provided	**565.5 mm²**
	Diameter of bars	**12 mm**
	Number of bars	**5**
	Steel percentage	**0.1393 %**
	Minimum area of steel	**233.3 mm²**
	Maximum area of steel	**8800 mm²**
	Distribution steel	**233.3 mm²**
TENSION REINFORCEMENT SUMMARY	**Characteristic strength**	**500 N/mm²**
	Diameter of bars	**12 mm**
	Number of bars	**5**
	Spacing of bars	**255 mm**
	Effective depth	**159 mm**
	Area of steel required	**243.6 mm²**
	Area of steel provided	**565.5 mm²**
	Percentage provided	**0.257 %**
DISTRIBUTION REINFORCEMENT SUMMARY	**Characteristic strength**	**500 N/mm²**
	Max spacing of bars	**400 mm**
	Min area required	**233 mm²**

Deflection check

Actual span to depth ratio l'd=L*1000/d=15.72
Factor Ψ2 for variable load psi2=0.3
SLS stress in reinforcement σs SLSs=500/1.15*(As/Aspr)*ratio*1 /delta=104.5 N/mm²
Allowable span/depth ratio l'da=k*N*F1*F2*F3=157
Absolute value of span/depth l'da=40*k=40

DESIGN SUMMARY DEFLECTION	**Actual l/d ratio**	**15.72**
	Basic l/d ratio	**104.6**
	Span factor	**1**
	Flange beam factor F1	**1**
	Long spans factor F2	**1**
	Steel stress factor F3	**1.5**
	Allowable l/d ratio	**46**

NOTE: Care should be taken with the EC2 values as the deflection equations used give unrealistically high values. National Annex to EC2 Part 1:2004, Table NA.5 gives span/effective depth ratios for lightly stressed concrete (C30/37 & ρ=0.5%) as follows:

Simply supported spans	**23**
Continuous spans	**30**

Shear in longitudinal zone of solid slab of given width

Location for shear calculation:	Stair 22
Shear force due to ultimate load	VEd=25.59 kN
Term for shear resistance	vRdc=(rho1*fck)^(1/3)=1.593
Shear resistance	VRdc=CRdc*ks*vRdc*bw*d/1000=66.86 kN
Minimum stress	vmin=0.035*ks^1.5*fck^0.5=0.495 N/mm²
Minimum shear resistance	VRdm=vmin*bw*d/1000=86.57 kN
Modified shear resistance	VRdc=VRdm=86.57 kN

SHEAR SUMMARY	**Design shear force**	**25.59 kN**
	Design shear resistance	**86.57 kN**

Location: Typical problem

Design of concrete nibs to BS8110

Design to BS8110(1997), partial safety factor for steel gams=1.15

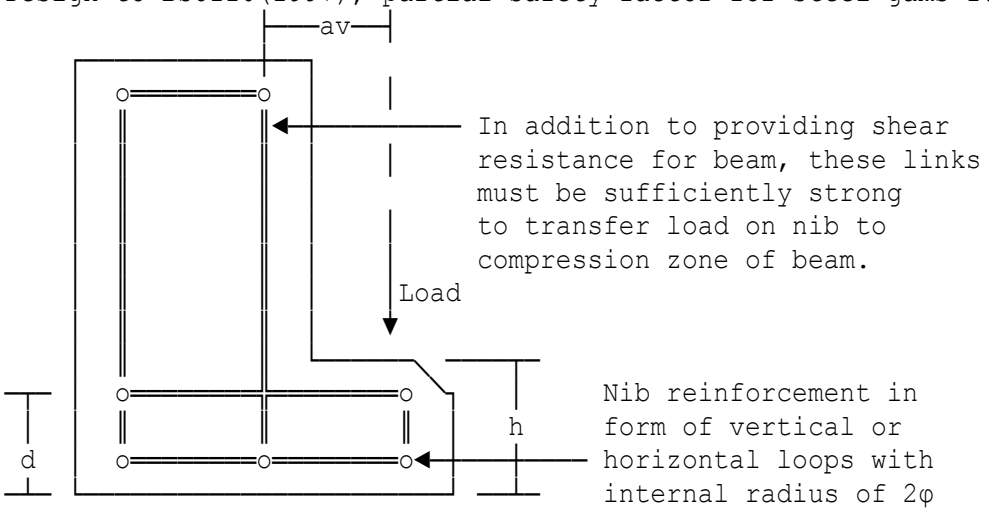

Load acting on nib	load=26.3 kN/m
Dist. from load to CL beam links	av=120 mm
Concrete grade	fcu=40 N/mm²
Steel strength	fy=500 N/mm²
Designated exposure class is XC1	
Specified fixing tolerance	tol=10 mm
Concrete cover to nib steel	cover=25 mm
Size of nib bars	diam=8 mm
Chosen nib thickness	h=115 mm
Chosen bar spacing	Sprov=265 mm

SUMMARY	**Characteristic strength**	**500 N/mm²**
OF MAIN	**Diameter of bars**	**8 mm**
REINFORCEMENT	**Spacing of bars**	**265 mm**
	Area required	**188.97 mm²**
	Area provided	**189.68 mm²**

Check shear resistance

Permissible shear stress	vcp=vc*sdfact=0.94009 N/mm²
Actual shear stress	vca=Nload/(b*d)=0.30581 N/mm²

Shear resistance is satisfactory.

Location: Heavy loading on large nib with mild steel reinforcement

Design of concrete nibs to BS8110

Design to BS8110(1997), partial safety factor for steel gams=1.15

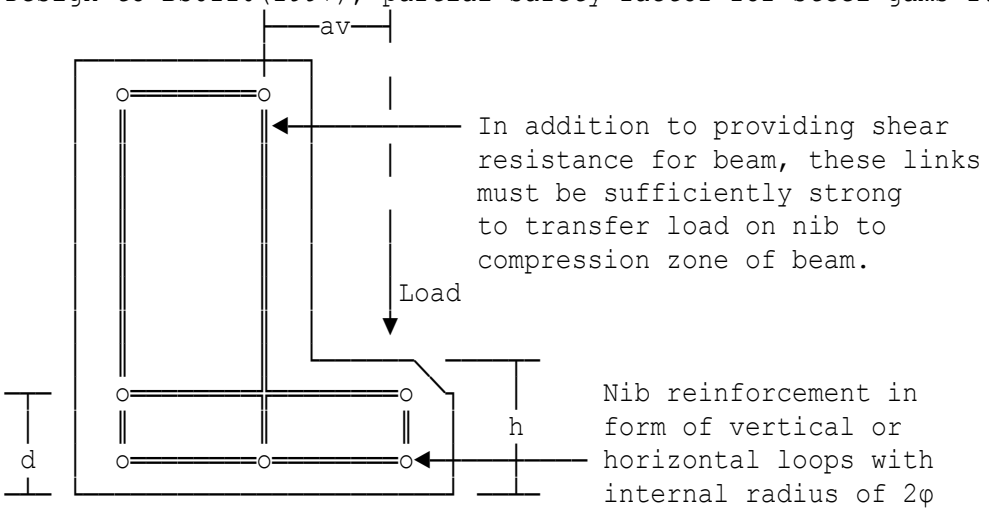

Load acting on nib	load=100 kN/m
Dist. from load to CL beam links	av=500 mm
Concrete grade	fcu=35 N/mm²
Steel strength	fy=250 N/mm²
Designated exposure class is XC3	
Specified fixing tolerance	tol=10 mm
Concrete cover to nib steel	cover=70 mm
Size of nib bars	diam=12 mm
Chosen nib thickness	h=300 mm
Chosen bar spacing	Sprov=110 mm

SUMMARY	**Characteristic strength**	**250 N/mm²**
OF MAIN	**Diameter of bars**	**12 mm**
REINFORCEMENT	**Spacing of bars**	**110 mm**
	Area required	**1026.8 mm²**
	Area provided	**1028.2 mm²**

Check shear resistance

Permissible shear stress	vcp=vc*sdfact=0.63045 N/mm²
Actual shear stress	vca=Nload/(b*d)=0.44643 N/mm²

Shear resistance is satisfactory.

Location: Light loading on small nib with non-standard reinforcement

Design of concrete nibs to BS8110

Design to BS8110(1997), partial safety factor for steel gams=1.15

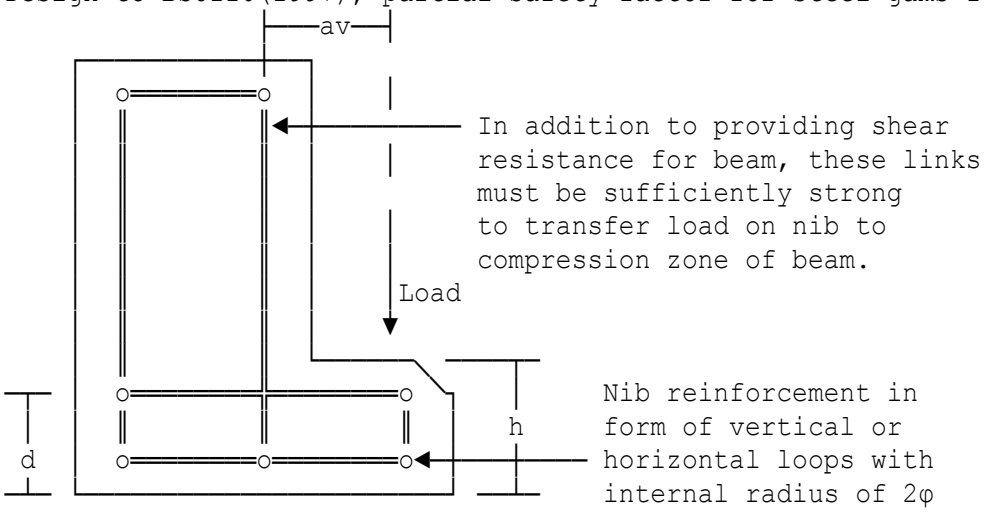

Load acting on nib	load=5 kN/m
Dist. from load to CL beam links	av=350 mm
Concrete grade	fcu=25 N/mm²
Steel strength	fy=300 N/mm²
Min. permiss. proportion of steel	Pmin1=0.00218
Bond coefficient β	beta=0.5
Designated exposure class is XC1	
Specified fixing tolerance	tol=10 mm
Concrete cover to nib steel	cover=40 mm
Size of nib bars	diam=16 mm
Chosen nib thickness	h=100 mm
Chosen bar spacing	Sprov=170 mm

SUMMARY	**Characteristic strength**	**300 N/mm²**
OF MAIN	**Diameter of bars**	**16 mm**
REINFORCEMENT	**Spacing of bars**	**170 mm**
	Area required	**1169 mm²**
	Area provided	**1182.7 mm²**

Check shear resistance

Permissible shear stress	vcp=vc*sdfact=1.3842 N/mm²
Actual shear stress	vca=Nload/(b*d)=0.096154 N/mm²

Shear resistance is satisfactory.

Copyright 1986-2024 Fitzroy Systems Ltd.

Location: Ex1 - Typical problem

Design of concrete nibs to EC2 Part 1:2004

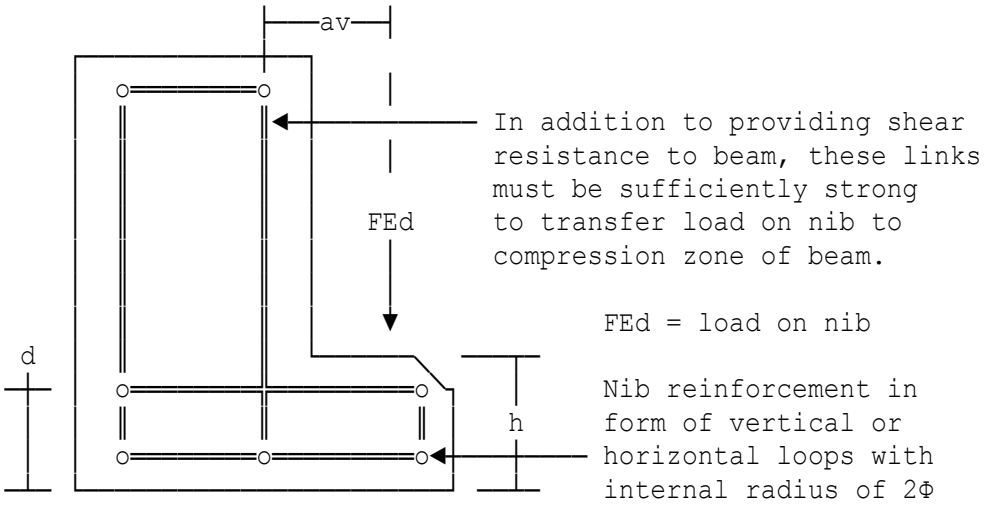

Design load acting on nib	FEd=26.3 kN/m
Dist. from load to CL beam links	av=120 mm
Char yield strength (reinf'ment)	fyk=500 N/mm²
Size of nib bars	dia=8 mm
Chosen nib thickness	h=115 mm
Chosen bar spacing	Sprov=230 mm

SUMMARY OF MAIN REINFORCEMENT	**Characteristic strength**	**500 N/mm²**
	Diameter of bars	**8 mm**
	Spacing of bars	**230 mm**
	Area of steel required	**218 mm²/m**
	Area of steel provided	**218 mm²/m**

Check shear resistance

Term for shear resistance	vRdc=(rho1*fck)^(1/3)=2.0093
Shear resistance	VRdc=CRdc*ks*vRdc*bw*d/1000=41.471 kN
Minimum stress	vmin=0.035*ks^1.5*fck^0.5=0.56 N/mm²
Minimum shear resistance	VRdm=vmin*bw*d/1000=48.16 kN
Modified shear resistance	VRdc=VRdm=48.16 kN

SHEAR SUMMARY	**Design shear force**	**26.3 kN**
	Design shear resistance	**48.16 kN**
	Hence nib shear resistance OK.	

Location: Ex2 - Heavy loading on large nib with mild steel r'ment

Design of concrete nibs to EC2 Part 1:2004

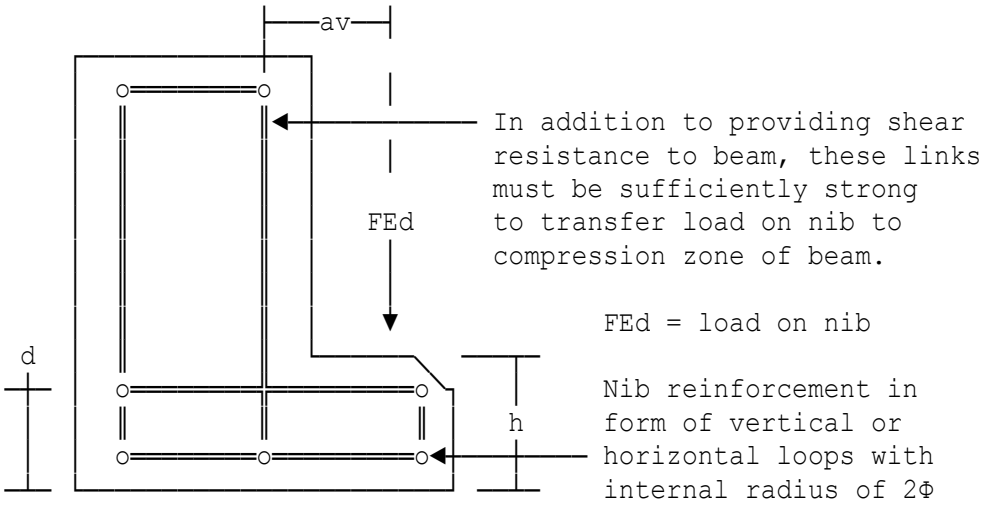

Design load acting on nib	FEd=100 kN/m
Dist. from load to CL beam links	av=500 mm
Char yield strength (reinf'ment)	fyk=500 N/mm²
Size of nib bars	dia=12 mm
Chosen nib thickness	h=300 mm
Chosen bar spacing	Sprov=230 mm

SUMMARY OF MAIN REINFORCEMENT	**Characteristic strength**	**500 N/mm²**
	Diameter of bars	**12 mm**
	Spacing of bars	**230 mm**
	Area of steel required	**489 mm²/m**
	Area of steel provided	**491 mm²/m**

Check shear resistance

Term for shear resistance	vRdc=(rho1*fck)^(1/3)=1.8019
Shear resistance	VRdc=CRdc*ks*vRdc*bw*d/1000=97.689 kN
Minimum stress	vmin=0.035*ks^1.5*fck^0.5 =0.49369 N/mm²
Minimum shear resistance	VRdm=vmin*bw*d/1000=116.02 kN
Modified shear resistance	VRdc=VRdm=116.02 kN

SHEAR SUMMARY	**Design shear force**	**100 kN**
	Design shear resistance	**116.02 kN**
	Hence nib shear resistance OK.	

Location: Ex3 - Light loading on small nib with non-standard r'ment

Design of concrete nibs to EC2 Part 1:2004

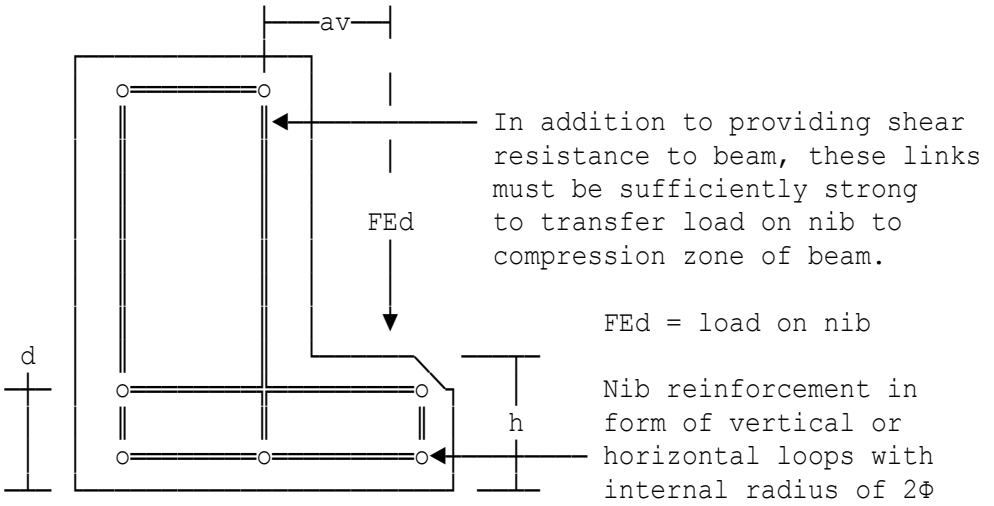

Design load acting on nib	FEd=5 kN/m
Dist. from load to CL beam links	av=350 mm
Char yield strength (reinf'ment)	fyk=500 N/mm²
Size of nib bars	dia=16 mm
Chosen nib thickness	h=125 mm
Chosen bar spacing	Sprov=250 mm

SUMMARY OF MAIN REINFORCEMENT	**Characteristic strength**	**500 N/mm²**
	Diameter of bars	**16 mm**
	Spacing of bars	**250 mm**
	Area of steel required	**804 mm²/m**
	Area of steel provided	**804 mm²/m**

Check shear resistance

Term for shear resistance	vRdc=(rho1*fck)^(1/3)=2.9049
Shear resistance	VRdc=CRdc*ks*vRdc*bw*d/1000=57.168 kN
Minimum stress	vmin=0.035*ks^1.5*fck^0.5 =0.49497 N/mm²
Minimum shear resistance	VRdm=vmin*bw*d/1000=40.588 kN

SHEAR SUMMARY	**Design shear force**	**5 kN**
	Design shear resistance	**57.168 kN**
	Hence nib shear resistance OK.	

Location: All options using normal-weight concrete

Fire resistance requirements to BS8110:Part 2:1985 Tables 4.2-4.6

Chosen fire resistance period	fire=2 hours
Thickness of wall	wThick=350 mm
Size of bars	di=20 mm
Spacing of bars	BSpace=200 mm
Bars near both faces (1=Yes/0=No)	faces=1
Proportion of steel provided	prop=(1+faces)*PI/4*di^2/(BSpace *wThick)=0.008976

The values illustrated below correspond to data from Table 4.6

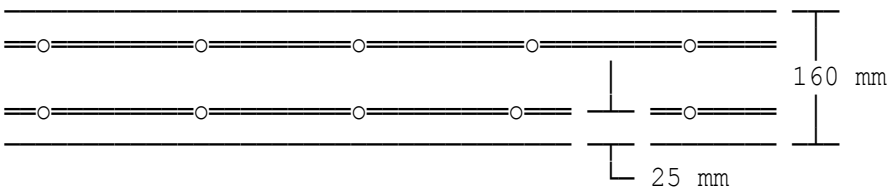

R E I N F O R C E D W A L L

The values illustrated below correspond to data from Table 4.2.

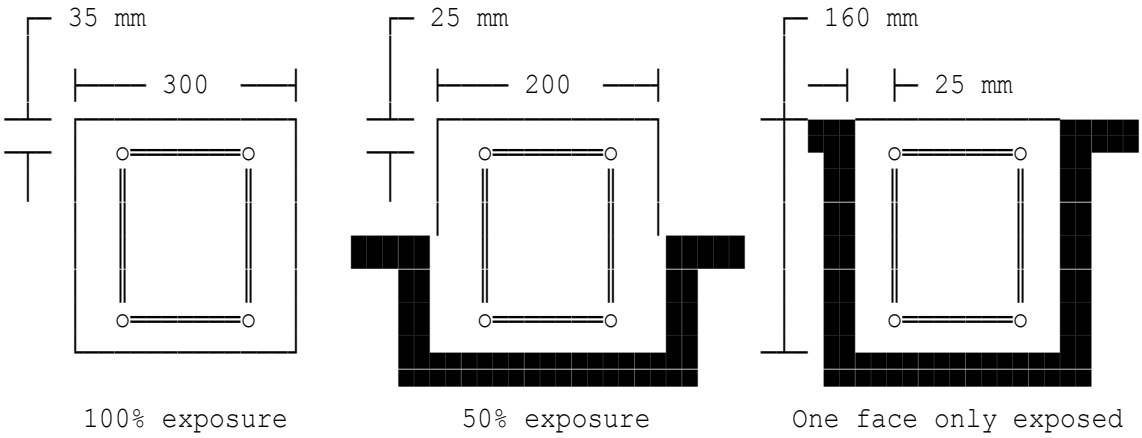

C O L U M N S (P l a n v i e w)

The values illustrated below correspond to data from Table 4.3

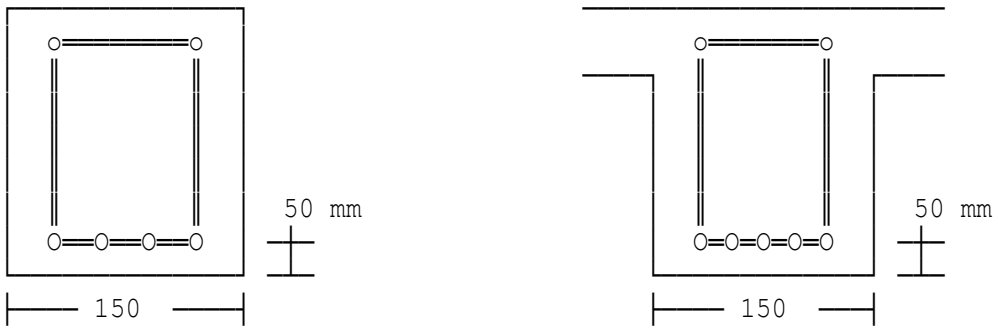

C O N T I N U O U S
R E C T A N G U L A R B E A M

C O N T I N U O U S
F L A N G E D B E A M

The values illustrated below correspond to data from Tables 4.4 and 4.5

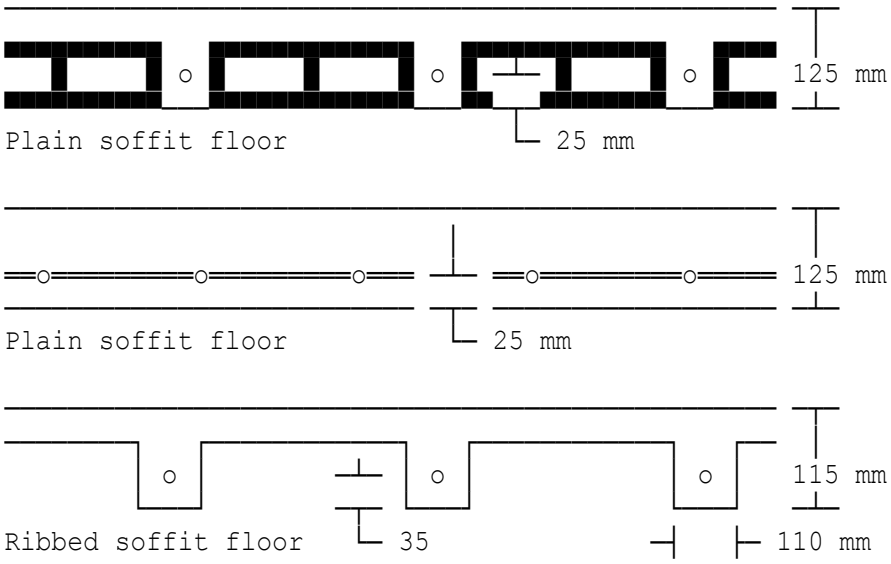

C O N T I N U O U S F L O O R C O N S T R U C T I O N

Location: Typical lightweight concrete calculations

Fire resistance requirements to BS8110:Part 2:1985 Tables 4.2-4.6

Chosen fire resistance period fire=4 hours
Proportion of steel provided prop=0.008

The values illustrated below correspond to data from Table 4.6

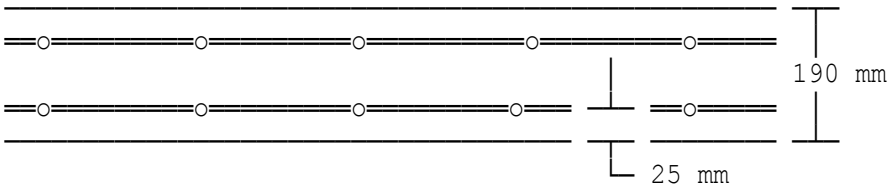

R E I N F O R C E D W A L L

The values illustrated below correspond to data from Table 4.2.

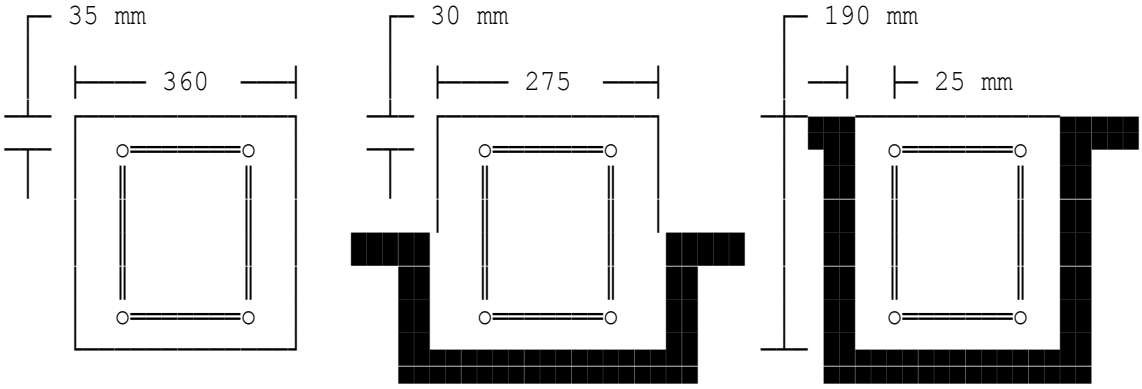

100% exposure 50% exposure One face only exposed

C O L U M N S (P l a n v i e w)

The values illustrated below correspond to data from Table 4.3

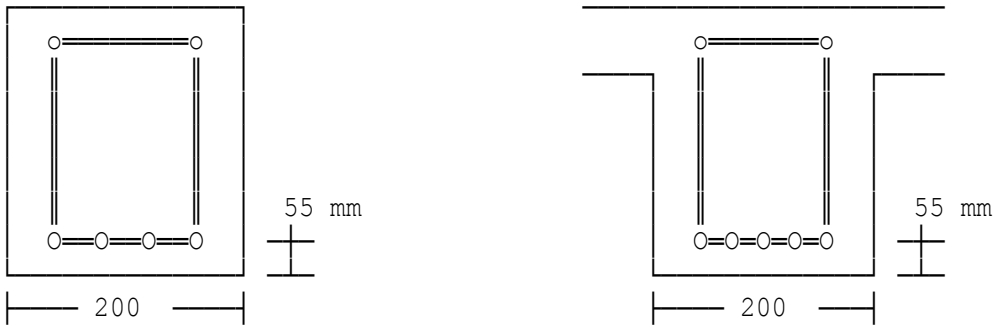

C O N T I N U O U S R E C T A N G U L A R B E A M

C O N T I N U O U S F L A N G E D B E A M

The values illustrated below correspond to data from Tables 4.4 and 4.5

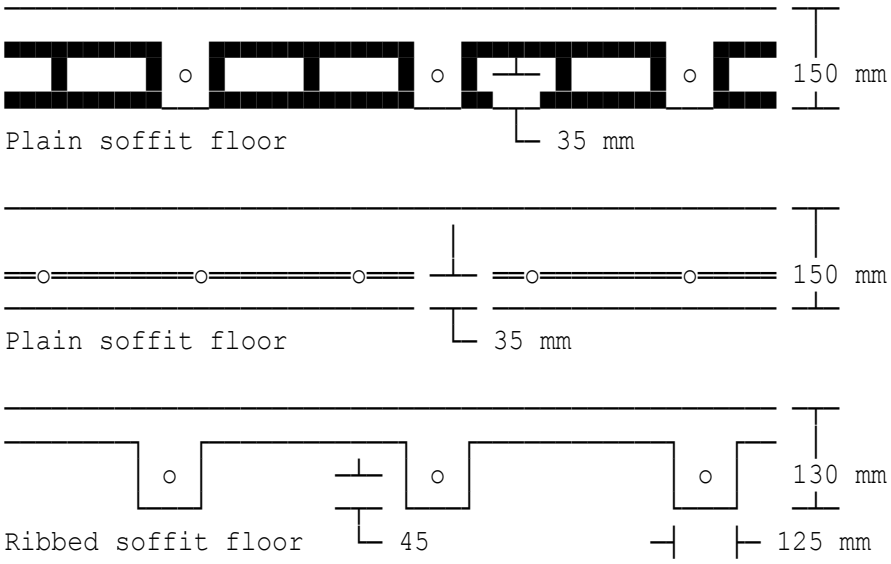

C O N T I N U O U S F L O O R C O N S T R U C T I O N

Location: Example of automatic calculation of steel proportion

Fire resistance requirements to BS8110:Part 2:1985 Tables 4.2-4.6

Chosen fire resistance period	fire=2.75 hours
Thickness of wall	wThick=350 mm
Size of bars	di=12 mm
Spacing of bars	BSpace=300 mm
Bars near both faces (1=Yes/0=No)	faces=0
Proportion of steel provided	prop=(1+faces)*PI/4*di^2/(BSpace *wThick)=0.0010771

As steel proportion is less than 0.004, the steel provided is insufficient for the wall to be considered as reinforced, and wall must be considered as unreinforced for design purposes.

The values illustrated below correspond to data from Table 4.2.

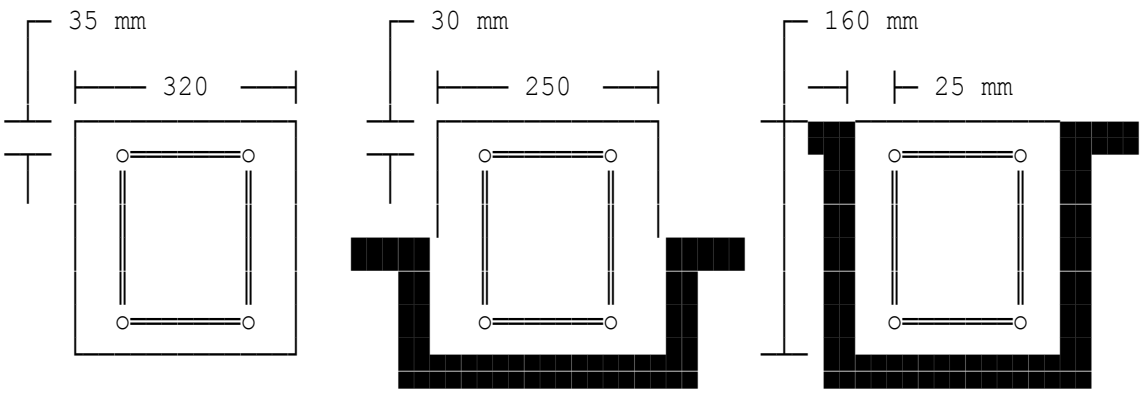

100% exposure 50% exposure One face only exposed

C O L U M N S (P l a n v i e w)

The values illustrated below correspond to data from Table 4.3

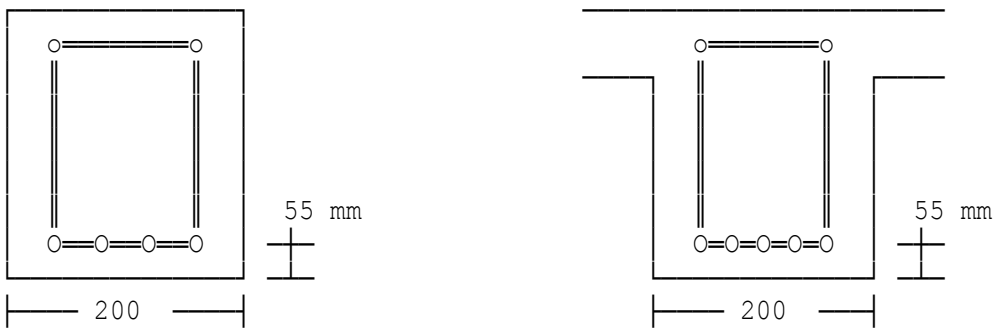

F R E E L Y - S U P P O R T E D R E C T A N G U L A R B E A M

F R E E L Y - S U P P O R T E D F L A N G E D B E A M

The values illustrated below correspond to data from Tables 4.4 and 4.5

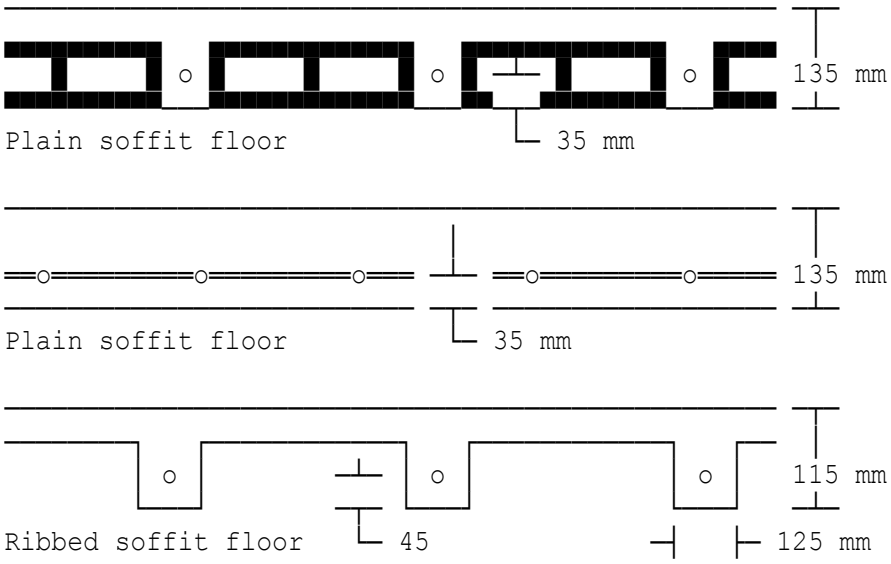

F R E E L Y - S U P P O R T E D F L O O R C O N S T R U C T I O N

Location: All options using normal-weight concrete

Flat slab construction fire resistance to EC2 Part 1-2:2004

Fire resistance period required fire=2 hours

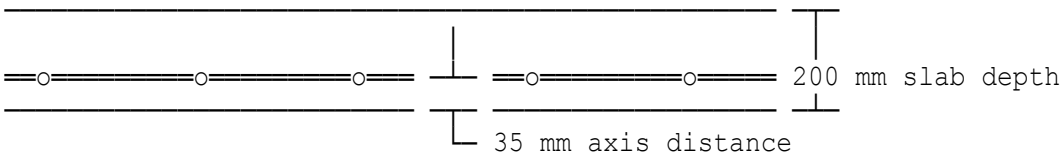

N O R M A L - W E I G H T C O N C R E T E
F L A T S L A B C O N S T R U C T I O N

Reinforced wall fire resistance to EC2 Part 1-2:2004

Fire resistance period required fire=2 hours

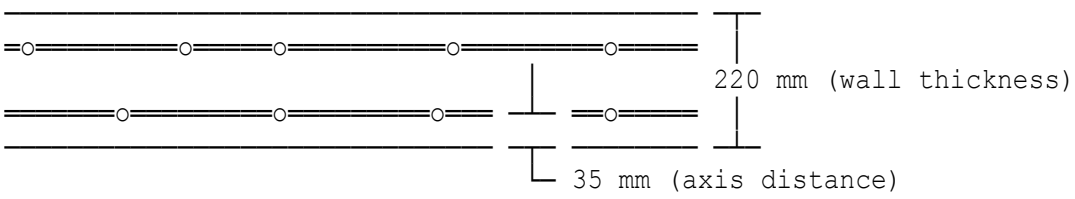

N O R M A L - W E I G H T C O N C R E T E
R E I N F O R C E D W A L L

Column fire resistance to EC2 Part 1-2:2004

Fire resistance period required fire=2 hours

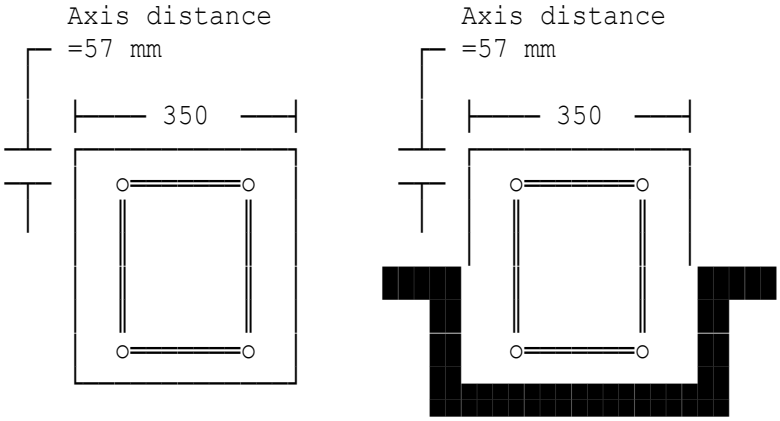

100% exposure 50% exposure

N O R M A L - W E I G H T C O N C R E T E
C O L U M N S (P l a n v i e w)

Floor beam fire resistance to EC2 Part 1-2:2004

Fire resistance period required fire=2 hours

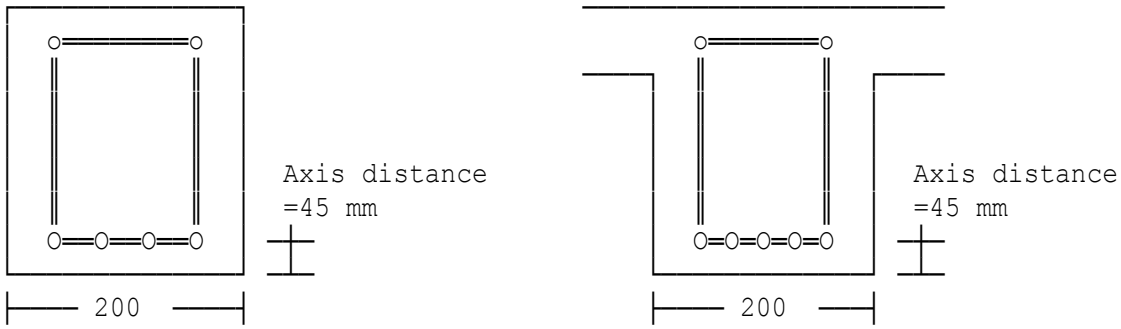

N O R M A L - W E I G H T C O N C R E T E
C O N T I N U O U S C O N T I N U O U S
R E C T A N G U L A R B E A M F L A N G E D B E A M

Floor slab fire resistance to EC2 Part 1-2:2004

Fire resistance period required fire=2 hours

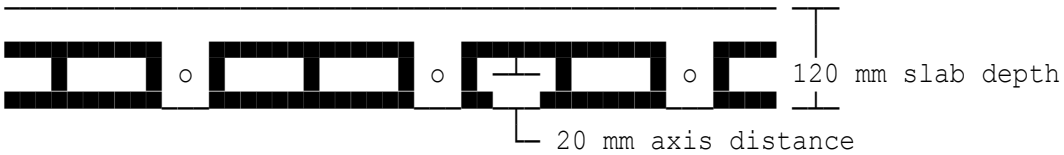

Plain soffit floor

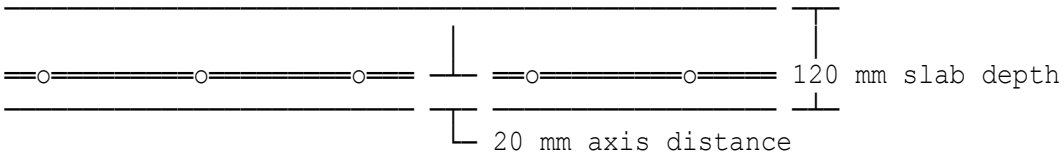

Plain soffit floor

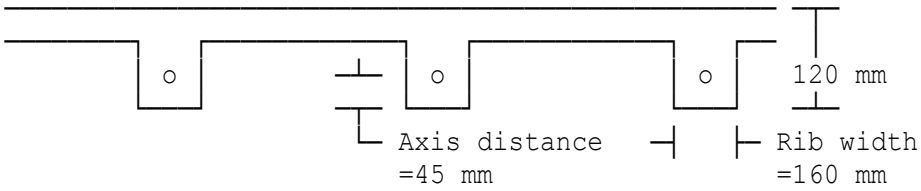

Ribbed soffit floor

N O R M A L - W E I G H T C O N C R E T E
C O N T I N U O U S F L O O R C O N S T R U C T I O N

Location: Typical lightweight concrete calculations

Flat slab construction fire resistance to EC2 Part 1-2:2004

Fire resistance period required fire=4 hours

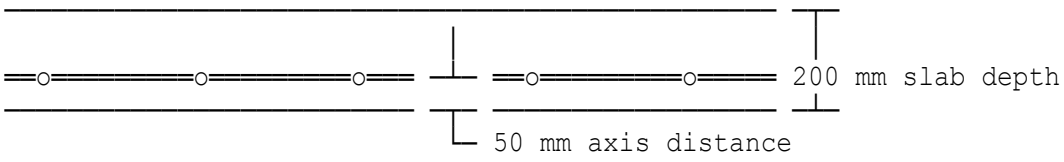

N O R M A L - W E I G H T C O N C R E T E
F L A T S L A B C O N S T R U C T I O N

Reinforced wall fire resistance to EC2 Part 1-2:2004

Fire resistance period required fire=4 hours

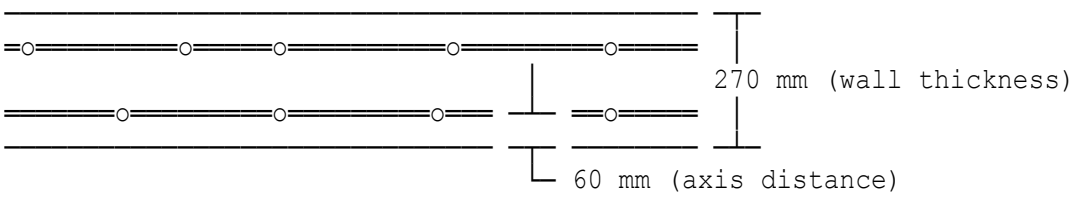

N O R M A L - W E I G H T C O N C R E T E
R E I N F O R C E D W A L L

Column fire resistance to EC2 Part 1-2:2004

Fire resistance period required fire=4 hours

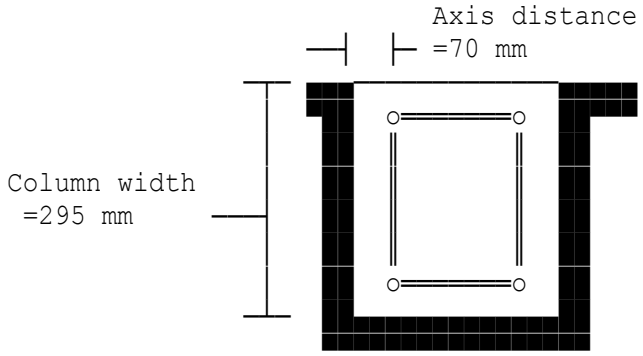

One face only exposed

N O R M A L - W E I G H T C O N C R E T E
C O L U M N S (P l a n v i e w)

Floor beam fire resistance to EC2 Part 1-2:2004

Fire resistance period required fire=4 hours

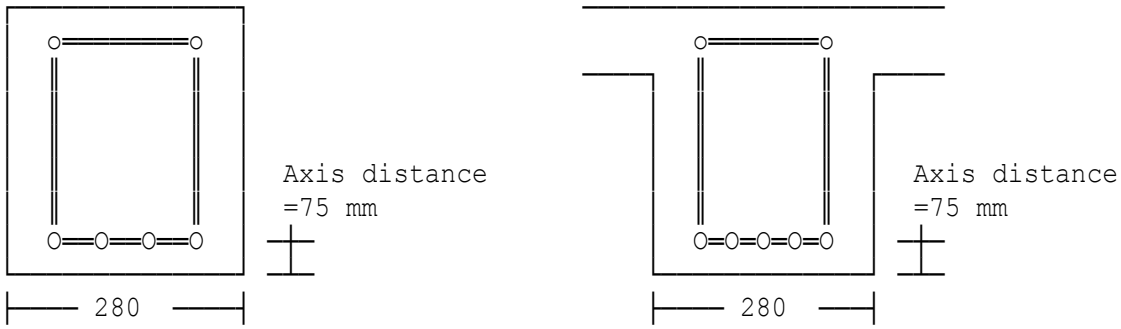

N O R M A L - W E I G H T C O N C R E T E
C O N T I N U O U S C O N T I N U O U S
R E C T A N G U L A R B E A M F L A N G E D B E A M

Floor slab fire resistance to EC2 Part 1-2:2004

Fire resistance period required fire=4 hours

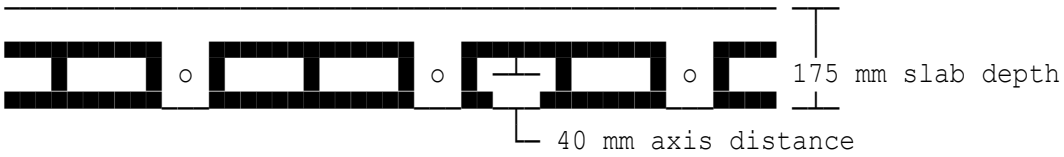

Plain soffit floor

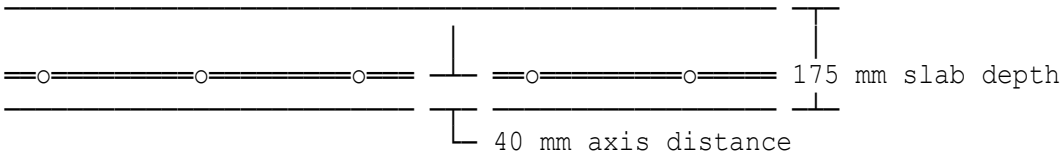

Plain soffit floor

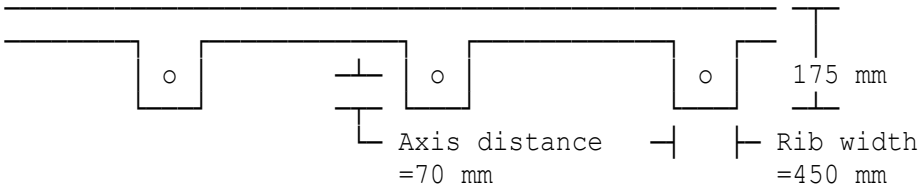

Ribbed soffit floor

N O R M A L - W E I G H T C O N C R E T E
C O N T I N U O U S F L O O R C O N S T R U C T I O N

Location: Example of automatic calculation of steel proportion

Flat slab construction fire resistance to EC2 Part 1-2:2004

Fire resistance period required fire=3 hours

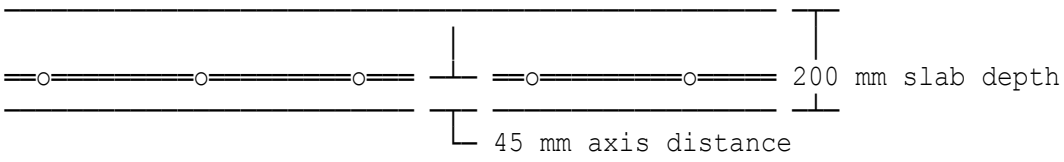

N O R M A L - W E I G H T C O N C R E T E
F L A T S L A B C O N S T R U C T I O N

Reinforced wall fire resistance to EC2 Part 1-2:2004

Fire resistance period required fire=3 hours

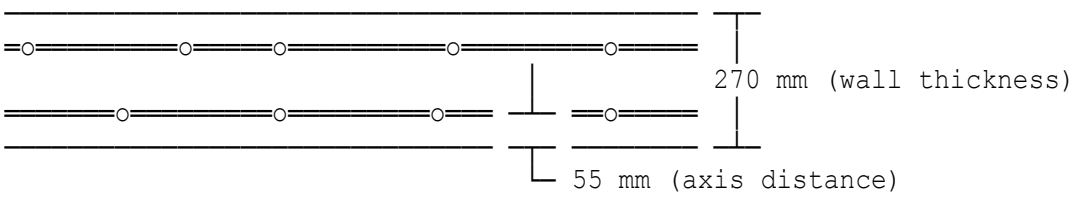

N O R M A L - W E I G H T C O N C R E T E
R E I N F O R C E D W A L L

Column fire resistance to EC2 Part 1-2:2004

Fire resistance period required fire=3 hours

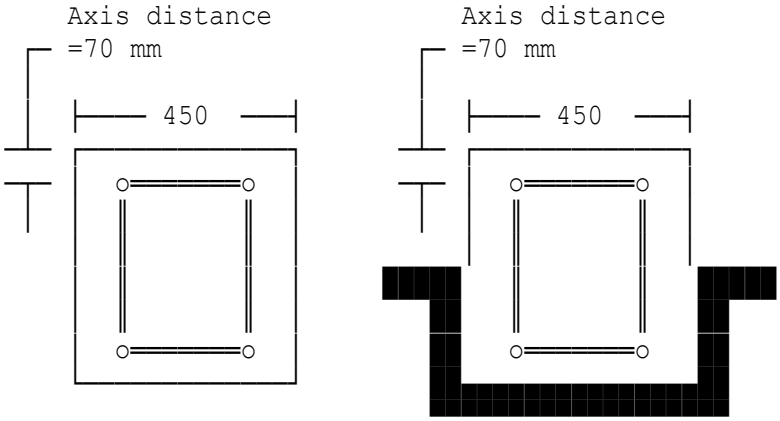

100% exposure 50% exposure

N O R M A L - W E I G H T C O N C R E T E
C O L U M N S (P l a n v i e w)

Floor beam fire resistance to EC2 Part 1-2:2004

Fire resistance period required fire=3 hours

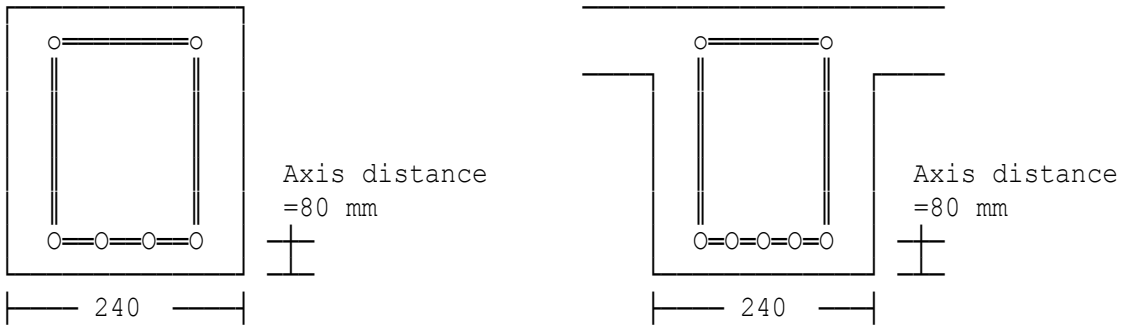

N O R M A L - W E I G H T C O N C R E T E
F R E E L Y - S U P P O R T E D R E C T A N G U L A R B E A M

F R E E L Y - S U P P O R T E D F L A N G E D B E A M

Floor slab fire resistance to EC2 Part 1-2:2004

Fire resistance period required fire=3 hours

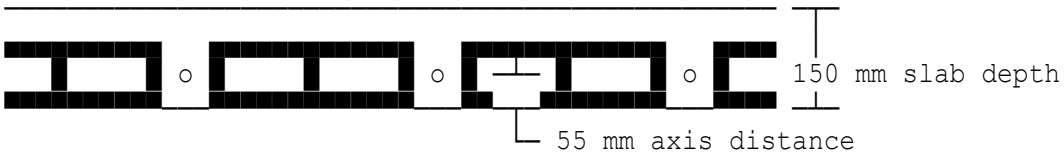

Plain soffit floor

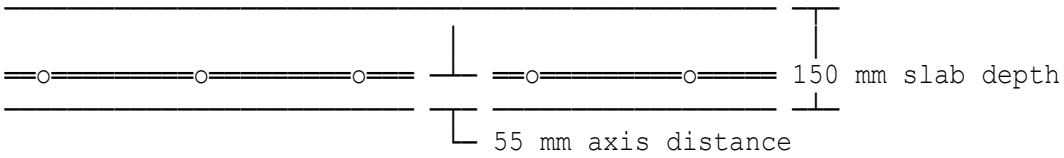

Plain soffit floor

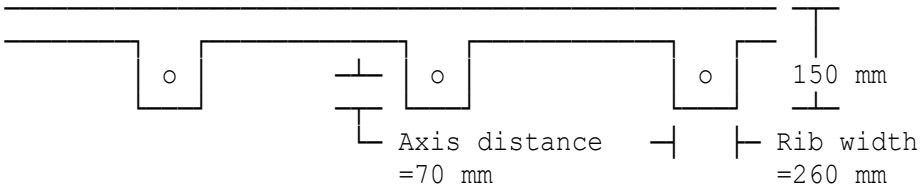

Ribbed soffit floor

N O R M A L - W E I G H T C O N C R E T E
F R E E L Y - S U P P O R T E D F L O O R C O N S T R U C T I O N

Location: Ex1 - Metre width of 500mm deep slab

General reinforced concrete section to BS5400:Part 4:1990

Char. strength of concrete	fcum=40 N/mm²
Number of cross-sections	ncs=1
Cross-section 1	
Number of layers of reinf'ment	nols=2
Char. strength of reinforcement	fym=460 N/mm²
Young's modulus of reinforcement	Em=200000 N/mm²
Layer 1	
Area of reinforcement	As(1)=402 mm²
Depth from compression face	ds(1)=50 mm
Layer 2	
Area of reinforcement	As(2)=5629 mm²
Depth from compression face	ds(2)=444 mm

Ultimate limit state : flexure of general reinforced concrete section

RESULTS FROM ULTIMATE MOMENT ANALYSIS

Section moment resistance	866.36 kNm
Depth to Neutral Axis	134.66 mm

Strain at centroid of tension reinforcement 0.0080403 is greater than limiting strain 0.004 from Clause 5.3.2.1.
Ductility requirements are satisfied.

Ultimate limit state : Shear calculations to Clauses 5.3.3 & 5.4.4

Ultimate shear force	V=500 kN
Number of layers	sl=1
Layer number	ln(1)=2
Area to be included in calcs.	Asc(1)=5629 mm²
Breadth of section for shear	b=1000 mm
Spacing of links along member	sv1=200 mm
Number of legs	sv2=4
Diameter of link reinforcement	bdl=12 mm
Characteristic strength of links	fyv=460 N/mm²
Characteristic strength	fyasa=460 N/mm²

RESULTS FROM SHEAR ANALYSIS

Slab section
Shear reinforcement adequate: Area required 351.62 mm²
Area provided 452.39 mm²

An area of longitudinal reinforcement 624.69 mm² is required in the tensile zone in excess of that required for bending.

Serviceability limit state calculations

For stresses to Clause 4.1.1.3 & crack widths to Clause 5.8.8.2

Factored dead load moment dlm=200 kNm
Factored live load moment llm=300 kNm
Cover from notional surface at which the crack width is calculated to outermost reinforcement cnom=35 mm
Diameter bd1=32 mm
Spacing bspac=150 mm

RESULTS FROM SERVICEABILITY LIMIT STATE ANALYSIS

Depth to Neutral Axis 158.73 mm

Concrete stresses

Cross-section	Stress at top N/mm²	Permissible N/mm²
1	15.667	20

Reinforcement stresses (tension-negative, compression-positive)

Layer	Depth mm	Stress N/mm²	Permissible N/mm²
1	50	86.549	345
2	444	-227.08	-345

Design crack width 0.24331 mm
Design crack width should be less than the values in Table 1.

DESIGN SUMMARY

Char.comp.strength of concrete	**40 N/mm²**
Char.strength of reinforcement	**460 N/mm²**
Reinforcement material factor	**1.15**
Section moment resistance	**866.36 kNm**
Ultimate shear force	**500 kN**
Area of shear re'ment required	**351.62 mm²**
Area of shear re'ment provided	**452.39 mm²**
Diameter of tensile reinf'ment	**32 mm**
Spacing of tensile reinf'ment	**150 mm**
Crack width	**0.24331 mm**

Location: I-beam section

General reinforced concrete section to BS5400:Part 4:1990

```
Number of cross-sections          ncs=5
Cross-section 1
Char. strength of concrete        fcu(1)=40 N/mm²
Cross-section 2
Char. strength of concrete        fcu(2)=30 N/mm²
Cross-section 3
Char. strength of concrete        fcu(3)=30 N/mm²
Cross-section 4
Char. strength of concrete        fcu(4)=30 N/mm²
Cross-section 5
Char. strength of concrete        fcu(5)=30 N/mm²
Number of layers of reinf'ment    nols=4
Layer 1
Area of reinforcement             As(1)=678 mm²
Depth from compression face       ds(1)=50 mm
Characteristic strength           fy(1)=250 N/mm²
Young's modulus for reinforcement E(1)=190000 N/mm²
Layer 2
Area of reinforcement             As(2)=678 mm²
Depth from compression face       ds(2)=150 mm
Characteristic strength           fy(2)=250 N/mm²
Young's modulus for reinforcement E(2)=190000 N/mm²
Layer 3
Area of reinforcement             As(3)=3927 mm²
Depth from compression face       ds(3)=850 mm
Characteristic strength           fy(3)=460 N/mm²
Young's modulus for reinforcement E(3)=200000 N/mm²
Layer 4
Area of reinforcement             As(4)=6434 mm²
Depth from compression face       ds(4)=950 mm
Characteristic strength           fy(4)=460 N/mm²
Young's modulus for reinforcement E(4)=200000 N/mm²
```

Ultimate limit state : flexure of general reinforced concrete section

RESULTS FROM ULTIMATE MOMENT ANALYSIS

Section moment resistance	3321.2 kNm
Depth to Neutral Axis	324.55 mm

Strain at centroid of tension reinforcement 0.0063361 is greater than limiting strain 0.004 from Clause 5.3.2.1.
Ductility requirements are satisfied.

Ultimate limit state : Shear calculations to Clauses 5.3.3 & 5.4.4

Ultimate shear force	V=200 kN
Number of layers	sl=2
Layer number	ln(1)=3
Area to be included in calcs.	Asc(1)=1200 mm²
Layer number	ln(2)=4
Area to be included in calcs.	Asc(2)=2000 mm²
Breadth of section for shear	b=200 mm
Char. strength for analysis	fcu=30 N/mm²
Distance of section from support	av=1200 mm
Spacing of links along member	sv1=650 mm
Number of legs	sv2=2
Diameter of link reinforcement	bdl=16 mm
Characteristic strength of links	fyv=460 N/mm²
Characteristic strength	fyasa=460 N/mm²

RESULTS FROM SHEAR ANALYSIS

Beam section
Shear reinforcement adequate: Area required 142.38 mm²
Area provided 402.12 mm²

An area of longitudinal reinforcement 249.88 mm² is required in the tensile zone in excess of that required for bending.

Serviceability limit state calculations

For stresses to Clause 4.1.1.3 & crack widths to Clause 5.8.8.2

Factored dead load moment	dlm=400 kNm
Factored live load moment	llm=450 kNm

Cover from notional surface at which the crack width is calculated

To outermost reinforcement	cnom=20 mm
To Layer 4	cre=30 mm
Diameter	bd1=32 mm
Spacing	bspac=125 mm

RESULTS FROM SERVICEABILITY LIMIT STATE ANALYSIS

Depth to Neutral Axis 331.29 mm

Concrete stresses

Cross-section	Stress at top N/mm²	Permissible N/mm²
1	6.7287	20
2	2.4085	15
3	0.57396	15

Reinforcement stresses (tension-negative, compression-positive)

Layer	Depth mm	Stress N/mm²	Permissible N/mm²
1	50	45.79	187.5
2	150	29.511	187.5
3	850	-88.884	-345
4	950	-106.02	-345

Design crack width 0.10525 mm
Design crack width should be less than the values in Table 1.

DESIGN SUMMARY

Reinforcement material factor	**1.15**
Section moment resistance	**3321.2 kNm**
Ultimate shear force	**200 kN**
Area of shear re'ment required	**142.38 mm²**
Area of shear re'ment provided	**402.12 mm²**

Location: 500mm wide beam section

General reinforced concrete section to BS5400:Part 4:1990

Char. strength of concrete	fcum=18 N/mm²
Number of cross-sections	ncs=1
Cross-section 1	
Number of layers of reinf'ment	nols=2
Young's modulus of reinforcement	Em=200000 N/mm²
Layer 1	
Area of reinforcement	As(1)=678 mm²
Depth from compression face	ds(1)=50 mm
Characteristic strength	fy(1)=250 N/mm²
Layer 2	
Area of reinforcement	As(2)=3927 mm²
Depth from compression face	ds(2)=950 mm
Characteristic strength	fy(2)=460 N/mm²

Ultimate limit state : flexure of general reinforced concrete section

RESULTS FROM ULTIMATE MOMENT ANALYSIS

Section moment resistance	1227.5 kNm
Depth to Neutral Axis	388.95 mm

Strain at centroid of tension reinforcement 0.0050486 is greater than limiting strain 0.004 from Clause 5.3.2.1.
Ductility requirements are satisfied.

Ultimate limit state : Shear calculations to Clauses 5.3.3 & 5.4.4

Ultimate shear force	V=2000 kN
Number of layers	sl=1
Layer number	ln(1)=2
Area to be included in calcs.	Asc(1)=1000 mm²
Breadth of section for shear	b=500 mm

*** WARNING ***
Shear force for calculations restricted to V=VMAX1=1511.4 kN

Revised applied shear stress	v=V*1000/(b*d)=3.182 N/mm²

*** WARNING ***
Concrete grade assumed for calculations cu=20

Spacing of links along member	sv1=750 mm

*** WARNING ***
Spacing of links along member 750 mm exceeds 712.5 mm

Number of legs	sv2=4
Diameter of link reinforcement	bdl=12 mm
Characteristic strength of links	fyv=250 N/mm²

*** WARNING ***
Shear reinforcement inadequate :

Characteristic strength	fyasa=460 N/mm²

RESULTS FROM SHEAR ANALYSIS

Beam section
WARNING Shear force for calculations restricted to 1511.4 kN
to comply with maximum shear stress limitations. Clause 5.3.5.1.
*** WARNING *** Shear reinforcement inadequate
increase area or reduce spacing Area required 5663.9 mm²
Area provided 452.39 mm²
WARNING Spacing of links along member 750 mm exceeds 712.5 mm

An area of longitudinal reinforcement 1888.4 mm² is required
in the tensile zone in excess of that required for bending.

Serviceability limit state calculations

For stresses to Clause 4.1.1.3 & crack widths to Clause 5.8.8.2

Factored dead load moment dlm=200 kNm
Factored live load moment llm=300 kNm
Cover from notional surface at which the crack width is calculated to
outermost reinforcement cnom=30 mm
Diameter bd1=32 mm
Spacing bspac=150 mm

RESULTS FROM SERVICEABILITY LIMIT STATE ANALYSIS

Depth to Neutral Axis 306.73 mm

Concrete stresses

Cross-section	Stress at top N/mm²	Permissible N/mm²
1	7.1312	9

Reinforcement stresses (tension-negative, compression-positive)

Layer	Depth mm	Stress N/mm²	Permissible N/mm²
1	50	59.687	187.5
2	950	-149.55	-345

Design crack width 0.15433 mm
Design crack width should be less than the values in Table 1.

DESIGN SUMMARY

Char.comp.strength of concrete	**18 N/mm²**
Reinforcement material factor	**1.15**
Section moment resistance	**1227.5 kNm**
Ultimate shear force	**2000 kN**
Area of shear re'ment required	**5663.9 mm²**
Area of shear re'ment provided	**452.39 mm²**

WARNING:
Shear reinforcement inadequate

Diameter of tensile reinf'ment	**32 mm**
Spacing of tensile reinf'ment	**150 mm**
Crack width	**0.15433 mm**

Location: 190mm deep slab section

General reinforced concrete section to BS5400:Part 4:1990

Char. strength of concrete	fcum=30 N/mm²
Number of cross-sections	ncs=1
Cross-section 1	
Number of layers of reinf'ment	nols=1
Char. strength of reinforcement	fym=460 N/mm²
Young's modulus of reinforcement	Em=200000 N/mm²
Layer 1	
Area of reinforcement	As(1)=452 mm²
Depth from compression face	ds(1)=140 mm

Ultimate limit state : flexure of general reinforced concrete section

RESULTS FROM ULTIMATE MOMENT ANALYSIS

Section moment resistance	22.856 kNm
Depth to Neutral Axis	30.111 mm

Strain at centroid of tension reinforcement 0.012773 is greater than limiting strain 0.004 from Clause 5.3.2.1.
Ductility requirements are satisfied.

Ultimate limit state : Shear calculations to Clauses 5.3.3 & 5.4.4

Ultimate shear force	V=300 kN
Number of layers	sl=1
Layer number	ln(1)=1
Area to be included in calcs.	Asc(1)=452 mm²
Breadth of section for shear	b=500 mm

*** WARNING ***
Shear force for calculations restricted to V=VMAX1=287.55 kN
Revised applied shear stress v=V*1000/(b*d)=4.1079 N/mm²
*** WARNING ***
Shear force for calculations further restricted to V=VMAX2=55.768 kN
Revised applied shear stress v=V*1000/(b*d)=0.79669 N/mm²

RESULTS FROM SHEAR ANALYSIS

Slab section
WARNING Shear force for calculations restricted to 287.55 kN to comply with maximum shear stress limitations. Clause 5.3.5.1.
WARNING Shear force for calculations further restricted to 55.768 kN to comply with stress limitations for slabs with depth less than 200mm. Clause 5.4.4.1.
Applied shear stress is less than the ultimate shear stress
Shear reinforcement not allowed in slabs less than 200mm thick

Copyright 1986-2024 Fitzroy Systems Ltd.

DESIGN SUMMARY

Char.comp.strength of concrete	**30 N/mm²**
Char.strength of reinforcement	**460 N/mm²**
Reinforcement material factor	**1.15**
Section moment resistance	**22.856 kNm**

Location: 300mm deep slab section

General reinforced concrete section to BS5400:Part 4:1990

Char. strength of concrete	fcum=30 N/mm²
Number of cross-sections	ncs=1
Cross-section 1	
Number of layers of reinf'ment	nols=1
Char. strength of reinforcement	fym=460 N/mm²
Young's modulus of reinforcement	Em=200000 N/mm²
Layer 1	
Area of reinforcement	As(1)=1000 mm²
Depth from compression face	ds(1)=250 mm

Ultimate limit state : flexure of general reinforced concrete section

RESULTS FROM ULTIMATE MOMENT ANALYSIS

Section moment resistance	87.982 kNm
Depth to Neutral Axis	66.613 mm

Strain at centroid of tension reinforcement 0.0096356 is greater than limiting strain 0.004 from Clause 5.3.2.1.
Ductility requirements are satisfied.

Ultimate limit state : Shear calculations to Clauses 5.3.3 & 5.4.4

Ultimate shear force	V=50 kN
Number of layers	sl=1
Layer number	ln(1)=1
Area to be included in calcs.	Asc(1)=1000 mm²
Breadth of section for shear	b=500 mm

RESULTS FROM SHEAR ANALYSIS

Slab section
Applied shear stress is less than the ultimate shear stress
Shear reinforcement not required for a slab. Clause 5.4.4.1.

DESIGN SUMMARY

Char.comp.strength of concrete	**30 N/mm²**
Char.strength of reinforcement	**460 N/mm²**
Reinforcement material factor	**1.15**
Section moment resistance	**87.982 kNm**

Location: Ex1 - Reinforced concrete deck slab Ex 6.1.1

General reinforced concrete section

Concrete compressive strength fckm=35 N/mm²
Material factor gamc=1.5
Number of cross-sections ncs=1
Cross-section 1
Number of layers of reinf'ment nols=1
Characteristic yield strength fykm=500 N/mm²
Young's modulus of reinforcement Es=200000 N/mm²
Material factor for reinforcement gams=1.15
Reinforcement stress-strain relationship
Horizontal top branch with no strain limits
Layer 1
Area of reinforcement As(1)=2094 mm²
Depth from compression face ds(1)=200 mm

Ultimate limit state : flexure of general reinforced concrete section

The calculation is based on BS EN 1992-1-1 Clause 6.1(2)P.

RESULTS FROM ULTIMATE MOMENT ANALYSIS

Section moment resistance 164.08 kNm
Depth to Neutral Axis 56.707 mm

Ultimate limit state : Shear calculations to EN 1992-1-1 Cl.6

Slab section:
Longitudinal Reinforcement
Area to be included in calcs. Asc(1)=2094 mm²
Concrete Section
Effective width for shear bw=1000 mm

Distance from edge of support or centre of flexible bearings
Distance av=1000 mm
Design shear resistance without shear reinforcement VRdc, as per
EN 1992-2 Clause 6.2.2 (6.2a)
Shear resistance VRdc=CRdc*k*(100*rho1*fckl)^(1/3)*bw*d/1000
=159.43 kN
The minimum shear resistance below is to EN 1992-2 Cl.6.2.2 (6.2b)
Minimum shear resistance VRdmin=vmin*bw*d/1000=117.13 kN
Shear resistance 159.43 kN is greater than minimum 117.13 kN
Shear reinforcement not provided.

Serviceability limit state calculations

Stresses to EN 1992-1-1 Cl.7.2 and crack widths to EN 1992-1-1 Cl.7.3

For stress calculations:
Moment from permanent effects Mps=12.75 kNm
Moment from transient actions Mvs=72.75 kNm
For crack width calculations:
Moment from quasi-permanent effects Mpc=12.75 kNm
Moment from associated transient actions Mvc=5 kNm

RESULTS FROM SERVICEABILITY LIMIT STATE ANALYSIS

Stresses to EN 1992-1-1 Cl.7.2
Stresses after minimal creep effects
Depth to Neutral Axis 58.893 mm

Concrete stresses

Cross-section	Stress at top N/mm²	Permissible Stress N/mm²
1	16.098	21

Reinforcement stresses (tension-negative, compression-positive)

Layer	Depth mm	Stress N/mm²	Permissible Stress N/mm²
1	200	-226.37	-400

Stresses under long term loading
Concrete age at time of loading agec=30 days
Relative humidity RH=80 %
Effective thickness ho=250 mm
Creep Coefficient (EN 1992-1-1 Cl.3.1.4(2))1.5108
Long term modulus Ecl(1)=Ecs(i)*(Mps+Mvs)/(Mvs+(1+cf(i))*Mps)
=27811 N/mm²
Depth to Neutral Axis 64 mm

Concrete stresses

Cross-section	Stress at top N/mm²	Permissible Stress N/mm²
1	14.955	21

Reinforcement stresses (tension-negative, compression-positive)

Layer	Depth mm	Stress N/mm²	Permissible Stress N/mm²
1	200	-228.53	-400

Crack widths EN 1992-1-1 Clause 7.3

Long term modulus Ecl(1)=Ecs(i)*(Mpc+Mvc)/(Mvc+(1+cf(i))*Mpc)
=16342 N/mm²

Depth to Neutral Axis 78.812 mm

Concrete stresses

Cross-section	Stress at top N/mm²	Permissible Stress N/mm²
1	2.5928	21

Reinforcement stresses (tension-negative, compression-positive)

Layer	Depth mm	Stress N/mm²	Permissible Stress N/mm²
1	200	-48.792	-400

(a) Crack widths without direct calculation (EN 1992-2 Cl.7.3.3)
Diameter of tensile reinf'ment bdia=16 mm
Spacing of tensile reinforcement bspac=100 mm
Limiting crack width (EN 1992-2 Table 7.101N) limcw=0.3 mm
Bar diameter 16 is less than maximum 32
Bar spacing 100 is less than maximum 300
Crack width less than limiting value 0.3 mm

Minimum reinforcement area (EN 1992-2 Clause 7.3.2)
Before first crack
Area of concrete in tensile zone 125000 mm²
Tensile fibre stress (BS EN 1992-2 Clause 7.3.2(105))3.21 N/mm²
Bar diameter 16 mm
Max. allowable stress (EN 1992-1-1 7.2N) sigs=TABLE 4 for bdia=16
=240 N/mm²
Min.r'ment area (EN 1992-2 Exp.7.1) smin=kc*k*fct(ncs)*Act/sigs
=668.74 mm²

(b) Crack widths with direct calculation (EN 1992-2 Cl.7.3.4)

Depth to Neutral Axis 78.812 mm
Depth of section 250 mm
Effective tension reinforcement
Area 2094 mm²
Centroid 200 mm
Effective tension depth (EN 1992-1-1 Cl.7.3.2(3))57.063 mm
Effective tension area 57063 mm²
Number of bar diameters nbdia=1
Bar diameter ph=16 mm
Nominal cover c=40 mm
Crack width cw=Srmax*mult=0.030757 mm

DESIGN SUMMARY

Char.cylinder compr.strength	**35 N/mm² (concrete)**
Char.yield strength of re'ment	**500 N/mm²**
Concrete material partial factor	**1.5**
Re'ment material partial factor	**1.15**
Shear resistance	**159.43 kN (no shear reinf'ment)**
Diameter of tensile re'ment	**16 mm**
Spacing of tensile re'ment	**100 mm**
Maximum permitted crack spacing	**210.12 mm**
Crack width	**0.030757 mm**
Limiting crack width	**0.3 mm**

Location: Ex2 - Voided reinforced concrete beam Ex 6.1.2

General reinforced concrete section

Concrete compressive strength fckm=35 N/mm²
Material factor gamc=1.5
Number of cross-sections ncs=3
Cross-section 1
Cross-section 2
Cross-section 3
Number of layers of reinf'ment nols=1
Characteristic yield strength fykm=500 N/mm²
Young's modulus of reinforcement Es=200000 N/mm²
Material factor for reinforcement gams=1.15
Reinforcement stress-strain relationship
Inclined top branch with strain limits
Ductility class is constant for whole section
Ductility Class (1=A, 2=B, 3=C) dcm=2
Strain at maximum force eukm=0.05
Multiplication factor km=1.08
Layer 1
Area of reinforcement As(1)=4581 mm²
Depth from compression face ds(1)=1425 mm

Ultimate limit state : flexure of general reinforced concrete section

The calculation is based on BS EN 1992-1-1 Clause 6.1(2)P.

RESULTS FROM ULTIMATE MOMENT ANALYSIS

Section moment resistance 2976.9 kNm
Depth to Neutral Axis 102.84 mm

Ultimate limit state : Shear calculations to EN 1992-1-1 Cl.6

Slab section:
Longitudinal Reinforcement
Area to be included in calcs. Asc(1)=4581 mm²
Concrete Section
Effective width for shear bw=400 mm

Distance from edge of support or centre of flexible bearings
Distance av=5000 mm
Design shear resistance without shear reinforcement VRdc, as per EN 1992-2 Clause 6.2.2 (6.2a)
Shear resistance VRdc=CRdc*k*(100*rho1*fckl)^(1/3)*bw*d/1000
=285.95 kN
The minimum shear resistance below is to EN 1992-2 Cl.6.2.2 (6.2b)
Minimum shear resistance VRdmin=vmin*bw*d/1000=190.22 kN
Shear resistance 285.95 kN is greater than minimum 190.22 kN
Shear reinforcement is links

```
Area at a cross-section           Asw=402 mm²
Shear r'ment inclination angle    alpha=90°
Maximum link spacing in accordance with EN 1992-1-1 Cl.9.3.2(4)
Spacing along member              s=200 mm
Limiting transverse spacing in accordance with EN 1992-1-1 Cl.9.3.2(5)
Limiting transverse spacing legs 1.50*d=2137.5 mm
Lever arm z                       z=1282.5 mm
Characteristic strength           fywk=500 N/mm²
Design value of shear resistance sustained by shear reinforcement VRds
Angle of inclination of concrete strut theta=45°
Design shear resistance sustained by yielding shear reinforcement
  VRds=(Asw/s)*z*((1/TAN(thetr)+1/TAN(alpr)))*fywd*SIN(alpr)/1000
      =1120.8 kN
Maximum shear force  VRdmax=alphcw*bw*z*v1*fcd*(CT+CA)/(1+CT^2)/1000
                           =3088.3 kN
Applied moment at Section 'B'     AM=2000 kNm
or bent up bars                   AV=800 kN
Area of long.reinf'ment provided  Aprov=4581 mm²
Tensile capacity of longitudinal reinforcement adequate.
Capacity provided 1991.7 kN exceeds required capacity of 1959.5 kN
```

DESIGN SUMMARY

Char.cylinder compr.strength	**35 N/mm² (concrete)**
Char.yield strength of re'ment	**500 N/mm²**
Concrete material partial factor	**1.5**
Re'ment material partial factor	**1.15**
Shear resistance	**285.95 kN (no shear reinf'ment)**
Shear resistance	**1120.8 kN (with shear reinf'ment)**

Location: Ex3 - Doubly reinforced concrete slab Ex 6.1.3

General reinforced concrete section

Concrete compressive strength	fckm=35 N/mm²
Material factor	gamc=1.5
Number of cross-sections	ncs=1
Cross-section 1	
Number of layers of reinf'ment	nols=2
Characteristic yield strength	fykm=500 N/mm²
Young's modulus of reinforcement	Es=200000 N/mm²
Material factor for reinforcement	gams=1.15
Reinforcement stress-strain relationship	
Inclined top branch with strain limits	
Ductility class is constant for whole section	
Ductility Class (1=A, 2=B, 3=C)	dcm=2
Strain at maximum force	eukm=0.05
Multiplication factor	km=1.08
Layer 1	
Area of reinforcement	As(1)=2693 mm²
Depth from compression face	ds(1)=50 mm
Layer 2	
Area of reinforcement	As(2)=8377 mm²
Depth from compression face	ds(2)=275 mm

Ultimate limit state : flexure of general reinforced concrete section

The calculation is based on BS EN 1992-1-1 Clause 6.1(2)P.

RESULTS FROM ULTIMATE MOMENT ANALYSIS

Section moment resistance	810.98 kNm
Depth to Neutral Axis	154.11 mm

Strain 0.0027454 at centroid of layer 2 is less than limiting strain 0.045

DESIGN SUMMARY

Char.cylinder compr.strength	**35 N/mm² (concrete)**
Char.yield strength of re'ment	**500 N/mm²**
Concrete material partial factor	**1.5**
Re'ment material partial factor	**1.15**

Location: Ex4 - Flanged reinforced concrete beam Ex 6.1.4

General reinforced concrete section

Concrete compressive strength	fckm=35 N/mm²
Material factor	gamc=1.5
Number of cross-sections	ncs=2
Cross-section 1	
Cross-section 2	
Number of layers of reinf'ment	nols=2
Characteristic yield strength	fykm=500 N/mm²
Young's modulus of reinforcement	Es=200000 N/mm²
Material factor for reinforcement	gams=1.15
Reinforcement stress-strain relationship	
Inclined top branch with strain limits	
Ductility class is constant for whole section	
Ductility Class (1=A, 2=B, 3=C)	dcm=2
Strain at maximum force	eukm=0.05
Multiplication factor	km=1.08
Layer 1	
Area of reinforcement	As(1)=7540 mm²
Depth from compression face	ds(1)=1140 mm
Layer 2	
Area of reinforcement	As(2)=7540 mm²
Depth from compression face	ds(2)=1220 mm

Ultimate limit state : flexure of general reinforced concrete section

The calculation is based on BS EN 1992-1-1 Clause 6.1(2)P.

RESULTS FROM ULTIMATE MOMENT ANALYSIS

Section moment resistance	7081.2 kNm
Depth to Neutral Axis	336.2 mm

Strain 0.0092007 at centroid of layer 2 is less than limiting strain 0.045
Strain 0.0083679 at centroid of layer 1 is less than limiting strain 0.045

DESIGN SUMMARY

Char.cylinder compr.strength	**35 N/mm² (concrete)**
Char.yield strength of re'ment	**500 N/mm²**
Concrete material partial factor	**1.5**
Re'ment material partial factor	**1.15**

Location: Ex5 - Reinforced concrete deck slab Ex 7.1

General reinforced concrete section

Concrete compressive strength fckm=35 N/mm²
Material factor gamc=1.5
Number of cross-sections ncs=1
Cross-section 1
Number of layers of reinf'ment nols=1
Characteristic yield strength fykm=500 N/mm²
Young's modulus of reinforcement Es=200000 N/mm²
Material factor for reinforcement gams=1.15
Reinforcement stress-strain relationship
Horizontal top branch with no strain limits
Layer 1
Area of reinforcement As(1)=2010 mm²
Depth from compression face ds(1)=192 mm

Ultimate limit state : flexure of general reinforced concrete section

The calculation is based on BS EN 1992-1-1 Clause 6.1(2)P.

RESULTS FROM ULTIMATE MOMENT ANALYSIS

Section moment resistance 151.2 kNm
Depth to Neutral Axis 54.432 mm

Ultimate limit state : Shear calculations to EN 1992-1-1 Cl.6

Slab section:
Longitudinal Reinforcement
Area to be included in calcs. Asc(1)=2010 mm²
Concrete Section
Effective width for shear bw=1000 mm

Distance from edge of support or centre of flexible bearings
Distance av=1000 mm
Design shear resistance without shear reinforcement VRdc, as per
EN 1992-2 Clause 6.2.2 (6.2a)
Shear resistance VRdc=CRdc*k*(100*rho1*fckl)^(1/3)*bw*d/1000
=153.05 kN
The minimum shear resistance below is to EN 1992-2 Cl.6.2.2 (6.2b)
Minimum shear resistance VRdmin=vmin*bw*d/1000=112.45 kN
Shear resistance 153.05 kN is greater than minimum 112.45 kN
Shear reinforcement not provided.

Serviceability limit state calculations

Stresses to EN 1992-1-1 Cl.7.2 and crack widths to EN 1992-1-1 Cl.7.3

For stress calculations:
Moment from permanent effects Mps=12.75 kNm
Moment from transient actions Mvs=72.75 kNm
For crack width calculations:
Moment from quasi-permanent effects Mpc=12.75 kNm
Moment from associated transient actions Mvc=5 kNm

RESULTS FROM SERVICEABILITY LIMIT STATE ANALYSIS

Stresses to EN 1992-1-1 Cl.7.2
Stresses after minimal creep effects
Depth to Neutral Axis 56.533 mm

Concrete stresses

Cross-section	Stress at top N/mm²	Permissible Stress N/mm²
1	17.468	21

Reinforcement stresses (tension-negative, compression-positive)

Layer	Depth mm	Stress N/mm²	Permissible Stress N/mm²
1	192	-245.66	-400

Stresses under long term loading
Concrete age at time of loading agec=30 days
Relative humidity RH=80 %
Effective thickness ho=250 mm
Creep Coefficient (EN 1992-1-1 Cl.3.1.4(2))1.5108
Long term modulus Ecl(1)=Ecs(i)*(Mps+Mvs)/(Mvs+(1+cf(i))*Mps)
=27811 N/mm²
Depth to Neutral Axis 61.437 mm

Concrete stresses

Cross-section	Stress at top N/mm²	Permissible Stress N/mm²
1	16.227	21

Reinforcement stresses (tension-negative, compression-positive)

Layer	Depth mm	Stress N/mm²	Permissible Stress N/mm²
1	192	-248	-400

Crack widths EN 1992-1-1 Clause 7.3

Long term modulus Ecl(1)=Ecs(i)*(Mpc+Mvc)/(Mvc+(1+cf(i))*Mpc)
=16342 N/mm²

Depth to Neutral Axis 75.658 mm

Concrete stresses

Cross-section	Stress at top N/mm²	Permissible Stress N/mm²
1	2.8136	21

Reinforcement stresses (tension-negative, compression-positive)

Layer	Depth mm	Stress N/mm²	Permissible Stress N/mm²
1	192	-52.95	-400

(a) Crack widths without direct calculation (EN 1992-2 Cl.7.3.3)
Diameter of tensile reinf'ment bdia=16 mm
Spacing of tensile reinforcement bspac=100 mm
Limiting crack width (EN 1992-2 Table 7.101N) limcw=0.3 mm
Bar diameter 16 is less than maximum 32
Bar spacing 100 is less than maximum 300
Crack width less than limiting value 0.3 mm

Minimum reinforcement area (EN 1992-2 Clause 7.3.2)
Before first crack
Area of concrete in tensile zone 125000 mm²
Tensile fibre stress (BS EN 1992-2 Clause 7.3.2(105))3.21 N/mm²
Bar diameter 16 mm
Max. allowable stress (EN 1992-1-1 7.2N) sigs=TABLE 4 for bdia=16
=240 N/mm²
Min.r'ment area (EN 1992-2 Exp.7.1) smin=kc*k*fct(ncs)*Act/sigs
=668.74 mm²

(b) Crack widths with direct calculation (EN 1992-2 Cl.7.3.4)

Depth to Neutral Axis 75.658 mm
Depth of section 250 mm
Effective tension reinforcement
Area 2010 mm²
Centroid 192 mm
Effective tension depth (EN 1992-1-1 Cl.7.3.2(3))58.114 mm
Effective tension area 58114 mm²
Number of bar diameters nbdia=1
Bar diameter ph=16 mm
Nominal cover c=50 mm
Crack width cw=Srmax*mult=0.039497 mm

DESIGN SUMMARY

Char.cylinder compr.strength	**35 N/mm² (concrete)**
Char.yield strength of re'ment	**500 N/mm²**
Concrete material partial factor	**1.5**
Re'ment material partial factor	**1.15**
Shear resistance	**153.05 kN (no shear reinf'ment)**
Diameter of tensile re'ment	**16 mm**
Spacing of tensile re'ment	**100 mm**
Maximum permitted crack spacing	**248.64 mm**
Crack width	**0.039497 mm**
Limiting crack width	**0.3 mm**

Location: Ex6 - Beam example with shear links

General reinforced concrete section

Concrete compressive strength fckm=35 N/mm²
Material factor gamc=1.5
Number of cross-sections ncs=1
Cross-section 1
Number of layers of reinf'ment nols=2
Characteristic yield strength fykm=500 N/mm²
Young's modulus of reinforcement Es=200000 N/mm²
Material factor for reinforcement gams=1.15
Reinforcement stress-strain relationship
Horizontal top branch with no strain limits
Layer 1
Area of reinforcement As(1)=1256 mm²
Depth from compression face ds(1)=230 mm
Layer 2
Area of reinforcement As(2)=1256 mm²
Depth from compression face ds(2)=70 mm

Ultimate limit state : flexure of general reinforced concrete section

The calculation is based on BS EN 1992-1-1 Clause 6.1(2)P.

RESULTS FROM ULTIMATE MOMENT ANALYSIS

Section moment resistance 108.53 kNm
Depth to Neutral Axis 75.336 mm

Ultimate limit state : Shear calculations to EN 1992-1-1 Cl.6

Beam section:
Longitudinal Reinforcement
Number of layers sl=1
Area to be included in calcs. Asc(1)=1256 mm²
Concrete Section
Effective width for shear bw=400 mm

Distance from edge of support or centre of flexible bearings
Distance av=500 mm
Design shear resistance without shear reinforcement VRdc, as per
EN 1992-2 Clause 6.2.2 (6.2a)
Shear resistance VRdc=CRdc*k*(100*rho1*fckl)^(1/3)*bw*d/1000
=77.419 kN
The minimum shear resistance below is to EN 1992-2 Cl.6.2.2 (6.2b)
Minimum shear resistance VRdmin=vmin*bw*d/1000=51.177 kN
Shear resistance 77.419 kN is greater than minimum 51.177 kN
Beam Section:
Shear reinforcement is links

```
Area at a cross-section           Asw=314 mm²
Shear r'ment inclination angle    alpha=45°
Maximum spacing for links as per EN 1992-1-1 Cl.9.2.2(6)
Spacing along member              s=100 mm
Limiting transverse spacing as per EN 1992-1-1 Cl.9.2.2(8)
Limiting transverse spacing legs 0.75*d and less than 600mm 172.5 mm
Lever arm z                       z=207 mm
Characteristic strength           fywk=500 N/mm²
Angle of inclination of concrete strut theta=22°
Design shear resistance sustained by yielding shear reinforcement
  VRds=(Asw/s)*z*((1/TAN(thetr)+1/TAN(alpr)))*fywd*SIN(alpr)/1000
      =694.42 kN
Maximum shear force  VRdmax=alphcw*bw*z*v1*fcd*(CT+CA)/(1+CT^2)/1000
                           =314.27 kN
Design shear resistance sustained by yielding shear reinforcement
exceeds maximum shear resistance from crushing of concrete struts
Revised shear resistance          VRds=VRdmax=314.27 kN
```

DESIGN SUMMARY

Char.cylinder compr.strength	**35 N/mm² (concrete)**
Char.yield strength of re'ment	**500 N/mm²**
Concrete material partial factor	**1.5**
Re'ment material partial factor	**1.15**
Shear resistance	**77.419 kN (no shear reinf'ment)**
Shear resistance	**314.27 kN (with shear reinf'ment)**

Copyright 1986-2024 Fitzroy Systems Ltd.

Location: Metre width strip of 500mm deep slab

General reinforced concrete section to Departmental Standard BD 44/15

Number of cross-sections	ncs=1
Concrete strength	fcum=40 N/mm²
Cross-section 1	
Number of layers of reinforcement	nols=2
Reinforcement strength	fym=460 N/mm²
Young's modulus of reinforcement	Em=200000 N/mm²
Layer 1 :	
Area of reinforcement	As(1)=4021 mm²
Depth from compression face	ds(1)=444 mm
Layer 2 :	
Area of reinforcement	As(2)=402 mm²
Depth from compression face	ds(2)=50 mm

Ultimate limit state : flexure of general reinforced concrete section

Factor for reinforcement	gms=1.15
Factor for concrete	gmc=1.5

RESULTS FROM ULTIMATE MOMENT ANALYSIS

Moment of Resistance	**645.86 kNm**
Depth to Neutral Axis	**94.067 mm**

Shear calculations

Factor for reinforcement	gms=1.15
Factor for concrete	gmc=1.5
Factor for shear in concrete	gmv=1.25
Breadth of section for shear	bs=1000 mm
Effective depth for shear	ds=444 mm
Distance of section from support	av=1000 mm
Inclination angle of shear r'ment	alpha=75°
Area of shear reinforcement	Asv=400 mm²
Strength of shear reinforcement	fyv=460 N/mm²
In direction of span	sv1=300 mm
At right angles to span	sv2=400 mm
Value of k for calculations	k=1.2679
Area of tension reinforcement	As=1000 mm²
Strength of concrete	fcuv=40 N/mm²
Constant KVC	KVC=0.24

Applied moment at Section 'S'	AM=633 kNm
Area of long. r'ment provided	Aprov=4021 mm²
Longitudinal r'ment strength	fyl=460 N/mm²

RESULTS FROM SHEAR ANALYSIS

Concrete shear capacity	**182.59 kN**
Shear reinforcement capacity	**290.02 kN**
Total shear capacity	**472.61 kN**

Serviceability limit state calculations

for stresses to Cl. 4.1.1.3. and crack widths

to BD 44/15 Appendix A Clause 5.8.8.2

Factored dead load moment	dlm=200 kNm
Factored live load moment	llm=100 kNm
Diameter	bd1=32 mm
Spacing	bspac=150 mm
Breadth	bc=1000 mm

RESULTS FROM SERVICEABILITY LIMIT STATE ANALYSIS

Depth to Neutral Axis 149.34 mm

Concrete stresses

Cross-section	Stress at top N/mm²	Permissible N/mm²
1	9.848	20

Reinforcement stresses (tension-negative, compression-positive)

Layer	Depth mm	Stress N/mm²	Permissible N/mm²
1	444	-189.26	345
2	50	63.807	345

Design crack width 0.16801 mm
Design crack width should be less than the values in Table 1.

Copyright 1986-2024 Fitzroy Systems Ltd.

Location: I-beam section

General reinforced concrete section to Departmental Standard

BD 44/15

Number of cross-sections ncs=5
Cross-section 1
Concrete strength fcu(1)=40 N/mm²
Cross-section 2
Concrete strength fcu(2)=30 N/mm²
Cross-section 3
Concrete strength fcu(3)=30 N/mm²
Cross-section 4
Concrete strength fcu(4)=30 N/mm²
Cross-section 5
Concrete strength fcu(5)=30 N/mm²
Number of layers of reinforcement nols=4
Layer 1 :
Area of reinforcement As(1)=678 mm²
Depth from compression face ds(1)=50 mm
Reinforcement strength fy(1)=250 N/mm²
Young's modulus for reinforcement E(1)=190000 N/mm²
Layer 2 :
Area of reinforcement As(2)=678 mm²
Depth from compression face ds(2)=150 mm
Reinforcement strength fy(2)=250 N/mm²
Young's modulus for reinforcement E(2)=190000 N/mm²
Layer 3 :
Area of reinforcement As(3)=3927 mm²
Depth from compression face ds(3)=850 mm
Reinforcement strength fy(3)=460 N/mm²
Young's modulus for reinforcement E(3)=200000 N/mm²
Layer 4 :
Area of reinforcement As(4)=6434 mm²
Depth from compression face ds(4)=950 mm
Reinforcement strength fy(4)=460 N/mm²
Young's modulus for reinforcement E(4)=200000 N/mm²

Ultimate limit state : flexure of general reinforced concrete section

Factor for reinforcement	gms=1.15
Factor for concrete	gmc=1.5

RESULTS FROM ULTIMATE MOMENT ANALYSIS

Moment of Resistance	**3321.2 kNm**
Depth to Neutral Axis	**324.55 mm**

Shear calculations

Factor for reinforcement	gms=1.15
Factor for concrete	gmc=1.5
Factor for shear in concrete	gmv=1.25
Breadth of section for shear	bs=200 mm
Effective depth for shear	ds=912.5 mm
Distance of section from support	av=1500 mm
Inclination angle of shear r'ment	alpha=90°
Area of shear reinforcement	Asv=402 mm²
Strength of shear reinforcement	fyv=460 N/mm²
In direction of span	sv1=650 mm
At right angles to span	sv2=250 mm
Area of tension reinforcement	As=3200 mm²
Strength of concrete	fcuv=30 N/mm²
Constant KVC	KVC=0.24
Applied moment at Section 'S'	AM=1000 kNm
Area of long. r'ment provided	Aprov=3200 mm²
Longitudinal r'ment strength	fyl=460 N/mm²

RESULTS FROM SHEAR ANALYSIS

Concrete shear capacity	**137.25 kN**
Shear reinforcement capacity	**225.74 kN**
Total shear capacity	**362.99 kN**

Serviceability limit state calculations for stresses to Cl. 4.1.1.3. and crack widths to BD 44/15 Appendix A Clause 5.8.8.2

Factored dead load moment	dlm=400 kNm
Factored live load moment	llm=450 kNm

controlling the crack width cre=30 mm
Diameter bd1=32 mm
Spacing bspac=125 mm

RESULTS FROM SERVICEABILITY LIMIT STATE ANALYSIS

Depth to Neutral Axis 332.18 mm

Concrete stresses

Cross-section	Stress at top N/mm²	Permissible N/mm²
1	6.715	20
2	2.4378	15
3	0.59353	15

Reinforcement stresses (tension-negative, compression-positive)

Layer	Depth mm	Stress N/mm²	Permissible N/mm²
1	50	46.016	187.5
2	150	29.709	187.5
3	850	-88.886	345
4	950	-106.05	345

Design crack width 0.10529 mm
Design crack width should be less than the values in Table 1.

Copyright 1986-2024 Fitzroy Systems Ltd.

Location: 500mm wide beam section

General reinforced concrete section to Departmental Standard BD 44/15

Number of cross-sections	ncs=1
Concrete strength	fcum=18 N/mm²
Cross-section 1	
Number of layers of reinforcement	nols=2
Young's modulus of reinforcement	Em=200000 N/mm²
Layer 1 :	
Area of reinforcement	As(1)=678 mm²
Depth from compression face	ds(1)=50 mm
Reinforcement strength	fy(1)=250 N/mm²
Layer 2 :	
Area of reinforcement	As(2)=3927 mm²
Depth from compression face	ds(2)=950 mm
Reinforcement strength	fy(2)=460 N/mm²

Ultimate limit state : flexure of general reinforced concrete section

Factor for reinforcement	gms=1.15
Factor for concrete	gmc=1.5

RESULTS FROM ULTIMATE MOMENT ANALYSIS

Moment of Resistance	**1227.5 kNm**
Depth to Neutral Axis	**388.95 mm**

Shear calculations

Factor for reinforcement	gms=1.15
Factor for concrete	gmc=1.5
Factor for shear in concrete	gmv=1.25
Breadth of section for shear	bs=500 mm
Effective depth for shear	ds=950 mm
Distance of section from support	av=1500 mm
Inclination angle of shear r'ment	alpha=75°
Area of shear reinforcement	Asv=804 mm²
Strength of shear reinforcement	fyv=460 N/mm²
In direction of span	sv1=750 mm
At right angles to span	sv2=125 mm
Value of k for calculations	k=1.2679
Area of tension reinforcement	As=3000 mm²
Strength of concrete	fcuv=18 N/mm²
Constant KVC	KVC=0.24

Applied moment at Section 'S'	AM=1000 kNm
Area of long. r'ment provided	Aprov=3200 mm²
Longitudinal r'ment strength	fyl=460 N/mm²

RESULTS FROM SHEAR ANALYSIS

Concrete shear capacity	**221.06 kN**
Shear reinforcement capacity	**498.91 kN**
Total shear capacity	**719.98 kN**

Serviceability limit state calculations

for stresses to Cl. 4.1.1.3. and crack widths

to BD 44/15 Appendix A Clause 5.8.8.2

Factored dead load moment	dlm=200 kNm
Factored live load moment	llm=300 kNm
Diameter	bd1=32 mm
Spacing	bspac=150 mm

RESULTS FROM SERVICEABILITY LIMIT STATE ANALYSIS

Depth to Neutral Axis 307.38 mm

Concrete stresses

Cross-section	Stress at top N/mm²	Permissible N/mm²
1	7.1151	9

Reinforcement stresses (tension-negative, compression-positive)

Layer	Depth mm	Stress N/mm²	Permissible N/mm²
1	50	59.913	187.5
2	950	-149.59	345

Design crack width 0.15437 mm
Design crack width should be less than the values in Table 1.

Copyright 1986-2024 Fitzroy Systems Ltd.

Location: 190mm deep slab section

General reinforced concrete section to Departmental Standard BD 44/15

Number of cross-sections	ncs=1
Concrete strength	fcum=30 N/mm²
Cross-section 1	
Number of layers of reinforcement	nols=1
Reinforcement strength	fym=460 N/mm²
Young's modulus of reinforcement	Em=200000 N/mm²
Layer 1 :	
Area of reinforcement	As(1)=452 mm²
Depth from compression face	ds(1)=140 mm

Ultimate limit state : flexure of general reinforced concrete section

Factor for reinforcement	gms=1.15
Factor for concrete	gmc=1.5

RESULTS FROM ULTIMATE MOMENT ANALYSIS

Moment of Resistance	**22.856 kNm**
Depth to Neutral Axis	**30.111 mm**

Shear calculations

Factor for reinforcement	gms=1.15
Factor for concrete	gmc=1.5
Factor for shear in concrete	gmv=1.25
Breadth of section for shear	bs=500 mm
Effective depth for shear	ds=140 mm
Distance of section from support	av=2000 mm
Area of tension reinforcement	As=452 mm²
Strength of concrete	fcuv=30 N/mm²
Constant KVC	KVC=0.24

RESULTS FROM SHEAR ANALYSIS

Concrete shear capacity	**49.572 kN**

Shear reinforcement not assessed for a slab less than 200mm thick

Copyright 1986-2024 Fitzroy Systems Ltd.

Location: 300mm deep slab section

General reinforced concrete section to Departmental Standard BD 44/15

Number of cross-sections	ncs=1
Concrete strength	fcum=30 N/mm²
Cross-section 1	
Number of layers of reinforcement	nols=1
Reinforcement strength	fym=460 N/mm²
Young's modulus of reinforcement	Em=200000 N/mm²
Layer 1 :	
Area of reinforcement	As(1)=1000 mm²
Depth from compression face	ds(1)=250 mm

Ultimate limit state : flexure of general reinforced concrete section

Factor for reinforcement	gms=1.15
Factor for concrete	gmc=1.5

RESULTS FROM ULTIMATE MOMENT ANALYSIS

Moment of Resistance	**87.982 kNm**
Depth to Neutral Axis	**66.613 mm**

Shear calculations

Factor for reinforcement	gms=1.15
Factor for concrete	gmc=1.5
Factor for shear in concrete	gmv=1.25
Breadth of section for shear	bs=500 mm
Effective depth for shear	ds=250 mm
Distance of section from support	av=500 mm
Area of tension reinforcement	As=1000 mm²
Strength of concrete	fcuv=30 N/mm²
Constant KVC	KVC=0.24

RESULTS FROM SHEAR ANALYSIS

Concrete shear capacity	**82.239 kN**

Shear reinforcement not provided

Location: 500mm thick slab

Early Thermal Cracking in Concrete to BD 28/87 (Amd. No 1)

Calculations for distribution reinforcement for the control of early thermal cracking of reinforced and prestressed post-tensioned concrete members.

Area of effective concrete	Ac=2.5E6 mm²
Char tensile strength of r'ment	fy=460 N/mm²
Char cube strength of concrete	fcu=40 N/mm²
Ratio of (fct/fb)	br=0.67
Nominal diameter of r'ment	phi=16 mm
Permissible crack width	w=0.25 mm

Short-term fall in temperature	T1=35 °C
Long-term fall in temperature	T2=20 °C
Restraint factor	R=0.6

Minimum r'ment area to ensure acceptable crack widths (Equation 3)
Asw=br*Ac*phi*(R*(esh*1E-6+eth)-0.5*eult*1E-6)/(2*w)=14836 mm²
Required reinforcement area, As, is the greater value obtained from Equation 2 and Equation 3.
Area from Equation 3 is greater than that from Equation 2
Required area from Equation 3 As=Asw=14836 mm²
Reinforcement that is present for other purposes may be included as part of the area of reinforcement As=14836 mm² (Section 5.10).
Arrangement of reinforcement - External edge restraint (Section 6.2)

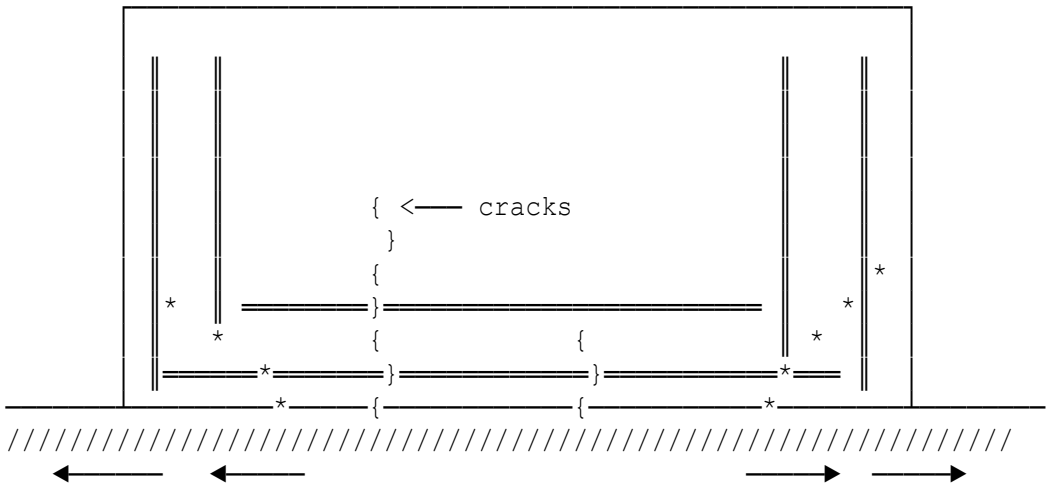

═══	reinforcement for edge restraint
‖	reinforcement for warping restraint
{	cracking due to edge restraint
*	cracking due to warping restraint

Reinforcement shall be provided parallel to the restraint. Where the length to height ratio exceeds 2:1 this reinforcement shall be provided over the full height of the section. When the length to height ratio is 2:1 or less, and there is no end restraint, reinforcement need only be placed in the half of the section adjacent to the restraint. The area of reinforcement, As=14836 mm² shall be provided in the faces of the section.

In addition to the reinforcement parallel to the edge restraint, reinforcement of the same unit area shall also be provided to control the effects of warping restraint at the ends. This reinforcement shall be perpendicular to the edge restraint and be provided over a length at the end equivalent to the lesser of the height of the section, or 0.2 times the overall length.

SUMMARY **Section is subject to external edge restraint**
Reinforcement As=14836 mm² should be arranged
in accordance with Section 6.2.

Copyright 1986-2024 Fitzroy Systems Ltd.

Location: Ex1 - Consider a 500mm thick slab (edge restraint)

Early Thermal Cracking in Concrete - EN 1992-1-1 and EN 1992-3

Calculations for distribution reinforcement for the control of early thermal cracking of reinforced & prestressed post-tensioned concrete members. Both BS EN 1992-2:2005 and BS EN 1992-1-1:2004 do not provide guidance on early thermal cracking, but BS EN 1992-3:2006 for liquid retaining and containing structures does.

Overall depth of concrete section h=500 mm
Char.tensile strength (reinf'ment) fyk=500 N/mm²

The minimum reinforcement area to control crack spacing will be evaluated in accordance with BS EN 1992-1-1:2004 Clause 7.3.2(2).
The tensile zone is that part of the section which is calculated to be in tension just before formation of the first crack. The section behaves elastically until the tensile fibre stress reaches fctm.
For a rectangular section, the area in tension is half the slab depth.
Area of conc. within tensile zone Act=b*h/2=250000 mm²/m
Stress distribution coefficient kc=1
The coefficient (k) below allows for the effect of non-uniform self equilibrating stresses, which lead to a reduction of restraint forces.

Coefficient (Clause 7.3.2(2))	k'=TABLE 6.13 for h=500 =0.86
Coefficient value to be adopted	k=0.86
Minimum reinforcement area	Asmin=kc*k*Act*fcteff/fyk=1300.2 mm²/m
Permissible crack width	wk=0.25 mm
Temp.fall: hydrat.peak & ambient	T1=35 °C
Long-term drop in temperature	T2=20 °C
Bond coefficient k1	k1=0.8

Crack inducing strain

Coefficient of thermal expansion	aTc=12 με/°C
Restraint factor (short-term)	R1=0.5 (thermal)
Restraint factor (long-term)	R2=0.5 (thermal)
Restraint factor (long-term)	R3=0.5 (drying)
Shrinkage strain (short-term)	ecas=16.6 με
Shrinkage strain (long-term)	ecal=55 με
Tensile strain capacity	ectus=78 με (short-term)
Tensile strain capacity	ectul=111.2 με (long-term)

The coefficient below deals with the effect of stress relaxation due to creep under sustained loading.

Creep coefficient	K1=1
Short-term crack inducing strain	ecrs=K1*(aTc*T1+ecas)*R1-0.5*ectus =179.3 με
Long-term crack inducing strain	ecrl=K1*(c1+c2+c3)-0.5*ectul=469.9 με

Check crack width

Min steel area each face	Asmin=1300.2 mm²/m
Diameter of distribution steel	dia=16 mm
Spacing of distribution steel	spacd=150 mm

Area of distribution steel	Asdis=INT(250*PI*dia^2/spacd) =1340 mm²/m
Cover to reinforcement	c=30 mm
Design crack width (short-term)	wks=srmax*ecrs/10^6=0.08744 mm
Design crack width (long-term)	wkl=srmax*ecrl/10^6=0.22916 mm

The short-term crack width 0.08744 mm is less than the permissible value of 0.25 mm hence satisfactory.
The long-term crack width 0.22916 mm is less than the permissible value of 0.25 mm hence satisfactory.

Arrangement of reinforcement

(External edge restraint (Fig L.1(a), EN 1992-3))

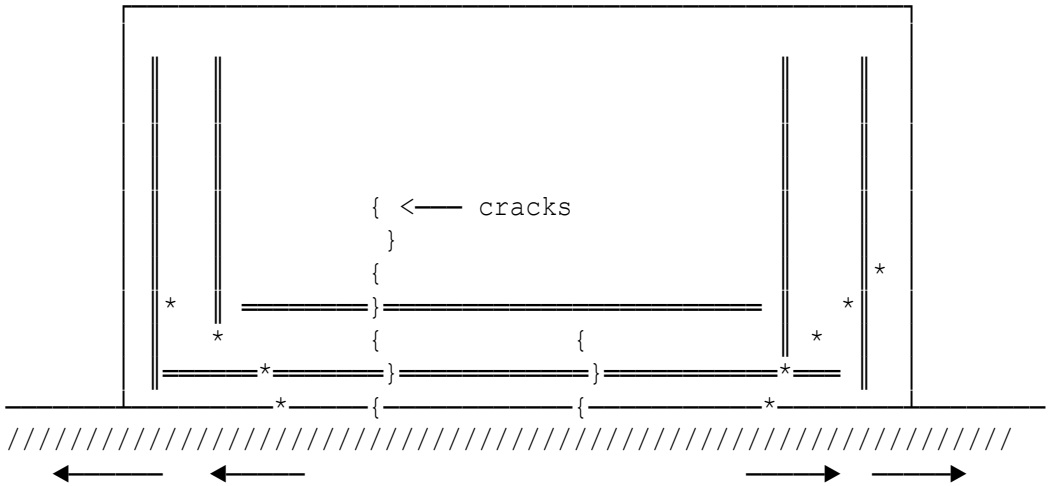

═══	reinforcement for edge restraint
‖	reinforcement for warping restraint
{	cracking due to edge restraint
*	cracking due to warping restraint

Reinforcement shall be provided parallel to the restraint. Where the length to height ratio exceeds 2:1 this reinforcement shall be provided over the full height of the section. When the length to height ratio is 2:1 or less, and there is no end restraint, reinforcement need only be placed in the half of the section adjacent to the restraint. The area of reinforcement, As=1340 mm²/m shall be provided in the faces of the section.
In addition to the reinforcement parallel to the edge restraint, reinforcement of the same unit area shall also be provided to control the effects of warping restraint at the ends. This reinforcement shall be perpendicular to the edge restraint and be provided over a length at the end equivalent to the lesser of the height of the section, or 0.2 times the overall length.

SUMMARY **Section is subject to (external) edge restraint. Reinforcement As=1340 mm²/m should be provided parallel to the edge restraint. Furthermore provide warping reinforcement.**

Copyright 1986-2024 Fitzroy Systems Ltd.

Location: Ex2 - Consider a 1000mm thick slab (edge restraint)

Early Thermal Cracking in Concrete - EN 1992-1-1 and EN 1992-3

Calculations for distribution reinforcement for the control of early thermal cracking of reinforced & prestressed post-tensioned concrete members. Both BS EN 1992-2:2005 and BS EN 1992-1-1:2004 do not provide guidance on early thermal cracking, but BS EN 1992-3:2006 for liquid retaining and containing structures does.

Overall depth of concrete section h=1000 mm
Char.tensile strength (reinf'ment) fyk=500 N/mm²

The minimum reinforcement area to control crack spacing will be evaluated in accordance with BS EN 1992-1-1:2004 Clause 7.3.2(2).
The tensile zone is that part of the section which is calculated to be in tension just before formation of the first crack. The section behaves elastically until the tensile fibre stress reaches fctm.
For a rectangular section, the area in tension is half the slab depth.
Area of conc. within tensile zone Act=b*h/2=500000 mm²/m
Stress distribution coefficient kc=1
The coefficient (k) below allows for the effect of non-uniform self equilibrating stresses, which lead to a reduction of restraint forces.

Coefficient (Clause 7.3.2(2))	k'=TABLE 6.13 for h=1000 =0.65
Coefficient value to be adopted	k=0.65
Minimum reinforcement area	Asmin=kc*k*Act*fcteff/fyk=1798.1 mm²/m
Permissible crack width	wk=0.25 mm
Temp.fall: hydrat.peak & ambient	T1=20 °C
Long-term drop in temperature	T2=5 °C
Bond coefficient k1	k1=0.8

Crack inducing strain

Coefficient of thermal expansion	aTc=10 με/°C
Restraint factor (short-term)	R1=0.5 (thermal)
Restraint factor (long-term)	R2=0.2 (thermal)
Restraint factor (long-term)	R3=0.2 (drying)
Shrinkage strain (short-term)	ecas=13.6 με
Shrinkage strain (long-term)	ecal=45 με
Tensile strain capacity	ectus=73.6 με (short-term)
Tensile strain capacity	ectul=104.8 με (long-term)

The coefficient below deals with the effect of stress relaxation due to creep under sustained loading.

Creep coefficient	K1=1
Short-term crack inducing strain	ecrs=K1*(aTc*T1+ecas)*R1-0.5*ectus =70 με
Long-term crack inducing strain	ecrl=K1*(c1+c2+c3)-0.5*ectul=147.3 με

Check crack width

Min steel area each face	Asmin=1798.1 mm²/m
Diameter of distribution steel	dia=16 mm
Spacing of distribution steel	spacd=111 mm

Area of distribution steel	Asdis=INT(250*PI*dia^2/spacd) =1811 mm²/m
Cover to reinforcement	c=72 mm
Design crack width (short-term)	wks=srmax*ecrs/10^6=0.05919 mm
Design crack width (long-term)	wkl=srmax*ecrl/10^6=0.12455 mm

The short-term crack width 0.05919 mm is less than the permissible value of 0.25 mm hence satisfactory.
The long-term crack width 0.12455 mm is less than the permissible value of 0.25 mm hence satisfactory.

Arrangement of reinforcement

(External edge restraint (Fig L.1(a), EN 1992-3))

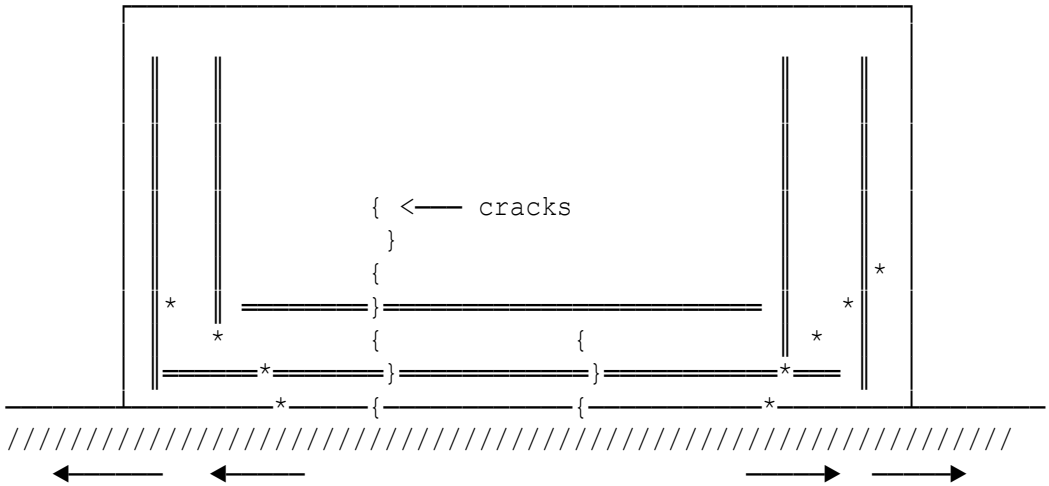

═══	reinforcement for edge restraint
‖	reinforcement for warping restraint
{	cracking due to edge restraint
*	cracking due to warping restraint

Reinforcement shall be provided parallel to the restraint. Where the length to height ratio exceeds 2:1 this reinforcement shall be provided over the full height of the section. When the length to height ratio is 2:1 or less, and there is no end restraint, reinforcement need only be placed in the half of the section adjacent to the restraint. The area of reinforcement, As=1811 mm²/m shall be provided in the faces of the section.
In addition to the reinforcement parallel to the edge restraint, reinforcement of the same unit area shall also be provided to control the effects of warping restraint at the ends. This reinforcement shall be perpendicular to the edge restraint and be provided over a length at the end equivalent to the lesser of the height of the section, or 0.2 times the overall length.

SUMMARY **Section is subject to (external) edge restraint. Reinforcement As=1811 mm²/m should be provided parallel to the edge restraint. Furthermore provide warping reinforcement.**

Copyright 1986-2024 Fitzroy Systems Ltd.

Location: Ex3 - Consider a 300mm thick slab (end restraint)

Early Thermal Cracking in Concrete - EN 1992-1-1 and EN 1992-3

Calculations for distribution reinforcement for the control of early thermal cracking of reinforced & prestressed post-tensioned concrete members. Both BS EN 1992-2:2005 and BS EN 1992-1-1:2004 do not provide guidance on early thermal cracking, but BS EN 1992-3:2006 for liquid retaining and containing structures does.

Overall depth of concrete section h=300 mm
Char.tensile strength (reinf'ment) fyk=500 N/mm²

The minimum reinforcement area to control crack spacing will be evaluated in accordance with BS EN 1992-1-1:2004 Clause 7.3.2(2).
The tensile zone is that part of the section which is calculated to be in tension just before formation of the first crack. The section behaves elastically until the tensile fibre stress reaches fctm.
For a rectangular section, the area in tension is half the slab depth.
Area of conc. within tensile zone Act=b*h/2=150000 mm²/m
Stress distribution coefficient kc=1
The coefficient (k) below allows for the effect of non-uniform self equilibrating stresses, which lead to a reduction of restraint forces.
Coefficient (Clause 7.3.2(2)) k'=TABLE 6.13 for h=300
=1
Coefficient value to be adopted k=1
Minimum reinforcement area Asmin=kc*k*Act*fcteff/fyk=868.94 mm²/m
Permissible crack width wk=0.25 mm

Bond coefficient k1 k1=0.8

Crack inducing strain

Short-term crack inducing strain ecrs=0.5*ae*kc*k*fcteff*(1+1/(ae*p))
/Es=0.23282E-3 με
Long-term crack inducing strain ecrl=0.5*ae*kc*k*fcteff*(1+1/(ae*p))
/Es=0.39028E-3 με

Check crack width

Diameter of distribution steel dia=20 mm
Spacing of distribution steel spacd=INT(250*PI*dia^2/As1)=100 mm
Area of distribution steel Asdis=As1=3140 mm²/m
Cover to reinforcement c=70 mm
Design crack width (short-term) wks=srmax*ecrs=0.13104 mm
Design crack width (long-term) wkl=srmax*ecrl=0.21966 mm
The short-term crack width 0.13104 mm is less than the permissible value of 0.25 mm hence satisfactory.
The long-term crack width 0.21966 mm is less than the permissible value of 0.25 mm hence satisfactory.

Arrangement of reinforcement

(External end restraint (Fig L.1(b), EN 1992-3))

```
        ======== Reinforcement for end restraint

 ---------------------------------------------------------------
        \|        {                      {                    |/
        \| =========}==================}========             |/
 <----  \|         {                  {                       |/ ---->
        \|     ======{=====================                   |/
        \|                              {                     |/
        \|                              {                     |/
 <----  \|         {                    {                     |/ ---->
        \|        { <---cracks                                |/
        \|                                                    |/
        \|   ======{=================={======                 |/
        \|       }                    }                       |/
 <----  \| ======{======================={========           |/ ---->
        \|     }                          }                  |/
 ---------------------------------------------------------------
```

SUMMARY **Section is subject to (external) end restraint. Reinforcement As=3140 mm²/m should be provided throughout the member perpendicular to the restraining edge.**

Location: Ex4 - Consider a 300mm thick slab (end restraint)

Early Thermal Cracking in Concrete - EN 1992-1-1 and EN 1992-3

Calculations for distribution reinforcement for the control of early thermal cracking of reinforced & prestressed post-tensioned concrete members. Both BS EN 1992-2:2005 and BS EN 1992-1-1:2004 do not provide guidance on early thermal cracking, but BS EN 1992-3:2006 for liquid retaining and containing structures does.

Overall depth of concrete section h=300 mm
Char.tensile strength (reinf'ment) fyk=500 N/mm²

The minimum reinforcement area to control crack spacing will be evaluated in accordance with BS EN 1992-1-1:2004 Clause 7.3.2(2).
The tensile zone is that part of the section which is calculated to be in tension just before formation of the first crack. The section behaves elastically until the tensile fibre stress reaches fctm.
For a rectangular section, the area in tension is half the slab depth.
Area of conc. within tensile zone Act=b*h/2=150000 mm²/m
Stress distribution coefficient kc=1
The coefficient (k) below allows for the effect of non-uniform self equilibrating stresses, which lead to a reduction of restraint forces.
Coefficient (Clause 7.3.2(2)) k'=TABLE 6.13 for h=300
=1
Coefficient value to be adopted k=1
Minimum reinforcement area Asmin=kc*k*Act*fcteff/fyk=868.94 mm²/m
Permissible crack width wk=0.3 mm

Bond coefficient k1 k1=1.14

Crack inducing strain

Short-term crack inducing strain ecrs=0.5*ae*kc*k*fcteff*(1+1/(ae*p))
/Es=0.33603E-3 με
Long-term crack inducing strain ecrl=0.5*ae*kc*k*fcteff*(1+1/(ae*p))
/Es=0.56328E-3 με

Check crack width

Diameter of distribution steel dia=16 mm
Spacing of distribution steel spacd=INT(250*PI*dia^2/As1)=96 mm
Area of distribution steel Asdis=As1=2094 mm²/m
Cover to reinforcement c=30 mm
Design crack width (short-term) wks=srmax*ecrs=0.15245 mm
Design crack width (long-term) wkl=srmax*ecrl=0.25555 mm
The short-term crack width 0.15245 mm is less than the permissible value of 0.3 mm hence satisfactory.
The long-term crack width 0.25555 mm is less than the permissible value of 0.3 mm hence satisfactory.

Arrangement of reinforcement

(External end restraint (Fig L.1(b), EN 1992-3))

```
        ======== Reinforcement for end restraint

 ---------------------------------------------------------------
        \|        {                      {          |/
        \| =========}==================}========   |/
<----   \|         {                  {             |/ ---->
        \|     ======{=====================        |/
        \|                              {          |/
        \|                              {          |/
<----   \|         {                    {          |/ ---->
        \|        { <---cracks                     |/
        \|                                         |/
        \|   ======{================={=======      |/
        \|       }                    }             |/
<----   \| ======{======================={========  |/ ---->
        \|     }                          }        |/
 ---------------------------------------------------------------
```

SUMMARY **Section is subject to (external) end restraint. Reinforcement As=2094 mm²/m should be provided throughout the member perpendicular to the restraining edge.**

Copyright 1986-2024 Fitzroy Systems Ltd.

Location: Ex5 - Consider a 2500mm thick slab (internal restraint)

Early Thermal Cracking in Concrete - EN 1992-1-1 and EN 1992-3

Calculations for distribution reinforcement for the control of early thermal cracking of reinforced & prestressed post-tensioned concrete members. Both BS EN 1992-2:2005 and BS EN 1992-1-1:2004 do not provide guidance on early thermal cracking, but BS EN 1992-3:2006 for liquid retaining and containing structures does.

Overall depth of concrete section h=2500 mm
Char.tensile strength (reinf'ment) fyk=500 N/mm²

The minimum reinforcement area to control crack spacing will be evaluated in accordance with BS EN 1992-1-1:2004 Clause 7.3.2(2).
The tensile zone is that part of the section which is calculated to be in tension just before formation of the first crack. The section behaves elastically until the tensile fibre stress reaches fctm.
The following is in accordance with CIRIA C660 Section 4.11.3.
Area of conc. within tensile zone Act=b*(0.2*h)=500000 mm²/m
The coefficient (k) below allows for the effect of non-uniform self equilibrating stresses, which lead to a reduction of restraint forces.

Coefficient value to be adopted	k=1 (internal restraint dominant)
Minimum reinforcement area	Asmin=kc*k*Act*fcteff/fyk=865 mm²/m
Permissible crack width	wk=0.3 mm
Bond coefficient k1	k1=1.14

Crack inducing strain

When designing reinforcement to control cracking caused by solely by temperature differentials, autogenous strain may be omitted from the calculation as it will occur uniformly through the section and will not contribute to differential strain. Long-term strains are also omitted as the stress condition is transient and does not extend beyond the early thermal cycle.

Tensile strain capacity	ectu=76 με
Coefficient of thermal expansion	aTc=12 με/°C
Temperature differential (ΔT)	delT=46 °C
Short-term crack inducing strain	ecrs=K1*delT*aTc*R-0.5*ectu=112.7 με

Check crack width

Min steel area each face	Asmin=865 mm²/m
Diameter of distribution steel	dia=16 mm
Spacing of distribution steel	spacd=225 mm
Area of distribution steel	Asdis=INT(250*PI*dia^2/spacd) =893 mm²/m
Cover to reinforcement	c=50 mm
Design crack width (short-term)	wks=srmax*ecrs/10^6=0.16101 mm

The short-term crack width 0.16101 mm is less than the permissible value of 0.3 mm hence satisfactory.
Arrangement of reinforcement - Internal restraint
Where the least dimension of the member exceeds 1m, and the sum of the two smallest dimensions exceeds 4m, the section is considered to be subject to internal restraint due to the temperature gradient between the core and the surface. The area of reinforcement,

As=893 mm²/m shall be provided in each of two directions in all surfaces of the member.

SUMMARY **Section is subject to (internal) restraint due to temperature differentials within the member. Reinforcement As=893 mm²/m should be provided in each of the two directions in all surfaces of the member.**

Copyright 1986-2024 Fitzroy Systems Ltd.

Location: Ex6 - Consider a 500mm thick slab (edge restraint)

Early Thermal Cracking in Concrete - EN 1992-1-1 and EN 1992-3

Calculations for distribution reinforcement for the control of early thermal cracking of reinforced & prestressed post-tensioned concrete members. Both BS EN 1992-2:2005 and BS EN 1992-1-1:2004 do not provide guidance on early thermal cracking, but BS EN 1992-3:2006 for liquid retaining and containing structures does.

Overall depth of concrete section h=500 mm
Char.tensile strength (reinf'ment) fyk=500 N/mm²

The minimum reinforcement area to control crack spacing will be evaluated in accordance with BS EN 1992-1-1:2004 Clause 7.3.2(2).
The tensile zone is that part of the section which is calculated to be in tension just before formation of the first crack. The section behaves elastically until the tensile fibre stress reaches fctm.
For a rectangular section, the area in tension is half the slab depth.

Area of conc. within tensile zone	Act=b*h/2=250000 mm²/m
Stress distribution coefficient	kc=0.9

The coefficient (k) below allows for the effect of non-uniform self equilibrating stresses, which lead to a reduction of restraint forces.

Coefficient (Clause 7.3.2(2))	k'=TABLE 6.13 for h=500 =0.86
Coefficient value to be adopted	k=1
Minimum reinforcement area	Asmin=kc*k*Act*fcteff/fyk=1303.4 mm²/m
Permissible crack width	wk=0.21 mm
Temp.fall: hydrat.peak & ambient	T1=27 °C
Long-term drop in temperature	T2=20 °C
Bond coefficient k1	k1=1.14

Crack inducing strain

Coefficient of thermal expansion	aTc=12 με/°C
Restraint factor (short-term)	R1=0.62 (thermal)
Restraint factor (long-term)	R2=0.62 (thermal)
Restraint factor (long-term)	R3=0.62 (drying)
Shrinkage strain (short-term)	ecas=15 με
Shrinkage strain (long-term)	ecal=50 με
Tensile strain capacity	ectus=76 με (short-term)
Tensile strain capacity	ectul=108 με (long-term)

The coefficient below deals with the effect of stress relaxation due to creep under sustained loading.

Creep coefficient	K1=0.65
Short-term crack inducing strain	ecrs=K1*(aTc*T1+ecas)*R1-0.5*ectus =98.617 με
Long-term crack inducing strain	ecrl=K1*(c1+c2+c3)-0.5*ectul=251.07 με

Check crack width

Min steel area each face	Asmin=1303.4 mm²/m
Diameter of distribution steel	dia=20 mm
Spacing of distribution steel	spacd=175 mm

Area of distribution steel Asdis=INT(250*PI*dia^2/spacd)
=1795 mm²/m
Cover to reinforcement c=40 mm
Design crack width (short-term) wks=srmax*ecrs/10^6=0.079958 mm
Design crack width (long-term) wkl=srmax*ecrl/10^6=0.20357 mm
The short-term crack width 0.079958 mm is less than the permissible value of 0.21 mm hence satisfactory.
The long-term crack width 0.20357 mm is less than the permissible value of 0.21 mm hence satisfactory.

Arrangement of reinforcement

(External edge restraint (Fig L.1(a), EN 1992-3))

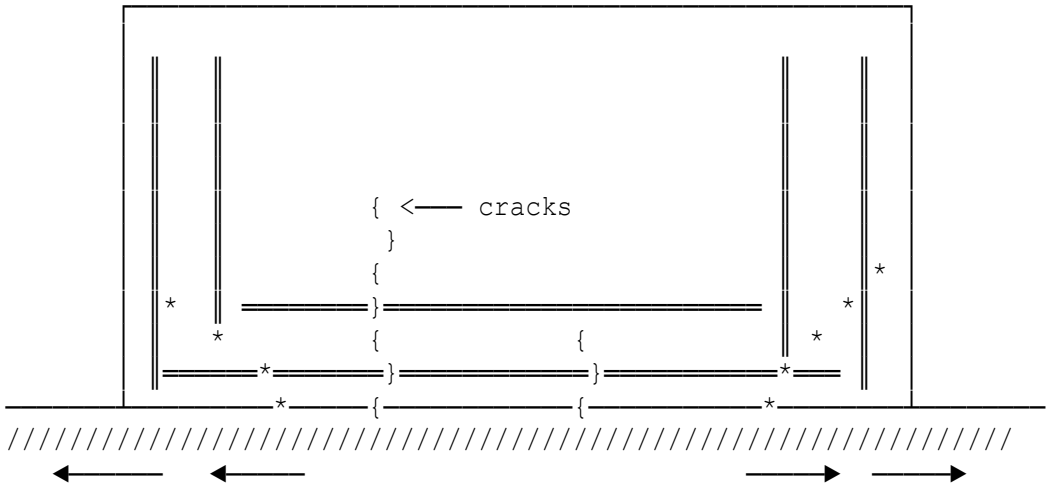

═══	reinforcement for edge restraint
‖	reinforcement for warping restraint
{	cracking due to edge restraint
*	cracking due to warping restraint

Reinforcement shall be provided parallel to the restraint. Where the length to height ratio exceeds 2:1 this reinforcement shall be provided over the full height of the section. When the length to height ratio is 2:1 or less, and there is no end restraint, reinforcement need only be placed in the half of the section adjacent to the restraint. The area of reinforcement, As=1795 mm²/m shall be provided in the faces of the section.
In addition to the reinforcement parallel to the edge restraint, reinforcement of the same unit area shall also be provided to control the effects of warping restraint at the ends. This reinforcement shall be perpendicular to the edge restraint and be provided over a length at the end equivalent to the lesser of the height of the section, or 0.2 times the overall length.

SUMMARY **Section is subject to (external) edge restraint. Reinforcement As=1795 mm²/m should be provided parallel to the edge restraint. Furthermore provide warping reinforcement.**

Location: Ex1 -Example from Appendix B BA 39/93

Assessment of Half-Joints at Serviceability Limit State

to DoT Advice Note BA 39/93

Breadth of half-joint b=1100 mm
Depth of half-joint h=710 mm
Length of half-joint k=540 mm
Splay dimensions s=100 mm

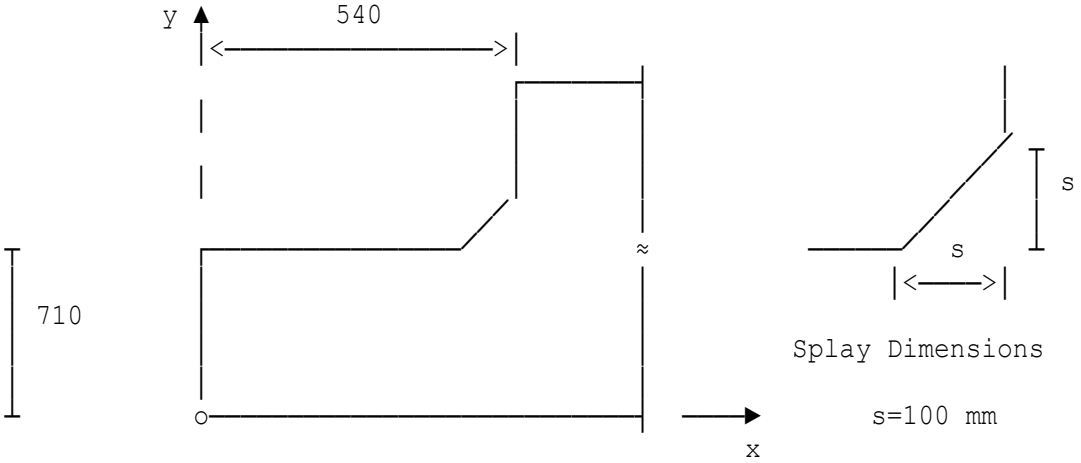

Breadth of half-joint 1100 mm

Young's modulus of reinforcement Es=200000 N/mm²
Number of reinforcement groups nog=4
Reinforcement group 1 :
Anti-clockwise angle from x axis ang(1)=60°
x coordinate x(1)=522.94 mm
y coordinate y(1)=727.06 mm
Area of reinforcement As(1)=2510 mm²
Diameter of bars in group d(1)=20 mm
Spacing of bars in group s(1)=140 mm
Effective area of reinforcement
group normal to crack line Ae(1)=As(i)*(COS(PI/4
-RAD(ang(i))))^2=2341.9 mm²
Reinforcement group 2 :
Anti-clockwise angle from x axis ang(2)=60°
x coordinate x(2)=571 mm
y coordinate y(2)=679 mm
Area of reinforcement As(2)=2510 mm²
Diameter of bars in group d(2)=20 mm
Spacing of bars in group s(2)=140 mm
Effective area of reinforcement
group normal to crack line Ae(2)=As(i)*(COS(PI/4
-RAD(ang(i))))^2=2341.9 mm²
Reinforcement group 3 :
Anti-clockwise angle from x axis ang(3)=0°
y coordinate y(3)=649 mm
Area of reinforcement As(3)=452 mm²

```
Diameter of bars in group         d(3)=12 mm
Spacing of bars in group          s(3)=275 mm
Effective area of reinforcement
group normal to crack line        Ae(3)=As(i)*(COS(PI/4
                                        -RAD(ang(i))))^2=226 mm²
Reinforcement group 4 :
Anti-clockwise angle from x axis  ang(4)=90°
x coordinate                      x(4)=640 mm
Area of reinforcement             As(4)=452 mm²
Diameter of bars in group         d(4)=12 mm
Spacing of bars in group          s(4)=275 mm
Effective area of reinforcement
group normal to crack line        Ae(4)=As(i)*(COS(PI/4
                                        -RAD(ang(i))))^2=226 mm²
Concrete cube strength            fcu=30 N/mm²
Young's modulus                   Ec=28000 N/mm²

Vertical applied loading:
Load                              FAV(1)=-1057 kN
x coordinate                      xR(1)=235 mm
Horizontal applied loading
Number of applied horiz. loads    noh=0
Partial safety factor for material strength at Serviceability
Limit State  gamma m              gm=1
```

SUMMARY

Concrete compressive strain	**0.23398E-3**
Crack width (from Expression 2)	**0.4739 mm**

Location: Ex2 - Beam A

Assessment of Half-Joints at Serviceability Limit State

to DoT Advice Note BA 39/93

Breadth of half-joint	b=1100 mm
Depth of half-joint	h=710 mm
Length of half-joint	k=540 mm
Splay dimensions	s=100 mm

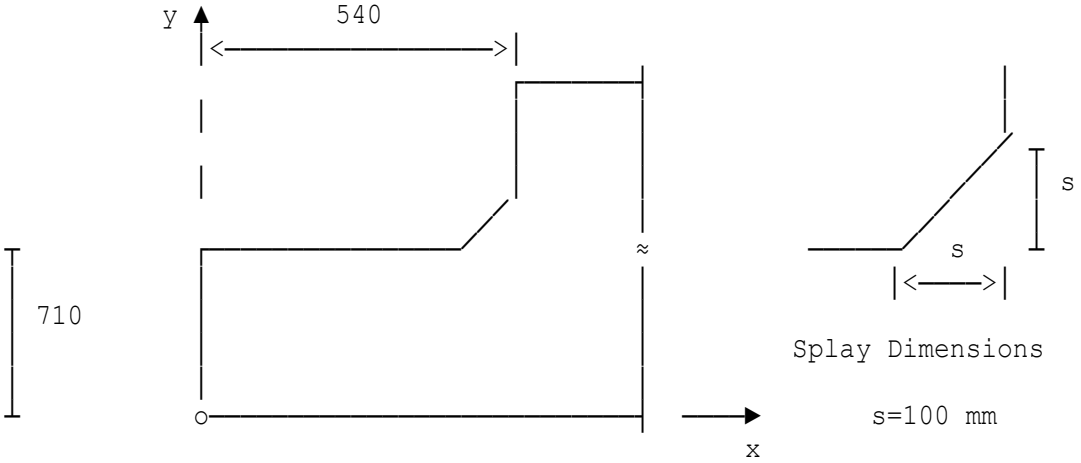

Breadth of half-joint 1100 mm

Young's modulus of reinforcement	Es=200000 N/mm²
Number of reinforcement groups	nog=1
Reinforcement group 1 :	
Anti-clockwise angle from x axis	ang(1)=0°
y coordinate	y(1)=649 mm
Area of reinforcement	As(1)=452 mm²
Diameter of bars in group	d(1)=12 mm
Spacing of bars in group	s(1)=275 mm
Effective area of reinforcement group normal to crack line	Ae(1)=As(i)*(COS(PI/4 -RAD(ang(i))))^2=226 mm²

WARNING:
Vertical or inclined reinforcement has not been specified.

Location: Ex3 - Beam B

Assessment of Half-Joints at Serviceability Limit State

to DoT Advice Note BA 39/93

Breadth of half-joint b=1100 mm
Depth of half-joint h=710 mm
Length of half-joint k=540 mm
Splay dimensions s=100 mm

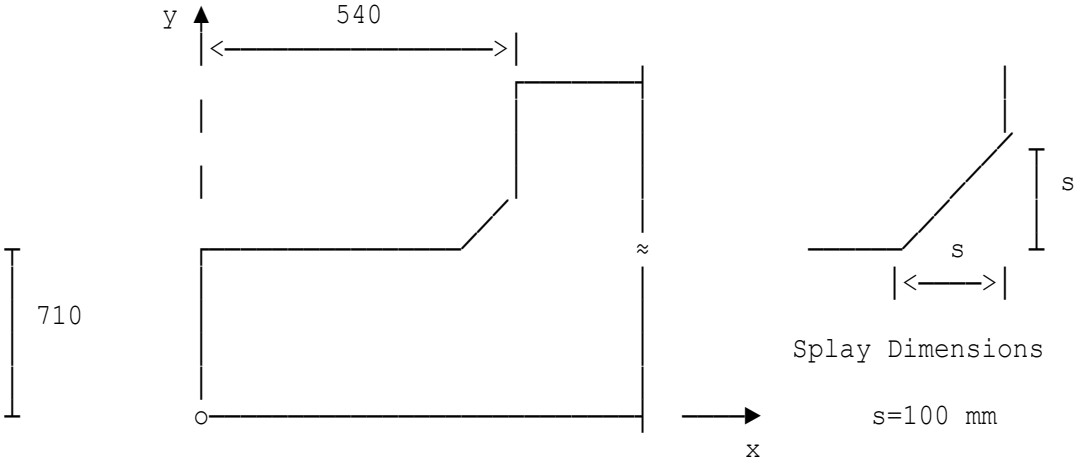

Breadth of half-joint 1100 mm

Young's modulus of reinforcement Es=200000 N/mm²
Number of reinforcement groups nog=4
Reinforcement group 1 :
Anti-clockwise angle from x axis ang(1)=60°
x coordinate x(1)=522.94 mm
y coordinate y(1)=727.06 mm
Area of reinforcement As(1)=2510 mm²
Diameter of bars in group d(1)=20 mm
Spacing of bars in group s(1)=140 mm
Effective area of reinforcement
group normal to crack line Ae(1)=As(i)*(COS(PI/4
-RAD(ang(i))))^2=2341.9 mm²
Reinforcement group 2 :
Anti-clockwise angle from x axis ang(2)=60°
x coordinate x(2)=571 mm
y coordinate y(2)=679 mm
Area of reinforcement As(2)=2510 mm²
Diameter of bars in group d(2)=20 mm
Spacing of bars in group s(2)=140 mm
Effective area of reinforcement
group normal to crack line Ae(2)=As(i)*(COS(PI/4
-RAD(ang(i))))^2=2341.9 mm²
Reinforcement group 3 :
Anti-clockwise angle from x axis ang(3)=0°
y coordinate y(3)=649 mm
Area of reinforcement As(3)=452 mm²

```
Diameter of bars in group         d(3)=12 mm
Spacing of bars in group          s(3)=275 mm
Effective area of reinforcement
group normal to crack line        Ae(3)=As(i)*(COS(PI/4
                                        -RAD(ang(i))))^2=226 mm²
Reinforcement group 4 :
Anti-clockwise angle from x axis  ang(4)=90°
x coordinate                      x(4)=640 mm
Area of reinforcement             As(4)=452 mm²
Diameter of bars in group         d(4)=12 mm
Spacing of bars in group          s(4)=275 mm
Effective area of reinforcement
group normal to crack line        Ae(4)=As(i)*(COS(PI/4
                                        -RAD(ang(i))))^2=226 mm²
Concrete cube strength            fcu=30 N/mm²
Young's modulus                   Ec=28000 N/mm²

Vertical applied loading:
Load                              FAV(1)=-100 kN
x coordinate                      xR(1)=200 mm
Horizontal applied loading
Number of applied horiz. loads    noh=1
Horizontal applied loading 1 :
Load                              FAH(1)=1000 kN
y coordinate                      yH(1)=350 mm
```

WARNING:
Section is in compression. Crack width is zero.

Location: Ex4 - Beam C

Assessment of Half-Joints at Serviceability Limit State

to DoT Advice Note BA 39/93

Breadth of half-joint	b=1100 mm
Depth of half-joint	h=710 mm
Length of half-joint	k=540 mm
Splay dimensions	s=100 mm

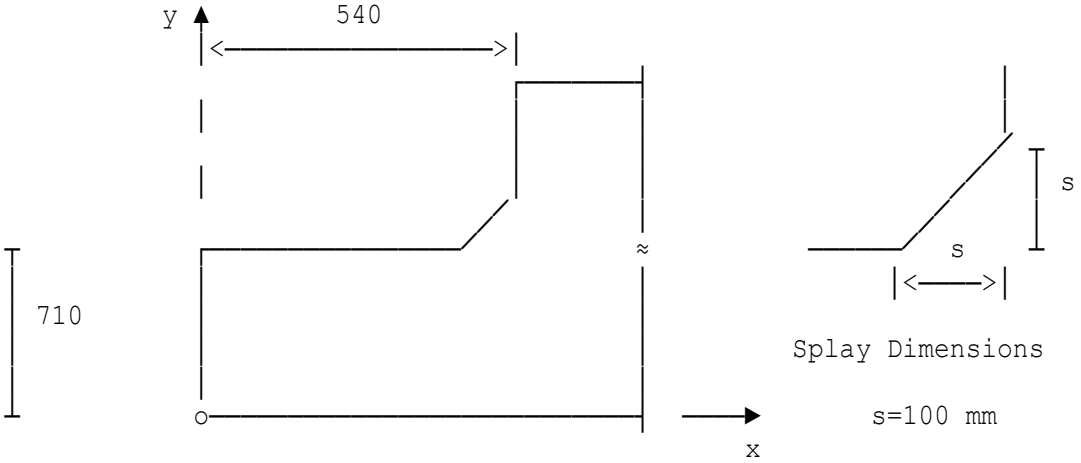

Breadth of half-joint 1100 mm

Young's modulus of reinforcement	Es=200000 N/mm²
Number of reinforcement groups	nog=4
Reinforcement group 1 :	
Anti-clockwise angle from x axis	ang(1)=60°
x coordinate	x(1)=522.94 mm
y coordinate	y(1)=727.06 mm
Area of reinforcement	As(1)=2510 mm²
Diameter of bars in group	d(1)=20 mm
Spacing of bars in group	s(1)=140 mm
Effective area of reinforcement group normal to crack line	Ae(1)=As(i)*(COS(PI/4 -RAD(ang(i))))^2=2341.9 mm²
Reinforcement group 2 :	
Anti-clockwise angle from x axis	ang(2)=60°
x coordinate	x(2)=571 mm
y coordinate	y(2)=679 mm
Area of reinforcement	As(2)=2510 mm²
Diameter of bars in group	d(2)=20 mm
Spacing of bars in group	s(2)=140 mm
Effective area of reinforcement group normal to crack line	Ae(2)=As(i)*(COS(PI/4 -RAD(ang(i))))^2=2341.9 mm²
Reinforcement group 3 :	
Anti-clockwise angle from x axis	ang(3)=0°
y coordinate	y(3)=649 mm
Area of reinforcement	As(3)=452 mm²

```
Diameter of bars in group         d(3)=12 mm
Spacing of bars in group          s(3)=275 mm
Effective area of reinforcement
group normal to crack line        Ae(3)=As(i)*(COS(PI/4
                                        -RAD(ang(i))))^2=226 mm²
Reinforcement group 4 :
Anti-clockwise angle from x axis  ang(4)=90°
x coordinate                      x(4)=640 mm
Area of reinforcement             As(4)=452 mm²
Diameter of bars in group         d(4)=12 mm
Spacing of bars in group          s(4)=275 mm
Effective area of reinforcement
group normal to crack line        Ae(4)=As(i)*(COS(PI/4
                                        -RAD(ang(i))))^2=226 mm²
Concrete cube strength            fcu=30 N/mm²
Young's modulus                   Ec=28000 N/mm²

Vertical applied loading:
Load                              FAV(1)=-100 kN
x coordinate                      xR(1)=200 mm
Horizontal applied loading
Number of applied horiz. loads    noh=1
Horizontal applied loading 1 :
Load                              FAH(1)=-1000 kN
y coordinate                      yH(1)=350 mm
```

WARNING:
Section is in tension. Theory does not cover this case.

Location: Ex5 - Beam D

Assessment of Half-Joints at Serviceability Limit State

to DoT Advice Note BA 39/93

Breadth of half-joint b=1100 mm
Depth of half-joint h=710 mm
Length of half-joint k=540 mm
Splay dimensions s=100 mm

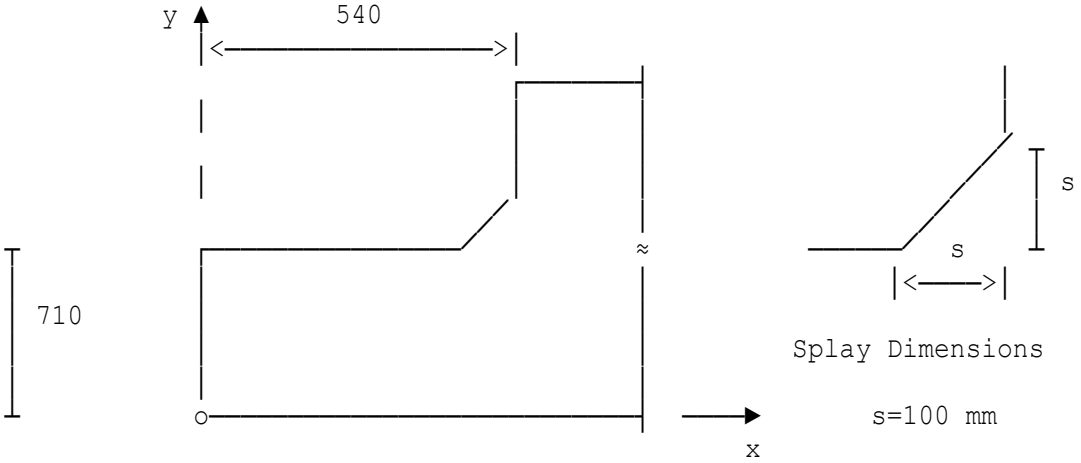

Breadth of half-joint 1100 mm

Young's modulus of reinforcement Es=200000 N/mm²
Number of reinforcement groups nog=4
Reinforcement group 1 :
Anti-clockwise angle from x axis ang(1)=60°
x coordinate x(1)=522.94 mm
y coordinate y(1)=727.06 mm
Area of reinforcement As(1)=2510 mm²
Diameter of bars in group d(1)=20 mm
Spacing of bars in group s(1)=140 mm
Effective area of reinforcement
group normal to crack line Ae(1)=As(i)*(COS(PI/4
-RAD(ang(i))))^2=2341.9 mm²

Reinforcement group 2 :
Anti-clockwise angle from x axis ang(2)=60°
x coordinate x(2)=571 mm
y coordinate y(2)=679 mm
Area of reinforcement As(2)=2510 mm²
Diameter of bars in group d(2)=20 mm
Spacing of bars in group s(2)=140 mm
Effective area of reinforcement
group normal to crack line Ae(2)=As(i)*(COS(PI/4
-RAD(ang(i))))^2=2341.9 mm²

Reinforcement group 3 :
Anti-clockwise angle from x axis ang(3)=0°
y coordinate y(3)=649 mm
Area of reinforcement As(3)=452 mm²

```
Diameter of bars in group         d(3)=12 mm
Spacing of bars in group          s(3)=275 mm
Effective area of reinforcement
group normal to crack line        Ae(3)=As(i)*(COS(PI/4
                                        -RAD(ang(i))))^2=226 mm²
Reinforcement group 4 :
Anti-clockwise angle from x axis  ang(4)=90°
x coordinate                      x(4)=640 mm
Area of reinforcement             As(4)=452 mm²
Diameter of bars in group         d(4)=12 mm
Spacing of bars in group          s(4)=275 mm
Effective area of reinforcement
group normal to crack line        Ae(4)=As(i)*(COS(PI/4
                                        -RAD(ang(i))))^2=226 mm²
Concrete cube strength            fcu=30 N/mm²
Young's modulus                   Ec=28000 N/mm²

Vertical applied loading:
Load                              FAV(1)=1057 kN
x coordinate                      xR(1)=235 mm
Horizontal applied loading
Number of applied horiz. loads    noh=1
Horizontal applied loading 1 :
Load                              FAH(1)=500 kN
y coordinate                      yH(1)=760 mm
```

WARNING:
Re-entrant corner in compression. Theory does not cover this case.

Location: Ex6 - Beam E

Assessment of Half-Joints at Serviceability Limit State

to DoT Advice Note BA 39/93

Breadth of half-joint b=1100 mm
Depth of half-joint h=710 mm
Length of half-joint k=540 mm
Splay dimensions s=100 mm

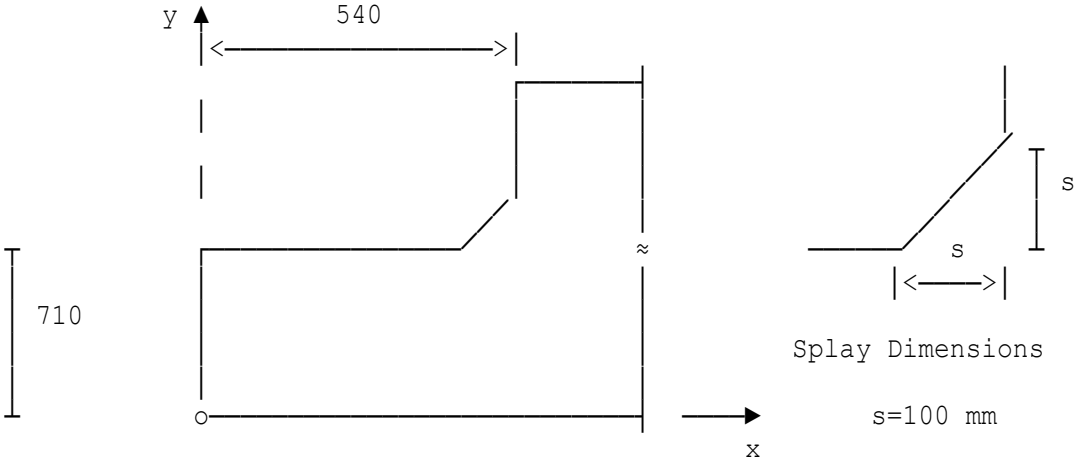

Breadth of half-joint 1100 mm

Young's modulus of reinforcement Es=200000 N/mm²
Number of reinforcement groups nog=4
Reinforcement group 1 :
Anti-clockwise angle from x axis ang(1)=60°
x coordinate x(1)=522.94 mm
y coordinate y(1)=727.06 mm
Area of reinforcement As(1)=2510 mm²
Diameter of bars in group d(1)=20 mm
Spacing of bars in group s(1)=140 mm
Effective area of reinforcement
group normal to crack line Ae(1)=As(i)*(COS(PI/4
-RAD(ang(i))))^2=2341.9 mm²
Reinforcement group 2 :
Anti-clockwise angle from x axis ang(2)=60°
x coordinate x(2)=571 mm
y coordinate y(2)=679 mm
Area of reinforcement As(2)=2510 mm²
Diameter of bars in group d(2)=20 mm
Spacing of bars in group s(2)=140 mm
Effective area of reinforcement
group normal to crack line Ae(2)=As(i)*(COS(PI/4
-RAD(ang(i))))^2=2341.9 mm²
Reinforcement group 3 :
Anti-clockwise angle from x axis ang(3)=0°
y coordinate y(3)=649 mm
Area of reinforcement As(3)=452 mm²

```
Diameter of bars in group         d(3)=12 mm
Spacing of bars in group          s(3)=275 mm
Effective area of reinforcement
group normal to crack line        Ae(3)=As(i)*(COS(PI/4
                                        -RAD(ang(i))))^2=226 mm²
Reinforcement group 4 :
Anti-clockwise angle from x axis  ang(4)=90°
x coordinate                      x(4)=640 mm
Area of reinforcement             As(4)=452 mm²
Diameter of bars in group         d(4)=12 mm
Spacing of bars in group          s(4)=275 mm
Effective area of reinforcement
group normal to crack line        Ae(4)=As(i)*(COS(PI/4
                                        -RAD(ang(i))))^2=226 mm²
Concrete cube strength            fcu=30 N/mm²
Young's modulus                   Ec=28000 N/mm²

Vertical applied loading:
Load                              FAV(1)=-1057 kN
x coordinate                      xR(1)=235 mm
Horizontal applied loading
Number of applied horiz. loads    noh=1
Horizontal applied loading 1 :
Load                              FAH(1)=-500 kN
y coordinate                      yH(1)=380 mm
Partial safety factor for material strength at Serviceability
Limit State  gamma m              gm=1
```

SUMMARY

Concrete compressive strain	**0.13455E-3**
Crack width (from Expression 2)	**0.58682 mm**

Location: Ex1 - Beam A

Torsion in RC sections to BS5400-4:1990

The areas of longitudinal and link reinforcement calculated are for torsional strength only. The reinforcement is additional to any requirements for shear and bending but may contribute to the area of reinforcement required for the control of early thermal cracking.

Rectangular section - Clause 5.3.4.4(b)

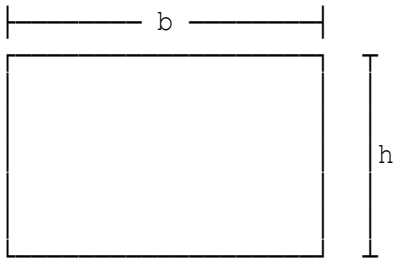

Breadth of concrete section	b=600 mm
Depth of concrete section	h=1200 mm
Char. strength of concrete	fcu=40 N/mm²
Smaller centre line link dim.	x1=520 mm
Larger centre line link dim.	y1=1120 mm
Torsion moment due to ult. loads	T=290 kNm
Applied shear force	V=500 kN
Tensile r'ment effective depth	d=1139 mm

RESULTS FROM RECTANGULAR SECTION ANALYSIS FOR TORSION

Link r'ement adequate	**Ast required 77.764 mm²**
	Ast provided 78.54 mm²
Long r'ment adequate	**Asl required 605.01 mm²**
	Asl provided 804.25 mm²

TORSION REINFORCEMENT ADEQUATE

Location: Ex2 - Box Section A

Torsion in RC sections to BS5400-4:1990

The areas of longitudinal and link reinforcement calculated are for torsional strength only. The reinforcement is additional to any requirements for shear and bending but may contribute to the area of reinforcement required for the control of early thermal cracking.

Box section - Clause 5.3.4.4(a)

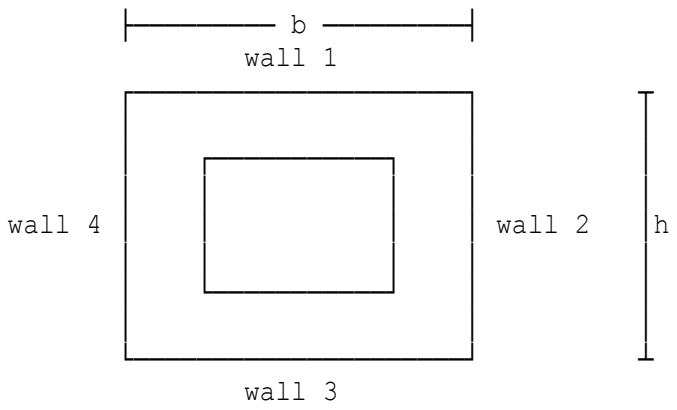

Breadth of concrete section	b=2000 mm
Depth of concrete section	h=1000 mm
Char. strength of concrete	fcu=40 N/mm²
Smaller centre line link dim.	x1=900 mm
Larger centre line link dim.	y1=1900 mm
Torsion moment due to ult. loads	T=500 kNm
Applied shear force to wall 2	V2=50 kN
Applied shear force to wall 4	V4=75 kN
Effective depth wall 2	d2=920 mm
Effective depth wall 4	d4=900 mm

RESULTS FROM BOX SECTION ANALYSIS FOR TORSION

Link r'ment adequate	**Ast required 131.56 mm²**
	Ast provided 201.06 mm²
Long r'ment adequate	**Asl required 119.6 mm²**
	Asl provided 314.16 mm²

TORSION REINFORCEMENT ADEQUATE

Location: Ex3 - Box Section B

Torsion in RC sections to BS5400-4:1990

The areas of longitudinal and link reinforcement calculated are for torsional strength only. The reinforcement is additional to any requirements for shear and bending but may contribute to the area of reinforcement required for the control of early thermal cracking.

Box section - Clause 5.3.4.4(a)

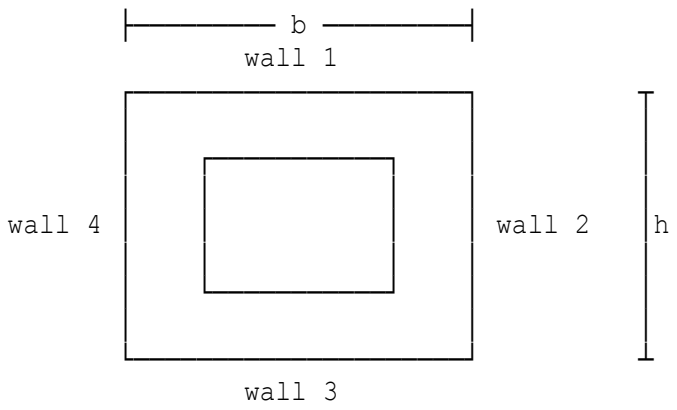

Breadth of concrete section	b=600 mm
Depth of concrete section	h=500 mm
Char. strength of concrete	fcu=40 N/mm²
Smaller centre line link dim.	x1=500 mm
Larger centre line link dim.	y1=400 mm
Torsion moment due to ult. loads	T=60 kNm
Applied shear force to wall 2	V2=10 kN
Applied shear force to wall 4	V4=20 kN
Effective depth wall 2	d2=420 mm
Effective depth wall 4	d4=440 mm

RESULTS FROM BOX SECTION ANALYSIS FOR TORSION

Link reinforcement inadequate : increase area or reduce spacing
Ast required 157.35 mm²
Ast provided 78.54 mm²
Long r'ment adequate Asl required 106.9 mm²
Asl provided 201.06 mm²

TORSION REINFORCEMENT INADEQUATE

Location: Ex4 - I Section

Torsion in RC sections to BS5400-4:1990

The areas of longitudinal and link reinforcement calculated are for torsional strength only. The reinforcement is additional to any requirements for shear and bending but may contribute to the area of reinforcement required for the control of early thermal cracking.

I section - Clause 5.3.4.4(c)

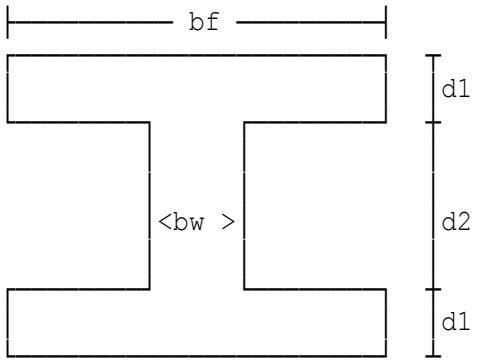

Breadth of flange	bf=750 mm
Breadth of web	bw=200 mm
Depth of flange	d1=250 mm
Depth of web	d2=1200 mm
Torsion moment due to ult. loads	T=50 kNm
Char. strength of concrete	fcu=30 N/mm²
Smaller centre line link dim.	x1a=100 mm
Larger centre line link dim.	y1a=650 mm
Torsional shear stress from Equation 9(a)	vta=2*Ta*1E6/(hmina^2*(hmaxa-hmina /3))=0.85131 N/mm²
Smaller centre line link dim.	x1b=100 mm
Larger centre line link dim.	y1b=1100 mm
Torsional shear stress from Equation 9(a)	vtb=2*Tb*1E6/(hminb^2*(hmaxb-hminb /3))=0.64098 N/mm²
Applied shear force	V=150 kN
Tensile r'ment effective depth	d=1600 mm
Minimum ultimate torsion stress for which reinforcement is required (Table 10)	vtmin=TABLE 1 for fcu=30 =0.37 N/mm²

RESULTS FROM I SECTION ANALYSIS FOR TORSION

Rectangle A:

Link reinforcement adequate	**Ast required 74.571 mm²**
	Ast provided 113.1 mm²
Long. reinforcement adequate	**Asl required 85.224 mm²**
	Asl provided 314.16 mm²

TORSION REINFORCEMENT ADEQUATE

Rectangle B:

Link reinforcement adequate	**Ast required 56.725 mm²**
	Ast provided 113.1 mm²
Long. reinforcement adequate	**Asl required 41.255 mm²**
	Asl provided 314.16 mm²

TORSION REINFORCEMENT ADEQUATE

Location: Ex5 - T Section

Torsion in RC sections to BS5400-4:1990

The areas of longitudinal and link reinforcement calculated are for torsional strength only. The reinforcement is additional to any requirements for shear and bending but may contribute to the area of reinforcement required for the control of early thermal cracking.

T section - Clause 5.3.4.4(c)

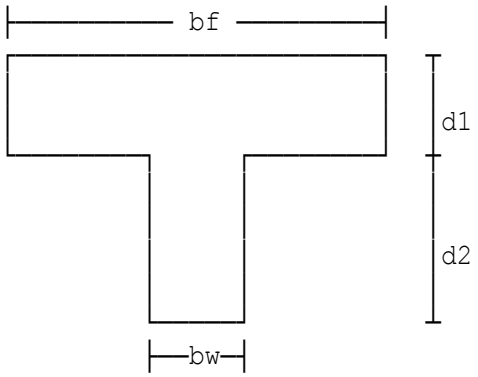

Breadth of flange	bf=1500 mm
Breadth of web	bw=350 mm
Depth of flange	d1=450 mm
Depth of web	d2=2000 mm
Torsion moment due to ult. loads	T=150 kNm
Char. strength of concrete	fcu=30 N/mm²
Smaller centre line link dim.	x1a=350 mm
Larger centre line link dim.	y1a=1400 mm
Torsional shear stress from Equation 9(a)	vta=2*Ta*1E6/(hmina^2*(hmaxa-hmina /3))=0.67435 N/mm²
Smaller centre line link dim.	x1b=250 mm
Larger centre line link dim.	y1b=1900 mm
Torsional shear stress from Equation 9(a)	vtb=2*Tb*1E6/(hminb^2*(hmaxb-hminb /3))=0.50128 N/mm²
Applied shear force	V=100 kN
Tensile r'ment effective depth	d=2250 mm
Minimum ultimate torsion stress for which reinforcement is required (Table 10)	vtmin=TABLE 1 for fcu=30 =0.37 N/mm²

RESULTS FROM T SECTION ANALYSIS FOR TORSION

Rectangle A:

Link reinforcement adequate	**Ast required 80.789 mm²**
	Ast provided 113.1 mm²
Long. reinforcement adequate	**Asl required 58.756 mm²**
	Asl provided 314.16 mm²

TORSION REINFORCEMENT ADEQUATE

Rectangle B:

Link reinforcement adequate	**Ast required 52.283 mm²**
	Ast provided 113.1 mm²
Long. reinforcement adequate	**Asl required 38.024 mm²**
	Asl provided 314.16 mm²

TORSION REINFORCEMENT ADEQUATE

Location: Ex6 - L Section

Torsion in RC sections to BS5400-4:1990

The areas of longitudinal and link reinforcement calculated are for torsional strength only. The reinforcement is additional to any requirements for shear and bending but may contribute to the area of reinforcement required for the control of early thermal cracking.

L section - Clause 5.3.4.4(c)

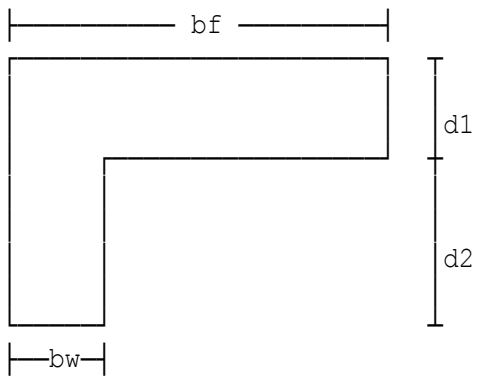

Breadth of flange	bf=1500 mm
Breadth of web	bw=350 mm
Depth of flange	d1=400 mm
Depth of web	d2=1500 mm
Torsion moment due to ult. loads	T=150 kNm
Char. strength of concrete	fcu=30 N/mm²
Smaller centre line link dim.	x1a=300 mm
Larger centre line link dim.	y1a=1400 mm
Torsional shear stress from Equation 9(a)	vta=2*Ta*1E6/(hmina^2*(hmaxa-hmina /3))=0.82157 N/mm²
Smaller centre line link dim.	x1b=250 mm
Larger centre line link dim.	y1b=1400 mm
Torsional shear stress from Equation 9(a)	vtb=2*Tb*1E6/(hminb^2*(hmaxb-hminb /3))=0.71021 N/mm²
Applied shear force	V=100 kN
Tensile r'ment effective depth	d=1750 mm
Minimum ultimate torsion stress for which reinforcement is required (Table 10)	vtmin=TABLE 1 for fcu=30 =0.37 N/mm²

RESULTS FROM L SECTION ANALYSIS FOR TORSION

Rectangle A:

Link reinforcement adequate	**Ast required 91.85 mm²**
	Ast provided 113.1 mm²
Long. reinforcement adequate	**Asl required 66.8 mm²**
	Asl provided 314.16 mm²

TORSION REINFORCEMENT ADEQUATE

Rectangle B:

Link reinforcement adequate	**Ast required 73.839 mm²**
	Ast provided 113.1 mm²
Long. reinforcement adequate	**Asl required 53.701 mm²**
	Asl provided 314.16 mm²

TORSION REINFORCEMENT ADEQUATE

Location: Ex1 - Rectangular section

Torsion in RC sections to EN 1992-1-1:2004

Calculations are in accordance with BS EN 1992-1-1:2004 Clause 6.3 and The Concrete Centre (TCC) publication "Concise Eurocode 2 for Bridges". The areas of longitudinal and link reinforcement calculated are for torsional strength only. The reinforcement is additional to any requirements for shear and bending but may contribute to the area of reinforcement required for the control of early thermal cracking.

The proforma does not include the following adjustment which may be made to the calculated area of torsion reinforcement:

> The area of longitudinal reinforcement in the compressive zone may be reduced in proportion to the available compressive force. No guidance is given on what extent of compression zone should be considered, so it is recommended that a depth equal to twice the cover to the torsion links be considered, as was utilised in BS5400-4.

The angle θ for the compression struts (EC2-1-1, Figure 6.5) should be in the range given in the NA to EN 1992-1-1, Clause 6.2.3(2) such that 1 ≤ cot(θ) ≤ 2.5 (i.e. angle θ values are 22° - 45°).

Rectangular section

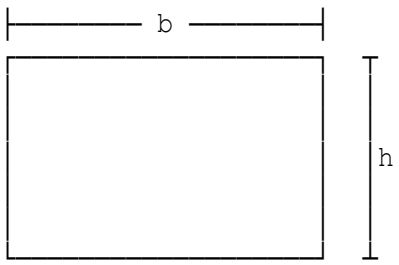

Breadth of concrete section	b=600 mm
Depth of concrete section	h=1200 mm
Smaller centre line link dim.	x1=494 mm
Larger centre line link dim.	y1=1094 mm
Design torsion moment	TEd=290 kNm
Design torsional shear stress	vt=2*TEd*1E6/(hmin^2*(hmax-hmin/3)) =1.6111 N/mm²
Design shear force	VEd=500 kN
Tensile r'ment effective depth	d=1147 mm
Angle of inclination of strut	theta'=22°
Compute cot(θ)	ct=cot(θ)=2.4751
Compute tan(θ)	tt=tan(θ)=0.40403

Crushing limit for combined shear and torsion

The following check is in accordance with EN 1992-2 Clause 6.3.2(104).

Max torsional moment resistance TRdmax=2*v1*fck/1.5*Ak*tef*comp1/1E6
=620.28 kNm

Maximum shear resistance:
VRdmax=0.36*b*d*(1-fck/250)*fck/((ct+tt)*1000)=2401.2 kN
Interaction condition uni=TEd/TRdmax+VEd/VRdmax=0.67576
Therefore concrete section is adequate.

RESULTS FROM RECTANGULAR SECTION ANALYSIS FOR TORSION

Link reinforcement adequate	**Ast required 33.669 mm²**
	Ast provided 113.1 mm²
Long. reinforcement adequate	**Asl required 412.51 mm²**
	Asl provided 490.87 mm²

TORSION REINFORCEMENT ADEQUATE

Location: Ex2 - Box Section

Torsion in RC sections to EN 1992-1-1:2004

Calculations are in accordance with BS EN 1992-1-1:2004 Clause 6.3 and The Concrete Centre (TCC) publication "Concise Eurocode 2 for Bridges". The areas of longitudinal and link reinforcement calculated are for torsional strength only. The reinforcement is additional to any requirements for shear and bending but may contribute to the area of reinforcement required for the control of early thermal cracking.

The proforma does not include the following adjustment which may be made to the calculated area of torsion reinforcement:

> The area of longitudinal reinforcement in the compressive zone may be reduced in proportion to the available compressive force. No guidance is given on what extent of compression zone should be considered, so it is recommended that a depth equal to twice the cover to the torsion links be considered, as was utilised in BS5400-4.

The angle θ for the compression struts (EC2-1-1, Figure 6.5) should be in the range given in the NA to EN 1992-1-1, Clause 6.2.3(2) such that $1 \leq \cot(\theta) \leq 2.5$ (i.e. angle θ values are 22° - 45°).

Box section

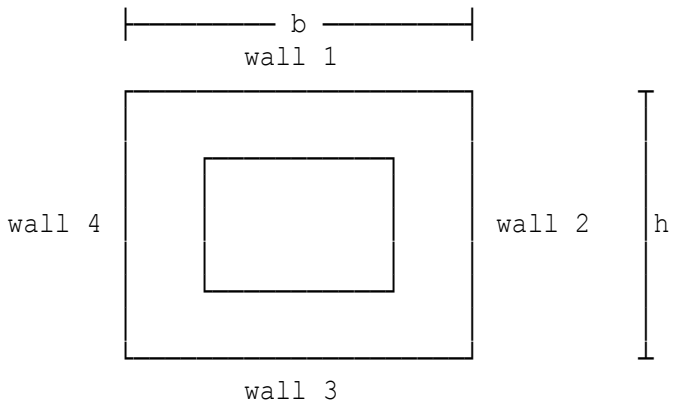

Breadth of concrete section	b=2000 mm
Depth of concrete section	h=1000 mm
Smaller centre line link dim.	x1=900 mm
Larger centre line link dim.	y1=1900 mm
Design torsion moment	TEd=500 kNm
Design shear force to wall 2	VEd2=50 kN
Design shear force to wall 4	VEd4=75 kN
Effective depth wall 2	d2=920 mm
Effective depth wall 4	d4=900 mm
Angle of inclination of strut	theta'=22°
Compute cot(θ)	ct=cot(θ)=2.4751
Compute tan(θ)	tt=tan(θ)=0.40403

Crushing limit for combined shear and torsion

The following check is in accordance with EN 1992-2 Clause 6.3.2(104).
Max torsional moment resistance TRdmax=2*v1*fck/1.5*Ak*tef*comp1/1E6
=2278 kNm
Maximum shear resistance:
VRdmax=0.36*hw4*d4*(1-fck/250)*fck/((ct+tt)*1000)=863.55 kN
Interaction condition uni=TEd/TRdmax+VEd4/VRdmax=0.30634
Therefore concrete section is adequate.

RESULTS FROM BOX SECTION ANALYSIS FOR TORSION

Link reinforcement adequate **Ast required 48.902 mm²**
Ast provided 201.06 mm²
Long.reinforcement adequate **Asl required 217.87 mm²**
Asl provided 314.16 mm²

TORSION REINFORCEMENT ADEQUATE

Inner and outer link option

Provide inner and outer link legs to webs and flanges of the box section to resist torsion as detailed below:

Ast required per face =24.451 mm² (walls & flanges)
Ast provided per face =78.54 mm² (walls & flanges)
Link r'ment diameter =10 mm

Location: Ex3 - Box Section

Torsion in RC sections to EN 1992-1-1:2004

Calculations are in accordance with BS EN 1992-1-1:2004 Clause 6.3 and The Concrete Centre (TCC) publication "Concise Eurocode 2 for Bridges". The areas of longitudinal and link reinforcement calculated are for torsional strength only. The reinforcement is additional to any requirements for shear and bending but may contribute to the area of reinforcement required for the control of early thermal cracking.

The proforma does not include the following adjustment which may be made to the calculated area of torsion reinforcement:

> The area of longitudinal reinforcement in the compressive zone may be reduced in proportion to the available compressive force. No guidance is given on what extent of compression zone should be considered, so it is recommended that a depth equal to twice the cover to the torsion links be considered, as was utilised in BS5400-4.

The angle θ for the compression struts (EC2-1-1, Figure 6.5) should be in the range given in the NA to EN 1992-1-1, Clause 6.2.3(2) such that $1 \leq \cot(\theta) \leq 2.5$ (i.e. angle θ values are 22° - 45°).

Box section

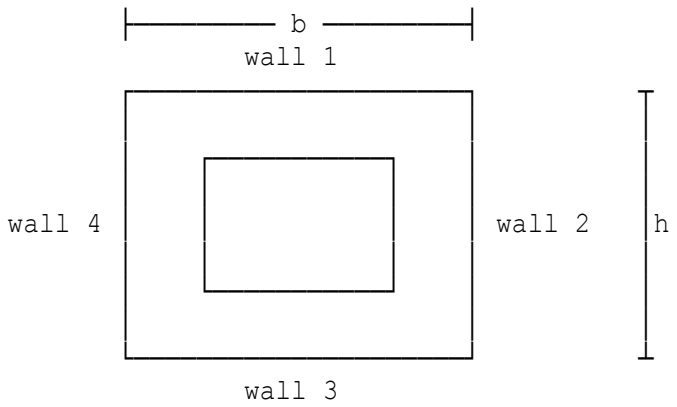

Breadth of concrete section	b=600 mm
Depth of concrete section	h=500 mm
Smaller centre line link dim.	x1=500 mm
Larger centre line link dim.	y1=400 mm
Design torsion moment	TEd=60 kNm
Design shear force to wall 2	VEd2=10 kN
Design shear force to wall 4	VEd4=20 kN
Effective depth wall 2	d2=420 mm
Effective depth wall 4	d4=440 mm
Angle of inclination of strut	theta'=22°
Compute cot(θ)	ct=cot(θ)=2.4751
Compute tan(θ)	tt=tan(θ)=0.40403

Crushing limit for combined shear and torsion

The following check is in accordance with EN 1992-2 Clause 6.3.2(104).
Max torsional moment resistance TRdmax=2*v1*fck/1.5*Ak*tef*comp1/1E6
=135.93 kNm
Maximum shear resistance:
VRdmax=0.36*hw4*d4*(1-fck/250)*fck/((ct+tt)*1000)=214.93 kN
Interaction condition uni=TEd/TRdmax+VEd4/VRdmax=0.53446
Therefore concrete section is adequate.

RESULTS FROM BOX SECTION ANALYSIS FOR TORSION

Link reinforcement adequate	**Ast required 31.788 mm²**
	Ast provided 113.1 mm²
Long.reinforcement adequate	**Asl required 243.42 mm²**
	Asl provided 314.16 mm²

TORSION REINFORCEMENT ADEQUATE

Location: Ex4 - I Section

Torsion in RC sections to EN 1992-1-1:2004

Calculations are in accordance with BS EN 1992-1-1:2004 Clause 6.3 and The Concrete Centre (TCC) publication "Concise Eurocode 2 for Bridges". The areas of longitudinal and link reinforcement calculated are for torsional strength only. The reinforcement is additional to any requirements for shear and bending but may contribute to the area of reinforcement required for the control of early thermal cracking.

The proforma does not include the following adjustment which may be made to the calculated area of torsion reinforcement:

> The area of longitudinal reinforcement in the compressive zone may be reduced in proportion to the available compressive force. No guidance is given on what extent of compression zone should be considered, so it is recommended that a depth equal to twice the cover to the torsion links be considered, as was utilised in BS5400-4.

The angle θ for the compression struts (EC2-1-1, Figure 6.5) should be in the range given in the NA to EN 1992-1-1, Clause 6.2.3(2) such that $1 \leq \cot(\theta) \leq 2.5$ (i.e. angle θ values are 22° - 45°).

I section

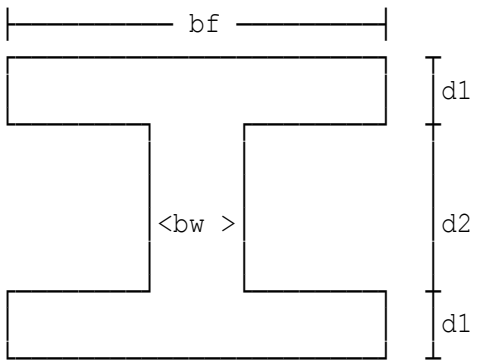

Breadth of flange	bf=750 mm
Breadth of web	bw=200 mm
Depth of flange	d1=250 mm
Depth of web	d2=1200 mm

```
Design torsion moment             TEd=50 kNm
Smaller centre line link dim.     x1a=150 mm
Larger centre line link dim.      y1a=650 mm
Design torsional shear stress     vta=2*Ta*1E6/(hmina^2*(hmaxa-hmina
                                      /3))=0.82083 N/mm²
Smaller centre line link dim.     x1b=100 mm
Larger centre line link dim.      y1b=1100 mm
Design torsional shear stress     vtb=2*Tb*1E6/(hminb^2*(hmaxb-hminb
                                      /3))=0.697 N/mm²
Design shear force                VEd=150 kN
Tensile r'ment effective depth    d=1600 mm
Angle of inclination of strut     theta'=22°
Compute cot(θ)                    ct=cot(θ)=2.4751
Compute tan(θ)                    tt=tan(θ)=0.40403
Min ultimate torsion shear stress vtmin=TABLE 1.1 for fck=25
                                       =0.37 N/mm²
Max torsional moment resistance   TRdma=2*v1*fck/1.5*Ak*tef*comp1/1E6
                                       =60.956 kNm
Max torsional moment resistance   TRdmb=2*v1*fck/1.5*Ak*tef*comp1/1E6
                                       =68.771 kNm
```

Crushing limit for combined shear and torsion

```
The following check is in accordance with EN 1992-2 Clause 6.3.2(104).
Max torsional moment resistance   TRdma=60.956 kNm
Max torsional moment resistance   TRdmb=68.771 kNm
Minimum value governs             TRdmax=60.956 kNm
Maximum shear resistance:
         VRdmax=0.36*bw*d*(1-fck/250)*fck/((ct+tt)*1000)=900.28 kN
Interaction condition             uni=TEd/TRdmax+VEd/VRdmax=0.98688
Therefore concrete section is adequate.
```

RESULTS FROM I SECTION ANALYSIS FOR TORSION

Rectangle A:

Link reinforcement adequate	**Ast required 14.254 mm²**
	Ast provided 113.1 mm²
Long. reinforcement adequate	**Asl required 99.795 mm²**
	Asl provided 314.16 mm²

TORSION REINFORCEMENT ADEQUATE

Rectangle B:

Link reinforcement adequate	**Ast required 18.342 mm²**
	Ast provided 113.1 mm²
Long. reinforcement adequate	**Asl required 81.72 mm²**
	Asl provided 314.16 mm²

TORSION REINFORCEMENT ADEQUATE

Location: Ex5 - T Section

Torsion in RC sections to EN 1992-1-1:2004

Calculations are in accordance with BS EN 1992-1-1:2004 Clause 6.3 and The Concrete Centre (TCC) publication "Concise Eurocode 2 for Bridges". The areas of longitudinal and link reinforcement calculated are for torsional strength only. The reinforcement is additional to any requirements for shear and bending but may contribute to the area of reinforcement required for the control of early thermal cracking.

The proforma does not include the following adjustment which may be made to the calculated area of torsion reinforcement:

> The area of longitudinal reinforcement in the compressive zone may be reduced in proportion to the available compressive force. No guidance is given on what extent of compression zone should be considered, so it is recommended that a depth equal to twice the cover to the torsion links be considered, as was utilised in BS5400-4.

The angle θ for the compression struts (EC2-1-1, Figure 6.5) should be in the range given in the NA to EN 1992-1-1, Clause 6.2.3(2) such that $1 \leq \cot(\theta) \leq 2.5$ (i.e. angle θ values are 22° - 45°).

T section

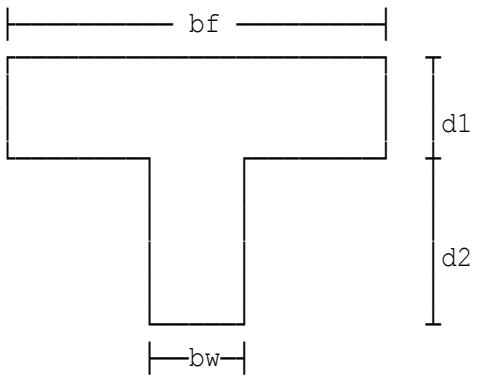

Breadth of flange	bf=1500 mm
Breadth of web	bw=350 mm
Depth of flange	d1=450 mm
Depth of web	d2=2000 mm
Design torsion moment	TEd=150 kNm
Smaller centre line link dim.	x1a=350 mm
Larger centre line link dim.	y1a=1400 mm
Design torsional shear stress	vta=2*Ta*1E6/(hmina^2*(hmaxa-hmina /3))=0.65012 N/mm²
Smaller centre line link dim.	x1b=250 mm
Larger centre line link dim.	y1b=1900 mm
Design torsional shear stress	vtb=2*Tb*1E6/(hminb^2*(hmaxb-hminb /3))=0.52999 N/mm²
Design shear force	VEd=100 kN

```
Tensile r'ment effective depth    d=2250 mm
Angle of inclination of strut     theta'=22°
Compute cot(θ)                    ct=cot(θ)=2.4751
Compute tan(θ)                    tt=tan(θ)=0.40403
Min ultimate torsion shear stress vtmin=TABLE 1.1 for fck=25
                                       =0.37 N/mm²
Max torsional moment resistance   TRdma=2*v1*fck/1.5*Ak*tef*comp1/1E6
                                       =397.61 kNm
Max torsional moment resistance   TRdmb=2*v1*fck/1.5*Ak*tef*comp1/1E6
                                       =346.55 kNm
```

Crushing limit for combined shear and torsion

```
The following check is in accordance with EN 1992-2 Clause 6.3.2(104).
Max torsional moment resistance   TRdma=397.61 kNm
Max torsional moment resistance   TRdmb=346.55 kNm
Minimum value governs             TRdmax=346.55 kNm
Maximum shear resistance:
         VRdmax=0.36*bw*d*(1-fck/250)*fck/((ct+tt)*1000)=2215.5 kN
Interaction condition             uni=TEd/TRdmax+VEd/VRdmax=0.47797
Therefore concrete section is adequate.
```

RESULTS FROM T SECTION ANALYSIS FOR TORSION

Rectangle A:

Link reinforcement adequate	**Ast required 30.885 mm²**
	Ast provided 113.1 mm²
Long. reinforcement adequate	**Asl required 137.6 mm²**
	Asl provided 314.16 mm²

TORSION REINFORCEMENT ADEQUATE

Rectangle B:

Link reinforcement adequate	**Ast required 20.978 mm²**
	Ast provided 113.1 mm²
Long. reinforcement adequate	**Asl required 93.464 mm²**
	Asl provided 314.16 mm²

TORSION REINFORCEMENT ADEQUATE

Location: Ex6 - L Section

Torsion in RC sections to EN 1992-1-1:2004

Calculations are in accordance with BS EN 1992-1-1:2004 Clause 6.3 and The Concrete Centre (TCC) publication "Concise Eurocode 2 for Bridges". The areas of longitudinal and link reinforcement calculated are for torsional strength only. The reinforcement is additional to any requirements for shear and bending but may contribute to the area of reinforcement required for the control of early thermal cracking.

The proforma does not include the following adjustment which may be made to the calculated area of torsion reinforcement:

> The area of longitudinal reinforcement in the compressive zone may be reduced in proportion to the available compressive force. No guidance is given on what extent of compression zone should be considered, so it is recommended that a depth equal to twice the cover to the torsion links be considered, as was utilised in BS5400-4.

The angle θ for the compression struts (EC2-1-1, Figure 6.5) should be in the range given in the NA to EN 1992-1-1, Clause 6.2.3(2) such that $1 \leq \cot(\theta) \leq 2.5$ (i.e. angle θ values are 22° - 45°).

L section

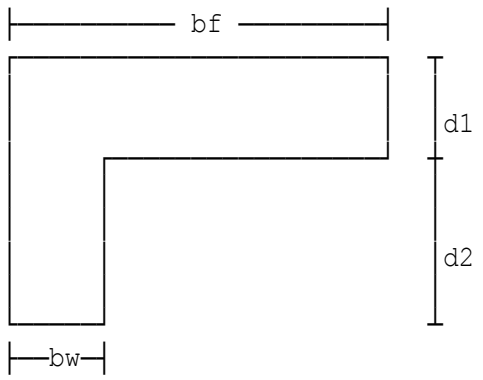

Breadth of flange	bf=1500 mm
Breadth of web	bw=350 mm
Depth of flange	d1=400 mm
Depth of web	d2=1500 mm
Design torsion moment	TEd=150 kNm
Smaller centre line link dim.	x1a=300 mm
Larger centre line link dim.	y1a=1400 mm
Design torsional shear stress	vta=2*Ta*1E6/(hmina^2*(hmaxa-hmina /3))=0.81289 N/mm²
Smaller centre line link dim.	x1b=250 mm
Larger centre line link dim.	y1b=1400 mm
Design torsional shear stress	vtb=2*Tb*1E6/(hminb^2*(hmaxb-hminb /3))=0.72141 N/mm²
Design shear force	VEd=100 kN

```
Tensile r'ment effective depth    d=1750 mm
Angle of inclination of strut     theta'=22°
Compute cot(θ)                    ct=cot(θ)=2.4751
Compute tan(θ)                    tt=tan(θ)=0.40403
Min ultimate torsion shear stress vtmin=TABLE 1.1 for fck=25
                                       =0.37 N/mm²
Max torsional moment resistance   TRdma=2*v1*fck/1.5*Ak*tef*comp1/1E6
                                       =320.75 kNm
Max torsional moment resistance   TRdmb=2*v1*fck/1.5*Ak*tef*comp1/1E6
                                       =250.72 kNm
```

Crushing limit for combined shear and torsion

```
The following check is in accordance with EN 1992-2 Clause 6.3.2(104).
Max torsional moment resistance   TRdma=320.75 kNm
Max torsional moment resistance   TRdmb=250.72 kNm
Minimum value governs             TRdmax=250.72 kNm
Maximum shear resistance:
         VRdmax=0.36*bw*d*(1-fck/250)*fck/((ct+tt)*1000)=1723.2 kN
Interaction condition             uni=TEd/TRdmax+VEd/VRdmax=0.6563
Therefore concrete section is adequate.
```

RESULTS FROM L SECTION ANALYSIS FOR TORSION

Rectangle A:

Link reinforcement adequate	**Ast required 34.931 mm²**
	Ast provided 113.1 mm²
Long. reinforcement adequate	**Asl required 155.63 mm²**
	Asl provided 314.16 mm²

TORSION REINFORCEMENT ADEQUATE

Rectangle B:

Link reinforcement adequate	**Ast required 27.619 mm²**
	Ast provided 113.1 mm²
Long. reinforcement adequate	**Asl required 123.05 mm²**
	Asl provided 314.16 mm²

TORSION REINFORCEMENT ADEQUATE

Location: Ex7 - Bill Mosley Ex 7.9 & Ex 7.7

Torsion in RC sections to EN 1992-1-1:2004

Calculations are in accordance with BS EN 1992-1-1:2004 Clause 6.3 and The Concrete Centre (TCC) publication "Concise Eurocode 2 for Bridges". The areas of longitudinal and link reinforcement calculated are for torsional strength only. The reinforcement is additional to any requirements for shear and bending but may contribute to the area of reinforcement required for the control of early thermal cracking.

The proforma does not include the following adjustment which may be made to the calculated area of torsion reinforcement:

> The area of longitudinal reinforcement in the compressive zone may be reduced in proportion to the available compressive force. No guidance is given on what extent of compression zone should be considered, so it is recommended that a depth equal to twice the cover to the torsion links be considered, as was utilised in BS5400-4.

The angle θ for the compression struts (EC2-1-1, Figure 6.5) should be in the range given in the NA to EN 1992-1-1, Clause 6.2.3(2) such that $1 \leq \cot(\theta) \leq 2.5$ (i.e. angle θ values are 22° - 45°).

Rectangular section

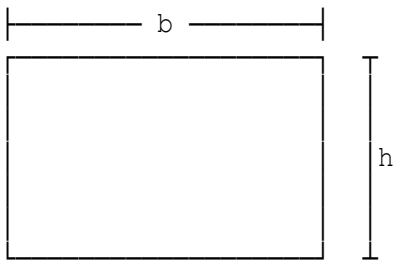

Breadth of concrete section	b=300 mm
Depth of concrete section	h=600 mm
Smaller centre line link dim.	x1=224 mm
Larger centre line link dim.	y1=524 mm
Design torsion moment	TEd=24 kNm
Design torsional shear stress	vt=2*TEd*1E6/(hmin^2*(hmax-hmin/3)) =1.0667 N/mm²
Max ultimate torsion shear stress	vtu=TABLE 2.1 for fck=30 =4.5643 N/mm²
Limiting torsion shear stress	lts=vtu*y1/550=4.3485 N/mm²
Design shear force	VEd=250 kN
Tensile r'ment effective depth	d=540 mm
Angle of inclination of strut	theta'=22°
Compute cot(θ)	ct=cot(θ)=2.4751
Compute tan(θ)	tt=tan(θ)=0.40403

Crushing limit for combined shear and torsion

The following check is in accordance with EN 1992-2 Clause 6.3.2(104).
Max torsional moment resistance TRdmax=2*v1*fck/1.5*Ak*tef*comp1/1E6
=73.356 kNm
Maximum shear resistance:
VRdmax=0.36*b*d*(1-fck/250)*fck/((ct+tt)*1000)=534.76 kN
Interaction condition uni=TEd/TRdmax+VEd/VRdmax=0.79467
Therefore concrete section is adequate.

RESULTS FROM RECTANGULAR SECTION ANALYSIS FOR TORSION

Link reinforcement adequate	**Ast required 13.932 mm²**
	Ast provided 50.265 mm²
Long. reinforcement adequate	**Asl required 170.7 mm²**
	Asl provided 201.06 mm²

TORSION REINFORCEMENT ADEQUATE

Location: Ex8 - Box Section (torsion reinforcement not required)

Torsion in RC sections to EN 1992-1-1:2004

Calculations are in accordance with BS EN 1992-1-1:2004 Clause 6.3 and The Concrete Centre (TCC) publication "Concise Eurocode 2 for Bridges". The areas of longitudinal and link reinforcement calculated are for torsional strength only. The reinforcement is additional to any requirements for shear and bending but may contribute to the area of reinforcement required for the control of early thermal cracking.

The proforma does not include the following adjustment which may be made to the calculated area of torsion reinforcement:

> The area of longitudinal reinforcement in the compressive zone may be reduced in proportion to the available compressive force. No guidance is given on what extent of compression zone should be considered, so it is recommended that a depth equal to twice the cover to the torsion links be considered, as was utilised in BS5400-4.

The angle θ for the compression struts (EC2-1-1, Figure 6.5) should be in the range given in the NA to EN 1992-1-1, Clause 6.2.3(2) such that $1 \leq \cot(\theta) \leq 2.5$ (i.e. angle θ values are 22° - 45°).

Box section

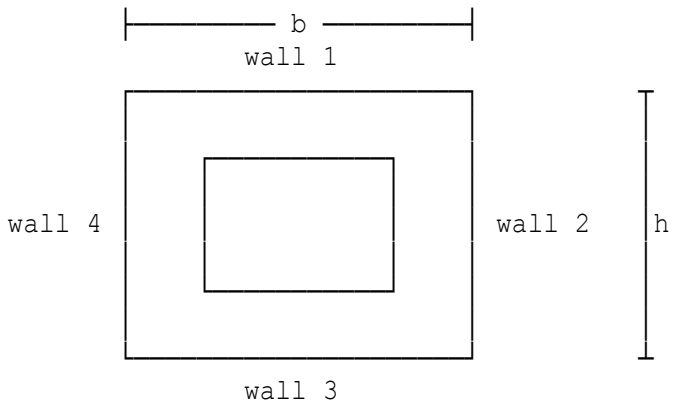

Breadth of concrete section	b=2000 mm
Depth of concrete section	h=2000 mm
Wall 1 thickness	hw1=400 mm
Smaller centre line link dim.	x1=1900 mm
Larger centre line link dim.	y1=1900 mm
Design torsion moment	TEd=500 kNm
Design shear force	VEd=100 kN
Effective depth wall 2	d2=1920 mm
Effective depth wall 4	d4=1920 mm
Angle of inclination of strut	theta'=22°
Compute cot(θ)	ct=cot(θ)=2.4751
Compute tan(θ)	tt=tan(θ)=0.40403

Copyright 1986-2024 Fitzroy Systems Ltd.

RESULTS FROM BOX SECTION ANALYSIS FOR TORSION

TORSION REINFORCEMENT NOT REQUIRED

Location: Ex9 - I Section

Torsion in RC sections to EN 1992-1-1:2004

Calculations are in accordance with BS EN 1992-1-1:2004 Clause 6.3 and The Concrete Centre (TCC) publication "Concise Eurocode 2 for Bridges". The areas of longitudinal and link reinforcement calculated are for torsional strength only. The reinforcement is additional to any requirements for shear and bending but may contribute to the area of reinforcement required for the control of early thermal cracking.

The proforma does not include the following adjustment which may be made to the calculated area of torsion reinforcement:

> The area of longitudinal reinforcement in the compressive zone may be reduced in proportion to the available compressive force. No guidance is given on what extent of compression zone should be considered, so it is recommended that a depth equal to twice the cover to the torsion links be considered, as was utilised in BS5400-4.

The angle θ for the compression struts (EC2-1-1, Figure 6.5) should be in the range given in the NA to EN 1992-1-1, Clause 6.2.3(2) such that $1 \leq \cot(\theta) \leq 2.5$ (i.e. angle θ values are 22° - 45°).

I section

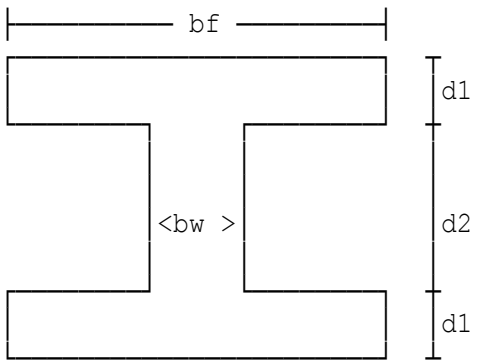

Breadth of flange	bf=1800 mm
Breadth of web	bw=500 mm
Depth of flange	d1=500 mm
Depth of web	d2=1800 mm

Design torsion moment	TEd=140 kNm
Smaller centre line link dim.	x1a=400 mm
Larger centre line link dim.	y1a=1700 mm
Design torsional shear stress	vta=2*Ta*1E6/(hmina^2*(hmaxa-hmina /3))=0.22857 N/mm²
Smaller centre line link dim.	x1b=400 mm
Larger centre line link dim.	y1b=1700 mm
Design torsional shear stress	vtb=2*Tb*1E6/(hminb^2*(hmaxb-hminb /3))=0.22857 N/mm²
Design shear force	VEd=150 kN
Tensile r'ment effective depth	d=2700 mm
Angle of inclination of strut	theta'=22°
Compute cot(θ)	ct=cot(θ)=2.4751
Compute tan(θ)	tt=tan(θ)=0.40403
Min ultimate torsion shear stress	vtmin=TABLE 1.1 for fck=40 =0.42 N/mm²

RESULTS FROM I SECTION ANALYSIS FOR TORSION

Rectangle A:
TORSION REINFORCEMENT NOT REQUIRED

Rectangle B:
TORSION REINFORCEMENT NOT REQUIRED

Copyright 1986-2024 Fitzroy Systems Ltd.

Location: Ex1 - Beam A

Torsional strength calculation to Departmental Standard BD 44/15

Rectangular section (Clause 5.3.4.4(b))

Breadth of concrete section	b=600 mm
Depth of concrete section	h=1200 mm
Strength of concrete	fcu=40 N/mm²
Factor for concrete	gmc=1.5
Applied shear force	V=500 kN
Tensile rein'ment effective depth	d=1139 mm
Strength of links	fyv=460 N/mm²
Strength of long. reinforcement	fyl=460 N/mm²
Factor for reinforcement	gms=1.15
Area of all longitudinal reinf.	sumAl=5150 mm²
Area of one leg of closed link	Ast=201 mm²
Smaller centre-line dim. of link	x1=520 mm
Larger centre-line dim. of link	y1=1120 mm
Average spacing of long. reinf.	sl=200 mm
Spacing of links along member	sv=100 mm

RESULTS FROM TORSION ASSESSMENT

Assessed torsional strength 662.16 kNm

Copyright 1986-2024 Fitzroy Systems Ltd.

Location: Ex2 - Box Section A

Torsional strength calculation to Departmental Standard BD 44/15

Box section (Clause 5.3.4.4(a))

Breadth of concrete section	b=2000 mm
Depth of concrete section	h=1000 mm
Wall 1 thickness	hw1=250 mm
Wall 2 thickness	hw2=300 mm
Wall 3 thickness	hw3=225 mm
Wall 4 thickness	hw4=275 mm
Strength of concrete	fcu=40 N/mm²
Factor for concrete	gmc=1.5
Applied shear force to wall 2	V2=50 kN
Applied shear force to wall 4	V4=75 kN
Effective depth wall 2	d2=920 mm
Effective depth wall 4	d4=900 mm
Strength of links	fyv=460 N/mm²
Strength of long. reinforcement	fyl=460 N/mm²
Factor for reinforcement	gms=1.15
Area of all longitudinal reinf.	sumAl=7034 mm²
Area of one leg of closed link	Ast=113 mm²
Smaller centre-line dim. of link	x1=900 mm
Larger centre-line dim. of link	y1=1900 mm
Average spacing of long. reinf.	sl=250 mm
Spacing of links along member	sv=275 mm

RESULTS FROM TORSION ASSESSMENT

Assessed torsional strength 750.48 kNm

Copyright 1986-2024 Fitzroy Systems Ltd.

Location: Ex3 - Box Section B

Torsional strength calculation to Departmental Standard BD 44/15

Box section (Clause 5.3.4.4(a))

Breadth of concrete section	b=600 mm
Depth of concrete section	h=500 mm
Wall 1 thickness	hw1=100 mm
Wall 2 thickness	hw2=125 mm
Wall 3 thickness	hw3=150 mm
Wall 4 thickness	hw4=140 mm
Strength of concrete	fcu=40 N/mm²
Factor for concrete	gmc=1.5
Applied shear force to wall 2	V2=10 kN
Applied shear force to wall 4	V4=20 kN
Effective depth wall 2	d2=420 mm
Effective depth wall 4	d4=440 mm
Strength of links	fyv=250 N/mm²
Strength of long. reinforcement	fyl=460 N/mm²
Factor for reinforcement	gms=1.15
Area of all longitudinal reinf.	sumAl=1447 mm²
Area of one leg of closed link	Ast=78 mm²
Smaller centre-line dim. of link	x1=400 mm
Larger centre-line dim. of link	y1=500 mm
Average spacing of long. reinf.	sl=250 mm
Spacing of links along member	sv=200 mm

RESULTS FROM TORSION ASSESSMENT

Assessed torsional strength 57.893 kNm

Copyright 1986-2024 Fitzroy Systems Ltd.

Location: Ex4 - I Section

Torsional strength calculation to Departmental Standard BD 44/15

I section (Clause 5.3.4.4(c))

Breadth of flange	bf=750 mm
Breadth of web	bw=200 mm
Depth of flange	d1= 250 mm
Depth of web	d2= 1200 mm
Strength of concrete	fcu=30 N/mm²
Factor for concrete	gmc=1.5

Rectangle A

Strength of links	fyva=460 N/mm²
Strength of long. reinforcement	fyla=460 N/mm²
Factor for reinforcement	gmsa=1.15
Area of all longitudinal reinf.	sumAla=2355 mm²
Area of one leg of closed link	Asta=113 mm²
Smaller centre-line dim. of link	x1a=100 mm
Larger centre-line dim. of link	y1a=650 mm
Average spacing of long. reinf.	sla=200 mm
Spacing of links along member	sva=175 mm

Rectangle B

Applied shear force	Vb=150 kN
Tensile r'ment effective depth	db=1600 mm
Strength of links	fyvb=460 N/mm²
Strength of long. reinforcement	fylb=460 N/mm²
Factor for reinforcement	gmsb=1.15
Area of all longitudinal reinf.	sumAlb=3768 mm²
Area of one leg of closed link	Astb=113 mm²
Smaller centre-line dim. of link	x1b=100 mm
Larger centre-line dim. of link	y1b=1100 mm
Average spacing of long. reinf.	slb=200 mm
Spacing of links along member	svb=275 mm

Rectangle C

Strength of links	fyvc=460 N/mm²
Strength of long. reinforcement	fylc=460 N/mm²
Factor for reinforcement	gmsc=1.15
Area of all longitudinal reinf.	sumAlc=1020 mm²
Area of one leg of closed link	Astc=113 mm²
Smaller centre-line dim. of link	x1c=150 mm
Larger centre-line dim. of link	y1c=175 mm
Average spacing of long. reinf.	slc=200 mm
Spacing of links along member	svc=175 mm

WARNING:
Spacing of links 175 mm is > than (x1c+y1c)/4=81.25 mm
Link spacing does not comply with Cl. 5.3.4.5 requirements.

Rectangle D

Applied shear force	Vd=150 kN
Tensile rein'ment effective depth	dd=1600 mm
Strength of links	fyvd=460 N/mm²
Strength of long. reinforcement	fyld=460 N/mm²
Factor for reinforcement	gmsd=1.15
Area of all longitudinal r'ment	sumAld=5338 mm²
Area of one leg of closed link	Astd=113 mm²
Larger centre-line dim. of link	y1d=1600 mm
Smaller centre-line dim. of link	x1d=100 mm
Larger centre-line dim. of link	y1d=1600 mm
Average spacing of long. r'ment	sld=200 mm
Spacing of links along member	svd=275 mm

RESULTS FROM TORSION ASSESSMENT

Option 1: Assessed torsional strengths

Rectangle A	**41.885 kNm**
Rectangle B	**56.545 kNm**
Assessed torsional strength	**140.32 kNm**

Option 2:
Assessed torsional strengths

Rectangle C	**7.8411 kNm**

WARNING:
Link spacing does not comply with Cl. 5.3.4.5 requirements.

Rectangle D	**82.247 kNm**
Assessed torsional strength	**113.61 kNm**

Copyright 1986-2024 Fitzroy Systems Ltd.

Location: Ex5 - T Section

Torsional strength calculation to Departmental Standard BD 44/15

T section (Clause 5.3.4.4 (c))

Breadth of flange	bf=1500 mm
Breadth of web	bw=350 mm
Depth of flange	d1= 450 mm
Depth of web	d2= 2000 mm
Strength of concrete	fcu=30 N/mm²
Factor for concrete	gmc=1.5

Rectangle A

Strength of links	fyva=460 N/mm²
Strength of long. reinforcement	fyla=460 N/mm²
Factor for reinforcement	gmsa=1.15
Area of all longitudinal reinf.	sumAla=5495 mm²
Area of one leg of closed link	Asta=113 mm²
Smaller centre-line dim. of link	x1a=350 mm
Larger centre-line dim. of link	y1a=1400 mm
Average spacing of long. reinf.	sla=200 mm
Spacing of links along member	sva=275 mm

Rectangle B

Applied shear force	Vb=75 kN
Tensile r'ment effective depth	db=2300 mm
Strength of links	fyvb=460 N/mm²
Strength of long. reinforcement	fylb=460 N/mm²
Factor for reinforcement	gmsb=1.15
Area of all longitudinal reinf.	sumAlb=6751 mm²
Area of one leg of closed link	Astb=113 mm²
Smaller centre-line dim. of link	x1b=250 mm
Larger centre-line dim. of link	y1b=1900 mm
Average spacing of long. reinf.	slb=200 mm
Spacing of links along member	svb=275 mm

Rectangle C

Strength of links	fyvc=460 N/mm²
Strength of long. reinforcement	fylc=460 N/mm²
Factor for reinforcement	gmsc=1.15
Area of all longitudinal reinf.	sumAlc=2669 mm²
Area of one leg of closed link	Astc=113 mm²
Smaller centre-line dim. of link	x1c=350 mm
Larger centre-line dim. of link	y1c=500 mm
Average spacing of long. reinf.	slc=200 mm
Spacing of links along member	svc=275 mm

WARNING:
Spacing of links 275 mm is > than (x1c+y1c)/4=212.5 mm
Link spacing does not comply with Cl. 5.3.4.5 requirements.

Rectangle D

Applied shear force	Vd=75 kN
Tensile rein'ment effective depth	dd=2300 mm
Strength of links	fyvd=460 N/mm²
Strength of long. reinforcement	fyld=460 N/mm²
Factor for reinforcement	gmsd=1.15
Area of all longitudinal r'ment	sumAld=8164 mm²
Area of one leg of closed link	Astd=113 mm²
Larger centre-line dim. of link	y1d=2350 mm
Smaller centre-line dim. of link	x1d=250 mm
Larger centre-line dim. of link	y1d=2350 mm
Average spacing of long. r'ment	sld=200 mm
Spacing of links along member	svd=275 mm

RESULTS FROM TORSION ASSESSMENT

Option 1: Assessed torsional strengths

Rectangle A	**251.88 kNm**
Rectangle B	**244.17 kNm**
Assessed torsional strength	**496.06 kNm**

Option 2:
Assessed torsional strengths

Rectangle C	**89.958 kNm**

WARNING:
Link spacing does not comply with Cl. 5.3.4.5 requirements.

Rectangle D	**302 kNm**
Assessed torsional strength	**481.92 kNm**

Copyright 1986-2024 Fitzroy Systems Ltd.

Location: Ex6 - L Section

Torsional strength calculation to Departmental Standard BD 44/15

L section (Clause 5.3.4.4(c))

Breadth of flange	bf=1500 mm
Breadth of web	bw=350 mm
Depth of flange	d1= 400 mm
Depth of web	d2= 1500 mm
Strength of concrete	fcu=30 N/mm²
Factor for concrete	gmc=1.5

Rectangle A

Strength of links	fyva=460 N/mm²
Strength of long. reinforcement	fyla=460 N/mm²
Factor for reinforcement	gmsa=1.15
Area of all longitudinal reinf.	sumAla=5338 mm²
Area of one leg of closed link	Asta=113 mm²
Smaller centre-line dim. of link	x1a=300 mm
Larger centre-line dim. of link	y1a=1400 mm
Average spacing of long. reinf.	sla=200 mm
Spacing of links along member	sva=275 mm

Rectangle B

Applied shear force	Vb=100 kN
Tensile r'ment effective depth	db=1850 mm
Strength of links	fyvb=460 N/mm²
Strength of long. reinforcement	fylb=460 N/mm²
Factor for reinforcement	gmsb=1.15
Area of all longitudinal reinf.	sumAlb=5181 mm²
Area of one leg of closed link	Astb=113 mm²
Smaller centre-line dim. of link	x1b=250 mm
Larger centre-line dim. of link	y1b=1400 mm
Average spacing of long. reinf.	slb=200 mm
Spacing of links along member	svb=275 mm

Rectangle C

Strength of links	fyvc=460 N/mm²
Strength of long. reinforcement	fylc=460 N/mm²
Factor for reinforcement	gmsc=1.15
Area of all longitudinal reinf.	sumAlc=4082 mm²
Area of one leg of closed link	Astc=113 mm²
Smaller centre-line dim. of link	x1c=300 mm
Larger centre-line dim. of link	y1c=1000 mm
Average spacing of long. reinf.	slc=200 mm
Spacing of links along member	svc=275 mm

Rectangle D

Applied shear force	Vd=100 kN
Tensile rein'ment effective depth	dd=1750 mm

Strength of links	fyvd=460 N/mm²
Strength of long. reinforcement	fyld=460 N/mm²
Factor for reinforcement	gmsd=1.15
Area of all longitudinal r'ment	sumAld=6437 mm²
Area of one leg of closed link	Astd=113 mm²
Larger centre-line dim. of link	y1d=1800 mm
Smaller centre-line dim. of link	x1d=250 mm
Larger centre-line dim. of link	y1d=1800 mm
Average spacing of long. r'ment	sld=200 mm
Spacing of links along member	svd=275 mm

RESULTS FROM TORSION ASSESSMENT

Option 1: Assessed torsional strengths

Rectangle A	**215.9 kNm**
Rectangle B	**179.92 kNm**
Assessed torsional strength	**395.82 kNm**

Option 2:
Assessed torsional strengths

Rectangle C	**154.21 kNm**
Rectangle D	**231.32 kNm**
Assessed torsional strength	**385.54 kNm**

Location: Ex1 - One metre deep slab

Differential temperature effects in concrete bridge decks to BD 37/01

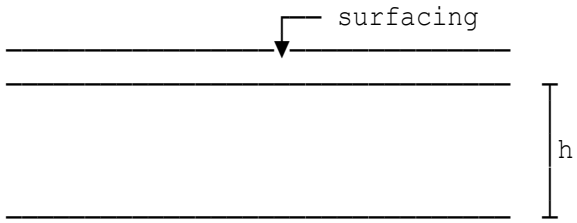

Solid slab

Structural depth	h=1000 mm
Depth of surfacing	ds=100 mm
Value of Young's modulus	EM=28000 N/mm²
Coefficient of expansion	alpha=12E-6 /°C
Number of cross-sections	ncs=1
Breadth at top	xbt(11)=1000 mm
Breadth at bottom	xbb(11)=1000 mm
Depth	xd(11)=1000 mm

Positive Temperature Calculations

Temperature gradient – increments of depth (Figure 9, BD 37/01)
Temperature values (Figure 9 & Table 23 in BD 37/01):

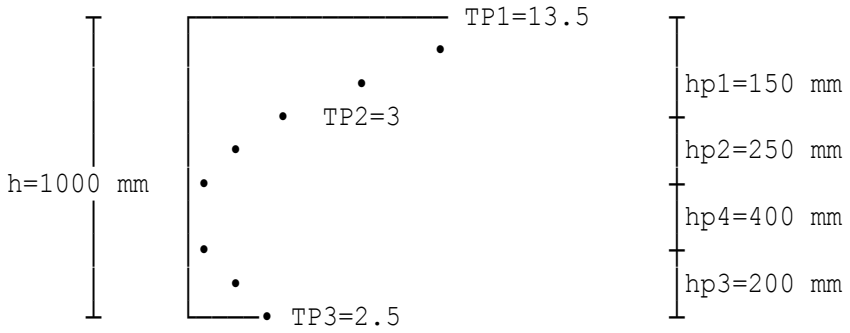

Positive temperature diagram

STRESSES (N/mm²) (tension is positive)

Depth from top	Restrained	Releasing force	Releasing moment	Self equilibrating
0	-4.536	0.6258	1.0832	-2.827
150	-1.008	0.6258	0.75823	0.37603
400	0	0.6258	0.21664	0.84244
800	0	0.6258	-0.64991	-0.024108
1000	-0.84	0.6258	-1.0832	-1.2974

Member length L=10 m
Partial load factor (temperature) gamma=0.8

Plane frame analysis

Axial and bending effects can be analysed in a plane frame model.
Bending effects for hogging releasing moment:
NOTE: The distortion should be input into the plane frame analysis using the MEMBER DISTORTIONS option with the following format.

<members> ROTATION Z -0.61896E-3

NOTE: The equilibrating stresses should be taken into account when the stresses at a section due to combinations of loading are calculated.
Longitudinal effects for tensile releasing force:
NOTE: The value should be input into the plane frame analysis using the MEMBER DISTORTIONS option with the following format.

<members> DISTORTION X 0.1788E-3

NOTE: The equilibrating stresses should be taken into account when the stresses at a section due to combinations of loading are calculated.

Reverse Temperature Calculations

Temperature gradient — increments of depth (Figure 9, BD 37/01)
Temperature values (Figure 9 & Table 23 in BD 37/01):

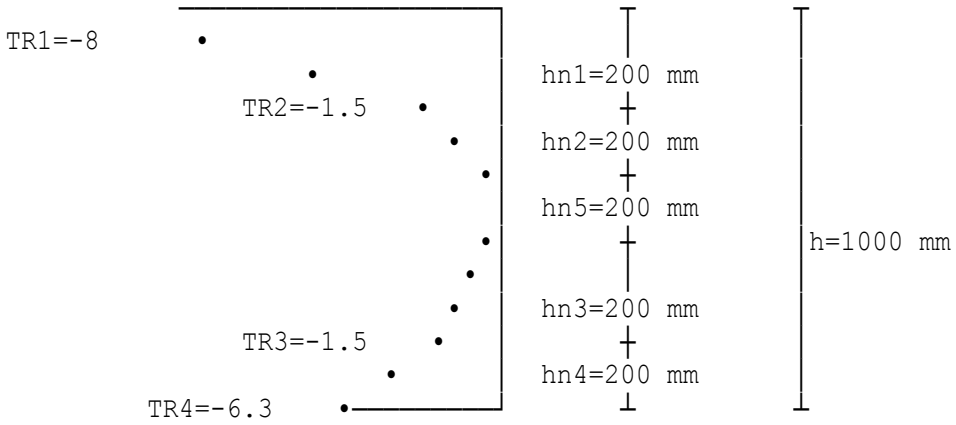

Reverse temperature diagram

STRESSES (N/mm²) (tension is positive)

Depth from top	Restrained	Releasing force	Releasing moment	Self equilibrating
0	2.688	-0.68208	-0.14851	1.8574
200	0.504	-0.68208	-0.089107	-0.26719
400	0	-0.68208	-0.029702	-0.71178
600	0	-0.68208	0.029702	-0.65238
800	0.504	-0.68208	0.089107	-0.088973
1000	2.1168	-0.68208	0.14851	1.5832

Member length L=10 m
Partial load factor (temperature) gamma=0.8

Plane frame analysis

Axial and bending effects can be analysed in a plane frame model.
Bending effects for sagging releasing moment:
NOTE: The distortion should be input into the plane frame analysis using the MEMBER DISTORTIONS option with the following format.

<members> ROTATION Z 84.864E-6

NOTE: The equilibrating stresses should be taken into account when the stresses at a section due to combinations of loading are calculated.
Longitudinal effects for compressive releasing force:
NOTE: The value should be input into the plane frame analysis using the MEMBER DISTORTIONS option with the following format.

<members> DISTORTION X -0.19488E-3

NOTE: The equilibrating stresses should be taken into account when the stresses at a section due to combinations of loading are calculated.

Location: Ex2 - I beam with 150mm surfacing

Differential temperature effects in concrete bridge decks to BD 37/01

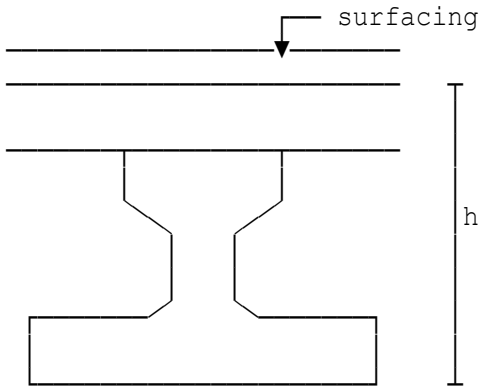

Deck on beams

Structural depth	h=1500 mm
Depth of surfacing	ds=150 mm
Number of cross-sections	ncs=5
Breadth at top	xbt(11)=1000 mm
Breadth at bottom	xbb(11)=1000 mm
Depth	xd(11)=250 mm
Young's modulus	E(11)=20000 N/mm²
Coefficient of expansion	coe(11)=10E-6 /°C
Breadth at top	xbt(21)=300 mm
Breadth at bottom	xbb(21)=200 mm
Depth	xd(21)=100 mm
Young's modulus	E(21)=22000 N/mm²
Coefficient of expansion	coe(21)=12E-6 /°C
Breadth at top	xbt(31)=200 mm
Breadth at bottom	xbb(31)=200 mm
Depth	xd(31)=700 mm
Young's modulus	E(31)=24000 N/mm²
Coefficient of expansion	coe(31)=11E-6 /°C
Breadth at top	xbt(41)=200 mm
Breadth at bottom	xbb(41)=300 mm
Depth	xd(41)=150 mm
Young's modulus	E(41)=28000 N/mm²
Coefficient of expansion	coe(41)=15E-6 /°C
Breadth at top	xbt(51)=1000 mm
Breadth at bottom	xbb(51)=1000 mm
Depth	xd(51)=300 mm
Young's modulus	E(51)=31000 N/mm²
Coefficient of expansion	coe(51)=13E-6 /°C

Positive Temperature Calculations

Temperature gradient – increments of depth (Figure 9, BD 37/01)
Temperature values (Figure 9 & Table 23 in BD 37/01):

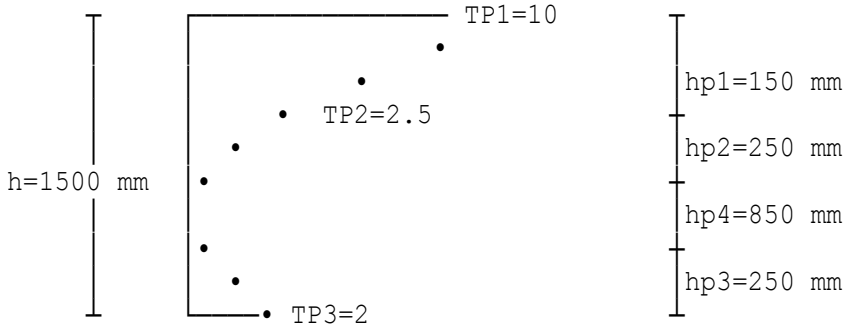

Positive temperature diagram

STRESSES (N/mm²) (tension is positive)

Depth from top	Restrained	Releasing force	Releasing moment	Self equilibrating
0	-2	0.34863	0.41505	-1.2363
150	-0.5	0.34863	0.34402	0.19265
150	-0.5	0.34863	0.34402	0.19265
250	-0.3	0.34863	0.29667	0.3453
250	-0.396	0.38349	0.32633	0.31383
350	-0.132	0.38349	0.27425	0.52574
350	-0.132	0.41836	0.29918	0.58553
400	0	0.41836	0.27077	0.68912
400	0	0.41836	0.27077	0.68912
1050	0	0.41836	-0.098579	0.31978
1050	0	0.48808	-0.11501	0.37307
1200	0	0.48808	-0.21445	0.27363
1200	0	0.54038	-0.23742	0.30295
1250	0	0.54038	-0.27412	0.26625
1250	0	0.54038	-0.27412	0.26625
1500	-0.806	0.54038	-0.45761	-0.72324

Member length L=12 m
Partial load factor (temperature) gamma=1

Plane frame analysis

Axial and bending effects can be analysed in a plane frame model.
Bending effects for hogging releasing moment:
NOTE: The distortion should be input into the plane frame analysis using the MEMBER DISTORTIONS option with the following format.

<members> ROTATION Z -0.28411E-3

NOTE: The equilibrating stresses should be taken into account when the stresses at a section due to combinations of loading are calculated.

Longitudinal effects for tensile releasing force:
NOTE: The value should be input into the plane frame analysis using the MEMBER DISTORTIONS option with the following format.

<members> DISTORTION X 0.20918E-3

NOTE: The equilibrating stresses should be taken into account when the stresses at a section due to combinations of loading are calculated.

Reverse Temperature Calculations

Temperature gradient – increments of depth (Figure 9, BD 37/01)
Temperature values (Figure 9 & Table 23 in BD 37/01):

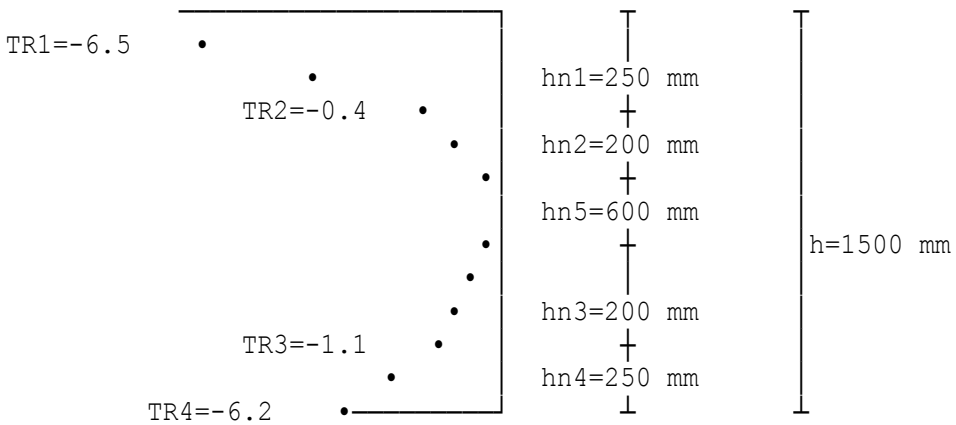

Reverse temperature diagram

STRESSES (N/mm²) (tension is positive)

Depth from top	Restrained	Releasing force	Releasing moment	Self equilibrating
0	1.3	-0.59098	0.20802	0.91704
250	0.08	-0.59098	0.14869	-0.36229
250	0.1056	-0.65008	0.16356	-0.38092
350	0.0528	-0.65008	0.13745	-0.45983
350	0.0528	-0.70918	0.14995	-0.50643
450	0	-0.70918	0.12147	-0.58771
450	0	-0.70918	0.12147	-0.58771
1050	0	-0.70918	-0.049407	-0.75858
1050	0	-0.82737	-0.057642	-0.88501
1200	0.3465	-0.82737	-0.10748	-0.58835
1200	0.33248	-0.91602	-0.119	-0.70254
1250	0.4433	-0.91602	-0.13739	-0.61011
1250	0.4433	-0.91602	-0.13739	-0.61011
1500	2.4986	-0.91602	-0.22935	1.3532

Member length L=12 m
Partial load factor (temperature) gamma=1

Plane frame analysis

Axial and bending effects can be analysed in a plane frame model.

Bending effects for hogging releasing moment:
NOTE: The distortion should be input into the plane frame analysis using the MEMBER DISTORTIONS option with the following format.

```
<members> ROTATION Z -0.1424E-3
```

NOTE: The equilibrating stresses should be taken into account when the stresses at a section due to combinations of loading are calculated.
Longitudinal effects for compressive releasing force:
NOTE: The value should be input into the plane frame analysis using the MEMBER DISTORTIONS option with the following format.

```
<members> DISTORTION X -0.35459E-3
```

NOTE: The equilibrating stresses should be taken into account when the stresses at a section due to combinations of loading are calculated.

Location: Ex3 - I beam with waterproofing

Differential temperature effects in concrete bridge decks to BD 37/01

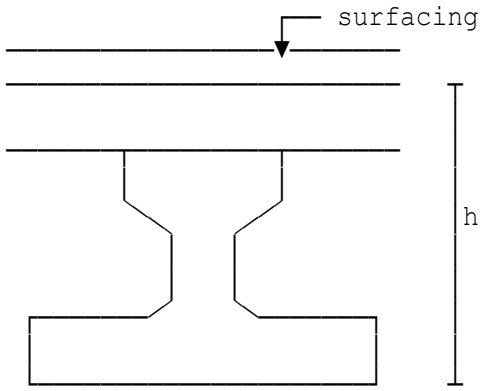

Deck on beams

Structural depth	h=1500 mm
Depth of surfacing	ds=-1 mm
Number of cross-sections	ncs=5
Breadth at top	xbt(11)=1000 mm
Breadth at bottom	xbb(11)=1000 mm
Depth	xd(11)=250 mm
Young's modulus	E(11)=20000 N/mm²
Coefficient of expansion	coe(11)=10E-6 /°C
Breadth at top	xbt(21)=300 mm
Breadth at bottom	xbb(21)=200 mm
Depth	xd(21)=100 mm
Young's modulus	E(21)=22000 N/mm²
Coefficient of expansion	coe(21)=12E-6 /°C
Breadth at top	xbt(31)=200 mm
Breadth at bottom	xbb(31)=200 mm
Depth	xd(31)=700 mm
Young's modulus	E(31)=24000 N/mm²
Coefficient of expansion	coe(31)=11E-6 /°C
Breadth at top	xbt(41)=200 mm
Breadth at bottom	xbb(41)=300 mm
Depth	xd(41)=150 mm
Young's modulus	E(41)=28000 N/mm²
Coefficient of expansion	coe(41)=15E-6 /°C
Breadth at top	xbt(51)=1000 mm
Breadth at bottom	xbb(51)=1000 mm
Depth	xd(51)=300 mm
Young's modulus	E(51)=31000 N/mm²
Coefficient of expansion	coe(51)=13E-6 /°C

Positive Temperature Calculations

Temperature gradient — increments of depth (Figure 9, BD 37/01)
Temperature values (Figure 9 & Table 23 in BD 37/01):

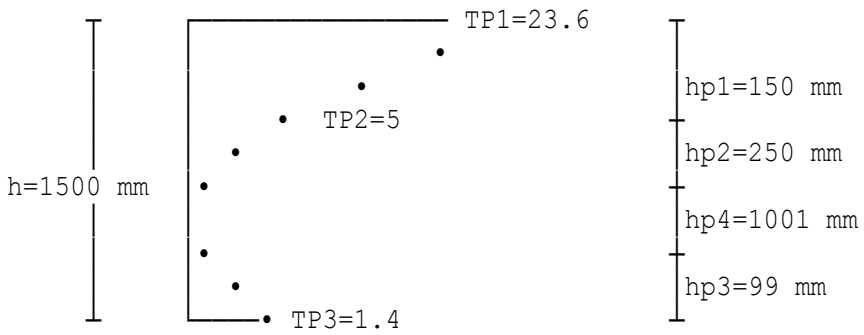

Positive temperature diagram

STRESSES (N/mm²) (tension is positive)

Depth from top	Restrained	Releasing force	Releasing moment	Self equilibrating
0	-4.72	0.57309	1.2666	-2.8803
150	-1	0.57309	1.0498	0.62293
150	-1	0.57309	1.0498	0.62293
250	-0.6	0.57309	0.90534	0.87843
250	-0.792	0.6304	0.99587	0.83427
350	-0.264	0.6304	0.83692	1.2033
350	-0.264	0.68771	0.913	1.3367
400	0	0.68771	0.8263	1.514
400	0	0.68771	0.8263	1.514
1050	0	0.68771	-0.30083	0.38688
1050	0	0.80233	-0.35097	0.45136
1200	0	0.80233	-0.65443	0.1479
1200	0	0.88829	-0.72455	0.16375
1401	0	0.88829	-1.1747	-0.28646
1401	0	0.88829	-1.1747	-0.28646
1500	-0.5642	0.88829	-1.3965	-1.0724

Member length L=12 m
Partial load factor (temperature) gamma=1

Grid analysis

Bending effects for hogging releasing moment:
NOTE: The distortion should be input into the grid analysis using the MEMBER DISTORTIONS option with the following format.

<members> ROTATION Y 0.86702E-3

NOTE: The equilibrating stresses should be taken into account when the stresses at a section due to combinations of loading are calculated.

Reverse Temperature Calculations

Temperature gradient – increments of depth (Figure 9, BD 37/01)
Temperature values (Figure 9 & Table 23 in BD 37/01):

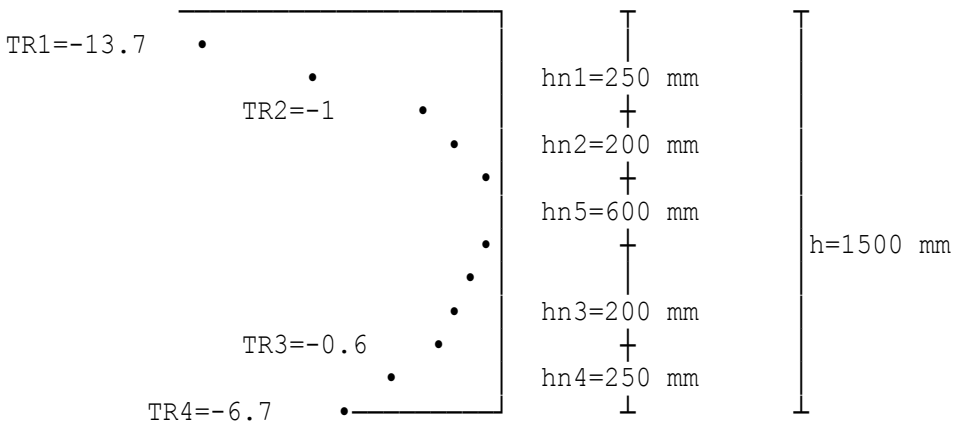

Reverse temperature diagram

STRESSES (N/mm²) (tension is positive)

Depth from top	Restrained	Releasing force	Releasing moment	Self equilibrating
0	2.74	-0.78502	-0.29368	1.6613
250	0.2	-0.78502	-0.20992	-0.79494
250	0.264	-0.86352	-0.23091	-0.83043
350	0.132	-0.86352	-0.19405	-0.92558
350	0.132	-0.94203	-0.2117	-1.0217
450	0	-0.94203	-0.17149	-1.1135
450	0	-0.94203	-0.17149	-1.1135
1050	0	-0.94203	0.069753	-0.87227
1050	0	-1.099	0.081379	-1.0177
1200	0.189	-1.099	0.15174	-0.75829
1200	0.18135	-1.2168	0.168	-0.86744
1250	0.2418	-1.2168	0.19397	-0.78102
1250	0.2418	-1.2168	0.19397	-0.78102
1500	2.7001	-1.2168	0.3238	1.8071

Member length L=12 m
Partial load factor (temperature) gamma=1

Grid analysis

Bending effects for sagging releasing moment:
NOTE: The distortion should be input into the grid analysis using the MEMBER DISTORTIONS option with the following format.

```
<members> ROTATION Y -0.20103E-3
```

NOTE: The equilibrating stresses should be taken into account when the stresses at a section due to combinations of loading are calculated.

Location: Ex1 - One metre deep slab

Differential temperature effects in concrete bridge decks

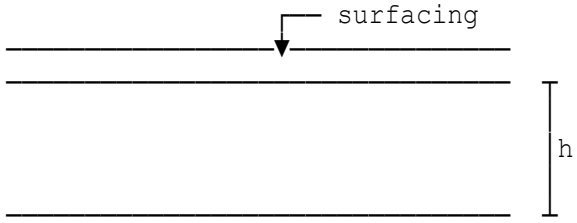

Solid slab

Structural depth	h=1000 mm
Depth of surfacing	ds=100 mm
Value of Young's modulus	EM=28000 N/mm²
Coefficient of expansion	alpha=12E-6 /°C
Number of cross-sections	ncs=1
Breadth at top	xbt(11)=1000 mm
Breadth at bottom	xbb(11)=1000 mm
Depth	xd(11)=1000 mm

Positive Temperature Calculations

Temperature gradient – increments of depth (Figure 6.2c, EN 1991-1-5)
Temperature values (Figure 6.2c & Table B.3 in EN 1991-1-5):

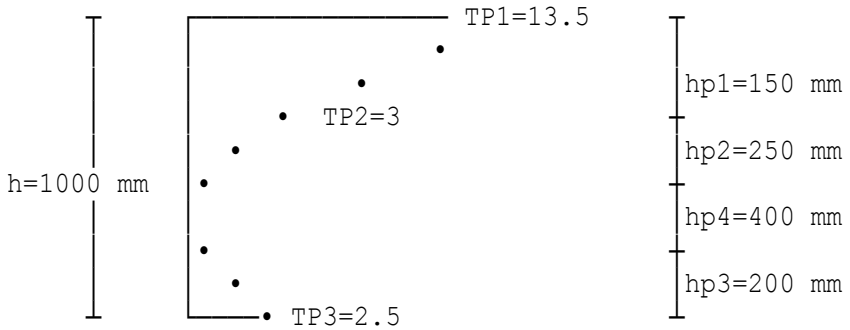

Positive temperature diagram

STRESSES (N/mm²) (tension is positive)

Depth from top	Restrained	Releasing force	Releasing moment	Self equilibrating
0	-4.536	0.6258	1.0832	-2.827
150	-1.008	0.6258	0.75823	0.37603
400	0	0.6258	0.21664	0.84244
800	0	0.6258	-0.64991	-0.024108
1000	-0.84	0.6258	-1.0832	-1.2974

Member length	L=10 m
Partial load factor (temperature)	gamma=0.8

Plane frame analysis

Axial and bending effects can be analysed in a plane frame model.
Bending effects for hogging releasing moment:
NOTE: The distortion should be input into the plane frame analysis using the MEMBER DISTORTIONS option with the following format.

<members> ROTATION Z -0.61896E-3

NOTE: The equilibrating stresses should be taken into account when the stresses at a section due to combinations of loading are calculated.
Longitudinal effects for tensile releasing force:
NOTE: The value should be input into the plane frame analysis using the MEMBER DISTORTIONS option with the following format.

<members> DISTORTION X 0.1788E-3

NOTE: The equilibrating stresses should be taken into account when the stresses at a section due to combinations of loading are calculated.

Reverse Temperature Calculations

Temperature gradient — increments of depth (Figure 6.2c, EN 1991-1-5)
Temperature values (Figure 6.2c & Table B.3 in EN 1991-1-5):

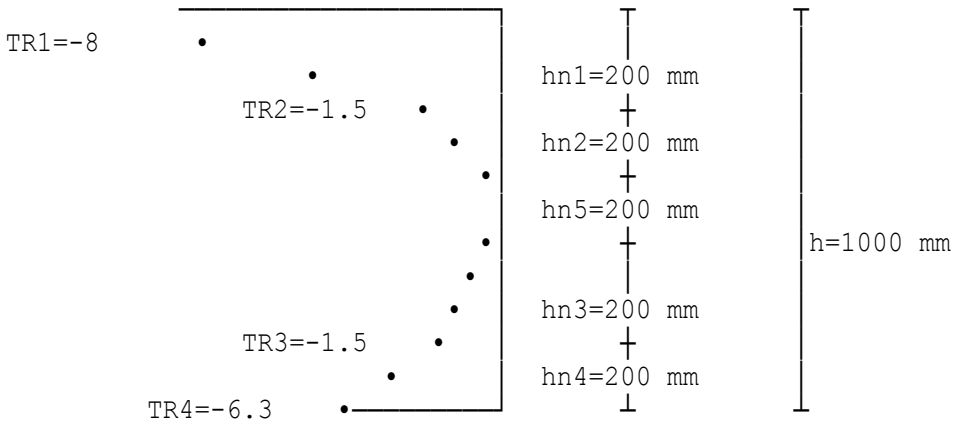

Reverse temperature diagram

STRESSES (N/mm²) (tension is positive)

Depth from top	Restrained	Releasing force	Releasing moment	Self equilibrating
0	2.688	-0.68208	-0.14851	1.8574
200	0.504	-0.68208	-0.089107	-0.26719
400	0	-0.68208	-0.029702	-0.71178
600	0	-0.68208	0.029702	-0.65238
800	0.504	-0.68208	0.089107	-0.088973
1000	2.1168	-0.68208	0.14851	1.5832

Member length L=10 m
Partial load factor (temperature) gamma=0.8

Plane frame analysis

Axial and bending effects can be analysed in a plane frame model.
Bending effects for sagging releasing moment:
NOTE: The distortion should be input into the plane frame analysis using the MEMBER DISTORTIONS option with the following format.

```
<members> ROTATION Z 84.864E-6
```

NOTE: The equilibrating stresses should be taken into account when the stresses at a section due to combinations of loading are calculated.
Longitudinal effects for compressive releasing force:
NOTE: The value should be input into the plane frame analysis using the MEMBER DISTORTIONS option with the following format.

```
<members> DISTORTION X -0.19488E-3
```

NOTE: The equilibrating stresses should be taken into account when the stresses at a section due to combinations of loading are calculated.

Location: Ex2 - I beam with 150mm surfacing

Differential temperature effects in concrete bridge decks

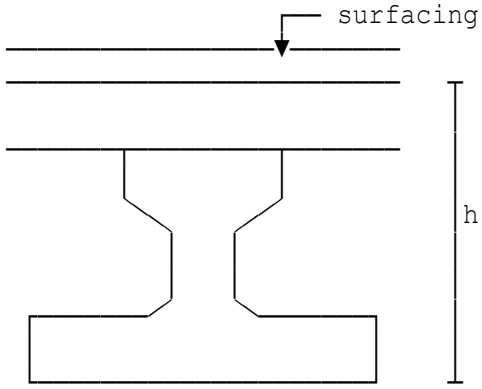

Deck on beams

Structural depth	h=1500 mm
Depth of surfacing	ds=150 mm
Number of cross-sections	ncs=5
Breadth at top	xbt(11)=1000 mm
Breadth at bottom	xbb(11)=1000 mm
Depth	xd(11)=250 mm
Young's modulus	E(11)=20000 N/mm²
Coefficient of expansion	coe(11)=10E-6 /°C
Breadth at top	xbt(21)=300 mm
Breadth at bottom	xbb(21)=200 mm
Depth	xd(21)=100 mm
Young's modulus	E(21)=22000 N/mm²
Coefficient of expansion	coe(21)=12E-6 /°C
Breadth at top	xbt(31)=200 mm
Breadth at bottom	xbb(31)=200 mm
Depth	xd(31)=700 mm
Young's modulus	E(31)=24000 N/mm²
Coefficient of expansion	coe(31)=11E-6 /°C
Breadth at top	xbt(41)=200 mm
Breadth at bottom	xbb(41)=300 mm
Depth	xd(41)=150 mm
Young's modulus	E(41)=28000 N/mm²
Coefficient of expansion	coe(41)=15E-6 /°C
Breadth at top	xbt(51)=1000 mm
Breadth at bottom	xbb(51)=1000 mm
Depth	xd(51)=300 mm
Young's modulus	E(51)=31000 N/mm²
Coefficient of expansion	coe(51)=13E-6 /°C

Positive Temperature Calculations

Temperature gradient – increments of depth (Figure 6.2c, EN 1991-1-5)
Temperature values (Figure 6.2c & Table B.3 in EN 1991-1-5):

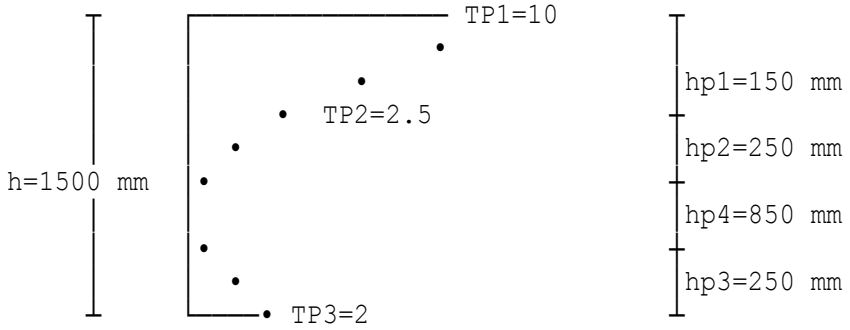

Positive temperature diagram

STRESSES (N/mm²) (tension is positive)

Depth from top	Restrained	Releasing force	Releasing moment	Self equilibrating
0	-2	0.34863	0.41505	-1.2363
150	-0.5	0.34863	0.34402	0.19265
150	-0.5	0.34863	0.34402	0.19265
250	-0.3	0.34863	0.29667	0.3453
250	-0.396	0.38349	0.32633	0.31383
350	-0.132	0.38349	0.27425	0.52574
350	-0.132	0.41836	0.29918	0.58553
400	0	0.41836	0.27077	0.68912
400	0	0.41836	0.27077	0.68912
1050	0	0.41836	-0.098579	0.31978
1050	0	0.48808	-0.11501	0.37307
1200	0	0.48808	-0.21445	0.27363
1200	0	0.54038	-0.23742	0.30295
1250	0	0.54038	-0.27412	0.26625
1250	0	0.54038	-0.27412	0.26625
1500	-0.806	0.54038	-0.45761	-0.72324

Member length L=12 m
Partial load factor (temperature) gamma=1

Plane frame analysis

Axial and bending effects can be analysed in a plane frame model.
Bending effects for hogging releasing moment:
NOTE: The distortion should be input into the plane frame analysis using the MEMBER DISTORTIONS option with the following format.

<members> ROTATION Z -0.28411E-3

NOTE: The equilibrating stresses should be taken into account when the stresses at a section due to combinations of loading are calculated.

Longitudinal effects for tensile releasing force:
NOTE: The value should be input into the plane frame analysis using the MEMBER DISTORTIONS option with the following format.

<members> DISTORTION X 0.20918E-3

NOTE: The equilibrating stresses should be taken into account when the stresses at a section due to combinations of loading are calculated.

Reverse Temperature Calculations

Temperature gradient – increments of depth (Figure 6.2c, EN 1991-1-5)
Temperature values (Figure 6.2c & Table B.3 in EN 1991-1-5):

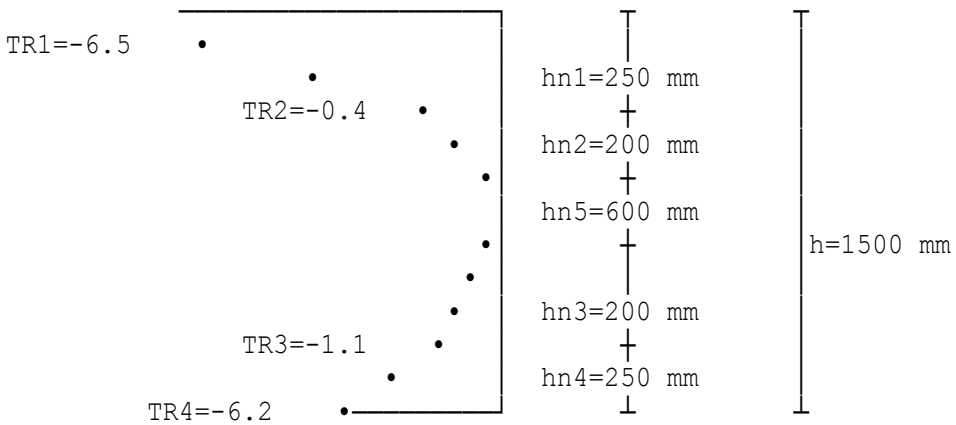

Reverse temperature diagram

STRESSES (N/mm²) (tension is positive)

Depth from top	Restrained	Releasing force	Releasing moment	Self equilibrating
0	1.3	-0.59098	0.20802	0.91704
250	0.08	-0.59098	0.14869	-0.36229
250	0.1056	-0.65008	0.16356	-0.38092
350	0.0528	-0.65008	0.13745	-0.45983
350	0.0528	-0.70918	0.14995	-0.50643
450	0	-0.70918	0.12147	-0.58771
450	0	-0.70918	0.12147	-0.58771
1050	0	-0.70918	-0.049407	-0.75858
1050	0	-0.82737	-0.057642	-0.88501
1200	0.3465	-0.82737	-0.10748	-0.58835
1200	0.33248	-0.91602	-0.119	-0.70254
1250	0.4433	-0.91602	-0.13739	-0.61011
1250	0.4433	-0.91602	-0.13739	-0.61011
1500	2.4986	-0.91602	-0.22935	1.3532

Member length L=12 m
Partial load factor (temperature) gamma=1

Plane frame analysis

Axial and bending effects can be analysed in a plane frame model.

Bending effects for hogging releasing moment:
NOTE: The distortion should be input into the plane frame analysis using the MEMBER DISTORTIONS option with the following format.

```
<members> ROTATION Z -0.1424E-3
```

NOTE: The equilibrating stresses should be taken into account when the stresses at a section due to combinations of loading are calculated.
Longitudinal effects for compressive releasing force:
NOTE: The value should be input into the plane frame analysis using the MEMBER DISTORTIONS option with the following format.

```
<members> DISTORTION X -0.35459E-3
```

NOTE: The equilibrating stresses should be taken into account when the stresses at a section due to combinations of loading are calculated.

Copyright 1986-2024 Fitzroy Systems Ltd.

Location: Ex3 - I beam with waterproofing

Differential temperature effects in concrete bridge decks

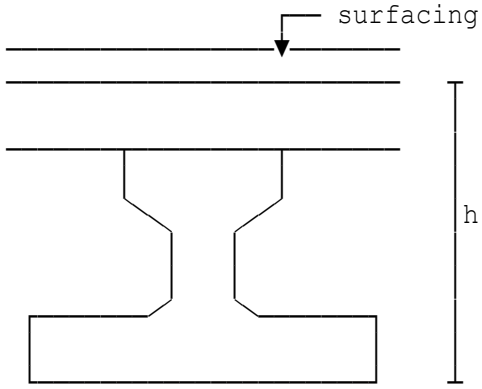

Deck on beams

Structural depth	h=1500 mm
Depth of surfacing	ds=-1 mm
Number of cross-sections	ncs=5
Breadth at top	xbt(11)=1000 mm
Breadth at bottom	xbb(11)=1000 mm
Depth	xd(11)=250 mm
Young's modulus	E(11)=20000 N/mm²
Coefficient of expansion	coe(11)=10E-6 /°C
Breadth at top	xbt(21)=300 mm
Breadth at bottom	xbb(21)=200 mm
Depth	xd(21)=100 mm
Young's modulus	E(21)=22000 N/mm²
Coefficient of expansion	coe(21)=12E-6 /°C
Breadth at top	xbt(31)=200 mm
Breadth at bottom	xbb(31)=200 mm
Depth	xd(31)=700 mm
Young's modulus	E(31)=24000 N/mm²
Coefficient of expansion	coe(31)=11E-6 /°C
Breadth at top	xbt(41)=200 mm
Breadth at bottom	xbb(41)=300 mm
Depth	xd(41)=150 mm
Young's modulus	E(41)=28000 N/mm²
Coefficient of expansion	coe(41)=15E-6 /°C
Breadth at top	xbt(51)=1000 mm
Breadth at bottom	xbb(51)=1000 mm
Depth	xd(51)=300 mm
Young's modulus	E(51)=31000 N/mm²
Coefficient of expansion	coe(51)=13E-6 /°C

Positive Temperature Calculations

Temperature gradient – increments of depth (Figure 6.2c, EN 1991-1-5)
Temperature values (Figure 6.2c & Table B.3 in EN 1991-1-5):

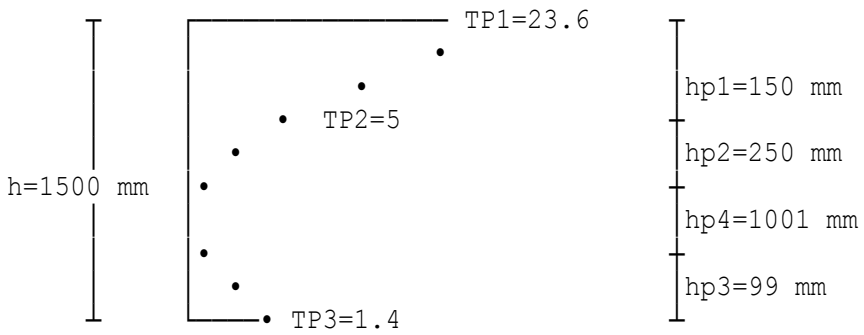

Positive temperature diagram

STRESSES (N/mm²) (tension is positive)

Depth from top	Restrained	Releasing force	Releasing moment	Self equilibrating
0	-4.72	0.57309	1.2666	-2.8803
150	-1	0.57309	1.0498	0.62293
150	-1	0.57309	1.0498	0.62293
250	-0.6	0.57309	0.90534	0.87843
250	-0.792	0.6304	0.99587	0.83427
350	-0.264	0.6304	0.83692	1.2033
350	-0.264	0.68771	0.913	1.3367
400	0	0.68771	0.8263	1.514
400	0	0.68771	0.8263	1.514
1050	0	0.68771	-0.30083	0.38688
1050	0	0.80233	-0.35097	0.45136
1200	0	0.80233	-0.65443	0.1479
1200	0	0.88829	-0.72455	0.16375
1401	0	0.88829	-1.1747	-0.28646
1401	0	0.88829	-1.1747	-0.28646
1500	-0.5642	0.88829	-1.3965	-1.0724

Member length L=12 m
Partial load factor (temperature) gamma=1

Grid analysis

Bending effects for hogging releasing moment:
NOTE: The distortion should be input into the grid analysis using the MEMBER DISTORTIONS option with the following format.

<members> ROTATION Y 0.86702E-3

NOTE: The equilibrating stresses should be taken into account when the stresses at a section due to combinations of loading are calculated.

Reverse Temperature Calculations

Temperature gradient – increments of depth (Figure 6.2c, EN 1991-1-5)
Temperature values (Figure 6.2c & Table B.3 in EN 1991-1-5):

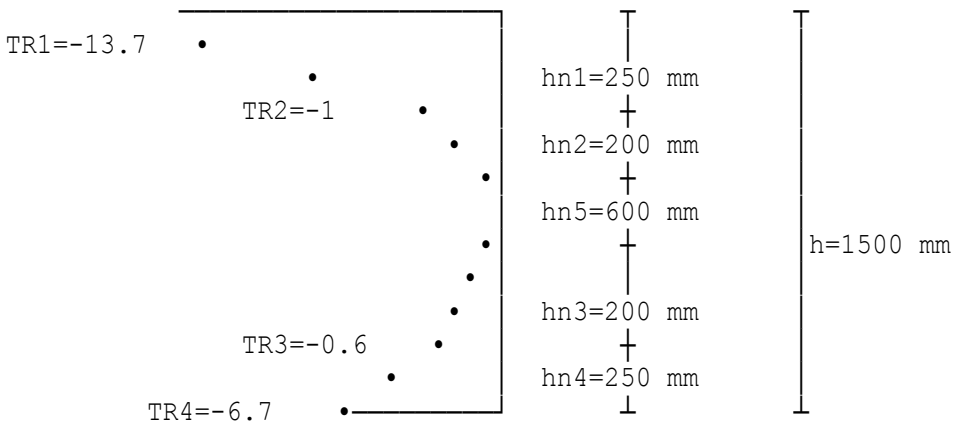

Reverse temperature diagram

STRESSES (N/mm²) (tension is positive)

Depth from top	Restrained	Releasing force	Releasing moment	Self equilibrating
0	2.74	-0.78502	-0.29368	1.6613
250	0.2	-0.78502	-0.20992	-0.79494
250	0.264	-0.86352	-0.23091	-0.83043
350	0.132	-0.86352	-0.19405	-0.92558
350	0.132	-0.94203	-0.2117	-1.0217
450	0	-0.94203	-0.17149	-1.1135
450	0	-0.94203	-0.17149	-1.1135
1050	0	-0.94203	0.069753	-0.87227
1050	0	-1.099	0.081379	-1.0177
1200	0.189	-1.099	0.15174	-0.75829
1200	0.18135	-1.2168	0.168	-0.86744
1250	0.2418	-1.2168	0.19397	-0.78102
1250	0.2418	-1.2168	0.19397	-0.78102
1500	2.7001	-1.2168	0.3238	1.8071

Member length L=12 m
Partial load factor (temperature) gamma=1

Grid analysis

Copyright 1986-2024 Fitzroy Systems Ltd.

Bending effects for sagging releasing moment:
NOTE: The distortion should be input into the grid analysis using the MEMBER DISTORTIONS option with the following format.

```
<members> ROTATION Y -0.20103E-3
```

NOTE: The equilibrating stresses should be taken into account when the stresses at a section due to combinations of loading are calculated.

Location: Ex4 - Deck on box girder

Differential temperature effects in concrete bridge decks

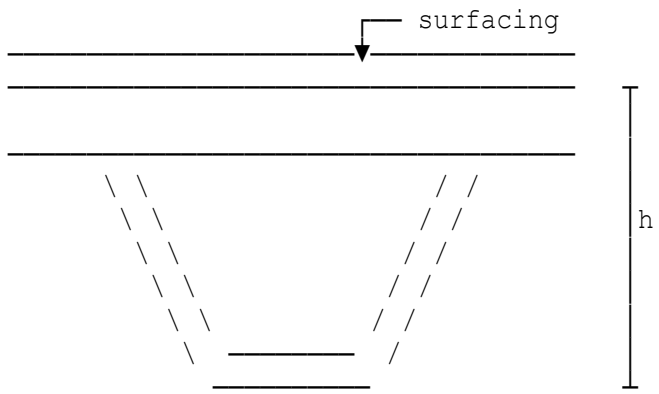

Deck on box girders

Structural depth	h=1500 mm
Depth of surfacing	ds=100 mm
Value of Young's modulus	EM=20000 N/mm²
Number of cross-sections	ncs=3
Breadth at top	xbt(11)=1000 mm
Breadth at bottom	xbb(11)=1000 mm
Depth	xd(11)=250 mm
Coefficient of expansion	coe(11)=10E-6 /°C
Breadth at top	xbt(21)=400 mm
Breadth at bottom	xbb(21)=400 mm
Depth	xd(21)=1000 mm
Coefficient of expansion	coe(21)=12E-6 /°C
Breadth at top	xbt(31)=800 mm
Breadth at bottom	xbb(31)=800 mm
Depth	xd(31)=250 mm
Coefficient of expansion	coe(31)=11E-6 /°C

Positive Temperature Calculations

Temperature gradient – increments of depth (Figure 6.2c, EN 1991-1-5)
Temperature values (Figure 6.2c & Table B.3 in EN 1991-1-5):

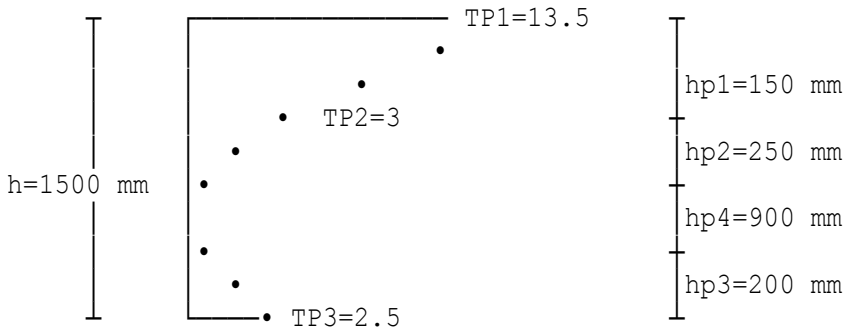

Positive temperature diagram

STRESSES (N/mm²) (tension is positive)

Depth from top	Restrained	Releasing force	Releasing moment	Self equilibrating
0	-2.7	0.41466	0.544	-1.7413
150	-0.6	0.41466	0.42959	0.24425
150	-0.6	0.41466	0.42959	0.24425
250	-0.36	0.41466	0.35332	0.40798
250	-0.432	0.41466	0.35332	0.33598
400	0	0.41466	0.23891	0.65357
400	0	0.41466	0.23891	0.65357
1250	0	0.41466	-0.4094	0.0052576
1250	0	0.41466	-0.4094	0.0052576
1300	0	0.41466	-0.44754	-0.032878
1300	0	0.41466	-0.44754	-0.032878
1500	-0.55	0.41466	-0.60008	-0.73542

Member length L=12 m
Partial load factor (temperature) gamma=1

Grid analysis

Bending effects for hogging releasing moment:
NOTE: The distortion should be input into the grid analysis using the MEMBER DISTORTIONS option with the following format.

<members> ROTATION Y 0.45763E-3

NOTE: The equilibrating stresses should be taken into account when the stresses at a section due to combinations of loading are calculated.

Reverse Temperature Calculations

Temperature gradient – increments of depth (Figure 6.2c, EN 1991-1-5)
Temperature values (Figure 6.2c & Table B.3 in EN 1991-1-5):

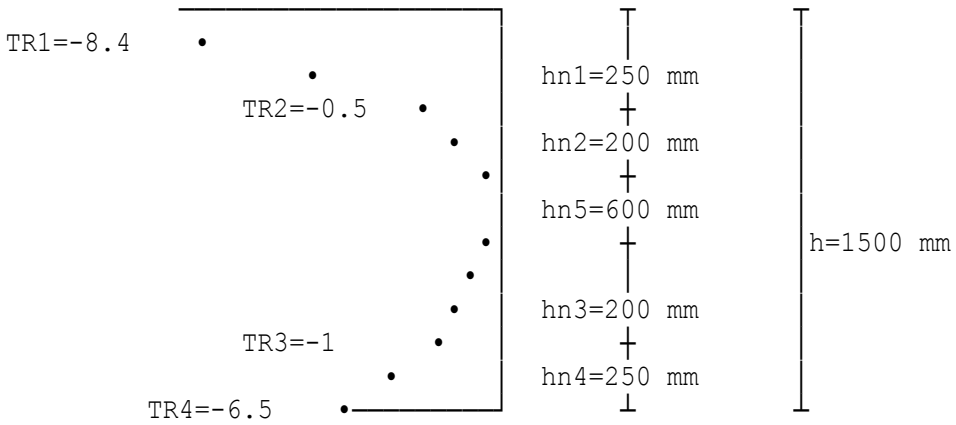

Reverse temperature diagram

STRESSES (N/mm²) (tension is positive)

Depth from top	Restrained	Releasing force	Releasing moment	Self equilibrating
0	1.68	-0.47282	-0.075523	1.1317
250	0.1	-0.47282	-0.049051	-0.42187
250	0.12	-0.47282	-0.049051	-0.40187
450	0	-0.47282	-0.027873	-0.5007
450	0	-0.47282	-0.027873	-0.5007
1050	0	-0.47282	0.035659	-0.43716
1050	0	-0.47282	0.035659	-0.43716
1250	0.24	-0.47282	0.056837	-0.17599
1250	0.22	-0.47282	0.056837	-0.19599
1500	1.43	-0.47282	0.083309	1.0405

Member length L=12 m
Partial load factor (temperature) gamma=1

Grid analysis

Bending effects for sagging releasing moment:
NOTE: The distortion should be input into the grid analysis using the MEMBER DISTORTIONS option with the following format.

<members> ROTATION Y -63.533E-6

NOTE: The equilibrating stresses should be taken into account when the stresses at a section due to combinations of loading are calculated.

Copyright 1986-2024 Fitzroy Systems Ltd.

Location: Ex1 - Single carriageway

Type HA uniformly distributed loading (UDL)

and knife edge loading (KEL)

The calculations are in accordance with the composite version of BS 5400-2:2006 entitled "Steel, concrete and composite bridges" and produce the Type HA lane loading. Unless noted otherwise, references are to BS 5400-2:2006.

Number of carriageways on superstructure noc=1
Width of carriageway cw(1)=2.8 m
Loaded length for HA UDL ll=40 m
Loaded length is less than 50m
Nominal HA UDL expressed in kN/m (per notional lane).
HA UDL W=336*(1/ll)^0.67=28.377 kN/m
Knife Edge Load (KEL) KEL=120 kN (per notional lane)

Loading for carriageway

	Factor β	Nominal HA UDL (kN/m) per lane	Factored HA UDL (kN/m) per lane	Nominal KEL (kN) per lane	Factored KEL (kN) per lane
First Lane	1	28.377	28.377	120	120
Remaining area	1.0	kN/m² 5.00	kN/m² 5.00	-	-

Lane Loadings

Copyright 1986-2024 Fitzroy Systems Ltd.

Location: Ex2 - Dual carriageway

Type HA uniformly distributed loading (UDL)

and knife edge loading (KEL)

The calculations are in accordance with the composite version of BS 5400-2:2006 entitled "Steel, concrete and composite bridges" and produce the Type HA lane loading. Unless noted otherwise, references are to BS 5400-2:2006.

Number of carriageways on superstructure noc=2
Width of carriageway cw(1)=15 m
Width of carriageway cw(2)=15 m
Loaded length for HA UDL ll=120 m
Loaded length is greater than or equal to 50m
Nominal HA UDL expressed in kN/m (per notional lane).
HA UDL W=36*(1/ll)^0.10=22.304 kN/m
Knife Edge Load (KEL) KEL=120 kN (per notional lane)

Loading for carriageways

	Factor β	Nominal HA UDL (kN/m) per lane	Factored HA UDL (kN/m) per lane	Nominal KEL (kN) per lane	Factored KEL (kN) per lane
First Lane	1	22.304	22.304	120	120
Second Lane	1	22.304	22.304	120	120
Third Lane	0.6	22.304	13.382	120	72
Fourth and subsequent lanes	0.6	22.304	13.382	120	72

Lane Loadings

Copyright 1986-2024 Fitzroy Systems Ltd.

Location: Ex3 - Dual carriageway

Type HA uniformly distributed loading (UDL)

and knife edge loading (KEL)

The calculations are in accordance with the composite version of BS 5400-2:2006 entitled "Steel, concrete and composite bridges" and produce the Type HA lane loading. Unless noted otherwise, references are to BS 5400-2:2006.

Number of carriageways on superstructure noc=2
Width of carriageway cw(1)=4.5 m
Width of carriageway cw(2)=4.5 m
Loaded length for HA UDL ll=140 m
Loaded length is greater than or equal to 50m
Nominal HA UDL expressed in kN/m (per notional lane).
HA UDL W=36*(1/ll)^0.10=21.963 kN/m
Knife Edge Load (KEL) KEL=120 kN (per notional lane)

Loading for carriageways

	Factor β	Nominal HA UDL (kN/m) per lane	Factored HA UDL (kN/m) per lane	Nominal KEL (kN) per lane	Factored KEL (kN) per lane
First Lane	1	21.963	21.963	120	120
Second Lane	1	21.963	21.963	120	120
		kN/m²	kN/m²		
Remaining area	1.0	5.00	5.00	-	-

Lane Loadings

Location: Ex4 - Dual carriageway

Type HA uniformly distributed loading (UDL)

and knife edge loading (KEL)

The calculations are in accordance with the composite version of BS 5400-2:2006 entitled "Steel, concrete and composite bridges" and produce the Type HA lane loading. Unless noted otherwise, references are to BS 5400-2:2006.

Number of carriageways on superstructure	noc=2
Width of carriageway	cw(1)=11 m
Width of carriageway	cw(2)=15 m
Loaded length for HA UDL	ll=142 m

Loaded length is greater than or equal to 50m

Nominal HA UDL expressed in kN/m (per notional lane).

HA UDL	W=36*(1/ll)^0.10=21.932 kN/m
Knife Edge Load (KEL)	KEL=120 kN (per notional lane)

Copyright 1986-2024 Fitzroy Systems Ltd.

Loading for carriageway 1

	Factor β	Nominal HA UDL (kN/m) per lane	Factored HA UDL (kN/m) per lane	Nominal KEL (kN) per lane	Factored KEL (kN) per lane
First Lane	1	21.932	21.932	120	120
Second Lane	1	21.932	21.932	120	120
Third Lane	0.6	21.932	13.159	120	72
Fourth and subsequent lanes	0.6	21.932	13.159	120	72

Lane Loadings

Loading for carriageway 2

	Factor β	Nominal HA UDL (kN/m) per lane	Factored HA UDL (kN/m) per lane	Nominal KEL (kN) per lane	Factored KEL (kN) per lane
First Lane	1	21.932	21.932	120	120
Second Lane	1	21.932	21.932	120	120
Third Lane	0.6	21.932	13.159	120	72
Fourth and subsequent lanes	0.6	21.932	13.159	120	72

Lane Loadings

Copyright 1986-2024 Fitzroy Systems Ltd.

Location: Ex5 - Dual carriageway

Type HA uniformly distributed loading (UDL)

and knife edge loading (KEL)

The calculations are in accordance with the composite version of BS 5400-2:2006 entitled "Steel, concrete and composite bridges" and produce the Type HA lane loading. Unless noted otherwise, references are to BS 5400-2:2006.

Number of carriageways on superstructure noc=2
Width of carriageway cw(1)=4.5 m
Width of carriageway cw(2)=3.5 m
Loaded length for HA UDL ll=45 m
Loaded length is less than 50m
Nominal HA UDL expressed in kN/m (per notional lane).
HA UDL W=336*(1/ll)^0.67=26.223 kN/m
Knife Edge Load (KEL) KEL=120 kN (per notional lane)

Loading for carriageways

	Factor β	Nominal HA UDL (kN/m) per lane	Factored HA UDL (kN/m) per lane	Nominal KEL (kN) per lane	Factored KEL (kN) per lane
First Lane	1	26.223	26.223	120	120
Second Lane	1	26.223	26.223	120	120
		kN/m²	kN/m²		
Remaining area	1.0	5.00	5.00	-	-

Lane Loadings

Location: Ex6 - Dual carriageway

Type HA uniformly distributed loading (UDL)

and knife edge loading (KEL)

The calculations are in accordance with the composite version of BS 5400-2:2006 entitled "Steel, concrete and composite bridges" and produce the Type HA lane loading. Unless noted otherwise, references are to BS 5400-2:2006.

Number of carriageways on superstructure	noc=2
Width of carriageway	cw(1)=7.8 m
Width of carriageway	cw(2)=4 m
Loaded length for HA UDL	ll=30 m

Loaded length is less than 50m

Nominal HA UDL expressed in kN/m (per notional lane).

HA UDL	W=336*(1/ll)^0.67=34.409 kN/m
Knife Edge Load (KEL)	KEL=120 kN (per notional lane)

Loading for carriageway 1

	Factor β	Nominal HA UDL (kN/m) per lane	Factored HA UDL (kN/m) per lane	Nominal KEL (kN) per lane	Factored KEL (kN) per lane
First Lane	0.85616	34.409	29.459	120	102.74
Second Lane	0.85616	34.409	29.459	120	102.74
Third Lane	0.6	34.409	20.645	120	72
Fourth and subsequent lanes	0.5137	34.409	17.676	120	61.644

Lane Loadings

Loading for carriageway 2

	Factor β	Nominal HA UDL (kN/m) per lane	Factored HA UDL (kN/m) per lane	Nominal KEL (kN) per lane	Factored KEL (kN) per lane
First Lane	0.84247	34.409	28.988	120	101.1
Second Lane	0.84247	34.409	28.988	120	101.1
Third Lane	0.84247	34.409	28.988	120	101.1
Fourth and subsequent lanes	0.84247	34.409	28.988	120	101.1
Remaining area	1.0	kN/m²	kN/m²	-	-
		5.00	5.00		

Lane Loadings

Copyright 1986-2024 Fitzroy Systems Ltd.

Location: Ex7 - Dual carriageway

Type HA uniformly distributed loading (UDL)

and knife edge loading (KEL)

The calculations are in accordance with the composite version of BS 5400-2:2006 entitled "Steel, concrete and composite bridges" and produce the Type HA lane loading. Unless noted otherwise, references are to BS 5400-2:2006.

Number of carriageways on superstructure	noc=2
Width of carriageway	cw(1)=4.2 m
Width of carriageway	cw(2)=8.5 m
Loaded length for HA UDL	ll=5 m

Loaded length is less than 50m

Nominal HA UDL expressed in kN/m (per notional lane).

HA UDL	W=336*(1/ll)^0.67=114.3 kN/m
Knife Edge Load (KEL)	KEL=120 kN (per notional lane)

Copyright 1986-2024 Fitzroy Systems Ltd.

Loading for carriageway 1

	Factor β	Nominal HA UDL (kN/m) per lane	Factored HA UDL (kN/m) per lane	Nominal KEL (kN) per lane	Factored KEL (kN) per lane
First Lane	0.68493	114.3	78.285	120	82.192
Second Lane	0.68493	114.3	78.285	120	82.192
Third Lane	0.68493	114.3	78.285	120	82.192
Fourth and subsequent lanes	0.68493	114.3	78.285	120	82.192
Remaining area	1.0	kN/m²	kN/m²	-	-
		5.00	5.00		

Lane Loadings

Loading for carriageway 2

	Factor β	Nominal HA UDL (kN/m) per lane	Factored HA UDL (kN/m) per lane	Nominal KEL (kN) per lane	Factored KEL (kN) per lane
First Lane	0.77626	114.3	88.723	120	93.151
Second Lane	0.77626	114.3	88.723	120	93.151
Third Lane	0.6	114.3	68.577	120	72
Fourth and subsequent lanes	0.46575	114.3	53.234	120	55.89

Lane Loadings

Location: Ex8 - Single carriageway

Type HA uniformly distributed loading (UDL)

and knife edge loading (KEL)

The calculations are in accordance with the composite version of BS 5400-2:2006 entitled "Steel, concrete and composite bridges" and produce the Type HA lane loading. Unless noted otherwise, references are to BS 5400-2:2006.

Number of carriageways on superstructure noc=1
Width of carriageway cw(1)=15 m
Loaded length for HA UDL ll=60 m
Loaded length is greater than or equal to 50m
Nominal HA UDL expressed in kN/m (per notional lane).
HA UDL W=36*(1/ll)^0.10=23.905 kN/m
Knife Edge Load (KEL) KEL=120 kN (per notional lane)

Loading for carriageway

	Factor β	Nominal HA UDL (kN/m) per lane	Factored HA UDL (kN/m) per lane	Nominal KEL (kN) per lane	Factored KEL (kN) per lane
First Lane	1	23.905	23.905	120	120
Second Lane	1	23.905	23.905	120	120
Third Lane	0.6	23.905	14.343	120	72
Fourth and subsequent lanes	0.6	23.905	14.343	120	72

Lane Loadings

Location: Ex1 - Single carriageway

Load Model 1 (LM1) - concentrated & uniformly distributed loading

The calculations are in accordance with BS EN 1991-2:2003 and the NA to BS EN 1991-2:2003 entitled Eurocode 1: Actions on structures Part 2: Traffic loads on bridges. Load model 1 represents normal loading (normal traffic) and comprises of two components: a UDL over the full width of the traffic lane and a pair of axles (this is also referred to as a Tandem System TS). In each lane (up to a maximum of three lanes) a pair of axles should be positioned centrally in the lane at a position along the lane that causes maximum adverse effect (Clause 4.3.1 & 4.3.2). Load Model 3 (LM3) represents abnormal vehicles, also needs to be considered where appropriate. The latter is beyond the scope of this proforma.

Number of carriageways	noc=1
Width of carriageway	cw(1)=3 m
Loaded length for UDL	ll=40 m

Loading for carriageway - characteristic values

	Adjustment factor αq1	UDL system (kN/m²)	Adjustment factor αQ1	Tandem system TS Axle loads
First Lane	0.61	5.49	1	300 kN

Lane Loadings

NOTE: It is probably much easier to apply a Knife Edge Load (KEL) for each axle (i.e. distribute the weight of one axle along a line across the lane) than two isolated wheel loads, and this is considered to be adequate for global analysis. For carriageway Lane 1, the four wheels of the tandems together weigh 600 kN (i.e. 150 kN per wheel).

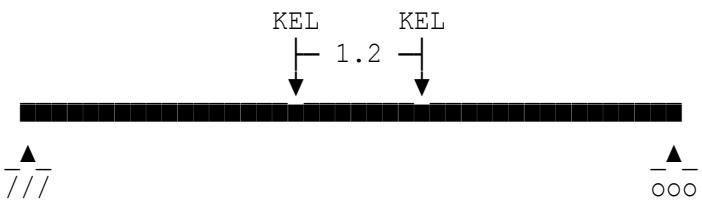

Lane 1: Loads per metre width of deck

Carriageway 1:
KEL=Q1k/wl(1)=100 kN
UDL=5.49 kN/m

Axles spaced at 1.2 m apart

Location: Ex2 - Dual carriageway

Load Model 1 (LM1) - concentrated & uniformly distributed loading

The calculations are in accordance with BS EN 1991-2:2003 and the NA to BS EN 1991-2:2003 entitled Eurocode 1: Actions on structures Part 2: Traffic loads on bridges. Load model 1 represents normal loading (normal traffic) and comprises of two components: a UDL over the full width of the traffic lane and a pair of axles (this is also referred to as a Tandem System TS). In each lane (up to a maximum of three lanes) a pair of axles should be positioned centrally in the lane at a position along the lane that causes maximum adverse effect (Clause 4.3.1 & 4.3.2). Load Model 3 (LM3) represents abnormal vehicles, also needs to be considered where appropriate. The latter is beyond the scope of this proforma.

Number of carriageways	noc=2
Width of carriageway	cw(1)=15 m
Width of carriageway	cw(2)=15 m
Loaded length for UDL	ll=120 m

Loading for carriageways - characteristic values

	Adjustment factor αq1	UDL system (kN/m²)	Adjustment factor αQ1	Tandem system TS Axle loads
First Lane	0.61	5.49	1	300 kN
Second Lane	2.2	5.5	1	200 kN
Third Lane	2.2	5.5	1	100 kN
Fourth and subsequent lanes	2.2	5.5	-	0

Lane Loadings

NOTE: It is probably much easier to apply a Knife Edge Load (KEL) for each axle (i.e. distribute the weight of one axle along a line across the lane) than two isolated wheel loads, and this is considered to be adequate for global analysis. For carriageway Lane 1, the four wheels of the tandems together weigh 600 kN (i.e. 150 kN per wheel).

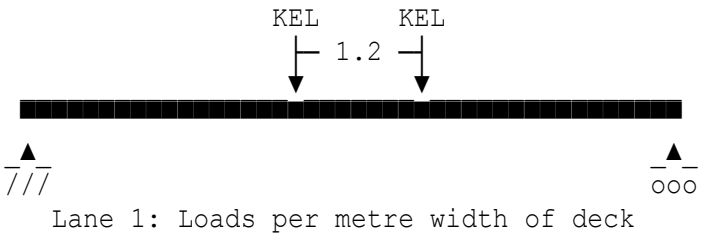

Lane 1: Loads per metre width of deck
axles spaced at 1.2 m apart

Carriageway 1:
KEL=Q1k/wl(1)=100 kN
UDL=5.49 kN/m
Carriageway 2:
KEL=Q1k/wl(2)=100 kN
UDL=5.49 kN/m

Copyright 1986-2024 Fitzroy Systems Ltd.

Location: Ex3 - Dual carriageway

Load Model 1 (LM1) - concentrated & uniformly distributed loading

The calculations are in accordance with BS EN 1991-2:2003 and the NA to BS EN 1991-2:2003 entitled Eurocode 1: Actions on structures Part 2: Traffic loads on bridges. Load model 1 represents normal loading (normal traffic) and comprises of two components: a UDL over the full width of the traffic lane and a pair of axles (this is also referred to as a Tandem System TS). In each lane (up to a maximum of three lanes) a pair of axles should be positioned centrally in the lane at a position along the lane that causes maximum adverse effect (Clause 4.3.1 & 4.3.2). Load Model 3 (LM3) represents abnormal vehicles, also needs to be considered where appropriate. The latter is beyond the scope of this proforma.

Number of carriageways	noc=2
Width of carriageway	cw(1)=4.5 m
Width of carriageway	cw(2)=4.5 m
Loaded length for UDL	ll=140 m

Loading for carriageways - characteristic values

	Adjustment factor αq1	UDL system (kN/m²)	Adjustment factor αQ1	Tandem system TS Axle loads
First Lane	0.61	5.49	1	300 kN
Second Lane	2.2	5.5	1	200 kN
Remaining area	2.2	5.5	-	0

Lane Loadings

NOTE: It is probably much easier to apply a Knife Edge Load (KEL) for each axle (i.e. distribute the weight of one axle along a line across the lane) than two isolated wheel loads, and this is considered to be adequate for global analysis. For carriageway Lane 1, the four wheels of the tandems together weigh 600 kN (i.e. 150 kN per wheel).

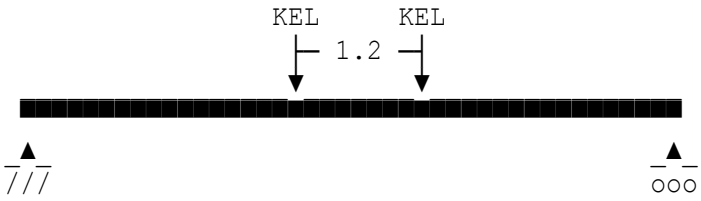

Lane 1: Loads per metre width of deck
axles spaced at 1.2 m apart

Carriageway 1:
KEL=Q1k/wl(1)=100 kN
UDL=5.49 kN/m
Carriageway 2:
KEL=Q1k/wl(2)=100 kN
UDL=5.49 kN/m

Location: Ex4 - Dual carriageway

Load Model 1 (LM1) - concentrated & uniformly distributed loading

The calculations are in accordance with BS EN 1991-2:2003 and the NA to BS EN 1991-2:2003 entitled Eurocode 1: Actions on structures Part 2: Traffic loads on bridges. Load model 1 represents normal loading (normal traffic) and comprises of two components: a UDL over the full width of the traffic lane and a pair of axles (this is also referred to as a Tandem System TS). In each lane (up to a maximum of three lanes) a pair of axles should be positioned centrally in the lane at a position along the lane that causes maximum adverse effect (Clause 4.3.1 & 4.3.2). Load Model 3 (LM3) represents abnormal vehicles, also needs to be considered where appropriate. The latter is beyond the scope of this proforma.

Number of carriageways noc=2
Width of carriageway cw(1)=11 m
Width of carriageway cw(2)=15 m
Loaded length for UDL ll=142 m

Loading for carriageways - characteristic values

	Adjustment factor αq1	UDL system (kN/m²)	Adjustment factor αQ1	Tandem system TS Axle loads
First Lane	0.61	5.49	1	300 kN
Second Lane	2.2	5.5	1	200 kN
Third Lane	2.2	5.5	1	100 kN
Fourth and subsequent lanes	2.2	5.5	-	0
Remaining area	2.2	5.5	-	0

Lane Loadings

NOTE: It is probably much easier to apply a Knife Edge Load (KEL) for each axle (i.e. distribute the weight of one axle along a line across the lane) than two isolated wheel loads, and this is considered to be adequate for global analysis. For carriageway Lane 1, the four wheels of the tandems together weigh 600 kN (i.e. 150 kN per wheel).

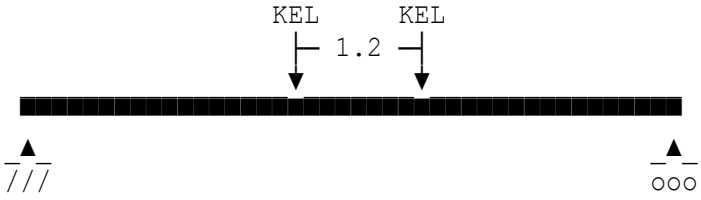

Lane 1: Loads per metre width of deck
axles spaced at 1.2 m apart

Carriageway 1:
KEL=Q1k/wl(1)=100 kN
UDL=5.49 kN/m
Carriageway 2:
KEL=Q1k/wl(2)=100 kN
UDL=5.49 kN/m

Copyright 1986-2024 Fitzroy Systems Ltd.

Location: Ex5 - Dual carriageway

Load Model 1 (LM1) - concentrated & uniformly distributed loading

The calculations are in accordance with BS EN 1991-2:2003 and the NA to BS EN 1991-2:2003 entitled Eurocode 1: Actions on structures Part 2: Traffic loads on bridges. Load model 1 represents normal loading (normal traffic) and comprises of two components: a UDL over the full width of the traffic lane and a pair of axles (this is also referred to as a Tandem System TS). In each lane (up to a maximum of three lanes) a pair of axles should be positioned centrally in the lane at a position along the lane that causes maximum adverse effect (Clause 4.3.1 & 4.3.2). Load Model 3 (LM3) represents abnormal vehicles, also needs to be considered where appropriate. The latter is beyond the scope of this proforma.

Number of carriageways	noc=2
Width of carriageway	cw(1)=4.5 m
Width of carriageway	cw(2)=3.5 m
Loaded length for UDL	ll=45 m

Loading for carriageways - characteristic values

	Adjustment factor αq1	UDL system (kN/m²)	Adjustment factor αQ1	Tandem system TS Axle loads
First Lane	0.61	5.49	1	300 kN
Second Lane	2.2	5.5	1	200 kN
Remaining area	2.2	5.5	-	0

Lane Loadings

NOTE: It is probably much easier to apply a Knife Edge Load (KEL) for each axle (i.e. distribute the weight of one axle along a line across the lane) than two isolated wheel loads, and this is considered to be adequate for global analysis. For carriageway Lane 1, the four wheels of the tandems together weigh 600 kN (i.e. 150 kN per wheel).

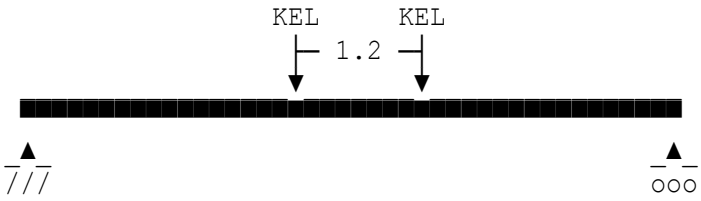

Lane 1: Loads per metre width of deck
axles spaced at 1.2 m apart

Carriageway 1:
KEL=Q1k/wl(1)=100 kN
UDL=5.49 kN/m
Carriageway 2:
KEL=Q1k/wl(2)=100 kN
UDL=5.49 kN/m

Location: Ex6 - Dual carriageway

Load Model 1 (LM1) - concentrated & uniformly distributed loading

The calculations are in accordance with BS EN 1991-2:2003 and the NA to BS EN 1991-2:2003 entitled Eurocode 1: Actions on structures Part 2: Traffic loads on bridges. Load model 1 represents normal loading (normal traffic) and comprises of two components: a UDL over the full width of the traffic lane and a pair of axles (this is also referred to as a Tandem System TS). In each lane (up to a maximum of three lanes) a pair of axles should be positioned centrally in the lane at a position along the lane that causes maximum adverse effect (Clause 4.3.1 & 4.3.2). Load Model 3 (LM3) represents abnormal vehicles, also needs to be considered where appropriate. The latter is beyond the scope of this proforma.

Number of carriageways noc=2
Width of carriageway cw(1)=7.8 m
Width of carriageway cw(2)=4 m
Loaded length for UDL ll=30 m

Loading for carriageway 1 - characteristic values

	Adjustment factor αq1	UDL system (kN/m²)	Adjustment factor αQ1	Tandem system TS Axle loads
First Lane	0.61	5.49	1	300 kN
Second Lane	2.2	5.5	1	200 kN
Third Lane	2.2	5.5	1	100 kN
Remaining area	2.2	5.5	-	0

Lane Loadings

	Adjustment factor αq1	UDL system (kN/m²)	Adjustment factor αQ1	Tandem system TS Axle loads
First Lane	0.61	5.49	1	300 kN
Second Lane	2.2	5.5	1	200 kN
Third Lane	2.2	5.5	1	100 kN
Remaining area	2.2	5.5	-	0

Lane Loadings

NOTE: It is probably much easier to apply a Knife Edge Load (KEL) for each axle (i.e. distribute the weight of one axle along a line across the lane) than two isolated wheel loads, and this is considered to be adequate for global analysis. For carriageway Lane 1, the four wheels of the tandems together weigh 600 kN (i.e. 150 kN per wheel).

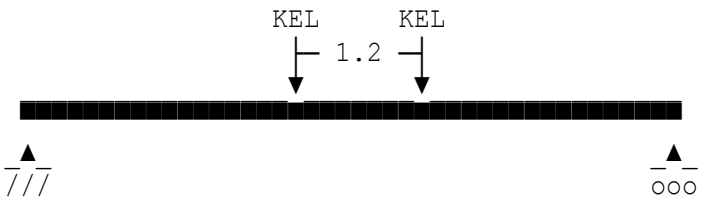

Carriageway 1:
KEL=Q1k/wl(1)=100 kN
UDL=5.49 kN/m
Carriageway 2:
KEL=Q1k/wl(2)=100 kN
UDL=5.49 kN/m

Lane 1: Loads per metre width of deck
axles spaced at 1.2 m apart

Copyright 1986-2024 Fitzroy Systems Ltd.

Location: Ex7 - Dual carriageway

Load Model 1 (LM1) - concentrated & uniformly distributed loading

The calculations are in accordance with BS EN 1991-2:2003 and the NA to BS EN 1991-2:2003 entitled Eurocode 1: Actions on structures Part 2: Traffic loads on bridges. Load model 1 represents normal loading (normal traffic) and comprises of two components: a UDL over the full width of the traffic lane and a pair of axles (this is also referred to as a Tandem System TS). In each lane (up to a maximum of three lanes) a pair of axles should be positioned centrally in the lane at a position along the lane that causes maximum adverse effect (Clause 4.3.1 & 4.3.2). Load Model 3 (LM3) represents abnormal vehicles, also needs to be considered where appropriate. The latter is beyond the scope of this proforma.

Number of carriageways	noc=2
Width of carriageway	cw(1)=4.2 m
Width of carriageway	cw(2)=8.5 m
Loaded length for UDL	ll=5 m

Loading for carriageway 1 - characteristic values

	Adjustment factor αq1	UDL system (kN/m²)	Adjustment factor αQ1	Tandem system TS Axle loads
First Lane	0.61	5.49	1	300 kN
Second Lane	2.2	5.5	1	200 kN
Third Lane	2.2	5.5	1	100 kN
Remaining area	2.2	5.5	-	0

Lane Loadings

Loading for carriageway 2 - characteristic values

	Adjustment factor αq1	UDL system (kN/m²)	Adjustment factor αQ1	Tandem system TS Axle loads
First Lane	0.61	5.49	1	300 kN
Second Lane	2.2	5.5	1	200 kN
Third Lane	2.2	5.5	1	100 kN
Remaining area	2.2	5.5	-	0

Lane Loadings

NOTE: It is probably much easier to apply a Knife Edge Load (KEL) for each axle (i.e. distribute the weight of one axle along a line across the lane) than two isolated wheel loads, and this is considered to be adequate for global analysis. For carriageway Lane 1, the four wheels of the tandems together weigh 600 kN (i.e. 150 kN per wheel).

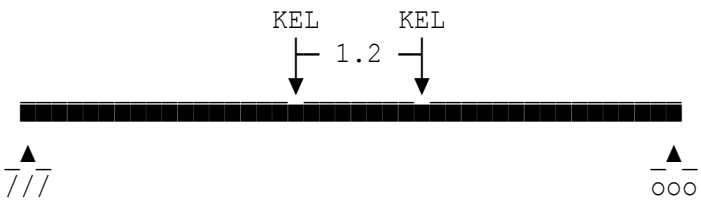

Carriageway 1:
KEL=Q1k/wl(1)=100 kN
UDL=5.49 kN/m
Carriageway 2:
KEL=Q1k/wl(2)=100 kN
UDL=5.49 kN/m

Lane 1: Loads per metre width of deck
axles spaced at 1.2 m apart

Location: Ex8 - Single carriageway

Load Model 1 (LM1) - concentrated & uniformly distributed loading

The calculations are in accordance with BS EN 1991-2:2003 and the NA to BS EN 1991-2:2003 entitled Eurocode 1: Actions on structures Part 2: Traffic loads on bridges. Load model 1 represents normal loading (normal traffic) and comprises of two components: a UDL over the full width of the traffic lane and a pair of axles (this is also referred to as a Tandem System TS). In each lane (up to a maximum of three lanes) a pair of axles should be positioned centrally in the lane at a position along the lane that causes maximum adverse effect (Clause 4.3.1 & 4.3.2). Load Model 3 (LM3) represents abnormal vehicles, also needs to be considered where appropriate. The latter is beyond the scope of this proforma.

Number of carriageways noc=1
Width of carriageway cw(1)=15 m
Loaded length for UDL ll=60 m

Loading for carriageway - characteristic values

	Adjustment factor αq1	UDL system (kN/m²)	Adjustment factor αQ1	Tandem system TS Axle loads
First Lane	0.61	5.49	1	300 kN
Second Lane	2.2	5.5	1	200 kN
Third Lane	2.2	5.5	1	100 kN
Fourth and subsequent lanes	2.2	5.5	-	0

Lane Loadings

NOTE: It is probably much easier to apply a Knife Edge Load (KEL) for each axle (i.e. distribute the weight of one axle along a line across the lane) than two isolated wheel loads, and this is considered to be adequate for global analysis. For carriageway Lane 1, the four wheels of the tandems together weigh 600 kN (i.e. 150 kN per wheel).

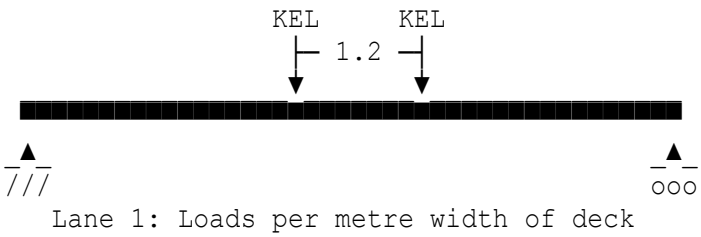

Lane 1: Loads per metre width of deck

Carriageway 1:
KEL=Q1k/wl(1)=100 kN
UDL=5.49 kN/m

Axles spaced at 1.2 m apart

Location: Ex9 - Dual carriageway

Load Model 1 (LM1) - concentrated & uniformly distributed loading

The calculations are in accordance with BS EN 1991-2:2003 and the NA to BS EN 1991-2:2003 entitled Eurocode 1: Actions on structures Part 2: Traffic loads on bridges. Load model 1 represents normal loading (normal traffic) and comprises of two components: a UDL over the full width of the traffic lane and a pair of axles (this is also referred to as a Tandem System TS). In each lane (up to a maximum of three lanes) a pair of axles should be positioned centrally in the lane at a position along the lane that causes maximum adverse effect (Clause 4.3.1 & 4.3.2). Load Model 3 (LM3) represents abnormal vehicles, also needs to be considered where appropriate. The latter is beyond the scope of this proforma.

Number of carriageways noc=2
Width of carriageway cw(1)=7.8 m
Width of carriageway cw(2)=5.4 m
Loaded length for UDL ll=30 m

Loading for carriageway 1 - characteristic values

	Adjustment factor αq1	UDL system (kN/m²)	Adjustment factor αQ1	Tandem system TS Axle loads
First Lane	0.61	5.49	1	300 kN
Second Lane	2.2	5.5	1	200 kN
Third Lane	2.2	5.5	1	100 kN
Fourth and subsequent lanes	2.2	5.5	-	0
Remaining area	2.2	5.5	-	0

Lane Loadings

Loading for carriageway 2 - characteristic values

	Adjustment factor αq1	UDL system (kN/m²)	Adjustment factor αQ1	Tandem system TS Axle loads
First Lane	0.61	5.49	1	300 kN
Second Lane	2.2	5.5	1	200 kN
Third Lane	2.2	5.5	1	100 kN
Fourth and subsequent lanes	2.2	5.5	-	0
Remaining area	2.2	5.5	-	0

Lane Loadings

NOTE: It is probably much easier to apply a Knife Edge Load (KEL) for each axle (i.e. distribute the weight of one axle along a line across the lane) than two isolated wheel loads, and this is considered to be adequate for global analysis. For carriageway Lane 1, the four wheels of the tandems together weigh 600 kN (i.e. 150 kN per wheel).

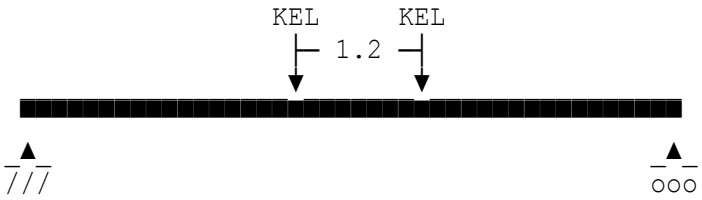

Lane 1: Loads per metre width of deck
axles spaced at 1.2 m apart

Carriageway 1:
KEL=Q1k/wl(1)=100 kN
UDL=5.49 kN/m
Carriageway 2:
KEL=Q1k/wl(2)=111.11 kN
UDL=5.49 kN/m

Copyright 1986-2024 Fitzroy Systems Ltd.

Location: Single carriageway

Type HA uniformly distributed loading (UDL)

and knife edge loading (KEL); Load Reduction K-factors

Highway carriageway and lanes

Number of carriageways on superstructure noc=1
Width of carriageway cw(1)=2.8 m

Loading for carriageway

Loaded length for HA UDL ll=40 m

Factored HA Load = (Nominal HA Load) x (Lane Factor)

	Lane Factor	Nominal HA UDL (kN/m) per lane	Factored HA UDL (kN/m) per lane	Nominal HA KEL (kN) per lane	Factored HA KEL (kN) per lane
First Lane	1.0	28.377	28.377	120	120

Copyright 1986-2024 Fitzroy Systems Ltd.

Load Reduction K-factors:
The Load Reduction K-factors for HA UDL and KEL in table below
are in accordance with CS 454 Clause 5.19(2).
Traffic flow category: High (H)
Road surface category: Good (g)

Assessment Live Loadings	Reduction Factors for Type HA UDL and KEL Loaded length 40 m
40 tonnes	0.81
26 tonnes	0.78
18 tonnes	0.61
7.5 tonnes	0.311
3.0 tonnes	0.311
Group 1 Fire Engine	0.5
Group 2 Fire Engine	0.311

Fig 5.19d K-factors for Heavy Traffic Good Surface (Hg)

Copyright 1986-2024 Fitzroy Systems Ltd.

Location: Dual carriageway

Type HA uniformly distributed loading (UDL)

and knife edge loading (KEL); Load Reduction K-factors

Highway carriageway and lanes

Number of carriageways on superstructure noc=2
Width of carriageway cw(1)=15 m
Width of carriageway cw(2)=15 m
Number of notional traffic lanes nl(2)=5

Loading for carriageways

Loaded length for HA UDL ll=35 m

Factored HA Load = (Nominal HA Load) x (Lane Factor)

	Lane Factor	Nominal HA UDL (kN/m) per lane	Factored HA UDL (kN/m) per lane	Nominal HA KEL (kN) per lane	Factored HA KEL (kN) per lane
First Lane	1.0	27.832	27.832	107.62	107.62
Second Lane	1.0	27.832	27.832	107.62	107.62
Third Lane	0.5	27.832	13.916	107.62	53.812
Fourth and subsequent lanes	0.4	27.832	11.133	107.62	43.049

Copyright 1986-2024 Fitzroy Systems Ltd.

Load Reduction K-factors:
The Load Reduction K-factors for HA UDL and KEL in table below are in accordance with CS 454 Clause 5.19(2).
Traffic flow category: High (H)
Road surface category: Poor (p)

Assessment Live Loadings	Reduction Factors for Type HA UDL and KEL Loaded length 35 m
40 tonnes	0.91
26 tonnes	0.79
18 tonnes	0.63
7.5 tonnes	0.291
3.0 tonnes	0.291
Group 1 Fire Engine	0.5
Group 2 Fire Engine	0.291

Fig 5.19a K-factors for Heavy Traffic Poor Surface (Hp)

Copyright 1986-2024 Fitzroy Systems Ltd.

Location: Dual carriageway

Type HA uniformly distributed loading (UDL)

and knife edge loading (KEL); Load Reduction K-factors

Highway carriageway and lanes

Number of carriageways on superstructure noc=2
Width of carriageway cw(1)=4.5 m
Width of carriageway cw(2)=4.5 m
Number of notional traffic lanes nl(2)=1

Loading for carriageways

Loaded length for HA UDL ll=10 m

Factored HA Load = (Nominal HA Load) x (Lane Factor)

	Lane Factor	Nominal HA UDL (kN/m) per lane	Factored HA UDL (kN/m) per lane	Nominal HA KEL (kN) per lane	Factored HA KEL (kN) per lane
First Lane	1.0	49.173	49.173	82	82
Second Lane	1.0	49.173	49.173	82	82

Copyright 1986-2024 Fitzroy Systems Ltd.

Load Reduction K-factors:
The Load Reduction K-factors for HA UDL and KEL in table below are in accordance with CS 454 Clause 5.19(2).
Traffic flow category: Medium (M)
Road surface category: Good (g)

Assessment Live Loadings	Reduction Factors for Type HA UDL and KEL Loaded length 10 m
40 tonnes	0.79
26 tonnes	0.74
18 tonnes	0.61
7.5 tonnes	0.37
3.0 tonnes	0.2
Group 1 Fire Engine	0.468
Group 2 Fire Engine	0.25

Fig 5.19e K-factors for Medium Traffic Good Surface (Mg)

Copyright 1986-2024 Fitzroy Systems Ltd.

Location: Dual carriageway

Type HA uniformly distributed loading (UDL)

and knife edge loading (KEL); Load Reduction K-factors

Highway carriageway and lanes

Number of carriageways on superstructure noc=2
Width of carriageway cw(1)=11 m
Number of notional traffic lanes nl(1)=4
Width of carriageway cw(2)=15 m
Number of notional traffic lanes nl(2)=5

Loading for carriageways

Loaded length for HA UDL ll=14 m

Factored HA Load = (Nominal HA Load) x (Lane Factor)

	Lane Factor	Nominal HA UDL (kN/m) per lane	Factored HA UDL (kN/m) per lane	Nominal HA KEL (kN) per lane	Factored HA KEL (kN) per lane
First Lane	1.0	39.248	39.248	82	82
Second Lane	1.0	39.248	39.248	82	82
Third Lane	0.5	39.248	19.624	82	41
Fourth and subsequent lanes	0.4	39.248	15.699	82	32.8

Copyright 1986-2024 Fitzroy Systems Ltd.

Load Reduction K-factors:
The Load Reduction K-factors for HA UDL and KEL in table below are in accordance with CS 454 Clause 5.19(2).
Traffic flow category: Medium (M)
Road surface category: Poor (p)

Assessment Live Loadings	Reduction Factors for Type HA UDL and KEL Loaded length 14 m
40 tonnes	0.892
26 tonnes	0.84
18 tonnes	0.63333
7.5 tonnes	0.36667
3.0 tonnes	0.208
Group 1 Fire Engine	0.462
Group 2 Fire Engine	0.25

Fig 5.19b K-factors for Medium Traffic Poor Surface (Mp)

Copyright 1986-2024 Fitzroy Systems Ltd.

Location: Dual carriageway

Type HA uniformly distributed loading (UDL)

and knife edge loading (KEL); Load Reduction K-factors

Highway carriageway and lanes

Number of carriageways on superstructure noc=2
Width of carriageway cw(1)=4.5 m
Width of carriageway cw(2)=3.5 m

Loading for carriageways

Loaded length for HA UDL ll=39 m

Factored HA Load = (Nominal HA Load) x (Lane Factor)

	Lane Factor	Nominal HA UDL (kN/m) per lane	Factored HA UDL (kN/m) per lane	Nominal HA KEL (kN) per lane	Factored HA KEL (kN) per lane
First Lane	1.0	28.213	28.213	117.3	117.3
Second Lane	1.0	28.213	28.213	117.3	117.3

Copyright 1986-2024 Fitzroy Systems Ltd.

Load Reduction K-factors:
The Load Reduction K-factors for HA UDL and KEL in table below
are in accordance with CS 454 Clause 5.19(2).
Traffic flow category: Low (L)
Road surface category: Good (g)

Assessment Live Loadings	Reduction Factors for Type HA UDL and KEL Loaded length 39 m
40 tonnes	0.76
26 tonnes	0.69
18 tonnes	0.54
7.5 tonnes	0.307
3.0 tonnes	0.307
Group 1 Fire Engine	0.5
Group 2 Fire Engine	0.307

Fig 5.19f K-factors for Low Traffic Good Surface (Lg)

Copyright 1986-2024 Fitzroy Systems Ltd.

Location: Dual carriageway

Type HA uniformly distributed loading (UDL)

and knife edge loading (KEL); Load Reduction K-factors

Highway carriageway and lanes

Number of carriageways on superstructure noc=2
Width of carriageway cw(1)=7.8 m
Width of carriageway cw(2)=4 m

Loading for carriageways

Loaded length for HA UDL ll=30 m

Factored HA Load = (Nominal HA Load) x (Lane Factor)

	Lane Factor	Nominal HA UDL (kN/m) per lane	Factored HA UDL (kN/m) per lane	Nominal HA KEL (kN) per lane	Factored HA KEL (kN) per lane
First Lane	1.0	27.975	27.975	97.561	97.561
Second Lane	1.0	27.975	27.975	97.561	97.561
Third Lane	0.5	27.975	13.987	97.561	48.78
Fourth Lane	0.4	27.975	11.19	97.561	39.024

Copyright 1986-2024 Fitzroy Systems Ltd.

Load Reduction K-factors:
The Load Reduction K-factors for HA UDL and KEL in table below
are in accordance with CS 454 Clause 5.19(2).
Traffic flow category: Low (L)
Road surface category: Poor (p)

Assessment Live Loadings	Reduction Factors for Type HA UDL and KEL Loaded length 30 m
40 tonnes	0.86
26 tonnes	0.72
18 tonnes	0.56
7.5 tonnes	0.271
3.0 tonnes	0.271
Group 1 Fire Engine	0.5
Group 2 Fire Engine	0.271

Fig 5.19c K-factors for Low Traffic Poor Surface (Lp)

Copyright 1986-2024 Fitzroy Systems Ltd.

Location: Dual carriageway

Type HA uniformly distributed loading (UDL)

and knife edge loading (KEL); Load Reduction K-factors

Highway carriageway and lanes

Number of carriageways on superstructure noc=2
Width of carriageway cw(1)=4.5 m
Width of carriageway cw(2)=8.5 m
Number of notional traffic lanes nl(2)=3

Loading for carriageways

Loaded length for HA UDL ll=7.5 m

Factored HA Load = (Nominal HA Load) x (Lane Factor)

	Lane Factor	Nominal HA UDL (kN/m) per lane	Factored HA UDL (kN/m) per lane	Nominal HA KEL (kN) per lane	Factored HA KEL (kN) per lane
First Lane	1.0	59.626	59.626	82	82
Second Lane	1.0	59.626	59.626	82	82
Third Lane	0.5	59.626	29.813	82	41
Fourth Lane	0.4	59.626	23.85	82	32.8

Copyright 1986-2024 Fitzroy Systems Ltd.

Load Reduction K-factors:
The Load Reduction K-factors for HA UDL and KEL in table below are in accordance with CS 454 Clause 5.19(2).
Traffic flow category: High (H)
Road surface category: Poor (p)

Assessment Live Loadings	Reduction Factors for Type HA UDL and KEL Loaded length 7.5 m
40 tonnes	0.91
26 tonnes	0.89
18 tonnes	0.73
7.5 tonnes	0.39
3.0 tonnes	0.2
Group 1 Fire Engine	0.49
Group 2 Fire Engine	0.25

Fig 5.19a K-factors for Heavy Traffic Poor Surface (Hp)

Copyright 1986-2024 Fitzroy Systems Ltd.

Location: Single carriageway

Type HA uniformly distributed loading (UDL)

and knife edge loading (KEL); Load Reduction K-factors

Highway carriageway and lanes

Number of carriageways on superstructure noc=1
Width of carriageway cw(1)=15 m
Number of notional traffic lanes nl(1)=5

Loading for carriageway

Loaded length for HA UDL ll=50 m

Factored HA Load = (Nominal HA Load) x (Lane Factor)

	Lane Factor	Nominal HA UDL (kN/m) per lane	Factored HA UDL (kN/m) per lane	Nominal HA KEL (kN) per lane	Factored HA KEL (kN) per lane
First Lane	1.0	24.436	24.436	120	120
Second Lane	1.0	24.436	24.436	120	120
Third Lane	0.5	24.436	12.218	120	60
Fourth and subsequent lanes	0.4	24.436	9.7744	120	48

Copyright 1986-2024 Fitzroy Systems Ltd.

Load Reduction K-factors:
The Load Reduction K-factors for HA UDL and KEL in table below are in accordance with CS 454 Clause 5.19(2).
Traffic flow category: Medium (M)
Road surface category: Good (g)

Assessment Live Loadings	Reduction Factors for Type HA UDL and KEL Loaded length 50 m
40 tonnes	0.78
26 tonnes	0.73
18 tonnes	0.58
7.5 tonnes	0.35
3.0 tonnes	0.35
Group 1 Fire Engine	0.5
Group 2 Fire Engine	0.35

Fig 5.19e K-factors for Medium Traffic Good Surface (Mg)

Location: Ex1 - Internal beam

Ultimate limit state : flexure of prestressed concrete section

Calculations are in accordance with BS5400:Part 4:1990 as implemented by DOT Departmental Standard BD 44/15.

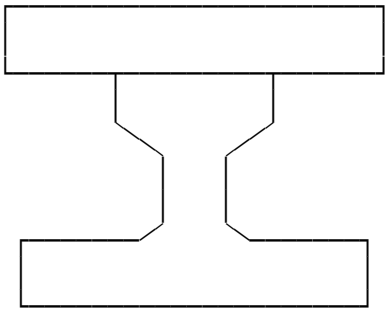

Deck on Beams

Char. strength of concrete fcum=40 N/mm²
Number of cross-sections ncs=3
Cross-section 1
Top of cross-section is the compression face.
Breadth at top xbt(1)=1000 mm
Breadth at bottom xbb(1)=1000 mm
Depth xd(1)=300 mm
Cross-section 2
Breadth at top xbt(2)=400 mm
Breadth at bottom xbb(2)=400 mm
Depth xd(2)=550 mm
Cross-section 3
Bottom of cross-section is the tension face.
Breadth at top xbt(3)=1200 mm
Breadth at bottom xbb(3)=1200 mm
Depth xd(3)=350 mm
Number of layers of prestressing tendons and additional reinforcement nols=2
Layer 1
Area of tendon or reinforcement As(1)=2412 mm²
Depth from compression face ds(1)=1050 mm
Characteristic strength fy(1)=1860 N/mm²
Stress after all losses fal(1)=975 N/mm²
Young's modulus for reinforcement E(1)=200000 N/mm²

Layer 2

Area of tendon or reinforcement	As(2)=4825 mm²
Depth from compression face	ds(2)=1130 mm
Characteristic strength	fy(2)=460 N/mm²
Stress after all losses	fal(2)=0 N/mm²
Young's modulus for reinforcement	E(2)=200000 N/mm²
Total moment from steel forces	3886.5 kNm
Moment from concrete forces	1252.1 kNm
Moment of resistance of section	M=MR+MC=5138.6 kNm
Depth to Neutral Axis	381.78 mm

Ductility requirements

Strain in outermost layer of tendons 0.011001 is less than the limiting strain 0.013087 from Clause 6.3.3.1.
The calculated ultimate moment 5138.6 kNm should be at least 1.15 times the required value (Clause 6.3.3.1).

DESIGN SUMMARY

Char.compr.strength of concrete	**40 N/mm²**
Tendon material factor	**1.15**
Section moment resistance	**5138.6 kNm**
Depth to Neutral Axis	**381.78 mm**

The calculated ultimate moment 5138.6 kNm should be at least 1.15 times the required value (Clause 6.3.3.1).

Copyright 1986-2024 Fitzroy Systems Ltd.

Location: Internal beam

Ultimate limit state : flexure of prestressed concrete section

Calculations are in accordance with BS5400:Part 4:1990 as implemented by DOT Departmental Standard BD 44/15.

Breadth of section	b=1000 mm
Effective depth to tension r'ment	d=1100 mm
Char. strength of tendons	fpu=1860 N/mm²
Area of tendons in tension zone	Aps=3000 mm²
Char. strength of concrete	fcu=40 N/mm²
Depth to neutral axis	x=to2*d=303.01 mm
Moment of resistance of section	Mu=fpb*Aps*(d-0.5*x)/1E6=4604.6 kNm

DESIGN SUMMARY

Char.strength of tendons	**1860 N/mm²**
Char.compr.strength of concrete	**40 N/mm²**
Tendon material factor	**1.15**
Section moment resistance	**4604.6 kNm**
Depth to Neutral Axis	**303.01 mm**

Copyright 1986-2024 Fitzroy Systems Ltd.

Location: Internal beam

Ultimate limit state : flexure of prestressed concrete section

Calculations are in accordance with BS5400:Part 4:1990 as implemented by DOT Departmental Standard BD 44/15.

Breadth of section	b=1000 mm
Effective depth to tension r'ment	d=500 mm
Char. strength of tendons	fpu=1820 N/mm²
Area of tendons in tension zone	Aps=2310 mm²
Char. strength of concrete	fcu=40 N/mm²
Depth to neutral axis	x=to2*d=213.74 mm

Moment of resistance of section Mu=fpb*Aps*(d-0.5*x)/1E6=1351.4 kNm
The depth to Neutral Axis 213.74 mm is too low to provide the elongation given in Clause 6.3.3.1.
The ultimate moment calculated 1351.4 kNm should be at least 1.15 times the required value. Table 27.

DESIGN SUMMARY

Char.strength of tendons	**1820 N/mm²**
Char.compr.strength of concrete	**40 N/mm²**
Tendon material factor	**1.15**
Section moment resistance	**1351.4 kNm**
Depth to Neutral Axis	**213.74 mm**

The ultimate moment calculated 1351.4 kNm should be at least 1.15 times the required value. Table 27.

Location: Beam A

Ultimate limit state : flexure of prestressed concrete section

Calculations are in accordance with BS5400:Part 4:1990 as implemented by DOT Departmental Standard BD 44/15.

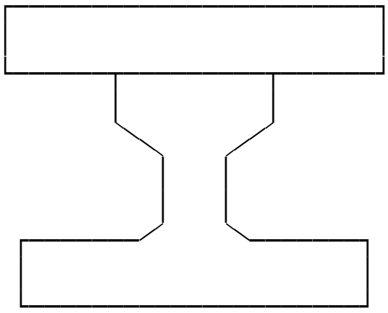

Deck on Beams

Number of cross-sections ncs=4
Cross-section 1
Top of cross-section is the compression face.
Breadth at top xbt(1)=1200 mm
Breadth at bottom xbb(1)=1000 mm
Depth xd(1)=250 mm
Char. strength of concrete fcu(1)=40 N/mm²
Cross-section 2
Breadth at top xbt(2)=600 mm
Breadth at bottom xbb(2)=450 mm
Depth xd(2)=150 mm
Char. strength of concrete fcu(2)=30 N/mm²
Cross-section 3
Breadth at top xbt(3)=300 mm
Breadth at bottom xbb(3)=300 mm
Depth xd(3)=600 mm
Char. strength of concrete fcu(3)=50 N/mm²
Cross-section 4
Bottom of cross-section is the tension face.
Breadth at top xbt(4)=750 mm
Breadth at bottom xbb(4)=1000 mm
Depth xd(4)=300 mm
Char. strength of concrete fcu(4)=45 N/mm²
Number of layers of prestressing tendons and additional reinforcement nols=5
Layer 1
Area of tendon or reinforcement As(1)=3272 mm²
Depth from compression face ds(1)=100 mm
Characteristic strength fy(1)=460 N/mm²
Stress after all losses fal(1)=0 N/mm²
Young's modulus for reinforcement E(1)=200000 N/mm²

Layer 2
Area of tendon or reinforcement As(2)=1620 mm²
Depth from compression face ds(2)=400 mm
Characteristic strength fy(2)=1820 N/mm²
Stress after all losses fal(2)=1000 N/mm²
Young's modulus for reinforcement E(2)=200000 N/mm²
Layer 3
Area of tendon or reinforcement As(3)=1200 mm²
Depth from compression face ds(3)=800 mm
Characteristic strength fy(3)=1860 N/mm²
Stress after all losses fal(3)=950 N/mm²
Young's modulus for reinforcement E(3)=200000 N/mm²
Layer 4
Area of tendon or reinforcement As(4)=1800 mm²
Depth from compression face ds(4)=1150 mm
Characteristic strength fy(4)=1770 N/mm²
Stress after all losses fal(4)=1025 N/mm²
Young's modulus for reinforcement E(4)=200000 N/mm²
Layer 5
Area of tendon or reinforcement As(5)=2513 mm²
Depth from compression face ds(5)=1250 mm
Characteristic strength fy(5)=460 N/mm²
Stress after all losses fal(5)=0 N/mm²
Young's modulus for reinforcement E(5)=200000 N/mm²
Total moment from steel forces 3738.9 kNm
Moment from concrete forces 1536.5 kNm
Moment of resistance of section M=MR+MC=5275.4 kNm
Depth to Neutral Axis 415.45 mm

Ductility requirements

Strain in outermost layer of tendons 0.011313 is less than the limiting strain 0.012696 from Clause 6.3.3.1.
The calculated ultimate moment 5275.4 kNm should be at least 1.15 times the required value (Clause 6.3.3.1).

DESIGN SUMMARY

Tendon material factor 1.15
Section moment resistance 5275.4 kNm
Depth to Neutral Axis 415.45 mm
The calculated ultimate moment 5275.4 kNm should be at least 1.15 times the required value (Clause 6.3.3.1).

Copyright 1986-2024 Fitzroy Systems Ltd.

Location: Ex1 - M beam Example 6.1.5 Horizontal Top Branch

Ultimate limit state : flexure of prestressed concrete section

Calculations are in accordance with BS EN 1991-1-1, BS EN 1992-2 and NA to BS EN 1991-1-1 & BS EN 1992-2.

```
Number of cross-sections          ncs=4
Cross-section 1
Concrete compressive strength     fck(1)=30 N/mm²
Material factor                   gamc=1.5
Cross-section 2
Concrete compressive strength     fck(2)=40 N/mm²
Cross-section 3
Concrete compressive strength     fck(3)=40 N/mm²
Cross-section 4
Concrete compressive strength     fck(4)=40 N/mm²
Number of layers (prestr.tendons) nolpt=4
Number of layers of reinforcement nols=0

Prestressing tendons:
Characteristic tensile strength   fpk=1670 N/mm²
Characteristic 0.1% proof stress  fpl=1468 N/mm²
Young's modulus of tendons        Ep=195000 N/mm²
Partial material factor (tendons) gamsp=1.15
Tendon stress-strain relationship:
Horizontal top branch with no strain limits
Layer 1
Area of tendon reinforcement      As(1)=278 mm²
Depth from compression face       ds(1)=600 mm
Stress after all losses           str(1)=901.8 N/mm²
Characteristic tensile strength   fpk(1)=fpk=1670 N/mm²
Characteristic 0.1% proof stress  fpl(1)=fpl=1468 N/mm²
Young's modulus for reinforcement E(1)=Ep=195000 N/mm²
Layer 2
Area of tendon reinforcement      As(2)=278 mm²
Depth from compression face       ds(2)=770 mm
Stress after all losses           str(2)=901.8 N/mm²
Characteristic tensile strength   fpk(2)=fpk=1670 N/mm²
Characteristic 0.1% proof stress  fpl(2)=fpl=1468 N/mm²
Young's modulus for reinforcement E(2)=Ep=195000 N/mm²
Layer 3
Area of tendon reinforcement      As(3)=278 mm²
Depth from compression face       ds(3)=820 mm
Stress after all losses           str(3)=901.8 N/mm²
Characteristic tensile strength   fpk(3)=fpk=1670 N/mm²
Characteristic 0.1% proof stress  fpl(3)=fpl=1468 N/mm²
Young's modulus for reinforcement E(3)=Ep=195000 N/mm²
Layer 4
Area of tendon reinforcement      As(4)=2085 mm²
Depth from compression face       ds(4)=870 mm
Stress after all losses           str(4)=901.8 N/mm²
Characteristic tensile strength   fpk(4)=fpk=1670 N/mm²
Characteristic 0.1% proof stress  fpl(4)=fpl=1468 N/mm²
```

Young's modulus for reinforcement E(4)=Ep=195000 N/mm²

Ultimate limit state : flexure of general prestressed concrete section

The calculation is based on BS EN 1992-1-1 Clause 6.1(2)P. Strain compatibility is ensured at the centroid of the tension reinforcement or, if the characteristic strength of the reinforcement is not constant, at the centroid of each layer. No limit is placed on either the depth of concrete in compression or the value of the lever arm.

Total moment from steel forces M1=1845.3 kNm

The concrete forces are obtained by integrating the product of the concrete area and concrete stress for each cross-section.

Moment from concrete forces	M2=859.09 kN
Section moment resistance	MyRd=M1+M2=2704.4 kNm
Depth to Neutral Axis	334.77 mm

DESIGN SUMMARY

Char.tensile strength of tendons	**1670 N/mm²**
Characteristic 0.1% proof stress	**1468 N/mm²**
Concrete material partial factor	**1.5**
Tendon partial material factor	**1.15**
Section moment resistance	**2704.4 kNm**
Depth to Neutral Axis	**334.77 mm**

Location: Ex2 - M beam Example 6.1.5 Inclined Top Branch

Ultimate limit state : flexure of prestressed concrete section

Calculations are in accordance with BS EN 1991-1-1, BS EN 1992-2 and NA to BS EN 1991-1-1 & BS EN 1992-2.

```
Number of cross-sections          ncs=4
Cross-section 1
Concrete compressive strength     fck(1)=30 N/mm²
Material factor                   gamc=1.5
Cross-section 2
Concrete compressive strength     fck(2)=40 N/mm²
Cross-section 3
Concrete compressive strength     fck(3)=40 N/mm²
Cross-section 4
Concrete compressive strength     fck(4)=40 N/mm²
Number of layers (prestr.tendons) nolpt=4
Number of layers of reinforcement nols=0

Prestressing tendons:
Characteristic tensile strength   fpk=1670 N/mm²
Characteristic 0.1% proof stress  fpl=1468 N/mm²
Young's modulus of tendons        Ep=195000 N/mm²
Partial material factor (tendons) gamsp=1.15
Tendon stress-strain relationship:
Inclined top branch with strain limits
Limiting strain                   eudp=0.02
Layer 1
Area of tendon reinforcement      As(1)=278 mm²
Depth from compression face       ds(1)=600 mm
Stress after all losses           str(1)=901.8 N/mm²
Characteristic tensile strength   fpk(1)=fpk=1670 N/mm²
Characteristic 0.1% proof stress  fpl(1)=fpl=1468 N/mm²
Young's modulus for reinforcement E(1)=Ep=195000 N/mm²
Layer 2
Area of tendon reinforcement      As(2)=278 mm²
Depth from compression face       ds(2)=770 mm
Stress after all losses           str(2)=901.8 N/mm²
Characteristic tensile strength   fpk(2)=fpk=1670 N/mm²
Characteristic 0.1% proof stress  fpl(2)=fpl=1468 N/mm²
Young's modulus for reinforcement E(2)=Ep=195000 N/mm²
Layer 3
Area of tendon reinforcement      As(3)=278 mm²
Depth from compression face       ds(3)=820 mm
Stress after all losses           str(3)=901.8 N/mm²
Characteristic tensile strength   fpk(3)=fpk=1670 N/mm²
Characteristic 0.1% proof stress  fpl(3)=fpl=1468 N/mm²
Young's modulus for reinforcement E(3)=Ep=195000 N/mm²
Layer 4
Area of tendon reinforcement      As(4)=2085 mm²
Depth from compression face       ds(4)=870 mm
Stress after all losses           str(4)=901.8 N/mm²
Characteristic tensile strength   fpk(4)=fpk=1670 N/mm²
```

Characteristic 0.1% proof stress fpl(4)=fpl=1468 N/mm²
Young's modulus for reinforcement E(4)=Ep=195000 N/mm²

Ultimate limit state : flexure of general prestressed concrete section

The calculation is based on BS EN 1992-1-1 Clause 6.1(2)P. Strain compatibility is ensured at the centroid of the tension reinforcement or, if the characteristic strength of the reinforcement is not constant, at the centroid of each layer. No limit is placed on either the depth of concrete in compression or the value of the lever arm.
Total moment from steel forces M1=1845.1 kNm
The concrete forces are obtained by integrating the product of the concrete area and concrete stress for each cross-section.
Moment from concrete forces M2=918.17 kN
Section moment resistance MyRd=M1+M2=2763.3 kNm
Depth to Neutral Axis 347.8 mm

DESIGN SUMMARY

Char.tensile strength of tendons	**1670 N/mm²**
Characteristic 0.1% proof stress	**1468 N/mm²**
Concrete material partial factor	**1.5**
Tendon partial material factor	**1.15**
Section moment resistance	**2763.3 kNm**
Depth to Neutral Axis	**347.8 mm**

Copyright 1986-2024 Fitzroy Systems Ltd.

Location: Ex3 - M beam Prestress and Reinf. Horizontal Top Branch

Ultimate limit state : flexure of prestressed concrete section

Calculations are in accordance with BS EN 1991-1-1, BS EN 1992-2 and NA to BS EN 1991-1-1 & BS EN 1992-2.

```
Number of cross-sections          ncs=4
Cross-section 1
Concrete compressive strength     fck(1)=30 N/mm²
Material factor                   gamc=1.5
Cross-section 2
Concrete compressive strength     fck(2)=40 N/mm²
Cross-section 3
Concrete compressive strength     fck(3)=40 N/mm²
Cross-section 4
Concrete compressive strength     fck(4)=40 N/mm²
Number of layers (prestr.tendons) nolpt=4
Number of layers of reinforcement nols=1

Prestressing tendons:
Characteristic tensile strength   fpk=1670 N/mm²
Characteristic 0.1% proof stress  fpl=1468 N/mm²
Young's modulus of tendons        Ep=195000 N/mm²
Partial material factor (tendons) gamsp=1.15
Tendon stress-strain relationship:
Horizontal top branch with no strain limits
Non prestressed reinforcement
Characteristic yield stress       fykr=500 N/mm²
Young's modulus of reinforcement  Es=200000 N/mm²
Material factor for reinforcement gamsr=1.15
Reinforcement stress-strain relationship
Horizontal top branch with no strain limits
Layer 1
Area of tendon reinforcement      As(1)=278 mm²
Depth from compression face       ds(1)=600 mm
Stress after all losses           str(1)=901.8 N/mm²
Characteristic tensile strength   fpk(1)=fpk=1670 N/mm²
Characteristic 0.1% proof stress  fpl(1)=fpl=1468 N/mm²
Young's modulus for reinforcement E(1)=Ep=195000 N/mm²
Layer 2
Area of tendon reinforcement      As(2)=278 mm²
Depth from compression face       ds(2)=770 mm
Stress after all losses           str(2)=901.8 N/mm²
Characteristic tensile strength   fpk(2)=fpk=1670 N/mm²
Characteristic 0.1% proof stress  fpl(2)=fpl=1468 N/mm²
Young's modulus for reinforcement E(2)=Ep=195000 N/mm²
Layer 3
Area of tendon reinforcement      As(3)=278 mm²
Depth from compression face       ds(3)=820 mm
Stress after all losses           str(3)=901.8 N/mm²
Characteristic tensile strength   fpk(3)=fpk=1670 N/mm²
Characteristic 0.1% proof stress  fpl(3)=fpl=1468 N/mm²
Young's modulus for reinforcement E(3)=Ep=195000 N/mm²
Layer 4
```

Area of tendon reinforcement	As(4)=2085 mm²
Depth from compression face	ds(4)=870 mm
Stress after all losses	str(4)=901.8 N/mm²
Characteristic tensile strength	fpk(4)=fpk=1670 N/mm²
Characteristic 0.1% proof stress	fpl(4)=fpl=1468 N/mm²
Young's modulus for reinforcement	E(4)=Ep=195000 N/mm²
Layer 5	
Area of bar reinforcement	As(5)=791 mm²
Depth from compression face	ds(5)=870 mm
Characteristic strength	fyk(5)=fykr=500 N/mm²
Young's modulus for reinforcement	E(5)=Es=200000 N/mm²
Material factor for re'ment	gms(5)=gamsr=1.15

Ultimate limit state : flexure of general prestressed concrete section

The calculation is based on BS EN 1992-1-1 Clause 6.1(2)P. Strain compatibility is ensured at the centroid of the tension reinforcement or, if the characteristic strength of the reinforcement is not constant, at the centroid of each layer. No limit is placed on either the depth of concrete in compression or the value of the lever arm.

Total moment from steel forces	M1=1838.8 kNm

The concrete forces are obtained by integrating the product of the concrete area and concrete stress for each cross-section.

Moment from concrete forces	M2=1078.9 kN
Section moment resistance	MyRd=M1+M2=2917.7 kNm
Depth to Neutral Axis	381.59 mm

DESIGN SUMMARY

Char.tensile strength of tendons	**1670 N/mm²**
Characteristic 0.1% proof stress	**1468 N/mm²**
Concrete material partial factor	**1.5**
Tendon partial material factor	**1.15**
Section moment resistance	**2917.7 kNm**
Depth to Neutral Axis	**381.59 mm**

Copyright 1986-2024 Fitzroy Systems Ltd.

Location: Ex4 - M beam Prestress and Reinf. Inclined Top Branch

Ultimate limit state : flexure of prestressed concrete section

Calculations are in accordance with BS EN 1991-1-1, BS EN 1992-2 and NA to BS EN 1991-1-1 & BS EN 1992-2.

```
Number of cross-sections          ncs=4
Cross-section 1
Concrete compressive strength     fck(1)=30 N/mm²
Material factor                   gamc=1.5
Cross-section 2
Concrete compressive strength     fck(2)=40 N/mm²
Cross-section 3
Concrete compressive strength     fck(3)=40 N/mm²
Cross-section 4
Concrete compressive strength     fck(4)=40 N/mm²
Number of layers (prestr.tendons) nolpt=4
Number of layers of reinforcement nols=1

Prestressing tendons:
Characteristic tensile strength   fpk=1670 N/mm²
Characteristic 0.1% proof stress  fpl=1468 N/mm²
Young's modulus of tendons        Ep=195000 N/mm²
Partial material factor (tendons) gamsp=1.15
Tendon stress-strain relationship:
Inclined top branch with strain limits
Limiting strain                   eudp=0.02
Non prestressed reinforcement
Characteristic yield stress       fykr=500 N/mm²
Young's modulus of reinforcement  Es=200000 N/mm²
Material factor for reinforcement gamsr=1.15
Reinforcement stress-strain relationship
Inclined top branch with strain limits
Ductility class is constant for whole section
Ductility Class (1=A, 2=B, 3=C)   dcr=2
Strain at maximum force           eukr=0.05
Multiplication factor             kr=1.08
Layer 1
Area of tendon reinforcement      As(1)=278 mm²
Depth from compression face       ds(1)=600 mm
Stress after all losses           str(1)=901.8 N/mm²
Characteristic tensile strength   fpk(1)=fpk=1670 N/mm²
Characteristic 0.1% proof stress  fpl(1)=fpl=1468 N/mm²
Young's modulus for reinforcement E(1)=Ep=195000 N/mm²
Layer 2
Area of tendon reinforcement      As(2)=278 mm²
Depth from compression face       ds(2)=770 mm
Stress after all losses           str(2)=901.8 N/mm²
Characteristic tensile strength   fpk(2)=fpk=1670 N/mm²
Characteristic 0.1% proof stress  fpl(2)=fpl=1468 N/mm²
Young's modulus for reinforcement E(2)=Ep=195000 N/mm²
Layer 3
Area of tendon reinforcement      As(3)=278 mm²
```

Depth from compression face	ds(3)=820 mm
Stress after all losses	str(3)=901.8 N/mm²
Characteristic tensile strength	fpk(3)=fpk=1670 N/mm²
Characteristic 0.1% proof stress	fpl(3)=fpl=1468 N/mm²
Young's modulus for reinforcement	E(3)=Ep=195000 N/mm²
Layer 4	
Area of tendon reinforcement	As(4)=2085 mm²
Depth from compression face	ds(4)=870 mm
Stress after all losses	str(4)=901.8 N/mm²
Characteristic tensile strength	fpk(4)=fpk=1670 N/mm²
Characteristic 0.1% proof stress	fpl(4)=fpl=1468 N/mm²
Young's modulus for reinforcement	E(4)=Ep=195000 N/mm²
Layer 5	
Area of bar reinforcement	As(5)=791 mm²
Depth from compression face	ds(5)=870 mm
Characteristic strength	fyk(5)=fykr=500 N/mm²
Young's modulus for reinforcement	E(5)=Es=200000 N/mm²
Material factor for re'ment	gms(5)=gamsr=1.15
Ductility Class for reinforcement	dc(5)=dcr=2
Strain at maximum force	euk(5)=eukr=0.05
Multiplication factor	k(5)=kr=1.08

Ultimate limit state : flexure of general prestressed concrete section

The calculation is based on BS EN 1992-1-1 Clause 6.1(2)P. Strain compatibility is ensured at the centroid of the tension reinforcement or, if the characteristic strength of the reinforcement is not constant, at the centroid of each layer. No limit is placed on either the depth of concrete in compression or the value of the lever arm.

Total moment from steel forces	M1=1833.8 kNm

The concrete forces are obtained by integrating the product of the concrete area and concrete stress for each cross-section.

Moment from concrete forces	M2=1122.7 kN
Section moment resistance	MyRd=M1+M2=2956.5 kNm
Depth to Neutral Axis	390.45 mm

DESIGN SUMMARY

Char.tensile strength of tendons	**1670 N/mm²**
Characteristic 0.1% proof stress	**1468 N/mm²**
Concrete material partial factor	**1.5**
Tendon partial material factor	**1.15**
Section moment resistance	**2956.5 kNm**
Depth to Neutral Axis	**390.45 mm**

Copyright 1986-2024 Fitzroy Systems Ltd.

Location: Ex1 - Internal beam

Ultimate limit state : flexure of prestressed concrete section

Ultimate moment calculation to Cl. 6.3.3.1 of BD 44/15 Appendix A

Concrete strength	fcum=40 mm²
Factor for concrete	gmcm=1.5
Factor for steel	gmsm=1.15
Number of cross-sections	ncs=3
Cross-section 1	
Top of cross-section is the compression face.	
Breadth at top	xbt(1)=1000 mm
Breadth at bottom	xbb(1)=1000 mm
Depth	xd(1)=300 mm
Cross-section 2	
Breadth at top	xbt(2)=400 mm
Breadth at bottom	xbb(2)=400 mm
Depth	xd(2)=550 mm
Cross-section 3	
Bottom of cross-section is the tension face.	
Breadth at top	xbt(3)=1200 mm
Breadth at bottom	xbb(3)=1200 mm
Depth	xd(3)=350 mm
No. of layers of prestressing tendons and additional r'ment	nols=2
Layer 1 :	
Area of tendon or reinforcement	As(1)=2412 mm²
Depth from compression face	ds(1)=1050 mm
Strength of steel	fy(1)=1860 N/mm²
Stress after all losses	fal(1)=975 N/mm²
Young's modulus for reinforcement	E(1)=200000 N/mm²
Layer 2 :	
Area of tendon or reinforcement	As(2)=4825 mm²
Depth from compression face	ds(2)=1130 mm
Strength of steel	fy(2)=460 N/mm²
Stress after all losses	fal(2)=0 N/mm²
Young's modulus for reinforcement	E(2)=200000 N/mm²

Copyright 1986-2024 Fitzroy Systems Ltd.

Section Moment Resistance 5138.6 kNm

Depth to Neutral Axis 381.78 mm

Strain in outermost layer of tendons 0.011001 is less than
the limiting strain of 0.013087 (BS 5400-4 Clause 6.3.3.1).
Hence failure may be brittle.

Copyright 1986-2024 Fitzroy Systems Ltd.

Location: Ex2 - Inner beam

Ultimate limit state : flexure of prestressed concrete section

Ultimate moment calculation (Cl. 6.3.3.3 of BD 44/15 Appendix A)

Breadth of section	b=1000 mm
Effective depth to tendons	d=1100 mm
Tendon strength	fpu=1860 N/mm²
Young's modulus for tendon	Es=200000 N/mm²
Area of tendons in tension zone	Aps=3000 mm²
Concrete strength	fcu=40 mm²
Factor for tendons	gms=1.15
Factor for concrete	gmc=1.5

Depth to neutral axis x=(fpb*Aps*gmc)/(0.6*fcu*b)=303.26 mm

Moment of resistance of section Mu=fpb*Aps*(d-0.5*x)/1E6=4601.7 kNm

Stress in tendons at failure is greater than fpu/gms. Hence failure should be ductile.

Copyright 1986-2024 Fitzroy Systems Ltd.

Location: Ex3 - Internal beam

Ultimate limit state : flexure of prestressed concrete section

Ultimate moment calculation (Cl. 6.3.3.3 of BD 44/15 Appendix A)

Breadth of section	b=1000 mm
Effective depth to tendons	d=500 mm
Tendon strength	fpu=1820 N/mm²
Young's modulus for tendon	Es=200000 N/mm²
Area of tendons in tension zone	Aps=2310 mm²
Concrete strength	fcu=40 mm²
Factor for tendons	gms=1.15
Factor for concrete	gmc=1.5
Depth to neutral axis	x=(fpb*Aps*gmc)/(0.6*fcu*b)=214.73 mm
Moment of resistance of section	Mu=fpb*Aps*(d-0.5*x)/1E6=1349 kNm

Stress in tendons at failure is less than fpu/gms. Hence failure nay be brittle.

Copyright 1986-2024 Fitzroy Systems Ltd.

Location: Ex4 - Beam A

Ultimate limit state : flexure of prestressed concrete section

Ultimate moment calculation to Cl. 6.3.3.1 of BD 44/15 Appendix A

```
Number of cross-sections          ncs=4
Cross-section 1
Top of cross-section is the compression face.
Breadth at top                    xbt(1)=1200 mm
Breadth at bottom                 xbb(1)=1000 mm
Depth                             xd(1)=250 mm
Strength of concrete              fcu(1)=40 N/mm²
Factor for concrete               gmc(1)=1.2
Cross-section 2
Breadth at top                    xbt(2)=600 mm
Breadth at bottom                 xbb(2)=450 mm
Depth                             xd(2)=150 mm
Strength of concrete              fcu(2)=30 N/mm²
Factor for concrete               gmc(2)=1.5
Cross-section 3
Breadth at top                    xbt(3)=300 mm
Breadth at bottom                 xbb(3)=300 mm
Depth                             xd(3)=600 mm
Strength of concrete              fcu(3)=50 N/mm²
Factor for concrete               gmc(3)=1.5
Cross-section 4
Bottom of cross-section is the tension face.
Breadth at top                    xbt(4)=750 mm
Breadth at bottom                 xbb(4)=1000 mm
Depth                             xd(4)=300 mm
Strength of concrete              fcu(4)=45 N/mm²
Factor for concrete               gmc(4)=1.2
No. of layers of prestressing
tendons and additional r'ment     nols=5
Layer 1 :
Area of tendon or reinforcement   As(1)=3272 mm²
Depth from compression face       ds(1)=100 mm
Strength of steel                 fy(1)=460 N/mm²
Stress after all losses           fal(1)=0 N/mm²
Factor for steel                  gms(1)=1.15
Young's modulus for reinforcement E(1)=200000 N/mm²
```

Layer 2 :

Area of tendon or reinforcement	As(2)=1620 mm²
Depth from compression face	ds(2)=250 mm
Strength of steel	fy(2)=1820 N/mm²
Stress after all losses	fal(2)=1000 N/mm²
Factor for steel	gms(2)=1.1
Stress 'a'	tra(2)=1365 N/mm²
Strain 'a'	sa(2)=0.007
Stress 'b'	trb(2)=1820 N/mm²
Strain 'b'	sb(2)=0.0133

Layer 3 :

Area of tendon or reinforcement	As(3)=1200 mm²
Depth from compression face	ds(3)=800 mm
Strength of steel	fy(3)=1860 N/mm²
Stress after all losses	fal(3)=950 N/mm²
Factor for steel	gms(3)=1.15
Young's modulus for reinforcement	E(3)=200000 N/mm²

Layer 4 :

Area of tendon or reinforcement	As(4)=1800 mm²
Depth from compression face	ds(4)=1150 mm
Strength of steel	fy(4)=1770 N/mm²
Stress after all losses	fal(4)=1025 N/mm²
Factor for steel	gms(4)=1.15
Young's modulus for reinforcement	E(4)=175000 N/mm²

Layer 5 :

Area of tendon or reinforcement	As(5)=2513 mm²
Depth from compression face	ds(5)=1250 mm
Strength of steel	fy(5)=460 N/mm²
Stress after all losses	fal(5)=0 N/mm²
Factor for steel	gms(5)=1.15
Young's modulus for reinforcement	E(5)=200000 N/mm²
Section Moment Resistance	5445.6 kNm

Depth to Neutral Axis 288.22 mm

Strain in outermost layer of tendons 0.017147 is greater than the limiting strain of 0.013795 (BS 5400-4 Clause 6.3.3.1). Hence failure should be ductile.

Location: EX1 - Edge beam

Ultimate limit state - shear capacity of a prestressed concrete section

Calculations are for Class 1, 2 & 3 members in accordance with BS5400 Part 4:1990 as implemented by DOT Departmental Standard BD 44/15.

At any section the ultimate shear resistance of the concrete alone, Vc, should be considered for the section both uncracked (Clause 6.3.4.2) and cracked (Clause 6.3.4.3) in flexure and if necessary shear reinforcement should be provided (Clause 6.3.4.4).

Flanged member

Breadth of member b=250 mm
Overall depth of member h=1035 mm
Char strength of concrete fcu=50 N/mm²

Compressive stress at centroidal axis due to prestress (fcp).
The value of fcp should be derived from the prestressing force after all losses have occurred multiplied by the appropriate partial safety factor from Clause 4.2.3.
Stress due to prestress fcp=6.88 N/mm²

Shear capacity of uncracked sections (Vco)

Component of prestressing force Vvc=0 kN
Uncracked section capacity Vco=Vvc+0.67*b*h*SQR(ft^2+fcp*ft)
/1000=661.41 kN

Cracked section Class 1 / 2 members (Cl. 6.3.4.3(a))

Depth to centroid of section from extreme compression fibre:
dc=517.5 mm
Depth to extreme tensile fibre from centroid of concrete section:
y=h-dc=517.5 mm
Second moment of area I=63.969E9 mm⁴
Depth from extreme compression fibre to centroid of all tendons:
d=893 mm
Total area of tensioned and untensioned steel in tension zone:
As=5280 mm²
Depth from compression face to centroid of steel area in tension zone (d1). The steel area includes tensioned and untensioned steel.
d1=945.5 mm
fpt is the stress due to prestress at the extreme tensile fibre and should be derived from the prestressing force after all losses have occurred and multiplied by the appropriate partial safety factor from Clause 4.2.3.
Stress fpt fpt=16.53 N/mm²
Cracking moment of section Mcr=(0.37*SQR(fcu)+fpt)*I/(1E6*y)
=2366.7 kNm

Results from shear capacity calculations

Class 1 / 2 member
Uncracked Section Shear Capacity 661.41 kN
Cracked Section Shear Capacity 734.61 kN
The shear force Vc which can be carried by the concrete alone
is the lesser of 661.41 kN and 734.61 kN
Shear force Vc carried by concrete 661.41 kN

Shear reinforcement (Cl. 6.3.4.4)

Shear reinforcement design is for a flanged beam.

Shear force due to ultimate loads V=900 kN
Effective depth for shear calc. dt=971 mm
Diameter of link reinforcement bd1=12 mm
Characteristic strength of links fyv=250 N/mm²
Calculations are for a flanged beam.
Web thickness bw=250 mm
Shear force V=900 kN is not greater than 1.8*Vc=1190.5 kN
Spacing of links along the member should be less than the smallest
of 0.75*dt=728.25 mm and 4*bw=1000 mm (Clause 6.3.4.4).
Spacing of links along the member sv=125 mm
Lateral spacing of individual legs of the links at a cross-section
should not exceed 0.75*dt=728.25 mm (Clause 6.3.4.4).
Number of legs of links across the member at right angles to
the span sv2=2
Cross-sectional area of all legs of the links at a
member cross-section Asv=sv2*PI*bd1^2/4=226.19 mm²
Area of shear reinforcement required (Clause 6.3.4.4).
Shear force V=900 kN exceeds Vc=661.41 kN
Area required Asvr=((V-Vc)*1000+0.4*bw*dt)*sv/(0.87*fyv*dt)=198.69 mm²
Link reinforcement adequate Area required 198.69 mm²
Area provided 226.19 mm²

Reinforcement summary

Flanged beam section.
Link reinforcement adequate Area required 198.69 mm²
Area provided 226.19 mm²
Area of effectively anchored longitudinal tensile r'ment and
prestressing tendons (excluding debonded tendons) additional
to that required at the ultimate limit state for other purposes.
Minimum area required =1124.4 mm²

Location: Ex2 - Beam A

Ultimate limit state - shear capacity of a prestressed concrete section

Calculations are for Class 1, 2 & 3 members in accordance with BS5400 Part 4:1990 as implemented by DOT Departmental Standard BD 44/15.

At any section the ultimate shear resistance of the concrete alone, Vc, should be considered for the section both uncracked (Clause 6.3.4.2) and cracked (Clause 6.3.4.3) in flexure and if necessary shear reinforcement should be provided (Clause 6.3.4.4).

Rectangular member

Breadth of member b=250 mm
Overall depth of member h=1035 mm
Char strength of concrete fcu=50 N/mm²

Compressive stress at centroidal axis due to prestress (fcp).
Stress due to prestress fcp=6.88 N/mm²

Shear capacity of uncracked sections (Vco)

Component of prestressing force Vvc=44 kN
Uncracked section capacity Vco=Vvc+0.67*b*h*SQR(ft^2+fcp*ft)
/1000=705.41 kN

Cracked section Class 1 / 2 members (Cl. 6.3.4.3(a))

Depth to centroid of section from extreme compression fibre:
dc=517.5 mm
Depth to extreme tensile fibre from centroid of concrete section:
y=h-dc=517.5 mm
Second moment of area I=23.098E9 mm⁴
Depth from extreme compression fibre to centroid of all tendons:
d=900 mm
Total area of tensioned and untensioned steel in tension zone:
As=4500 mm²
Depth from compression face to centroid of steel area in tension zone (d1). The steel area includes tensioned and untensioned steel.
d1=940 mm
fpt is the stress due to prestress at the extreme tensile fibre and should be derived from the prestressing force after all losses have occurred and multiplied by the appropriate partial safety factor from Clause 4.2.3.
Stress fpt fpt=15.2 N/mm²
Cracking moment of section Mcr=(0.37*SQR(fcu)+fpt)*I/(1E6*y)
=795.21 kNm

Cracked section Class 3 members (Cl. 6.3.4.3(b))

Depth to centroid of section from extreme compression fibre:
dc=517.5 mm
Second moment of area I=23.098E9 mm⁴
Depth from compression face to centroid of tensioned and untensioned steel area in tension zone d1=940 mm
Depth to centroid of tensioned and untensioned steel area in tension zone from centroid of concrete section:
ys=d1-dc=422.5 mm
fpts is the stress due to prestress at the depth 940 mm distance 422.5 mm from the centroid of the concrete section and should be derived from the prestressing force after all losses have occurred and multiplied by the appropriate partial safety factor from Clause 4.2.3.
Stress fpts fpts=13.67 N/mm²
Total area of tensioned and untensioned steel in tension zone:
As=4500 mm²
Effective force Pf=1780 kN
Area of tensioned steel Ast=2000 mm²
Area of untensioned steel Asu=2500 mm²
Char strength of tensioned steel fput=1800 N/mm²
Char strength (untensioned steel) fyLu=460 N/mm²

Results from shear capacity calculations

Results for a Class 1 / 2 member and a Class 3 member
Uncracked section shear capacity 705.41 kN
Cracked section shear capacity Class 1 / 2 337.19 kN
Cracked section shear capacity Class 3 432.71 kN
The shear force Vc which can be carried by the concrete alone is the least of 705.41 kN and 337.19 kN and 432.71 kN
Shear force Vc carried by concrete 337.19 kN

Shear reinforcement (Cl. 6.3.4.4)

Shear reinforcement design is for a slab.

Shear force due to ultimate loads V=700 kN
Calculations are for a slab.
Effective depth for shear calc. dt=940 mm
Diameter of link reinforcement bd1=12 mm
Characteristic strength of links fyv=460 N/mm²
Section width bw=250 mm
Shear force V=700 kN exceeds 1.8*Vc=606.94 kN
Spacing of links along the member should be less than 0.50*dt=470 mm (Clause 6.3.4.4).
Spacing of links along the member sv=125 mm
Lateral spacing of individual legs of the links at a cross-section should not exceed 0.75*dt=705 mm (Clause 6.3.4.4).
Number of legs of links across the member at right angles to the span sv2=2
Cross-sectional area of all legs of the links at a member cross-section Asv=sv2*PI*bd1^2/4=226.19 mm²
Area of shear reinforcement required (Clause 6.3.4.4).
Shear force V=700 kN exceeds Vc=337.19 kN

Area required Asvr=((V-Vc)*1000+0.4*bw*dt)*sv/(0.87*fyv*dt)=151.79 mm²
Link reinforcement adequate Area required 151.79 mm²
Area provided 226.19 mm²

Reinforcement summary

Slab section.
Link reinforcement adequate Area required 151.79 mm²
Area provided 226.19 mm²
Area of effectively anchored longitudinal tensile r'ment and prestressing tendons (excluding debonded tendons) additional to that required at the ultimate limit state for other purposes.
Minimum area required =874.56 mm²

Location: Ex3 - Beam B

Ultimate limit state - shear capacity of a prestressed concrete section

Calculations are for Class 1, 2 & 3 members in accordance with BS5400 Part 4:1990 as implemented by DOT Departmental Standard BD 44/15.

Transmission length lt=1300 mm
At any section the ultimate shear resistance of the concrete alone, Vc, should be considered for the section both uncracked (Clause 6.3.4.2) and cracked (Clause 6.3.4.3) in flexure and if necessary shear reinforcement should be provided (Clause 6.3.4.4).

Flanged member

Breadth of member b=300 mm
Overall depth of member h=950 mm
Char strength of concrete fcu=40 N/mm²

Compressive stress at centroidal axis due to prestress (fcp).
The value of fcp should be derived from the prestressing force after all losses have occurred multiplied by the appropriate partial safety factor from Clause 4.2.3.
Stress due to prestress fcp=8.6 N/mm²

Cracked section Class 1 / 2 members (Cl. 6.3.4.3(a))

Depth to centroid of section from extreme compression fibre:
dc=400 mm
Depth to extreme tensile fibre from centroid of concrete section:
y=h-dc=550 mm
Second moment of area I=35.6E9 mm⁴
Depth from extreme compression fibre to centroid of all tendons:
d=850 mm
Total area of tensioned and untensioned steel in tension zone:
As=3600 mm²
Depth from compression face to centroid of steel area in tension zone (d1). The steel area includes tensioned and untensioned steel.
d1=900 mm
fpt is the stress due to prestress at the extreme tensile fibre and should be derived from the prestressing force after all losses have occurred and multiplied by the appropriate partial safety factor from Clause 4.2.3.
Stress fpt at end of transmission length:
fpt=14 N/mm²

Cracked section Class 3 members (Cl. 6.3.4.3(b))

Depth to centroid of section from extreme compression fibre:
dc=400 mm
Second moment of area I=35.6E9 mm⁴
Depth from compression face to centroid of tensioned and untensioned steel area in tension zone d1=900 mm
Depth to centroid of tensioned and untensioned steel area in tension zone from centroid of concrete section:
ys=d1-dc=500 mm
fpts is the stress due to prestress at the depth 900 mm distance 500 mm from the centroid of the concrete section and should be derived from the prestressing force after all losses have occurred and multiplied by the appropriate partial safety factor from Clause 4.2.3.
Stress fpts at end of transmission length:
fpts=13.1 N/mm²

Total area of tensioned and untensioned steel in tension zone:
As=3600 mm²
At end of transmission length
Effective prestressing force after all losses have occurred multiplied by the appropriate partial safety factor from Clause 4.2.3.
Effective force Pf=1500 kN
Area of tensioned steel Ast=2500 mm²
Area of untensioned steel Asu=1100 mm²
Char strength of tensioned steel fput=1720 N/mm²
Char strength (untensioned steel) fyLu=460 N/mm²

Distance from start of transmission length (zero stress end):
dlt(1)=500 mm

Component of prestressing force Vvc=0 kN
Total area of untensioned steel in tension zone
Steel area Aut=1100 mm²
Depth from compression face to centroid of untensioned steel
Depth dut=960 mm
Section width bw=300 mm
Distance of section from support av=400 mm
Shear capacity from reinforced concrete design Vrc=ehss*bw*dut/1000=629.43 kN

Results from shear capacity calculations

Results for a Class 1 / 2 member and a Class 3 member

Uncracked section shear capacity		516.79 kN
Cracked section shear capacity	Class 1 / 2	2309.7 kN
Cracked section shear capacity	Class 3	1796.2 kN
Prestressed concrete shear capacity		516.79 kN
Reinforced concrete shear capacity		629.43 kN

The shear force Vc which can be carried by the concrete alone is the greater of 516.79 kN and 629.43 kN
Shear force Vc carried by concrete 629.43 kN

Shear reinforcement (Cl. 6.3.4.4)

Shear reinforcement design is for a flanged beam.

Shear force due to ultimate loads V=1100 kN
Effective depth for shear calc. dt=900 mm
Diameter of link reinforcement bd1=12 mm
Characteristic strength of links fyv=460 N/mm²
Calculations are for a flanged beam.
Web thickness bw=300 mm
Shear force V=1100 kN is not greater than 1.8*Vc=1133 kN
Spacing of links along the member should be less than the smallest of 0.75*dt=675 mm and 4*bw=1200 mm (Clause 6.3.4.4).
Spacing of links along the member sv=125 mm
Lateral spacing of individual legs of the links at a cross-section should not exceed 0.75*dt=675 mm (Clause 6.3.4.4).
Number of legs of links across the member at right angles to the span sv2=2
Cross-sectional area of all legs of the links at a member cross-section Asv=sv2*PI*bd1^2/4=226.19 mm²
Area of shear reinforcement required (Clause 6.3.4.4).
Shear force V=1100 kN exceeds Vc=629.43 kN
Area required Asvr=((V-Vc)*1000+0.4*bw*dt)*sv/(0.87*fyv*dt)=200.79 mm²
Link reinforcement adequate Area required 200.79 mm²
Area provided 226.19 mm²

Reinforcement summary

Flanged beam section.
Link reinforcement adequate Area required 200.79 mm²
Area provided 226.19 mm²
Area of effectively anchored longitudinal tensile r'ment and prestressing tendons (excluding debonded tendons) additional to that required at the ultimate limit state for other purposes.
Minimum area required =1374.3 mm²

Location: EX1 - Edge beam (I Beam)

Design shear resistance of a prestressed concrete section

Calculations for the shear resistance at the Ultimate Limit State are in accordance with BS EN 1992-1-1:2004 and the publication entitled "Designers' Guide to EN 1992-2 EC2: Design of concrete structures Part 2: Concrete bridges, by C.R. Hendy and D.A. Smith.

Depth of NA from compression face dc=h/2=517.5 mm
Consider a level just underneath the top slab. First moment of area of excluded area above this level and about the centroidal axis of the section Suf=bf*tf*(dc-tf/2)/1E9=0.089906 m³

Shear resistance of sections uncracked in flexure (VRdc1)

The following shear resistance check is at the section centroid level.
Prestressing force below is after all losses have occurred.
Prestressing force after loses NEd=3947 kN
Section cross-sectional area A=0.57375 m²
Second moment of area I=0.063969 m⁴
The compressive stress (scp) due to axial loading or prestressing (after losses and including appropriate partial safety factors) at the level considered is as follows:
Compressive stress scp=NEd*1E3/(A*1E6)=6.8793 N/mm²
First moment of area of excluded area above and about the centroidal axis of the section S=0.093413 m³
Prestressing coefficient a1=0.9 (pre-tensioned)
compute comp=(fctd^2+a1*scp*fctd)^0.5
=3.5804 kN
Uncracked shear resistance VRdc1=I*bw/S*comp=612.96 kN

Shear resistance of sections uncracked in flexure (VRdc2)

In certain sections such as I-beams, where the section width varies over height the maximum principal stress may occur at a level other than at the centroidal axis. In such cases EN 1992-1-1, Clause 6.2.2(2) requires that the minimum value of shear resistance is determined by calculating VRdc at various levels in the cross-section. The following shear resistance check is at the underside of the top slab.
Depth below is to centroid of section from extreme compression fibre.
Depth to centroid of section dc=517.5 mm
Depth below is to extreme tensile fibre from centroid of section.
Depth to extreme tensile fibre zna=h-dc=517.5 mm
Top flange thickness tf=350 mm
Compressive stress scp=6.8793 N/mm²
Height of the centroid of prestressing force from extreme compression fibre of the section zpf=893 mm
Flexural stress sbend=NEd*comp/(I*1E9)=3.8808 N/mm²
Consider a level just underneath the top slab. First moment of area of excluded area above this level and about the centroidal axis of the section Suf=0.089906 m³
compute comp=(fctd^2+(a1*scp+sbend)
*fctd)^0.5=4.3788 kN

Uncracked shear resistance VRdc2=I*bw/Suf*comp=778.89 kN

Shear resistance of sections cracked in flexure (VRdc3)

The area of tensile reinforcement and bonded prestressing steel may be included in the calculation of Asl below (i.e. the total area of tensioned and untensioned steel in tension zone).
Area of tensioned steel Ast=5280 mm²
Area of untensioned steel Asu=0 mm²
Depth from compression face to centroid of steel area in tension zone. The steel area includes tensioned and untenioned steel.
Effective depth (tensile r'ment) d=945.5 mm
Limiting compressive stress scp'=5.3333 N/mm²
compute comp=(CRdc*ks*vRdc+0.15*scp')=1.5549
Shear resistance VRdc3=comp*bw*d/1000=367.53 kN
Minimum shear resistance VRdm=vmin*bw*d/1000=92.298 kN
Shear resistance VRdc3=367.53 kN

Results from shear resistance calculations

Uncracked section shear resistance 612.96 kN
Uncracked section shear resistance 778.89 kN
Cracked section shear resistance 367.53 kN
The shear force VRdc which can be carried by the concrete alone is the lesser of the above three values.
Shear resistance for concrete section (VRdc) 367.53 kN
Design shear force (VEd) 650 kN
As VEd > VRdc (650 kN > 367.53 kN), the design shear force exceeds the shear resistance. Shear reinforcement is required.

Shear reinforcement - in accordance with Clause 6.2.3(3)

Shear reinforcement design is for a flanged beam.
Stress coefficient to be adopted acw=1
Maximum shear resistance:

VRdmax=acw*0.18*bw*d*fck*(1-fck/250)*SIN(RAD(2*theta'))/1000
=993.08 kN

Design shear force VEd=650 kN
Effective depth for shear calc. dt=971 mm
Diameter of link reinforcement bd1=12 mm
Characteristic strength of links fyk=500 N/mm²
Design yield strength of links fyd=fyk/1.15=434.78 N/mm²
Calculations are for a flanged beam section.
Spacing of links along the member should be less than the smallest of 0.75*dt=728.25 mm and 300 mm.
Spacing of links along the member sv=125 mm
Lateral spacing of individual legs of the links at a cross-section should be less than the smallest of 600 mm or 0.75*dt=728.25 mm.
Number of legs of links across the member at right angles to the span sv2=2
Cross-sectional area of all legs of the links at a member cross-section Asv=sv2*PI*bd1^2/4=226.19 mm²

Area of shear reinforcement required:

Asvr=VEd*1E3*sv/(0.9*dt*fyd*1/TAN(RAD(theta')))
=86.397 mm²

Link reinforcement adequate Area required 86.397 mm²
Area provided 226.19 mm²

Additional longitudinal tensile force - Clause 6.2.3(7)

The additional longitudinal tensile force, Ftd, in the longitudinal reinforcement due to shear VEd is calculated using expression 6.18 and could be provided for by extending the curtailment point of the mid-span longitudinal reinforcement as necessary to achieve the required curtailment anchorage.
compute cot(θ) ctheta=1/TAN(RAD(theta'))=2.4751
Additional long.tensile force Ftd=0.5*VEd*ctheta=804.4 kN
NOTE: As an alternative to the above curtailment option, additional longitudinal reinforcement could be provided to resist the above longitudinal tensile force.

Reinforcement summary

Member under consideration is a flanged beam section.
Link reinforcement adequate Area required 86.397 mm²
Area provided 226.19 mm²
Use 2 No/12 mm diameter legs
of links across the member spaced
at 125 mm centres along the member

The additional longitudinal tensile force, Ftd=804.4 kN, in the longitudinal reinforcement due to shear VEd=650 kN is catered for by extending the curtailment point of the mid-span longitudinal reinforcement as necessary to achieve the required curtailment anchorage. Alternatively additional longitudinal reinforcement could be provided to resist this additional tensile force which is beyond the scope of this proforma.

Location: Ex2 - Beam A (Rectangular member)

Design shear resistance of a prestressed concrete section

Calculations for the shear resistance at the Ultimate Limit State are in accordance with BS EN 1992-1-1:2004 and the publication entitled "Designers' Guide to EN 1992-2 EC2: Design of concrete structures Part 2: Concrete bridges, by C.R. Hendy and D.A. Smith.

First moment of area of excluded area above and about the centroidal axis of the section S=b*h^2/(8*1E9)=0.033476 m³
Principal tensile stress at centroidal axis.

Shear resistance of sections uncracked in flexure (VRdc1)

The following shear resistance check is at the section centroid level.
Prestressing force below is after all losses have occurred.
Prestressing force after loses NEd=1780 kN
The compressive stress (scp) due to axial loading or prestressing (after losses and including appropriate partial safety factors) at the level considered is as follows:
Compressive stress scp=NEd*1E3/(A*1E6)=6.8792 N/mm²
First moment of area of excluded area above and about the centroidal axis of the section S=0.033476 m³
Prestressing coefficient a1=1 (pre-tensioned)
compute comp=(fctd^2+a1*scp*fctd)^0.5
=3.7344 kN
Uncracked shear resistance VRdc1=I*bw/S*comp=644.18 kN

Shear resistance of sections cracked in flexure (VRdc3)

The area of tensile reinforcement and bonded prestressing steel may be included in the calculation of Asl below (i.e. the total area of tensioned and untensioned steel in tension zone).
Area of tensioned steel Ast=2000 mm²
Area of untensioned steel Asu=2500 mm²
Depth from compression face to centroid of steel area in tension zone.
The steel area includes tensioned and untenioned steel.
Effective depth (tensile r'ment) d=940 mm
Limiting compressive stress scp'=5.3333 N/mm²
compute comp=(CRdc*ks*vRdc+0.15*scp')=1.5447
Shear resistance VRdc3=comp*bw*d/1000=363 kN
Minimum shear resistance VRdm=vmin*bw*d/1000=91.888 kN
Shear resistance VRdc3=363 kN

Results from shear resistance calculations

Uncracked section shear resistance 644.18 kN
Cracked section shear resistance 363 kN
The shear force VRdc which can be carried by the concrete alone is the lesser of the above two values.
Shear resistance for concrete section (VRdc) 363 kN
Design shear force (VEd) 660 kN

As VEd > VRdc (660 kN > 363 kN), the design shear force exceeds the shear resistance. Shear reinforcement is required.

Shear reinforcement - in accordance with Clause 6.2.3(3)

Shear reinforcement design is for a slab.
Stress coefficient to be adopted acw=1
Maximum shear resistance:

VRdmax=acw*0.18*bw*d*fck*(1-fck/250)*SIN(RAD(2*theta'))/1000
=987.3 kN

Design shear force VEd=660 kN
Calculations are for a slab section.
Effective depth for shear calc. dt=940 mm
Diameter of link reinforcement bd1=12 mm
Characteristic strength of links fyk=500 N/mm²
Design yield strength of links fyd=fyk/1.15=434.78 N/mm²
Shear force VEd=660 kN exceeds VRdc=363 kN
Spacing of links along the member should be less than
0.75*dt=705 mm or 300 mm whichever is least.
Spacing of links along the member sv=125 mm
Lateral spacing of individual legs of the links at a cross-section
should be less than the smallest of 600 mm or 0.75*dt=705 mm.
Number of legs of links across the member at right angles to
the span sv2=2
Cross-sectional area of all legs of the links at a
member cross-section Asv=sv2*PI*bd1^2/4=226.19 mm²
Area of shear reinforcement required:

Asvr=VEd*1E3*sv/(0.9*dt*fyd*1/TAN(RAD(theta')))
=90.619 mm²

Link reinforcement adequate Area required 90.619 mm²
Area provided 226.19 mm²

Additional longitudinal tensile force - Clause 6.2.3(7)

The additional longitudinal tensile force, Ftd, in the longitudinal reinforcement due to shear VEd is calculated using expression 6.18 and could be provided for by extending the curtailment point of the mid-span longitudinal reinforcement as necessary to achieve the required curtailment anchorage.
compute cot(θ) ctheta=1/TAN(RAD(theta'))=2.4751
Additional long.tensile force Ftd=0.5*VEd*ctheta=816.78 kN
NOTE: As an alternative to the above curtailment option, additional longitudinal reinforcement could be provided to resist the above longitudinal tensile force.

Reinforcement summary

Member under consideration is a slab section.
Link reinforcement adequate Area required 90.619 mm²
Area provided 226.19 mm²
Use 2 No/12 mm diameter legs
of links across the member spaced
at 125 mm centres along the member

The additional longitudinal tensile force, Ftd=816.78 kN, in the longitudinal reinforcement due to shear VEd=660 kN is catered for by extending the curtailment point of the mid-span longitudinal reinforcement as necessary to achieve the required curtailment anchorage. Alternatively additional longitudinal reinforcement could be provided to resist this additional tensile force which is beyond the scope of this proforma.

Location: EX3 - Post-tensioned box (Ex 6.2-3 in thomas telford)

Design shear resistance of a prestressed concrete section

Calculations for the shear resistance at the Ultimate Limit State are in accordance with BS EN 1992-1-1:2004 and the publication entitled "Designers' Guide to EN 1992-2 EC2: Design of concrete structures Part 2: Concrete bridges, by C.R. Hendy and D.A. Smith.

First moment of area:
S=(bf*tf*(dc-tf/2)+comp1+comp2+comp3)/1E9=11.364 m³
Consider a level just underneath the top slab. First moment of area of excluded area above this level and about the centroidal axis of the section Suf=bf*tf*(dc-tf/2)/1E9=10.29 m³

Shear resistance of sections uncracked in flexure (VRdc1)

The following shear resistance check is at the section centroid level.
Prestressing force below is after all losses have occurred.
Prestressing force after loses NEd=92600 kN
Section cross-sectional area A=17 m²
Second moment of area I=33.5 m⁴
The compressive stress (scp) due to axial loading or prestressing (after losses and including appropriate partial safety factors) at the level considered is as follows:
Compressive stress scp=NEd*1E3/(A*1E6)=5.4471 N/mm²
First moment of area of excluded area above and about the centroidal axis of the section S=11.364 m³
compute comp=(fctd^2+a1*scp*fctd)^0.5
=3.2255 kN
Uncracked shear resistance VRdc1=I*bw/S*comp=11857 kN

Shear resistance of sections uncracked in flexure (VRdc2)

In certain sections such as I-beams, where the section width varies over height the maximum principal stress may occur at a level other than at the centroidal axis. In such cases EN 1992-1-1, Clause 6.2.2(2) requires that the minimum value of shear resistance is determined by calculating VRdc at various levels in the cross-section. The following shear resistance check is at the underside of the top slab.
Depth below is to centroid of section from extreme compression fibre.
Depth to centroid of section dc=1588.5 mm
Depth below is to extreme tensile fibre from centroid of section.
Depth to extreme tensile fibre zna=h-dc=1911.5 mm
Top flange thickness tf=350 mm
Compressive stress scp=5.4471 N/mm²
Height of the centroid of prestressing force from extreme compression fibre of the section zpf=644 mm
Flexural stress sbend=NEd*comp/(I*1E9)=-4.3392 N/mm²
Consider a level just underneath the top slab. First moment of area of excluded area above this level and about the centroidal axis of the section Suf=10.29 m³
compute comp=(fctd^2+(a1*scp+sbend)
*fctd)^0.5=1.9757 kN

Uncracked shear resistance VRdc2=I*bw/Suf*comp=8020.7 kN

Shear resistance of sections cracked in flexure (VRdc3)

The area of tensile reinforcement and bonded prestressing steel may be included in the calculation of Asl below (i.e. the total area of tensioned and untensioned steel in tension zone).
Area of tensioned steel Ast=105640 mm²
Area of untensioned steel Asu=0 mm²
Depth from compression face to centroid of steel area in tension zone. The steel area includes tensioned and untenioned steel.
Effective depth (tensile r'ment) d=3250 mm
Limiting compressive stress scp'=4.6667 N/mm²
compute comp=(CRdc*ks*vRdc+0.15*scp')=1.3172
Shear resistance VRdc3=comp*bw*d/1000=5338.5 kN
Minimum shear resistance VRdm=vmin*bw*d/1000=1170.1 kN
Shear resistance VRdc3=5338.5 kN

Results from shear resistance calculations

Uncracked section shear resistance 11857 kN
Uncracked section shear resistance 8020.7 kN
Cracked section shear resistance 5338.5 kN
The shear force VRdc which can be carried by the concrete alone is the lesser of the above three values.
Shear resistance for concrete section (VRdc) 5338.5 kN
Design shear force (VEd) 6000 kN
As VEd > VRdc (6000 kN > 5338.5 kN), the design shear force exceeds the shear resistance. Shear reinforcement is required.

Shear reinforcement - in accordance with Clause 6.2.3(3)

Shear reinforcement design is for a flanged beam.
Stress coefficient to be adopted acw=1
Maximum shear resistance:

```
VRdmax=acw*0.18*bw*d*fck*(1-fck/250)*SIN(RAD(2*theta'))/1000
      =15253 kN
```

Design shear force VEd=6000 kN
Effective depth for shear calc. dt=3250 mm
Diameter of link reinforcement bd1=12 mm
Characteristic strength of links fyk=500 N/mm²
Design yield strength of links fyd=fyk/1.15=434.78 N/mm²
Calculations are for a flanged beam section.
Spacing of links along the member should be less than the smallest of 0.75*dt=2437.5 mm and 300 mm.
Spacing of links along the member sv=300 mm
Lateral spacing of individual legs of the links at a cross-section should be less than the smallest of 600 mm or 0.75*dt=2437.5 mm.
Number of legs of links across the member at right angles to the span sv2=6
Cross-sectional area of all legs of the links at a member cross-section Asv=sv2*PI*bd1^2/4=678.58 mm²

Area of shear reinforcement required:

Asvr=VEd*1E3*sv/(0.9*dt*fyd*1/TAN(RAD(theta')))
=571.85 mm²

Link reinforcement adequate Area required 571.85 mm²
Area provided 678.58 mm²

Additional longitudinal tensile force - Clause 6.2.3(7)

The additional longitudinal tensile force, Ftd, in the longitudinal reinforcement due to shear VEd is calculated using expression 6.18 and could be provided for by extending the curtailment point of the mid-span longitudinal reinforcement as necessary to achieve the required curtailment anchorage.
compute cot(θ) ctheta=1/TAN(RAD(theta'))=2.4751
Additional long.tensile force Ftd=0.5*VEd*ctheta=7425.3 kN
NOTE: As an alternative to the above curtailment option, additional longitudinal reinforcement could be provided to resist the above longitudinal tensile force.

Reinforcement summary

Member under consideration is a flanged beam section.
Link reinforcement adequate Area required 571.85 mm²
Area provided 678.58 mm²
Use 6 No/12 mm diameter legs
of links across the member spaced
at 300 mm centres along the member

The additional longitudinal tensile force, Ftd=7425.3 kN, in the longitudinal reinforcement due to shear VEd=6000 kN is catered for by extending the curtailment point of the mid-span longitudinal reinforcement as necessary to achieve the required curtailment anchorage. Alternatively additional longitudinal reinforcement could be provided to resist this additional tensile force which is beyond the scope of this proforma.

Location: EX4 - As Ex3 but with minimum shear links

Design shear resistance of a prestressed concrete section

Calculations for the shear resistance at the Ultimate Limit State are in accordance with BS EN 1992-1-1:2004 and the publication entitled "Designers' Guide to EN 1992-2 EC2: Design of concrete structures Part 2: Concrete bridges, by C.R. Hendy and D.A. Smith.

First moment of area:
S=(bf*tf*(dc-tf/2)+comp1+comp2+comp3)/1E9=11.364 m³
Consider a level just underneath the top slab. First moment of area of excluded area above this level and about the centroidal axis of the section Suf=bf*tf*(dc-tf/2)/1E9=10.29 m³

Shear resistance of sections uncracked in flexure (VRdc1)

The following shear resistance check is at the section centroid level.
Prestressing force below is after all losses have occurred.
Prestressing force after loses NEd=92600 kN
Section cross-sectional area A=17 m²
Second moment of area I=33.5 m⁴
The compressive stress (scp) due to axial loading or prestressing (after losses and including appropriate partial safety factors) at the level considered is as follows:
Compressive stress scp=NEd*1E3/(A*1E6)=5.4471 N/mm²
First moment of area of excluded area above and about the centroidal axis of the section S=11.364 m³
compute comp=(fctd^2+a1*scp*fctd)^0.5
=3.2255 kN
Uncracked shear resistance VRdc1=I*bw/S*comp=11857 kN

Shear resistance of sections uncracked in flexure (VRdc2)

In certain sections such as I-beams, where the section width varies over height the maximum principal stress may occur at a level other than at the centroidal axis. In such cases EN 1992-1-1, Clause 6.2.2(2) requires that the minimum value of shear resistance is determined by calculating VRdc at various levels in the cross-section. The following shear resistance check is at the underside of the top slab.
Depth below is to centroid of section from extreme compression fibre.
Depth to centroid of section dc=1588.5 mm
Depth below is to extreme tensile fibre from centroid of section.
Depth to extreme tensile fibre zna=h-dc=1911.5 mm
Top flange thickness tf=350 mm
Compressive stress scp=5.4471 N/mm²
Height of the centroid of prestressing force from extreme compression fibre of the section zpf=644 mm
Flexural stress sbend=NEd*comp/(I*1E9)=-4.3392 N/mm²
Consider a level just underneath the top slab. First moment of area of excluded area above this level and about the centroidal axis of the section Suf=10.29 m³
compute comp=(fctd^2+(a1*scp+sbend)
*fctd)^0.5=1.9757 kN

Uncracked shear resistance VRdc2=I*bw/Suf*comp=8020.7 kN

Shear resistance of sections cracked in flexure (VRdc3)

The area of tensile reinforcement and bonded prestressing steel may be included in the calculation of Asl below (i.e. the total area of tensioned and untensioned steel in tension zone).
Area of tensioned steel Ast=105640 mm²
Area of untensioned steel Asu=0 mm²
Depth from compression face to centroid of steel area in tension zone. The steel area includes tensioned and untenioned steel.
Effective depth (tensile r'ment) d=3250 mm
Limiting compressive stress scp'=4.6667 N/mm²
compute comp=(CRdc*ks*vRdc+0.15*scp')=1.3172
Shear resistance VRdc3=comp*bw*d/1000=5338.5 kN
Minimum shear resistance VRdm=vmin*bw*d/1000=1170.1 kN
Shear resistance VRdc3=5338.5 kN

Results from shear resistance calculations

Uncracked section shear resistance 11857 kN
Uncracked section shear resistance 8020.7 kN
Cracked section shear resistance 5338.5 kN
The shear force VRdc which can be carried by the concrete alone is the lesser of the above three values.
Shear resistance for concrete section (VRdc) 5338.5 kN
Design shear force (VEd) 5300 kN
As VEd ≤ VRdc (5300 kN ≤ 5338.5 kN), the design shear force is less than the shear resistance of the section. Hence, provide minimum shear reinforcement.

Shear reinforcement - in accordance with Clause 6.2.3(3)

Shear reinforcement design is for a flanged beam.
Stress coefficient to be adopted acw=1
Maximum shear resistance:

VRdmax=acw*0.18*bw*d*fck*(1-fck/250)*SIN(RAD(2*theta'))/1000
=15253 kN

Design shear force VEd=5300 kN
Effective depth for shear calc. dt=3250 mm
Diameter of link reinforcement bd1=10 mm
Characteristic strength of links fyk=500 N/mm²
Design yield strength of links fyd=fyk/1.15=434.78 N/mm²
Calculations are for a flanged beam section.
Spacing of links along the member should be less than the smallest of 0.75*dt=2437.5 mm and 300 mm.
Spacing of links along the member sv=300 mm
Lateral spacing of individual legs of the links at a cross-section should be less than the smallest of 600 mm or 0.75*dt=2437.5 mm.
Number of legs of links across the member at right angles to the span sv2=6

Cross-sectional area of all legs of the links at a
member cross-section Asv=sv2*PI*bd1^2/4=471.24 mm²
Minimum area of shear r'ment Asvr=0.08*fck^0.5*b*sv/fyk=397.56 mm²
Link reinforcement adequate Area required 397.56 mm²
Area provided 471.24 mm²

Additional longitudinal tensile force - Clause 6.2.3(7)

The additional longitudinal tensile force, Ftd, in the longitudinal reinforcement due to shear VEd is calculated using expression 6.18 and could be provided for by extending the curtailment point of the mid-span longitudinal reinforcement as necessary to achieve the required curtailment anchorage.
compute cot(θ) ctheta=1/TAN(RAD(theta'))=2.4751
Additional long.tensile force Ftd=0.5*VEd*ctheta=6559 kN
NOTE: As an alternative to the above curtailment option, additional longitudinal reinforcement could be provided to resist the above longitudinal tensile force.

Reinforcement summary

Member under consideration is a flanged beam section.
Link reinforcement adequate Area required 397.56 mm²
Area provided 471.24 mm²
Use 6 No/10 mm diameter legs
of links across the member spaced
at 300 mm centres along the member

The additional longitudinal tensile force, Ftd=6559 kN, in the longitudinal reinforcement due to shear VEd=5300 kN is catered for by extending the curtailment point of the mid-span longitudinal reinforcement as necessary to achieve the required curtailment anchorage. Alternatively additional longitudinal reinforcement could be provided to resist this additional tensile force which is beyond the scope of this proforma.

Copyright 1986-2024 Fitzroy Systems Ltd.

Location: EX5 - As Ex3 but using 2 Web Box

Design shear resistance of a prestressed concrete section

Calculations for the shear resistance at the Ultimate Limit State are in accordance with BS EN 1992-1-1:2004 and the publication entitled "Designers' Guide to EN 1992-2 EC2: Design of concrete structures Part 2: Concrete bridges, by C.R. Hendy and D.A. Smith.

First moment of area:
S=(bf*tf*(dc-tf/2)+comp1+comp2)/1E9=10.981 m³
Consider a level just underneath the top slab. First moment of area of excluded area above this level and about the centroidal axis of the section Suf=bf*tf*(dc-tf/2)/1E9=10.29 m³

Shear resistance of sections uncracked in flexure (VRdc1)

The following shear resistance check is at the section centroid level.
Prestressing force below is after all losses have occurred.
Prestressing force after loses NEd=92600 kN
Section cross-sectional area A=17 m²
Second moment of area I=33.5 m⁴
The compressive stress (scp) due to axial loading or prestressing (after losses and including appropriate partial safety factors) at the level considered is as follows:
Compressive stress scp=NEd*1E3/(A*1E6)=5.4471 N/mm²
First moment of area of excluded area above and about the centroidal axis of the section S=10.981 m³
compute comp=(fctd^2+a1*scp*fctd)^0.5
=3.2255 kN
Uncracked shear resistance VRdc1=I*bw/S*comp=7852.6 kN

Shear resistance of sections uncracked in flexure (VRdc2)

In certain sections such as I-beams, where the section width varies over height the maximum principal stress may occur at a level other than at the centroidal axis. In such cases EN 1992-1-1, Clause 6.2.2(2) requires that the minimum value of shear resistance is determined by calculating VRdc at various levels in the cross-section. The following shear resistance check is at the underside of the top slab.
Depth below is to centroid of section from extreme compression fibre.
Depth to centroid of section dc=1588.5 mm
Depth below is to extreme tensile fibre from centroid of section.
Depth to extreme tensile fibre zna=h-dc=1911.5 mm
Top flange thickness tf=350 mm
Compressive stress scp=5.4471 N/mm²
Height of the centroid of prestressing force from extreme compression fibre of the section zpf=644 mm
Flexural stress sbend=NEd*comp/(I*1E9)=-4.3392 N/mm²
Consider a level just underneath the top slab. First moment of area of excluded area above this level and about the centroidal axis of the section Suf=10.29 m³
compute comp=(fctd^2+(a1*scp+sbend)
*fctd)^0.5=1.9757 kN

Uncracked shear resistance VRdc2=I*bw/Suf*comp=5132.7 kN

Shear resistance of sections cracked in flexure (VRdc3)

The area of tensile reinforcement and bonded prestressing steel may be included in the calculation of Asl below (i.e. the total area of tensioned and untensioned steel in tension zone).
Area of tensioned steel Ast=105640 mm²
Area of untensioned steel Asu=0 mm²
Depth from compression face to centroid of steel area in tension zone. The steel area includes tensioned and untenioned steel.
Effective depth (tensile r'ment) d=3250 mm
Limiting compressive stress scp'=4.6667 N/mm²
compute comp=(CRdc*ks*vRdc+0.15*scp')=1.3172
Shear resistance VRdc3=comp*bw*d/1000=3416.3 kN
Minimum shear resistance VRdm=vmin*bw*d/1000=748.77 kN
Shear resistance VRdc3=3416.3 kN

Results from shear resistance calculations

Uncracked section shear resistance 7852.6 kN
Uncracked section shear resistance 5132.7 kN
Cracked section shear resistance 3416.3 kN
The shear force VRdc which can be carried by the concrete alone is the lesser of the above three values.
Shear resistance for concrete section (VRdc) 3416.3 kN
Design shear force (VEd) 6000 kN
As VEd > VRdc (6000 kN > 3416.3 kN), the design shear force exceeds the shear resistance. Shear reinforcement is required.

Shear reinforcement - in accordance with Clause 6.2.3(3)

Shear reinforcement design is for a flanged beam.
Stress coefficient to be adopted acw=1
Maximum shear resistance:

VRdmax=acw*0.18*bw*d*fck*(1-fck/250)*SIN(RAD(2*theta'))/1000
=9761 kN

Design shear force VEd=6000 kN
Effective depth for shear calc. dt=3250 mm
Diameter of link reinforcement bd1=12 mm
Characteristic strength of links fyk=500 N/mm²
Design yield strength of links fyd=fyk/1.15=434.78 N/mm²
Calculations are for a flanged beam section.
Spacing of links along the member should be less than the smallest of 0.75*dt=2437.5 mm and 300 mm.
Spacing of links along the member sv=300 mm
Lateral spacing of individual legs of the links at a cross-section should be less than the smallest of 600 mm or 0.75*dt=2437.5 mm.
Number of legs of links across the member at right angles to the span sv2=6
Cross-sectional area of all legs of the links at a member cross-section Asv=sv2*PI*bd1^2/4=678.58 mm²

Area of shear reinforcement required:

Asvr=VEd*1E3*sv/(0.9*dt*fyd*1/TAN(RAD(theta')))
=571.85 mm²

Link reinforcement adequate Area required 571.85 mm²
Area provided 678.58 mm²

Additional longitudinal tensile force - Clause 6.2.3(7)

The additional longitudinal tensile force, Ftd, in the longitudinal reinforcement due to shear VEd is calculated using expression 6.18 and could be provided for by extending the curtailment point of the mid-span longitudinal reinforcement as necessary to achieve the required curtailment anchorage.
compute cot(θ) ctheta=1/TAN(RAD(theta'))=2.4751
Additional long.tensile force Ftd=0.5*VEd*ctheta=7425.3 kN
NOTE: As an alternative to the above curtailment option, additional longitudinal reinforcement could be provided to resist the above longitudinal tensile force.

Reinforcement summary

Member under consideration is a flanged beam section.
Link reinforcement adequate Area required 571.85 mm²
Area provided 678.58 mm²
Use 6 No/12 mm diameter legs
of links across the member spaced
at 300 mm centres along the member

The additional longitudinal tensile force, Ftd=7425.3 kN, in the longitudinal reinforcement due to shear VEd=6000 kN is catered for by extending the curtailment point of the mid-span longitudinal reinforcement as necessary to achieve the required curtailment anchorage. Alternatively additional longitudinal reinforcement could be provided to resist this additional tensile force which is beyond the scope of this proforma.

Copyright 1986-2024 Fitzroy Systems Ltd.

Location: Ex1 - Edge Beam

Ultimate limit state : shear capacity of a prestressed concrete section

Calculations are in accordance with Departmental Standard BD 44/15 "The Assessment of Concrete Highway Bridges and Structures". Reference is made to BS 5400-4:1990 implemented by Standard CS 454 " Assessment of Highway Bridges and Structures ". Unless noted otherwise, references are to Appendix A of BD 44/15.

Flanged member

Breadth of member b=250 mm
Overall depth of member h=1035 mm
Concrete strength fcu=50 N/mm²
Factor for concrete gmc=1.5
Factor for reinforcement gms=1.15
Factor for shear in concrete gmv=1.25
Compressive stress at centroidal axis due to prestress (fcp).
Stress due to prestress fcp=6.88 N/mm²

Component of prestressing force Vvc=0 kN
Depth to centroid of section from extreme compression fibre:
dc=517.5 mm
Depth to extreme tensile fibre from centroid of concrete section:
y=h-dc=517.5 mm
Second moment of area I=63.969E9 mm⁴
fpt is the stress due to prestress at the extreme tensile fibre
Stress fpt fpt=16.53 N/mm²
fpu=1820 N/mm²
Effective prestress fpe=776 N/mm²
Depth from extreme compression fibre to centroid of all tendons:
d=893 mm
Total area of tensioned and untensioned steel in tension zone:
As=5280 mm²
Depth from compression face to centroid of steel area in tension zone (As). The steel area includes tensioned and untensioned steel.
Depth ds ds=946 mm

fpt1 is the stress due to prestress at depth 893 mm
Stress fpt1 fpt1=13 N/mm²

Shear resistance from reinforcement

Effective depth dt=1144 mm
Distance of section from support av=1500 mm

Angle of inclination of shear r'ment alpha=90°
Asv=226 mm²
fyv=250 N/mm²
In direction of span sv1=175 mm
At right angles to span sv2=150 mm
Applied moment at Section 'S' AMB=3150 kNm
Area of tensioned steel Ast=5280 mm²
Area of untensioned steel Asu=0 mm²
Strength of tensioned steel fput=1820 N/mm²

Results from Shear Capacity Calculations

Concrete Section:
Uncracked Section Shear Capacity 696.14 kN
Equation 30A used to calculate cracked section capacity
Calculations for Mo to BD 44/15
Cracked Section Shear Capacity 898.73 kN
The shear force Vc which can be carried by the concrete alone is the lesser of 696.14 kN and 898.73 kN.
Shear force Vc carried by concrete 696.14 kN
Shear Reinforcement:
Shear capacity 321.17 kN
Total shear capacity of section 1017.3 kN
Maximum shear force as per BD 44/15 Clause 6.3.4.5.
Maximum shear force 1256.2 kN
Total shear capacity of section 1017.3 kN is less than maximum shear force 1256.2 kN.

Tensile capacity of longitudinal r'ment 8356.2 kN is greater than the tensile capacity for bending 3699.8 kN.
Tensile capacity of longitudinal reinforcement is adequate.
Ensure that effective r'ment extends at least 572 mm from Section 'S' in direction of decreasing bending moment.

Copyright 1986-2024 Fitzroy Systems Ltd.

Location: Ex2 - Beam A

Ultimate limit state : shear capacity of a prestressed concrete section

Calculations are in accordance with Departmental Standard BD 44/15 "The Assessment of Concrete Highway Bridges and Structures". Reference is made to BS 5400-4:1990 implemented by Standard CS 454 " Assessment of Highway Bridges and Structures ". Unless noted otherwise, references are to Appendix A of BD 44/15.

Flanged member

Breadth of member b=250 mm
Overall depth of member h=1035 mm
Concrete strength fcu=50 N/mm²
Factor for concrete gmc=1.5
Factor for reinforcement gms=1.15
Factor for shear in concrete gmv=1.25
Compressive stress at centroidal axis due to prestress (fcp).
Stress due to prestress fcp=6.88 N/mm²

Component of prestressing force Vvc=50 kN
Depth to centroid of section from extreme compression fibre:
dc=517.5 mm
Depth to extreme tensile fibre from centroid of concrete section:
y=h-dc=517.5 mm
Second moment of area I=23.098E9 mm⁴
fpt is the stress due to prestress at the extreme tensile fibre
Stress fpt fpt=15.2 N/mm²
Area of tensioned steel Ast=2000 mm²
Area of untensioned steel Asu=2500 mm²
fput=1800 N/mm²
Char strength or worst credible strength of untensioned steel:
fyLu=460 N/mm²
Effective prestressing force after all losses have occurred multiplied by the appropriate partial safety factor from Clause 4.2.3.
Effective force Pf=1780 kN
Depth from extreme compression fibre to centroid of all tendons:
d=900 mm
Total area of tensioned and untensioned steel in tension zone:
As=4500 mm²
Depth from compression face to centroid of steel area in tension zone (As). The steel area includes tensioned and untensioned steel.
Depth ds ds=940 mm

fpt1 is the stress due to prestress at depth 900 mm
Stress fpt1 fpt1=13.03 N/mm²

Shear resistance from reinforcement

Effective depth dt=980 mm
Distance of section from support av=1500 mm
Angle of inclination of shear r'ment alpha=75°
Asv=226 mm²
fyv=250 N/mm²
In direction of span sv1=175 mm
At right angles to span sv2=150 mm
Value of K for calculations K=1.2679
Applied moment at Section 'B' AM=2000 kNm
Co-existent TOTAL shear force at Section 'B' AV=250 kN
Total area of tensioned and untensioned steel in tension zone (As)
Area of steel As=4500 mm²
Depth from compression face to centroid of steel area in tension zone (As). The steel area includes tensioned and untensioned steel.
Depth ds ds=940 mm
Constant KVC KVC=0.24
Area of tensioned steel Asta=2000 mm²
Area of untensioned steel Asua=2500 mm²
Strength of tensioned steel fputa=1800 N/mm²
Strength of untensioned steel fyLua=460 N/mm²

Results from Shear Capacity Calculations

Concrete Section:
Uncracked Section Shear Capacity 746.14 kN
Equation 30A used to calculate cracked section capacity
Calculations for Mo to BD 44/15
Cracked Section Shear Capacity 412.12 kN
The shear force Vc which can be carried by the concrete alone is the lesser of 746.14 kN and 412.12 kN.
Shear force Vc carried by concrete 412.12 kN
Shear Reinforcement:
Shear capacity 336.96 kN
Total shear capacity of section 749.09 kN
Maximum shear force as per BD 44/15 Clause 6.3.4.5.
Maximum shear force 1248.2 kN
Total shear capacity of section 749.09 kN is less than maximum shear force 1248.2 kN.

Tensile capacity of longitudinal r'ment 4130.4 kN exceeds required tensile capacity of 2391.1 kN required by the bending moment and co-existent shear force carried by the shear reinforcement at Section B.
Tensile capacity of longitudinal reinforcement is adequate.

Copyright 1986-2024 Fitzroy Systems Ltd.

Location: Ex3 - Beam B

Ultimate limit state : shear capacity of a prestressed concrete section

Calculations are in accordance with Departmental Standard BD 44/15 "The Assessment of Concrete Highway Bridges and Structures". Reference is made to BS 5400-4:1990 implemented by Standard CS 454 " Assessment of Highway Bridges and Structures ". Unless noted otherwise, references are to Appendix A of BD 44/15.

Rectangular member

Breadth of member b=250 mm
Overall depth of member h=1035 mm
Concrete strength fcu=50 N/mm²
Factor for concrete gmc=1.5
Factor for reinforcement gms=1.15
Factor for shear in concrete gmv=1.25
Compressive stress at centroidal axis due to prestress (fcp).
Stress due to prestress fcp=6.88 N/mm²

Component of prestressing force Vvc=50 kN
Depth to centroid of section from extreme compression fibre:
dc=517.5 mm
Depth to extreme tensile fibre from centroid of concrete section:
y=h-dc=517.5 mm
Second moment of area I=23.098E9 mm⁴
fpt is the stress due to prestress at the extreme tensile fibre
Stress fpt fpt=15.2 N/mm²
Area of tensioned steel Ast=1500 mm²
Area of untensioned steel Asu=500 mm²
fput=1800 N/mm²
Char strength or worst credible strength of untensioned steel:
fyLu=460 N/mm²
Effective prestressing force after all losses have occurred multiplied by the appropriate partial safety factor from Clause 4.2.3.
Effective force Pf=1780 kN
Depth from extreme compression fibre to centroid of all tendons:
d=600 mm
Depth from compression face to centroid of steel area in tension zone (As). The steel area includes tensioned and untensioned steel.
Depth ds ds=940 mm

Shear resistance from reinforcement

Effective depth dt=940 mm
Distance of section from support av=1500 mm

Copyright 1986-2024 Fitzroy Systems Ltd.

Angle of inclination of shear r'ment	alpha=90°
	Asv=226 mm²
	fyv=250 N/mm²
In direction of span	sv1=300 mm
At right angles to span	sv2=150 mm
Applied moment at Section B	AM=2000 kNm
Co-existent TOTAL shear force	AV=550 kN
Area of steel	As=2000 mm²
Depth ds	ds=940 mm
Constant KVC	KVC=0.24
Area of tensioned steel	Ast=1500 mm²
Area of untensioned steel	Asu=500 mm²
Strength of tensioned steel	fput=1800 N/mm²
Strength of untensioned steel	fyLu=460 N/mm²
Maximum moment in region	Mmax=4000 kNm
Associated effective depth	dtmax=940 mm

Results from Shear Capacity Calculations

Concrete Section:
Uncracked Section Shear Capacity 746.14 kN
Equation 29A used to calculate cracked section capacity
Cracked Section Shear Capacity 284.91 kN
The shear force Vc which can be carried by the concrete alone is the lesser of 746.14 kN and 284.91 kN.
Shear force Vc carried by concrete 284.91 kN
Shear Reinforcement:
Shear capacity 59.942 kN
Total shear capacity of section 344.86 kN
Maximum shear force as per BD 44/15 Clause 6.3.4.5.
Maximum shear force 1248.2 kN
Total shear capacity of section 344.86 kN is less than maximum shear force 1248.2 kN.

Tensile capacity of longitudinal r'ment 2547.8 kN is less than the tensile capacity of 2571.9 kN required by the bending moment and co-existent shear force carried by the shear reinforcement at Section B.
Tensile capacity of longitudinal r'ment 2547.8 kN is less than required tensile capacity for Mmax of 4728.1 kN
Tensile capacity of longitudinal reinforcement not adequate.

Copyright 1986-2024 Fitzroy Systems Ltd.

Location: Ex4 - Beam C

Ultimate limit state : shear capacity of a prestressed concrete section

Calculations are in accordance with Departmental Standard BD 44/15 "The Assessment of Concrete Highway Bridges and Structures". Reference is made to BS 5400-4:1990 implemented by Standard CS 454 " Assessment of Highway Bridges and Structures ". Unless noted otherwise, references are to Appendix A of BD 44/15.

Transmission length lt=1300 mm

Flanged member

Breadth of member b=300 mm
Overall depth of member h=950 mm
Concrete strength fcu=40 N/mm²
Factor for concrete gmc=1.2
Factor for reinforcement gms=1.1
Factor for shear in concrete gmv=1.15
Compressive stress at centroidal axis due to prestress (fcp).
Stress due to prestress fcp=8.6 N/mm²

Distance from start of transmission length (zero stress end):
dlt(1)=500 mm

Component of prestressing force Vvc=0 kN
Depth to centroid of section from extreme compression fibre:
dc=400 mm
Depth to extreme tensile fibre from centroid of concrete section:
y=h-dc=550 mm
Second moment of area I=35.6E9 mm⁴
fpt is the stress due to prestress at the extreme tensile fibre
Stress fpt at end of transmission length:
fpt=14 N/mm²
Area of tensioned steel Ast=2500 mm²
Area of untensioned steel Asu=1100 mm²
Char strength or worst credible strength of tensioned steel:
fput=1720 N/mm²
Char strength or worst credible strength of untensioned steel:
fyLu=460 N/mm²
Effective prestressing force after all losses have occurred multiplied by the appropriate partial safety factor from Clause 4.2.3
Effective force Pf=1500 kN
Depth from extreme compression fibre to centroid of all tendons:
d=850 mm
Total area of tensioned and untensioned steel in tension zone:
As=3600 mm²
Depth from compression face to centroid of steel area in tension zone (As). The steel area includes tensioned and untensioned steel.
Depth ds ds=940 mm

Area of tension reinforcement As=3600 mm²
Effective depth of tensile r'ment d=850 mm
Distance of section from support av=400 mm

Shear resistance from reinforcement

Effective depth dt=900 mm
Distance of section from support av=400 mm
Resistance (Σ WRV) WRV=400 kN

Results from Shear Capacity Calculations

Results for section 500 mm from start of transmission length.
Prestressed Concrete Section:
Uncracked Section Shear Capacity 589.3 kN
Applied moment is less than cracking moment.
The shear force Vc which can be carried by the concrete alone is the uncracked capacity 589.3 kN.
Reinforced Concrete Section:
Reinforced Concrete Shear Capacity 758.9 kN
The shear force Vc which can be carried by the concrete alone is the greater of 589.3 kN and 758.9 kN.
Shear force carried by concrete 758.9 kN
Shear Reinforcement:
Shear capacity 400 kN
Total shear capacity of section 1158.9 kN
Maximum shear force as per BD 44/15 Clause 6.3.4.5.
Maximum shear force 1497.9 kN
Total shear capacity of section 1158.9 kN is less than maximum shear force 1497.9 kN.

Tensile capacity of longitudinal reinforcement not assessed.

Location: 13.5 metre span TY7 beam with solid infill

Precast prestressed concrete TY beams with in-fill concrete

Calculations for stresses at the Serviceability Limit State (SLS) to BS5400-4:1990 implemented by DOT Departmental Standard BD 44/15.

Span of beam span=13.5 m

Beam TY 7 section properties

Depth of beam d=700 mm
Cross-sectional area Ac=272194 mm²
Centroid above soffit Yb=272.9 mm
Section modulus top Zt=29.42E6 mm³
Section modulus bottom Zb=46.04E6 mm³
Unit weight of beam uwb=25 kN/m³

Concrete strengths

Strength at transfer fci=40 N/mm²
Characteristic strength fcu=50 N/mm²

Concrete moduli

Modulus of elasticity at transfer for concrete strength 40 N/mm² is:
Eci=31 kN/mm²
Modulus of elasticity for concrete strength 50 N/mm² is:
Modulus Ecb=34 kN/mm²

Composite section properties

Char strength of in-situ concrete fcuc=40 N/mm²
Modulus of elasticity for concrete strength 40 N/mm² is:
Ecc=31 kN/mm²

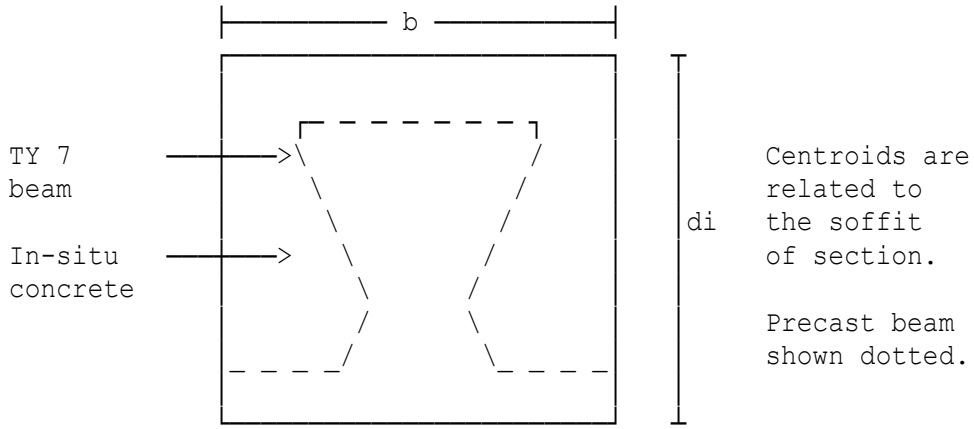

Breadth of rectangular section b=765 mm
Depth of rectangular section di=875 mm
Second moment of area Ic=Ixx+Ac*(Yb-Yc)^2+mr*(Ii+Ai*(Yi -Yc)^2)=42.708E9 mm⁴

Initial force per strand if=116 kN
Modulus of elasticity Es=200 kN/mm²

Cross-section 1

Distance from mid-span of beam csd(1)=0 m
Number of layers of strand nls(1)=4
Height above soffit ds(1)=60 mm
Number of strands ns(1)=11
Height above soffit ds(2)=100 mm
Number of strands ns(2)=9
Height above soffit ds(3)=140 mm
Number of strands ns(3)=5
Height above soffit ds(4)=650 mm
Number of strands ns(4)=2

Short Term Losses

Relaxation at transfer (%) str=1

Summary

Loss	Loss of Force kN	% Loss
Relaxation	31.32	1
Elastic Shortening	264.08	8.4316
Transfer Total	295.4	9.4316

Losses at Transfer

Initial force 3132 kN
Force at transfer Pt=P0-loft=2836.6 kN

Loading	Stresses at Transfer N/mm²		
	Top of Beam	Bottom of Beam	Centroid of Strands
Prestress	-3.1793	19.111	14.913
Self weight of Beam	5.2697	-3.3671	-1.7403
Total	2.0904	15.744	13.172

Beam Concrete Stresses at Transfer

Stress Limitations

Top of beam:
Compressive stress 2.0904 N/mm² is less than allowable stresses of 0.5*fci=20 N/mm² and 0.4*fcu=20 N/mm².

Bottom of beam:
Compressive stress 15.744 N/mm² is less than allowable stresses of 0.5*fci=20 N/mm² and 0.4*fcu=20 N/mm².

Long Term Losses

Relaxation after transfer(%) slr(1)=1.5
Shrinkage per unit length sul(1)=0.3E-3

Summary

Loss	Loss of Force kN	% Loss
Relaxation Elastic Shortening	31.32 264.08	1 8.4316
Transfer Total	295.4	9.4316
Relaxation Shrinkage Creep	46.98 150.66 346.24	1.5 4.8103 11.055
Long-term Total	543.88	17.365
All Losses	839.28	26.797

Losses - Long term

Initial force 3132 kN
Final force Pf=P0-loftl=2292.7 kN

Unit-weight of in-situ concrete wc=25 kN/m³

Loading	Final Stresses N/mm²		
	Top of Beam	Bottom of Beam	Centroid of Strands
Prestress Self weight of Beam In-situ concrete	-2.5697 5.2697 7.6895	15.447 -3.3671 -4.9133	12.053 -1.7403 -2.5394
Total	10.389	7.1667	7.7737

Beam concrete stresses - Long term

Height from beam soffit to
bottom of in-situ concrete hsis=135 mm

Combination 1 loading

Applied bending moment c1b(1)=320 kNm

Loading	Combination 1 Stresses N/mm²			
	Top of in-situ	Top of Beam	Bottom of in-situ	Bottom of Beam
Prestress,beam and in-situ	0	10.389	0	7.1667
Combination 1	3.6879	2.2127	-2.2666	-3.2781
Total	3.6879	12.602	-2.2666	3.8886

Combination 1 Loading - Stresses

Combination 2 to 5 loading

Applied bending moment c2b(1)=400 kNm

Loading	Combination 2 to 5 Stresses N/mm²			
	Top of in-situ	Top of Beam	Bottom of in-situ	Bottom of Beam
Prestress,beam and in-situ	0	10.389	0	7.1667
Combination 2-5	4.0976	2.4586	-2.8332	-4.0976
Total	4.0976	12.848	-2.8332	3.0691

Combination 2 to 5 Loading - Stresses

Combination 3 loading. The stresses from the proforma for temperature differences should be added to the total stresses.
Top of in-situ concrete:
Compressive stress 4.0976 N/mm² is less than the maximum allowable stress of 0.5*fcuc=20 N/mm².
Top of beam:
Compressive stress 12.848 N/mm² is less than the maximum allowable stress of 0.4*fcu=20 N/mm².
Bottom of in-situ concrete:
Tensile stress 2.8332 N/mm² is less than the maximum allowable tensile stress of 4.4 N/mm² from Table 32.

Bottom of beam:
Compressive stress 3.0691 N/mm² is less than the maximum allowable stress of 0.4*fcu=20 N/mm².

Copyright 1986-2024 Fitzroy Systems Ltd.

Location: 13.5 metre span TY7 edge beam with solid infill

Precast prestressed concrete TY beams with in-fill concrete

Calculations for stresses at the Serviceability Limit State (SLS) to BS5400-4:1990 implemented by DOT Departmental Standard BD 44/15.

Span of beam span=13.5 m

Beam TY 7 section properties

Depth of beam d=700 mm
Cross-sectional area Ac=272194 mm²
Centroid above soffit Yb=272.9 mm
Section modulus top Zt=29.42E6 mm³
Section modulus bottom Zb=46.04E6 mm³
Unit weight of beam uwb=25 kN/m³

Concrete strengths

Strength at transfer fci=40 N/mm²
Characteristic strength fcu=50 N/mm²

Concrete moduli

Modulus of elasticity at transfer for concrete strength 40 N/mm² is:
Eci=31 kN/mm²
Modulus of elasticity for concrete strength 50 N/mm² is:
Modulus Ecb=34 kN/mm²

Composite section properties

Char strength of in-situ concrete fcuc=30 N/mm²
Modulus of elasticity for concrete strength 30 N/mm² is:
Ecc=28 kN/mm²
Item weighting iw1=0.82353
X co-ordinate X(1)=0 mm
Y co-ordinate Y(1)=0 mm
X co-ordinate X(2)=765 mm
Y co-ordinate Y(2)=0 mm
X co-ordinate X(3)=765 mm
Y co-ordinate Y(3)=250 mm
X co-ordinate X(4)=915 mm
Y co-ordinate Y(4)=350 mm
X co-ordinate X(5)=915 mm
Y co-ordinate Y(5)=875 mm
X co-ordinate X(6)=415 mm
Y co-ordinate Y(6)=875 mm
X co-ordinate X(7)=415 mm
Y co-ordinate Y(7)=775 mm
X co-ordinate X(8)=0 mm
Y co-ordinate Y(8)=775 mm
X co-ordinate X(9)=0 mm
Y co-ordinate Y(9)=0 mm

Second moment of area	IXX2=12.563E9 mm⁴
Area of item	A2=272247 mm²
Centroid from X-X axis	YC2=272.94 mm
Item weighting	iw2=0.17647
Depth of composite section	di=775 mm
Nominal diameter	nomd=12 mm
Nominal tensile strength	nomt=1700 N/mm²
Nominal steel area	noma=100 mm²
Characteristic breaking load	cbl=150 kN
Initial force per strand	if=100 kN
Modulus of elasticity	Es=200 kN/mm²

Cross-section 1

Distance from mid-span of beam	csd(1)=2 m
Number of layers of strand	nls(1)=4
Height above soffit	ds(1)=60 mm
Number of strands	ns(1)=11
Height above soffit	ds(2)=100 mm
Number of strands	ns(2)=13
Height above soffit	ds(3)=140 mm
Number of strands	ns(3)=8
Height above soffit	ds(4)=650 mm
Number of strands	ns(4)=2
Bending moment from temp. loads	tlb(1)=80 kNm
Bending moment from other loads	olb(1)=50 kNm

Short Term Losses

Relaxation at transfer (%)	str=1

Summary

Loss	Loss of Force kN	% Loss
Relaxation	34	1
Elastic Shortening	393.24	11.566
Transfer Total	427.24	12.566

Losses at Transfer

Initial force	3400 kN
Force at transfer	Pt=P0-loft=2972.8 kN

Loading	Stresses at Transfer N/mm²		
	Top of Beam	Bottom of Beam	Centroid of Strands
Prestress	-3.6379	20.224	15.833
Self weight of Beam	4.8071	-3.0715	-1.6216
Temporary Loads	2.7194	-1.7376	-0.91737
Other Loads	1.6997	-1.086	-0.57336
Total	5.5883	14.329	12.721

Beam Concrete Stresses at Transfer

Stress Limitations

Top of beam:
Compressive stress 5.5883 N/mm² is less than allowable stresses of 0.5*fci=20 N/mm² and 0.4*fcu=20 N/mm².
Bottom of beam:
Compressive stress 14.329 N/mm² is less than allowable stresses of 0.5*fci=20 N/mm² and 0.4*fcu=20 N/mm².

Long Term Losses

Relaxation after transfer(%) slr(1)=1.5
Shrinkage per unit length sul(1)=0.3E-3

Summary

Loss	Loss of Force kN	% Loss
Relaxation	34	1
Elastic Shortening	393.24	11.566
Transfer Total	427.24	12.566
Relaxation	51	1.5
Shrinkage	204	6
Creep	490.77	14.434
Long-term Total	745.77	21.934
All Losses	1173	34.5

Losses - Long term

Initial force 3400 kN
Final force Pf=P0-loftl=2227 kN

Unit-weight of in-situ concrete wc=25 kN/m³

Loading	Final Stresses N/mm²		
	Top of Beam	Bottom of Beam	Centroid of Strands
Prestress	-2.7253	15.151	11.861
Self weight of Beam	4.8071	-3.0715	-1.6216
In-situ concrete	7.8038	-4.9863	-2.6325
Total	9.8856	7.0929	7.6068

Beam concrete stresses - Long term

Composite section

Height from beam soffit to
bottom of in-situ concrete hsis=135 mm
Perc'age of shrinkage remaining ps=40 %
Percentage pcr=40 %
Percentage stT=50 %
Apply moment to beam to straighten it as follows:
The net moment is Mc=F*e/1E3-Mb=-145.59 kNm
Stress at top of in-situ concrete:
ftisds=-(F/(Ai*mr)-F/(Ai*mr+Ac)-Mc*1E3*(di-Yc)/Ic)*mr*1E3
=0.10329 N/mm²
Stress at bottom of in-situ concrete:
fbisds=-(F/(Ai*mr)-F/(Ai*mr+Ac)-Mc*1E3*(hsis-Yc)/Ic)*mr*1E3
=2.1815 N/mm²
Stress at top of precast concrete beam:
ftpbds=(F/(Ai*mr+Ac)+Mc*1E3*(d-Yc)/Ic+Mb*1E3*Yt/Ixx)*1E3
=-3.0552 N/mm²
Stress at bottom of precast concrete beam:
fbpbds=(F/(Ai*mr+Ac)-Mc*1E3*Yc/Ic-Mb*1E3*Yb/Ixx)*1E3=-0.42523 N/mm²

Combination 1 loading

Applied bending moment c1b(1)=550 kNm

Loading	Combination 1 Stresses N/mm²			
	Top of in-situ	Top of Beam	Bottom of in-situ	Bottom of Beam
Prestress,beam and in-situ	0	9.8856	0	7.0929
Dif. shrinkage	0.10329	-3.0552	2.1815	-0.42523
Combination 1	4.7384	4.535	-3.5074	-6.27
Total	4.8417	11.365	-1.326	0.39766

Combination 1 Loading - Stresses

Combination 2 to 5 loading

Applied bending moment c2b(1)=625 kNm

Loading	Combination 2 to 5 Stresses N/mm²			
	Top of in-situ	Top of Beam	Bottom of in-situ	Bottom of Beam
Prestress,beam and in-situ	0	9.8856	0	7.0929
Dif. shrinkage	0.10329	-3.0552	2.1815	-0.42523
Combination 2-5	4.9358	4.724	-3.9857	-7.125
Total	5.0391	11.554	-1.8043	-0.45734

Combination 2 to 5 Loading - Stresses

Combination 3 loading. The stresses from the proforma for temperature differences should be added to the total stresses.
Top of in-situ concrete:
Compressive stress 5.0391 N/mm² is less than the maximum allowable stress of 0.5*fcuc=15 N/mm².
Top of beam:
Compressive stress 11.554 N/mm² is less than the maximum allowable stress of 0.4*fcu=20 N/mm².
Bottom of in-situ concrete:
Tensile stress 1.8043 N/mm² is less than the maximum allowable tensile stress of 3.6 N/mm² from Table 32.

Bottom of beam:
Tensile stress 0.45734 N/mm² is less than the maximum allowable tensile stress of 3.182 N/mm².

Copyright 1986-2024 Fitzroy Systems Ltd.

Location: 15.0 metre span TY9 beam

Precast prestressed concrete TY beams with in-fill concrete

Calculations for stresses at the Serviceability Limit State (SLS) to BS5400-4:1990 implemented by DOT Departmental Standard BD 44/15.

Span of beam span=15 m

Beam TY 9 section properties

Depth of beam d=800 mm
Cross-sectional area Ac=308163 mm²
Centroid above soffit Yb=328.6 mm
Section modulus top Zt=42.11E6 mm³
Section modulus bottom Zb=60.4E6 mm³
Unit weight of beam uwb=25 kN/m³

Concrete strengths

Strength at transfer fci=35 N/mm²
Characteristic strength fcu=40 N/mm²

Concrete moduli

Modulus of elasticity at transfer for concrete strength 35 N/mm² is:
Eci=29.5 kN/mm²
Modulus of elasticity for concrete strength 40 N/mm² is:
Modulus Ecb=31 kN/mm²

Composite section properties

Char strength of in-situ concrete fcuc=35 N/mm²
Modulus of elasticity for concrete strength 35 N/mm² is:
Ecc=29.5 kN/mm²

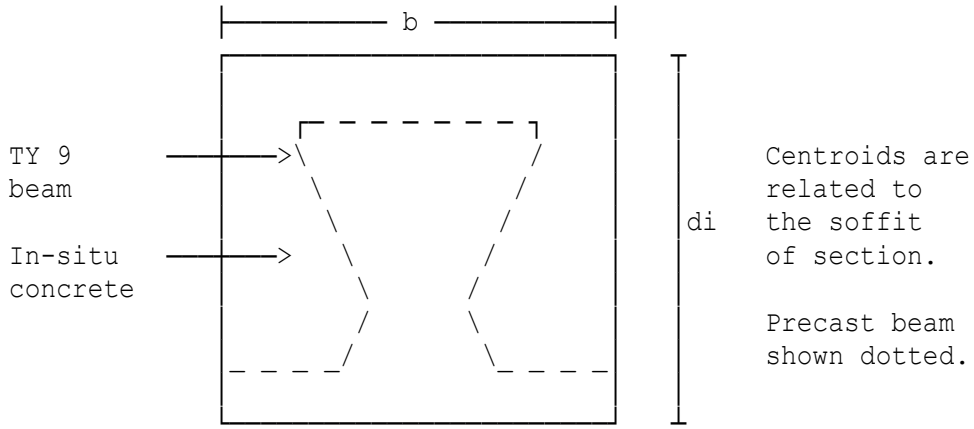

Breadth of rectangular section b=765 mm
Depth of rectangular section di=875 mm
Second moment of area Ic=Ixx+Ac*(Yb-Yc)^2+mr*(Ii+Ai*(Yi -Yc)^2)=42.708E9 mm⁴

Initial force per strand if=130 kN
Modulus of elasticity Es=200 kN/mm²

Cross-section 1

Distance from mid-span of beam csd(1)=6 m
Number of layers of strand nls(1)=6
Height above soffit ds(1)=60 mm
Number of strands ns(1)=9
Height above soffit ds(2)=100 mm
Number of strands ns(2)=9
Height above soffit ds(3)=140 mm
Number of strands ns(3)=5
Height above soffit ds(4)=650 mm
Number of strands ns(4)=2
Height above soffit ds(5)=700 mm
Number of strands ns(5)=2
Height above soffit ds(6)=750 mm
Number of strands ns(6)=2

Short Term Losses

Relaxation at transfer (%) str=1

Summary

Loss	Loss of Force kN	% Loss
Relaxation Elastic Shortening	37.7 282.84	1 7.5025
Transfer Total	320.54	8.5025

Losses at Transfer

Initial force 3770 kN
Force at transfer Pt=P0-loft=3449.5 kN

Loading	Stresses at Transfer N/mm²		
	Top of Beam	Bottom of Beam	Centroid of Strands
Prestress Self weight of Beam	2.1832 1.8527	17.475 -1.2915	13.296 -0.43224
Total	4.0358	16.183	12.864

Beam Concrete Stresses at Transfer

Stress Limitations

Top of beam:
Compressive stress 4.0358 N/mm² is less than allowable stresses of 0.5*fci=17.5 N/mm² and 0.4*fcu=16 N/mm².
Bottom of beam:

WARNING:
Compressive stress 16.183 N/mm² is less than allowable stress of 0.5*fci=17.5 N/mm² but exceeds 0.4*fcu=16 N/mm².

Long Term Losses

Relaxation after transfer(%) slr(1)=2
Shrinkage per unit length sul(1)=0.3E-3

Summary

Loss	Loss of Force kN	% Loss
Relaxation Elastic Shortening	37.7 282.84	1 7.5025
Transfer Total	320.54	8.5025
Relaxation Shrinkage Creep	75.4 174 488.5	2 4.6154 12.958
Long-term Total	737.9	19.573
All Losses	1058.4	28.075

Losses - Long term

Initial force 3770 kN
Final force Pf=P0-loftl=2711.6 kN

Unit-weight of in-situ concrete wc=25 kN/m³

Loading	Final Stresses N/mm²		
	Top of Beam	Bottom of Beam	Centroid of Strands
Prestress Self weight of Beam In-situ concrete	1.7161 1.8527 2.1716	13.736 -1.2915 -1.5138	10.452 -0.43224 -0.50664
Total	5.7404	10.931	9.5127

Beam concrete stresses - Long term

Height from beam soffit to
bottom of in-situ concrete hsis=135 mm

Combination 1 loading

Applied bending moment c1b(1)=200 kNm

Loading	Combination 1 Stresses N/mm²			
	Top of in-situ	Top of Beam	Bottom of in-situ	Bottom of Beam
Prestress,beam and in-situ	0	5.7404	0	10.931
Combination 1	2.3049	1.9098	-1.4166	-2.0488
Total	2.3049	7.6502	-1.4166	8.8824

Combination 1 Loading - Stresses

Combination 2 to 5 loading

Applied bending moment c2b(1)=250 kNm

Loading	Combination 2 to 5 Stresses N/mm²			
	Top of in-situ	Top of Beam	Bottom of in-situ	Bottom of Beam
Prestress,beam and in-situ	0	5.7404	0	10.931
Combination 2-5	2.561	2.122	-1.7708	-2.561
Total	2.561	7.8624	-1.7708	8.3702

Combination 2 to 5 Loading - Stresses

Combination 3 loading. The stresses from the proforma for temperature differences should be added to the total stresses.
Top of in-situ concrete:
Compressive stress 2.561 N/mm² is less than the maximum allowable stress of 0.5*fcuc=17.5 N/mm².
Top of beam:
Compressive stress 7.8624 N/mm² is less than the maximum allowable stress of 0.4*fcu=16 N/mm².
Bottom of in-situ concrete:
Tensile stress 1.7708 N/mm² is less than the maximum allowable tensile stress of 4 N/mm² from Table 32.

Bottom of beam:
Compressive stress 8.3702 N/mm² is less than the maximum allowable stress of 0.4*fcu=16 N/mm².

Location: Ex1 - 13.5 metre span TY7 beam with solid infill

Precast prestressed concrete TY beams with in-fill concrete

Calculations for stresses at the Serviceability Limit State (SLS) in accordance with BS EN 1992-2:2005 and NA to BS EN 1992-2:2005.

Span of beam span=13.5 m

Beam TY 7 section properties

Depth of beam d=700 mm
Cross-sectional area Ac=272194 mm²
Centroid above soffit Yb=272.9 mm
Section modulus top Zt=29.42E6 mm³
Section modulus bottom Zb=46.04E6 mm³
Unit weight of beam uwb=25 kN/m³

Concrete compressive strengths

Characteristic cylinder strength fcki=32 N/mm² (transfer)
Characteristic cylinder strength fck=40 N/mm²

Concrete moduli (short-term)

Concrete modulus of elasticity Ecmi=33 kN/mm² (transfer)
Concrete modulus of elasticity Ecmb=35 kN/mm²

Composite section properties

Char strength (in-situ concrete) fckc=32 N/mm²
Short-term modulus of elasticity
for in-situ concrete Ecmc=33 kN/mm²

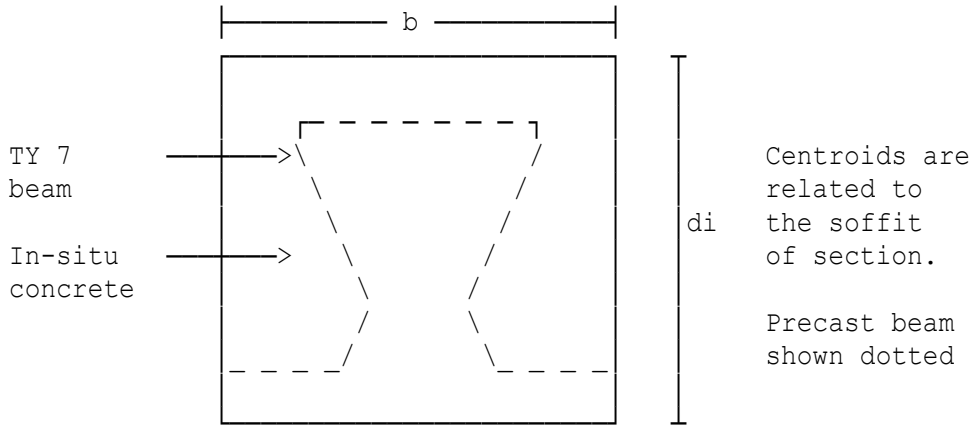

Breadth of rectangular section b=765 mm
Depth of rectangular section di=875 mm
Second moment of area Ic=Iyy+Ac*(Yb-Yc)^2+mr*(Ii+Ai*(Yi -Yc)^2)=42.708E9 mm⁴
Modulus of elasticity (strand) Ep=195 kN/mm²

Cross-section 1

Distance from mid-span of beam csd(1)=0 m
Number of layers of strand nls(1)=4
Height above soffit ds(1)=60 mm
Number of strands ns(1)=11
Height above soffit ds(2)=100 mm
Number of strands ns(2)=9
Height above soffit ds(3)=140 mm
Number of strands ns(3)=5
Height above soffit ds(4)=650 mm
Number of strands ns(4)=2

Short Term Losses (BS EN 1992-1-1)

Relaxation at transfer (%) str=1

Summary

Loss	Loss of Force kN	% Loss
Relaxation Elastic Shortening	31.32 224.37	1 7.1638
Transfer Total	255.69	8.1638

Losses at Transfer

Initial force 3132 kN
Force at transfer Pt=P0-loft=2876.3 kN

Loading	Stresses at Transfer N/mm²		
	Top of Beam	Bottom of Beam	Centroid of Strands
Prestress Self weight of Beam	-3.2238 5.2697	19.379 -3.3671	15.122 -1.7403
Total	2.0459	16.012	13.381

Beam Concrete Stresses at Transfer

Stress Limitations (BS EN 1992-1-1, Clause 5.10.2.2)

Top of beam:
Compressive stress 2.0459 N/mm² is less than allowable stresses of 0.7*fcki=22.4 N/mm² and 0.6*fck=24 N/mm².

Bottom of beam:
Compressive stress 16.012 N/mm² is less than allowable stresses of 0.7*fcki=22.4 N/mm² and 0.6*fck=24 N/mm².

Long Term Losses (BS EN 1992-1-1, Clause 5.10.6(1))

Relaxation after transfer(%) slr(1)=1.5
Shrinkage per unit length sul(1)=0.3E-3
Creep coefficient φ(∞,to) crf=2

Summary

Loss	Loss of Force kN	% Loss
Relaxation Elastic Shortening	31.32 224.37	1 7.1638
Transfer Total	255.69	8.1638
Relaxation Shrinkage Creep	46.98 146.89 403.79	1.5 4.6901 12.892
Long-term Total	597.66	19.082
All Losses	853.35	27.246

Losses - Long term

Initial force 3132 kN
Final force Pf=P0-loftl=2278.6 kN

Unit-weight of in-situ concrete wc=25 kN/m³

Loading	Final Stresses N/mm²		
	Top of Beam	Bottom of Beam	Centroid of Strands
Prestress Self weight of Beam In-situ concrete	-2.5539 5.2697 7.6895	15.352 -3.3671 -4.9133	11.979 -1.7403 -2.5394
Total	10.405	7.0719	7.6998

Beam concrete stresses - Long term

Height from beam soffit to
bottom of in-situ concrete hsis=135 mm

Loading Combination 1

No tensile stress permitted in precast beam.
Characteristic bending moment c1b(1)=320 kNm

Loading	Loading Combination 1 Stresses N/mm²			
	Top of in-situ	Top of Beam	Bottom of in-situ	Bottom of Beam
Prestress,beam and in-situ	0	10.405	0	7.0719
Combination 1	3.6879	2.2127	-2.2666	-3.2781
Total	3.6879	12.618	-2.2666	3.7938

Loading Combination 1 - Stresses

Loading Combination 2

Tensile stress permitted (no visible cracking).
Characteristic bending moment c2b(1)=400 kNm

Loading	Loading Combination 2 Stresses N/mm²			
	Top of in-situ	Top of Beam	Bottom of in-situ	Bottom of Beam
Prestress,beam and in-situ	0	10.405	0	7.0719
Combination 2	4.0976	2.4586	-2.8332	-4.0976
Total	4.0976	12.864	-2.8332	2.9742

Loading Combination 2 - Stresses

NOTE: The stresses from temperature differences should be added to the total stresses.

Top of in-situ concrete:
Compressive stress 4.0976 N/mm² is less than the maximum allowable stress of 0.6*fckc=19.2 N/mm².
Top of beam:
Compressive stress 12.864 N/mm² is less than the maximum allowable stress of 0.6*fck=24 N/mm².

Bottom of in-situ concrete:
Tensile stress 2.8332 N/mm² is less than the maximum allowable tensile stress of 3.0231 N/mm² (EN 1992-1-1 expression 3.23).
Bottom of beam:
Compressive stress 2.9742 N/mm² is less than the maximum allowable stress of 0.6*fck=24 N/mm².

Copyright 1986-2024 Fitzroy Systems Ltd.

Location: Ex2 - 13.5 metre span TY7 edge beam with solid infill

Precast prestressed concrete TY beams with in-fill concrete

Calculations for stresses at the Serviceability Limit State (SLS) in accordance with BS EN 1992-2:2005 and NA to BS EN 1992-2:2005.

Span of beam	span=13.5 m

Beam TY 7 section properties

Depth of beam	d=700 mm
Cross-sectional area	Ac=272194 mm²
Centroid above soffit	Yb=272.9 mm
Section modulus top	Zt=29.42E6 mm³
Section modulus bottom	Zb=46.04E6 mm³
Unit weight of beam	uwb=25 kN/m³

Concrete compressive strengths

Characteristic cylinder strength	fcki=32 N/mm² (transfer)
Characteristic cylinder strength	fck=40 N/mm²

Concrete moduli (short-term)

Concrete modulus of elasticity	Ecmi=33 kN/mm² (transfer)
Concrete modulus of elasticity	Ecmb=35 kN/mm²

Composite section properties

Char strength (in-situ concrete)	fckc=24 N/mm²
Short-term modulus of elasticity for in-situ concrete	Ecmc=31 kN/mm²
Item weighting	iw1=0.88571
X co-ordinate	X(1)=0 mm
Y co-ordinate	Y(1)=0 mm
X co-ordinate	X(2)=765 mm
Y co-ordinate	Y(2)=0 mm
X co-ordinate	X(3)=765 mm
Y co-ordinate	Y(3)=250 mm
X co-ordinate	X(4)=915 mm
Y co-ordinate	Y(4)=350 mm
X co-ordinate	X(5)=915 mm
Y co-ordinate	Y(5)=875 mm
X co-ordinate	X(6)=415 mm
Y co-ordinate	Y(6)=875 mm
X co-ordinate	X(7)=415 mm
Y co-ordinate	Y(7)=775 mm
X co-ordinate	X(8)=0 mm
Y co-ordinate	Y(8)=775 mm
X co-ordinate	X(9)=0 mm
Y co-ordinate	Y(9)=0 mm

Second moment of area	IXX2=12.563E9 mm⁴
Area of item	A2=272247 mm²
Centroid from X-X axis	YC2=272.94 mm
Item weighting	iw2=0.17647
Depth of composite section	di=775 mm
Nominal diameter	nomd=12 mm
Nominal tensile strength	nomt=1700 N/mm²
Nominal steel area	noma=100 mm²
Char breaking load (strand)	fpk=150 kN
Initial force per strand	ipf=100 kN
Modulus of elasticity (strand)	Ep=195 kN/mm²

Cross-section 1

Distance from mid-span of beam	csd(1)=2 m
Number of layers of strand	nls(1)=4
Height above soffit	ds(1)=60 mm
Number of strands	ns(1)=11
Height above soffit	ds(2)=100 mm
Number of strands	ns(2)=13
Height above soffit	ds(3)=140 mm
Number of strands	ns(3)=8
Height above soffit	ds(4)=650 mm
Number of strands	ns(4)=2
Bending moment from temp. loads	tlb(1)=80 kNm
Bending moment from other loads	olb(1)=50 kNm

Short Term Losses (BS EN 1992-1-1)

Relaxation at transfer (%) str=1

Summary

Loss	Loss of Force kN	% Loss
Relaxation	34	1
Elastic Shortening	325.36	9.5694
Transfer Total	359.36	10.569

Losses at Transfer

Initial force	3400 kN
Force at transfer	Pt=P0-loft=3040.6 kN

Loading	Stresses at Transfer N/mm²		
	Top of Beam	Bottom of Beam	Centroid of Strands
Prestress	-3.721	20.686	16.194
Self weight of Beam	4.8071	-3.0715	-1.6216
Temporary Loads	2.7194	-1.7376	-0.91737
Other Loads	1.6997	-1.086	-0.57336
Total	5.5052	14.791	13.082

Beam Concrete Stresses at Transfer

Stress Limitations (BS EN 1992-1-1, Clause 5.10.2.2)

Top of beam:
Compressive stress 5.5052 N/mm² is less than allowable stresses of 0.7*fcki=22.4 N/mm² and 0.6*fck=24 N/mm².
Bottom of beam:
Compressive stress 14.791 N/mm² is less than allowable stresses of 0.7*fcki=22.4 N/mm² and 0.6*fck=24 N/mm².

Long Term Losses (BS EN 1992-1-1, Clause 5.10.6(1))

Relaxation after transfer(%) slr(1)=1.5
Shrinkage per unit length sul(1)=0.3E-3
Creep coefficient φ(∞,to) crf=2

Summary

Loss	Loss of Force kN	% Loss
Relaxation	34	1
Elastic Shortening	325.36	9.5694
Transfer Total	359.36	10.569
Relaxation	51	1.5
Shrinkage	198.9	5.85
Creep	586.03	17.236
Long-term Total	835.93	24.586
All Losses	1195.3	35.156

Losses - Long term

Initial force 3400 kN
Final force Pf=P0-loftl=2204.7 kN

Unit-weight of in-situ concrete wc=25 kN/m³

Loading	Final Stresses N/mm²		
	Top of Beam	Bottom of Beam	Centroid of Strands
Prestress	-2.698	14.999	11.742
Self weight of Beam	4.8071	-3.0715	-1.6216
In-situ concrete	7.8038	-4.9863	-2.6325
Total	9.9128	6.9413	7.4882

Beam concrete stresses - Long term

Composite section

Height from beam soffit to
bottom of in-situ concrete hsis=135 mm
Perc'age of shrinkage remaining ps=40 %
Percentage pcr=40
Percentage stT=50 %
The net moment is Mc=F*e/1E3-Mb=-206.13 kNm
Stress at top of in-situ concrete:
ftisds=-(F/(Ai*mr)-F/(Ai*mr+Ac)-Mc*1E3*(di-Yc)/Ic)*mr*1E3
=0.061653 N/mm²
Stress at bottom of in-situ concrete:
fbisds=-(F/(Ai*mr)-F/(Ai*mr+Ac)-Mc*1E3*(hsis-Yc)/Ic)*mr*1E3
=3.0225 N/mm²
Stress at top of precast concrete beam:
ftpbds=(F/(Ai*mr+Ac)+Mc*1E3*(d-Yc)/Ic+Mb*1E3*Yt/Iyy)*1E3
=-4.0271 N/mm²
Stress at bottom of precast concrete beam:
fbpbds=(F/(Ai*mr+Ac)-Mc*1E3*Yc/Ic-Mb*1E3*Yb/Iyy)*1E3=-0.66568 N/mm²

Loading Combination 1

No tensile stress permitted in precast beam.
Characteristic bending moment c1b(1)=550 kNm

Loading	Loading Combination 1 Stresses N/mm²			
	Top of in-situ	Top of Beam	Bottom of in-situ	Bottom of Beam
Prestress,beam and in-situ	0	9.9128	0	6.9413
Dif. shrinkage	0.061653	-4.0271	3.0225	-0.66568
Combination 1	4.7575	4.2311	-3.5392	-5.8773
Total	4.8191	10.117	-0.51667	0.39831

Loading Combination 1 - Stresses

Loading Combination 2

Tensile stress permitted (no visible cracking).
Characteristic bending moment c2b(1)=625 kNm

Loading	Loading Combination 2 Stresses N/mm²			
	Top of in-situ	Top of Beam	Bottom of in-situ	Bottom of Beam
Prestress,beam and in-situ	0	9.9128	0	6.9413
Dif. shrinkage	0.061653	-4.0271	3.0225	-0.66568
Combination 2	4.9557	4.4074	-4.0218	-6.6788
Total	5.0174	10.293	-0.99928	-0.40314

Loading Combination 2 - Stresses

NOTE: The stresses from temperature differences should be added to the total stresses.

Top of in-situ concrete:
Compressive stress 5.0174 N/mm² is less than the maximum allowable stress of 0.6*fckc=14.4 N/mm².
Top of beam:
Compressive stress 10.293 N/mm² is less than the maximum allowable stress of 0.6*fck=24 N/mm².

Bottom of in-situ concrete:
Tensile stress 0.99928 N/mm² is less than the maximum allowable tensile stress of 2.4956 N/mm² (EN 1992-1-1 expression 3.23).
Bottom of beam:
Tensile stress 0.40314 N/mm² is less than the maximum allowable tensile stress of 3.0263 N/mm².

Location: Ex3 - 15.0 metre span TY9 beam

Precast prestressed concrete TY beams with in-fill concrete

Calculations for stresses at the Serviceability Limit State (SLS) in accordance with BS EN 1992-2:2005 and NA to BS EN 1992-2:2005.

Span of beam span=15 m

Beam TY 9 section properties

Depth of beam d=800 mm
Cross-sectional area Ac=308163 mm²
Centroid above soffit Yb=328.6 mm
Section modulus top Zt=42.11E6 mm³
Section modulus bottom Zb=60.4E6 mm³
Unit weight of beam uwb=25 kN/m³

Concrete compressive strengths

Characteristic cylinder strength fcki=28 N/mm² (transfer)
Characteristic cylinder strength fck=32 N/mm²

Concrete moduli (short-term)

Concrete modulus of elasticity Ecmi=32 kN/mm² (transfer)
Concrete modulus of elasticity Ecmb=33 kN/mm²

Composite section properties

Char strength (in-situ concrete) fckc=28 N/mm²
Short-term modulus of elasticity
for in-situ concrete Ecmc=32 kN/mm²

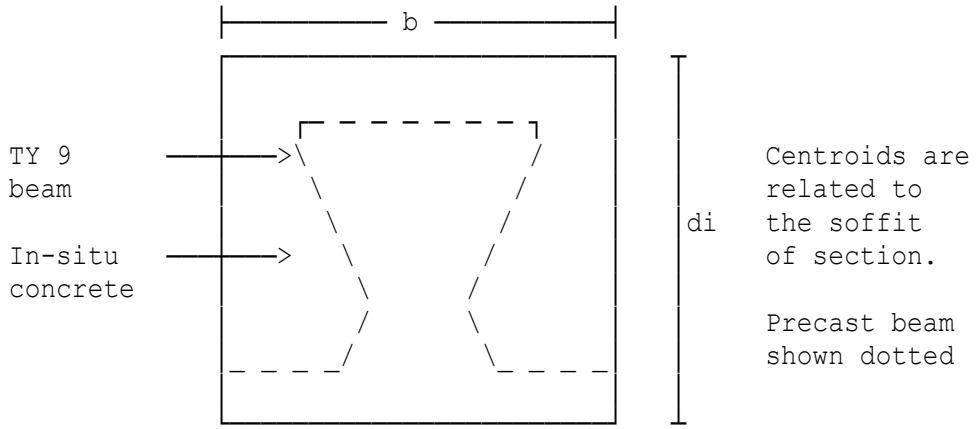

Breadth of rectangular section b=765 mm
Depth of rectangular section di=875 mm
Second moment of area Ic=Iyy+Ac*(Yb-Yc)^2+mr*(Ii+Ai*(Yi -Yc)^2)=42.708E9 mm⁴
Modulus of elasticity (strand) Ep=195 kN/mm²

Cross-section 1

Distance from mid-span of beam csd(1)=6 m
Number of layers of strand nls(1)=6
Height above soffit ds(1)=60 mm
Number of strands ns(1)=9
Height above soffit ds(2)=100 mm
Number of strands ns(2)=9
Height above soffit ds(3)=140 mm
Number of strands ns(3)=5
Height above soffit ds(4)=650 mm
Number of strands ns(4)=2
Height above soffit ds(5)=700 mm
Number of strands ns(5)=2
Height above soffit ds(6)=750 mm
Number of strands ns(6)=2

Short Term Losses (BS EN 1992-1-1)

Relaxation at transfer (%) str=1

Summary

Loss	Loss of Force kN	% Loss
Relaxation	37.7	1
Elastic Shortening	238.01	6.3134
Transfer Total	275.71	7.3134

Losses at Transfer

Initial force 3770 kN
Force at transfer Pt=P0-loft=3494.3 kN

Loading	Stresses at Transfer N/mm²		
	Top of Beam	Bottom of Beam	Centroid of Strands
Prestress	2.2115	17.702	13.469
Self weight of Beam	1.8527	-1.2915	-0.43224
Total	4.0642	16.41	13.036

Beam Concrete Stresses at Transfer

Stress Limitations (BS EN 1992-1-1, Clause 5.10.2.2)

Top of beam:
Compressive stress 4.0642 N/mm² is less than allowable stresses of 0.7*fcki=19.6 N/mm² and 0.6*fck=19.2 N/mm².

Bottom of beam:
Compressive stress 16.41 N/mm² is less than allowable stresses of 0.7*fcki=19.6 N/mm² and 0.6*fck=19.2 N/mm².

Long Term Losses (BS EN 1992-1-1, Clause 5.10.6(1))

Relaxation after transfer(%) slr(1)=2
Shrinkage per unit length sul(1)=0.3E-3
Creep coefficient φ(∞,to) crf=2

Summary

Loss	Loss of Force kN	% Loss
Relaxation Elastic Shortening	37.7 238.01	1 6.3134
Transfer Total	275.71	7.3134
Relaxation Shrinkage Creep	75.4 169.65 547.96	2 4.5 14.535
Long-term Total	793.01	21.035
All Losses	1068.7	28.348

Losses - Long term

Initial force 3770 kN
Final force Pf=P0-loftl=2701.3 kN

Unit-weight of in-situ concrete wc=25 kN/m³

Loading	Final Stresses N/mm²		
	Top of Beam	Bottom of Beam	Centroid of Strands
Prestress Self weight of Beam In-situ concrete	1.7096 1.8527 2.1716	13.684 -1.2915 -1.5138	10.412 -0.43224 -0.50664
Total	5.7339	10.879	9.4731

Beam concrete stresses - Long term

Height from beam soffit to
bottom of in-situ concrete hsis=135 mm

Loading Combination 1

No tensile stress permitted in precast beam.
Characteristic bending moment c1b(1)=200 kNm

Loading	Loading Combination 1 Stresses N/mm²			
	Top of in-situ	Top of Beam	Bottom of in-situ	Bottom of Beam
Prestress,beam and in-situ	0	5.7339	0	10.879
Combination 1	2.3049	1.9098	-1.4166	-2.0488
Total	2.3049	7.6437	-1.4166	8.8303

Loading Combination 1 - Stresses

Loading Combination 2

Tensile stress permitted (no visible cracking).
Characteristic bending moment c2b(1)=250 kNm

Loading	Loading Combination 2 Stresses N/mm²			
	Top of in-situ	Top of Beam	Bottom of in-situ	Bottom of Beam
Prestress,beam and in-situ	0	5.7339	0	10.879
Combination 2	2.561	2.122	-1.7708	-2.561
Total	2.561	7.8559	-1.7708	8.3181

Loading Combination 2 - Stresses

NOTE: The stresses from temperature differences should be added to the total stresses.

Top of in-situ concrete:
Compressive stress 2.561 N/mm² is less than the maximum allowable stress of 0.6*fckc=16.8 N/mm².
Top of beam:
Compressive stress 7.8559 N/mm² is less than the maximum allowable stress of 0.6*fck=19.2 N/mm².

Bottom of in-situ concrete:
Tensile stress 1.7708 N/mm² is less than the maximum allowable tensile stress of 2.7656 N/mm² (EN 1992-1-1 expression 3.23).
Bottom of beam:
Compressive stress 8.3181 N/mm² is less than the maximum allowable stress of 0.6*fck=19.2 N/mm².

Location: 16 metre span TY10 beam with in-situ slab

Precast prestressed concrete TY beams with in-situ top slab

Calculations for stresses at the Serviceability Limit State (SLS) to BS5400-4:1990 implemented by DOT Departmental Standard BD 44/15.

Span of beam span=16 m

Beam TY 10 section properties

Depth of beam d=850 mm
Cross-sectional area Ac=323206 mm²
Centroid above soffit Yb=351.52 mm
Section modulus top Zt=46.9E6 mm³
Section modulus bottom Zb=66.47E6 mm³
Unit weight of beam uwb=24 kN/m³

Concrete strengths

Strength at transfer fci=40 N/mm²
Characteristic strength fcu=50 N/mm²

Concrete moduli

Modulus of elasticity at transfer for concrete strength 40 N/mm² is:
Eci=31 kN/mm²
Modulus of elasticity for concrete strength 50 N/mm² is:
Ecb=34 kN/mm²

Composite section properties

Char strength of in-situ concrete fcuc=40 N/mm²
Modulus of elasticity for concrete strength 40 N/mm² is:
Ecc=31 kN/mm²

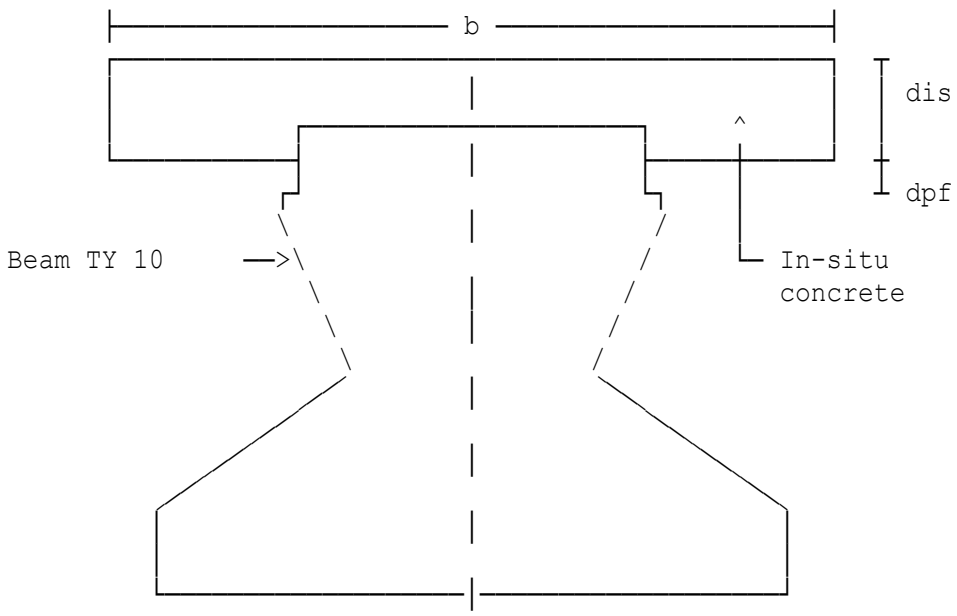

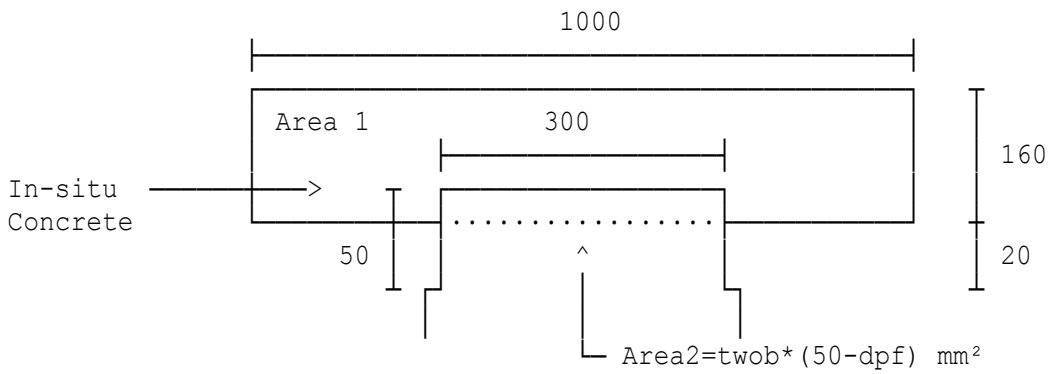

Second moment of area	Ic=Ixx+Ac*(Yb-Yc)^2+mr*(Ii+Ai*(Yi -Yc)^2)=55.066E9 mm⁴
Depth of composite section	di=980 mm
Initial force	if=123 kN
Modulus of elasticity	Es=200 kN/mm²

Cross-section 1

Distance from mid-span of beam	csd(1)=0 m
Number of layers of strand	nls(1)=4
Height above soffit	ds(1)=60 mm
Number of strands	ns(1)=11
Height above soffit	ds(2)=100 mm
Number of strands	ns(2)=13
Height above soffit	ds(3)=140 mm
Number of strands	ns(3)=7
Height above soffit	ds(4)=800 mm
Number of strands	ns(4)=2

Short Term Losses

Relaxation at transfer (%)	str=1

Summary

Loss	Loss of Force kN	% Loss
Relaxation	40.59	1
Elastic Shortening	402.04	9.9048
Transfer Total	442.63	10.905

Losses at Transfer

Initial force	4059 kN
Force at transfer	Pt=P0-loft=3616.4 kN

Loading	Stresses at Transfer N/mm²		
	Top of Beam	Bottom of Beam	Centroid of Strands
Prestress Self weight of Beam	-5.3171 5.2956	22.829 -3.7343	18.273 -2.2728
Total	-0.021518	19.095	16.001

Beam Concrete Stresses at Transfer

Stress Limitations

Top of beam:
The flexural tensile stress of 0.021518 N/mm² at transfer is less than the permissible value of 1 N/mm² (Clause 6.3.2.4(b)(1)).
Bottom of beam:
Compressive stress 19.095 N/mm² is less than allowable stresses of 0.5*fci=20 N/mm² and 0.4*fcu=20 N/mm².

Long Term Losses

Relaxation after transfer(%) slr(1)=2
Shrinkage per unit length sul(1)=0.3E-3

Summary

Loss	Loss of Force kN	% Loss
Relaxation Elastic Shortening	40.59 402.04	1 9.9048
Transfer Total	442.63	10.905
Relaxation Shrinkage Creep	81.18 184.14 573.26	2 4.5366 14.123
Long-term Total	838.58	20.66
All Losses	1281.2	31.565

Losses - Long term

Initial force 4059 kN
Final force Pf=P0-loftl=2777.8 kN

Unit-weight of in-situ concrete wc=24 kN/m³

Loading	Final Stresses N/mm²		
	Top of Beam	Bottom of Beam	Centroid of Strands
Prestress	-4.0841	17.535	14.036
Self weight of Beam	5.2956	-3.7343	-2.2728
In-situ concrete	2.4741	-1.7447	-1.0618
Total	3.6855	12.056	10.701

Beam concrete stresses - Long term

Composite section

Height from beam soffit to
bottom of in-situ concrete hsis=820 mm
Perc'age of shrinkage remaining ps=25 %
Percentage pcr=25 %
Percentage stT=67 %
The net moment is Mc=F*e/1E3-Mb=-145.46 kNm
Stress at top of in-situ concrete:
ftisds=-(F/(Ai*mr)-F/(Ai*mr+Ac)-Mc*1E3*(di-Yc)/Ic)*mr*1E3
=-0.94879 N/mm²
Stress at bottom of in-situ concrete:
fbisds=-(F/(Ai*mr)-F/(Ai*mr+Ac)-Mc*1E3*(hsis-Yc)/Ic)*mr*1E3
=-0.52613 N/mm²
Stress at top of precast concrete beam:
ftpbds=(F/(Ai*mr+Ac)+Mc*1E3*(d-Yc)/Ic+Mb*1E3*Yt/Ixx)*1E3=1.6967 N/mm²
Stress at bottom of precast concrete beam:
fbpbds=(F/(Ai*mr+Ac)-Mc*1E3*Yc/Ic-Mb*1E3*Yb/Ixx)*1E3=-0.60081 N/mm²

Combination 1 loading

Applied bending moment c1b(1)=900 kNm

Loading	Combination 1 Stresses N/mm²			
	Top of in-situ	Top of Beam	Bottom of in-situ	Bottom of Beam
Prestress,beam and in-situ	0	3.6855	0	12.056
Dif. shrinkage	-0.94879	1.6967	-0.52613	-0.60081
Combination 1	9.0411	6.4442	5.8449	-8.62
Total	8.0923	11.826	5.3188	2.8354

Combination 1 Loading - Stresses

Combination 2 to 5 loading

Applied bending moment c2b(1)=1200 kNm

Loading	Combination 2 to 5 Stresses N/mm²			
	Top of in-situ	Top of Beam	Bottom of in-situ	Bottom of Beam
Prestress,beam and in-situ	0	3.6855	0	12.056
Dif. shrinkage	-0.94879	1.6967	-0.52613	-0.60081
Combination 2-5	9.8631	7.0301	6.3763	-11.493
Total	8.9143	12.412	5.8502	-0.037895

Combination 2 to 5 Loading - Stresses

Combination 3 loading. The stresses from the Proforma for temperature differences should be added to the total stresses.
Top of in-situ concrete:
Compressive stress 8.9143 N/mm² is less than the maximum allowable stress of 0.5*fcuc=20 N/mm².
Top of beam:
Compressive stress 12.412 N/mm² is less than the maximum allowable stress of 0.4*fcu=20 N/mm².
Bottom of in-situ concrete:
Compressive stress 5.8502 N/mm² is less than the maximum allowable stress of 0.5*fcuc=20 N/mm².
Bottom of beam:
Tensile stress 0.037895 N/mm² is less than the maximum allowable tensile stress of 3.182 N/mm².

Copyright 1986-2024 Fitzroy Systems Ltd.

Location: 12.5 metre span TY6 beam with in-situ top slab

Precast prestressed concrete TY beams with in-situ top slab

Calculations for stresses at the Serviceability Limit State (SLS) to BS5400-4:1990 implemented by DOT Departmental Standard BD 44/15.

Span of beam span=12.5 m

Beam TY 6 section properties

Depth of beam d=650 mm
Cross-sectional area Ac=251341 mm²
Centroid above soffit Yb=240.07 mm
Section modulus top Zt=22.13E6 mm³
Section modulus bottom Zb=37.75E6 mm³
Unit weight of beam uwb=24.5 kN/m³

Concrete strengths

Strength at transfer fci=40 N/mm²
Characteristic strength fcu=52.5 N/mm²

Concrete moduli

Modulus of elasticity at transfer for concrete strength 40 N/mm² is:
Eci=31 kN/mm²
Modulus of elasticity for concrete strength 52.5 N/mm² is:
Ecb=34.5 kN/mm²

Composite section properties

Char strength of in-situ concrete fcuc=40 N/mm²
Modulus of elasticity for concrete strength 40 N/mm² is:
Ecc=31 kN/mm²
Item weighting iw1=0.89855
X co-ordinate X(1)=125 mm
Y co-ordinate Y(1)=0 mm
X co-ordinate X(2)=875 mm
Y co-ordinate Y(2)=0 mm
X co-ordinate X(3)=875 mm
Y co-ordinate Y(3)=135 mm
X co-ordinate X(4)=1007 mm
Y co-ordinate Y(4)=400 mm
X co-ordinate X(5)=1207 mm
Y co-ordinate Y(5)=400 mm
X co-ordinate X(6)=1207 mm
Y co-ordinate Y(6)=900 mm
X co-ordinate X(7)=707 mm
Y co-ordinate Y(7)=880 mm
X co-ordinate X(8)=707 mm
Y co-ordinate Y(8)=780 mm
X co-ordinate X(9)=0 mm
Y co-ordinate Y(9)=780 mm

X co-ordinate	X(10)=0 mm
Y co-ordinate	Y(10)=620 mm
X co-ordinate	X(11)=391.5 mm
Y co-ordinate	Y(11)=620 mm
X co-ordinate	X(12)=391.5 mm
Y co-ordinate	Y(12)=600 mm
X co-ordinate	X(13)=351.5 mm
Y co-ordinate	Y(13)=600 mm
X co-ordinate	X(14)=407.5 mm
Y co-ordinate	Y(14)=320 mm
X co-ordinate	X(15)=357.5 mm
Y co-ordinate	Y(15)=240 mm
X co-ordinate	X(16)=130 mm
Y co-ordinate	Y(16)=135 mm
X co-ordinate	X(17)=125 mm
Y co-ordinate	Y(17)=0 mm

Second moment of area	IXX2=9.0626E9 mm^4
Area of item	A2=251341 mm^2
Centroid from X-X axis	YC2=240.07 mm
Item weighting	iw2=0.10145
Depth of composite section	di=900 mm
Initial force	if=146 kN
Modulus of elasticity	Es=200 kN/mm^2

Cross-section 1

Distance from mid-span of beam	csd(1)=3.25 m
Number of layers of strand	nls(1)=4
Height above soffit	ds(1)=60 mm
Number of strands	ns(1)=10
Height above soffit	ds(2)=100 mm
Number of strands	ns(2)=8
Height above soffit	ds(3)=140 mm
Number of strands	ns(3)=3
Height above soffit	ds(4)=600 mm
Number of strands	ns(4)=2

Short Term Losses

Relaxation at transfer (%)	str=1.5

Summary

Loss	Loss of Force kN	% Loss
Relaxation Elastic Shortening	50.37 290.47	1.5 8.65
Transfer Total	340.84	10.15

Losses at Transfer

Initial force 3358 kN
Force at transfer Pt=P0-loft=3017.2 kN

Loading	Stresses at Transfer N/mm²		
	Top of Beam	Bottom of Beam	Centroid of Strands
Prestress Self weight of Beam	-2.8396 3.9692	20.697 -2.3245	15.943 -1.0531
Total	1.1296	18.373	14.89

Beam Concrete Stresses at Transfer

Stress Limitations

Top of beam:
Compressive stress 1.1296 N/mm² is less than allowable stresses of 0.5*fci=20 N/mm² and 0.4*fcu=21 N/mm².
Bottom of beam:
Compressive stress 18.373 N/mm² is less than allowable stresses of 0.5*fci=20 N/mm² and 0.4*fcu=21 N/mm².

Long Term Losses

Relaxation after transfer(%) slr(1)=1
Shrinkage per unit length sul(1)=0.3E-3

Summary

Loss	Loss of Force kN	% Loss
Relaxation Elastic Shortening	50.37 290.47	1.5 8.65
Transfer Total	340.84	10.15
Relaxation Shrinkage Creep	33.58 154.56 437.8	1 4.6027 13.038
Long-term Total	625.94	18.64
All Losses	966.78	28.79

Losses - Long term

Initial force 3358 kN
Final force Pf=P0-loftl=2391.2 kN

Unit-weight of in-situ concrete wc=24 kN/m³

Loading	Final Stresses N/mm²		
	Top of Beam	Bottom of Beam	Centroid of Strands
Prestress Self weight of Beam In-situ concrete	-2.2505 3.9692 6.8424	16.403 -2.3245 -4.0072	12.635 -1.0531 -1.8155
Total	8.5611	10.072	9.7666

Beam concrete stresses - Long term

Composite section

Height from beam soffit to
bottom of in-situ concrete hsis=135 mm
Perc'age of shrinkage remaining ps=45 %
Percentage pcr=45 %
Percentage stT=60 %
The net moment is Mc=F*e/1E3-Mb=-327.91 kNm
Stress at top of in-situ concrete:
ftisds=-(F/(Ai*mr)-F/(Ai*mr+Ac)-Mc*1E3*(di-Yc)/Ic)*mr*1E3
=-1.3111 N/mm²
Stress at bottom of in-situ concrete:
fbisds=-(F/(Ai*mr)-F/(Ai*mr+Ac)-Mc*1E3*(hsis-Yc)/Ic)*mr*1E3
=4.1552 N/mm²
Stress at top of precast concrete beam:

ftpbds=(F/(Ai*mr+Ac)+Mc*1E3*(d-Yc)/Ic+Mb*1E3*Yt/Ixx)*1E3
=-3.0921 N/mm²

Stress at bottom of precast concrete beam:
fbpbds=(F/(Ai*mr+Ac)-Mc*1E3*Yc/Ic-Mb*1E3*Yb/Ixx)*1E3=-0.59322 N/mm²

Combination 1 loading

Applied bending moment c1b(1)=400 kNm

Loading	Combination 1 Stresses N/mm²			
	Top of in-situ	Top of Beam	Bottom of in-situ	Bottom of Beam
Prestress,beam and in-situ	0	8.5611	0	10.072
Dif. shrinkage	-1.3111	-3.0921	4.1552	-0.59322
Combination 1	4.3336	2.0945	-2.8161	-4.4436
Total	3.0225	7.5636	1.3391	5.0349

Combination 1 Loading - Stresses

Combination 2 to 5 loading

Applied bending moment c2b(1)=500 kNm

Loading	Combination 2 to 5 Stresses N/mm²			
	Top of in-situ	Top of Beam	Bottom of in-situ	Bottom of Beam
Prestress,beam and in-situ	0	8.5611	0	10.072
Dif. shrinkage	-1.3111	-3.0921	4.1552	-0.59322
Combination 2-5	4.8151	2.3273	-3.5201	-5.5546
Total	3.504	7.7963	0.63508	3.924

Combination 2 to 5 Loading - Stresses

Combination 3 loading. The stresses from the Proforma for temperature differences should be added to the total stresses.
Top of in-situ concrete:
Compressive stress 3.504 N/mm² is less than the maximum allowable stress of 0.5*fcuc=20 N/mm².
Top of beam:
Compressive stress 7.7963 N/mm² is less than the maximum allowable stress of 0.4*fcu=21 N/mm².
Bottom of in-situ concrete:
Compressive stress 0.63508 N/mm² is less than the maximum allowable stress of 0.5*fcuc=20 N/mm².

Bottom of beam:
Compressive stress 3.924 N/mm² is less than the maximum allowable stress of 0.4*fcu=21 N/mm².

Location: 8 metre span TY4 beam with in-situ top slab

Precast prestressed concrete TY beams with in-situ top slab

Calculations for stresses at the Serviceability Limit State (SLS) to BS5400-4:1990 implemented by DOT Departmental Standard BD 44/15.

Span of beam span=8 m

Beam TY 4 section properties

Depth of beam	d=550 mm
Cross-sectional area	Ac=221426 mm²
Centroid above soffit	Yb=193.45 mm
Section modulus top	Zt=13.95E6 mm³
Section modulus bottom	Zb=25.68E6 mm³
Unit weight of beam	uwb=24.5 kN/m³

Concrete strengths

Strength at transfer	fci=37.5 N/mm²
Characteristic strength	fcu=45 N/mm²

Concrete moduli

Modulus of elasticity at transfer for concrete strength 37.5 N/mm² is:
Eci=30.25 kN/mm²
Modulus of elasticity for concrete strength 45 N/mm² is:
Ecb=32.5 kN/mm²

Composite section properties

Char strength of in-situ concrete fcuc=30 N/mm²
Modulus of elasticity for concrete strength 30 N/mm² is:
Ecc=28 kN/mm²

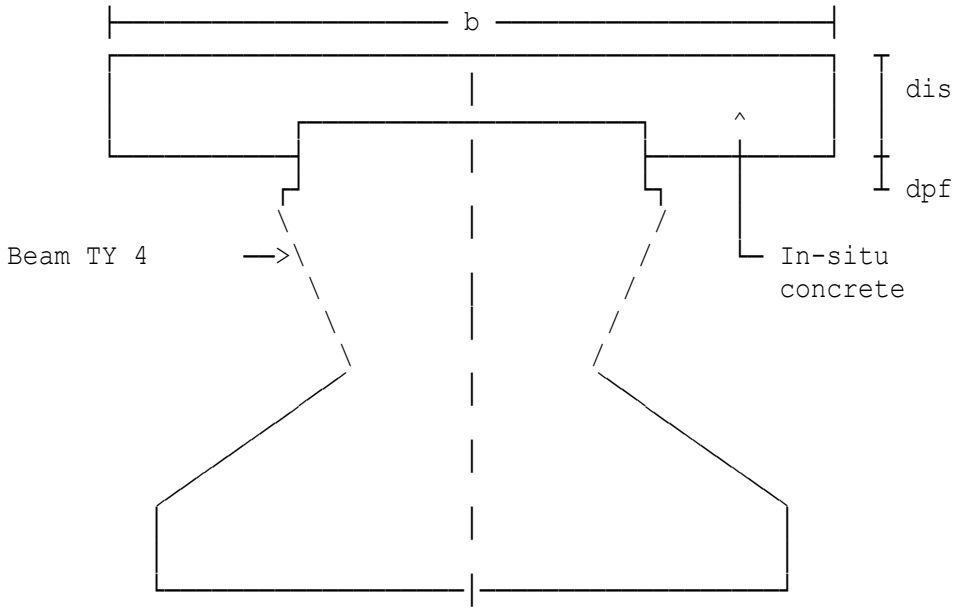

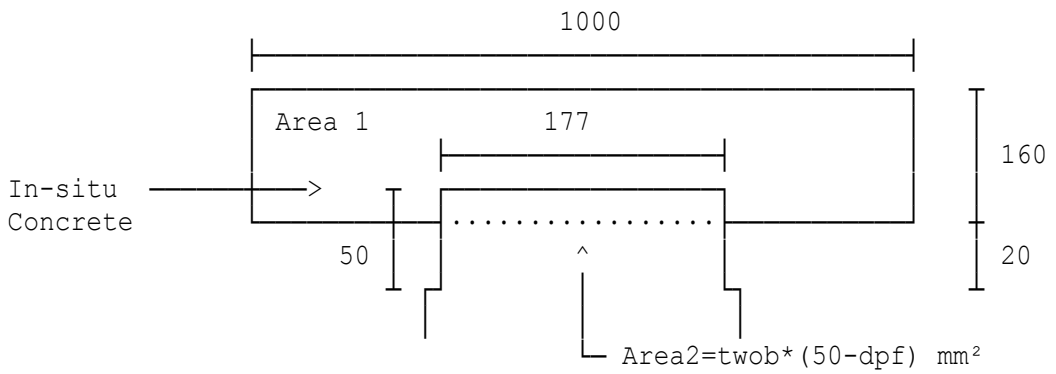

Transf'med second moment of area	Ic=Ixx+Ac*(Yb-Yc)^2+mr*(Ii+Ai*(Yi -Yc)^2)=19.144E9 mm⁴
Depth of composite section	di=680 mm
Nominal diameter	nomd=12 mm
Nominal tensile strength	nomt=1600 N/mm²
Nominal steel area	noma=90 mm²
Characteristic breaking load	cbl=160 kN
Initial force per strand	if=100 kN
Modulus of elasticity	Es=200 kN/mm²

Cross-section 1

Distance from mid-span of beam	csd(1)=2.5 m
Number of layers of strand	nls(1)=3
Height above soffit	ds(1)=60 mm
Number of strands	ns(1)=8
Height above soffit	ds(2)=100 mm
Number of strands	ns(2)=12
Height above soffit	ds(3)=180 mm
Number of strands	ns(3)=3
Bending moment from temp.loads	tlb(1)=100 kNm
Bending moment from other loads	olb(1)=150 kNm

Short Term Losses

Relaxation at transfer (%)	str=1

Summary

Loss	Loss of Force kN	% Loss
Relaxation	23	1
Elastic Shortening	199.67	8.6814
Transfer Total	222.67	9.6814

Losses at Transfer

Initial force	2300 kN
Force at transfer	Pt=P0-loft=2077.3 kN

Loading	Stresses at Transfer N/mm²		
	Top of Beam	Bottom of Beam	Centroid of Strands
Prestress	-5.0699	17.222	13.31
Self weight of Beam	1.8981	-1.0299	-0.51601
Temporary Loads	7.1772	-3.8941	-1.9511
Other Loads	10.766	-5.8411	-2.9267
Total	14.771	6.4573	7.9164

Beam Concrete Stresses at Transfer

Stress Limitations

Top of beam:
Compressive stress 14.771 N/mm² is less than allowable stresses of 0.5*fci=18.75 N/mm² and 0.4*fcu=18 N/mm².
Bottom of beam:
Compressive stress 6.4573 N/mm² is less than allowable stresses of 0.5*fci=18.75 N/mm² and 0.4*fcu=18 N/mm².

Long Term Losses

Relaxation after transfer(%) slr(1)=0.8
Shrinkage per unit length sul(1)=0.3E-3

Summary

Loss	Loss of Force kN	% Loss
Relaxation	23	1
Elastic Shortening	199.67	8.6814
Transfer Total	222.67	9.6814
Relaxation	18.4	0.8
Shrinkage	124.2	5.4
Creep	209.16	9.0939
Long-term Total	351.76	15.294
All Losses	574.43	24.975

Losses - Long term

Initial force 2300 kN
Final force Pf=P0-loftl=1725.6 kN

Unit-weight of in-situ concrete wc=24 kN/m³

Loading	Final Stresses N/mm²		
	Top of Beam	Bottom of Beam	Centroid of Strands
Prestress	-4.2114	14.306	11.056
Self weight of Beam	1.8981	-1.0299	-0.51601
In-situ concrete	1.299	-0.70478	-0.35313
Total	-1.0143	12.571	10.187

Beam concrete stresses - Long term

Composite section

Height from beam soffit to
bottom of in-situ concrete hsis=520 mm
Perc'age of shrinkage remaining ps=50 %
Percentage pcr=50 %
Percentage stT=45 %
The net moment is Mc=F*e/1E3-Mb=-225.48 kNm
Stress at top of in-situ concrete:
ftisds=-(F/(Ai*mr)-F/(Ai*mr+Ac)-Mc*1E3*(di-Yc)/Ic)*mr*1E3
=-1.6713 N/mm²
Stress at bottom of in-situ concrete:
fbisds=-(F/(Ai*mr)-F/(Ai*mr+Ac)-Mc*1E3*(hsis-Yc)/Ic)*mr*1E3
=-0.047759 N/mm²
Stress at top of precast concrete beam:
ftpbds=(F/(Ai*mr+Ac)+Mc*1E3*(d-Yc)/Ic+Mb*1E3*Yt/Ixx)*1E3=4.8515 N/mm²
Stress at bottom of precast concrete beam:
fbpbds=(F/(Ai*mr+Ac)-Mc*1E3*Yc/Ic-Mb*1E3*Yb/Ixx)*1E3=-1.6816 N/mm²

Combination 1 loading

Applied bending moment c1b(1)=300 kNm

Loading	Combination 1 Stresses N/mm²			
	Top of in-situ	Top of Beam	Bottom of in-situ	Bottom of Beam
Prestress,beam and in-situ	0	-1.0143	0	12.571
Dif. shrinkage	-1.6713	4.8515	-0.047759	-1.6816
Combination 1	5.9937	4.2407	3.1135	-5.4384
Total	4.3223	8.0779	3.0657	5.4515

Combination 1 Loading - Stresses

Combination 2 to 5 loading

Applied bending moment c2b(1)=500 kNm

Loading	Combination 2 to 5 Stresses N/mm²			
	Top of in-situ	Top of Beam	Bottom of in-situ	Bottom of Beam
Prestress,beam and in-situ	0	-1.0143	0	12.571
Dif. shrinkage	-1.6713	4.8515	-0.047759	-1.6816
Combination 2-5	7.4921	5.3008	3.8918	-9.064
Total	5.8207	9.1381	3.8441	1.8258

Combination 2 to 5 Loading - Stresses

Combination 3 loading. The stresses from the Proforma for temperature differences should be added to the total stresses.
Top of in-situ concrete:
Compressive stress 5.8207 N/mm² is less than the maximum allowable stress of 0.5*fcuc=15 N/mm².
Top of beam:
Compressive stress 9.1381 N/mm² is less than the maximum allowable stress of 0.4*fcu=18 N/mm².
Bottom of in-situ concrete:
Compressive stress 3.8441 N/mm² is less than the maximum allowable stress of 0.5*fcuc=15 N/mm².
Bottom of beam:
Compressive stress 1.8258 N/mm² is less than the maximum allowable stress of 0.4*fcu=18 N/mm².

Copyright 1986-2024 Fitzroy Systems Ltd.

Location: Ex1 - 16 metre span TY10 beam with in-situ slab

Precast prestressed concrete TY beams with in-situ top slab

Calculations for stresses at the Serviceability Limit State (SLS) in accordance with BS EN 1992-2:2005 and NA to BS EN 1992-2:2005.

Beam span under consideration span=16 m

Beam TY 10 section properties

Depth of beam	d=850 mm
Cross-sectional area	Ac=323206 mm²
Centroid above soffit	Yb=351.52 mm
Section modulus top	Zt=46.9E6 mm³
Section modulus bottom	Zb=66.47E6 mm³
Unit weight of beam	uwb=24 kN/m³

Concrete compressive strengths

Characteristic cylinder strength	fcki=32 N/mm² (transfer)
Characteristic cylinder strength	fck=40 N/mm²

Concrete moduli (short-term)

Concrete modulus of elasticity	Ecmi=33 kN/mm² (transfer)
Concrete modulus of elasticity	Ecmb=35 kN/mm²

Composite section properties

Char strength (in-situ concrete)	fckc=32 N/mm²
Short-term modulus of elasticity for in-situ concrete	Ecmc=33 kN/mm²

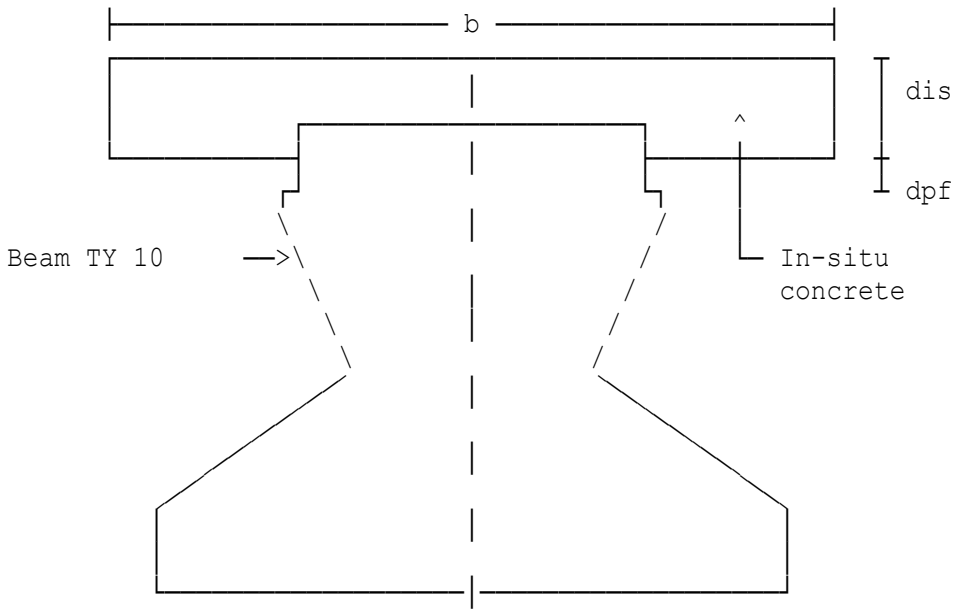

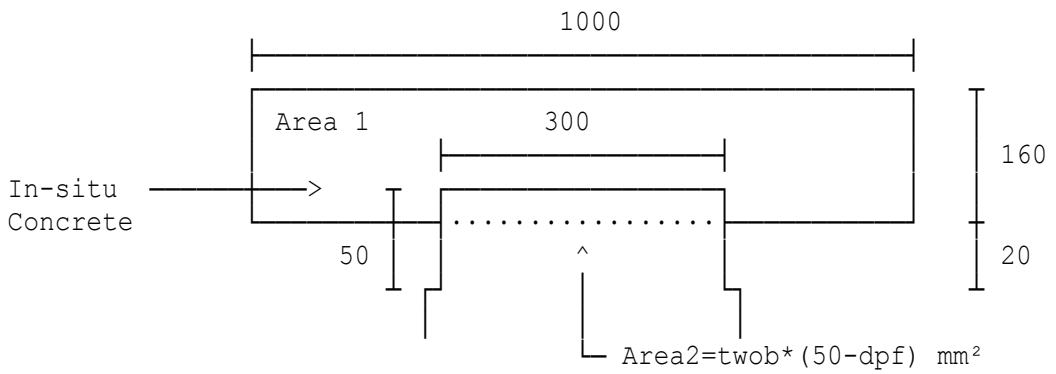

Second moment of area Ic=Iyy+Ac*(Yb-Yc)^2+mr*(Ii+Ai*(Yi -Yc)^2)=55.066E9 mm⁴
Depth of composite section di=980 mm
Modulus of elasticity (strand) Ep=195 kN/mm²

Cross-section 1

Distance from mid-span of beam csd(1)=0 m
Number of layers of strand nls(1)=4
Height above soffit ds(1)=60 mm
Number of strands ns(1)=11
Height above soffit ds(2)=100 mm
Number of strands ns(2)=13
Height above soffit ds(3)=140 mm
Number of strands ns(3)=7
Height above soffit ds(4)=800 mm
Number of strands ns(4)=2

Short Term Losses (BS EN 1992-1-1)

Relaxation at transfer (%) str=1

Summary

Loss	Loss of Force kN	% Loss
Relaxation	40.59	1
Elastic Shortening	337.32	8.3104
Transfer Total	377.91	9.3104

Losses at Transfer

Initial force 4059 kN
Force at transfer Pt=P0-loft=3681.1 kN

Loading	Stresses at Transfer N/mm²		
	Top of Beam	Bottom of Beam	Centroid of Strands
Prestress Self weight of Beam	-5.4122 5.2956	23.237 -3.7343	18.6 -2.2728
Total	-0.11667	19.503	16.328

Beam Concrete Stresses at Transfer

Stress Limitations (BS EN 1992-1-1, Clause 5.10.2.2)

Top of beam:
The flexural tensile stress of 0.11667 N/mm² at transfer is less than the permissible value of 1 N/mm² (as was permitted in BS5400-4).
Bottom of beam:
Compressive stress 19.503 N/mm² is less than allowable stresses of 0.7*fcki=22.4 N/mm² and 0.6*fck=24 N/mm².

Long Term Losses (BS EN 1992-1-1, Clause 5.10.6(1))

Relaxation after transfer(%) slr(1)=2
Shrinkage per unit length sul(1)=0.3E-3
Creep coefficient φ(∞,to) crf=2

Summary

Loss	Loss of Force kN	% Loss
Relaxation Elastic Shortening	40.59 337.32	1 8.3104
Transfer Total	377.91	9.3104
Relaxation Shrinkage Creep	81.18 179.54 709.26	2 4.4232 17.474
Long-term Total	969.97	23.897
All Losses	1347.9	33.207

Losses - Long term

Initial force 4059 kN
Final force Pf=P0-loftl=2711.1 kN

Unit-weight of in-situ concrete wc=24 kN/m³

Loading	Final Stresses N/mm²		
	Top of Beam	Bottom of Beam	Centroid of Strands
Prestress	-3.9861	17.114	13.699
Self weight of Beam	5.2956	-3.7343	-2.2728
In-situ concrete	2.4741	-1.7447	-1.0618
Total	3.7835	11.635	10.365

Beam concrete stresses - Long term

Composite section

Height from beam soffit to
bottom of in-situ concrete hsis=820 mm
Perc'age of shrinkage remaining ps=25 %
Percentage pcr=25 %
Percentage stT=67 %
The net moment is Mc=F*e/1E3-Mb=-226.88 kNm
Stress at top of in-situ concrete:
ftisds=-(F/(Ai*mr)-F/(Ai*mr+Ac)-Mc*1E3*(di-Yc)/Ic)*mr*1E3
=-1.0282 N/mm²
Stress at bottom of in-situ concrete:
fbisds=-(F/(Ai*mr)-F/(Ai*mr+Ac)-Mc*1E3*(hsis-Yc)/Ic)*mr*1E3
=-0.36893 N/mm²
Stress at top of precast concrete beam:
ftpbds=(F/(Ai*mr+Ac)+Mc*1E3*(d-Yc)/Ic+Mb*1E3*Yt/Iyy)*1E3
=1.6316 N/mm²
Stress at bottom of precast concrete beam:
fbpbds=(F/(Ai*mr+Ac)-Mc*1E3*Yc/Ic-Mb*1E3*Yb/Iyy)*1E3
=-0.58136 N/mm²

Loading Combination 1

(no tensile stress permitted in precast beam)
Characteristic bending moment c1b(1)=900 kNm

Loading	Loading Combination 1 Stresses N/mm²			
	Top of in-situ	Top of Beam	Bottom of in-situ	Bottom of Beam
Prestress,beam and in-situ	0	3.7835	0	11.635
Dif. shrinkage	-1.0282	1.6316	-0.36893	-0.58136
Combination 1	9.0411	6.4442	5.8449	-8.62
Total	8.013	11.859	5.476	2.434

Loading Combination 1 - Stresses

Loading Combination 2

(tensile stress permitted (no visible cracking))
Characteristic bending moment c2b(1)=1200 kNm

Loading	Loading Combination 2 Stresses N/mm²			
	Top of in-situ	Top of Beam	Bottom of in-situ	Bottom of Beam
Prestress,beam and in-situ	0	3.7835	0	11.635
Dif. shrinkage	-1.0282	1.6316	-0.36893	-0.58136
Combination 2	9.8631	7.0301	6.3763	-11.493
Total	8.8349	12.445	6.0074	-0.43931

Loading Combination 2 - Stress

NOTE: The stresses from temperature differences should be added to the total stresses.

Top of in-situ concrete:
Compressive stress 8.8349 N/mm² is less than the maximum allowable stress of 0.6*fckc=19.2 N/mm².
Top of beam:
Compressive stress 12.445 N/mm² is less than the maximum allowable stress of 0.6*fck=24 N/mm².
Bottom of in-situ concrete:
Compressive stress 6.0074 N/mm² is less than the maximum allowable stress of 0.6*fckc=19.2 N/mm².
Bottom of beam:
Tensile stress 0.43931 N/mm² is less than the maximum allowable tensile stress of 3.0263 N/mm².

Copyright 1986-2024 Fitzroy Systems Ltd.

Location: Ex2 - 12.5 metre span TY6 beam with in-situ top slab

Precast prestressed concrete TY beams with in-situ top slab

Calculations for stresses at the Serviceability Limit State (SLS) in accordance with BS EN 1992-2:2005 and NA to BS EN 1992-2:2005.

Beam span under consideration span=12.5 m

Beam TY 6 section properties

Depth of beam	d=650 mm
Cross-sectional area	Ac=251341 mm²
Centroid above soffit	Yb=240.07 mm
Section modulus top	Zt=22.13E6 mm³
Section modulus bottom	Zb=37.75E6 mm³
Unit weight of beam	uwb=24.5 kN/m³

Concrete compressive strengths

Characteristic cylinder strength	fcki=32 N/mm² (transfer)
Characteristic cylinder strength	fck=42 N/mm²

Concrete moduli (short-term)

Concrete modulus of elasticity	Ecmi=34 kN/mm² (transfer)
Concrete modulus of elasticity	Ecmb=36 kN/mm²

Composite section properties

Char strength (in-situ concrete)	fckc=32 N/mm²
Short-term modulus of elasticity for in-situ concrete	Ecmc=33 kN/mm²
X co-ordinate	X(1)=125 mm
Y co-ordinate	Y(1)=0 mm
X co-ordinate	X(2)=875 mm
Y co-ordinate	Y(2)=0 mm
X co-ordinate	X(3)=875 mm
Y co-ordinate	Y(3)=135 mm
X co-ordinate	X(4)=1007 mm
Y co-ordinate	Y(4)=400 mm
X co-ordinate	X(5)=1207 mm
Y co-ordinate	Y(5)=400 mm
X co-ordinate	X(6)=1207 mm
Y co-ordinate	Y(6)=900 mm
X co-ordinate	X(7)=707 mm
Y co-ordinate	Y(7)=880 mm
X co-ordinate	X(8)=707 mm
Y co-ordinate	Y(8)=780 mm
X co-ordinate	X(9)=0 mm
Y co-ordinate	Y(9)=780 mm
X co-ordinate	X(10)=0 mm
Y co-ordinate	Y(10)=620 mm
X co-ordinate	X(11)=391.5 mm

Y co-ordinate	Y(11)=620 mm
X co-ordinate	X(12)=391.5 mm
Y co-ordinate	Y(12)=600 mm
X co-ordinate	X(13)=351.5 mm
Y co-ordinate	Y(13)=600 mm
X co-ordinate	X(14)=407.5 mm
Y co-ordinate	Y(14)=320 mm
X co-ordinate	X(15)=357.5 mm
Y co-ordinate	Y(15)=240 mm
X co-ordinate	X(16)=130 mm
Y co-ordinate	Y(16)=135 mm
X co-ordinate	X(17)=125 mm
Y co-ordinate	Y(17)=0 mm
Depth of composite section	di=900 mm
Area of in-situ concrete	Ai=442313 mm²
Centroid of in-situ concrete	Yi=595.94 mm
Modulus of elasticity (strand)	Ep=195 kN/mm²

Cross-section 1

Distance from mid-span of beam	csd(1)=3.25 m
Number of layers of strand	nls(1)=4
Height above soffit	ds(1)=60 mm
Number of strands	ns(1)=10
Height above soffit	ds(2)=100 mm
Number of strands	ns(2)=8
Height above soffit	ds(3)=140 mm
Number of strands	ns(3)=3
Height above soffit	ds(4)=600 mm
Number of strands	ns(4)=2

Short Term Losses (BS EN 1992-1-1)

Relaxation at transfer (%)	str=1.5

Summary

Loss	Loss of Force kN	% Loss
Relaxation	50.37	1.5
Elastic Shortening	239.52	7.1327
Transfer Total	289.89	8.6327

Losses at Transfer

Initial force	3358 kN
Force at transfer	Pt=P0-loft=3068.1 kN

Loading	Stresses at Transfer N/mm²		
	Top of Beam	Bottom of Beam	Centroid of Strands
Prestress	-2.8875	21.047	16.212
Self weight of Beam	3.9692	-2.3245	-1.0531
Total	1.0817	18.722	15.159

Beam Concrete Stresses at Transfer

Stress Limitations (BS EN 1992-1-1, Clause 5.10.2.2)

Top of beam:
Compressive stress 1.0817 N/mm² is less than allowable stresses of 0.7*fcki=22.4 N/mm² and 0.6*fck=25.2 N/mm².
Bottom of beam:
Compressive stress 18.722 N/mm² is less than allowable stresses of 0.7*fcki=22.4 N/mm² and 0.6*fck=25.2 N/mm².

Long Term Losses (BS EN 1992-1-1, Clause 5.10.6(1))

Relaxation after transfer(%) slr(1)=1
Shrinkage per unit length sul(1)=0.3E-3
Creep coefficient φ(∞,to) crf=2

Summary

Loss	Loss of Force kN	% Loss
Relaxation	50.37	1.5
Elastic Shortening	239.52	7.1327
Transfer Total	289.89	8.6327
Relaxation	33.58	1
Shrinkage	150.7	4.4877
Creep	518.04	15.427
Long-term Total	702.32	20.915
All Losses	992.21	29.548

Losses - Long term

Initial force 3358 kN
Final force Pf=P0-loftl=2365.8 kN

Unit-weight of in-situ concrete wc=24 kN/m³

Loading	Final Stresses N/mm²		
	Top of Beam	Bottom of Beam	Centroid of Strands
Prestress	-2.2265	16.229	12.501
Self weight of Beam	3.9692	-2.3245	-1.0531
In-situ concrete	6.8424	-4.0072	-1.8155
Total	8.5851	9.8974	9.6323

Beam concrete stresses - Long term

Composite section

Height from beam soffit to
bottom of in-situ concrete hsis=135 mm
Perc'age of shrinkage remaining ps=45 %
Percentage pcr=45 %
Percentage stT=60 %
The net moment is Mc=F*e/1E3-Mb=-418.25 kNm
Stress at top of in-situ concrete:
ftisds=-(F/(Ai*mr)-F/(Ai*mr+Ac)-Mc*1E3*(di-Yc)/Ic)*mr*1E3
=-1.8074 N/mm²
Stress at bottom of in-situ concrete:
fbisds=-(F/(Ai*mr)-F/(Ai*mr+Ac)-Mc*1E3*(hsis-Yc)/Ic)*mr*1E3
=5.5544 N/mm²
Stress at top of precast concrete beam:
ftpbds=(F/(Ai*mr+Ac)+Mc*1E3*(d-Yc)/Ic+Mb*1E3*Yt/Iyy)*1E3
=-3.7947 N/mm²
Stress at bottom of precast concrete beam:
fbpbds=(F/(Ai*mr+Ac)-Mc*1E3*Yc/Ic-Mb*1E3*Yb/Iyy)*1E3
=-0.89926 N/mm²

Loading Combination 1

(no tensile stress permitted in precast beam)
Characteristic bending moment c1b(1)=400 kNm

Loading	Loading Combination 1 Stresses N/mm²			
	Top of in-situ	Top of Beam	Bottom of in-situ	Bottom of Beam
Prestress,beam and in-situ	0	8.5851	0	9.8974
Dif. shrinkage	-1.8074	-3.7947	5.5544	-0.89926
Combination 1	4.4832	1.8948	-3.0554	-4.2979
Total	2.6759	6.6852	2.499	4.7002

Loading Combination 1 - Stresses

Loading Combination 2

(tensile stress permitted (no visible cracking))
Characteristic bending moment c2b(1)=500 kNm

Loading	Loading Combination 2 Stresses N/mm²			
	Top of in-situ	Top of Beam	Bottom of in-situ	Bottom of Beam
Prestress,beam and in-situ	0	8.5851	0	9.8974
Dif. shrinkage	-1.8074	-3.7947	5.5544	-0.89926
Combination 2	4.9814	2.1053	-3.8193	-5.3724
Total	3.174	6.8957	1.7351	3.6257

Loading Combination 2 - Stress

NOTE: The stresses from temperature differences should be added to the total stresses.

Top of in-situ concrete:
Compressive stress 3.174 N/mm² is less than the maximum allowable stress of 0.6*fckc=19.2 N/mm².
Top of beam:
Compressive stress 6.8957 N/mm² is less than the maximum allowable stress of 0.6*fck=25.2 N/mm².
Bottom of in-situ concrete:
Compressive stress 1.7351 N/mm² is less than the maximum allowable stress of 0.6*fckc=19.2 N/mm².
Bottom of beam:
Compressive stress 3.6257 N/mm² is less than the maximum allowable stress of 0.6*fck=25.2 N/mm².

Location: Ex3 - 8 metre span TY4 beam with in-situ top slab

Precast prestressed concrete TY beams with in-situ top slab

Calculations for stresses at the Serviceability Limit State (SLS) in accordance with BS EN 1992-2:2005 and NA to BS EN 1992-2:2005.

Beam span under consideration span=8 m

Beam TY 4 section properties

Depth of beam	d=550 mm
Cross-sectional area	Ac=221426 mm²
Centroid above soffit	Yb=193.45 mm
Section modulus top	Zt=13.95E6 mm³
Section modulus bottom	Zb=25.68E6 mm³
Unit weight of beam	uwb=24.5 kN/m³

Concrete compressive strengths

Characteristic cylinder strength	fcki=30 N/mm² (transfer)
Characteristic cylinder strength	fck=36 N/mm²

Concrete moduli (short-term)

Concrete modulus of elasticity	Ecmi=33 kN/mm² (transfer)
Concrete modulus of elasticity	Ecmb=34 kN/mm²

Composite section properties

Char strength (in-situ concrete)	fckc=24 N/mm²
Short-term modulus of elasticity for in-situ concrete	Ecmc=31 kN/mm²

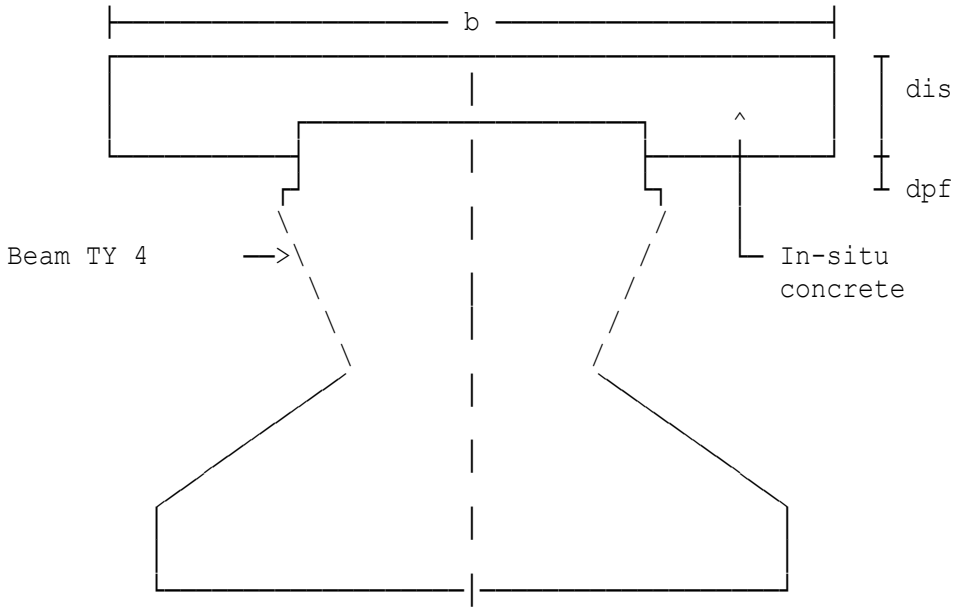

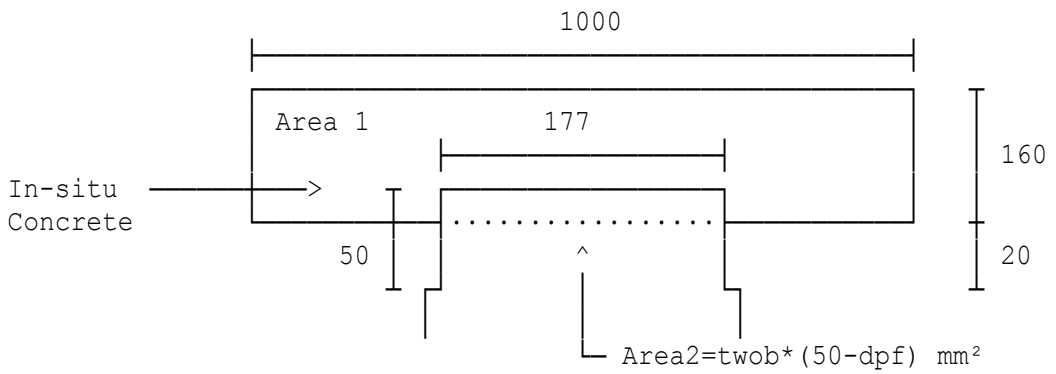

Transf'med second moment of area Ic=Iyy+Ac*(Yb-Yc)^2+mr*(Ii+Ai*(Yi -Yc)^2)=19.655E9 mm⁴
Depth of composite section di=680 mm
Nominal diameter nomd=12 mm
Nominal tensile strength nomt=1600 N/mm²
Nominal steel area noma=90 mm²
Char breaking load (strand) fpk=160 kN
Initial force per strand ipf=100 kN
Modulus of elasticity (strand) Ep=195 kN/mm²

Cross-section 1

Distance from mid-span of beam csd(1)=2.5 m
Number of layers of strand nls(1)=3
Height above soffit ds(1)=60 mm
Number of strands ns(1)=8
Height above soffit ds(2)=100 mm
Number of strands ns(2)=12
Height above soffit ds(3)=180 mm
Number of strands ns(3)=3
Bending moment from temp.loads tlb(1)=100 kNm
Bending moment from other loads olb(1)=150 kNm

Short Term Losses (BS EN 1992-1-1)

Relaxation at transfer (%) str=1

Summary

Loss	Loss of Force kN	% Loss
Relaxation	23	1
Elastic Shortening	165.49	7.1951
Transfer Total	188.49	8.1951

Losses at Transfer

Initial force 2300 kN
Force at transfer Pt=P0-loft=2111.5 kN

Loading	Stresses at Transfer N/mm²		
	Top of Beam	Bottom of Beam	Centroid of Strands
Prestress	-5.1533	17.506	13.529
Self weight of Beam	1.8981	-1.0299	-0.51601
Temporary Loads	7.1772	-3.8941	-1.9511
Other Loads	10.766	-5.8411	-2.9267
Total	14.688	6.7408	8.1354

Beam Concrete Stresses at Transfer

Stress Limitations (BS EN 1992-1-1, Clause 5.10.2.2)

Top of beam:
Compressive stress 14.688 N/mm² is less than allowable stresses of 0.7*fcki=21 N/mm² and 0.6*fck=21.6 N/mm².
Bottom of beam:
Compressive stress 6.7408 N/mm² is less than allowable stresses of 0.7*fcki=21 N/mm² and 0.6*fck=21.6 N/mm².

Long Term Losses (BS EN 1992-1-1, Clause 5.10.6(1))

Relaxation after transfer(%) slr(1)=0.8
Shrinkage per unit length sul(1)=0.3E-3
Creep coefficient φ(∞,to) crf=2

Summary

Loss	Loss of Force kN	% Loss
Relaxation	23	1
Elastic Shortening	165.49	7.1951
Transfer Total	188.49	8.1951
Relaxation	18.4	0.8
Shrinkage	121.1	5.265
Creep	239.5	10.413
Long-term Total	378.99	16.478
All Losses	567.48	24.673

Losses - Long term

Initial force 2300 kN
Final force Pf=P0-loftl=1732.5 kN

Unit-weight of in-situ concrete wc=24 kN/m³

Loading	Final Stresses N/mm²		
	Top of Beam	Bottom of Beam	Centroid of Strands
Prestress	-4.2284	14.364	11.101
Self weight of Beam	1.8981	-1.0299	-0.51601
In-situ concrete	1.299	-0.70478	-0.35313
Total	-1.0312	12.629	10.232

Beam concrete stresses - Long term

Composite section

Height from beam soffit to
bottom of in-situ concrete hsis=520 mm
Perc'age of shrinkage remaining ps=50 %
Percentage pcr=50 %
Percentage stT=45 %
The net moment is Mc=F*e/1E3-Mb=-244.06 kNm
Stress at top of in-situ concrete:
ftisds=-(F/(Ai*mr)-F/(Ai*mr+Ac)-Mc*1E3*(di-Yc)/Ic)*mr*1E3
=-1.8236 N/mm²
Stress at bottom of in-situ concrete:
fbisds=-(F/(Ai*mr)-F/(Ai*mr+Ac)-Mc*1E3*(hsis-Yc)/Ic)*mr*1E3
=-0.012188 N/mm²
Stress at top of precast concrete beam:
ftpbds=(F/(Ai*mr+Ac)+Mc*1E3*(d-Yc)/Ic+Mb*1E3*Yt/Iyy)*1E3
=5.1976 N/mm²
Stress at bottom of precast concrete beam:
fbpbds=(F/(Ai*mr+Ac)-Mc*1E3*Yc/Ic-Mb*1E3*Yb/Iyy)*1E3
=-1.8036 N/mm²

Loading Combination 1

(no tensile stress permitted in precast beam)
Characteristic bending moment c1b(1)=300 kNm

Loading	Loading Combination 1 Stresses N/mm²			
	Top of in-situ	Top of Beam	Bottom of in-situ	Bottom of Beam
Prestress,beam and in-situ	0	-1.0312	0	12.629
Dif. shrinkage	-1.8236	5.1976	-0.012188	-1.8036
Combination 1	6.0767	4.0191	3.1078	-5.3805
Total	4.253	8.1854	3.0956	5.445

Loading Combination 1 - Stresses

Loading Combination 2

(tensile stress permitted (no visible cracking))
Characteristic bending moment c2b(1)=500 kNm

Loading	Loading Combination 2 Stresses N/mm²			
	Top of in-situ	Top of Beam	Bottom of in-situ	Bottom of Beam
Prestress,beam and in-situ	0	-1.0312	0	12.629
Dif. shrinkage	-1.8236	5.1976	-0.012188	-1.8036
Combination 2	7.5958	5.0239	3.8847	-8.9675
Total	5.7722	9.1902	3.8726	1.858

Loading Combination 2 - Stress

NOTE: The stresses from temperature differences should be added to the total stresses.

Top of in-situ concrete:
Compressive stress 5.7722 N/mm² is less than the maximum allowable stress of 0.6*fckc=14.4 N/mm².
Top of beam:
Compressive stress 9.1902 N/mm² is less than the maximum allowable stress of 0.6*fck=21.6 N/mm².
Bottom of in-situ concrete:
Compressive stress 3.8726 N/mm² is less than the maximum allowable stress of 0.6*fckc=14.4 N/mm².
Bottom of beam:
Compressive stress 1.858 N/mm² is less than the maximum allowable stress of 0.6*fck=21.6 N/mm².

Location: Ex1- 16 metre span TYE10 beam with in-situ slab

Precast prestressed concrete TYE beams with in-situ top slab

Calculations for stresses at the Serviceability Limit State (SLS) to BS5400-4:1990 implemented by DOT Departmental Standard BD 44/15.

Span of beam span=16 m

Beam TYE 10 section properties

Depth of beam d=850 mm
Cross-sectional area Ac=480040 mm²
Centroid above soffit Yb=400.57 mm
Section modulus top Zt=69.86E6 mm³
Section modulus bottom Zb=78.4E6 mm³
Unit weight of beam uwb=24 kN/m³

Concrete strengths

Strength at transfer fci=40 N/mm²
Characteristic strength fcu=50 N/mm²

Concrete moduli

Modulus of elasticity at transfer for concrete strength 40 N/mm² is:
Eci=31 kN/mm²
Modulus of elasticity for concrete strength 50 N/mm² is:
Modulus Ecb=34 kN/mm²

Composite section properties

Char strength (in-situ concrete) fcuc=40 N/mm²
Modulus of elasticity for concrete strength 40 N/mm² is:
Ecc=31 kN/mm²
Second moment of area Ic=Ixx+Ac*(Yb-Yc)^2+mr*(Ii+Ai*(Yi -Yc)^2)=60.133E9 mm⁴
Depth of composite section di=980 mm
Initial force per strand if=123 kN
Modulus of elasticity Es=200 kN/mm²

Cross-section 1

Distance from mid-span of beam csd(1)=0 m
Number of layers of strand nls(1)=4
Height above soffit ds(1)=60 mm
Number of strands ns(1)=11
Height above soffit ds(2)=100 mm
Number of strands ns(2)=13
Height above soffit ds(3)=140 mm
Number of strands ns(3)=7
Height above soffit ds(4)=800 mm
Number of strands ns(4)=2

Short Term Losses

Relaxation at transfer (%) str=1

Summary

Loss	Loss of Force kN	% Loss
Relaxation Elastic Shortening	40.59 340.98	1 8.4006
Transfer Total	381.57	9.4006

Losses at Transfer

Initial force 4059 kN
Force at transfer Pt=P0-loft=3677.4 kN

Loading	Stresses at Transfer N/mm²		
	Top of Beam	Bottom of Beam	Centroid of Strands
Prestress Self weight of Beam	-6.18 5.276	19.997 -4.7024	15.76 -3.0874
Total	-0.90402	15.294	12.673

Beam Concrete Stresses at Transfer

Stress Limitations

Top of beam:
The flexural tensile stress of 0.90402 N/mm² at transfer is less than the permissible value of 1 N/mm² (Clause 6.3.2.4(b)(1)).
Bottom of beam:
Compressive stress 15.294 N/mm² is less than allowable stresses of 0.5*fci=20 N/mm² and 0.4*fcu=20 N/mm².

Long Term Losses

Relaxation after transfer(%) slr(1)=2
Shrinkage per unit length sul(1)=0.3E-3

Summary

Loss	Loss of Force kN	% Loss
Relaxation	40.59	1
Elastic Shortening	340.98	8.4006
Transfer Total	381.57	9.4006
Relaxation	81.18	2
Shrinkage	184.14	4.5366
Creep	400.82	9.8748
Long-term Total	666.14	16.411
All Losses	1047.7	25.812

Losses - Long term

Initial force 4059 kN
Final force Pf=P0-loftl=3011.3 kN
Unit-weight of in-situ concrete wc=24 kN/m³

Loading	Final Stresses N/mm²		
	Top of Beam	Bottom of Beam	Centroid of Strands
Prestress	-5.0606	16.374	12.905
Self weight of Beam	5.276	-4.7024	-3.0874
In-situ concrete	1.5858	-1.4134	-0.92794
Total	1.8012	10.259	8.8898

Beam concrete stresses - Long term

Composite section

Height from beam soffit to
bottom of in-situ concrete hsis=820 mm
Perc'age of shrinkage remaining ps=25 %
Percentage pcr=25 %
Percentage stT=67 %
The net moment is Mc=F*e/1E3-Mb=-98.356 kNm
Stress at top of in-situ concrete:
ftisds=-(F/(Ai*mr)-F/(Ai*mr+Ac)-Mc*1E3*(di-Yc)/Ic)*mr*1E3
=-1.3412 N/mm²
Stress at bottom of in-situ concrete:
fbisds=-(F/(Ai*mr)-F/(Ai*mr+Ac)-Mc*1E3*(hsis-Yc)/Ic)*mr*1E3
=-1.0795 N/mm²
Stress at top of precast concrete beam:

ftpbds=(F/(Ai*mr+Ac)+Mc*1E3*(d-Yc)/Ic+Mb*1E3*Yt/Ixx)*1E3=1.6515 N/mm²
Stress at bottom of precast concrete beam:
fbpbds=(F/(Ai*mr+Ac)-Mc*1E3*Yc/Ic-Mb*1E3*Yb/Ixx)*1E3=-0.77732 N/mm²

Combination 1 loading

Applied bending moment c1b(1)=900 kNm

Loading	Combination 1 Stresses N/mm²			
	Top of in-situ	Top of Beam	Bottom of in-situ	Bottom of Beam
Prestress,beam and in-situ	0	1.8012	0	10.259
Dif. shrinkage	-1.3412	1.6515	-1.0795	-0.77732
Combination 1	8.4582	6.0801	5.5313	-7.7473
Total	7.117	9.5328	4.4518	1.7341

Combination 1 Loading - Stresses

Combination 2 to 5 loading

Applied bending moment c2b(1)=1200 kNm

Loading	Combination 2 to 5 Stresses N/mm²			
	Top of in-situ	Top of Beam	Bottom of in-situ	Bottom of Beam
Prestress,beam and in-situ	0	1.8012	0	10.259
Dif. shrinkage	-1.3412	1.6515	-1.0795	-0.77732
Combination 2-5	9.2271	6.6329	6.0342	-10.33
Total	7.8859	10.086	4.9547	-0.84833

Combination 2 to 5 Loading - Stresses

Combination 3 loading. The stresses from the proforma for temperature differences should be added to the total stresses.

Top of in-situ concrete:
Compressive stress 7.8859 N/mm² is less than the maximum allowable stress of 0.5*fcuc=20 N/mm².
Top of beam:
Compressive stress 10.086 N/mm² is less than the maximum allowable stress of 0.4*fcu=20 N/mm².
Bottom of in-situ concrete:
Compressive stress 4.9547 N/mm² is less than the maximum allowable stress of 0.5*fcuc=20 N/mm².

Bottom of beam:
Tensile stress 0.84833 N/mm² is less than the maximum allowable tensile stress of 3.182 N/mm².

Location: Ex2 - 12.5 metre span TYE6 beam with in-situ top slab

Precast prestressed concrete TYE beams with in-situ top slab

Calculations for stresses at the Serviceability Limit State (SLS) to BS5400-4:1990 implemented by DOT Departmental Standard BD 44/15.

Span of beam span=12.5 m

Beam TYE 6 section properties

Depth of beam d=650 mm
Cross-sectional area Ac=369053 mm²
Centroid above soffit Yb=296.39 mm
Section modulus top Zt=38.69E6 mm³
Section modulus bottom Zb=46.16E6 mm³
Unit weight of beam uwb=24.5 kN/m³

Concrete strengths

Strength at transfer fci=40 N/mm²
Characteristic strength fcu=52.5 N/mm²

Concrete moduli

Modulus of elasticity at transfer for concrete strength 40 N/mm² is:
Eci=31 kN/mm²
Modulus of elasticity for concrete strength 52.5 N/mm² is:
Modulus Ecb=34.5 kN/mm²

Composite section properties

Char strength (in-situ concrete) fcuc=40 N/mm²
Modulus of elasticity for concrete strength 40 N/mm² is:
Ecc=31 kN/mm²
Item weighting iw1=0.89855
X co-ordinate X(1)=500 mm
Y co-ordinate Y(1)=0 mm
X co-ordinate X(2)=1250 mm
Y co-ordinate Y(2)=0 mm
X co-ordinate X(3)=1245 mm
Y co-ordinate Y(3)=135 mm
X co-ordinate X(4)=1017.5 mm
Y co-ordinate Y(4)=240 mm
X co-ordinate X(5)=967.5 mm
Y co-ordinate Y(5)=320 mm
X co-ordinate X(6)=1023 mm
Y co-ordinate Y(6)=600 mm
X co-ordinate X(7)=983 mm
Y co-ordinate Y(7)=600 mm
X co-ordinate X(8)=983 mm
Y co-ordinate Y(8)=620 mm
X co-ordinate X(9)=1375 mm
Y co-ordinate Y(9)=620 mm

X co-ordinate	X(10)=1375 mm
Y co-ordinate	Y(10)=780 mm
X co-ordinate	X(11)=500 mm
Y co-ordinate	Y(11)=780 mm
X co-ordinate	X(12)=500 mm
Y co-ordinate	Y(12)=880 mm
X co-ordinate	X(13)=0 mm
Y co-ordinate	Y(13)=900 mm
X co-ordinate	X(14)=0 mm
Y co-ordinate	Y(14)=600 mm
X co-ordinate	X(15)=500 mm
Y co-ordinate	Y(15)=600 mm
X co-ordinate	X(16)=500 mm
Y co-ordinate	Y(16)=0 mm

Item No. 2

Second moment of area	IXX2=13.681E9 mm^4
Area of item	A2=369053 mm^2
Centroid from X-X axis	YC2=296.39 mm
Item weighting	iw2=0.10145
Depth of composite section	di=900 mm
Initial force per strand	if=146 kN
Modulus of elasticity	Es=200 kN/mm^2

Cross-section 1

Distance from mid-span of beam	csd(1)=2.25 m
Number of layers of strand	nls(1)=4
Height above soffit	ds(1)=60 mm
Number of strands	ns(1)=10
Height above soffit	ds(2)=100 mm
Number of strands	ns(2)=8
Height above soffit	ds(3)=140 mm
Number of strands	ns(3)=3
Height above soffit	ds(4)=600 mm
Number of strands	ns(4)=2

Short Term Losses

Relaxation at transfer (%)	str=1.5

Summary

Loss	Loss of Force kN	% Loss
Relaxation	50.37	1.5
Elastic Shortening	258.45	7.6966
Transfer Total	308.82	9.1966

Losses at Transfer

Initial force	3358 kN

Force at transfer Pt=P0-loft=3049.2 kN

Loading	Stresses at Transfer N/mm²		
	Top of Beam	Bottom of Beam	Centroid of Strands
Prestress Self weight of Beam	-4.7481 3.9728	19.167 -3.33	14.336 -1.8547
Total	-0.77531	15.837	12.481

Beam Concrete Stresses at Transfer

Stress Limitations

Top of beam:
The flexural tensile stress of 0.77531 N/mm² at transfer is less than the permissible value of 1 N/mm² (Clause 6.3.2.4(b)(1)).
Bottom of beam:
Compressive stress 15.837 N/mm² is less than allowable stresses of 0.5*fci=20 N/mm² and 0.4*fcu=21 N/mm².

Long Term Losses

Relaxation after transfer(%) slr(1)=1
Shrinkage per unit length sul(1)=0.3E-3

Summary

Loss	Loss of Force kN	% Loss
Relaxation Elastic Shortening	50.37 258.45	1.5 7.6966
Transfer Total	308.82	9.1966
Relaxation Shrinkage Creep	33.58 154.56 337.64	1 4.6027 10.055
Long-term Total	525.78	15.658
All Losses	834.6	24.854

Losses - Long term

Initial force 3358 kN
Final force Pf=P0-loftl=2523.4 kN

Unit-weight of in-situ concrete wc=24 kN/m³

Loading	Final Stresses N/mm²		
	Top of Beam	Bottom of Beam	Centroid of Strands
Prestress	-3.9294	15.862	11.864
Self weight of Beam	3.9728	-3.33	-1.8547
In-situ concrete	2.8564	-2.3942	-1.3335
Total	2.8998	10.138	8.6758

Beam concrete stresses - Long term

Composite section

Height from beam soffit to
bottom of in-situ concrete hsis=600 mm
Perc'age of shrinkage remaining ps=45 %
Percentage pcr=45 %
Percentage stT=60 %
The net moment is Mc=F*e/1E3-Mb=-292.06 kNm
Stress at top of in-situ concrete:
ftisds=-(F/(Ai*mr)-F/(Ai*mr+Ac)-Mc*1E3*(di-Yc)/Ic)*mr*1E3
=-1.3192 N/mm²
Stress at bottom of in-situ concrete:
fbisds=-(F/(Ai*mr)-F/(Ai*mr+Ac)-Mc*1E3*(hsis-Yc)/Ic)*mr*1E3
=0.54414 N/mm²
Stress at top of precast concrete beam:
ftpbds=(F/(Ai*mr+Ac)+Mc*1E3*(d-Yc)/Ic+Mb*1E3*Yt/Ixx)*1E3=1.1609 N/mm²
Stress at bottom of precast concrete beam:
fbpbds=(F/(Ai*mr+Ac)-Mc*1E3*Yc/Ic-Mb*1E3*Yb/Ixx)*1E3=-0.64917 N/mm²

Combination 1 loading

Applied bending moment c1b(1)=400 kNm

Loading	Combination 1 Stresses N/mm²			
	Top of in-situ	Top of Beam	Bottom of in-situ	Bottom of Beam
Prestress,beam and in-situ	0	2.8998	0	10.138
Dif. shrinkage	-1.3192	1.1609	0.54414	-0.64917
Combination 1	4.1418	1.9467	1.2707	-4.4233
Total	2.8226	6.0074	1.8149	5.0655

Combination 1 Loading - Stresses

Combination 2 to 5 loading

Applied bending moment c2b(1)=500 kNm

Loading	Combination 2 to 5 Stresses N/mm²			
	Top of in-situ	Top of Beam	Bottom of in-situ	Bottom of Beam
Prestress,beam and in-situ	0	2.8998	0	10.138
Dif. shrinkage	-1.3192	1.1609	0.54414	-0.64917
Combination 2-5	4.602	2.163	1.4119	-5.5292
Total	3.2828	6.2237	1.956	3.9596

Combination 2 to 5 Loading - Stresses

Combination 3 loading. The stresses from the proforma for temperature differences should be added to the total stresses.

Top of in-situ concrete:
Compressive stress 3.2828 N/mm² is less than the maximum allowable stress of 0.5*fcuc=20 N/mm².
Top of beam:
Compressive stress 6.2237 N/mm² is less than the maximum allowable stress of 0.4*fcu=21 N/mm².
Bottom of in-situ concrete:
Compressive stress 1.956 N/mm² is less than the maximum allowable stress of 0.5*fcuc=20 N/mm².
Bottom of beam:
Compressive stress 3.9596 N/mm² is less than the maximum allowable stress of 0.4*fcu=21 N/mm².

Location: Ex3 - 8 metre span TYE4 beam with in-situ top slab

Precast prestressed concrete TYE beams with in-situ top slab

Calculations for stresses at the Serviceability Limit State (SLS) to BS5400-4:1990 implemented by DOT Departmental Standard BD 44/15.

Span of beam span=8 m

Beam TYE 4 section properties

Depth of beam d=550 mm
Cross-sectional area Ac=316654 mm²
Centroid above soffit Yb=246.79 mm
Section modulus top Zt=26.86E6 mm³
Section modulus bottom Zb=33E6 mm³
Unit weight of beam uwb=24.5 kN/m³

Concrete strengths

Strength at transfer fci=37.5 N/mm²
Characteristic strength fcu=45 N/mm²

Concrete moduli

Modulus of elasticity at transfer for concrete strength 37.5 N/mm² is:
Eci=30.25 kN/mm²
Modulus of elasticity for concrete strength 45 N/mm² is:
Modulus Ecb=32.5 kN/mm²

Composite section properties

Char strength (in-situ concrete) fcuc=30 N/mm²
Modulus of elasticity for concrete strength 30 N/mm² is:
Ecc=28 kN/mm²
Transf'med second moment of area Ic=Ixx+Ac*(Yb-Yc)^2+mr*(Ii+Ai*(Yi -Yc)^2)=20.016E9 mm⁴
Depth of composite section di=680 mm
Nominal diameter nomd=12 mm
Nominal tensile strength nomt=1600 N/mm²
Nominal steel area noma=90 mm²
Characteristic breaking load cbl=160 kN
Initial force per strand if=100 kN
Modulus of elasticity Es=200 kN/mm²

Cross-section 1

Distance from mid-span of beam csd(1)=0.5 m
Number of layers of strand nls(1)=3
Height above soffit ds(1)=60 mm
Number of strands ns(1)=6
Height above soffit ds(2)=100 mm
Number of strands ns(2)=8

Height above soffit ds(3)=180 mm
Number of strands ns(3)=3
Bending moment from temp.loads tlb(1)=100 kNm
Bending moment from other loads olb(1)=150 kNm

Short Term Losses

Relaxation at transfer (%) str=1

Summary

Loss	Loss of Force kN	% Loss
Relaxation	17	1
Elastic Shortening	98.808	5.8122
Transfer Total	115.81	6.8122

Losses at Transfer

Initial force 1700 kN
Force at transfer Pt=P0-loft=1584.2 kN

Loading	Stresses at Transfer N/mm²		
	Top of Beam	Bottom of Beam	Centroid of Strands
Prestress	-3.6549	12.05	9.1943
Self weight of Beam	2.2746	-1.8513	-1.1012
Temporary Loads	3.7231	-3.0303	-1.8024
Other Loads	5.5846	-4.5455	-2.7036
Total	7.9274	2.6226	3.5871

Beam Concrete Stresses at Transfer

Stress Limitations

Top of beam:
Compressive stress 7.9274 N/mm² is less than allowable stresses of 0.5*fci=18.75 N/mm² and 0.4*fcu=18 N/mm².
Bottom of beam:
Compressive stress 2.6226 N/mm² is less than allowable stresses of 0.5*fci=18.75 N/mm² and 0.4*fcu=18 N/mm².

Long Term Losses

Relaxation after transfer(%) slr(1)=0.8
Shrinkage per unit length sul(1)=0.3E-3

Summary

Loss	Loss of Force kN	% Loss
Relaxation Elastic Shortening	17 98.808	1 5.8122
Transfer Total	115.81	6.8122
Relaxation Shrinkage Creep	13.6 91.8 84.439	0.8 5.4 4.967
Long-term Total	189.84	11.167
All Losses	305.65	17.979

Losses - Long term

Initial force 1700 kN
Final force Pf=P0-loftl=1394.4 kN
Unit-weight of in-situ concrete wc=24 kN/m³

Loading	Final Stresses N/mm²		
	Top of Beam	Bottom of Beam	Centroid of Strands
Prestress Self weight of Beam In-situ concrete	-3.2169 2.2746 1.0281	10.606 -1.8513 -0.83681	8.0925 -1.1012 -0.49773
Total	0.085822	7.9176	6.4936

Beam concrete stresses - Long term

Composite section

Height from beam soffit to
bottom of in-situ concrete hsis=520 mm
Perc'age of shrinkage remaining ps=50 %
Percentage pcr=50 %
Percentage stT=45 %
The net moment is Mc=F*e/1E3-Mb=-127.43 kNm
Stress at top of in-situ concrete:
ftisds=-(F/(Ai*mr)-F/(Ai*mr+Ac)-Mc*1E3*(di-Yc)/Ic)*mr*1E3
=-1.1985 N/mm²
Stress at bottom of in-situ concrete:
fbisds=-(F/(Ai*mr)-F/(Ai*mr+Ac)-Mc*1E3*(hsis-Yc)/Ic)*mr*1E3
=-0.32097 N/mm²
Stress at top of precast concrete beam:

ftpbds=(F/(Ai*mr+Ac)+Mc*1E3*(d-Yc)/Ic+Mb*1E3*Yt/Ixx)*1E3=1.9741 N/mm²
Stress at bottom of precast concrete beam:
fbpbds=(F/(Ai*mr+Ac)-Mc*1E3*Yc/Ic-Mb*1E3*Yb/Ixx)*1E3=-0.94254 N/mm²

Combination 1 loading

Applied bending moment c1b(1)=300 kNm

Loading	Combination 1 Stresses N/mm²			
	Top of in-situ	Top of Beam	Bottom of in-situ	Bottom of Beam
Prestress,beam and in-situ	0	0.085822	0	7.9176
Dif. shrinkage	-1.1985	1.9741	-0.32097	-0.94254
Combination 1	5.6986	4.0165	2.9438	-5.2312
Total	4.5	6.0764	2.6229	1.7439

Combination 1 Loading - Stresses

Combination 2 to 5 loading

Applied bending moment c2b(1)=500 kNm

Loading	Combination 2 to 5 Stresses N/mm²			
	Top of in-situ	Top of Beam	Bottom of in-situ	Bottom of Beam
Prestress,beam and in-situ	0	0.085822	0	7.9176
Dif. shrinkage	-1.1985	1.9741	-0.32097	-0.94254
Combination 2-5	7.1232	5.0206	3.6798	-8.7186
Total	5.9247	7.0805	3.3588	-1.7436

Combination 2 to 5 Loading - Stresses

Combination 3 loading. The stresses from the proforma for temperature differences should be added to the total stresses.

Top of in-situ concrete:
Compressive stress 5.9247 N/mm² is less than the maximum allowable stress of 0.5*fcuc=15 N/mm².
Top of beam:
Compressive stress 7.0805 N/mm² is less than the maximum allowable stress of 0.4*fcu=18 N/mm².
Bottom of in-situ concrete:
Compressive stress 3.3588 N/mm² is less than the maximum allowable stress of 0.5*fcuc=15 N/mm².

Bottom of beam:
Tensile stress 1.7436 N/mm² is less than the maximum allowable tensile stress of 3.0187 N/mm².

Location: Ex1- 16 metre span TYE10 beam with in-situ slab

Precast prestressed concrete TYE beams with in-situ top slab

Calculations for stresses at the Serviceability Limit State (SLS) in accordance with BS EN 1992-2:2005 and NA to BS EN 1992-2:2005.

Beam span under consideration span=16 m

Beam TYE 10 section properties

Depth of beam	d=850 mm
Cross-sectional area	Ac=480040 mm²
Centroid above soffit	Yb=400.57 mm
Section modulus top	Zt=69.86E6 mm³
Section modulus bottom	Zb=78.4E6 mm³
Unit weight of beam	uwb=24 kN/m³

Concrete compressive strengths

Characteristic cylinder strength	fcki=32 N/mm² (transfer)
Characteristic cylinder strength	fck=40 N/mm²

Concrete moduli (short-term)

Concrete modulus of elasticity	Ecmi=33 kN/mm² (transfer)
Concrete modulus of elasticity	Ecmb=35 kN/mm²

Composite section properties

Char strength (in-situ concrete)	fckc=32 N/mm²
Short-term modulus of elasticity for in-situ concrete	Ecmc=33 kN/mm²
Second moment of area	Ic=Iyy+Ac*(Yb-Yc)^2+mr*(Ii+Ai*(Yi -Yc)^2)=60.133E9 mm⁴
Depth of composite section	di=980 mm
Modulus of elasticity (strand)	Ep=195 kN/mm²

Cross-section 1

Distance from mid-span of beam	csd(1)=0 m
Number of layers of strand	nls(1)=4
Height above soffit	ds(1)=60 mm
Number of strands	ns(1)=11
Height above soffit	ds(2)=100 mm
Number of strands	ns(2)=13
Height above soffit	ds(3)=140 mm
Number of strands	ns(3)=7
Height above soffit	ds(4)=800 mm
Number of strands	ns(4)=2

Short Term Losses (BS EN 1992-1-1)

Relaxation at transfer (%) str=1

Summary

Loss	Loss of Force kN	% Loss
Relaxation Elastic Shortening	40.59 289.78	1 7.1393
Transfer Total	330.37	8.1393

Losses at Transfer

Initial force 4059 kN
Force at transfer Pt=P0-loft=3728.6 kN

Loading	Stresses at Transfer N/mm²		
	Top of Beam	Bottom of Beam	Centroid of Strands
Prestress Self weight of Beam	-6.2661 5.276	20.275 -4.7024	15.979 -3.0874
Total	-0.99005	15.573	12.892

Beam Concrete Stresses at Transfer

Stress Limitations (BS EN 1992-1-1, Clause 5.10.2.2)

Top of beam:
The flexural tensile stress of 0.99005 N/mm² at transfer is less than the permissible value of 1 N/mm² (as was permitted in BS5400-4).
Bottom of beam:
Compressive stress 15.573 N/mm² is less than allowable stresses of 0.7*fcki=22.4 N/mm² and 0.6*fck=24 N/mm².

Long Term Losses (BS EN 1992-1-1, Clause 5.10.6(1))

Relaxation after transfer(%) slr(1)=2
Shrinkage per unit length sul(1)=0.3E-3
Creep coefficient φ(∞,to) crf=2

Summary

Loss	Loss of Force kN	% Loss
Relaxation	40.59	1
Elastic Shortening	289.78	7.1393
Transfer Total	330.37	8.1393
Relaxation	81.18	2
Shrinkage	179.54	4.4232
Creep	465.78	11.475
Long-term Total	726.5	17.898
All Losses	1056.9	26.038

Losses - Long term

Initial force 4059 kN
Final force Pf=P0-loftl=3002.1 kN
Unit-weight of in-situ concrete wc=24 kN/m³

Loading	Final Stresses N/mm²		
	Top of Beam	Bottom of Beam	Centroid of Strands
Prestress	-5.0452	16.325	12.866
Self weight of Beam	5.276	-4.7024	-3.0874
In-situ concrete	1.5858	-1.4134	-0.92794
Total	1.8166	10.209	8.8505

Beam concrete stresses - Long term

Composite section

Height from beam soffit to
bottom of in-situ concrete hsis=820 mm
Perc'age of shrinkage remaining ps=25 %
Percentage pcr=25 %
Percentage stT=67 %
The net moment is Mc=F*e/1E3-Mb=-149.44 kNm
Stress at top of in-situ concrete:
ftisds=-(F/(Ai*mr)-F/(Ai*mr+Ac)-Mc*1E3*(di-Yc)/Ic)*mr*1E3
=-1.4506 N/mm²
Stress at bottom of in-situ concrete:
fbisds=-(F/(Ai*mr)-F/(Ai*mr+Ac)-Mc*1E3*(hsis-Yc)/Ic)*mr*1E3
=-1.053 N/mm²
Stress at top of precast concrete beam:

ftpbds=(F/(Ai*mr+Ac)+Mc*1E3*(d-Yc)/Ic+Mb*1E3*Yt/Iyy)*1E3
=1.7186 N/mm²

Stress at bottom of precast concrete beam:

fbpbds=(F/(Ai*mr+Ac)-Mc*1E3*Yc/Ic-Mb*1E3*Yb/Iyy)*1E3
=-0.81018 N/mm²

Loading Combination 1

(no tensile stress permitted in precast beam)
Characteristic bending moment c1b(1)=900 kNm

Loading	Loading Combination 1 Stresses N/mm²			
	Top of in-situ	Top of Beam	Bottom of in-situ	Bottom of Beam
Prestress,beam and in-situ	0	1.8166	0	10.209
Dif. shrinkage	-1.4506	1.7186	-1.053	-0.81018
Combination 1	8.4582	6.0801	5.5313	-7.7473
Total	7.0076	9.6153	4.4783	1.6514

Loading Combination 1 - Stresses

Loading Combination 2

(tensile stress permitted (no visible cracking))
Characteristic bending moment c2b(1)=1200 kNm

Loading	Loading Combination 2 Stresses N/mm²			
	Top of in-situ	Top of Beam	Bottom of in-situ	Bottom of Beam
Prestress,beam and in-situ	0	1.8166	0	10.209
Dif. shrinkage	-1.4506	1.7186	-1.053	-0.81018
Combination 2	9.2271	6.6329	6.0342	-10.33
Total	7.7765	10.168	4.9812	-0.93104

Loading Combination 2 - Stresses

NOTE: The stresses from temperature differences should be added to the total stresses.

Top of in-situ concrete:
Compressive stress 7.7765 N/mm² is less than the maximum allowable stress of 0.6*fckc=19.2 N/mm².
Top of beam:
Compressive stress 10.168 N/mm² is less than the maximum allowable stress of 0.6*fck=24 N/mm².

Bottom of in-situ concrete:
Compressive stress 4.9812 N/mm² is less than the maximum allowable stress of 0.6*fckc=19.2 N/mm².
Bottom of beam:
Tensile stress 0.93104 N/mm² is less than the maximum allowable tensile stress of 3.0263 N/mm².

Copyright 1986-2024 Fitzroy Systems Ltd.

Location: Ex2 - 12.5 metre span TYE6 beam with in-situ top slab

Precast prestressed concrete TYE beams with in-situ top slab

Calculations for stresses at the Serviceability Limit State (SLS) in accordance with BS EN 1992-2:2005 and NA to BS EN 1992-2:2005.

Beam span under consideration span=12.5 m

Beam TYE 6 section properties

Depth of beam	d=650 mm
Cross-sectional area	Ac=369053 mm²
Centroid above soffit	Yb=296.39 mm
Section modulus top	Zt=38.69E6 mm³
Section modulus bottom	Zb=46.16E6 mm³
Unit weight of beam	uwb=24.5 kN/m³

Concrete compressive strengths

Characteristic cylinder strength	fcki=32 N/mm² (transfer)
Characteristic cylinder strength	fck=42 N/mm²

Concrete moduli (short-term)

Concrete modulus of elasticity	Ecmi=34 kN/mm² (transfer)
Concrete modulus of elasticity	Ecmb=36 kN/mm²

Composite section properties

Char strength (in-situ concrete)	fckc=32 N/mm²
Short-term modulus of elasticity for in-situ concrete	Ecmc=33 kN/mm²
X co-ordinate	X(1)=500 mm
Y co-ordinate	Y(1)=0 mm
X co-ordinate	X(2)=1250 mm
Y co-ordinate	Y(2)=0 mm
X co-ordinate	X(3)=1245 mm
Y co-ordinate	Y(3)=135 mm
X co-ordinate	X(4)=1017.5 mm
Y co-ordinate	Y(4)=240 mm
X co-ordinate	X(5)=967.5 mm
Y co-ordinate	Y(5)=320 mm
X co-ordinate	X(6)=1023 mm
Y co-ordinate	Y(6)=600 mm
X co-ordinate	X(7)=983 mm
Y co-ordinate	Y(7)=600 mm
X co-ordinate	X(8)=983 mm
Y co-ordinate	Y(8)=620 mm
X co-ordinate	X(9)=1375 mm
Y co-ordinate	Y(9)=620 mm
X co-ordinate	X(10)=1375 mm
Y co-ordinate	Y(10)=780 mm
X co-ordinate	X(11)=500 mm

Y co-ordinate	Y(11)=780 mm
X co-ordinate	X(12)=500 mm
Y co-ordinate	Y(12)=880 mm
X co-ordinate	X(13)=0 mm
Y co-ordinate	Y(13)=900 mm
X co-ordinate	X(14)=0 mm
Y co-ordinate	Y(14)=600 mm
X co-ordinate	X(15)=500 mm
Y co-ordinate	Y(15)=600 mm
X co-ordinate	X(16)=500 mm
Y co-ordinate	Y(16)=0 mm
Depth of composite section	di=900 mm
Area of in-situ concrete	Ai=270871 mm²
Centroid of in-situ concrete	Yi=726.25 mm
Modulus of elasticity (strand)	Ep=195 kN/mm²

Cross-section 1

Distance from mid-span of beam	csd(1)=2.25 m
Number of layers of strand	nls(1)=4
Height above soffit	ds(1)=60 mm
Number of strands	ns(1)=10
Height above soffit	ds(2)=100 mm
Number of strands	ns(2)=8
Height above soffit	ds(3)=140 mm
Number of strands	ns(3)=3
Height above soffit	ds(4)=600 mm
Number of strands	ns(4)=2

Short Term Losses (BS EN 1992-1-1)

Relaxation at transfer (%)	str=1.5

Summary

Loss	Loss of Force kN	% Loss
Relaxation	50.37	1.5
Elastic Shortening	214.83	6.3977
Transfer Total	265.2	7.8977

Losses at Transfer

Initial force	3358 kN
Force at transfer	Pt=P0-loft=3092.8 kN

Loading	Stresses at Transfer N/mm²		
	Top of Beam	Bottom of Beam	Centroid of Strands
Prestress Self weight of Beam	-4.8161 3.9728	19.441 -3.33	14.541 -1.8547
Total	-0.84323	16.111	12.686

Beam Concrete Stresses at Transfer

Stress Limitations (BS EN 1992-1-1, Clause 5.10.2.2)

Top of beam:
The flexural tensile stress of 0.84323 N/mm² at transfer is less than the permissible value of 1 N/mm² (as was permitted in BS5400-4).
Bottom of beam:
Compressive stress 16.111 N/mm² is less than allowable stresses of 0.7*fcki=22.4 N/mm² and 0.6*fck=25.2 N/mm².

Long Term Losses (BS EN 1992-1-1, Clause 5.10.6(1))

Relaxation after transfer(%) slr(1)=1
Shrinkage per unit length sul(1)=0.3E-3
Creep coefficient φ(∞,to) crf=2

Summary

Loss	Loss of Force kN	% Loss
Relaxation Elastic Shortening	50.37 214.83	1.5 6.3977
Transfer Total	265.2	7.8977
Relaxation Shrinkage Creep	33.58 150.7 383.61	1 4.4877 11.424
Long-term Total	567.89	16.911
All Losses	833.09	24.809

Losses - Long term

Initial force 3358 kN
Final force Pf=P0-loftl=2524.9 kN
Unit-weight of in-situ concrete wc=24 kN/m³

Loading	Final Stresses N/mm²		
	Top of Beam	Bottom of Beam	Centroid of Strands
Prestress	-3.9318	15.872	11.871
Self weight of Beam	3.9728	-3.33	-1.8547
In-situ concrete	2.8564	-2.3942	-1.3335
Total	2.8975	10.148	8.6829

Beam concrete stresses - Long term

Composite section

```
Height from beam soffit to
bottom of in-situ concrete        hsis=600 mm
Perc'age of shrinkage remaining   ps=45 %
Percentage                        pcr=45 %
Percentage                        stT=60 %
The net moment is                 Mc=F*e/1E3-Mb=-372.73 kNm
Stress at top of in-situ concrete:
       ftisds=-(F/(Ai*mr)-F/(Ai*mr+Ac)-Mc*1E3*(di-Yc)/Ic)*mr*1E3
             =-1.7412 N/mm²
Stress at bottom of in-situ concrete:
       fbisds=-(F/(Ai*mr)-F/(Ai*mr+Ac)-Mc*1E3*(hsis-Yc)/Ic)*mr*1E3
             =0.78969 N/mm²
Stress at top of precast concrete beam:
       ftpbds=(F/(Ai*mr+Ac)+Mc*1E3*(d-Yc)/Ic+Mb*1E3*Yt/Iyy)*1E3
             =1.3875 N/mm²
Stress at bottom of precast concrete beam:
       fbpbds=(F/(Ai*mr+Ac)-Mc*1E3*Yc/Ic-Mb*1E3*Yb/Iyy)*1E3
             =-0.79134 N/mm²
```

Loading Combination 1

```
(no tensile stress permitted in precast beam)
Characteristic bending moment     c1b(1)=400 kNm
```

Loading	Loading Combination 1 Stresses N/mm²			
	Top of in-situ	Top of Beam	Bottom of in-situ	Bottom of Beam
Prestress,beam and in-situ	0	2.8975	0	10.148
Dif. shrinkage	-1.7412	1.3875	0.78969	-0.79134
Combination 1	4.2947	1.7484	1.2391	-4.3308
Total	2.5535	6.0333	2.0288	5.0254

Loading Combination 1 - Stresses

Loading Combination 2

(tensile stress permitted (no visible cracking))
Characteristic bending moment c2b(1)=500 kNm

Loading	Loading Combination 2 Stresses N/mm²			
	Top of in-situ	Top of Beam	Bottom of in-situ	Bottom of Beam
Prestress,beam and in-situ	0	2.8975	0	10.148
Dif. shrinkage	-1.7412	1.3875	0.78969	-0.79134
Combination 2	4.7719	1.9426	1.3768	-5.4135
Total	3.0306	6.2276	2.1665	3.9427

Loading Combination 2 - Stresses

NOTE: The stresses from temperature differences should be added to the total stresses.

Top of in-situ concrete:
Compressive stress 3.0306 N/mm² is less than the maximum allowable stress of 0.6*fckc=19.2 N/mm².
Top of beam:
Compressive stress 6.2276 N/mm² is less than the maximum allowable stress of 0.6*fck=25.2 N/mm².
Bottom of in-situ concrete:
Compressive stress 2.1665 N/mm² is less than the maximum allowable stress of 0.6*fckc=19.2 N/mm².
Bottom of beam:
Compressive stress 3.9427 N/mm² is less than the maximum allowable stress of 0.6*fck=25.2 N/mm².

Location: Ex3 - 8 metre span TYE4 beam with in-situ top slab

Precast prestressed concrete TYE beams with in-situ top slab

Calculations for stresses at the Serviceability Limit State (SLS) in accordance with BS EN 1992-2:2005 and NA to BS EN 1992-2:2005.

Beam span under consideration span=8 m

Beam TYE 4 section properties

Depth of beam	d=550 mm
Cross-sectional area	Ac=316654 mm²
Centroid above soffit	Yb=246.79 mm
Section modulus top	Zt=26.86E6 mm³
Section modulus bottom	Zb=33E6 mm³
Unit weight of beam	uwb=24.5 kN/m³

Concrete compressive strengths

Characteristic cylinder strength	fcki=30 N/mm² (transfer)
Characteristic cylinder strength	fck=36 N/mm²

Concrete moduli (short-term)

Concrete modulus of elasticity	Ecmi=33 kN/mm² (transfer)
Concrete modulus of elasticity	Ecmb=34 kN/mm²

Composite section properties

Char strength (in-situ concrete)	fckc=24 N/mm²
Short-term modulus of elasticity for in-situ concrete	Ecmc=31 kN/mm²
Transf'med second moment of area	Ic=Iyy+Ac*(Yb-Yc)^2+mr*(Ii+Ai*(Yi -Yc)^2)=20.507E9 mm⁴
Depth of composite section	di=680 mm
Nominal diameter	nomd=12 mm
Nominal tensile strength	nomt=1600 N/mm²
Nominal steel area	noma=90 mm²
Char breaking load (strand)	fpk=160 kN
Initial force per strand	ipf=100 kN
Modulus of elasticity (strand)	Ep=195 kN/mm²

Cross-section 1

Distance from mid-span of beam	csd(1)=0.5 m
Number of layers of strand	nls(1)=3
Height above soffit	ds(1)=60 mm
Number of strands	ns(1)=6
Height above soffit	ds(2)=100 mm
Number of strands	ns(2)=8
Height above soffit	ds(3)=180 mm
Number of strands	ns(3)=3
Bending moment from temp.loads	tlb(1)=100 kNm

Bending moment from other loads olb(1)=150 kNm

Short Term Losses (BS EN 1992-1-1)

Relaxation at transfer (%) str=1

Summary

Loss	Loss of Force kN	% Loss
Relaxation	17	1
Elastic Shortening	83.907	4.9357
Transfer Total	100.91	5.9357

Losses at Transfer

Initial force 1700 kN
Force at transfer Pt=P0-loft=1599.1 kN

Loading	Stresses at Transfer N/mm²		
	Top of Beam	Bottom of Beam	Centroid of Strands
Prestress	-3.6892	12.163	9.2808
Self weight of Beam	2.2746	-1.8513	-1.1012
Temporary Loads	3.7231	-3.0303	-1.8024
Other Loads	5.5846	-4.5455	-2.7036
Total	7.893	2.7359	3.6736

Beam Concrete Stresses at Transfer

Stress Limitations (BS EN 1992-1-1, Clause 5.10.2.2)

Top of beam:
Compressive stress 7.893 N/mm² is less than allowable stresses of 0.7*fcki=21 N/mm² and 0.6*fck=21.6 N/mm².
Bottom of beam:
Compressive stress 2.7359 N/mm² is less than allowable stresses of 0.7*fcki=21 N/mm² and 0.6*fck=21.6 N/mm².

Long Term Losses (BS EN 1992-1-1, Clause 5.10.6(1))

Relaxation after transfer(%) slr(1)=0.8
Shrinkage per unit length sul(1)=0.3E-3
Creep coefficient φ(∞,to) crf=2

Summary

Loss	Loss of Force kN	% Loss
Relaxation Elastic Shortening	17 83.907	1 4.9357
Transfer Total	100.91	5.9357
Relaxation Shrinkage Creep	13.6 89.505 96.104	0.8 5.265 5.6532
Long-term Total	199.21	11.718
All Losses	300.12	17.654

Losses - Long term

Initial force 1700 kN
Final force Pf=P0-loftl=1399.9 kN
Unit-weight of in-situ concrete wc=24 kN/m³

Loading	Final Stresses N/mm²		
	Top of Beam	Bottom of Beam	Centroid of Strands
Prestress Self weight of Beam In-situ concrete	-3.2297 2.2746 1.0281	10.648 -1.8513 -0.83681	8.1246 -1.1012 -0.49773
Total	0.073062	7.9596	6.5257

Beam concrete stresses - Long term

Composite section

Height from beam soffit to
bottom of in-situ concrete hsis=520 mm
Perc'age of shrinkage remaining ps=50 %
Percentage pcr=50 %
Percentage stT=45 %
The net moment is Mc=F*e/1E3-Mb=-167.95 kNm
Stress at top of in-situ concrete:
ftisds=-(F/(Ai*mr)-F/(Ai*mr+Ac)-Mc*1E3*(di-Yc)/Ic)*mr*1E3
=-1.4431 N/mm²
Stress at bottom of in-situ concrete:
fbisds=-(F/(Ai*mr)-F/(Ai*mr+Ac)-Mc*1E3*(hsis-Yc)/Ic)*mr*1E3
=-0.24828 N/mm²
Stress at top of precast concrete beam:

ftpbds=(F/(Ai*mr+Ac)+Mc*1E3*(d-Yc)/Ic+Mb*1E3*Yt/Iyy)*1E3
=2.2317 N/mm²

Stress at bottom of precast concrete beam:
fbpbds=(F/(Ai*mr+Ac)-Mc*1E3*Yc/Ic-Mb*1E3*Yb/Iyy)*1E3=-1.07 N/mm²

Loading Combination 1

(no tensile stress permitted in precast beam)
Characteristic bending moment c1b(1)=300 kNm

Loading	Loading Combination 1 Stresses N/mm²			
	Top of in-situ	Top of Beam	Bottom of in-situ	Bottom of Beam
Prestress,beam and in-situ	0	0.073062	0	7.9596
Dif. shrinkage	-1.4431	2.2317	-0.24828	-1.07
Combination 1	5.8117	3.8384	2.9662	-5.1672
Total	4.3687	6.1432	2.7179	1.7224

Loading Combination 1 - Stresses

Loading Combination 2

(tensile stress permitted (no visible cracking))
Characteristic bending moment c2b(1)=500 kNm

Loading	Loading Combination 2 Stresses N/mm²			
	Top of in-situ	Top of Beam	Bottom of in-situ	Bottom of Beam
Prestress,beam and in-situ	0	0.073062	0	7.9596
Dif. shrinkage	-1.4431	2.2317	-0.24828	-1.07
Combination 2	7.2646	4.798	3.7078	-8.612
Total	5.8216	7.1028	3.4595	-1.7224

Loading Combination 2 - Stresses

NOTE: The stresses from temperature differences should be added to the total stresses.

Top of in-situ concrete:
Compressive stress 5.8216 N/mm² is less than the maximum allowable stress of 0.6*fckc=14.4 N/mm².
Top of beam:
Compressive stress 7.1028 N/mm² is less than the maximum allowable stress of 0.6*fck=21.6 N/mm².

Bottom of in-situ concrete:
Compressive stress 3.4595 N/mm² is less than the maximum allowable stress of 0.6*fckc=14.4 N/mm².
Bottom of beam:
Tensile stress 1.7224 N/mm² is less than the maximum allowable tensile stress of 2.9399 N/mm².

Location: Ex1 - 13.5 metre span TYE7 beam with solid infill

Precast prestressed concrete TYE beams with in-fill concrete

Calculations for stresses at the Serviceability Limit State (SLS) to BS5400-4:1990 implemented by DOT Departmental Standard BD 44/15.

Span of beam span=13.5 m

Beam TYE 7 section properties

Depth of beam d=700 mm
Cross-sectional area Ac=395966 mm²
Centroid above soffit Yb=321.9 mm
Section modulus top Zt=45.52E6 mm³
Section modulus bottom Zb=53.49E6 mm³
Unit weight of beam uwb=25 kN/m³

Concrete strengths

Strength at transfer fci=40 N/mm²
Characteristic strength fcu=50 N/mm²

Concrete moduli

Modulus of elasticity at transfer for concrete strength 40 N/mm² is:
Eci=31 kN/mm²
Modulus of elasticity for concrete strength 50 N/mm² is:
Ecb=34 kN/mm²

Composite section properties

Char strength (in-situ concrete) fcuc=40 N/mm²
Modulus of elasticity for concrete strength 40 N/mm² is:
Ecc=31 kN/mm²
Composite section is rectangular in shape.

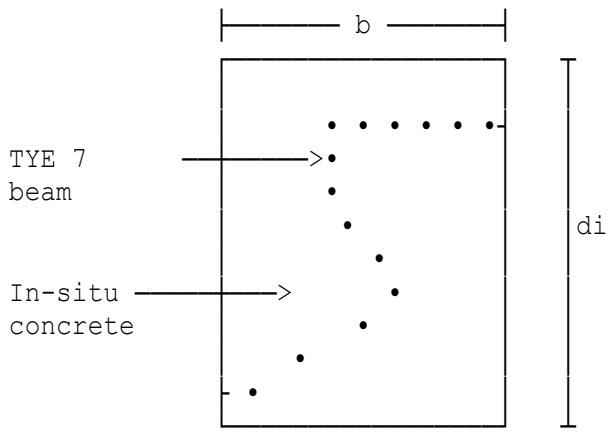

Breadth of rectangular section b=765 mm
Depth of rectangular section di=875 mm
Second moment of area Ic=Ixx+Ac*(Yb-Yc)^2+mr*(Ii+Ai*(Yi -Yc)^2)=42.708E9 mm⁴

Initial force per strand if=116 kN
Modulus of elasticity Es=200 kN/mm²

Cross-section 1

Distance from mid-span of beam csd(1)=0 m
Number of layers of strand nls(1)=4
Height above soffit ds(1)=60 mm
Number of strands ns(1)=11
Height above soffit ds(2)=100 mm
Number of strands ns(2)=9
Height above soffit ds(3)=140 mm
Number of strands ns(3)=5
Height above soffit ds(4)=650 mm
Number of strands ns(4)=2

Short Term Losses

Relaxation at transfer (%) str=1

Summary

Loss	Loss of Force kN	% Loss
Relaxation	31.32	1
Elastic Shortening	232.22	7.4146
Transfer Total	263.54	8.4146

Losses at Transfer

Initial force 3132 kN
Force at transfer Pt=P0-loft=2868.5 kN

Loading	Stresses at Transfer N/mm²		
	Top of Beam	Bottom of Beam	Centroid of Strands
Prestress	-4.7267	17.436	13.261
Self weight of Beam	4.9521	-4.216	-2.4891
Total	0.22544	13.22	10.772

Beam Concrete Stresses at Transfer

Stress Limitations

Top of beam:
Compressive stress 0.22544 N/mm² is less than allowable stresses of 0.5*fci=20 N/mm² and 0.4*fcu=20 N/mm².

Bottom of beam:
Compressive stress 13.22 N/mm² is less than allowable stresses of 0.5*fci=20 N/mm² and 0.4*fcu=20 N/mm².

Long Term Losses

Relaxation after transfer(%) slr(1)=1.5
Shrinkage per unit length sul(1)=0.3E-3

Summary

Loss	Loss of Force kN	% Loss
Relaxation Elastic Shortening	31.32 232.22	1 7.4146
Transfer Total	263.54	8.4146
Relaxation Shrinkage Creep	46.98 150.66 259.67	1.5 4.8103 8.2908
Long-term Total	457.31	14.601
All Losses	720.85	23.016

Losses - Long term

Initial force 3132 kN
Final force Pf=P0-loftl=2411.1 kN

Unit-weight of in-situ concrete wc=25 kN/m³

Loading	Final Stresses N/mm²		
	Top of Beam	Bottom of Beam	Centroid of Strands
Prestress Self weight of Beam In-situ concrete	-3.9731 4.9521 3.4193	14.656 -4.216 -2.9111	11.147 -2.4891 -1.7187
Total	4.3983	7.5289	6.9392

Beam concrete stresses - Long term

Composite section

Height from beam soffit to
bottom of in-situ concrete hsis=135 mm

Combination 1 loading

Applied bending moment c1b(1)=320 kNm

Loading	Combination 1 Stresses N/mm²			
	Top of in-situ	Top of Beam	Bottom of in-situ	Bottom of Beam
Prestress,beam and in-situ	0	4.3983	0	7.5289
Combination 1	3.6879	2.2127	-2.2666	-3.2781
Total	3.6879	6.6111	-2.2666	4.2508

Combination 1 Loading - Stresses

Combination 2 to 5 loading

Applied bending moment c2b(1)=400 kNm

Loading	Combination 2 to 5 Stresses N/mm²			
	Top of in-situ	Top of Beam	Bottom of in-situ	Bottom of Beam
Prestress,beam and in-situ	0	4.3983	0	7.5289
Combination 2-5	4.0976	2.4586	-2.8332	-4.0976
Total	4.0976	6.8569	-2.8332	3.4312

Combination 2 to 5 Loading - Stresses

Combination 3 loading. The stresses from the Proforma for temperature differences should be added to the total stresses.

Top of in-situ concrete:
Compressive stress 4.0976 N/mm² is less than the maximum allowable stress of 0.5*fcuc=20 N/mm².
Top of beam:
Compressive stress 6.8569 N/mm² is less than the maximum allowable stress of 0.4*fcu=20 N/mm².
Bottom of in-situ concrete:
Tensile stress 2.8332 N/mm² is less than the maximum allowable tensile stress of 4.4 N/mm² from Table 32.
Bottom of beam:
Compressive stress 3.4312 N/mm² is less than the maximum allowable stress of 0.4*fcu=20 N/mm².

Location: Ex2 - 13.5 metre span TYE7 edge beam with solid infill

Precast prestressed concrete TYE beams with in-fill concrete

Calculations for stresses at the Serviceability Limit State (SLS) to BS5400-4:1990 implemented by DOT Departmental Standard BD 44/15.

Span of beam span=13.5 m

Beam TYE 7 section properties

Depth of beam d=700 mm
Cross-sectional area Ac=395966 mm²
Centroid above soffit Yb=321.9 mm
Section modulus top Zt=45.52E6 mm³
Section modulus bottom Zb=53.49E6 mm³
Unit weight of beam uwb=25 kN/m³

Concrete strengths

Strength at transfer fci=40 N/mm²
Characteristic strength fcu=50 N/mm²

Concrete moduli

Modulus of elasticity at transfer for concrete strength 40 N/mm² is:
Eci=31 kN/mm²
Modulus of elasticity for concrete strength 50 N/mm² is:
Ecb=34 kN/mm²

Composite section properties

Char strength (in-situ concrete) fcuc=30 N/mm²
Modulus of elasticity for concrete strength 30 N/mm² is:
Ecc=28 kN/mm²

Item No. 1

Item weighting iw1=0.82353
X co-ordinate X(1)=0 mm
Y co-ordinate Y(1)=0 mm
X co-ordinate X(2)=765 mm
Y co-ordinate Y(2)=0 mm
X co-ordinate X(3)=765 mm
Y co-ordinate Y(3)=250 mm
X co-ordinate X(4)=915 mm
Y co-ordinate Y(4)=350 mm
X co-ordinate X(5)=915 mm
Y co-ordinate Y(5)=875 mm
X co-ordinate X(6)=415 mm
Y co-ordinate Y(6)=875 mm
X co-ordinate X(7)=415 mm
Y co-ordinate Y(7)=775 mm
X co-ordinate X(8)=0 mm

Y co-ordinate Y(8)=775 mm
X co-ordinate X(9)=0 mm
Y co-ordinate Y(9)=0 mm

Item No. 2

Second moment of area IXX2=17.218E9 mm^4
Area of item A2=395966 mm^2
Centroid from X-X axis YC2=321.9 mm
Item weighting iw2=0.17647
Depth of composite section di=775 mm
Nominal diameter nomd=12 mm
Nominal tensile strength nomt=1700 N/mm^2
Nominal steel area noma=100 mm^2
Characteristic breaking load cbl=150 kN
Initial force per strand if=100 kN
Modulus of elasticity Es=200 kN/mm^2

Cross-section 1

Distance from mid-span of beam csd(1)=2 m
Number of layers of strand nls(1)=4
Height above soffit ds(1)=60 mm
Number of strands ns(1)=11
Height above soffit ds(2)=100 mm
Number of strands ns(2)=13
Height above soffit ds(3)=140 mm
Number of strands ns(3)=8
Height above soffit ds(4)=650 mm
Number of strands ns(4)=2
Bending moment from temp.loads tlb(1)=80 kNm
Bending moment from other loads olb(1)=50 kNm

Short Term Losses

Relaxation at transfer (%) str=1

Summary

Loss	Loss of Force kN	% Loss
Relaxation	34	1
Elastic Shortening	346.32	10.186
Transfer Total	380.32	11.186

Losses at Transfer

Initial force 3400 kN
Force at transfer Pt=P0-loft=3019.7 kN

Loading	Stresses at Transfer N/mm²		
	Top of Beam	Bottom of Beam	Centroid of Strands
Prestress	-5.1766	18.526	14.164
Self weight of Beam	4.5173	-3.8459	-2.3068
Temporary Loads	1.7567	-1.4956	-0.89707
Other Loads	1.098	-0.93475	-0.56067
Total	2.1954	12.25	10.399

Beam Concrete Stresses at Transfer

Stress Limitations

Top of beam:
Compressive stress 2.1954 N/mm² is less than allowable stresses of 0.5*fci=20 N/mm² and 0.4*fcu=20 N/mm².
Bottom of beam:
Compressive stress 12.25 N/mm² is less than allowable stresses of 0.5*fci=20 N/mm² and 0.4*fcu=20 N/mm².

Long Term Losses

Relaxation after transfer(%) slr(1)=1.5
Shrinkage per unit length sul(1)=0.3E-3

Summary

Loss	Loss of Force kN	% Loss
Relaxation	34	1
Elastic Shortening	346.32	10.186
Transfer Total	380.32	11.186
Relaxation	51	1.5
Shrinkage	204	6
Creep	374.41	11.012
Long-term Total	629.41	18.512
All Losses	1009.7	29.698

Losses - Long term

Initial force 3400 kN
Final force Pf=P0-loftl=2390.3 kN

Unit-weight of in-situ concrete wc=25 kN/m³

Loading	Final Stresses N/mm²		
	Top of Beam	Bottom of Beam	Centroid of Strands
Prestress	-4.0976	14.664	11.212
Self weight of Beam	4.5173	-3.8459	-2.3068
In-situ concrete	3.6297	-3.0902	-1.8535
Total	4.0494	7.7284	7.0513

Beam concrete stresses - Long term

Composite section

Height from beam soffit to
bottom of in-situ concrete hsis=135 mm
Perc'age of shrinkage remaining ps=40 %
Percentage pcr=40 %
Percentage stT=50 %
Apply moment to beam to straighten it as follows:
The net moment is Mc=F*e/1E3-Mb=-141.24 kNm
Stress at top of in-situ concrete:
ftisds=-(F/(Ai*mr)-F/(Ai*mr+Ac)-Mc*1E3*(di-Yc)/Ic)*mr*1E3
=-0.45825 N/mm²
Stress at bottom of in-situ concrete:
fbisds=-(F/(Ai*mr)-F/(Ai*mr+Ac)-Mc*1E3*(hsis-Yc)/Ic)*mr*1E3
=1.5333 N/mm²
Stress at top of precast concrete beam:
ftpbds=(F/(Ai*mr+Ac)+Mc*1E3*(d-Yc)/Ic+Mb*1E3*Yt/Ixx)*1E3
=0.41178 N/mm²
Stress at bottom of precast concrete beam:
fbpbds=(F/(Ai*mr+Ac)-Mc*1E3*Yc/Ic-Mb*1E3*Yb/Ixx)*1E3=-0.61187 N/mm²

Combination 1 loading

Applied bending moment c1b(1)=550 kNm

Loading	Combination 1 Stresses N/mm²			
	Top of in-situ	Top of Beam	Bottom of in-situ	Bottom of Beam
Prestress,beam and in-situ	0	4.0494	0	7.7284
Dif. shrinkage	-0.45825	0.41178	1.5333	-0.61187
Combination 1	4.677	4.4752	-3.4683	-6.198
Total	4.2187	8.9364	-1.935	0.91849

Combination 1 Loading - Stresses

Combination 2 to 5 loading

Applied bending moment c2b(1)=625 kNm

Loading	Combination 2 to 5 Stresses N/mm²			
	Top of in-situ	Top of Beam	Bottom of in-situ	Bottom of Beam
Prestress,beam and in-situ	0	4.0494	0	7.7284
Dif. shrinkage	-0.45825	0.41178	1.5333	-0.61187
Combination 2-5	4.8718	4.6617	-3.9412	-7.0432
Total	4.4136	9.1229	-2.4079	0.073314

Combination 2 to 5 Loading - Stresses

Combination 3 loading. The stresses from the Proforma for temperature differences should be added to the total stresses.

Top of in-situ concrete:
Compressive stress 4.4136 N/mm² is less than the maximum allowable stress of 0.5*fcuc=15 N/mm².
Top of beam:
Compressive stress 9.1229 N/mm² is less than the maximum allowable stress of 0.4*fcu=20 N/mm².
Bottom of in-situ concrete:
Tensile stress 2.4079 N/mm² is less than the maximum allowable tensile stress of 3.6 N/mm² from Table 32.
Bottom of beam:
Compressive stress 0.073314 N/mm² is less than the maximum allowable stress of 0.4*fcu=20 N/mm².

Location: Ex3 - 15.0 metre span TYE9 beam

Precast prestressed concrete TYE beams with in-fill concrete

Calculations for stresses at the Serviceability Limit State (SLS) to BS5400-4:1990 implemented by DOT Departmental Standard BD 44/15.

Span of beam span=15 m

Beam TYE 9 section properties

Depth of beam d=800 mm
Cross-sectional area Ac=451581 mm²
Centroid above soffit Yb=374.03 mm
Section modulus top Zt=61.14E6 mm³
Section modulus bottom Zb=69.62E6 mm³
Unit weight of beam uwb=25 kN/m³

Concrete strengths

Strength at transfer fci=35 N/mm²
Characteristic strength fcu=40 N/mm²

Concrete moduli

Modulus of elasticity at transfer for concrete strength 35 N/mm² is:
Eci=29.5 kN/mm²
Modulus of elasticity for concrete strength 40 N/mm² is:
Ecb=31 kN/mm²

Composite section properties

Char strength (in-situ concrete) fcuc=35 N/mm²
Modulus of elasticity for concrete strength 35 N/mm² is:
Ecc=29.5 kN/mm²
Composite section is rectangular in shape.

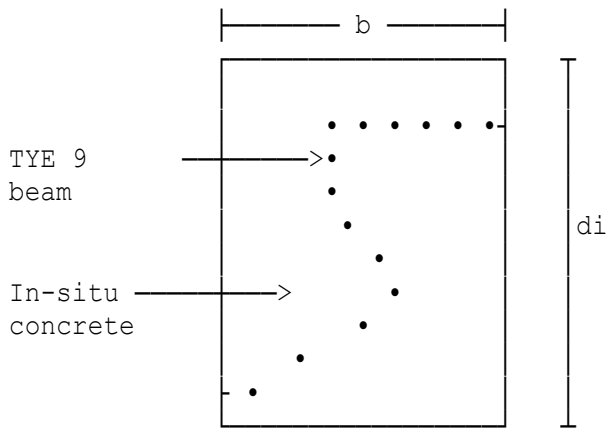

Breadth of rectangular section b=765 mm
Depth of rectangular section di=875 mm
Second moment of area Ic=Ixx+Ac*(Yb-Yc)^2+mr*(Ii+Ai*(Yi -Yc)^2)=42.708E9 mm⁴

Initial force per strand if=130 kN
Modulus of elasticity Es=200 kN/mm²

Cross-section 1

Distance from mid-span of beam csd(1)=6 m
Number of layers of strand nls(1)=6
Height above soffit ds(1)=60 mm
Number of strands ns(1)=9
Height above soffit ds(2)=100 mm
Number of strands ns(2)=9
Height above soffit ds(3)=140 mm
Number of strands ns(3)=5
Height above soffit ds(4)=650 mm
Number of strands ns(4)=2
Height above soffit ds(5)=700 mm
Number of strands ns(5)=2
Height above soffit ds(6)=750 mm
Number of strands ns(6)=2

Short Term Losses

Relaxation at transfer (%) str=1

Summary

Loss	Loss of Force kN	% Loss
Relaxation Elastic Shortening	37.7 230.56	1 6.1156
Transfer Total	268.26	7.1156

Losses at Transfer

Initial force 3770 kN
Force at transfer Pt=P0-loft=3501.7 kN

Loading	Stresses at Transfer N/mm²		
	Top of Beam	Bottom of Beam	Centroid of Strands
Prestress Self weight of Beam	-1.1478 1.8699	15.571 -1.6419	11.002 -0.68219
Total	0.72202	13.929	10.32

Beam Concrete Stresses at Transfer

Stress Limitations

Top of beam:
Compressive stress 0.72202 N/mm² is less than allowable stresses

of 0.5*fci=17.5 N/mm² and 0.4*fcu=16 N/mm².
Bottom of beam:
Compressive stress 13.929 N/mm² is less than allowable stresses
of 0.5*fci=17.5 N/mm² and 0.4*fcu=16 N/mm².

Long Term Losses

Relaxation after transfer(%) slr(1)=2
Shrinkage per unit length sul(1)=0.3E-3

Summary

Loss	Loss of Force kN	% Loss
Relaxation Elastic Shortening	37.7 230.56	1 6.1156
Transfer Total	268.26	7.1156
Relaxation Shrinkage Creep	75.4 174 360.2	2 4.6154 9.5543
Long-term Total	609.6	16.17
All Losses	877.85	23.285

Losses - Long term

Initial force 3770 kN
Final force Pf=P0-loftl=2892.1 kN

Unit-weight of in-situ concrete wc=25 kN/m³

Loading	Final Stresses N/mm²		
	Top of Beam	Bottom of Beam	Centroid of Strands
Prestress Self weight of Beam In-situ concrete	-0.94802 1.8699 0.90182	12.86 -1.6419 -0.79186	9.087 -0.68219 -0.32902
Total	1.8237	10.427	8.0757

Beam concrete stresses - Long term

Composite section

Height from beam soffit to
bottom of in-situ concrete hsis=135 mm

Combination 1 loading

Applied bending moment c1b(1)=200 kNm

Loading	Combination 1 Stresses N/mm²			
	Top of in-situ	Top of Beam	Bottom of in-situ	Bottom of Beam
Prestress,beam and in-situ	0	1.8237	0	10.427
Combination 1	2.3049	1.9098	-1.4166	-2.0488
Total	2.3049	3.7334	-1.4166	8.3779

Combination 1 Loading - Stresses

Combination 2 to 5 loading

Applied bending moment c2b(1)=250 kNm

Loading	Combination 2 to 5 Stresses N/mm²			
	Top of in-situ	Top of Beam	Bottom of in-situ	Bottom of Beam
Prestress,beam and in-situ	0	1.8237	0	10.427
Combination 2-5	2.561	2.122	-1.7708	-2.561
Total	2.561	3.9456	-1.7708	7.8657

Combination 2 to 5 Loading - Stresses

Combination 3 loading. The stresses from the Proforma for temperature differences should be added to the total stresses.

Top of in-situ concrete:
Compressive stress 2.561 N/mm² is less than the maximum allowable stress of 0.5*fcuc=17.5 N/mm².
Top of beam:
Compressive stress 3.9456 N/mm² is less than the maximum allowable stress of 0.4*fcu=16 N/mm².
Bottom of in-situ concrete:
Tensile stress 1.7708 N/mm² is less than the maximum allowable tensile stress of 4 N/mm² from Table 32.
Bottom of beam:
Compressive stress 7.8657 N/mm² is less than the maximum allowable stress of 0.4*fcu=16 N/mm².

Location: Ex1 - 13.5 metre span TYE7 beam with solid infill

Precast prestressed concrete TYE beams with in-fill concrete

Calculations for stresses at the Serviceability Limit State (SLS) in accordance with BS EN 1992-2:2005 and NA to BS EN 1992-2:2005.

Beam span under consideration span=13.5 m

Beam TYE 7 section properties

Depth of beam	d=700 mm
Cross-sectional area	Ac=395966 mm²
Centroid above soffit	Yb=321.9 mm
Section modulus top	Zt=45.52E6 mm³
Section modulus bottom	Zb=53.49E6 mm³
Unit weight of beam	uwb=25 kN/m³

Concrete compressive strengths

Characteristic cylinder strength	fcki=32 N/mm² (transfer)
Characteristic cylinder strength	fck=40 N/mm²

Concrete moduli (short-term)

Concrete modulus of elasticity	Ecmi=33 kN/mm² (transfer)
Concrete modulus of elasticity	Ecmb=35 kN/mm²

Composite section properties

Char strength (in-situ concrete)	fckc=32 N/mm²
Short-term modulus of elasticity for in-situ concrete	Ecmc=33 kN/mm²

Composite section is rectangular in shape.

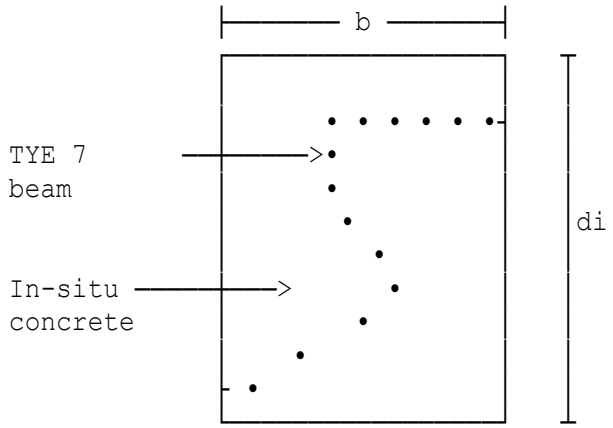

Breadth of rectangular section	b=765 mm
Depth of rectangular section	di=875 mm
Second moment of area	Ic=Iyy+Ac*(Yb-Yc)^2+mr*(Ii+Ai*(Yi -Yc)^2)=42.708E9 mm⁴
Modulus of elasticity (strand)	Ep=195 kN/mm²

Cross-section 1

Distance from mid-span of beam csd(1)=0 m
Number of layers of strand nls(1)=4
Height above soffit ds(1)=60 mm
Number of strands ns(1)=11
Height above soffit ds(2)=100 mm
Number of strands ns(2)=9
Height above soffit ds(3)=140 mm
Number of strands ns(3)=5
Height above soffit ds(4)=650 mm
Number of strands ns(4)=2

Short Term Losses (BS EN 1992-1-1)

Relaxation at transfer (%) str=1

Summary

Loss	Loss of Force kN	% Loss
Relaxation Elastic Shortening	31.32 199.04	1 6.3551
Transfer Total	230.36	7.3551

Losses at Transfer

Initial force 3132 kN
Force at transfer Pt=P0-loft=2901.6 kN

Loading	Stresses at Transfer N/mm²		
	Top of Beam	Bottom of Beam	Centroid of Strands
Prestress Self weight of Beam	-4.7813 4.9521	17.637 -4.216	13.415 -2.4891
Total	0.17076	13.421	10.926

Beam Concrete Stresses at Transfer

Stress Limitations (BS EN 1992-1-1, Clause 5.10.2.2)

Top of beam:
Compressive stress 0.17076 N/mm² is less than allowable stresses of 0.7*fcki=22.4 N/mm² and 0.6*fck=24 N/mm².
Bottom of beam:
Compressive stress 13.421 N/mm² is less than allowable stresses of 0.7*fcki=22.4 N/mm² and 0.6*fck=24 N/mm².

Long Term Losses (BS EN 1992-1-1, Clause 5.10.6(1))

Relaxation after transfer(%) slr(1)=1.5
Shrinkage per unit length sul(1)=0.3E-3
Creep coefficient φ(∞,to) crf=2

Summary

Loss	Loss of Force kN	% Loss
Relaxation Elastic Shortening	31.32 199.04	1 6.3551
Transfer Total	230.36	7.3551
Relaxation Shrinkage Creep	46.98 146.89 305.69	1.5 4.6901 9.7603
Long-term Total	499.57	15.95
All Losses	729.93	23.306

Losses - Long term

Initial force 3132 kN
Final force Pf=P0-loftl=2402.1 kN

Unit-weight of in-situ concrete wc=25 kN/m³

Loading	Final Stresses N/mm²		
	Top of Beam	Bottom of Beam	Centroid of Strands
Prestress Self weight of Beam In-situ concrete	-3.9581 4.9521 3.4193	14.601 -4.216 -2.9111	11.105 -2.4891 -1.7187
Total	4.4133	7.4737	6.8973

Beam concrete stresses - Long term

Composite section

Height from beam soffit to
bottom of in-situ concrete hsis=135 mm

Loading Combination 1

(no tensile stress permitted in precast beam)
Characteristic bending moment c1b(1)=320 kNm

Loading	Loading Combination 1 Stresses N/mm²			
	Top of in-situ	Top of Beam	Bottom of in-situ	Bottom of Beam
Prestress,beam and in-situ	0	4.4133	0	7.4737
Combination 1	3.6879	2.2127	-2.2666	-3.2781
Total	3.6879	6.626	-2.2666	4.1956

Loading Combination 1 - Stresses

Loading Combination 2

(tensile stress permitted (no visible cracking))
Characteristic bending moment c2b(1)=400 kNm

Loading	Loading Combination 2 Stresses N/mm²			
	Top of in-situ	Top of Beam	Bottom of in-situ	Bottom of Beam
Prestress,beam and in-situ	0	4.4133	0	7.4737
Combination 2	4.0976	2.4586	-2.8332	-4.0976
Total	4.0976	6.8719	-2.8332	3.3761

Loading Combination 2 - Stresses

NOTE: The stresses from temperature differences should be added to the total stresses.

Top of in-situ concrete:
Compressive stress 4.0976 N/mm² is less than the maximum allowable stress of 0.6*fckc=19.2 N/mm².
Top of beam:
Compressive stress 6.8719 N/mm² is less than the maximum allowable stress of 0.6*fck=24 N/mm².
Bottom of in-situ concrete:
Tensile stress 2.8332 N/mm² is less than the maximum allowable tensile stress of 3.0231 N/mm² (EN 1992-1-1 expression 3.23).
Bottom of beam:
Compressive stress 3.3761 N/mm² is less than the maximum allowable stress of 0.6*fck=24 N/mm².

Copyright 1986-2024 Fitzroy Systems Ltd.

Location: Ex2 - 13.5 metre span TYE7 edge beam with solid infill

Precast prestressed concrete TYE beams with in-fill concrete

Calculations for stresses at the Serviceability Limit State (SLS) in accordance with BS EN 1992-2:2005 and NA to BS EN 1992-2:2005.

Beam span under consideration span=13.5 m

Beam TYE 7 section properties

Depth of beam	d=700 mm
Cross-sectional area	Ac=395966 mm²
Centroid above soffit	Yb=321.9 mm
Section modulus top	Zt=45.52E6 mm³
Section modulus bottom	Zb=53.49E6 mm³
Unit weight of beam	uwb=25 kN/m³

Concrete compressive strengths

Characteristic cylinder strength	fcki=32 N/mm² (transfer)
Characteristic cylinder strength	fck=40 N/mm²

Concrete moduli (short-term)

Concrete modulus of elasticity	Ecmi=33 kN/mm² (transfer)
Concrete modulus of elasticity	Ecmb=35 kN/mm²

Composite section properties

Char strength (in-situ concrete)	fckc=24 N/mm²
Short-term modulus of elasticity for in-situ concrete	Ecmc=31 kN/mm²

Item No. 1

Item weighting	iw1=0.88571
X co-ordinate	X(1)=0 mm
Y co-ordinate	Y(1)=0 mm
X co-ordinate	X(2)=765 mm
Y co-ordinate	Y(2)=0 mm
X co-ordinate	X(3)=765 mm
Y co-ordinate	Y(3)=250 mm
X co-ordinate	X(4)=915 mm
Y co-ordinate	Y(4)=350 mm
X co-ordinate	X(5)=915 mm
Y co-ordinate	Y(5)=875 mm
X co-ordinate	X(6)=415 mm
Y co-ordinate	Y(6)=875 mm
X co-ordinate	X(7)=415 mm
Y co-ordinate	Y(7)=775 mm
X co-ordinate	X(8)=0 mm
Y co-ordinate	Y(8)=775 mm
X co-ordinate	X(9)=0 mm

Y co-ordinate Y(9)=0 mm

Item No. 2

Second moment of area IXX2=17.218E9 mm^4
Area of item A2=395966 mm^2
Centroid from X-X axis YC2=321.9 mm
Item weighting iw2=0.17647
Depth of composite section di=775 mm
Nominal diameter nomd=12 mm
Nominal tensile strength nomt=1700 N/mm^2
Nominal steel area noma=100 mm^2
Char breaking load (per strand) fpk=150 kN
Initial force (per strand) ipf=100 kN
Modulus of elasticity (strand) Ep=195 kN/mm^2

Cross-section 1

Distance from mid-span of beam csd(1)=2 m
Number of layers of strand nls(1)=4
Height above soffit ds(1)=60 mm
Number of strands ns(1)=11
Height above soffit ds(2)=100 mm
Number of strands ns(2)=13
Height above soffit ds(3)=140 mm
Number of strands ns(3)=8
Height above soffit ds(4)=650 mm
Number of strands ns(4)=2
Bending moment from temp.loads tlb(1)=80 kNm
Bending moment from other loads olb(1)=50 kNm

Short Term Losses (BS EN 1992-1-1)

Relaxation at transfer (%) str=1

Summary

Loss	Loss of Force kN	% Loss
Relaxation	34	1
Elastic Shortening	289.88	8.526
Transfer Total	323.88	9.526

Losses at Transfer

Initial force 3400 kN
Force at transfer Pt=P0-loft=3076.1 kN

Loading	Stresses at Transfer N/mm²		
	Top of Beam	Bottom of Beam	Centroid of Strands
Prestress	-5.2734	18.872	14.429
Self weight of Beam	4.5173	-3.8459	-2.3068
Temporary Loads	1.7567	-1.4956	-0.89707
Other Loads	1.098	-0.93475	-0.56067
Total	2.0986	12.596	10.664

Beam Concrete Stresses at Transfer

Stress Limitations (BS EN 1992-1-1, Clause 5.10.2.2)

Top of beam:
Compressive stress 2.0986 N/mm² is less than allowable stresses of 0.7*fcki=22.4 N/mm² and 0.6*fck=24 N/mm².
Bottom of beam:
Compressive stress 12.596 N/mm² is less than allowable stresses of 0.7*fcki=22.4 N/mm² and 0.6*fck=24 N/mm².

Long Term Losses (BS EN 1992-1-1, Clause 5.10.6(1))

Relaxation after transfer(%) slr(1)=1.5
Shrinkage per unit length sul(1)=0.3E-3
Creep coefficient φ(∞,to) crf=2

Summary

Loss	Loss of Force kN	% Loss
Relaxation	34	1
Elastic Shortening	289.88	8.526
Transfer Total	323.88	9.526
Relaxation	51	1.5
Shrinkage	198.9	5.85
Creep	438	12.882
Long-term Total	687.9	20.232
All Losses	1011.8	29.758

Losses - Long term

Initial force 3400 kN
Final force Pf=P0-loftl=2388.2 kN

Unit-weight of in-situ concrete wc=25 kN/m³

Loading	Final Stresses N/mm²		
	Top of Beam	Bottom of Beam	Centroid of Strands
Prestress	-4.0941	14.652	11.202
Self weight of Beam	4.5173	-3.8459	-2.3068
In-situ concrete	3.6297	-3.0902	-1.8535
Total	4.0529	7.7158	7.0417

Beam concrete stresses - Long term

Composite section

Height from beam soffit to
bottom of in-situ concrete hsis=135 mm
Perc'age of shrinkage remaining ps=40 %
Percentage pcr=40 %
Percentage stT=50 %
The net moment is Mc=F*e/1E3-Mb=-189.54 kNm
Stress at top of in-situ concrete:
ftisds=-(F/(Ai*mr)-F/(Ai*mr+Ac)-Mc*1E3*(di-Yc)/Ic)*mr*1E3
=-0.49353 N/mm²
Stress at bottom of in-situ concrete:
fbisds=-(F/(Ai*mr)-F/(Ai*mr+Ac)-Mc*1E3*(hsis-Yc)/Ic)*mr*1E3
=2.1981 N/mm²
Stress at top of precast concrete beam:
ftpbds=(F/(Ai*mr+Ac)+Mc*1E3*(d-Yc)/Ic+Mb*1E3*Yt/Iyy)*1E3
=0.27525 N/mm²
Stress at bottom of precast concrete beam:
fbpbds=(F/(Ai*mr+Ac)-Mc*1E3*Yc/Ic-Mb*1E3*Yb/Iyy)*1E3=-0.82932 N/mm²

Loading Combination 1

(no tensile stress permitted in precast beam)
Characteristic bending moment c1b(1)=550 kNm

Loading	Loading Combination 1 Stresses N/mm²			
	Top of in-situ	Top of Beam	Bottom of in-situ	Bottom of Beam
Prestress,beam and in-situ	0	4.0529	0	7.7158
Dif. shrinkage	-0.49353	0.27525	2.1981	-0.82932
Combination 1	4.7001	4.1792	-3.5019	-5.8138
Total	4.2065	8.5074	-1.3038	1.0726

Loading Combination 1 - Stresses

Loading Combination 2

(tensile stress permitted (no visible cracking))
Characteristic bending moment c2b(1)=625 kNm

Loading	Loading Combination 2 Stresses N/mm²			
	Top of in-situ	Top of Beam	Bottom of in-situ	Bottom of Beam
Prestress,beam and in-situ	0	4.0529	0	7.7158
Dif. shrinkage	-0.49353	0.27525	2.1981	-0.82932
Combination 2	4.8959	4.3534	-3.9794	-6.6066
Total	4.4024	8.6815	-1.7813	0.27982

Loading Combination 2 - Stresses

NOTE: The stresses from temperature differences should be added to the total stresses.

Top of in-situ concrete:
Compressive stress 4.4024 N/mm² is less than the maximum allowable stress of 0.6*fckc=14.4 N/mm².
Top of beam:
Compressive stress 8.6815 N/mm² is less than the maximum allowable stress of 0.6*fck=24 N/mm².
Bottom of in-situ concrete:
Tensile stress 1.7813 N/mm² is less than the maximum allowable tensile stress of 2.4956 N/mm² (EN 1992-1-1 expression 3.23).
Bottom of beam:
Compressive stress 0.27982 N/mm² is less than the maximum allowable stress of 0.6*fck=24 N/mm².

Location: Ex3 - 15.0 metre span TYE9 beam

Precast prestressed concrete TYE beams with in-fill concrete

Calculations for stresses at the Serviceability Limit State (SLS) in accordance with BS EN 1992-2:2005 and NA to BS EN 1992-2:2005.

Beam span under consideration span=15 m

Beam TYE 9 section properties

Depth of beam	d=800 mm
Cross-sectional area	Ac=451581 mm²
Centroid above soffit	Yb=374.03 mm
Section modulus top	Zt=61.14E6 mm³
Section modulus bottom	Zb=69.62E6 mm³
Unit weight of beam	uwb=25 kN/m³

Concrete compressive strengths

Characteristic cylinder strength	fcki=28 N/mm² (transfer)
Characteristic cylinder strength	fck=32 N/mm²

Concrete moduli (short-term)

Concrete modulus of elasticity	Ecmi=32 kN/mm² (transfer)
Concrete modulus of elasticity	Ecmb=33 kN/mm²

Composite section properties

Char strength (in-situ concrete)	fckc=28 N/mm²
Short-term modulus of elasticity for in-situ concrete	Ecmc=32 kN/mm²

Composite section is rectangular in shape.

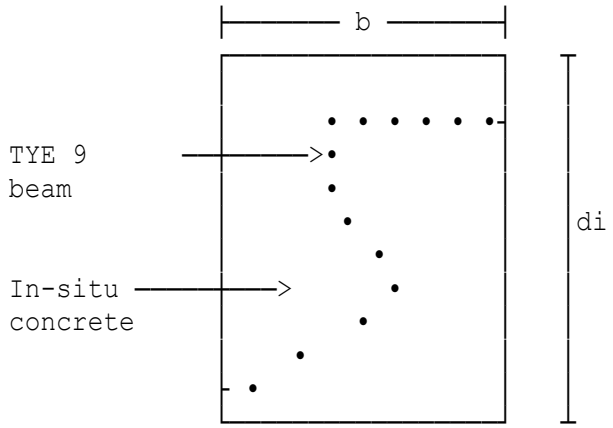

Breadth of rectangular section	b=765 mm
Depth of rectangular section	di=875 mm
Second moment of area	Ic=Iyy+Ac*(Yb-Yc)^2+mr*(Ii+Ai*(Yi -Yc)^2)=42.708E9 mm⁴
Modulus of elasticity (strand)	Ep=195 kN/mm²

Cross-section 1

Distance from mid-span of beam csd(1)=6 m
Number of layers of strand nls(1)=6
Height above soffit ds(1)=60 mm
Number of strands ns(1)=9
Height above soffit ds(2)=100 mm
Number of strands ns(2)=9
Height above soffit ds(3)=140 mm
Number of strands ns(3)=5
Height above soffit ds(4)=650 mm
Number of strands ns(4)=2
Height above soffit ds(5)=700 mm
Number of strands ns(5)=2
Height above soffit ds(6)=750 mm
Number of strands ns(6)=2

Short Term Losses (BS EN 1992-1-1)

Relaxation at transfer (%) str=1

Summary

Loss	Loss of Force kN	% Loss
Relaxation	37.7	1
Elastic Shortening	196.33	5.2077
Transfer Total	234.03	6.2077

Losses at Transfer

Initial force 3770 kN
Force at transfer Pt=P0-loft=3536 kN

Loading	Stresses at Transfer N/mm²		
	Top of Beam	Bottom of Beam	Centroid of Strands
Prestress	-1.1591	15.723	11.11
Self weight of Beam	1.8699	-1.6419	-0.68219
Total	0.7108	14.082	10.428

Beam Concrete Stresses at Transfer

Stress Limitations (BS EN 1992-1-1, Clause 5.10.2.2)

Top of beam:
Compressive stress 0.7108 N/mm² is less than allowable stresses of 0.7*fcki=19.6 N/mm² and 0.6*fck=19.2 N/mm².

Bottom of beam:
Compressive stress 14.082 N/mm² is less than allowable stresses of 0.7*fcki=19.6 N/mm² and 0.6*fck=19.2 N/mm².

Long Term Losses (BS EN 1992-1-1, Clause 5.10.6(1))

Relaxation after transfer(%) slr(1)=2
Shrinkage per unit length sul(1)=0.3E-3
Creep coefficient φ(∞,to) crf=2

Summary

Loss	Loss of Force kN	% Loss
Relaxation Elastic Shortening	37.7 196.33	1 5.2077
Transfer Total	234.03	6.2077
Relaxation Shrinkage Creep	75.4 169.65 386.9	2 4.5 10.263
Long-term Total	631.95	16.763
All Losses	865.98	22.97

Losses - Long term

Initial force 3770 kN
Final force Pf=P0-loftl=2904 kN

Unit-weight of in-situ concrete wc=25 kN/m³

Loading	Final Stresses N/mm²		
	Top of Beam	Bottom of Beam	Centroid of Strands
Prestress Self weight of Beam In-situ concrete	-0.95191 1.8699 0.90182	12.913 -1.6419 -0.79186	9.1242 -0.68219 -0.32902
Total	1.8198	10.48	8.113

Beam concrete stresses - Long term

Composite section

Height from beam soffit to
bottom of in-situ concrete hsis=135 mm

Loading Combination 1

(no tensile stress permitted in precast beam)
Characteristic bending moment c1b(1)=200 kNm

Loading	Loading Combination 1 Stresses N/mm²			
	Top of in-situ	Top of Beam	Bottom of in-situ	Bottom of Beam
Prestress,beam and in-situ	0	1.8198	0	10.48
Combination 1	2.3049	1.9098	-1.4166	-2.0488
Total	2.3049	3.7296	-1.4166	8.4307

Loading Combination 1 - Stresses

Loading Combination 2

(tensile stress permitted (no visible cracking))
Characteristic bending moment c2b(1)=250 kNm

Loading	Loading Combination 2 Stresses N/mm²			
	Top of in-situ	Top of Beam	Bottom of in-situ	Bottom of Beam
Prestress,beam and in-situ	0	1.8198	0	10.48
Combination 2	2.561	2.122	-1.7708	-2.561
Total	2.561	3.9418	-1.7708	7.9185

Loading Combination 2 - Stresses

NOTE: The stresses from temperature differences should be added to the total stresses.

Top of in-situ concrete:
Compressive stress 2.561 N/mm² is less than the maximum allowable stress of 0.6*fckc=16.8 N/mm².
Top of beam:
Compressive stress 3.9418 N/mm² is less than the maximum allowable stress of 0.6*fck=19.2 N/mm².
Bottom of in-situ concrete:
Tensile stress 1.7708 N/mm² is less than the maximum allowable tensile stress of 2.7656 N/mm² (EN 1992-1-1 expression 3.23).
Bottom of beam:
Compressive stress 7.9185 N/mm² is less than the maximum allowable stress of 0.6*fck=19.2 N/mm².

Location: Ex1 - 34 metre span SY beam

Precast prestressed concrete SY beams with in-situ top slab

Calculations for the stresses at the Serviceability Limit State (SLS) to BS5400-4:1990 implemented by DOT Departmental Standard BD 44/15.

Span of beam span=34 m

Beam SY 4 section properties

Depth of beam d=1800 mm
Cross-sectional area Ac=644992 mm²
Centroid above soffit Yb=752.98 mm
Section modulus top Zt=199.16E6 mm³
Section modulus bottom Zb=276.91E6 mm³
Unit weight of beam uwb=24 kN/m³

Concrete strengths

Strength at transfer fci=40 N/mm²
Characteristic strength fcu=50 N/mm²

Concrete moduli

Modulus of elasticity at transfer for concrete strength 40 N/mm² is:
Eci=31 kN/mm²
Modulus of elasticity for concrete strength 50 N/mm² is:
Ecb=34 kN/mm²

Composite section properties

Char strength (in-situ concrete) fcuc=40 N/mm²
Modulus of elasticity for concrete strength 40 N/mm² is:
Ecc=31 kN/mm²

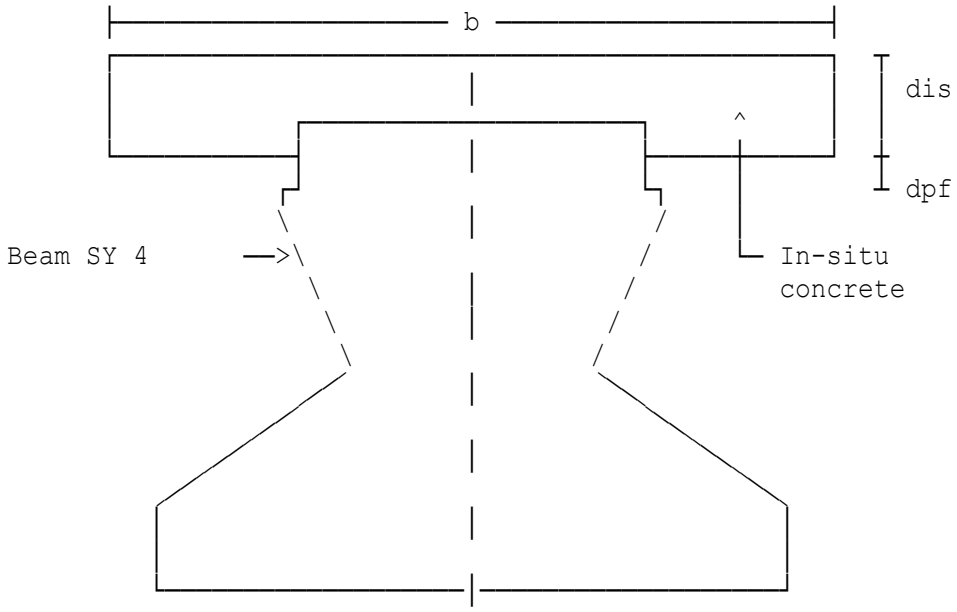

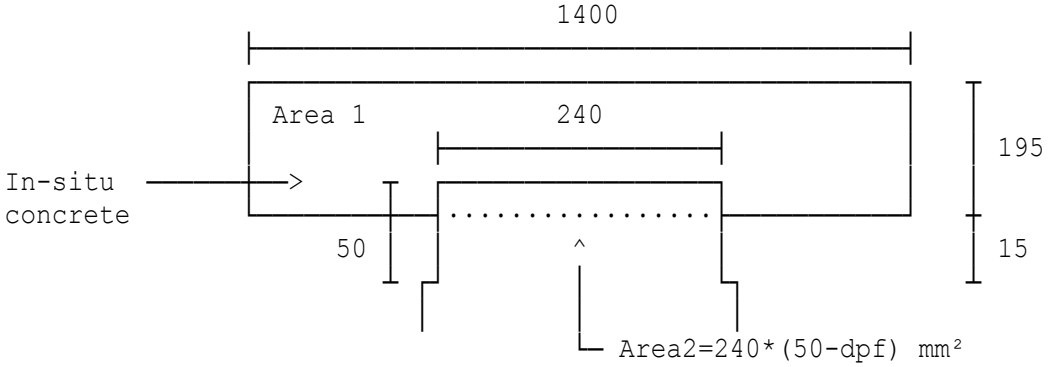

Second moment of area:
Ic=Ixx+Ac*(Yb-Yc)^2+mr*(Ii+Ai*(Yi-Yc)^2)=441.35E9 mm⁴

Depth of composite section	di=1960 mm
Initial force	if=174 kN
Modulus of elasticity	Es=200 kN/mm²

Cross-section 1

Distance from mid-span of beam	csd(1)=0 m
Number of layers of strand	nls(1)=4
Height above soffit	ds(1)=60 mm
Number of strands	ns(1)=11
Height above soffit	ds(2)=110 mm
Number of strands	ns(2)=12
Height above soffit	ds(3)=160 mm
Number of strands	ns(3)=12
Height above soffit	ds(4)=210 mm
Number of strands	ns(4)=12

Short Term Losses

Relaxation at transfer (%)	str=1

Summary

Loss	Loss of Force kN	% Loss
Relaxation	81.78	1
Elastic Shortening	1150.9	14.073
Transfer Total	1232.6	15.073

Losses at Transfer

Initial force	8178 kN
Force at transfer	Pt=P0-loft=6945.4 kN

Loading	Stresses at Transfer N/mm²		
	Top of Beam	Bottom of Beam	Centroid of Strands
Prestress Self weight of Beam	-10.729 11.232	26.228 -8.0778	23.424 -6.6125
Total	0.5033	18.15	16.811

Beam Concrete Stresses at Transfer

Stress Limitations

Top of beam:
Compressive stress 0.5033 N/mm² is less than allowable stresses of 0.5*fci=20 N/mm² and 0.4*fcu=20 N/mm².
Bottom of beam:
Compressive stress 18.15 N/mm² is less than allowable stresses of 0.5*fci=20 N/mm² and 0.4*fcu=20 N/mm².

Long Term Losses

Relaxation after transfer(%) slr(1)=2
Shrinkage per unit length sul(1)=0.3E-3

Summary

Loss	Loss of Force kN	% Loss
Relaxation Elastic Shortening	81.78 1150.9	1 14.073
Transfer Total	1232.6	15.073
Relaxation Shrinkage Creep	163.56 391.98 1244.8	2 4.7931 15.221
Long-term Total	1800.3	22.014
All Losses	3033	37.087

Losses - Long term

Initial force 8178 kN
Final force Pf=P0-loftl=5145 kN

Unit-weight of in-situ concrete wc=24 kN/m³

Loading	Final Stresses N/mm²		
	Top of Beam	Bottom of Beam	Centroid of Strands
Prestress	-7.9479	19.429	17.352
Self weight of Beam	11.232	-8.0778	-6.6125
In-situ concrete	4.6079	-3.3138	-2.7127
Total	7.8923	8.0378	8.0267

Beam concrete stresses - Long term

Composite section

Height from beam soffit to
bottom of in-situ concrete hsis=1765 mm
Perc'age of shrinkage remaining ps=25 %
Percentage pcr=25 %
Percentage stT=67 %
The net moment is Mc=F*e/1E3-Mb=-222.6 kNm
Stress at top of in-situ concrete:
ftisds=-(F/(Ai*mr)-F/(Ai*mr+Ac)-Mc*1E3*(di-Yc)/Ic)*mr*1E3
=-0.23467 N/mm²
Stress at bottom of in-situ concrete:
fbisds=-(F/(Ai*mr)-F/(Ai*mr+Ac)-Mc*1E3*(hsis-Yc)/Ic)*mr*1E3
=-0.13632 N/mm²
Stress at top of precast concrete beam:
ftpbds=(F/(Ai*mr+Ac)+Mc*1E3*(d-Yc)/Ic+Mb*1E3*Yt/Ixx)*1E3
=0.35464 N/mm²
Stress at bottom of precast concrete beam:
fbpbds=(F/(Ai*mr+Ac)-Mc*1E3*Yc/Ic-Mb*1E3*Yb/Ixx)*1E3=-0.12332 N/mm²

Combination 1 loading

Applied bending moment c1b(1)=3000 kNm

Loading	Combination 1 Stresses N/mm²			
	Top of in-situ	Top of Beam	Bottom of in-situ	Bottom of Beam
Prestress,beam and in-situ	0	7.8923	0	8.0378
Dif. shrinkage	-0.23467	0.35464	-0.13632	-0.12332
Combination 1	6.6061	5.4098	5.1481	-7.3171
Total	6.3715	13.657	5.0118	0.5973

Combination 1 Loading - Stresses

Combination 2 to 5 loading

Applied bending moment c2b(1)=3500 kNm

Loading	Combination 2 to 5 Stresses N/mm²			
	Top of in-situ	Top of Beam	Bottom of in-situ	Bottom of Beam
Prestress,beam and in-situ	0	7.8923	0	8.0378
Dif. shrinkage	-0.23467	0.35464	-0.13632	-0.12332
Combination 2-5	7.0065	5.7377	5.4601	-8.5367
Total	6.7718	13.985	5.3238	-0.62222

Combination 2 to 5 Loading - Stresses

Combination 3 loading. The stresses from the proforma for temperature differences should be added to the total stresses.

Top of in-situ concrete:
Compressive stress 6.7718 N/mm² is less than the maximum allowable stress of 0.5*fcuc=20 N/mm².
Top of beam:
Compressive stress 13.985 N/mm² is less than the maximum allowable stress of 0.4*fcu=20 N/mm².
Bottom of in-situ concrete:
Compressive stress 5.3238 N/mm² is less than the maximum allowable stress of 0.5*fcuc=20 N/mm².
Bottom of beam:
Tensile stress 0.62222 N/mm² is less than the maximum allowable tensile stress of 3.182 N/mm².

Location: Ex2 - 24.5 metre span SY2 beam

Precast prestressed concrete SY beams with in-situ top slab

Calculations for the stresses at the Serviceability Limit State (SLS) to BS5400-4:1990 implemented by DOT Departmental Standard BD 44/15.

Span of beam span=24.5 m

Beam SY 2 section properties

Depth of beam d=1600 mm
Cross-sectional area Ac=580992 mm²
Centroid above soffit Yb=650.06 mm
Section modulus top Zt=153.97E6 mm³
Section modulus bottom Zb=224.96E6 mm³
Unit weight of beam uwb=24.5 kN/m³

Concrete strengths

Strength at transfer fci=35 N/mm²
Characteristic strength fcu=45 N/mm²

Concrete moduli

Modulus of elasticity at transfer for concrete strength 35 N/mm² is:
Eci=29.5 kN/mm²
Modulus of elasticity for concrete strength 45 N/mm² is:
Ecb=32.5 kN/mm²

Composite section properties

Char strength (in-situ concrete) fcuc=35 N/mm²
Modulus of elasticity for concrete strength 35 N/mm² is:
Ecc=29.5 kN/mm²

Item No. 1

X co-ordinate X(1)=500 mm
Y co-ordinate Y(1)=0 mm
X co-ordinate X(2)=1250 mm
Y co-ordinate Y(2)=0 mm
X co-ordinate X(3)=1245 mm
Y co-ordinate Y(3)=252 mm
X co-ordinate X(4)=975 mm
Y co-ordinate Y(4)=429 mm
X co-ordinate X(5)=1035 mm
Y co-ordinate Y(5)=1550 mm
X co-ordinate X(6)=995 mm
Y co-ordinate Y(6)=1550 mm
X co-ordinate X(7)=995 mm
Y co-ordinate Y(7)=1570 mm
X co-ordinate X(8)=1800 mm
Y co-ordinate Y(8)=1570 mm

X co-ordinate	X(9)=1800 mm
Y co-ordinate	Y(9)=1900 mm
X co-ordinate	X(10)=1300 mm
Y co-ordinate	Y(10)=1900 mm
X co-ordinate	X(11)=1300 mm
Y co-ordinate	Y(11)=1800 mm
X co-ordinate	X(12)=0 mm
Y co-ordinate	Y(12)=1800 mm
X co-ordinate	X(13)=0 mm
Y co-ordinate	Y(13)=1570 mm
X co-ordinate	X(14)=755 mm
Y co-ordinate	Y(14)=1570 mm
X co-ordinate	X(15)=755 mm
Y co-ordinate	Y(15)=1550 mm
X co-ordinate	X(16)=715 mm
Y co-ordinate	Y(16)=1550 mm
X co-ordinate	X(17)=775 mm
Y co-ordinate	Y(17)=429 mm
X co-ordinate	X(18)=505 mm
Y co-ordinate	Y(18)=252 mm
X co-ordinate	X(19)=500 mm
Y co-ordinate	Y(19)=0 mm
Depth of composite section	di=1900 mm
Area of in-situ concrete	Ai=450198 mm²
Centroid of in-situ concrete	Yi=1713.4 mm
Initial force	if=90 kN
Modulus of elasticity	Es=200 kN/mm²

Cross-section 1

Distance from mid-span of beam	csd(1)=5.6 m
Number of layers of strand	nls(1)=4
Height above soffit	ds(1)=60 mm
Number of strands	ns(1)=8
Height above soffit	ds(2)=110 mm
Number of strands	ns(2)=8
Height above soffit	ds(3)=160 mm
Number of strands	ns(3)=10
Height above soffit	ds(4)=596 mm
Number of strands	ns(4)=2

Short Term Losses

Relaxation at transfer (%)	str=0.9

Summary

Loss	Loss of Force kN	% Loss
Relaxation Elastic Shortening	22.68 122.41	0.9 4.8576
Transfer Total	145.09	5.7576

Losses at Transfer

Initial force 2520 kN
Force at transfer Pt=P0-loft=2374.9 kN

Loading	Stresses at Transfer N/mm²		
	Top of Beam	Bottom of Beam	Centroid of Strands
Prestress Self weight of Beam	-3.6532 5.4879	9.3849 -3.7554	8.1766 -2.8988
Total	1.8346	5.6295	5.2778

Beam Concrete Stresses at Transfer

Stress Limitations

Top of beam:
Compressive stress 1.8346 N/mm² is less than allowable stresses of 0.5*fci=17.5 N/mm² and 0.4*fcu=18 N/mm².
Bottom of beam:
Compressive stress 5.6295 N/mm² is less than allowable stresses of 0.5*fci=17.5 N/mm² and 0.4*fcu=18 N/mm².

Long Term Losses

Relaxation after transfer(%) slr(1)=0.6
Shrinkage per unit length sul(1)=0.3E-3

Summary

Loss	Loss of Force kN	% Loss
Relaxation Elastic Shortening	22.68 122.41	0.9 4.8576
Transfer Total	145.09	5.7576
Relaxation Shrinkage Creep	15.12 126 121.6	0.6 5 4.8254
Long-term Total	262.72	10.425
All Losses	407.81	16.183

Losses - Long term

Initial force 2520 kN
Final force Pf=P0-loftl=2112.2 kN

Unit-weight of in-situ concrete wc=24 kN/m³

Loading	Final Stresses N/mm²		
	Top of Beam	Bottom of Beam	Centroid of Strands
Prestress Self weight of Beam In-situ concrete	-3.2491 5.4879 4.1656	8.3467 -3.7554 -2.8506	7.272 -2.8988 -2.2004
Total	6.4044	1.7407	2.1729

Beam concrete stresses - Long term

Composite section

Height from beam soffit to
bottom of in-situ concrete hsis=1570 mm
Perc'age of shrinkage remaining ps=45 %
Percentage pcr=45 %
Percentage stT=50 %
The net moment is Mc=F*e/1E3-Mb=93.037 kNm
Stress at top of in-situ concrete:
ftisds=-(F/(Ai*mr)-F/(Ai*mr+Ac)-Mc*1E3*(di-Yc)/Ic)*mr*1E3
=0.49975 N/mm²
Stress at bottom of in-situ concrete:
fbisds=-(F/(Ai*mr)-F/(Ai*mr+Ac)-Mc*1E3*(hsis-Yc)/Ic)*mr*1E3
=0.4289 N/mm²
Stress at top of precast concrete beam:

ftpbds=(F/(Ai*mr+Ac)+Mc*1E3*(d-Yc)/Ic+Mb*1E3*Yt/Ixx)*1E3
=-1.7861 N/mm²

Stress at bottom of precast concrete beam:
fbpbds=(F/(Ai*mr+Ac)-Mc*1E3*Yc/Ic-Mb*1E3*Yb/Ixx)*1E3=0.62227 N/mm²

Combination 1 loading

Applied bending moment c1b(1)=600 kNm

Loading	Combination 1 Stresses N/mm²			
	Top of in-situ	Top of Beam	Bottom of in-situ	Bottom of Beam
Prestress,beam and in-situ	0	6.4044	0	1.7407
Dif. shrinkage	0.49975	-1.7861	0.4289	0.62227
Combination 1	1.2692	0.78459	0.73613	-1.5429
Total	1.769	5.4029	1.165	0.82004

Combination 1 Loading - Stresses

Combination 2 to 5 loading

Applied bending moment c2b(1)=1000 kNm

Loading	Combination 2 to 5 Stresses N/mm²			
	Top of in-situ	Top of Beam	Bottom of in-situ	Bottom of Beam
Prestress,beam and in-situ	0	6.4044	0	1.7407
Dif. shrinkage	0.49975	-1.7861	0.4289	0.62227
Combination 2-5	1.8132	1.1208	1.0516	-2.5715
Total	2.3129	5.7392	1.4805	-0.20857

Combination 2 to 5 Loading - Stresses

Combination 3 loading. The stresses from the proforma for temperature differences should be added to the total stresses.

Top of in-situ concrete:
Compressive stress 2.3129 N/mm² is less than the maximum allowable stress of 0.5*fcuc=17.5 N/mm².
Top of beam:
Compressive stress 5.7392 N/mm² is less than the maximum allowable stress of 0.4*fcu=18 N/mm².
Bottom of in-situ concrete:
Compressive stress 1.4805 N/mm² is less than the maximum allowable stress of 0.5*fcuc=17.5 N/mm².

Copyright 1986-2024 Fitzroy Systems Ltd.

Bottom of beam:
Tensile stress 0.20857 N/mm² is less than the maximum allowable tensile stress of 3.0187 N/mm².

Location: Ex3 - 40.0 metre span SY6 beam

Precast prestressed concrete SY beams with in-situ top slab

Calculations for the stresses at the Serviceability Limit State (SLS) to BS5400-4:1990 implemented by DOT Departmental Standard BD 44/15.

Span of beam span=40 m

Beam SY 6 section properties

Depth of beam d=2000 mm
Cross-sectional area Ac=708992 mm²
Centroid above soffit Yb=855.36 mm
Section modulus top Zt=247.88E6 mm³
Section modulus bottom Zb=331.64E6 mm³
Unit weight of beam uwb=25 kN/m³

Concrete strengths

Strength at transfer fci=35 N/mm²
Characteristic strength fcu=40 N/mm²

Concrete moduli

Modulus of elasticity at transfer for concrete strength 35 N/mm² is:
Eci=29.5 kN/mm²
Modulus of elasticity for concrete strength 40 N/mm² is:
Ecb=31 kN/mm²

Composite section properties

Char strength (in-situ concrete) fcuc=35 N/mm²
Modulus of elasticity for concrete strength 35 N/mm² is:
Ecc=29.5 kN/mm²

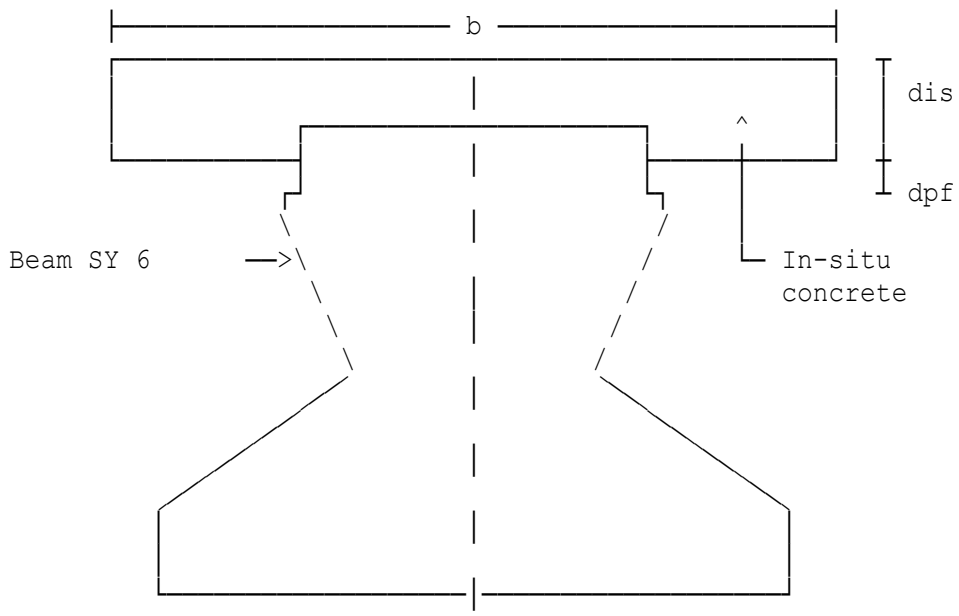

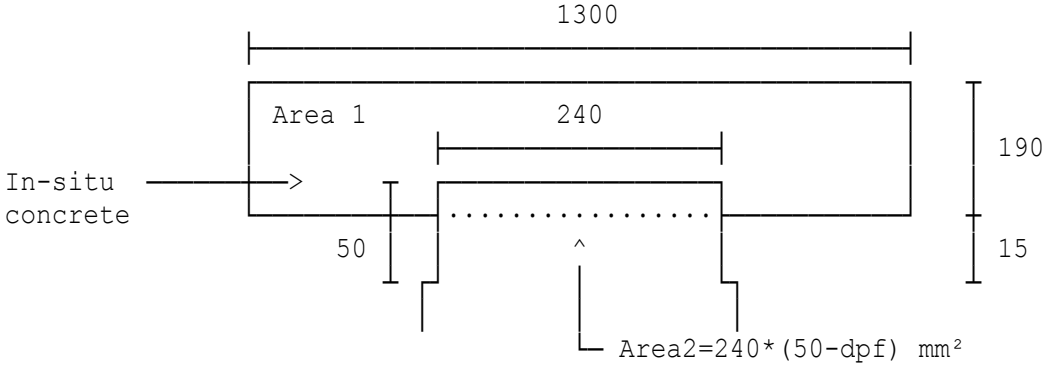

Second moment of area:
Ic=Ixx+Ac*(Yb-Yc)^2+mr*(Ii+Ai*(Yi-Yc)^2)=544.6E9 mm⁴

Depth of composite section	di=2155 mm
Initial force	if=150 kN
Modulus of elasticity	Es=200 kN/mm²

Cross-section 1

Distance from mid-span of beam	csd(1)=9.4 m
Number of layers of strand	nls(1)=4
Height above soffit	ds(1)=55 mm
Number of strands	ns(1)=10

WARNING:
Strand location is non-standard.

Height above soffit	ds(2)=110 mm
Number of strands	ns(2)=13

WARNING:
Number of strands exceeds maximum for this location.

Height above soffit	ds(3)=165 mm
Number of strands	ns(3)=8

WARNING:
Strand location is non-standard.

Height above soffit	ds(4)=600 mm

WARNING:
Height of strand above soffit exceeds maximum 596.

Number of strands	ns(4)=2

WARNING:
Strand location is non-standard.

Bending moment from temp.loads	tlb(1)=423 kNm
Bending moment from other loads	olb(1)=367 kNm

Short Term Losses

Relaxation at transfer (%) str=0.5

Summary

Loss	Loss of Force kN	% Loss
Relaxation	24.75	0.5
Elastic Shortening	534.35	10.795
Transfer Total	559.1	11.295

Losses at Transfer

Initial force 4950 kN
Force at transfer Pt=P0-loft=4390.9 kN

Loading	Stresses at Transfer N/mm²		
	Top of Beam	Bottom of Beam	Centroid of Strands
Prestress	-6.5458	15.713	14.195
Self weight of Beam	11.144	-8.3279	-7.0003
Temporary Loads	1.7068	-1.2755	-1.0721
Other Loads	1.4809	-1.1066	-0.9302
Total	7.7864	5.0026	5.1924

Beam Concrete Stresses at Transfer

Stress Limitations

Top of beam:
Compressive stress 7.7864 N/mm² is less than allowable stresses of 0.5*fci=17.5 N/mm² and 0.4*fcu=16 N/mm².
Bottom of beam:
Compressive stress 5.0026 N/mm² is less than allowable stresses of 0.5*fci=17.5 N/mm² and 0.4*fcu=16 N/mm².

Long Term Losses

Relaxation after transfer(%) slr(1)=0.4
Shrinkage per unit length sul(1)=0.3E-3

Summary

Loss	Loss of Force kN	% Loss
Relaxation Elastic Shortening	24.75 534.35	0.5 10.795
Transfer Total	559.1	11.295
Relaxation Shrinkage Creep	19.8 297 340.22	0.4 6 6.8731
Long-term Total	657.02	13.273
All Losses	1216.1	24.568

Losses - Long term

Initial force 4950 kN
Final force Pf=P0-loftl=3733.9 kN

Unit-weight of in-situ concrete wc=23.6 kN/m³

Loading	Final Stresses N/mm²		
	Top of Beam	Bottom of Beam	Centroid of Strands
Prestress Self weight of Beam In-situ concrete	-5.5663 11.144 3.5405	13.362 -8.3279 -2.6457	12.071 -7.0003 -2.2239
Total	9.1185	2.3879	2.8468

Beam concrete stresses - Long term

Composite section

Height from beam soffit to
bottom of in-situ concrete hsis=1965 mm
Perc'age of shrinkage remaining ps=40 %
Percentage pcr=40 %
Percentage stT=67 %
The net moment is Mc=F*e/1E3-Mb=239.02 kNm
Stress at top of in-situ concrete:
ftisds=-(F/(Ai*mr)-F/(Ai*mr+Ac)-Mc*1E3*(di-Yc)/Ic)*mr*1E3
=1.2482 N/mm²
Stress at bottom of in-situ concrete:
fbisds=-(F/(Ai*mr)-F/(Ai*mr+Ac)-Mc*1E3*(hsis-Yc)/Ic)*mr*1E3
=1.1648 N/mm²
Stress at top of precast concrete beam:

ftpbds=(F/(Ai*mr+Ac)+Mc*1E3*(d-Yc)/Ic+Mb*1E3*Yt/Ixx)*1E3
=-1.8114 N/mm²

Stress at bottom of precast concrete beam:
fbpbds=(F/(Ai*mr+Ac)-Mc*1E3*Yc/Ic-Mb*1E3*Yb/Ixx)*1E3=0.64352 N/mm²

Combination 1 loading

Applied bending moment c1b(1)=1900 kNm

Loading	Combination 1 Stresses N/mm²			
	Top of in-situ	Top of Beam	Bottom of in-situ	Bottom of Beam
Prestress,beam and in-situ	0	9.1185	0	2.3879
Dif. shrinkage	1.2482	-1.8114	1.1648	0.64352
Combination 1	3.6564	3.0871	2.9586	-4.0448
Total	4.9045	10.394	4.1234	-1.0134

Combination 1 Loading - Stresses

WARNING:
Bottom of beam:
Tensile stress 1.0134 N/mm² exceeds maximum allowable tensile stress of 0 N/mm².

Combination 2 to 5 loading

Applied bending moment c2b(1)=2200 kNm

Loading	Combination 2 to 5 Stresses N/mm²			
	Top of in-situ	Top of Beam	Bottom of in-situ	Bottom of Beam
Prestress,beam and in-situ	0	9.1185	0	2.3879
Dif. shrinkage	1.2482	-1.8114	1.1648	0.64352
Combination 2-5	4.022	3.3959	3.2545	-4.6835
Total	5.2702	10.703	4.4192	-1.652

Combination 2 to 5 Loading - Stresses

Combination 3 loading. The stresses from the proforma for temperature differences should be added to the total stresses.

Top of in-situ concrete:
Compressive stress 5.2702 N/mm² is less than the maximum allowable stress of 0.5*fcuc=17.5 N/mm².

Copyright 1986-2024 Fitzroy Systems Ltd.

Top of beam:
Compressive stress 10.703 N/mm² is less than the maximum allowable stress of 0.4*fcu=16 N/mm².
Bottom of in-situ concrete:
Compressive stress 4.4192 N/mm² is less than the maximum allowable stress of 0.5*fcuc=17.5 N/mm².
Bottom of beam:
Tensile stress 1.652 N/mm² is less than the maximum allowable tensile stress of 2.846 N/mm².

Copyright 1986-2024 Fitzroy Systems Ltd.

Location: Ex1 - 34 metre span SY beam

Precast prestressed concrete SY beams with in-situ top slab

Calculations for stresses at the Serviceability Limit State (SLS) in accordance with BS EN 1992-2:2005 and NA to BS EN 1992-2:2005.

Beam span under consideration span=34 m

Beam SY 4 section properties

Depth of beam	d=1800 mm
Cross-sectional area	Ac=644992 mm²
Centroid above soffit	Yb=752.98 mm
Section modulus top	Zt=199.16E6 mm³
Section modulus bottom	Zb=276.91E6 mm³
Unit weight of beam	uwb=24 kN/m³

Concrete compressive strengths

Characteristic cylinder strength	fcki=32 N/mm² (transfer)
Characteristic cylinder strength	fck=40 N/mm²

Concrete moduli (short-term)

Concrete modulus of elasticity	Ecmi=33 kN/mm² (transfer)
Concrete modulus of elasticity	Ecmb=35 kN/mm²

Composite section properties

Char strength (in-situ concrete)	fckc=32 N/mm²
Short-term modulus of elasticity for in-situ concrete	Ecmc=33 kN/mm²

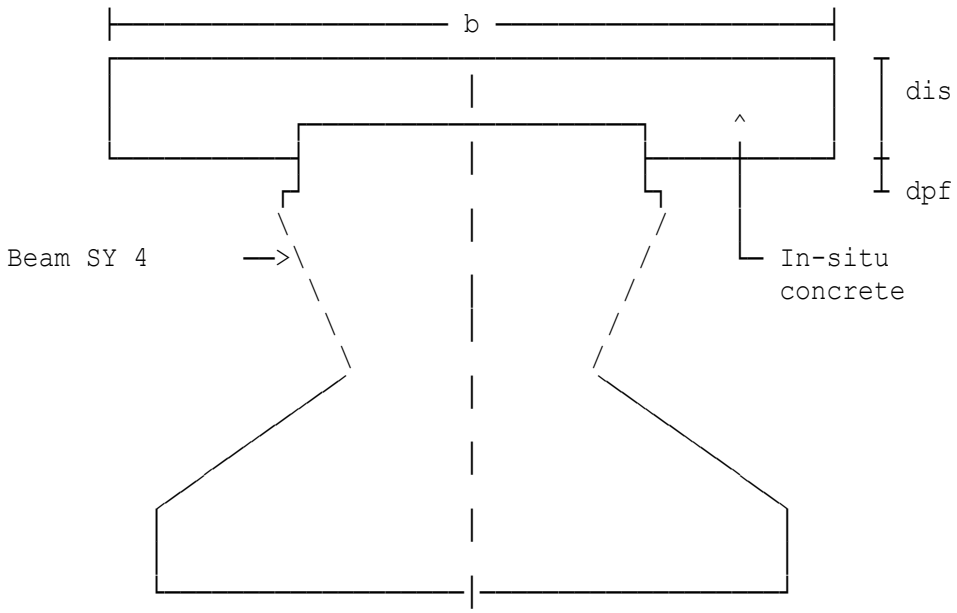

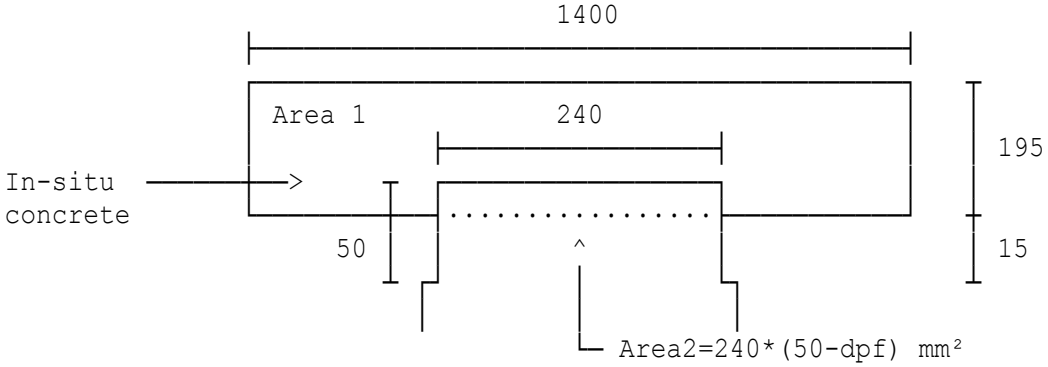

Second moment of area:
Ic=Iyy+Ac*(Yb-Yc)^2+mr*(Ii+Ai*(Yi-Yc)^2)=441.35E9 mm⁴
Depth of composite section di=1960 mm
Modulus of elasticity (strand) Ep=195 kN/mm²

Cross-section 1

Distance from mid-span of beam csd(1)=0 m
Number of layers of strand nls(1)=4
Height above soffit ds(1)=60 mm
Number of strands ns(1)=11
Height above soffit ds(2)=110 mm
Number of strands ns(2)=12
Height above soffit ds(3)=160 mm
Number of strands ns(3)=12
Height above soffit ds(4)=210 mm
Number of strands ns(4)=12

Short Term Losses (BS EN 1992-1-1)

Relaxation at transfer (%) str=1

Summary

Loss	Loss of Force kN	% Loss
Relaxation	81.78	1
Elastic Shortening	932.65	11.404
Transfer Total	1014.4	12.404

Losses at Transfer

Initial force 8178 kN
Force at transfer Pt=P0-loft=7163.6 kN

Loading	Stresses at Transfer N/mm²		
	Top of Beam	Bottom of Beam	Centroid of Strands
Prestress Self weight of Beam	-11.066 11.232	27.052 -8.0778	24.159 -6.6125
Total	0.16623	18.974	17.547

Beam Concrete Stresses at Transfer

Stress Limitations (BS EN 1992-1-1, Clause 5.10.2.2)

Top of beam:
Compressive stress 0.16623 N/mm² is less than allowable stresses of 0.7*fcki=22.4 N/mm² and 0.6*fck=24 N/mm².
Bottom of beam:
Compressive stress 18.974 N/mm² is less than allowable stresses of 0.7*fcki=22.4 N/mm² and 0.6*fck=24 N/mm².

Long Term Losses (BS EN 1992-1-1, Clause 5.10.6(1))

Relaxation after transfer(%) slr(1)=2
Shrinkage per unit length sul(1)=0.3E-3
Creep coefficient φ(∞,to) crf=2

Summary

Loss	Loss of Force kN	% Loss
Relaxation Elastic Shortening	81.78 932.65	1 11.404
Transfer Total	1014.4	12.404
Relaxation Shrinkage Creep	163.56 382.18 1582.8	2 4.6733 19.355
Long-term Total	2128.6	26.028
All Losses	3143	38.432

Losses - Long term

Initial force 8178 kN
Final force Pf=P0-loftl=5035 kN

Unit-weight of in-situ concrete wc=24 kN/m³

Loading	Final Stresses N/mm²		
	Top of Beam	Bottom of Beam	Centroid of Strands
Prestress	-7.7779	19.014	16.981
Self weight of Beam	11.232	-8.0778	-6.6125
In-situ concrete	4.6079	-3.3138	-2.7127
Total	8.0622	7.6222	7.6556

Beam concrete stresses - Long term

Composite section

```
Height from beam soffit to
bottom of in-situ concrete        hsis=1765 mm
Perc'age of shrinkage remaining   ps=25 %
Percentage                        pcr=25 %
Percentage                        stT=67 %
The net moment is                 Mc=F*e/1E3-Mb=-454.45 kNm
Stress at top of in-situ concrete:
       ftisds=-(F/(Ai*mr)-F/(Ai*mr+Ac)-Mc*1E3*(di-Yc)/Ic)*mr*1E3
             =-0.065071 N/mm²
Stress at bottom of in-situ concrete:
       fbisds=-(F/(Ai*mr)-F/(Ai*mr+Ac)-Mc*1E3*(hsis-Yc)/Ic)*mr*1E3
             =0.13572 N/mm²
Stress at top of precast concrete beam:
       ftpbds=(F/(Ai*mr+Ac)+Mc*1E3*(d-Yc)/Ic+Mb*1E3*Yt/Iyy)*1E3
             =-0.057565 N/mm²
Stress at bottom of precast concrete beam:
       fbpbds=(F/(Ai*mr+Ac)-Mc*1E3*Yc/Ic-Mb*1E3*Yb/Iyy)*1E3
             =0.018331 N/mm²
```

Loading Combination 1

```
(no tensile stress permitted in precast beam)
Characteristic bending moment     c1b(1)=3000 kNm
```

Loading	Loading Combination 1 Stresses N/mm²			
	Top of in-situ	Top of Beam	Bottom of in-situ	Bottom of Beam
Prestress,beam and in-situ	0	8.0622	0	7.6222
Dif. shrinkage	-0.065071	-0.057565	0.13572	0.018331
Combination 1	6.6061	5.4098	5.1481	-7.3171
Total	6.5411	13.414	5.2838	0.32343

Loading Combination 1 - Stresses

Loading Combination 2

(tensile stress permitted (no visible cracking))
Characteristic bending moment c2b(1)=3500 kNm

Loading	Loading Combination 2 Stresses N/mm²			
	Top of in-situ	Top of Beam	Bottom of in-situ	Bottom of Beam
Prestress,beam and in-situ	0	8.0622	0	7.6222
Dif. shrinkage	-0.065071	-0.057565	0.13572	0.018331
Combination 2	7.0065	5.7377	5.4601	-8.5367
Total	6.9414	13.742	5.5958	-0.8961

Loading Combination 2 - Stresses

NOTE: The stresses from temperature differences should be added to the total stresses.

Top of in-situ concrete:
Compressive stress 6.9414 N/mm² is less than the maximum allowable stress of 0.6*fckc=19.2 N/mm².
Top of beam:
Compressive stress 13.742 N/mm² is less than the maximum allowable stress of 0.6*fck=24 N/mm².
Bottom of in-situ concrete:
Compressive stress 5.5958 N/mm² is less than the maximum allowable stress of 0.6*fckc=19.2 N/mm².
Bottom of beam:
Tensile stress 0.8961 N/mm² is less than the maximum allowable tensile stress of 3.0263 N/mm².

Copyright 1986-2024 Fitzroy Systems Ltd.

Location: Ex2 - 24.5 metre span SY2 beam

Precast prestressed concrete SY beams with in-situ top slab

Calculations for stresses at the Serviceability Limit State (SLS) in accordance with BS EN 1992-2:2005 and NA to BS EN 1992-2:2005.

Beam span under consideration span=24.5 m

Beam SY 2 section properties

Depth of beam	d=1600 mm
Cross-sectional area	Ac=580992 mm²
Centroid above soffit	Yb=650.06 mm
Section modulus top	Zt=153.97E6 mm³
Section modulus bottom	Zb=224.96E6 mm³
Unit weight of beam	uwb=24.5 kN/m³

Concrete compressive strengths

Characteristic cylinder strength	fcki=28 N/mm² (transfer)
Characteristic cylinder strength	fck=36 N/mm²

Concrete moduli (short-term)

Concrete modulus of elasticity	Ecmi=32 kN/mm² (transfer)
Concrete modulus of elasticity	Ecmb=34 kN/mm²

Composite section properties

Char strength (in-situ concrete)	fckc=35 N/mm²
Short-term modulus of elasticity for in-situ concrete	Ecmc=34 kN/mm²

Item No. 1

X co-ordinate	X(1)=500 mm
Y co-ordinate	Y(1)=0 mm
X co-ordinate	X(2)=1250 mm
Y co-ordinate	Y(2)=0 mm
X co-ordinate	X(3)=1245 mm
Y co-ordinate	Y(3)=252 mm
X co-ordinate	X(4)=975 mm
Y co-ordinate	Y(4)=429 mm
X co-ordinate	X(5)=1035 mm
Y co-ordinate	Y(5)=1550 mm
X co-ordinate	X(6)=995 mm
Y co-ordinate	Y(6)=1550 mm
X co-ordinate	X(7)=995 mm
Y co-ordinate	Y(7)=1570 mm
X co-ordinate	X(8)=1800 mm
Y co-ordinate	Y(8)=1570 mm
X co-ordinate	X(9)=1800 mm
Y co-ordinate	Y(9)=1900 mm

X co-ordinate	X(10)=1300 mm
Y co-ordinate	Y(10)=1900 mm
X co-ordinate	X(11)=1300 mm
Y co-ordinate	Y(11)=1800 mm
X co-ordinate	X(12)=0 mm
Y co-ordinate	Y(12)=1800 mm
X co-ordinate	X(13)=0 mm
Y co-ordinate	Y(13)=1570 mm
X co-ordinate	X(14)=755 mm
Y co-ordinate	Y(14)=1570 mm
X co-ordinate	X(15)=755 mm
Y co-ordinate	Y(15)=1550 mm
X co-ordinate	X(16)=715 mm
Y co-ordinate	Y(16)=1550 mm
X co-ordinate	X(17)=775 mm
Y co-ordinate	Y(17)=429 mm
X co-ordinate	X(18)=505 mm
Y co-ordinate	Y(18)=252 mm
X co-ordinate	X(19)=500 mm
Y co-ordinate	Y(19)=0 mm
Depth of composite section	di=1900 mm
Area of in-situ concrete	Ai=450198 mm²
Centroid of in-situ concrete	Yi=1713.4 mm
Modulus of elasticity (strand)	Ep=195 kN/mm²

Cross-section 1

Distance from mid-span of beam	csd(1)=5.6 m
Number of layers of strand	nls(1)=4
Height above soffit	ds(1)=60 mm
Number of strands	ns(1)=8
Height above soffit	ds(2)=110 mm
Number of strands	ns(2)=8
Height above soffit	ds(3)=160 mm
Number of strands	ns(3)=10
Height above soffit	ds(4)=596 mm
Number of strands	ns(4)=2

Short Term Losses (BS EN 1992-1-1)

Relaxation at transfer (%)	str=0.9

Summary

Loss	Loss of Force kN	% Loss
Relaxation	22.68	0.9
Elastic Shortening	105.38	4.1819
Transfer Total	128.06	5.0819

Losses at Transfer

Initial force	2520 kN

Force at transfer Pt=P0-loft=2391.9 kN

Loading	Stresses at Transfer N/mm²		
	Top of Beam	Bottom of Beam	Centroid of Strands
Prestress Self weight of Beam	-3.6794 5.4879	9.4522 -3.7554	8.2352 -2.8988
Total	1.8084	5.6968	5.3364

Beam Concrete Stresses at Transfer

Stress Limitations (BS EN 1992-1-1, Clause 5.10.2.2)

Top of beam:
Compressive stress 1.8084 N/mm² is less than allowable stresses of 0.7*fcki=19.6 N/mm² and 0.6*fck=21.6 N/mm².
Bottom of beam:
Compressive stress 5.6968 N/mm² is less than allowable stresses of 0.7*fcki=19.6 N/mm² and 0.6*fck=21.6 N/mm².

Long Term Losses (BS EN 1992-1-1, Clause 5.10.6(1))

Relaxation after transfer(%) slr(1)=0.6
Shrinkage per unit length sul(1)=0.3E-3
Creep coefficient φ(∞,to) crf=2

Summary

Loss	Loss of Force kN	% Loss
Relaxation Elastic Shortening	22.68 105.38	0.9 4.1819
Transfer Total	128.06	5.0819
Relaxation Shrinkage Creep	15.12 122.85 128.54	0.6 4.875 5.101
Long-term Total	266.51	10.576
All Losses	394.58	15.658

Losses - Long term

Initial force 2520 kN
Final force Pf=P0-loftl=2125.4 kN

Unit-weight of in-situ concrete wc=24 kN/m³

Loading	Final Stresses N/mm²		
	Top of Beam	Bottom of Beam	Centroid of Strands
Prestress	-3.2695	8.399	7.3176
Self weight of Beam	5.4879	-3.7554	-2.8988
In-situ concrete	4.1656	-2.8506	-2.2004
Total	6.384	1.793	2.2185

Beam concrete stresses - Long term

Composite section

Height from beam soffit to
bottom of in-situ concrete hsis=1570 mm
Perc'age of shrinkage remaining ps=45 %
Percentage pcr=45 %
Percentage stT=50 %
The net moment is Mc=F*e/1E3-Mb=29.445 kNm
Stress at top of in-situ concrete:
ftisds=-(F/(Ai*mr)-F/(Ai*mr+Ac)-Mc*1E3*(di-Yc)/Ic)*mr*1E3
=0.56887 N/mm²
Stress at bottom of in-situ concrete:
fbisds=-(F/(Ai*mr)-F/(Ai*mr+Ac)-Mc*1E3*(hsis-Yc)/Ic)*mr*1E3
=0.54644 N/mm²
Stress at top of precast concrete beam:
ftpbds=(F/(Ai*mr+Ac)+Mc*1E3*(d-Yc)/Ic+Mb*1E3*Yt/Iyy)*1E3
=-2.1606 N/mm²
Stress at bottom of precast concrete beam:
fbpbds=(F/(Ai*mr+Ac)-Mc*1E3*Yc/Ic-Mb*1E3*Yb/Iyy)*1E3
=0.75265 N/mm²

Loading Combination 1

(no tensile stress permitted in precast beam)
Characteristic bending moment c1b(1)=600 kNm

Loading	Loading Combination 1 Stresses N/mm²			
	Top of in-situ	Top of Beam	Bottom of in-situ	Bottom of Beam
Prestress,beam and in-situ	0	6.384	0	1.793
Dif. shrinkage	0.56887	-2.1606	0.54644	0.75265
Combination 1	1.2692	0.78459	0.73613	-1.5429
Total	1.8381	5.008	1.2826	1.0027

Loading Combination 1 - Stresses

Loading Combination 2

(tensile stress permitted (no visible cracking))
Characteristic bending moment c2b(1)=1000 kNm

Loading	Loading Combination 2 Stresses N/mm²			
	Top of in-situ	Top of Beam	Bottom of in-situ	Bottom of Beam
Prestress,beam and in-situ	0	6.384	0	1.793
Dif. shrinkage	0.56887	-2.1606	0.54644	0.75265
Combination 2	1.8132	1.1208	1.0516	-2.5715
Total	2.382	5.3443	1.5981	-0.025901

Loading Combination 2 - Stresses

NOTE: The stresses from temperature differences should be added to the total stresses.

Top of in-situ concrete:
Compressive stress 2.382 N/mm² is less than the maximum allowable stress of 0.6*fckc=21 N/mm².
Top of beam:
Compressive stress 5.3443 N/mm² is less than the maximum allowable stress of 0.6*fck=21.6 N/mm².
Bottom of in-situ concrete:
Compressive stress 1.5981 N/mm² is less than the maximum allowable stress of 0.6*fckc=21 N/mm².
Bottom of beam:
Tensile stress 0.025901 N/mm² is less than the maximum allowable tensile stress of 2.9399 N/mm².

Location: Ex3 - 40.0 metre span SY6 beam

Precast prestressed concrete SY beams with in-situ top slab

Calculations for stresses at the Serviceability Limit State (SLS) in accordance with BS EN 1992-2:2005 and NA to BS EN 1992-2:2005.

Beam span under consideration span=40 m

Beam SY 6 section properties

Depth of beam	d=2000 mm
Cross-sectional area	Ac=708992 mm²
Centroid above soffit	Yb=855.36 mm
Section modulus top	Zt=247.88E6 mm³
Section modulus bottom	Zb=331.64E6 mm³
Unit weight of beam	uwb=25 kN/m³

Concrete compressive strengths

Characteristic cylinder strength	fcki=35 N/mm² (transfer)
Characteristic cylinder strength	fck=40 N/mm²

Concrete moduli (short-term)

Concrete modulus of elasticity	Ecmi=34 kN/mm² (transfer)
Concrete modulus of elasticity	Ecmb=35 kN/mm²

Composite section properties

Char strength (in-situ concrete)	fckc=35 N/mm²
Short-term modulus of elasticity for in-situ concrete	Ecmc=34 kN/mm²

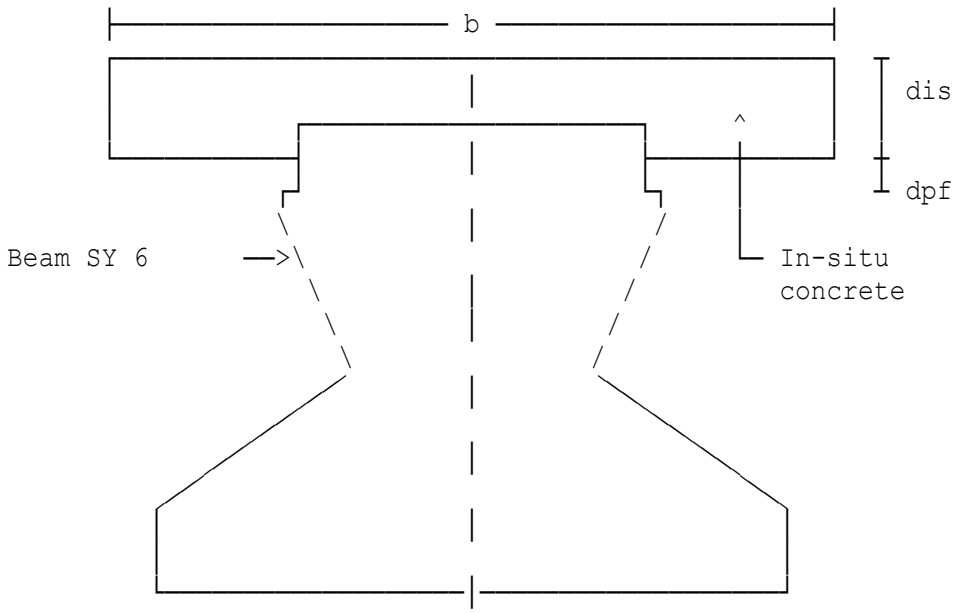

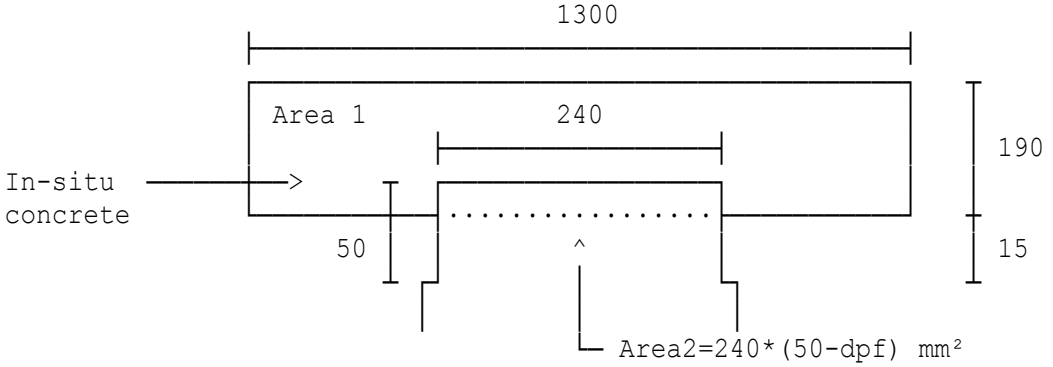

Second moment of area:
Ic=Iyy+Ac*(Yb-Yc)^2+mr*(Ii+Ai*(Yi-Yc)^2)=544.6E9 mm⁴
Depth of composite section di=2155 mm
Modulus of elasticity (strand) Ep=195 kN/mm²

Cross-section 1

Distance from mid-span of beam csd(1)=9.4 m
Number of layers of strand nls(1)=4
Height above soffit ds(1)=55 mm
Number of strands ns(1)=10

WARNING:
Strand location is non-standard.

Height above soffit ds(2)=110 mm
Number of strands ns(2)=13

WARNING:
Number of strands exceeds maximum for this location.

Height above soffit ds(3)=165 mm
Number of strands ns(3)=8

WARNING:
Strand location is non-standard.

Height above soffit ds(4)=600 mm

WARNING:
Height of strand above soffit exceeds maximum 596.

Number of strands ns(4)=2

WARNING:
Strand location is non-standard.

Bending moment from temp.loads tlb(1)=423 kNm
Bending moment from other loads olb(1)=367 kNm

Short Term Losses (BS EN 1992-1-1)

Relaxation at transfer (%) str=0.5

Summary

Loss	Loss of Force kN	% Loss
Relaxation	24.75	0.5
Elastic Shortening	414.03	8.3643
Transfer Total	438.78	8.8643

Losses at Transfer

Initial force 4950 kN
Force at transfer Pt=P0-loft=4511.2 kN

Loading	Stresses at Transfer N/mm²		
	Top of Beam	Bottom of Beam	Centroid of Strands
Prestress	-6.7251	16.143	14.584
Self weight of Beam	11.144	-8.3279	-7.0003
Temporary Loads	1.7068	-1.2755	-1.0721
Other Loads	1.4809	-1.1066	-0.9302
Total	7.607	5.4331	5.5814

Beam Concrete Stresses at Transfer

Stress Limitations (BS EN 1992-1-1, Clause 5.10.2.2)

Top of beam:
Compressive stress 7.607 N/mm² is less than allowable stresses of 0.7*fcki=24.5 N/mm² and 0.6*fck=24 N/mm².
Bottom of beam:
Compressive stress 5.4331 N/mm² is less than allowable stresses of 0.7*fcki=24.5 N/mm² and 0.6*fck=24 N/mm².

Long Term Losses (BS EN 1992-1-1, Clause 5.10.6(1))

Relaxation after transfer(%) slr(1)=0.4
Shrinkage per unit length sul(1)=0.3E-3
Creep coefficient φ(∞,to) crf=2

Summary

Loss	Loss of Force kN	% Loss
Relaxation Elastic Shortening	24.75 414.03	0.5 8.3643
Transfer Total	438.78	8.8643
Relaxation Shrinkage Creep	19.8 289.58 366.99	0.4 5.85 7.4139
Long-term Total	676.36	13.664
All Losses	1115.1	22.528

Losses - Long term

Initial force 4950 kN
Final force Pf=P0-loftl=3834.9 kN

Unit-weight of in-situ concrete wc=23.6 kN/m³

Loading	Final Stresses N/mm²		
	Top of Beam	Bottom of Beam	Centroid of Strands
Prestress Self weight of Beam In-situ concrete	-5.7168 11.144 3.5405	13.723 -8.3279 -2.6457	12.397 -7.0003 -2.2239
Total	8.968	2.7492	3.1732

Beam concrete stresses - Long term

Composite section

Height from beam soffit to
bottom of in-situ concrete hsis=1965 mm
Perc'age of shrinkage remaining ps=40 %
Percentage pcr=40 %
Percentage stT=67 %
The net moment is Mc=F*e/1E3-Mb=181.7 kNm
Stress at top of in-situ concrete:
ftisds=-(F/(Ai*mr)-F/(Ai*mr+Ac)-Mc*1E3*(di-Yc)/Ic)*mr*1E3
=1.4448 N/mm²
Stress at bottom of in-situ concrete:
fbisds=-(F/(Ai*mr)-F/(Ai*mr+Ac)-Mc*1E3*(hsis-Yc)/Ic)*mr*1E3
=1.3814 N/mm²
Stress at top of precast concrete beam:

ftpbds=(F/(Ai*mr+Ac)+Mc*1E3*(d-Yc)/Ic+Mb*1E3*Yt/Iyy)*1E3
=-2.1204 N/mm²

Stress at bottom of precast concrete beam:
fbpbds=(F/(Ai*mr+Ac)-Mc*1E3*Yc/Ic-Mb*1E3*Yb/Iyy)*1E3=0.7531 N/mm²

Loading Combination 1

(no tensile stress permitted in precast beam)
Characteristic bending moment c1b(1)=1900 kNm

Loading	Loading Combination 1 Stresses N/mm²			
	Top of in-situ	Top of Beam	Bottom of in-situ	Bottom of Beam
Prestress,beam and in-situ	0	8.968	0	2.7492
Dif. shrinkage	1.4448	-2.1204	1.3814	0.7531
Combination 1	3.6564	3.0871	2.9586	-4.0448
Total	5.1011	9.9347	4.34	-0.5425

Loading Combination 1 - Stresses

WARNING:
Bottom of beam:
Tensile stress 0.5425 N/mm² exceeds maximum allowable tensile stress of 0 N/mm².

Loading Combination 2

(tensile stress permitted (no visible cracking))
Characteristic bending moment c2b(1)=2200 kNm

Loading	Loading Combination 2 Stresses N/mm²			
	Top of in-situ	Top of Beam	Bottom of in-situ	Bottom of Beam
Prestress,beam and in-situ	0	8.968	0	2.7492
Dif. shrinkage	1.4448	-2.1204	1.3814	0.7531
Combination 2	4.022	3.3959	3.2545	-4.6835
Total	5.4668	10.243	4.6359	-1.1812

Loading Combination 2 - Stresses

NOTE: The stresses from temperature differences should be added to the total stresses.

Top of in-situ concrete:
Compressive stress 5.4668 N/mm² is less than the maximum allowable stress of 0.6*fckc=21 N/mm².
Top of beam:
Compressive stress 10.243 N/mm² is less than the maximum allowable stress of 0.6*fck=24 N/mm².
Bottom of in-situ concrete:
Compressive stress 4.6359 N/mm² is less than the maximum allowable stress of 0.6*fckc=21 N/mm².
Bottom of beam:
Tensile stress 1.1812 N/mm² is less than the maximum allowable tensile stress of 3.0263 N/mm².

Location: Ex1 - 20 metre span YE beam

Precast prestressed concrete YE beams with in-situ top slab

Calculations for stresses at the Serviceability Limit State (SLS) to BS5400-4:1990 implemented by DOT Departmental Standard BD 44/15.

Span of beam span=20 m

Beam YE 4 section properties

Depth of beam d=1000 mm
Cross-sectional area Ac=577926 mm²
Centroid above soffit Yb=463.07 mm
Section modulus top Zt=95.2E6 mm³
Section modulus bottom Zb=110.33E6 mm³
Unit weight of beam uwb=24 kN/m³

Concrete strengths

Strength at transfer fci=40 N/mm²
Characteristic strength fcu=50 N/mm²

Concrete moduli

Modulus of elasticity at transfer for concrete strength 40 N/mm² is:
Eci=31 kN/mm²
Modulus of elasticity for concrete strength 50 N/mm² is:
Ecb=34 kN/mm²

Composite section properties

Char strength (in-situ concrete) fcuc=40 N/mm²
Modulus of elasticity for concrete strength 40 N/mm² is:
Ecc=31 kN/mm²

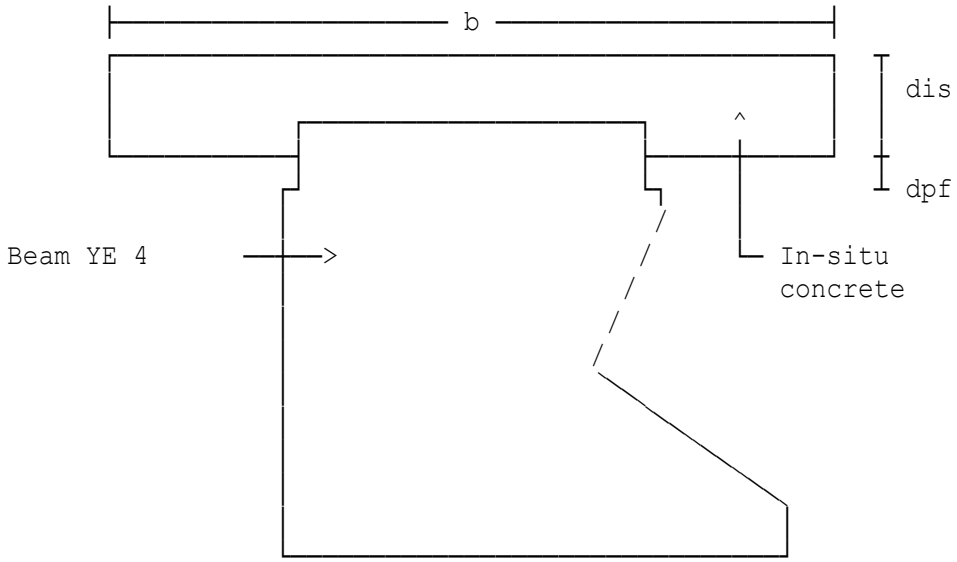

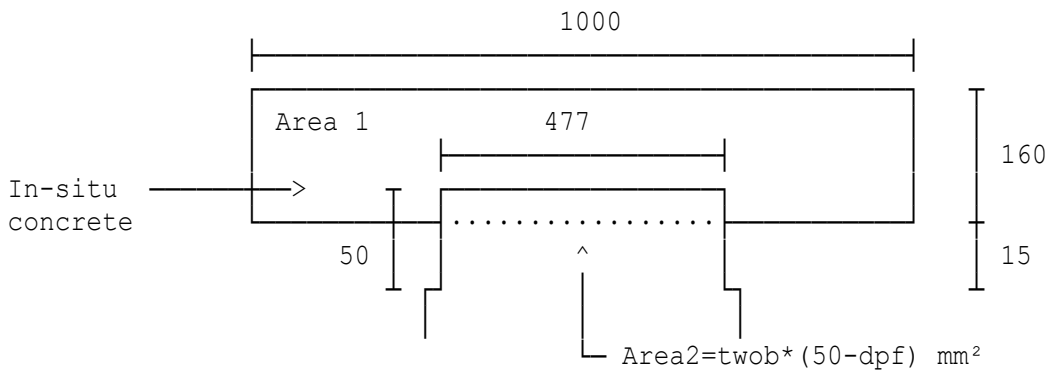

Second moment of area:
Ic=Ixx+Ac*(Yb-Yc)^2+mr*(Ii+Ai*(Yi-Yc)^2)=91.223E9 mm⁴

Depth of composite section	di=1125 mm
Initial force	if=174 kN
Modulus of elasticity	Es=200 kN/mm²

Cross-section 1

Distance from mid-span of beam	csd(1)=0 m
Number of layers of strand	nls(1)=4
Height above soffit	ds(1)=60 mm
Number of strands	ns(1)=11
Height above soffit	ds(2)=110 mm
Number of strands	ns(2)=14
Height above soffit	ds(3)=800 mm
Number of strands	ns(3)=2
Height above soffit	ds(4)=900 mm
Number of strands	ns(4)=2

Short Term Losses

Relaxation at transfer (%)	str=1

Summary

Loss	Loss of Force kN	% Loss
Relaxation	50.46	1
Elastic Shortening	410.13	8.1278
Transfer Total	460.59	9.1278

Losses at Transfer

Initial force	5046 kN
Force at transfer	Pt=P0-loft=4585.4 kN

Loading	Stresses at Transfer N/mm²		
	Top of Beam	Bottom of Beam	Centroid of Strands
Prestress Self weight of Beam	-5.0754 7.2884	19.154 -6.2858	14.475 -3.6646
Total	2.213	12.869	10.811

Beam Concrete Stresses at Transfer

Stress Limitations

Top of beam:
Compressive stress 2.213 N/mm² is less than allowable stresses of 0.5*fci=20 N/mm² and 0.4*fcu=20 N/mm².
Bottom of beam:
Compressive stress 12.869 N/mm² is less than allowable stresses of 0.5*fci=20 N/mm² and 0.4*fcu=20 N/mm².

Long Term Losses

Relaxation after transfer(%) slr(1)=2
Shrinkage per unit length sul(1)=0.3E-3

Summary

Loss	Loss of Force kN	% Loss
Relaxation Elastic Shortening	50.46 410.13	1 8.1278
Transfer Total	460.59	9.1278
Relaxation Shrinkage Creep	100.92 241.86 418.36	2 4.7931 8.2908
Long-term Total	761.14	15.084
All Losses	1221.7	24.212

Losses - Long term

Initial force 5046 kN
Final force Pf=P0-loftl=3824.3 kN

Unit-weight of in-situ concrete wc=24 kN/m³

Loading	Final Stresses N/mm²		
	Top of Beam	Bottom of Beam	Centroid of Strands
Prestress	-4.2329	15.975	12.073
Self weight of Beam	7.2884	-6.2858	-3.6646
In-situ concrete	1.8073	-1.5587	-0.90868
Total	4.8627	8.1304	7.4994

Beam concrete stresses - Long term

Composite section

Height from beam soffit to
bottom of in-situ concrete hsis=965 mm
Perc'age of shrinkage remaining ps=25 %
Percentage pcr=25 %
Percentage stT=67 %
The net moment is Mc=F*e/1E3-Mb=-31.103 kNm
Stress at top of in-situ concrete:
ftisds=-(F/(Ai*mr)-F/(Ai*mr+Ac)-Mc*1E3*(di-Yc)/Ic)*mr*1E3
=-0.8043 N/mm²
Stress at bottom of in-situ concrete:
fbisds=-(F/(Ai*mr)-F/(Ai*mr+Ac)-Mc*1E3*(hsis-Yc)/Ic)*mr*1E3
=-0.74975 N/mm²
Stress at top of precast concrete beam:
ftpbds=(F/(Ai*mr+Ac)+Mc*1E3*(d-Yc)/Ic+Mb*1E3*Yt/Ixx)*1E3
=0.88597 N/mm²
Stress at bottom of precast concrete beam:
fbpbds=(F/(Ai*mr+Ac)-Mc*1E3*Yc/Ic-Mb*1E3*Yb/Ixx)*1E3=-0.4041 N/mm²

Combination 1 loading

Applied bending moment c1b(1)=1000 kNm

Loading	Combination 1 Stresses N/mm²			
	Top of in-situ	Top of Beam	Bottom of in-situ	Bottom of Beam
Prestress,beam and in-situ	0	4.8627	0	8.1304
Dif. shrinkage	-0.8043	0.88597	-0.74975	-0.4041
Combination 1	7.1673	5.523	5.0626	-6.3596
Total	6.363	11.272	4.3129	1.3667

Combination 1 Loading - Stresses

Combination 2 to 5 loading

Applied bending moment c2b(1)=1500 kNm

Loading	Combination 2 to 5 Stresses N/mm²			
	Top of in-situ	Top of Beam	Bottom of in-situ	Bottom of Beam
Prestress,beam and in-situ	0	4.8627	0	8.1304
Dif. shrinkage	-0.8043	0.88597	-0.74975	-0.4041
Combination 2-5	8.9592	6.9038	6.3283	-9.5394
Total	8.1549	12.652	5.5785	-1.8131

Combination 2 to 5 Loading - Stresses

Combination 3 loading. The stresses from the Proforma for temperature differences should be added to the total stresses.

Top of in-situ concrete:
Compressive stress 8.1549 N/mm² is less than the maximum allowable stress of 0.5*fcuc=20 N/mm².
Top of beam:
Compressive stress 12.652 N/mm² is less than the maximum allowable stress of 0.4*fcu=20 N/mm².
Bottom of in-situ concrete:
Compressive stress 5.5785 N/mm² is less than the maximum allowable stress of 0.5*fcuc=20 N/mm².
Bottom of beam:
Tensile stress 1.8131 N/mm² is less than the maximum allowable tensile stress of 3.182 N/mm².

Location: Ex2 - 29.5 metre span YE8 beam

Precast prestressed concrete YE beams with in-situ top slab

Calculations for stresses at the Serviceability Limit State (SLS) to BS5400-4:1990 implemented by DOT Departmental Standard BD 44/15.

Span of beam span=29.5 m

Beam YE 8 section properties

Depth of beam d=1400 mm
Cross-sectional area Ac=815050 mm²
Centroid above soffit Yb=676.56 mm
Section modulus top Zt=200.07E6 mm³
Section modulus bottom Zb=213.93E6 mm³
Unit weight of beam uwb=24.5 kN/m³

Concrete strengths

Strength at transfer fci=40 N/mm²
Characteristic strength fcu=52.5 N/mm²

Concrete moduli

Modulus of elasticity at transfer for concrete strength 40 N/mm² is:
Eci=31 kN/mm²
Modulus of elasticity for concrete strength 52.5 N/mm² is:
Ecb=34.5 kN/mm²

Composite section properties

Char strength (in-situ concrete) fcuc=40 N/mm²
Modulus of elasticity for concrete strength 40 N/mm² is:
Ecc=31 kN/mm²

Item No. 1

Item weighting iw1=0.89855
X co-ordinate X(1)=500 mm
Y co-ordinate Y(1)=0 mm
X co-ordinate X(2)=1250 mm
Y co-ordinate Y(2)=0 mm
X co-ordinate X(3)=1250 mm
Y co-ordinate Y(3)=202 mm
X co-ordinate X(4)=975 mm
Y co-ordinate Y(4)=379 mm
X co-ordinate X(5)=1115 mm
Y co-ordinate Y(5)=1350 mm
X co-ordinate X(6)=1615 mm
Y co-ordinate Y(6)=1350 mm
X co-ordinate X(7)=1615 mm
Y co-ordinate Y(7)=1550 mm
X co-ordinate X(8)=500 mm

Y co-ordinate	Y(8)=1550 mm
X co-ordinate	X(9)=500 mm
Y co-ordinate	Y(9)=1650 mm
X co-ordinate	X(10)=0 mm
Y co-ordinate	Y(10)=1650 mm
X co-ordinate	X(11)=0 mm
Y co-ordinate	Y(11)=1350 mm
X co-ordinate	X(12)=500 mm
Y co-ordinate	Y(12)=1350 mm
X co-ordinate	X(13)=500 mm
Y co-ordinate	Y(13)=0 mm

Item No. 2

Second moment of area	IXX2=144.74E9 mm^4
Area of item	A2=815050 mm^2
Centroid from X-X axis	YC2=676.56 mm
Item weighting	iw2=0.10145
Depth of composite section	di=1650 mm
Initial force	if=200 kN
Modulus of elasticity	Es=200 kN/mm^2

Cross-section 1

Distance from mid-span of beam	csd(1)=9.75 m
Number of layers of strand	nls(1)=4
Height above soffit	ds(1)=60 mm
Number of strands	ns(1)=10
Height above soffit	ds(2)=110 mm
Number of strands	ns(2)=12
Height above soffit	ds(3)=210 mm
Number of strands	ns(3)=8
Height above soffit	ds(4)=1200 mm
Number of strands	ns(4)=2

Short Term Losses

Relaxation at transfer (%)	str=1.5

Summary

Loss	Loss of Force kN	% Loss
Relaxation	96	1.5
Elastic Shortening	618.34	9.6615
Transfer Total	714.34	11.162

Losses at Transfer

Initial force	6400 kN
Force at transfer	Pt=P0-loft=5685.7 kN

Loading	Stresses at Transfer N/mm²		
	Top of Beam	Bottom of Beam	Centroid of Strands
Prestress Self weight of Beam	-6.9226 6.1134	19.974 -5.7172	16.372 -4.1328
Total	-0.80927	14.256	12.239

Beam Concrete Stresses at Transfer

Stress Limitations

Top of beam:
The flexural tensile stress of 0.80927 N/mm² at transfer is less than the permissible value of 1 N/mm². Clause 6.3.2.4(b)(1).
Bottom of beam:
Compressive stress 14.256 N/mm² is less than allowable stresses of 0.5*fci=20 N/mm² and 0.4*fcu=21 N/mm².

Long Term Losses

Relaxation after transfer(%) slr(1)=1
Shrinkage per unit length sul(1)=0.3E-3

Summary

Loss	Loss of Force kN	% Loss
Relaxation Elastic Shortening	96 618.34	1.5 9.6615
Transfer Total	714.34	11.162
Relaxation Shrinkage Creep	64 316.8 641.83	1 4.95 10.029
Long-term Total	1022.6	15.979
All Losses	1737	27.14

Losses - Long term

Initial force 6400 kN
Final force Pf=P0-loftl=4663 kN

Unit-weight of in-situ concrete wc=24 kN/m³

Loading	Final Stresses N/mm²		
	Top of Beam	Bottom of Beam	Centroid of Strands
Prestress	-5.6775	16.381	13.427
Self weight of Beam	6.1134	-5.7172	-4.1328
In-situ concrete	2.55	-2.3848	-1.7239
Total	2.9859	8.2792	7.5703

Beam concrete stresses - Long term

Composite section

Height from beam soffit to
bottom of in-situ concrete hsis=1350 mm
Perc'age of shrinkage remaining ps=45 %
Percentage pcr=45 %
Percentage stT=60 %
The net moment is Mc=F*e/1E3-Mb=-797.1 kNm
Stress at top of in-situ concrete:
ftisds=-(F/(Ai*mr)-F/(Ai*mr+Ac)-Mc*1E3*(di-Yc)/Ic)*mr*1E3
=-0.78066 N/mm²
Stress at bottom of in-situ concrete:
fbisds=-(F/(Ai*mr)-F/(Ai*mr+Ac)-Mc*1E3*(hsis-Yc)/Ic)*mr*1E3
=-0.043479 N/mm²
Stress at top of precast concrete beam:
ftpbds=(F/(Ai*mr+Ac)+Mc*1E3*(d-Yc)/Ic+Mb*1E3*Yt/Ixx)*1E3
=0.67508 N/mm²
Stress at bottom of precast concrete beam:
fbpbds=(F/(Ai*mr+Ac)-Mc*1E3*Yc/Ic-Mb*1E3*Yb/Ixx)*1E3=-0.34487 N/mm²

Combination 1 loading

Applied bending moment c1b(1)=1750 kNm

Loading	Combination 1 Stresses N/mm²			
	Top of in-situ	Top of Beam	Bottom of in-situ	Bottom of Beam
Prestress,beam and in-situ	0	2.9859	0	8.2792
Dif. shrinkage	-0.78066	0.67508	-0.043479	-0.34487
Combination 1	4.4095	3.2777	2.6523	-5.3866
Total	3.6289	6.9387	2.6088	2.5477

Combination 1 Loading - Stresses

Combination 2 to 5 loading

Applied bending moment c2b(1)=2100 kNm

Loading	Combination 2 to 5 Stresses N/mm²			
	Top of in-situ	Top of Beam	Bottom of in-situ	Bottom of Beam
Prestress,beam and in-situ	0	2.9859	0	8.2792
Dif. shrinkage	-0.78066	0.67508	-0.043479	-0.34487
Combination 2-5	4.8737	3.6227	2.9315	-6.4639
Total	4.093	7.2837	2.888	1.4704

Combination 2 to 5 Loading - Stresses

Combination 3 loading. The stresses from the Proforma for temperature differences should be added to the total stresses.

Top of in-situ concrete:
Compressive stress 4.093 N/mm² is less than the maximum allowable stress of 0.5*fcuc=20 N/mm².
Top of beam:
Compressive stress 7.2837 N/mm² is less than the maximum allowable stress of 0.4*fcu=21 N/mm².
Bottom of in-situ concrete:
Compressive stress 2.888 N/mm² is less than the maximum allowable stress of 0.5*fcuc=20 N/mm².
Bottom of beam:
Compressive stress 1.4704 N/mm² is less than the maximum allowable stress of 0.4*fcu=21 N/mm².

Location: Ex3 - 15 metre span YE1 beam

Precast prestressed concrete YE beams with in-situ top slab

Calculations for stresses at the Serviceability Limit State (SLS) to BS5400-4:1990 implemented by DOT Departmental Standard BD 44/15.

Span of beam span=15 m

Beam YE 1 section properties

Depth of beam d=700 mm
Cross-sectional area Ac=414814 mm²
Centroid above soffit Yb=313.39 mm
Section modulus top Zt=43.53E6 mm³
Section modulus bottom Zb=53.7E6 mm³
Unit weight of beam uwb=24.5 kN/m³

Concrete strengths

Strength at transfer fci=37.5 N/mm²
Characteristic strength fcu=45 N/mm²

Concrete moduli

Modulus of elasticity at transfer for concrete strength 37.5 N/mm² is:
Eci=30.25 kN/mm²
Modulus of elasticity for concrete strength 45 N/mm² is:
Ecb=32.5 kN/mm²

Composite section properties

Char strength (in-situ concrete) fcuc=30 N/mm²
Modulus of elasticity for concrete strength 30 N/mm² is:
Ecc=28 kN/mm²

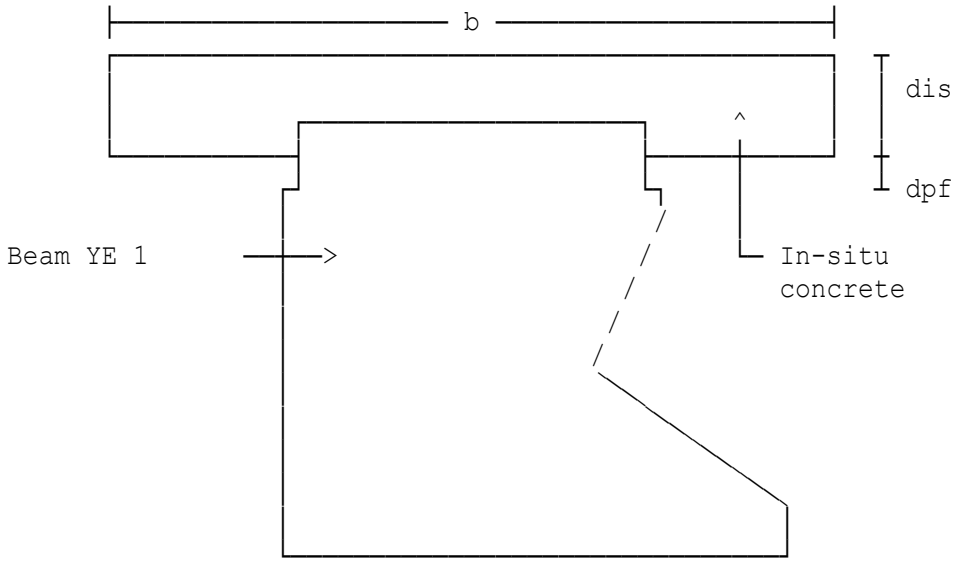

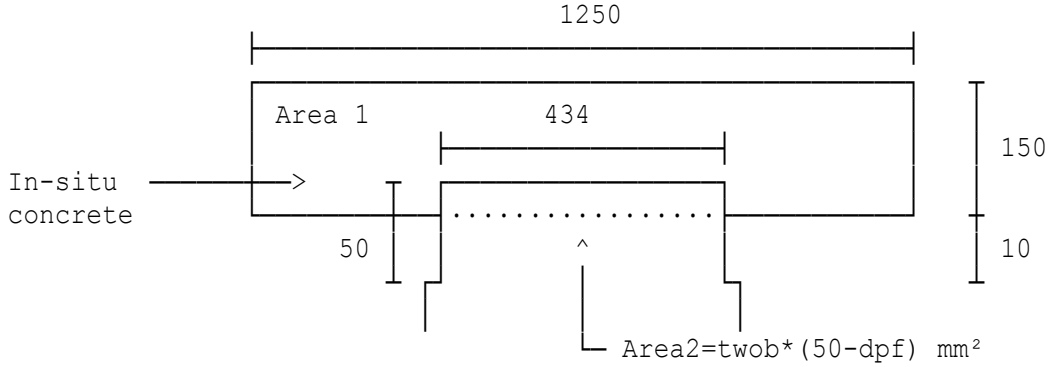

Transf'med second moment of area:
Ic=Ixx+Ac*(Yb-Yc)^2+mr*(Ii+Ai*(Yi-Yc)^2)=36.848E9 mm⁴

Depth of composite section	di=810 mm
Nominal diameter	nomd=12 mm
Nominal tensile strength	nomt=1600 N/mm²
Nominal steel area	noma=90 mm²
Characteristic breaking load	cbl=160 kN
Initial force per strand	if=100 kN
Modulus of elasticity	Es=200 kN/mm²

Cross-section 1

Distance from mid-span of beam	csd(1)=2.4 m
Number of layers of strand	nls(1)=3
Height above soffit	ds(1)=50 mm
Number of strands	ns(1)=8

WARNING:
Strand location is non-standard.

Height above soffit	ds(2)=100 mm
Number of strands	ns(2)=12

WARNING:
Strand location is non-standard.

Height above soffit	ds(3)=250 mm
Number of strands	ns(3)=6

WARNING:
Strand location is non-standard.

Bending moment from temp.loads	tlb(1)=166 kNm
Bending moment from other loads	olb(1)=191 kNm

Short Term Losses

Relaxation at transfer (%)	str=1

Summary

Loss	Loss of Force kN	% Loss
Relaxation	26	1
Elastic Shortening	185.21	7.1233
Transfer Total	211.21	8.1233

Losses at Transfer

Initial force 2600 kN
Force at transfer Pt=P0-loft=2388.8 kN

Loading	Stresses at Transfer N/mm²		
	Top of Beam	Bottom of Beam	Centroid of Strands
Prestress	-4.8962	14.396	11.11
Self weight of Beam	5.894	-4.7777	-2.96
Temporary Loads	3.8135	-3.0912	-1.9152
Other Loads	4.3878	-3.5568	-2.2036
Total	9.199	2.9699	4.0309

Beam Concrete Stresses at Transfer

Stress Limitations

Top of beam:
Compressive stress 9.199 N/mm² is less than allowable stresses of 0.5*fci=18.75 N/mm² and 0.4*fcu=18 N/mm².
Bottom of beam:
Compressive stress 2.9699 N/mm² is less than allowable stresses of 0.5*fci=18.75 N/mm² and 0.4*fcu=18 N/mm².

Long Term Losses

Relaxation after transfer(%) slr(1)=0.8
Shrinkage per unit length sul(1)=0.3E-3

Summary

Loss	Loss of Force kN	% Loss
Relaxation	26	1
Elastic Shortening	185.21	7.1233
Transfer Total	211.21	8.1233
Relaxation	20.8	0.8
Shrinkage	140.4	5.4
Creep	142.48	5.4799
Long-term Total	303.68	11.68
All Losses	514.88	19.803

Losses - Long term

Initial force 2600 kN
Final force Pf=P0-loftl=2085.1 kN

Unit-weight of in-situ concrete wc=24 kN/m³

Loading	Final Stresses N/mm²		
	Top of Beam	Bottom of Beam	Centroid of Strands
Prestress	-4.2738	12.566	9.6974
Self weight of Beam	5.894	-4.7777	-2.96
In-situ concrete	2.3681	-1.9196	-1.1893
Total	3.9883	5.8683	5.5481

Beam concrete stresses - Long term

Composite section

Height from beam soffit to
bottom of in-situ concrete hsis=660 mm
Perc'age of shrinkage remaining ps=50 %
Percentage pcr=50 %
Percentage stT=45 %
The net moment is Mc=F*e/1E3-Mb=-135.38 kNm
Stress at top of in-situ concrete:
ftisds=-(F/(Ai*mr)-F/(Ai*mr+Ac)-Mc*1E3*(di-Yc)/Ic)*mr*1E3
=-0.12934 N/mm²
Stress at bottom of in-situ concrete:
fbisds=-(F/(Ai*mr)-F/(Ai*mr+Ac)-Mc*1E3*(hsis-Yc)/Ic)*mr*1E3
=0.34545 N/mm²
Stress at top of precast concrete beam:

ftpbds=(F/(Ai*mr+Ac)+Mc*1E3*(d-Yc)/Ic+Mb*1E3*Yt/Ixx)*1E3
=-0.16662 N/mm²

Stress at bottom of precast concrete beam:
fbpbds=(F/(Ai*mr+Ac)-Mc*1E3*Yc/Ic-Mb*1E3*Yb/Ixx)*1E3=0.06801 N/mm²

Combination 1 loading

Applied bending moment c1b(1)=400 kNm

Loading	Combination 1 Stresses N/mm²			
	Top of in-situ	Top of Beam	Bottom of in-situ	Bottom of Beam
Prestress,beam and in-situ	0	3.9883	0	5.8683
Dif. shrinkage	-0.12934	-0.16662	0.34545	0.06801
Combination 1	5.4018	4.4788	3.2975	-4.6128
Total	5.2724	8.3005	3.643	1.3235

Combination 1 Loading - Stresses

Combination 2 to 5 loading

Applied bending moment c2b(1)=700 kNm

Loading	Combination 2 to 5 Stresses N/mm²			
	Top of in-situ	Top of Beam	Bottom of in-situ	Bottom of Beam
Prestress,beam and in-situ	0	3.9883	0	5.8683
Dif. shrinkage	-0.12934	-0.16662	0.34545	0.06801
Combination 2-5	6.3021	5.2253	3.8471	-8.0724
Total	6.1727	9.047	4.1926	-2.1361

Combination 2 to 5 Loading - Stresses

Combination 3 loading. The stresses from the Proforma for temperature differences should be added to the total stresses.

Top of in-situ concrete:
Compressive stress 6.1727 N/mm² is less than the maximum allowable stress of 0.5*fcuc=15 N/mm².
Top of beam:
Compressive stress 9.047 N/mm² is less than the maximum allowable stress of 0.4*fcu=18 N/mm².
Bottom of in-situ concrete:
Compressive stress 4.1926 N/mm² is less than the maximum allowable stress of 0.5*fcuc=15 N/mm².

Bottom of beam:
Tensile stress 2.1361 N/mm² is less than the maximum allowable tensile stress of 3.0187 N/mm².

Location: Ex1 - 20 metre span YE beam

Precast prestressed concrete YE beams with in-situ top slab

Calculations for stresses at the Serviceability Limit State (SLS) in accordance with BS EN 1992-2:2005 and NA to BS EN 1992-2:2005.

Beam span under consideration span=20 m

Beam YE 4 section properties

Depth of beam	d=1000 mm
Cross-sectional area	Ac=577926 mm²
Centroid above soffit	Yb=463.07 mm
Section modulus top	Zt=95.2E6 mm³
Section modulus bottom	Zb=110.33E6 mm³
Unit weight of beam	uwb=24 kN/m³

Concrete compressive strengths

Characteristic cylinder strength	fcki=32 N/mm² (transfer)
Characteristic cylinder strength	fck=40 N/mm²

Concrete moduli (short-term)

Concrete modulus of elasticity	Ecmi=33 kN/mm² (transfer)
Concrete modulus of elasticity	Ecmb=35 kN/mm²

Composite section properties

Char strength (in-situ concrete)	fckc=32 N/mm²
Short-term modulus of elasticity for in-situ concrete	Ecmc=33 kN/mm²

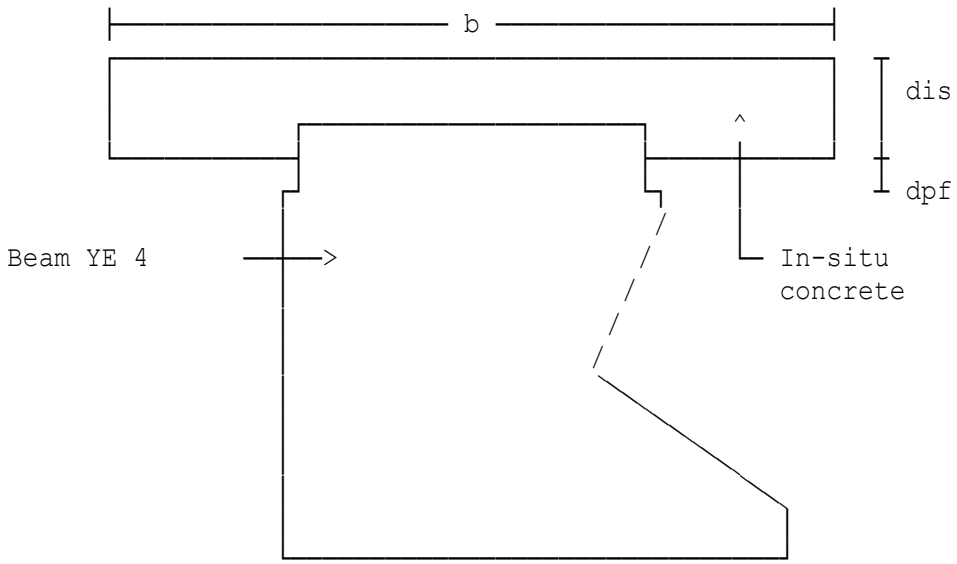

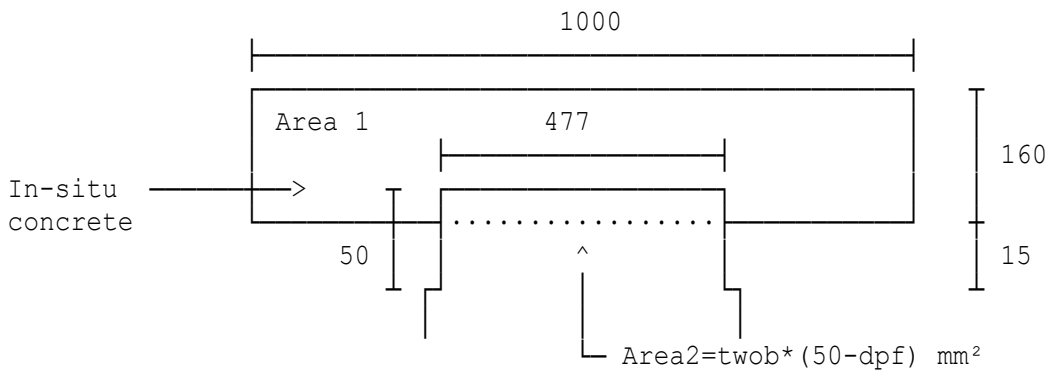

Second moment of area:
Ic=Iyy+Ac*(Yb-Yc)^2+mr*(Ii+Ai*(Yi-Yc)^2)=91.223E9 mm⁴
Depth of composite section di=1125 mm
Modulus of elasticity (strand) Ep=195 kN/mm²

Cross-section 1

Distance from mid-span of beam csd(1)=0 m
Number of layers of strand nls(1)=4
Height above soffit ds(1)=60 mm
Number of strands ns(1)=11
Height above soffit ds(2)=110 mm
Number of strands ns(2)=14
Height above soffit ds(3)=800 mm
Number of strands ns(3)=2
Height above soffit ds(4)=900 mm
Number of strands ns(4)=2

Short Term Losses (BS EN 1992-1-1)

Relaxation at transfer (%) str=1

Summary

Loss	Loss of Force kN	% Loss
Relaxation	50.46	1
Elastic Shortening	349.37	6.9237
Transfer Total	399.83	7.9237

Losses at Transfer

Initial force 5046 kN
Force at transfer Pt=P0-loft=4646.2 kN

Loading	Stresses at Transfer N/mm²		
	Top of Beam	Bottom of Beam	Centroid of Strands
Prestress Self weight of Beam	-5.1427 7.2884	19.408 -6.2858	14.667 -3.6646
Total	2.1457	13.122	11.003

Beam Concrete Stresses at Transfer

Stress Limitations (BS EN 1992-1-1, Clause 5.10.2.2)

Top of beam:
Compressive stress 2.1457 N/mm² is less than allowable stresses of 0.7*fcki=22.4 N/mm² and 0.6*fck=24 N/mm².
Bottom of beam:
Compressive stress 13.122 N/mm² is less than allowable stresses of 0.7*fcki=22.4 N/mm² and 0.6*fck=24 N/mm².

Long Term Losses (BS EN 1992-1-1, Clause 5.10.6(1))

Relaxation after transfer(%) slr(1)=2
Shrinkage per unit length sul(1)=0.3E-3
Creep coefficient φ(∞,to) crf=2

Summary

Loss	Loss of Force kN	% Loss
Relaxation Elastic Shortening	50.46 349.37	1 6.9237
Transfer Total	399.83	7.9237
Relaxation Shrinkage Creep	100.92 235.81 494.21	2 4.6733 9.794
Long-term Total	830.94	16.467
All Losses	1230.8	24.391

Losses - Long term

Initial force 5046 kN
Final force Pf=P0-loftl=3815.2 kN

Unit-weight of in-situ concrete wc=24 kN/m³

Loading	Final Stresses N/mm²		
	Top of Beam	Bottom of Beam	Centroid of Strands
Prestress	-4.2229	15.937	12.044
Self weight of Beam	7.2884	-6.2858	-3.6646
In-situ concrete	1.8073	-1.5587	-0.90868
Total	4.8727	8.0926	7.4709

Beam concrete stresses - Long term

Composite section

Height from beam soffit to
bottom of in-situ concrete hsis=965 mm
Perc'age of shrinkage remaining ps=25 %
Percentage pcr=25 %
Percentage stT=67 %
The net moment is Mc=F*e/1E3-Mb=-79.319 kNm
Stress at top of in-situ concrete:
ftisds=-(F/(Ai*mr)-F/(Ai*mr+Ac)-Mc*1E3*(di-Yc)/Ic)*mr*1E3
=-0.76325 N/mm²
Stress at bottom of in-situ concrete:
fbisds=-(F/(Ai*mr)-F/(Ai*mr+Ac)-Mc*1E3*(hsis-Yc)/Ic)*mr*1E3
=-0.62412 N/mm²
Stress at top of precast concrete beam:
ftpbds=(F/(Ai*mr+Ac)+Mc*1E3*(d-Yc)/Ic+Mb*1E3*Yt/Iyy)*1E3
=0.7972 N/mm²
Stress at bottom of precast concrete beam:
fbpbds=(F/(Ai*mr+Ac)-Mc*1E3*Yc/Ic-Mb*1E3*Yb/Iyy)*1E3
=-0.36425 N/mm²

Loading Combination 1

(no tensile stress permitted in precast beam)
Characteristic bending moment c1b(1)=1000 kNm

Loading	Loading Combination 1 Stresses N/mm²			
	Top of in-situ	Top of Beam	Bottom of in-situ	Bottom of Beam
Prestress,beam and in-situ	0	4.8727	0	8.0926
Dif. shrinkage	-0.76325	0.7972	-0.62412	-0.36425
Combination 1	7.1673	5.523	5.0626	-6.3596
Total	6.4041	11.193	4.4385	1.3688

Loading Combination 1 - Stresses

Loading Combination 2

(tensile stress permitted (no visible cracking))
Characteristic bending moment c2b(1)=1500 kNm

Loading	Loading Combination 2 Stresses N/mm²			
	Top of in-situ	Top of Beam	Bottom of in-situ	Bottom of Beam
Prestress,beam and in-situ	0	4.8727	0	8.0926
Dif. shrinkage	-0.76325	0.7972	-0.62412	-0.36425
Combination 2	8.9592	6.9038	6.3283	-9.5394
Total	8.1959	12.574	5.7041	-1.811

Loading Combination 2 - Stresses

NOTE: The stresses from temperature differences should be added to the total stresses.

Top of in-situ concrete:
Compressive stress 8.1959 N/mm² is less than the maximum allowable stress of 0.6*fckc=19.2 N/mm².
Top of beam:
Compressive stress 12.574 N/mm² is less than the maximum allowable stress of 0.6*fck=24 N/mm².
Bottom of in-situ concrete:
Compressive stress 5.7041 N/mm² is less than the maximum allowable stress of 0.6*fckc=19.2 N/mm².
Bottom of beam:
Tensile stress 1.811 N/mm² is less than the maximum allowable tensile stress of 3.0263 N/mm².

Copyright 1986-2024 Fitzroy Systems Ltd.

Location: Ex2 - 29.5 metre span YE8 beam

Precast prestressed concrete YE beams with in-situ top slab

Calculations for stresses at the Serviceability Limit State (SLS) in accordance with BS EN 1992-2:2005 and NA to BS EN 1992-2:2005.

Beam span under consideration span=29.5 m

Beam YE 8 section properties

Depth of beam	d=1400 mm
Cross-sectional area	Ac=815050 mm²
Centroid above soffit	Yb=676.56 mm
Section modulus top	Zt=200.07E6 mm³
Section modulus bottom	Zb=213.93E6 mm³
Unit weight of beam	uwb=24.5 kN/m³

Concrete compressive strengths

Characteristic cylinder strength	fcki=32 N/mm² (transfer)
Characteristic cylinder strength	fck=42 N/mm²

Concrete moduli (short-term)

Concrete modulus of elasticity	Ecmi=31 kN/mm² (transfer)
Concrete modulus of elasticity	Ecmb=36 kN/mm²

Composite section properties

Char strength (in-situ concrete)	fckc=32 N/mm²
Short-term modulus of elasticity for in-situ concrete	Ecmc=33 kN/mm²

Item No. 1

X co-ordinate	X(1)=500 mm
Y co-ordinate	Y(1)=0 mm
X co-ordinate	X(2)=1250 mm
Y co-ordinate	Y(2)=0 mm
X co-ordinate	X(3)=1250 mm
Y co-ordinate	Y(3)=202 mm
X co-ordinate	X(4)=975 mm
Y co-ordinate	Y(4)=379 mm
X co-ordinate	X(5)=1115 mm
Y co-ordinate	Y(5)=1350 mm
X co-ordinate	X(6)=1615 mm
Y co-ordinate	Y(6)=1350 mm
X co-ordinate	X(7)=1615 mm
Y co-ordinate	Y(7)=1550 mm
X co-ordinate	X(8)=500 mm
Y co-ordinate	Y(8)=1550 mm
X co-ordinate	X(9)=500 mm
Y co-ordinate	Y(9)=1650 mm

X co-ordinate	X(10)=0 mm
Y co-ordinate	Y(10)=1650 mm
X co-ordinate	X(11)=0 mm
Y co-ordinate	Y(11)=1350 mm
X co-ordinate	X(12)=500 mm
Y co-ordinate	Y(12)=1350 mm
X co-ordinate	X(13)=500 mm
Y co-ordinate	Y(13)=0 mm
Depth of composite section	di=1650 mm
Area of in-situ concrete	Ai=347058 mm²
Centroid of in-situ concrete	Yi=1473.8 mm
Modulus of elasticity (strand)	Ep=195 kN/mm²

Cross-section 1

Distance from mid-span of beam	csd(1)=9.75 m
Number of layers of strand	nls(1)=4
Height above soffit	ds(1)=60 mm
Number of strands	ns(1)=10
Height above soffit	ds(2)=110 mm
Number of strands	ns(2)=12
Height above soffit	ds(3)=210 mm
Number of strands	ns(3)=8
Height above soffit	ds(4)=1200 mm
Number of strands	ns(4)=2

Short Term Losses (BS EN 1992-1-1)

Relaxation at transfer (%)	str=1.5

Summary

Loss	Loss of Force kN	% Loss
Relaxation	96	1.5
Elastic Shortening	550.26	8.5978
Transfer Total	646.26	10.098

Losses at Transfer

Initial force	6400 kN
Force at transfer	Pt=P0-loft=5753.7 kN

Loading	Stresses at Transfer N/mm²		
	Top of Beam	Bottom of Beam	Centroid of Strands
Prestress Self weight of Beam	-7.0055 6.1134	20.213 -5.7172	16.568 -4.1328
Total	-0.89217	14.496	12.435

Beam Concrete Stresses at Transfer

Stress Limitations (BS EN 1992-1-1, Clause 5.10.2.2)

Top of beam:
The flexural tensile stress of 0.89217 N/mm² at transfer is less than the permissible value of 1 N/mm² (as was permitted in BS5400-4).
Bottom of beam:
Compressive stress 14.496 N/mm² is less than allowable stresses of 0.7*fcki=22.4 N/mm² and 0.6*fck=25.2 N/mm².

Long Term Losses (BS EN 1992-1-1, Clause 5.10.6(1))

Relaxation after transfer(%) slr(1)=1
Shrinkage per unit length sul(1)=0.3E-3
Creep coefficient φ(∞,to) crf=2

Summary

Loss	Loss of Force kN	% Loss
Relaxation Elastic Shortening	96 550.26	1.5 8.5978
Transfer Total	646.26	10.098
Relaxation Shrinkage Creep	64 308.88 714.47	1 4.8263 11.164
Long-term Total	1087.3	16.99
All Losses	1733.6	27.088

Losses - Long term

Initial force 6400 kN
Final force Pf=P0-loftl=4666.4 kN

Unit-weight of in-situ concrete wc=24 kN/m³

Loading	Final Stresses N/mm²		
	Top of Beam	Bottom of Beam	Centroid of Strands
Prestress	-5.6816	16.393	13.437
Self weight of Beam	6.1134	-5.7172	-4.1328
In-situ concrete	2.55	-2.3848	-1.7239
Total	2.9818	8.291	7.58

Beam concrete stresses - Long term

Composite section

Height from beam soffit to
bottom of in-situ concrete hsis=1350 mm
Perc'age of shrinkage remaining ps=45 %
Percentage pcr=45 %
Percentage stT=60 %
The net moment is Mc=F*e/1E3-Mb=-1003.1 kNm
Stress at top of in-situ concrete:
ftisds=-(F/(Ai*mr)-F/(Ai*mr+Ac)-Mc*1E3*(di-Yc)/Ic)*mr*1E3
=-0.97236 N/mm²
Stress at bottom of in-situ concrete:
fbisds=-(F/(Ai*mr)-F/(Ai*mr+Ac)-Mc*1E3*(hsis-Yc)/Ic)*mr*1E3
=0.020124 N/mm²
Stress at top of precast concrete beam:
ftpbds=(F/(Ai*mr+Ac)+Mc*1E3*(d-Yc)/Ic+Mb*1E3*Yt/Iyy)*1E3
=0.76651 N/mm²
Stress at bottom of precast concrete beam:
fbpbds=(F/(Ai*mr+Ac)-Mc*1E3*Yc/Ic-Mb*1E3*Yb/Iyy)*1E3
=-0.39599 N/mm²

Loading Combination 1

(no tensile stress permitted in precast beam)
Characteristic bending moment c1b(1)=1750 kNm

Loading	Loading Combination 1 Stresses N/mm²			
	Top of in-situ	Top of Beam	Bottom of in-situ	Bottom of Beam
Prestress,beam and in-situ	0	2.9818	0	8.291
Dif. shrinkage	-0.97236	0.76651	0.020124	-0.39599
Combination 1	4.608	3.0414	2.7281	-5.279
Total	3.6356	6.7897	2.7482	2.616

Loading Combination 1 - Stresses

Loading Combination 2

(tensile stress permitted (no visible cracking))
Characteristic bending moment c2b(1)=2100 kNm

Loading	Loading Combination 2 Stresses N/mm²			
	Top of in-situ	Top of Beam	Bottom of in-situ	Bottom of Beam
Prestress,beam and in-situ	0	2.9818	0	8.291
Dif. shrinkage	-0.97236	0.76651	0.020124	-0.39599
Combination 2	5.093	3.3616	3.0153	-6.3348
Total	4.1207	7.1098	3.0354	1.5602

Loading Combination 2 - Stresses

NOTE: The stresses from temperature differences should be added to the total stresses.

Top of in-situ concrete:
Compressive stress 4.1207 N/mm² is less than the maximum allowable stress of 0.6*fckc=19.2 N/mm².
Top of beam:
Compressive stress 7.1098 N/mm² is less than the maximum allowable stress of 0.6*fck=25.2 N/mm².
Bottom of in-situ concrete:
Compressive stress 3.0354 N/mm² is less than the maximum allowable stress of 0.6*fckc=19.2 N/mm².
Bottom of beam:
Compressive stress 1.5602 N/mm² is less than the maximum allowable stress of 0.6*fck=25.2 N/mm².

Location: Ex3 - 15 metre span YE1 beam

Precast prestressed concrete YE beams with in-situ top slab

Calculations for stresses at the Serviceability Limit State (SLS) in accordance with BS EN 1992-2:2005 and NA to BS EN 1992-2:2005.

Beam span under consideration span=15 m

Beam YE 1 section properties

Depth of beam	d=700 mm
Cross-sectional area	Ac=414814 mm²
Centroid above soffit	Yb=313.39 mm
Section modulus top	Zt=43.53E6 mm³
Section modulus bottom	Zb=53.7E6 mm³
Unit weight of beam	uwb=24.5 kN/m³

Concrete compressive strengths

Characteristic cylinder strength	fcki=30 N/mm² (transfer)
Characteristic cylinder strength	fck=36 N/mm²

Concrete moduli (short-term)

Concrete modulus of elasticity	Ecmi=33 kN/mm² (transfer)
Concrete modulus of elasticity	Ecmb=34 kN/mm²

Composite section properties

Char strength (in-situ concrete)	fckc=24 N/mm²
Short-term modulus of elasticity for in-situ concrete	Ecmc=31 kN/mm²

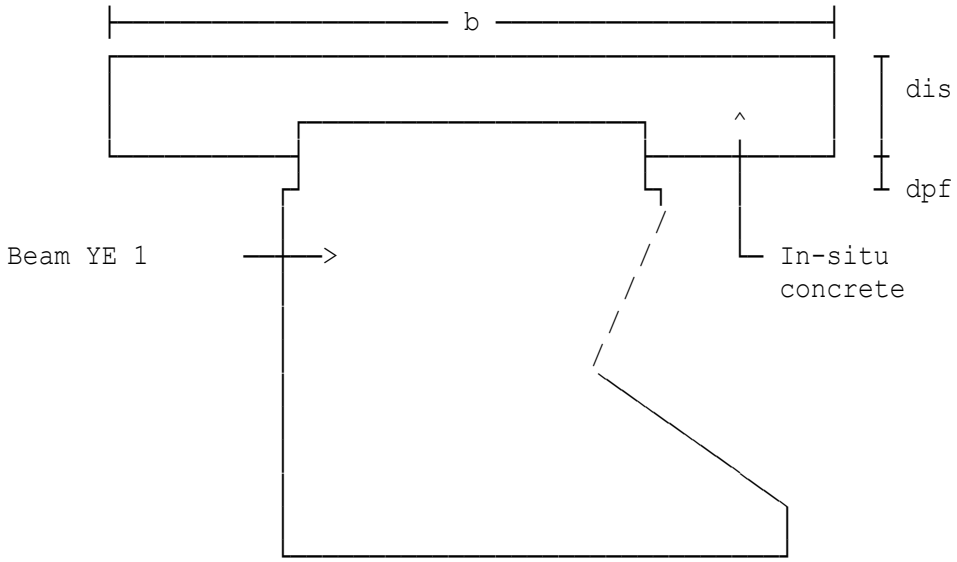

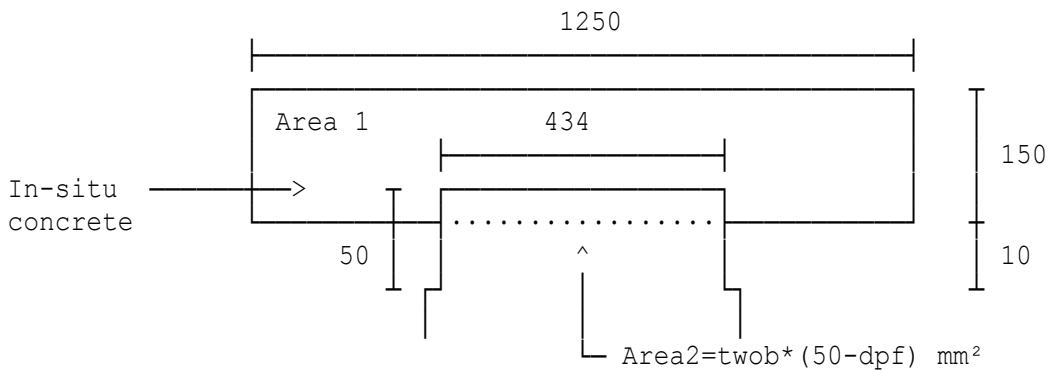

Transf'med second moment of area:
Ic=Iyy+Ac*(Yb-Yc)^2+mr*(Ii+Ai*(Yi-Yc)^2)=37.702E9 mm⁴

Depth of composite section	di=810 mm
Nominal diameter	nomd=12 mm
Nominal tensile strength	nomt=1600 N/mm²
Nominal steel area	noma=90 mm²
Char breaking load (strand)	fpk=160 kN
Initial force per strand	ipf=100 kN
Modulus of elasticity (strand)	Ep=195 kN/mm²

Cross-section 1

Distance from mid-span of beam	csd(1)=2.4 m
Number of layers of strand	nls(1)=3
Height above soffit	ds(1)=50 mm
Number of strands	ns(1)=8

WARNING:
Strand location is non-standard.

Height above soffit	ds(2)=100 mm
Number of strands	ns(2)=12

WARNING:
Strand location is non-standard.

Height above soffit	ds(3)=250 mm
Number of strands	ns(3)=6

WARNING:
Strand location is non-standard.

Bending moment from temp.loads	tlb(1)=166 kNm
Bending moment from other loads	olb(1)=191 kNm

Short Term Losses (BS EN 1992-1-1)

Relaxation at transfer (%)	str=1

Summary

Loss	Loss of Force kN	% Loss
Relaxation	26	1
Elastic Shortening	155.53	5.9818
Transfer Total	181.53	6.9818

Losses at Transfer

Initial force 2600 kN
Force at transfer Pt=P0-loft=2418.5 kN

Loading	Stresses at Transfer N/mm²		
	Top of Beam	Bottom of Beam	Centroid of Strands
Prestress	-4.957	14.575	11.248
Self weight of Beam	5.894	-4.7777	-2.96
Temporary Loads	3.8135	-3.0912	-1.9152
Other Loads	4.3878	-3.5568	-2.2036
Total	9.1382	3.1488	4.169

Beam Concrete Stresses at Transfer

Stress Limitations (BS EN 1992-1-1, Clause 5.10.2.2)

Top of beam:
Compressive stress 9.1382 N/mm² is less than allowable stresses of 0.7*fcki=21 N/mm² and 0.6*fck=21.6 N/mm².
Bottom of beam:
Compressive stress 3.1488 N/mm² is less than allowable stresses of 0.7*fcki=21 N/mm² and 0.6*fck=21.6 N/mm².

Long Term Losses (BS EN 1992-1-1, Clause 5.10.6(1))

Relaxation after transfer(%) slr(1)=0.8
Shrinkage per unit length sul(1)=0.3E-3
Creep coefficient φ(∞,to) crf=2

Summary

Loss	Loss of Force kN	% Loss
Relaxation Elastic Shortening	26 155.53	1 5.9818
Transfer Total	181.53	6.9818
Relaxation Shrinkage Creep	20.8 136.89 163.31	0.8 5.265 6.281
Long-term Total	321	12.346
All Losses	502.52	19.328

Losses - Long term

Initial force 2600 kN
Final force Pf=P0-loftl=2097.5 kN

Unit-weight of in-situ concrete wc=24 kN/m³

Loading	Final Stresses N/mm²		
	Top of Beam	Bottom of Beam	Centroid of Strands
Prestress Self weight of Beam In-situ concrete	-4.2991 5.894 2.3681	12.64 -4.7777 -1.9196	9.7549 -2.96 -1.1893
Total	3.963	5.9428	5.6056

Beam concrete stresses - Long term

Composite section

Height from beam soffit to
bottom of in-situ concrete hsis=660 mm
Perc'age of shrinkage remaining ps=50 %
Percentage pcr=50 %
Percentage stT=45 %
The net moment is Mc=F*e/1E3-Mb=-188.03 kNm
Stress at top of in-situ concrete:
ftisds=-(F/(Ai*mr)-F/(Ai*mr+Ac)-Mc*1E3*(di-Yc)/Ic)*mr*1E3
=-0.12258 N/mm²
Stress at bottom of in-situ concrete:
fbisds=-(F/(Ai*mr)-F/(Ai*mr+Ac)-Mc*1E3*(hsis-Yc)/Ic)*mr*1E3
=0.5595 N/mm²
Stress at top of precast concrete beam:

ftpbds=(F/(Ai*mr+Ac)+Mc*1E3*(d-Yc)/Ic+Mb*1E3*Yt/Iyy)*1E3
=-0.37088 N/mm²
Stress at bottom of precast concrete beam:
fbpbds=(F/(Ai*mr+Ac)-Mc*1E3*Yc/Ic-Mb*1E3*Yb/Iyy)*1E3
=0.15735 N/mm²

Loading Combination 1

(no tensile stress permitted in precast beam)
Characteristic bending moment c1b(1)=400 kNm

Loading	Loading Combination 1 Stresses N/mm²			
	Top of in-situ	Top of Beam	Bottom of in-situ	Bottom of Beam
Prestress,beam and in-situ	0	3.963	0	5.9428
Dif. shrinkage	-0.12258	-0.37088	0.5595	0.15735
Combination 1	5.5186	4.3021	3.3421	-4.5586
Total	5.396	7.8942	3.9016	1.5415

Loading Combination 1 - Stresses

Loading Combination 2

(tensile stress permitted (no visible cracking))
Characteristic bending moment c2b(1)=700 kNm

Loading	Loading Combination 2 Stresses N/mm²			
	Top of in-situ	Top of Beam	Bottom of in-situ	Bottom of Beam
Prestress,beam and in-situ	0	3.963	0	5.9428
Dif. shrinkage	-0.12258	-0.37088	0.5595	0.15735
Combination 2	6.4384	5.0191	3.8991	-7.9776
Total	6.3158	8.6112	4.4586	-1.8775

Loading Combination 2 - Stresses

NOTE: The stresses from temperature differences should be added to the total stresses.

Top of in-situ concrete:
Compressive stress 6.3158 N/mm² is less than the maximum allowable stress of 0.6*fckc=14.4 N/mm².
Top of beam:
Compressive stress 8.6112 N/mm² is less than the maximum allowable stress of 0.6*fck=21.6 N/mm².

Bottom of in-situ concrete:
Compressive stress 4.4586 N/mm² is less than the maximum allowable stress of 0.6*fckc=14.4 N/mm².
Bottom of beam:
Tensile stress 1.8775 N/mm² is less than the maximum allowable tensile stress of 2.9399 N/mm².

Location: Ex1 - 13.5 metre span T beam

Precast prestressed concrete inverted T beams with in-fill concrete

Calculations for stresses at the Serviceability Limit State (SLS) to BS5400-4:1990 implemented by DOT Departmental Standard BD 44/15.

Span of beam span=13.5 m

Beam T 5 section properties

Depth of beam d=615 mm
Cross-sectional area Ac=130560 mm²
Centroid above soffit Yb=244 mm
Section modulus top Zt=14.3E6 mm³
Section modulus bottom Zb=21.78E6 mm³
Unit weight of beam uwb=25 kN/m³

Concrete strengths

Strength at transfer fci=40 N/mm²
Characteristic strength fcu=50 N/mm²

Concrete moduli

Modulus of elasticity at transfer for concrete strength 40 N/mm² is:
Eci=31 kN/mm²
Modulus of elasticity for concrete strength 50 N/mm² is:
Ecb=34 kN/mm²

Composite section properties

Char strength (in-situ concrete) fcuc=30 N/mm²
Modulus of elasticity for concrete strength 30 N/mm² is:
Ecc=28 kN/mm²
Composite section is rectangular in shape.

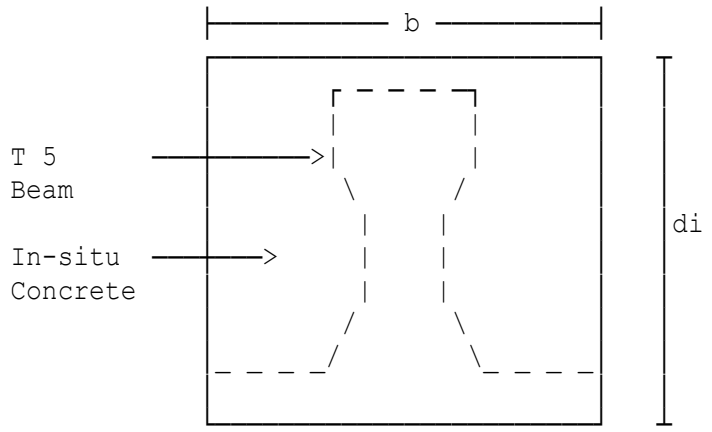

Breadth of rectangular section b=508 mm
Depth of rectangular section di=690 mm
Transf'med second moment of area Ic=Ixx+Ac*(Yb-Yc)^2+mr*(Ii+Ai*(Yi -Yc)^2)=12.608E9 mm⁴

Initial force per strand if=116 kN
Modulus of elasticity Es=200 kN/mm²

Cross-section 1

Distance from mid-span of beam csd(1)=0 m
Number of layers of strand nls(1)=4
Height above soffit ds(1)=50 mm
Number of strands ns(1)=7
Height above soffit ds(2)=90 mm
Number of strands ns(2)=6
Height above soffit ds(3)=540 mm
Number of strands ns(3)=1
Height above soffit ds(4)=580 mm
Number of strands ns(4)=1

Short Term Losses

Relaxation at transfer (%) str=1

Summary

Loss	Loss of Force kN	% Loss
Relaxation Elastic Shortening	17.4 154.04	1 8.8531
Transfer Total	171.44	9.8531

Losses at Transfer

Initial force 1740 kN
Force at transfer Pt=P0-loft=1568.6 kN

Loading	Stresses at Transfer N/mm²		
	Top of Beam	Bottom of Beam	Centroid of Strands
Prestress Self weight of Beam	-0.031274 5.191	19.936 -3.414	15.585 -1.5391
Total	5.1598	16.522	14.046

Beam Concrete Stresses at Transfer

Stress Limitations

Top of beam:
Compressive stress 5.1598 N/mm² is less than allowable stresses of 0.5*fci=20 N/mm² and 0.4*fcu=20 N/mm².

Bottom of beam:
Compressive stress 16.522 N/mm² is less than allowable stresses of 0.5*fci=20 N/mm² and 0.4*fcu=20 N/mm².

Long Term Losses

Relaxation after transfer(%) slr(1)=1.5
Shrinkage per unit length sul(1)=0.3E-3

Summary

Loss	Loss of Force kN	% Loss
Relaxation Elastic Shortening	17.4 154.04	1 8.8531
Transfer Total	171.44	9.8531
Relaxation Shrinkage Creep	26.1 83.7 210.6	1.5 4.8103 12.104
Long-term Total	320.4	18.414
All Losses	491.85	28.267

Losses - Long term

Initial force 1740 kN
Final force Pf=P0-loftl=1248.2 kN

Unit-weight of in-situ concrete wc=25 kN/m³

Loading	Final Stresses N/mm²		
	Top of Beam	Bottom of Beam	Centroid of Strands
Prestress Self weight of Beam In-situ concrete	-0.024885 5.191 8.7456	15.864 -3.414 -5.7518	12.402 -1.5391 -2.593
Total	13.912	6.698	8.2697

Beam concrete stresses - Long term

Composite section

Height from beam soffit to
bottom of in-situ concrete hsis=100 mm

Perc'age of shrinkage remaining ps=25 %
Percentage pcr=25 %
Percentage stT=50 %
Apply moment to beam to straighten it as follows:
The net moment is Mc=F*e/1E3-Mb=2.9973 kNm
Stress at top of in-situ concrete:
ftisds=-(F/(Ai*mr)-F/(Ai*mr+Ac)-Mc*1E3*(di-Yc)/Ic)*mr*1E3
=0.48626 N/mm²
Stress at bottom of in-situ concrete:
fbisds=-(F/(Ai*mr)-F/(Ai*mr+Ac)-Mc*1E3*(hsis-Yc)/Ic)*mr*1E3
=0.37075 N/mm²
Stress at top of precast concrete beam:
ftpbds=(F/(Ai*mr+Ac)+Mc*1E3*(d-Yc)/Ic+Mb*1E3*Yt/Ixx)*1E3
=-1.8775 N/mm²
Stress at bottom of precast concrete beam:
fbpbds=(F/(Ai*mr+Ac)-Mc*1E3*Yc/Ic-Mb*1E3*Yb/Ixx)*1E3=0.03264 N/mm²

Combination 1 loading

Applied bending moment c1b(1)=204 kNm

Loading	Combination 1 Stresses N/mm²			
	Top of in-situ	Top of Beam	Bottom of in-situ	Bottom of Beam
Prestress,beam and in-situ	0	13.912	0	6.698
Dif. shrinkage	0.48626	-1.8775	0.37075	0.03264
Combination 1	5.5253	5.2816	-3.1651	-5.4613
Total	6.0115	17.316	-2.7943	1.2693

Combination 1 Loading - Stresses

Combination 2 to 5 loading

Applied bending moment c2b(1)=260 kNm

Loading	Combination 2 to 5 Stresses N/mm²			
	Top of in-situ	Top of Beam	Bottom of in-situ	Bottom of Beam
Prestress,beam and in-situ	0	13.912	0	6.698
Dif. shrinkage	0.48626	-1.8775	0.37075	0.03264
Combination 2-5	5.9857	5.7218	-4.0339	-6.9605
Total	6.472	17.756	-3.6632	-0.22986

Combination 2 to 5 Loading - Stresses

Combination 3 loading. The stresses from the Proforma for temperature differences should be added to the total stresses.

Top of in-situ concrete:
Compressive stress 6.472 N/mm² is less than the maximum allowable stress of 0.5*fcuc=15 N/mm².
Top of beam:
Compressive stress 17.756 N/mm² is less than the maximum allowable stress of 0.4*fcu=20 N/mm².

WARNING:
Bottom of in-situ concrete:
Tensile stress 3.6632 N/mm² exceeds maximum allowable tensile stress of 3.6 N/mm² from Table 32.

Bottom of beam:
Tensile stress 0.22986 N/mm² is less than the maximum allowable tensile stress of 3.182 N/mm².

Copyright 1986-2024 Fitzroy Systems Ltd.

Location: Ex2 - 13.5 metre span edge beam

Precast prestressed concrete inverted T beams with in-fill concrete

Calculations for stresses at the Serviceability Limit State (SLS) to BS5400-4:1990 implemented by DOT Departmental Standard BD 44/15.

Span of beam span=13.5 m

Beam T 5 section properties

Depth of beam d=615 mm
Cross-sectional area Ac=130560 mm²
Centroid above soffit Yb=244 mm
Section modulus top Zt=14.3E6 mm³
Section modulus bottom Zb=21.78E6 mm³
Unit weight of beam uwb=25 kN/m³

Concrete strengths

Strength at transfer fci=40 N/mm²
Characteristic strength fcu=50 N/mm²

Concrete moduli

Modulus of elasticity at transfer for concrete strength 40 N/mm² is:
Eci=31 kN/mm²
Modulus of elasticity for concrete strength 50 N/mm² is:
Ecb=34 kN/mm²

Composite section properties

Char strength (in-situ concrete) fcuc=30 N/mm²
Modulus of elasticity for concrete strength 30 N/mm² is:
Ecc=28 kN/mm²

Item No. 1

Item weighting iw1=0.82353
X co-ordinate X(1)=0 mm
Y co-ordinate Y(1)=0 mm
X co-ordinate X(2)=508 mm
Y co-ordinate Y(2)=0 mm
X co-ordinate X(3)=508 mm
Y co-ordinate Y(3)=250 mm
X co-ordinate X(4)=650 mm
Y co-ordinate Y(4)=350 mm
X co-ordinate X(5)=650 mm
Y co-ordinate Y(5)=790 mm
X co-ordinate X(6)=150 mm
Y co-ordinate Y(6)=790 mm
X co-ordinate X(7)=150 mm
Y co-ordinate Y(7)=690 mm
X co-ordinate X(8)=0 mm

Y co-ordinate	Y(8)=690 mm
X co-ordinate	X(9)=0 mm
Y co-ordinate	Y(9)=0 mm

Item No. 2

Second moment of area	IXX2=5.3143E9 mm^4
Area of item	A2=130560 mm^2
Centroid from X-X axis	YC2=244 mm
Item weighting	iw2=0.17647
Depth of composite section	di=790 mm
Nominal diameter	nomd=12 mm
Nominal tensile strength	nomt=1700 N/mm^2
Nominal steel area	noma=100 mm^2
Characteristic breaking load	cbl=150 kN
Initial force per strand	if=100 kN
Modulus of elasticity	Es=200 kN/mm^2

Cross-section 1

Distance from mid-span of beam	csd(1)=2 m
Number of layers of strand	nls(1)=4
Height above soffit	ds(1)=49 mm
Number of strands	ns(1)=10

WARNING:
Strand location is non-standard.

Height above soffit	ds(2)=85 mm
Number of strands	ns(2)=8

WARNING:
Strand location is non-standard.

Height above soffit	ds(3)=520 mm
Number of strands	ns(3)=2

WARNING:
Strand location is non-standard.

Height above soffit	ds(4)=580 mm
Number of strands	ns(4)=2

WARNING:
Number of strands exceeds maximum for this location.

Bending moment from temp.loads	tlb(1)=80 kNm
Bending moment from other loads	olb(1)=50 kNm

Short Term Losses

Relaxation at transfer (%)	str=1

Summary

Loss	Loss of Force kN	% Loss
Relaxation	22	1
Elastic Shortening	284.76	12.943
Transfer Total	306.76	13.943

Losses at Transfer

Initial force 2200 kN
Force at transfer Pt=P0-loft=1893.2 kN

Loading	Stresses at Transfer N/mm²		
	Top of Beam	Bottom of Beam	Centroid of Strands
Prestress	2.4975	22.395	17.439
Self weight of Beam	4.7353	-3.1143	-1.1592
Temporary Loads	5.5849	-3.6731	-1.3671
Other Loads	3.4906	-2.2957	-0.85447
Total	16.308	13.312	14.059

Beam Concrete Stresses at Transfer

Stress Limitations

Top of beam:
Compressive stress 16.308 N/mm² is less than allowable stresses of 0.5*fci=20 N/mm² and 0.4*fcu=20 N/mm².
Bottom of beam:
Compressive stress 13.312 N/mm² is less than allowable stresses of 0.5*fci=20 N/mm² and 0.4*fcu=20 N/mm².

Long Term Losses

Relaxation after transfer(%) slr(1)=1.5
Shrinkage per unit length sul(1)=0.3E-3

Summary

Loss	Loss of Force kN	% Loss
Relaxation Elastic Shortening	22 284.76	1 12.943
Transfer Total	306.76	13.943
Relaxation Shrinkage Creep	33 132 370.41	1.5 6 16.837
Long-term Total	535.41	24.337
All Losses	842.16	38.28

Losses - Long term

Initial force 2200 kN
Final force Pf=P0-loftl=1357.8 kN

Unit-weight of in-situ concrete wc=25 kN/m³

Loading	Final Stresses N/mm²		
	Top of Beam	Bottom of Beam	Centroid of Strands
Prestress Self weight of Beam In-situ concrete	1.7912 4.7353 11.8	16.062 -3.1143 -7.7605	12.507 -1.1592 -2.8885
Total	18.326	5.1871	8.4598

Beam concrete stresses - Long term

Composite section

Height from beam soffit to
bottom of in-situ concrete hsis=100 mm
Perc'age of shrinkage remaining ps=40 %
Percentage pcr=40 %
Percentage stT=50 %
Apply moment to beam to straighten it as follows:
The net moment is Mc=F*e/1E3-Mb=-73.022 kNm
Stress at top of in-situ concrete:
ftisds=-(F/(Ai*mr)-F/(Ai*mr+Ac)-Mc*1E3*(di-Yc)/Ic)*mr*1E3
=0.61842 N/mm²
Stress at bottom of in-situ concrete:
fbisds=-(F/(Ai*mr)-F/(Ai*mr+Ac)-Mc*1E3*(hsis-Yc)/Ic)*mr*1E3
=2.7339 N/mm²
Stress at top of precast concrete beam:

ftpbds=(F/(Ai*mr+Ac)+Mc*1E3*(d-Yc)/Ic+Mb*1E3*Yt/Ixx)*1E3
=-9.6815 N/mm²

Stress at bottom of precast concrete beam:
fbpbds=(F/(Ai*mr+Ac)-Mc*1E3*Yc/Ic-Mb*1E3*Yb/Ixx)*1E3=-0.21965 N/mm²

Combination 1 loading

Applied bending moment c1b(1)=550 kNm

Loading	Combination 1 Stresses N/mm²			
	Top of in-situ	Top of Beam	Bottom of in-situ	Bottom of Beam
Prestress,beam and in-situ	0	18.326	0	5.1871
Dif. shrinkage	0.61842	-9.6815	2.7339	-0.21965
Combination 1	9.8996	6.6678	-6.8588	-11.133
Total	10.518	15.313	-4.125	-6.1651

Combination 1 Loading - Stresses

WARNING:
Bottom of beam:
Tensile stress 6.1651 N/mm² exceeds maximum allowable tensile stress of 0 N/mm².

Combination 2 to 5 loading

Applied bending moment c2b(1)=625 kNm

Loading	Combination 2 to 5 Stresses N/mm²			
	Top of in-situ	Top of Beam	Bottom of in-situ	Bottom of Beam
Prestress,beam and in-situ	0	18.326	0	5.1871
Dif. shrinkage	0.61842	-9.6815	2.7339	-0.21965
Combination 2-5	10.312	6.9456	-7.7941	-12.651
Total	10.931	15.591	-5.0603	-7.6832

Combination 2 to 5 Loading - Stresses

Combination 3 loading. The stresses from the Proforma for temperature differences should be added to the total stresses.

Top of in-situ concrete:
Compressive stress 10.931 N/mm² is less than the maximum allowable stress of 0.5*fcuc=15 N/mm².
Top of beam:
Compressive stress 15.591 N/mm² is less than the maximum allowable stress of 0.4*fcu=20 N/mm².

WARNING:
Bottom of in-situ concrete:
Tensile stress 5.0603 N/mm² exceeds maximum allowable tensile stress of 3.6 N/mm² from Table 32.

WARNING:
Bottom of beam:
Tensile stress 7.6832 N/mm² exceeds maximum allowable tensile stress of 3.182 N/mm².

Location: Ex3 - 17.0 metre span T9 beam

Precast prestressed concrete inverted T beams with in-fill concrete

Calculations for stresses at the Serviceability Limit State (SLS) to BS5400-4:1990 implemented by DOT Departmental Standard BD 44/15.

Span of beam span=17 m

Beam T 9 section properties

Depth of beam d=775 mm
Cross-sectional area Ac=163360 mm²
Centroid above soffit Yb=334 mm
Section modulus top Zt=24.32E6 mm³
Section modulus bottom Zb=32.06E6 mm³
Unit weight of beam uwb=25 kN/m³

Concrete strengths

Strength at transfer fci=35 N/mm²
Characteristic strength fcu=40 N/mm²

Concrete moduli

Modulus of elasticity at transfer for concrete strength 35 N/mm² is:
Eci=29.5 kN/mm²
Modulus of elasticity for concrete strength 40 N/mm² is:
Ecb=31 kN/mm²

Composite section properties

Char strength (in-situ concrete) fcuc=35 N/mm²
Modulus of elasticity for concrete strength 35 N/mm² is:
Ecc=29.5 kN/mm²
Composite section is rectangular in shape.

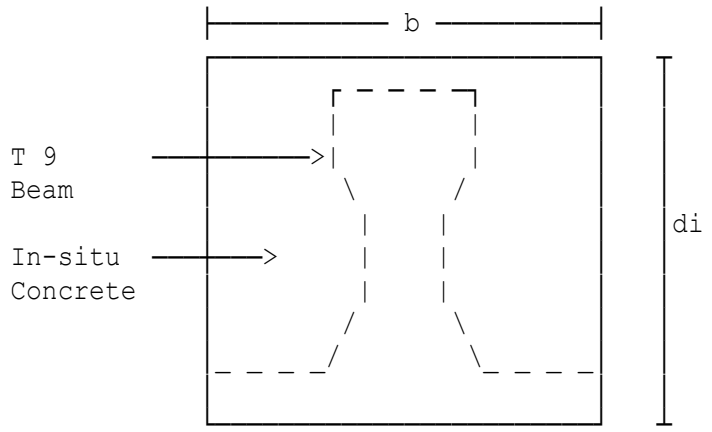

Breadth of rectangular section b=550 mm
Depth of rectangular section di=850 mm
Second moment of area Ic=Ixx+Ac*(Yb-Yc)^2+mr*(Ii+Ai*(Yi -Yc)^2)=28.147E9 mm⁴

Initial force per strand if=200 kN
Modulus of elasticity Es=200 kN/mm²

Cross-section 1

Distance from mid-span of beam csd(1)=6 m
Number of layers of strand nls(1)=6
Height above soffit ds(1)=50 mm
Number of strands ns(1)=4
Height above soffit ds(2)=90 mm
Number of strands ns(2)=3
Height above soffit ds(3)=260 mm
Number of strands ns(3)=1
Height above soffit ds(4)=500 mm
Number of strands ns(4)=1
Height above soffit ds(5)=620 mm
Number of strands ns(5)=1
Height above soffit ds(6)=740 mm
Number of strands ns(6)=1

Short Term Losses

Relaxation at transfer (%) str=1

Summary

Loss	Loss of Force kN	% Loss
Relaxation Elastic Shortening	22 254.58	1 11.572
Transfer Total	276.58	12.572

Losses at Transfer

Initial force 2200 kN
Force at transfer Pt=P0-loft=1923.4 kN

Loading	Stresses at Transfer N/mm²		
	Top of Beam	Bottom of Beam	Centroid of Strands
Prestress Self weight of Beam	3.9679 3.0485	17.686 -2.3089	13.519 -0.68122
Total	7.0165	15.377	12.837

Beam Concrete Stresses at Transfer

Stress Limitations

Top of beam:
Compressive stress 7.0165 N/mm² is less than allowable stresses of 0.5*fci=17.5 N/mm² and 0.4*fcu=16 N/mm².
Bottom of beam:
Compressive stress 15.377 N/mm² is less than allowable stresses of 0.5*fci=17.5 N/mm² and 0.4*fcu=16 N/mm².

Long Term Losses

Relaxation after transfer(%) slr(1)=2
Shrinkage per unit length sul(1)=0.3E-3

Summary

Loss	Loss of Force kN	% Loss
Relaxation Elastic Shortening	22 254.58	1 11.572
Transfer Total	276.58	12.572
Relaxation Shrinkage Creep	44 147.18 400.43	2 6.69 18.202
Long-term Total	591.61	26.892
All Losses	868.19	39.463

Losses - Long term

Initial force 2200 kN
Final force Pf=P0-loftl=1331.8 kN

Unit-weight of in-situ concrete wc=25 kN/m³

Loading	Final Stresses N/mm²		
	Top of Beam	Bottom of Beam	Centroid of Strands
Prestress Self weight of Beam In-situ concrete	2.7475 3.0485 5.6757	12.246 -2.3089 -4.2986	9.3604 -0.68122 -1.2683
Total	11.472	5.6388	7.4109

Beam concrete stresses - Long term

Composite section

Height from beam soffit to
bottom of in-situ concrete hsis=100 mm

Combination 1 loading

Applied bending moment c1b(1)=200 kNm

Loading	Combination 1 Stresses N/mm²			
	Top of in-situ	Top of Beam	Bottom of in-situ	Bottom of Beam
Prestress,beam and in-situ	0	11.472	0	5.6388
Combination 1	3.3973	2.7978	-2.3093	-3.0198
Total	3.3973	14.269	-2.3093	2.619

Combination 1 Loading - Stresses

Combination 2 to 5 loading

Applied bending moment c2b(1)=250 kNm

Loading	Combination 2 to 5 Stresses N/mm²			
	Top of in-situ	Top of Beam	Bottom of in-situ	Bottom of Beam
Prestress,beam and in-situ	0	11.472	0	5.6388
Combination 2-5	3.7748	3.1086	-2.8866	-3.7748
Total	3.7748	14.58	-2.8866	1.8641

Combination 2 to 5 Loading - Stresses

Combination 3 loading. The stresses from the Proforma for temperature differences should be added to the total stresses.

Top of in-situ concrete:
Compressive stress 3.7748 N/mm² is less than the maximum allowable stress of 0.5*fcuc=17.5 N/mm².
Top of beam:
Compressive stress 14.58 N/mm² is less than the maximum allowable stress of 0.4*fcu=16 N/mm².
Bottom of in-situ concrete:
Tensile stress 2.8866 N/mm² is less than the maximum allowable tensile stress of 4 N/mm² from Table 32.

Copyright 1986-2024 Fitzroy Systems Ltd.

Bottom of beam:
Compressive stress 1.8641 N/mm² is less than the maximum allowable stress of 0.4*fcu=16 N/mm².

Copyright 1986-2024 Fitzroy Systems Ltd.

Location: Ex1 - 17.0 metre span T9 beam

Precast prestressed concrete inverted T beams with in-fill concrete

Calculations for stresses at the Serviceability Limit State (SLS) in accordance with BS EN 1992-2:2005 and NA to BS EN 1992-2:2005.

Beam span under consideration span=17 m

Beam T 9 section properties

Depth of beam d=775 mm
Cross-sectional area Ac=163360 mm²
Centroid above soffit Yb=334 mm
Section modulus top Zt=24.32E6 mm³
Section modulus bottom Zb=32.06E6 mm³
Unit weight of beam uwb=25 kN/m³

Concrete compressive strengths

Characteristic cylinder strength fcki=28 N/mm² (transfer)
Characteristic cylinder strength fck=32 N/mm²

Concrete moduli (short-term)

Concrete modulus of elasticity Ecmi=32 kN/mm² (transfer)
Concrete modulus of elasticity Ecmb=33 kN/mm²

Composite section properties

Char strength (in-situ concrete) fckc=32 N/mm²
Short-term modulus of elasticity
for in-situ concrete Ecmc=33 kN/mm²
Composite section is rectangular in shape.

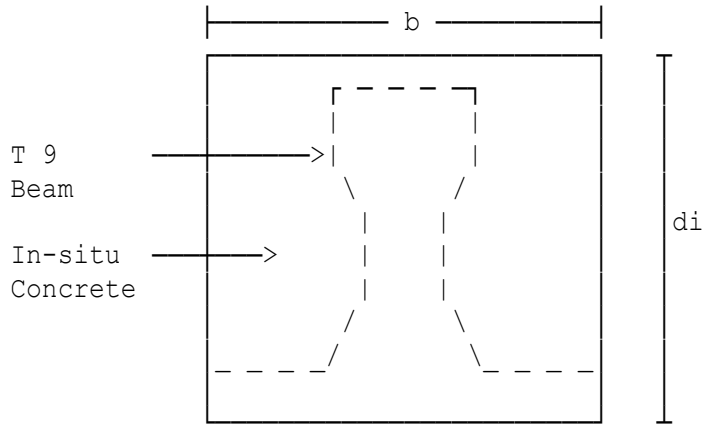

Breadth of rectangular section b=550 mm
Depth of rectangular section di=850 mm
Second moment of area Ic=Iyy+Ac*(Yb-Yc)^2+mr*(Ii+Ai*(Yi -Yc)^2)=28.147E9 mm⁴
Modulus of elasticity (strand) Ep=195 kN/mm²

Cross-section 1

Distance from mid-span of beam csd(1)=6 m
Number of layers of strand nls(1)=6
Height above soffit ds(1)=50 mm
Number of strands ns(1)=4
Height above soffit ds(2)=90 mm
Number of strands ns(2)=3
Height above soffit ds(3)=260 mm
Number of strands ns(3)=1
Height above soffit ds(4)=500 mm
Number of strands ns(4)=1
Height above soffit ds(5)=620 mm
Number of strands ns(5)=1
Height above soffit ds(6)=740 mm
Number of strands ns(6)=1

Short Term Losses (BS EN 1992-1-1)

Relaxation at transfer (%) str=1

Summary

Loss	Loss of Force kN	% Loss
Relaxation	22	1
Elastic Shortening	207.07	9.4121
Transfer Total	229.07	10.412

Losses at Transfer

Initial force 2200 kN
Force at transfer Pt=P0-loft=1970.9 kN

Loading	Stresses at Transfer N/mm²		
	Top of Beam	Bottom of Beam	Centroid of Strands
Prestress	4.0659	18.123	13.852
Self weight of Beam	3.0485	-2.3089	-0.68122
Total	7.1145	15.814	13.171

Beam Concrete Stresses at Transfer

Stress Limitations (BS EN 1992-1-1, Clause 5.10.2.2)

Top of beam:
Compressive stress 7.1145 N/mm² is less than allowable stresses of 0.7*fcki=19.6 N/mm² and 0.6*fck=19.2 N/mm².

Bottom of beam:
Compressive stress 15.814 N/mm² is less than allowable stresses of 0.7*fcki=19.6 N/mm² and 0.6*fck=19.2 N/mm².

Long Term Losses (BS EN 1992-1-1, Clause 5.10.6(1))

Relaxation after transfer(%) slr(1)=2
Shrinkage per unit length sul(1)=0.3E-3
Creep coefficient φ(∞,to) crf=2

Summary

Loss	Loss of Force kN	% Loss
Relaxation Elastic Shortening	22 207.07	1 9.4121
Transfer Total	229.07	10.412
Relaxation Shrinkage Creep	44 143.5 453.58	2 6.5228 20.617
Long-term Total	641.08	29.14
All Losses	870.15	39.552

Losses - Long term

Initial force 2200 kN
Final force Pf=P0-loftl=1329.9 kN

Unit-weight of in-situ concrete wc=25 kN/m³

Loading	Final Stresses N/mm²		
	Top of Beam	Bottom of Beam	Centroid of Strands
Prestress Self weight of Beam In-situ concrete	2.7434 3.0485 5.6757	12.228 -2.3089 -4.2986	9.3467 -0.68122 -1.2683
Total	11.468	5.6208	7.3971

Beam concrete stresses - Long term

Composite section

Height from beam soffit to
bottom of in-situ concrete hsis=100 mm

Loading Combination 1

(no tensile stress permitted in precast beam)
Characteristic bending moment c1b(1)=200 kNm

Loading	Loading Combination 1 Stresses N/mm²			
	Top of in-situ	Top of Beam	Bottom of in-situ	Bottom of Beam
Prestress,beam and in-situ	0	11.468	0	5.6208
Combination 1	3.3973	2.7978	-2.3093	-3.0198
Total	3.3973	14.265	-2.3093	2.601

Loading Combination 1 - Stresses

Loading Combination 2

(tensile stress permitted (no visible cracking))
Characteristic bending moment c2b(1)=250 kNm

Loading	Loading Combination 2 Stresses N/mm²			
	Top of in-situ	Top of Beam	Bottom of in-situ	Bottom of Beam
Prestress,beam and in-situ	0	11.468	0	5.6208
Combination 2	3.7748	3.1086	-2.8866	-3.7748
Total	3.7748	14.576	-2.8866	1.846

Loading Combination 2 - Stresses

NOTE: The stresses from temperature differences should be added to the total stresses.

Top of in-situ concrete:
Compressive stress 3.7748 N/mm² is less than the maximum allowable stress of 0.6*fckc=19.2 N/mm².
Top of beam:
Compressive stress 14.576 N/mm² is less than the maximum allowable stress of 0.6*fck=19.2 N/mm².
Bottom of in-situ concrete:
Tensile stress 2.8866 N/mm² is less than the maximum allowable tensile stress of 3.0231 N/mm² (EN 1992-1-1 expression 3.23)
Bottom of beam:
Compressive stress 1.846 N/mm² is less than the maximum allowable stress of 0.6*fck=19.2 N/mm².

Copyright 1986-2024 Fitzroy Systems Ltd.

Location: Ex2 - 13.5 metre span edge beam

Precast prestressed concrete inverted T beams with in-fill concrete

Calculations for stresses at the Serviceability Limit State (SLS) in accordance with BS EN 1992-2:2005 and NA to BS EN 1992-2:2005.

Beam span under consideration span=13.5 m

Beam T 5 section properties

Depth of beam	d=615 mm
Cross-sectional area	Ac=130560 mm²
Centroid above soffit	Yb=244 mm
Section modulus top	Zt=14.3E6 mm³
Section modulus bottom	Zb=21.78E6 mm³
Unit weight of beam	uwb=25 kN/m³

Concrete compressive strengths

Characteristic cylinder strength	fcki=32 N/mm² (transfer)
Characteristic cylinder strength	fck=40 N/mm²

Concrete moduli (short-term)

Concrete modulus of elasticity	Ecmi=33 kN/mm² (transfer)
Concrete modulus of elasticity	Ecmb=35 kN/mm²

Composite section properties

Char strength (in-situ concrete)	fckc=24 N/mm²
Short-term modulus of elasticity for in-situ concrete	Ecmc=31 kN/mm²

Item No. 1

Item weighting	iw1=0.88571
X co-ordinate	X(1)=0 mm
Y co-ordinate	Y(1)=0 mm
X co-ordinate	X(2)=508 mm
Y co-ordinate	Y(2)=0 mm
X co-ordinate	X(3)=508 mm
Y co-ordinate	Y(3)=250 mm
X co-ordinate	X(4)=650 mm
Y co-ordinate	Y(4)=350 mm
X co-ordinate	X(5)=650 mm
Y co-ordinate	Y(5)=790 mm
X co-ordinate	X(6)=150 mm
Y co-ordinate	Y(6)=790 mm
X co-ordinate	X(7)=150 mm
Y co-ordinate	Y(7)=690 mm
X co-ordinate	X(8)=0 mm
Y co-ordinate	Y(8)=690 mm
X co-ordinate	X(9)=0 mm

Y co-ordinate Y(9)=0 mm

Item No. 2

Second moment of area IXX2=5.3143E9 mm⁴
Area of item A2=130560 mm²
Centroid from X-X axis YC2=244 mm
Item weighting iw2=0.11429
Depth of composite section di=790 mm
Nominal diameter nomd=12 mm
Nominal tensile strength nomt=1700 N/mm²
Nominal steel area noma=100 mm²
Char breaking load (strand) fpk=150 kN
Initial force per strand ipf=100 kN
Modulus of elasticity (strand) Ep=195 kN/mm²

Cross-section 1

Distance from mid-span of beam csd(1)=2 m
Number of layers of strand nls(1)=4
Height above soffit ds(1)=49 mm
Number of strands ns(1)=10

WARNING:
Strand location is non-standard.

Height above soffit ds(2)=85 mm
Number of strands ns(2)=8

WARNING:
Strand location is non-standard.

Height above soffit ds(3)=520 mm
Number of strands ns(3)=2

WARNING:
Strand location is non-standard.

Height above soffit ds(4)=580 mm
Number of strands ns(4)=2

WARNING:
Number of strands exceeds maximum for this location.

Bending moment from temp.loads tlb(1)=80 kNm
Bending moment from other loads olb(1)=50 kNm

Short Term Losses (BS EN 1992-1-1)

Relaxation at transfer (%) str=1

Summary

Loss	Loss of Force kN	% Loss
Relaxation	22	1
Elastic Shortening	232.92	10.587
Transfer Total	254.92	11.587

Losses at Transfer

Initial force 2200 kN
Force at transfer Pt=P0-loft=1945.1 kN

Loading	Stresses at Transfer N/mm²		
	Top of Beam	Bottom of Beam	Centroid of Strands
Prestress	2.5659	23.009	17.917
Self weight of Beam	4.7353	-3.1143	-1.1592
Temporary Loads	5.5849	-3.6731	-1.3671
Other Loads	3.4906	-2.2957	-0.85447
Total	16.377	13.925	14.536

Beam Concrete Stresses at Transfer

Stress Limitations (BS EN 1992-1-1, Clause 5.10.2.2)

Top of beam:
Compressive stress 16.377 N/mm² is less than allowable stresses of 0.7*fcki=22.4 N/mm² and 0.6*fck=24 N/mm².
Bottom of beam:
Compressive stress 13.925 N/mm² is less than allowable stresses of 0.7*fcki=22.4 N/mm² and 0.6*fck=24 N/mm².

Long Term Losses (BS EN 1992-1-1, Clause 5.10.6(1))

Relaxation after transfer(%) slr(1)=1.5
Shrinkage per unit length sul(1)=0.3E-3
Creep coefficient φ(∞,to) crf=2

Summary

Loss	Loss of Force kN	% Loss
Relaxation Elastic Shortening	22 232.92	1 10.587
Transfer Total	254.92	11.587
Relaxation Shrinkage Creep	33 128.7 452.92	1.5 5.85 20.587
Long-term Total	614.62	27.937
All Losses	869.53	39.524

Losses - Long term

Initial force 2200 kN
Final force Pf=P0-loftl=1330.5 kN

Unit-weight of in-situ concrete wc=25 kN/m³

Loading	Final Stresses N/mm²		
	Top of Beam	Bottom of Beam	Centroid of Strands
Prestress Self weight of Beam In-situ concrete	1.7551 4.7353 11.8	15.738 -3.1143 -7.7605	12.255 -1.1592 -2.8885
Total	18.29	4.8634	8.2077

Beam concrete stresses - Long term

Composite section

Height from beam soffit to
bottom of in-situ concrete hsis=100 mm
Perc'age of shrinkage remaining ps=40 %
Percentage pcr=40 %
Percentage stT=50 %
The net moment is Mc=F*e/1E3-Mb=-98.179 kNm
Stress at top of in-situ concrete:
ftisds=-(F/(Ai*mr)-F/(Ai*mr+Ac)-Mc*1E3*(di-Yc)/Ic)*mr*1E3
=0.63313 N/mm²
Stress at bottom of in-situ concrete:
fbisds=-(F/(Ai*mr)-F/(Ai*mr+Ac)-Mc*1E3*(hsis-Yc)/Ic)*mr*1E3
=3.566 N/mm²
Stress at top of precast concrete beam:

ftpbds=(F/(Ai*mr+Ac)+Mc*1E3*(d-Yc)/Ic+Mb*1E3*Yt/Iyy)*1E3
=-11.705 N/mm²

Stress at bottom of precast concrete beam:
fbpbds=(F/(Ai*mr+Ac)-Mc*1E3*Yc/Ic-Mb*1E3*Yb/Iyy)*1E3=-0.50805 N/mm²

Loading Combination 1

(no tensile stress permitted in precast beam)
Characteristic bending moment c1b(1)=550 kNm

Loading	Loading Combination 1 Stresses N/mm²			
	Top of in-situ	Top of Beam	Bottom of in-situ	Bottom of Beam
Prestress,beam and in-situ	0	18.29	0	4.8634
Dif. shrinkage	0.63313	-11.705	3.566	-0.50805
Combination 1	10.115	6.2872	-7.1584	-10.77
Total	10.748	12.873	-3.5924	-6.4151

Loading Combination 1 - Stresses

WARNING:
Bottom of in-situ concrete:
Tensile stress 3.5924 N/mm² exceeds maximum allowable tensile stress of 2.4956 N/mm² (EN 1992-1-1 expression 3.23)

WARNING:
Bottom of beam:
Tensile stress 6.4151 N/mm² exceeds maximum allowable tensile stress of 0 N/mm².

Loading Combination 2

(tensile stress permitted (no visible cracking))
Characteristic bending moment c2b(1)=625 kNm

Loading	Loading Combination 2 Stresses N/mm²			
	Top of in-situ	Top of Beam	Bottom of in-situ	Bottom of Beam
Prestress,beam and in-situ	0	18.29	0	4.8634
Dif. shrinkage	0.63313	-11.705	3.566	-0.50805
Combination 2	10.536	6.5492	-8.1345	-12.239
Total	11.169	13.135	-4.5685	-7.8838

Loading Combination 2 - Stresses

NOTE: The stresses from temperature differences should be added to the total stresses.

Top of in-situ concrete:
Compressive stress 11.169 N/mm² is less than the maximum allowable stress of 0.6*fckc=14.4 N/mm².
Top of beam:
Compressive stress 13.135 N/mm² is less than the maximum allowable stress of 0.6*fck=24 N/mm².

WARNING:
Bottom of in-situ concrete:
Tensile stress 4.5685 N/mm² exceeds maximum allowable tensile stress of 2.4956 N/mm² (EN 1992-1-1 expression 3.23)

WARNING:
Bottom of beam:
Tensile stress 7.8838 N/mm² exceeds maximum allowable tensile stress of 3.0263 N/mm².

Copyright 1986-2024 Fitzroy Systems Ltd.

Location: Ex3 - 13.5 metre span T beam

Precast prestressed concrete inverted T beams with in-fill concrete

Calculations for stresses at the Serviceability Limit State (SLS) in accordance with BS EN 1992-2:2005 and NA to BS EN 1992-2:2005.

Beam span under consideration span=13.5 m

Beam T 5 section properties

Depth of beam	d=615 mm
Cross-sectional area	Ac=130560 mm²
Centroid above soffit	Yb=244 mm
Section modulus top	Zt=14.3E6 mm³
Section modulus bottom	Zb=21.78E6 mm³
Unit weight of beam	uwb=25 kN/m³

Concrete compressive strengths

Characteristic cylinder strength	fcki=32 N/mm² (transfer)
Characteristic cylinder strength	fck=40 N/mm²

Concrete moduli (short-term)

Concrete modulus of elasticity	Ecmi=33 kN/mm² (transfer)
Concrete modulus of elasticity	Ecmb=35 kN/mm²

Composite section properties

Char strength (in-situ concrete)	fckc=25 N/mm²
Short-term modulus of elasticity for in-situ concrete	Ecmc=31 kN/mm²

Composite section is rectangular in shape.

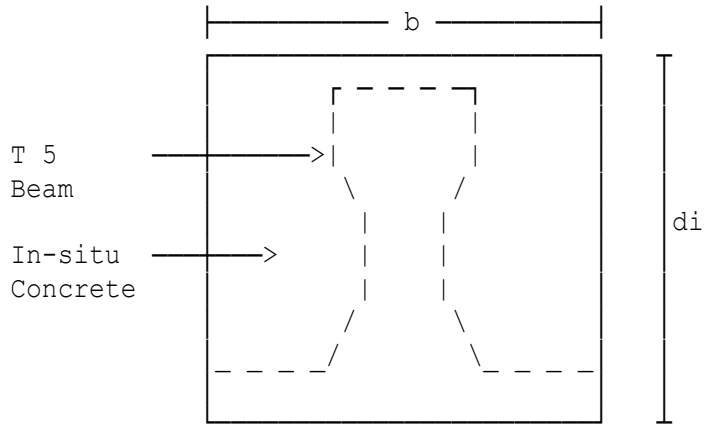

Breadth of rectangular section	b=508 mm
Depth of rectangular section	di=690 mm
Transf'med second moment of area	Ic=Iyy+Ac*(Yb-Yc)^2+mr*(Ii+Ai*(Yi -Yc)^2)=13.07E9 mm⁴
Modulus of elasticity (strand)	Ep=195 kN/mm²

Cross-section 1

Distance from mid-span of beam csd(1)=0 m
Number of layers of strand nls(1)=4
Height above soffit ds(1)=50 mm
Number of strands ns(1)=7
Height above soffit ds(2)=90 mm
Number of strands ns(2)=6
Height above soffit ds(3)=540 mm
Number of strands ns(3)=1
Height above soffit ds(4)=580 mm
Number of strands ns(4)=1

Short Term Losses (BS EN 1992-1-1)

Relaxation at transfer (%) str=1

Summary

Loss	Loss of Force kN	% Loss
Relaxation Elastic Shortening	17.4 130.41	1 7.4948
Transfer Total	147.81	8.4948

Losses at Transfer

Initial force 1740 kN
Force at transfer Pt=P0-loft=1592.2 kN

Loading	Stresses at Transfer N/mm²		
	Top of Beam	Bottom of Beam	Centroid of Strands
Prestress Self weight of Beam	-0.031745 5.191	20.236 -3.414	15.82 -1.5391
Total	5.1593	16.822	14.281

Beam Concrete Stresses at Transfer

Stress Limitations (BS EN 1992-1-1, Clause 5.10.2.2)

Top of beam:
Compressive stress 5.1593 N/mm² is less than allowable stresses of 0.7*fcki=22.4 N/mm² and 0.6*fck=24 N/mm².

Bottom of beam:
Compressive stress 16.822 N/mm² is less than allowable stresses of 0.7*fcki=22.4 N/mm² and 0.6*fck=24 N/mm².

Long Term Losses (BS EN 1992-1-1, Clause 5.10.6(1))

Relaxation after transfer(%) slr(1)=1.5
Shrinkage per unit length sul(1)=0.3E-3
Creep coefficient φ(∞,to) crf=2

Summary

Loss	Loss of Force kN	% Loss
Relaxation Elastic Shortening	17.4 130.41	1 7.4948
Transfer Total	147.81	8.4948
Relaxation Shrinkage Creep	26.1 81.608 248.68	1.5 4.6901 14.292
Long-term Total	356.39	20.482
All Losses	504.2	28.977

Losses - Long term

Initial force 1740 kN
Final force Pf=P0-loftl=1235.8 kN

Unit-weight of in-situ concrete wc=25 kN/m³

Loading	Final Stresses N/mm²		
	Top of Beam	Bottom of Beam	Centroid of Strands
Prestress Self weight of Beam In-situ concrete	-0.024639 5.191 8.7456	15.707 -3.414 -5.7518	12.279 -1.5391 -2.593
Total	13.912	6.5409	8.147

Beam concrete stresses - Long term

Composite section

Height from beam soffit to
bottom of in-situ concrete hsis=100 mm

Perc'age of shrinkage remaining ps=25 %
Percentage pcr=25 %
Percentage stT=50 %
The net moment is Mc=F*e/1E3-Mb=-5.541 kNm
Stress at top of in-situ concrete:
ftisds=-(F/(Ai*mr)-F/(Ai*mr+Ac)-Mc*1E3*(di-Yc)/Ic)*mr*1E3
=0.63216 N/mm²
Stress at bottom of in-situ concrete:
fbisds=-(F/(Ai*mr)-F/(Ai*mr+Ac)-Mc*1E3*(hsis-Yc)/Ic)*mr*1E3
=0.8537 N/mm²
Stress at top of precast concrete beam:
ftpbds=(F/(Ai*mr+Ac)+Mc*1E3*(d-Yc)/Ic+Mb*1E3*Yt/Iyy)*1E3
=-2.9026 N/mm²
Stress at bottom of precast concrete beam:
fbpbds=(F/(Ai*mr+Ac)-Mc*1E3*Yc/Ic-Mb*1E3*Yb/Iyy)*1E3=-0.15537 N/mm²

Loading Combination 1

(no tensile stress permitted in precast beam)
Characteristic bending moment c1b(1)=204 kNm

Loading	Loading Combination 1 Stresses N/mm²			
	Top of in-situ	Top of Beam	Bottom of in-situ	Bottom of Beam
Prestress,beam and in-situ	0	13.912	0	6.5409
Dif. shrinkage	0.63216	-2.9026	0.8537	-0.15537
Combination 1	5.6864	5.0429	-3.3229	-5.3125
Total	6.3185	16.052	-2.4692	1.073

Loading Combination 1 - Stresses

Loading Combination 2

(tensile stress permitted (no visible cracking))
Characteristic bending moment c2b(1)=260 kNm

Loading	Loading Combination 2 Stresses N/mm²			
	Top of in-situ	Top of Beam	Bottom of in-situ	Bottom of Beam
Prestress,beam and in-situ	0	13.912	0	6.5409
Dif. shrinkage	0.63216	-2.9026	0.8537	-0.15537
Combination 2	6.1603	5.4632	-4.2351	-6.7709
Total	6.7924	16.472	-3.3814	-0.38529

Loading Combination 2 - Stresses

NOTE: The stresses from temperature differences should be added to the total stresses.

Top of in-situ concrete:
Compressive stress 6.7924 N/mm² is less than the maximum allowable stress of 0.6*fckc=15 N/mm².
Top of beam:
Compressive stress 16.472 N/mm² is less than the maximum allowable stress of 0.6*fck=24 N/mm².

WARNING:
Bottom of in-situ concrete:
Tensile stress 3.3814 N/mm² exceeds maximum allowable tensile stress of 2.5901 N/mm² (EN 1992-1-1 expression 3.23)

Bottom of beam:
Tensile stress 0.38529 N/mm² is less than the maximum allowable tensile stress of 3.0263 N/mm².

Location: Ex1 - 20 metre span M beam

Precast prestressed concrete M beams with in-situ top slab

Calculations for stresses at the Serviceability Limit State (SLS) to BS5400-4:1990 implemented by DOT Departmental Standard BD 44/15.

Span of beam span=20 m

Beam M 6 section properties

Depth of beam d=1040 mm
Cross-sectional area Ac=387050 mm²
Centroid above soffit Yb=409 mm
Section modulus top Zt=75.39E6 mm³
Section modulus bottom Zb=116.23E6 mm³
Unit weight of beam uwb=24 kN/m³

Concrete strengths

Strength at transfer fci=40 N/mm²
Characteristic strength fcu=50 N/mm²

Concrete moduli

Modulus of elasticity at transfer for concrete strength 40 N/mm² is:
Eci=31 kN/mm²
Modulus of elasticity for concrete strength 50 N/mm² is:
Ecb=34 kN/mm²

Composite section properties

Char strength (in-situ concrete) fcuc=40 N/mm²
Modulus of elasticity for concrete strength 40 N/mm² is:
Ecc=31 kN/mm²

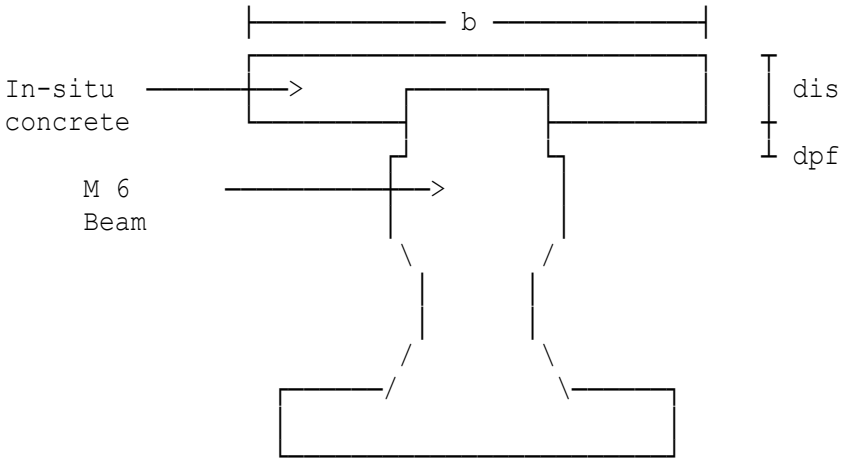

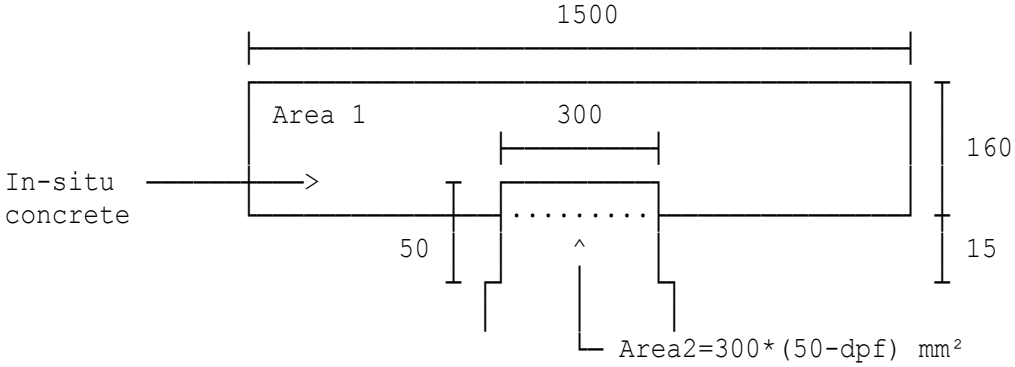

Second moment of area:
Ic=Ixx+Ac*(Yb-Yc)^2+mr*(Ii+Ai*(Yi-Yc)^2)=114.4E9 mm⁴

Depth of composite section	di=1165 mm
Initial force per strand	if=174 kN
Modulus of elasticity	Es=200 kN/mm²

Cross-section 1

Distance from mid-span of beam	csd(1)=0 m
Number of layers of strand	nls(1)=4
Height above soffit	ds(1)=60 mm
Number of strands	ns(1)=11
Height above soffit	ds(2)=110 mm
Number of strands	ns(2)=14
Height above soffit	ds(3)=880 mm
Number of strands	ns(3)=2
Height above soffit	ds(4)=930 mm
Number of strands	ns(4)=2

Short Term Losses

Relaxation at transfer (%)	str=1

Summary

Loss	Loss of Force kN	% Loss
Relaxation	50.46	1
Elastic Shortening	454.25	9.0021
Transfer Total	504.71	10.002

Losses at Transfer

Initial force	5046 kN
Force at transfer	Pt=P0-loft=4541.3 kN

Loading	Stresses at Transfer N/mm²		
	Top of Beam	Bottom of Beam	Centroid of Strands
Prestress Self weight of Beam	-0.82369 6.165	19.872 -3.996	15.878 -2.0352
Total	5.3414	15.876	13.843

Beam Concrete Stresses at Transfer

Stress Limitations

Top of beam:
Compressive stress 5.3414 N/mm² is less than allowable stresses of 0.5*fci=20 N/mm² and 0.4*fcu=20 N/mm².
Bottom of beam:
Compressive stress 15.876 N/mm² is less than allowable stresses of 0.5*fci=20 N/mm² and 0.4*fcu=20 N/mm².

Long Term Losses

Relaxation after transfer(%) slr(1)=2
Shrinkage per unit length sul(1)=0.3E-3

Summary

Loss	Loss of Force kN	% Loss
Relaxation Elastic Shortening	50.46 454.25	1 9.0021
Transfer Total	504.71	10.002
Relaxation Shrinkage Creep	100.92 241.86 586.78	2 4.7931 11.629
Long-term Total	929.56	18.422
All Losses	1434.3	28.424

Losses - Long term

Initial force 5046 kN
Final force Pf=P0-loftl=3611.7 kN

Unit-weight of in-situ concrete wc=24 kN/m³

Loading	Final Stresses N/mm²		
	Top of Beam	Bottom of Beam	Centroid of Strands
Prestress	-0.65509	15.804	12.628
Self weight of Beam	6.165	-3.996	-2.0352
In-situ concrete	3.6555	-2.3694	-1.2068
Total	9.1655	9.439	9.3862

Beam concrete stresses - Long term

Composite section

Height from beam soffit to
bottom of in-situ concrete hsis=1005 mm
Perc'age of shrinkage remaining ps=25 %
Percentage pcr=25 %
Percentage stT=67 %
The net moment is Mc=F*e/1E3-Mb=-81.196 kNm
Stress at top of in-situ concrete:
ftisds=-(F/(Ai*mr)-F/(Ai*mr+Ac)-Mc*1E3*(di-Yc)/Ic)*mr*1E3
=-0.026723 N/mm²
Stress at bottom of in-situ concrete:
fbisds=-(F/(Ai*mr)-F/(Ai*mr+Ac)-Mc*1E3*(hsis-Yc)/Ic)*mr*1E3
=0.086836 N/mm²
Stress at top of precast concrete beam:
ftpbds=(F/(Ai*mr+Ac)+Mc*1E3*(d-Yc)/Ic+Mb*1E3*Yt/Ixx)*1E3
=-0.070168 N/mm²
Stress at bottom of precast concrete beam:
fbpbds=(F/(Ai*mr+Ac)-Mc*1E3*Yc/Ic-Mb*1E3*Yb/Ixx)*1E3=0.018091 N/mm²

Combination 1 loading

Applied bending moment c1b(1)=1446 kNm

Loading	Combination 1 Stresses N/mm²			
	Top of in-situ	Top of Beam	Bottom of in-situ	Bottom of Beam
Prestress,beam and in-situ	0	9.1655	0	9.439
Dif. shrinkage	-0.026723	-0.070168	0.086836	0.018091
Combination 1	9.1289	6.8616	6.2268	-8.3636
Total	9.1021	15.957	6.3137	1.0935

Combination 1 Loading - Stresses

Combination 2 to 5 loading

Applied bending moment c2b(1)=1907 kNm

Loading	Combination 2 to 5 Stresses N/mm²			
	Top of in-situ	Top of Beam	Bottom of in-situ	Bottom of Beam
Prestress,beam and in-situ	0	9.1655	0	9.439
Dif. shrinkage	-0.026723	-0.070168	0.086836	0.018091
Combination 2-5	8.3898	6.3061	5.7227	-11.03
Total	8.363	15.401	5.8095	-1.5729

Combination 2 to 5 Loading - Stresses

Combination 3 loading. The stresses from the proforma for temperature differences should be added to the total stresses.

Top of in-situ concrete:
Compressive stress 8.363 N/mm² is less than the maximum allowable stress of 0.5*fcuc=20 N/mm².
Top of beam:
Compressive stress 15.401 N/mm² is less than the maximum allowable stress of 0.4*fcu=20 N/mm².
Bottom of in-situ concrete:
Compressive stress 5.8095 N/mm² is less than the maximum allowable stress of 0.5*fcuc=20 N/mm².
Bottom of beam:
Tensile stress 1.5729 N/mm² is less than the maximum allowable tensile stress of 3.182 N/mm².

Location: Ex2 - 25 metre span M beam

Precast prestressed concrete M beams with in-situ top slab

Calculations for stresses at the Serviceability Limit State (SLS) to BS5400-4:1990 implemented by DOT Departmental Standard BD 44/15.

Span of beam span=25 m

Beam M 9 section properties

Depth of beam d=1280 mm
Cross-sectional area Ac=425450 mm²
Centroid above soffit Yb=512 mm
Section modulus top Zt=108.09E6 mm³
Section modulus bottom Zb=161.96E6 mm³
Unit weight of beam uwb=24.25 kN/m³

Concrete strengths

Strength at transfer fci=40 N/mm²
Characteristic strength fcu=45 N/mm²

Concrete moduli

Modulus of elasticity at transfer for concrete strength 40 N/mm² is:
Eci=31 kN/mm²
Modulus of elasticity for concrete strength 45 N/mm² is:
Ecb=32.5 kN/mm²

Composite section properties

Char strength (in-situ concrete) fcuc=30 N/mm²
Modulus of elasticity for concrete strength 30 N/mm² is:
Ecc=28 kN/mm²

Item No. 1

Item weighting iw1=0.86154
X co-ordinate X(1)=15 mm
Y co-ordinate Y(1)=0 mm
X co-ordinate X(2)=985 mm
Y co-ordinate Y(2)=0 mm
X co-ordinate X(3)=985 mm
Y co-ordinate Y(3)=950 mm
X co-ordinate X(4)=1150 mm
Y co-ordinate Y(4)=1060 mm
X co-ordinate X(5)=1150 mm
Y co-ordinate Y(5)=1505 mm
X co-ordinate X(6)=650 mm
Y co-ordinate Y(6)=1505 mm
X co-ordinate X(7)=650 mm
Y co-ordinate Y(7)=1405 mm
X co-ordinate X(8)=0 mm

Y co-ordinate	Y(8)=1405 mm
X co-ordinate	X(9)=0 mm
Y co-ordinate	Y(9)=1245 mm
X co-ordinate	X(10)=350 mm
Y co-ordinate	Y(10)=1245 mm
X co-ordinate	X(11)=350 mm
Y co-ordinate	Y(11)=1230 mm
X co-ordinate	X(12)=300 mm
Y co-ordinate	Y(12)=1230 mm
X co-ordinate	X(13)=300 mm
Y co-ordinate	Y(13)=1050 mm
X co-ordinate	X(14)=420 mm
Y co-ordinate	Y(14)=970 mm
X co-ordinate	X(15)=420 mm
Y co-ordinate	Y(15)=290 mm
X co-ordinate	X(16)=340 mm
Y co-ordinate	Y(16)=210 mm
X co-ordinate	X(17)=15 mm
Y co-ordinate	Y(17)=160 mm
X co-ordinate	X(18)=15 mm
Y co-ordinate	Y(18)=0 mm

Item No. 2

Second moment of area	IXX2=82.924E9 mm^4
Area of item	A2=425450 mm^2
Centroid from X-X axis	YC2=512 mm
Item weighting	iw2=0.13846
Depth of composite section	di=1505 mm
Initial force per strand	if=125 kN
Modulus of elasticity	Es=200 kN/mm^2

Cross-section 1

Distance from mid-span of beam	csd(1)=3.5 m
Number of layers of strand	nls(1)=5
Height above soffit	ds(1)=60 mm
Number of strands	ns(1)=13
Height above soffit	ds(2)=110 mm
Number of strands	ns(2)=12
Height above soffit	ds(3)=630 mm
Number of strands	ns(3)=2
Height above soffit	ds(4)=1080 mm
Number of strands	ns(4)=2
Height above soffit	ds(5)=1230 mm
Number of strands	ns(5)=2

Short Term Losses

Relaxation at transfer (%)	str=1.1

Summary

Loss	Loss of Force kN	% Loss
Relaxation Elastic Shortening	42.625 240.06	1.1 6.1952
Transfer Total	282.69	7.2952

Losses at Transfer

Initial force 3875 kN
Force at transfer Pt=P0-loft=3592.3 kN

Loading	Stresses at Transfer N/mm²		
	Top of Beam	Bottom of Beam	Centroid of Strands
Prestress Self weight of Beam	-0.026432 6.8798	14.09 -4.5865	11.251 -2.2806
Total	6.8534	9.5037	8.9707

Beam Concrete Stresses at Transfer

Stress Limitations

Top of beam:
Compressive stress 6.8534 N/mm² is less than allowable stresses of 0.5*fci=20 N/mm² and 0.4*fcu=18 N/mm².
Bottom of beam:
Compressive stress 9.5037 N/mm² is less than allowable stresses of 0.5*fci=20 N/mm² and 0.4*fcu=18 N/mm².

Long Term Losses

Relaxation after transfer(%) slr(1)=1.2
Shrinkage per unit length sul(1)=0.3E-3

Summary

Loss	Loss of Force kN	% Loss
Relaxation Elastic Shortening	42.625 240.06	1.1 6.1952
Transfer Total	282.69	7.2952
Relaxation Shrinkage Creep	46.5 186 266.97	1.2 4.8 6.8895
Long-term Total	499.47	12.889
All Losses	782.15	20.185

Losses - Long term

Initial force 3875 kN
Final force Pf=P0-loftl=3092.8 kN

Unit-weight of in-situ concrete wc=24.6 kN/m³

Loading	Final Stresses N/mm²		
	Top of Beam	Bottom of Beam	Centroid of Strands
Prestress Self weight of Beam In-situ concrete	-0.022757 6.8798 10.813	12.131 -4.5865 -7.2085	9.6869 -2.2806 -3.5843
Total	17.67	0.33612	3.8221

Beam concrete stresses - Long term

Composite section

Height from beam soffit to
bottom of in-situ concrete hsis=160 mm
Perc'age of shrinkage remaining ps=40 %
Percentage pcr=40 %
Percentage stT=50 %
The net moment is Mc=F*e/1E3-Mb=300.14 kNm
Stress at top of in-situ concrete:
ftisds=-(F/(Ai*mr)-F/(Ai*mr+Ac)-Mc*1E3*(di-Yc)/Ic)*mr*1E3
=1.8739 N/mm²
Stress at bottom of in-situ concrete:
fbisds=-(F/(Ai*mr)-F/(Ai*mr+Ac)-Mc*1E3*(hsis-Yc)/Ic)*mr*1E3
=0.25425 N/mm²
Stress at top of precast concrete beam:

ftpbds=(F/(Ai*mr+Ac)+Mc*1E3*(d-Yc)/Ic+Mb*1E3*Yt/Ixx)*1E3
=-6.1033 N/mm²

Stress at bottom of precast concrete beam:
fbpbds=(F/(Ai*mr+Ac)-Mc*1E3*Yc/Ic-Mb*1E3*Yb/Ixx)*1E3=0.985 N/mm²

Combination 1 loading

Applied bending moment c1b(1)=400 kNm

Loading	Combination 1 Stresses N/mm²			
	Top of in-situ	Top of Beam	Bottom of in-situ	Bottom of Beam
Prestress,beam and in-situ	0	17.67	0	0.33612
Dif. shrinkage	1.8739	-6.1033	0.25425	0.985
Combination 1	1.3504	1.0959	-0.95815	-1.4102
Total	3.2242	12.662	-0.7039	-0.089056

Combination 1 Loading - Stresses

WARNING:
Bottom of in-situ concrete is in tension. Crack widths should be calculated using Clause 5.8.8.2.

WARNING:
Bottom of beam:
Tensile stress 0.089056 N/mm² exceeds maximum allowable tensile stress of 0 N/mm².

Combination 2 to 5 loading

Applied bending moment c2b(1)=525 kNm

Loading	Combination 2 to 5 Stresses N/mm²			
	Top of in-situ	Top of Beam	Bottom of in-situ	Bottom of Beam
Prestress,beam and in-situ	0	17.67	0	0.33612
Dif. shrinkage	1.8739	-6.1033	0.25425	0.985
Combination 2-5	1.5754	1.2785	-1.2576	-1.8509
Total	3.4493	12.845	-1.0033	-0.52974

Combination 2 to 5 Loading - Stresses

Combination 3 loading. The stresses from the proforma for temperature differences should be added to the total stresses.

Top of in-situ concrete:
Compressive stress 3.4493 N/mm² is less than the maximum allowable stress of 0.5*fcuc=15 N/mm².
Top of beam:
Compressive stress 12.845 N/mm² is less than the maximum allowable stress of 0.4*fcu=18 N/mm².

WARNING:
Bottom of in-situ concrete is in tension. Crack widths should be calculated using Clause 5.8.8.2.

Bottom of beam:
Tensile stress 0.52974 N/mm² is less than the maximum allowable tensile stress of 3.0187 N/mm².

Location: Ex3 - 16 metre span M2 beam

Precast prestressed concrete M beams with in-situ top slab

Calculations for stresses at the Serviceability Limit State (SLS) to BS5400-4:1990 implemented by DOT Departmental Standard BD 44/15.

Span of beam span=16 m

Beam M 2 section properties

Depth of beam d=720 mm
Cross-sectional area Ac=316650 mm²
Centroid above soffit Yb=265 mm
Section modulus top Zt=35.64E6 mm³
Section modulus bottom Zb=61.04E6 mm³
Unit weight of beam uwb=24 kN/m³

Concrete strengths

Strength at transfer fci=35 N/mm²
Characteristic strength fcu=45 N/mm²

Concrete moduli

Modulus of elasticity at transfer for concrete strength 35 N/mm² is:
Eci=29.5 kN/mm²
Modulus of elasticity for concrete strength 45 N/mm² is:
Ecb=32.5 kN/mm²

Composite section properties

Char strength (in-situ concrete) fcuc=32.5 N/mm²
Modulus of elasticity for concrete strength 32.5 N/mm² is:
Ecc=28.75 kN/mm²

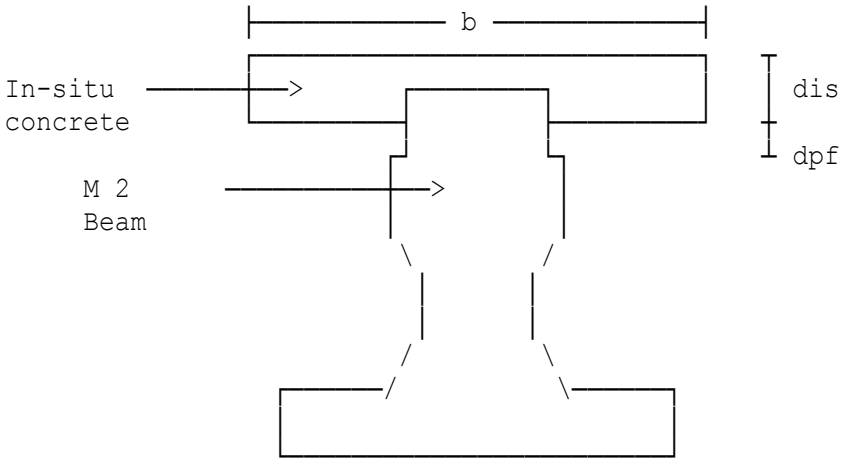

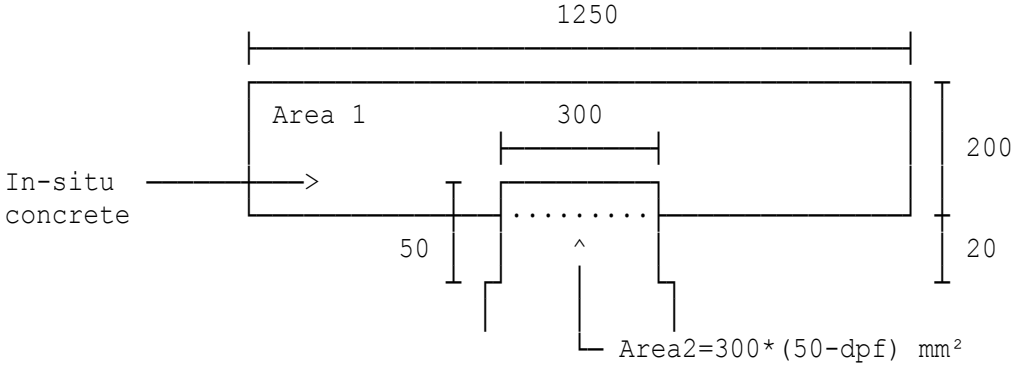

Transf'med second moment of area:
Ic=Ixx+Ac*(Yb-Yc)^2+mr*(Ii+Ai*(Yi-Yc)^2)=52.396E9 mm⁴

Depth of composite section	di=890 mm
Nominal diameter	nomd=12 mm
Nominal tensile strength	nomt=1600 N/mm²
Nominal steel area	noma=90 mm²
Characteristic breaking load	cbl=160 kN
Initial force per strand	if=100 kN
Modulus of elasticity	Es=200 kN/mm²

Cross-section 1

Distance from mid-span of beam	csd(1)=4.1 m
Number of layers of strand	nls(1)=3
Height above soffit	ds(1)=65 mm
Number of strands	ns(1)=13

WARNING:
Strand location is non-standard.

Height above soffit	ds(2)=100 mm
Number of strands	ns(2)=10

WARNING:
Strand location is non-standard.

Height above soffit	ds(3)=620 mm
Number of strands	ns(3)=2

WARNING:
Strand location is non-standard.

Bending moment from temp.loads	tlb(1)=100 kNm
Bending moment from other loads	olb(1)=108 kNm

Short Term Losses

Relaxation at transfer (%)	str=0.5

Summary

Loss	Loss of Force kN	% Loss
Relaxation	12.5	0.5
Elastic Shortening	166.87	6.6747
Transfer Total	179.37	7.1747

Losses at Transfer

Initial force 2500 kN
Force at transfer Pt=P0-loft=2320.6 kN

Loading	Stresses at Transfer N/mm²		
	Top of Beam	Bottom of Beam	Centroid of Strands
Prestress	-1.9145	12.712	10.205
Self weight of Beam	5.0438	-2.9376	-1.5697
Temporary Loads	2.8129	-1.6383	-0.87539
Other Loads	3.0379	-1.7693	-0.94542
Total	8.9802	6.3669	6.8147

Beam Concrete Stresses at Transfer

Stress Limitations

Top of beam:
Compressive stress 8.9802 N/mm² is less than allowable stresses of 0.5*fci=17.5 N/mm² and 0.4*fcu=18 N/mm².
Bottom of beam:
Compressive stress 6.3669 N/mm² is less than allowable stresses of 0.5*fci=17.5 N/mm² and 0.4*fcu=18 N/mm².

Long Term Losses

Relaxation after transfer(%) slr(1)=0.7
Shrinkage per unit length sul(1)=0.3E-3

Summary

Loss	Loss of Force kN	% Loss
Relaxation Elastic Shortening	12.5 166.87	0.5 6.6747
Transfer Total	179.37	7.1747
Relaxation Shrinkage Creep	17.5 135 189.84	0.7 5.4 7.5935
Long-term Total	342.34	13.693
All Losses	521.7	20.868

Losses - Long term

Initial force 2500 kN
Final force Pf=P0-loftl=1978.3 kN

Unit-weight of in-situ concrete wc=24 kN/m³

Loading	Final Stresses N/mm²		
	Top of Beam	Bottom of Beam	Centroid of Strands
Prestress Self weight of Beam In-situ concrete	-1.632 5.0438 3.8388	10.837 -2.9376 -2.2358	8.6998 -1.5697 -1.1947
Total	7.2506	5.6634	5.9354

Beam concrete stresses - Long term

Composite section

Height from beam soffit to
bottom of in-situ concrete hsis=690 mm
Perc'age of shrinkage remaining ps=50 %
Percentage pcr=50 %
Percentage stT=45 %
The net moment is Mc=F*e/1E3-Mb=-211.81 kNm
Stress at top of in-situ concrete:
ftisds=-(F/(Ai*mr)-F/(Ai*mr+Ac)-Mc*1E3*(di-Yc)/Ic)*mr*1E3
=0.24377 N/mm²
Stress at bottom of in-situ concrete:
fbisds=-(F/(Ai*mr)-F/(Ai*mr+Ac)-Mc*1E3*(hsis-Yc)/Ic)*mr*1E3
=0.95897 N/mm²
Stress at top of precast concrete beam:

ftpbds=(F/(Ai*mr+Ac)+Mc*1E3*(d-Yc)/Ic+Mb*1E3*Yt/Ixx)*1E3
=-2.4847 N/mm²
Stress at bottom of precast concrete beam:
fbpbds=(F/(Ai*mr+Ac)-Mc*1E3*Yc/Ic-Mb*1E3*Yb/Ixx)*1E3=0.73651 N/mm²

Combination 1 loading

Applied bending moment c1b(1)=600 kNm

Loading	Combination 1 Stresses N/mm²			
	Top of in-situ	Top of Beam	Bottom of in-situ	Bottom of Beam
Prestress,beam and in-situ	0	7.2506	0	5.6634
Dif. shrinkage	0.24377	-2.4847	0.95897	0.73651
Combination 1	4.8748	3.2395	2.5111	-5.4682
Total	5.1186	8.0054	3.4701	0.93167

Combination 1 Loading - Stresses

Combination 2 to 5 loading

Applied bending moment c2b(1)=750 kNm

Loading	Combination 2 to 5 Stresses N/mm²			
	Top of in-situ	Top of Beam	Bottom of in-situ	Bottom of Beam
Prestress,beam and in-situ	0	7.2506	0	5.6634
Dif. shrinkage	0.24377	-2.4847	0.95897	0.73651
Combination 2-5	5.223	3.4709	2.6905	-6.8353
Total	5.4668	8.2368	3.6495	-0.43539

Combination 2 to 5 Loading - Stresses

Combination 3 loading. The stresses from the proforma for temperature differences should be added to the total stresses.

Top of in-situ concrete:
Compressive stress 5.4668 N/mm² is less than the maximum allowable stress of 0.5*fcuc=16.25 N/mm².
Top of beam:
Compressive stress 8.2368 N/mm² is less than the maximum allowable stress of 0.4*fcu=18 N/mm².
Bottom of in-situ concrete:
Compressive stress 3.6495 N/mm² is less than the maximum allowable stress of 0.5*fcuc=16.25 N/mm².
Bottom of beam:
Tensile stress 0.43539 N/mm² is less than the maximum allowable

tensile stress of 3.0187 N/mm².

Location: Ex1 - 20 metre span M beam

Precast prestressed concrete M beams with in-situ top slab

Calculations for stresses at the Serviceability Limit State (SLS) in accordance with BS EN 1992-2:2005 and NA to BS EN 1992-2:2005.

Beam span under consideration span=20 m

Beam M 6 section properties

Depth of beam	d=1040 mm
Cross-sectional area	Ac=387050 mm²
Centroid above soffit	Yb=409 mm
Section modulus top	Zt=75.39E6 mm³
Section modulus bottom	Zb=116.23E6 mm³
Unit weight of beam	uwb=24 kN/m³

Concrete compressive strengths

Characteristic cylinder strength	fcki=32 N/mm² (transfer)
Characteristic cylinder strength	fck=40 N/mm²

Concrete moduli (short-term)

Concrete modulus of elasticity	Ecmi=33 kN/mm² (transfer)
Concrete modulus of elasticity	Ecmb=35 kN/mm²

Composite section properties

Char strength (in-situ concrete)	fckc=40 N/mm²
Short-term modulus of elasticity for in-situ concrete	Ecmc=35 kN/mm²

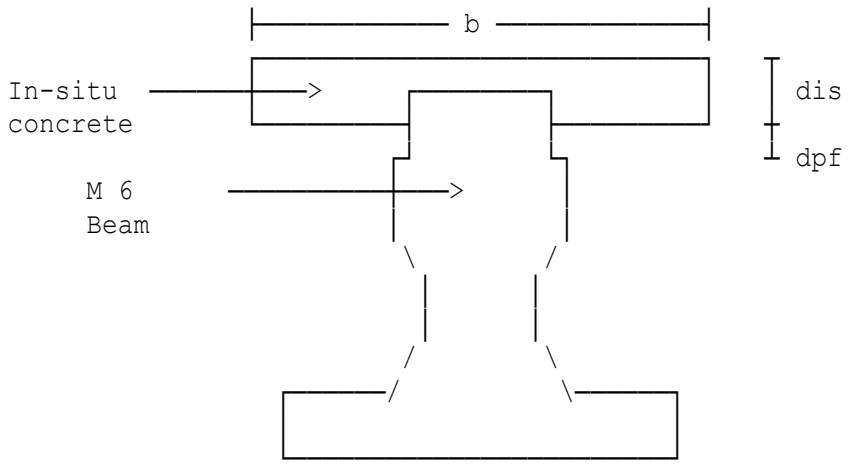

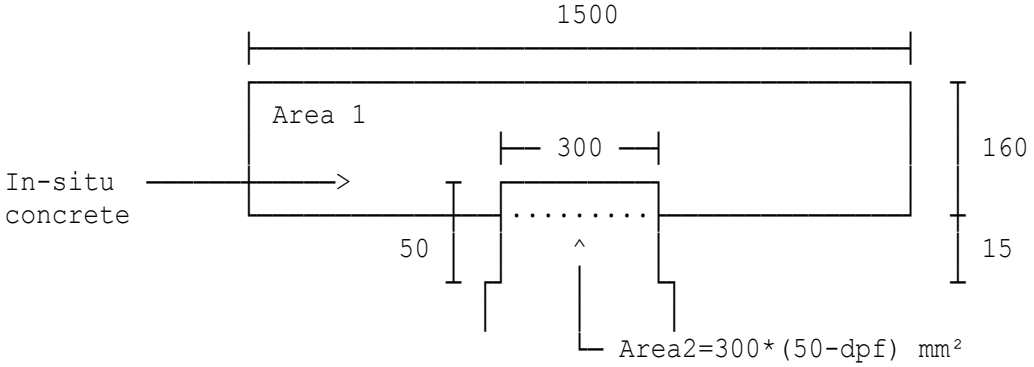

Second moment of area Ic=Iyy+Ac*(Yb-Yc)^2+mr*(Ii+Ai*(Yi -Yc)^2)=114.4E9 mm⁴
Depth of composite section di=1165 mm
Modulus of elasticity (strand) Ep=195 kN/mm²

Cross-section 1

Distance from mid-span of beam csd(1)=0 m
Number of layers of strand nls(1)=4
Height above soffit ds(1)=60 mm
Number of strands ns(1)=11
Height above soffit ds(2)=110 mm
Number of strands ns(2)=14
Height above soffit ds(3)=880 mm
Number of strands ns(3)=2
Height above soffit ds(4)=930 mm
Number of strands ns(4)=2

Short Term Losses (BS EN 1992-1-1)

Relaxation at transfer (%) str=1

Summary

Loss	Loss of Force kN	% Loss
Relaxation	50.46	1
Elastic Shortening	384.06	7.6112
Transfer Total	434.52	8.6112

Losses at Transfer

Initial force 5046 kN
Prestress force at transfer Pt=P0-loft=4611.5 kN

Loading	Stresses at Transfer N/mm²		
	Top of Beam	Bottom of Beam	Centroid of Strands
Prestress Self weight of Beam	-0.83642 6.165	20.179 -3.996	16.124 -2.0352
Total	5.3286	16.183	14.089

Beam Concrete Stresses at Transfer

Stress Limitations (BS EN 1992-1-1, Clause 5.10.2.2)

Top of beam:
Compressive stress 5.3286 N/mm² is less than allowable stresses of 0.7*fcki=22.4 N/mm² and 0.6*fck=24 N/mm².
Bottom of beam:
Compressive stress 16.183 N/mm² is less than allowable stresses of 0.7*fcki=22.4 N/mm² and 0.6*fck=24 N/mm².

Long Term Losses (BS EN 1992-1-1, Clause 5.10.6(1))

Relaxation after transfer(%) slr(1)=2
Shrinkage per unit length sul(1)=0.3E-3
Creep coefficient φ(∞,to) crf=2

Summary

Loss	Loss of Force kN	% Loss
Relaxation Elastic Shortening	50.46 384.06	1 7.6112
Transfer Total	434.52	8.6112
Relaxation Shrinkage Creep	100.92 235.81 687.98	2 4.6733 13.634
Long-term Total	1024.7	20.308
All Losses	1459.2	28.919

Losses - Long term

Initial force 5046 kN
Final prestress force Pf=P0-loftl=3586.8 kN

Unit-weight of in-situ concrete wc=24 kN/m³

Loading	Final Stresses N/mm²		
	Top of Beam	Bottom of Beam	Centroid of Strands
Prestress	-0.65056	15.695	12.541
Self weight of Beam	6.165	-3.996	-2.0352
In-situ concrete	3.6555	-2.3694	-1.2068
Total	9.17	9.3297	9.2989

Beam concrete stresses - Long term

Composite section

Height from beam soffit to
bottom of in-situ concrete hsis=1005 mm
Perc'age of shrinkage remaining ps=25 %
Percentage pcr=25 %
Percentage stT=67 %
The net moment is Mc=F*e/1E3-Mb=-166.22 kNm
Stress at top of in-situ concrete:
ftisds=-(F/(Ai*mr)-F/(Ai*mr+Ac)-Mc*1E3*(di-Yc)/Ic)*mr*1E3
=0.09964 N/mm²
Stress at bottom of in-situ concrete:
fbisds=-(F/(Ai*mr)-F/(Ai*mr+Ac)-Mc*1E3*(hsis-Yc)/Ic)*mr*1E3
=0.33212 N/mm²
Stress at top of precast concrete beam:
ftpbds=(F/(Ai*mr+Ac)+Mc*1E3*(d-Yc)/Ic+Mb*1E3*Yt/Iyy)*1E3
=-0.55436 N/mm²
Stress at bottom of precast concrete beam:
fbpbds=(F/(Ai*mr+Ac)-Mc*1E3*Yc/Ic-Mb*1E3*Yb/Iyy)*1E3
=0.15241 N/mm²

Loading Combination 1

(no tensile stress permitted in precast beam)
Characteristic bending moment c1b(1)=1200 kNm

Loading	Loading Combination 1 Stresses N/mm²			
	Top of in-situ	Top of Beam	Bottom of in-situ	Bottom of Beam
Prestress,beam and in-situ	0	9.17	0	9.3297
Dif. shrinkage	0.09964	-0.55436	0.33212	0.15241
Combination 1	9.846	7.4007	6.716	-6.9407
Total	9.9456	16.016	7.0481	2.5414

Loading Combination 1 - Stresses

Loading Combination 2

(tensile stress permitted (no visible cracking))
Characteristic bending moment c2b(1)=2075 kNm

Loading	Loading Combination 2 Stresses N/mm²			
	Top of in-situ	Top of Beam	Bottom of in-situ	Bottom of Beam
Prestress,beam and in-situ	0	9.17	0	9.3297
Dif. shrinkage	0.09964	-0.55436	0.33212	0.15241
Combination 2	9.1289	6.8616	6.2268	-12.002
Total	9.2285	15.477	6.5589	-2.5195

Loading Combination 2 - Stresses

NOTE: The stresses from temperature differences should be added to the total stresses.

Top of in-situ concrete:
Compressive stress 9.2285 N/mm² is less than the maximum allowable stress of 0.6*fckc=24 N/mm².
Top of beam:
Compressive stress 15.477 N/mm² is less than the maximum allowable stress of 0.6*fck=24 N/mm².
Bottom of in-situ concrete:
Compressive stress 6.5589 N/mm² is less than the maximum allowable stress of 0.6*fckc=24 N/mm².
Bottom of beam:
Tensile stress 2.5195 N/mm² is less than the maximum allowable tensile stress of 3.0263 N/mm².

Location: Ex2 - 25 metre span M beam

Precast prestressed concrete M beams with in-situ top slab

Calculations for stresses at the Serviceability Limit State (SLS) in accordance with BS EN 1992-2:2005 and NA to BS EN 1992-2:2005.

Beam span under consideration span=25 m

Beam M 9 section properties

Depth of beam	d=1280 mm
Cross-sectional area	Ac=425450 mm²
Centroid above soffit	Yb=512 mm
Section modulus top	Zt=108.09E6 mm³
Section modulus bottom	Zb=161.96E6 mm³
Unit weight of beam	uwb=24.25 kN/m³

Concrete compressive strengths

Characteristic cylinder strength	fcki=32 N/mm² (transfer)
Characteristic cylinder strength	fck=36 N/mm²

Concrete moduli (short-term)

Concrete modulus of elasticity	Ecmi=31 kN/mm² (transfer)
Concrete modulus of elasticity	Ecmb=32.5 kN/mm²

Composite section properties

Char strength (in-situ concrete)	fckc=24 N/mm²
Short-term modulus of elasticity for in-situ concrete	Ecmc=28 kN/mm²

Item No. 1

Item weighting	iw1=0.86154
X co-ordinate	X(1)=15 mm
Y co-ordinate	Y(1)=0 mm
X co-ordinate	X(2)=985 mm
Y co-ordinate	Y(2)=0 mm
X co-ordinate	X(3)=985 mm
Y co-ordinate	Y(3)=950 mm
X co-ordinate	X(4)=1150 mm
Y co-ordinate	Y(4)=1060 mm
X co-ordinate	X(5)=1150 mm
Y co-ordinate	Y(5)=1505 mm
X co-ordinate	X(6)=650 mm
Y co-ordinate	Y(6)=1505 mm
X co-ordinate	X(7)=650 mm
Y co-ordinate	Y(7)=1405 mm
X co-ordinate	X(8)=0 mm
Y co-ordinate	Y(8)=1405 mm
X co-ordinate	X(9)=0 mm

Y co-ordinate	Y(9)=1245 mm
X co-ordinate	X(10)=350 mm
Y co-ordinate	Y(10)=1245 mm
X co-ordinate	X(11)=350 mm
Y co-ordinate	Y(11)=1230 mm
X co-ordinate	X(12)=300 mm
Y co-ordinate	Y(12)=1230 mm
X co-ordinate	X(13)=300 mm
Y co-ordinate	Y(13)=1050 mm
X co-ordinate	X(14)=420 mm
Y co-ordinate	Y(14)=970 mm
X co-ordinate	X(15)=420 mm
Y co-ordinate	Y(15)=290 mm
X co-ordinate	X(16)=340 mm
Y co-ordinate	Y(16)=210 mm
X co-ordinate	X(17)=15 mm
Y co-ordinate	Y(17)=160 mm
X co-ordinate	X(18)=15 mm
Y co-ordinate	Y(18)=0 mm

Item No. 2

Second moment of area	IXX2=82.924E9 mm^4
Area of item	A2=425450 mm^2
Centroid from X-X axis	YC2=512 mm
Item weighting	iw2=0.13846
Depth of composite section	di=1505 mm
Modulus of elasticity (strand)	Ep=200 kN/mm^2

Cross-section 1

Distance from mid-span of beam	csd(1)=3.5 m
Number of layers of strand	nls(1)=5
Height above soffit	ds(1)=60 mm
Number of strands	ns(1)=13
Height above soffit	ds(2)=110 mm
Number of strands	ns(2)=12
Height above soffit	ds(3)=630 mm
Number of strands	ns(3)=2
Height above soffit	ds(4)=1080 mm
Number of strands	ns(4)=2
Height above soffit	ds(5)=1230 mm
Number of strands	ns(5)=2

Short Term Losses (BS EN 1992-1-1)

Relaxation at transfer (%)	str=1.1

Summary

Loss	Loss of Force kN	% Loss
Relaxation Elastic Shortening	42.625 225.91	1.1 5.83
Transfer Total	268.54	6.93

Losses at Transfer

Initial force 3875 kN
Prestress force at transfer Pt=P0-loft=3606.5 kN

Loading	Stresses at Transfer N/mm²		
	Top of Beam	Bottom of Beam	Centroid of Strands
Prestress Self weight of Beam	-0.026536 6.8798	14.146 -4.5865	11.296 -2.2806
Total	6.8533	9.5592	9.015

Beam Concrete Stresses at Transfer

Stress Limitations (BS EN 1992-1-1, Clause 5.10.2.2)

Top of beam:
Compressive stress 6.8533 N/mm² is less than allowable stresses of 0.7*fcki=22.4 N/mm² and 0.6*fck=21.6 N/mm².
Bottom of beam:
Compressive stress 9.5592 N/mm² is less than allowable stresses of 0.7*fcki=22.4 N/mm² and 0.6*fck=21.6 N/mm².

Long Term Losses (BS EN 1992-1-1, Clause 5.10.6(1))

Relaxation after transfer(%) slr(1)=1.2
Shrinkage per unit length sul(1)=0.3E-3
Creep coefficient φ(∞,to) crf=2

Summary

Loss	Loss of Force kN	% Loss
Relaxation Elastic Shortening	42.625 225.91	1.1 5.83
Transfer Total	268.54	6.93
Relaxation Shrinkage Creep	46.5 186 343.96	1.2 4.8 8.8763
Long-term Total	576.46	14.876
All Losses	844.99	21.806

Losses - Long term

Initial force 3875 kN
Final prestress force Pf=P0-loftl=3030 kN

Unit-weight of in-situ concrete wc=24.6 kN/m³

Loading	Final Stresses N/mm²		
	Top of Beam	Bottom of Beam	Centroid of Strands
Prestress Self weight of Beam In-situ concrete	-0.022295 6.8798 10.813	11.885 -4.5865 -7.2085	9.4901 -2.2806 -3.5843
Total	17.67	0.08965	3.6253

Beam concrete stresses - Long term

Composite section

Height from beam soffit to
bottom of in-situ concrete hsis=160 mm
Perc'age of shrinkage remaining ps=40 %
Percentage pcr=40 %
Percentage stT=50 %
The net moment is Mc=F*e/1E3-Mb=318.6 kNm
Stress at top of in-situ concrete:
ftisds=-(F/(Ai*mr)-F/(Ai*mr+Ac)-Mc*1E3*(di-Yc)/Ic)*mr*1E3
=2.4533 N/mm²
Stress at bottom of in-situ concrete:
fbisds=-(F/(Ai*mr)-F/(Ai*mr+Ac)-Mc*1E3*(hsis-Yc)/Ic)*mr*1E3
=0.7341 N/mm²
Stress at top of precast concrete beam:

ftpbds=(F/(Ai*mr+Ac)+Mc*1E3*(d-Yc)/Ic+Mb*1E3*Yt/Iyy)*1E3
=-8.4125 N/mm²

Stress at bottom of precast concrete beam:
fbpbds=(F/(Ai*mr+Ac)-Mc*1E3*Yc/Ic-Mb*1E3*Yb/Iyy)*1E3=1.1362 N/mm²

Loading Combination 1

(no tensile stress permitted in precast beam)
Characteristic bending moment c1b(1)=400 kNm

Loading	Loading Combination 1 Stresses N/mm²			
	Top of in-situ	Top of Beam	Bottom of in-situ	Bottom of Beam
Prestress,beam and in-situ	0	17.67	0	0.08965
Dif. shrinkage	2.4533	-8.4125	0.7341	1.1362
Combination 1	1.3504	1.0959	-0.95815	-1.4102
Total	3.8037	10.354	-0.22405	-0.18435

Loading Combination 1 - Stresses

WARNING:
Bottom of in-situ concrete is in tension. Crack widths should be calculated to BS EN 1992-2.

WARNING:
Bottom of beam:
Tensile stress 0.18435 N/mm² exceeds maximum allowable tensile stress of 0 N/mm².

Loading Combination 2

(tensile stress permitted (no visible cracking))
Characteristic bending moment c2b(1)=525 kNm

Loading	Loading Combination 2 Stresses N/mm²			
	Top of in-situ	Top of Beam	Bottom of in-situ	Bottom of Beam
Prestress,beam and in-situ	0	17.67	0	0.08965
Dif. shrinkage	2.4533	-8.4125	0.7341	1.1362
Combination 2	1.5754	1.2785	-1.2576	-1.8509
Total	4.0287	10.536	-0.52347	-0.62503

Loading Combination 2 - Stresses

NOTE: The stresses from temperature differences should be added to the total stresses.

Top of in-situ concrete:
Compressive stress 4.0287 N/mm² is less than the maximum allowable stress of 0.6*fckc=14.4 N/mm².
Top of beam:
Compressive stress 10.536 N/mm² is less than the maximum allowable stress of 0.6*fck=21.6 N/mm².

WARNING:
Bottom of in-situ concrete is in tension. Crack widths should be calculated to BS EN 1992-2.

Bottom of beam:
Tensile stress 0.62503 N/mm² is less than the maximum allowable tensile stress of 2.8102 N/mm².

Location: Ex3 - 16 metre span M2 beam

Precast prestressed concrete M beams with in-situ top slab

Calculations for stresses at the Serviceability Limit State (SLS) in accordance with BS EN 1992-2:2005 and NA to BS EN 1992-2:2005.

Beam span under consideration span=16 m

Beam M 2 section properties

Depth of beam	d=720 mm
Cross-sectional area	Ac=316650 mm²
Centroid above soffit	Yb=265 mm
Section modulus top	Zt=35.64E6 mm³
Section modulus bottom	Zb=61.04E6 mm³
Unit weight of beam	uwb=24 kN/m³

Concrete compressive strengths

Characteristic cylinder strength	fcki=28 N/mm² (transfer)
Characteristic cylinder strength	fck=36 N/mm²

Concrete moduli (short-term)

Concrete modulus of elasticity	Ecmi=29.5 kN/mm² (transfer)
Concrete modulus of elasticity	Ecmb=32.5 kN/mm²

Composite section properties

Char strength (in-situ concrete)	fckc=24 N/mm²
Short-term modulus of elasticity for in-situ concrete	Ecmc=28.75 kN/mm²

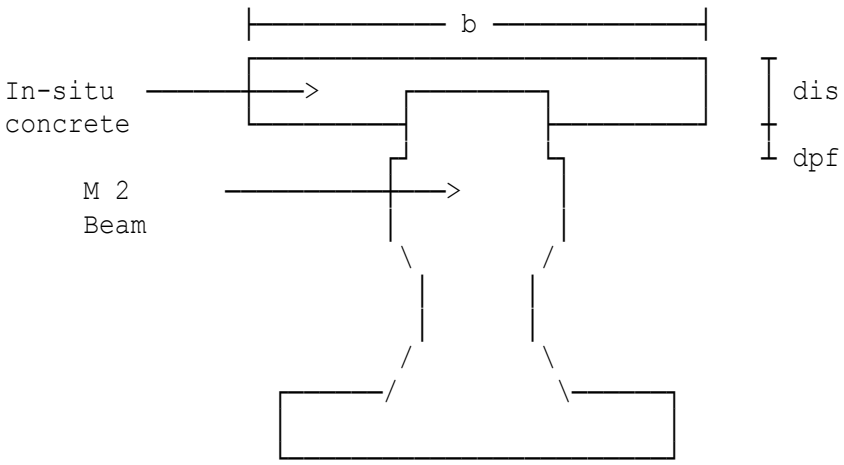

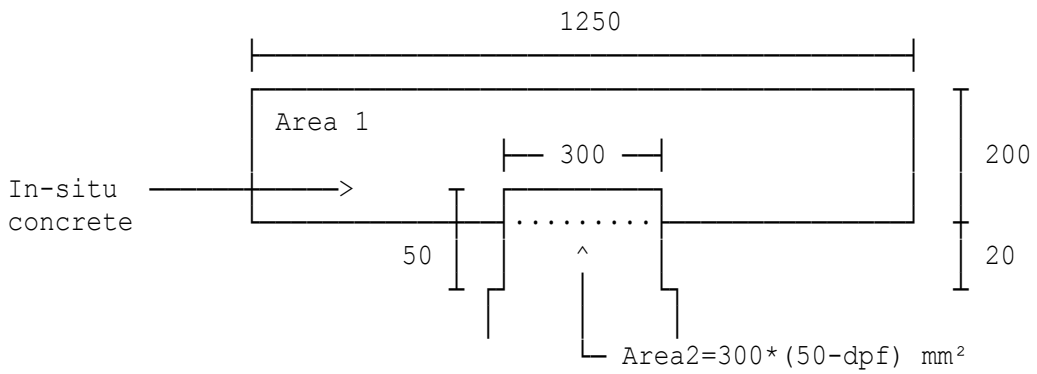

Transf'med second moment of area	Ic=Iyy+Ac*(Yb-Yc)^2+mr*(Ii+Ai*(Yi -Yc)^2)=52.396E9 mm⁴
Depth of composite section	di=890 mm
Nominal diameter	nomd=12 mm
Nominal tensile strength	nomt=1600 N/mm²
Nominal steel area	noma=90 mm²
Char breaking load (strand)	fpk=160 kN
Initial force per strand	ipf=100 kN
Modulus of elasticity (strand)	Ep=200 kN/mm²

Cross-section 1

Distance from mid-span of beam	csd(1)=4.1 m
Number of layers of strand	nls(1)=3
Height above soffit	ds(1)=65 mm
Number of strands	ns(1)=13

WARNING:
Strand location is non-standard.

Height above soffit	ds(2)=100 mm
Number of strands	ns(2)=10

WARNING:
Strand location is non-standard.

Height above soffit	ds(3)=620 mm
Number of strands	ns(3)=2

WARNING:
Strand location is non-standard.

Bending moment from temp.loads	tlb(1)=100 kNm
Bending moment from other loads	olb(1)=108 kNm

Short Term Losses (BS EN 1992-1-1)

Relaxation at transfer (%)	str=0.5

Summary

Loss	Loss of Force kN	% Loss
Relaxation	12.5	0.5
Elastic Shortening	156.38	6.2551
Transfer Total	168.88	6.7551

Losses at Transfer

Initial force 2500 kN
Prestress force at transfer Pt=P0-loft=2331.1 kN

Loading	Stresses at Transfer N/mm²		
	Top of Beam	Bottom of Beam	Centroid of Strands
Prestress	-1.9231	12.77	10.251
Self weight of Beam	5.0438	-2.9376	-1.5697
Temporary Loads	2.8129	-1.6383	-0.87539
Other Loads	3.0379	-1.7693	-0.94542
Total	8.9715	6.4243	6.8609

Beam Concrete Stresses at Transfer

Stress Limitations (BS EN 1992-1-1, Clause 5.10.2.2)

Top of beam:
Compressive stress 8.9715 N/mm² is less than allowable stresses of 0.7*fcki=19.6 N/mm² and 0.6*fck=21.6 N/mm².
Bottom of beam:
Compressive stress 6.4243 N/mm² is less than allowable stresses of 0.7*fcki=19.6 N/mm² and 0.6*fck=21.6 N/mm².

Long Term Losses (BS EN 1992-1-1, Clause 5.10.6(1))

Relaxation after transfer(%) slr(1)=0.7
Shrinkage per unit length sul(1)=0.3E-3
Creep coefficient φ(∞,to) crf=2

Summary

Loss	Loss of Force kN	% Loss
Relaxation Elastic Shortening	12.5 156.38	0.5 6.2551
Transfer Total	168.88	6.7551
Relaxation Shrinkage Creep	17.5 135 214.24	0.7 5.4 8.5694
Long-term Total	366.74	14.669
All Losses	535.61	21.424

Losses - Long term

Initial force 2500 kN
Final prestress force Pf=P0-loftl=1964.4 kN

Unit-weight of in-situ concrete wc=24 kN/m³

Loading	Final Stresses N/mm²		
	Top of Beam	Bottom of Beam	Centroid of Strands
Prestress Self weight of Beam In-situ concrete	-1.6206 5.0438 3.8388	10.761 -2.9376 -2.2358	8.6386 -1.5697 -1.1947
Total	7.2621	5.5872	5.8743

Beam concrete stresses - Long term

Composite section

Height from beam soffit to
bottom of in-situ concrete hsis=690 mm
Perc'age of shrinkage remaining ps=50 %
Percentage pcr=50 %
Percentage stT=45 %
The net moment is Mc=F*e/1E3-Mb=-254.66 kNm
Stress at top of in-situ concrete:
ftisds=-(F/(Ai*mr)-F/(Ai*mr+Ac)-Mc*1E3*(di-Yc)/Ic)*mr*1E3
=0.28915 N/mm²
Stress at bottom of in-situ concrete:
fbisds=-(F/(Ai*mr)-F/(Ai*mr+Ac)-Mc*1E3*(hsis-Yc)/Ic)*mr*1E3
=1.149 N/mm²
Stress at top of precast concrete beam:

ftpbds=(F/(Ai*mr+Ac)+Mc*1E3*(d-Yc)/Ic+Mb*1E3*Yt/Iyy)*1E3
=-2.9702 N/mm²
Stress at bottom of precast concrete beam:
fbpbds=(F/(Ai*mr+Ac)-Mc*1E3*Yc/Ic-Mb*1E3*Yb/Iyy)*1E3=0.8803 N/mm²

Loading Combination 1

(no tensile stress permitted in precast beam)
Characteristic bending moment c1b(1)=600 kNm

Loading	Loading Combination 1 Stresses N/mm²			
	Top of in-situ	Top of Beam	Bottom of in-situ	Bottom of Beam
Prestress,beam and in-situ	0	7.2621	0	5.5872
Dif. shrinkage	0.28915	-2.9702	1.149	0.8803
Combination 1	4.8748	3.2395	2.5111	-5.4682
Total	5.1639	7.5313	3.6602	0.99927

Loading Combination 1 - Stresses

Loading Combination 2

(tensile stress permitted (no visible cracking))
Characteristic bending moment c2b(1)=750 kNm

Loading	Loading Combination 2 Stresses N/mm²			
	Top of in-situ	Top of Beam	Bottom of in-situ	Bottom of Beam
Prestress,beam and in-situ	0	7.2621	0	5.5872
Dif. shrinkage	0.28915	-2.9702	1.149	0.8803
Combination 2	5.223	3.4709	2.6905	-6.8353
Total	5.5121	7.7627	3.8396	-0.36779

Loading Combination 2 - Stresses

NOTE: The stresses from temperature differences should be added to the total stresses.

Top of in-situ concrete:
Compressive stress 5.5121 N/mm² is less than the maximum allowable stress of 0.6*fckc=14.4 N/mm².
Top of beam:
Compressive stress 7.7627 N/mm² is less than the maximum allowable stress of 0.6*fck=21.6 N/mm².

Bottom of in-situ concrete:
Compressive stress 3.8396 N/mm² is less than the maximum allowable stress of 0.6*fckc=14.4 N/mm².
Bottom of beam:
Tensile stress 0.36779 N/mm² is less than the maximum allowable tensile stress of 2.8102 N/mm².

Location: Ex1 - 20 metre span UM beam

Precast prestressed concrete UM beams with in-situ top slab

Calculations for stresses at the Serviceability Limit State (SLS) to BS5400-4:1990 implemented by DOT Departmental Standard BD 44/15.

Span of beam span=20 m

Beam UM 6 section properties

Depth of beam d=1040 mm
Cross-sectional area Ac=446150 mm²
Centroid above soffit Yb=387.7 mm
Section modulus top Zt=65.86E6 mm³
Section modulus bottom Zb=111.63E6 mm³
Unit weight of beam uwb=25 kN/m³

Concrete strengths

Strength at transfer fci=40 N/mm²
Characteristic strength fcu=50 N/mm²

Concrete moduli

Modulus of elasticity at transfer for concrete strength 40 N/mm² is:
Eci=31 kN/mm²
Modulus of elasticity for concrete strength 50 N/mm² is:
Ecb=34 kN/mm²

Composite section properties

Char strength of in-situ concrete fcuc=40 N/mm²
Modulus of elasticity for concrete strength 40 N/mm² is:
Ecc=31 kN/mm²

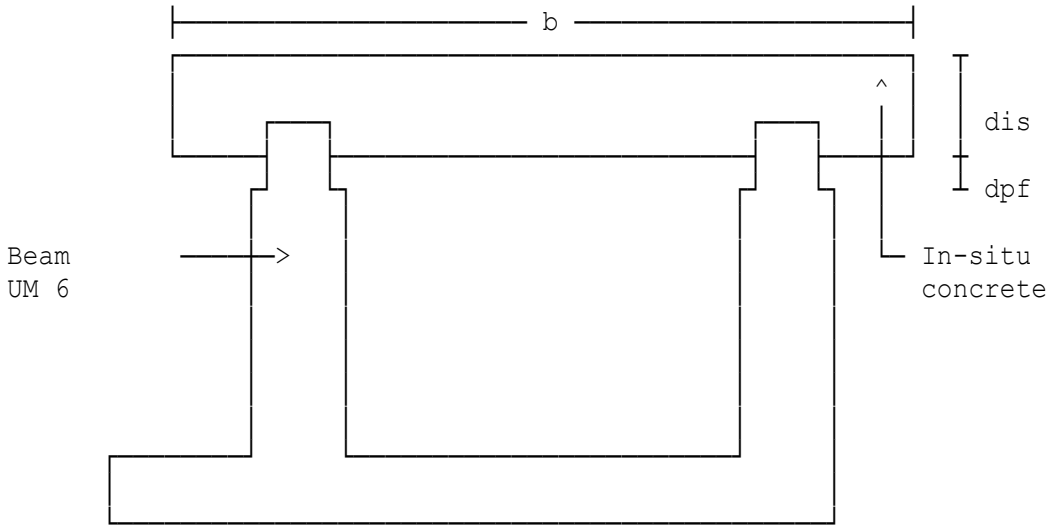

Breadth of slab b=1500 mm

Depth of slab dis=160 mm
Depth of permanent formwork dpf=15 mm

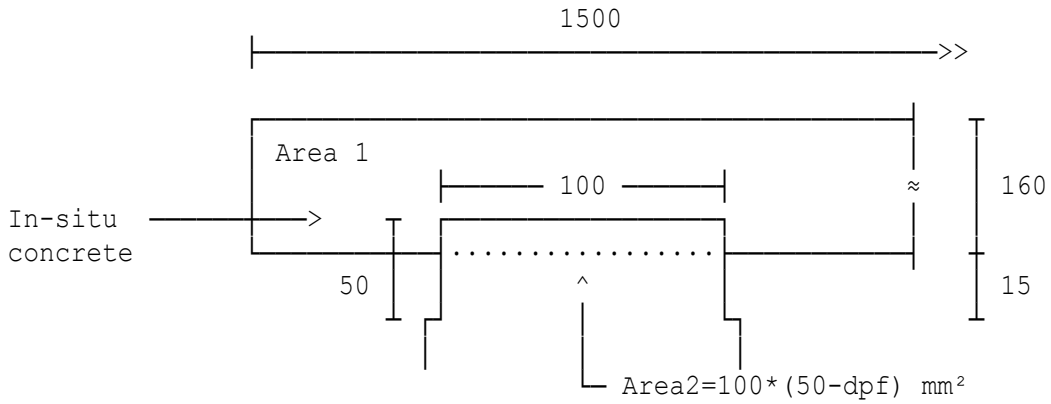

Second moment of area Ic=Ixx+Ac*(Yb-Yc)^2+mr*(Ii+Ai*(Yi -Yc)^2)=118.59E9 mm⁴
Depth of composite section di=1165 mm
Initial force per strand if=174 kN
Modulus of elasticity Es=200 kN/mm²

Cross-section 1

Distance from mid-span of beam csd(1)=0 m
Number of layers of strand nls(1)=4
Height above soffit ds(1)=60 mm
Number of strands ns(1)=14
Height above soffit ds(2)=110 mm
Number of strands ns(2)=12
Height above soffit ds(3)=700 mm
Number of strands ns(3)=2
Height above soffit ds(4)=940 mm
Number of strands ns(4)=2

Short Term Losses

Relaxation at transfer (%) str=1

Summary

Loss	Loss of Force kN	% Loss
Relaxation	52.2	1
Elastic Shortening	448.43	8.5906
Transfer Total	500.63	9.5906

Losses at Transfer

Initial force 5220 kN
Force at transfer Pt=P0-loft=4719.4 kN

Loading	Stresses at Transfer N/mm²		
	Top of Beam	Bottom of Beam	Centroid of Strands
Prestress Self weight of Beam	-4.1009 8.4055	19.303 -4.9959	15.222 -2.6592
Total	4.3045	14.307	12.563

Beam Concrete Stresses at Transfer

Stress Limitations

Top of beam:
Compressive stress 4.3045 N/mm² is less than allowable stresses of 0.5*fci=20 N/mm² and 0.4*fcu=20 N/mm².
Bottom of beam:
Compressive stress 14.307 N/mm² is less than allowable stresses of 0.5*fci=20 N/mm² and 0.4*fcu=20 N/mm².

Long Term Losses

Relaxation after transfer(%) slr(1)=2
Shrinkage per unit length sul(1)=0.3E-3

Summary

Loss	Loss of Force kN	% Loss
Relaxation Elastic Shortening	52.2 448.43	1 8.5906
Transfer Total	500.63	9.5906
Relaxation Shrinkage Creep	104.4 250.2 521.27	2 4.7931 9.986
Long-term Total	875.87	16.779
All Losses	1376.5	26.37

Losses - Long term

Initial force 5220 kN
Final force Pf=P0-loftl=3843.5 kN
Unit-weight of in-situ concrete wc=24 kN/m³

Loading	Final Stresses N/mm²		
	Top of Beam	Bottom of Beam	Centroid of Strands
Prestress	-3.3398	15.72	12.397
Self weight of Beam	8.4055	-4.9959	-2.6592
In-situ concrete	4.2141	-2.5047	-1.3332
Total	9.2797	8.2196	8.4045

Beam concrete stresses - Long term

Composite section

Height from beam soffit to
bottom of in-situ concrete hsis=1005 mm
Perc'age of shrinkage remaining ps=25 %
Percentage pcr=25 %
Percentage stT=67 %
The net moment is Mc=F*e/1E3-Mb=-15.561 kNm
Stress at top of in-situ concrete:
ftisds=-(F/(Ai*mr)-F/(Ai*mr+Ac)-Mc*1E3*(di-Yc)/Ic)*mr*1E3
=-0.010076 N/mm²
Stress at bottom of in-situ concrete:
fbisds=-(F/(Ai*mr)-F/(Ai*mr+Ac)-Mc*1E3*(hsis-Yc)/Ic)*mr*1E3
=0.010919 N/mm²
Stress at top of precast concrete beam:
ftpbds=(F/(Ai*mr+Ac)+Mc*1E3*(d-Yc)/Ic+Mb*1E3*Yt/Ixx)*1E3
=0.43493E-3 N/mm²
Stress at bottom of precast concrete beam:
fbpbds=(F/(Ai*mr+Ac)-Mc*1E3*Yc/Ic-Mb*1E3*Yb/Ixx)*1E3
=-0.40407E-3 N/mm²

Combination 1 loading

Applied bending moment c1b(1)=1450 kNm

Loading	Combination 1 Stresses N/mm²			
	Top of in-situ	Top of Beam	Bottom of in-situ	Bottom of Beam
Prestress,beam and in-situ	0	9.2797	0	8.2196
Dif. shrinkage	-0.010076	0.43493E-3	0.010919	-0.40407E-3
Combination 1	9.0639	6.9557	6.3654	-7.6735
Total	9.0538	16.236	6.3764	0.54571

Combination 1 Loading - Stresses

Combination 2 to 5 loading

Applied bending moment c2b(1)=2100 kNm

Loading	Final Stresses N/mm²			
	Top of in-situ	Top of Beam	Bottom of in-situ	Bottom of Beam
Prestress,beam and in-situ	0	9.2797	0	8.2196
Dif. shrinkage	-0.010076	0.43493E-3	0.010919	-0.40407E-3
Combination 2-5	9.5171	7.3035	6.6837	-11.113
Total	9.507	16.584	6.6946	-2.8941

Combination 2 to 5 Loading - Stresses

Combination 3 loading. The stresses from the Proforma for temperature differences should be added to the total stresses.
Top of in-situ concrete:
Compressive stress 9.507 N/mm² is less than the maximum allowable stress of 0.5*fcuc=20 N/mm².
Top of beam:
Compressive stress 16.584 N/mm² is less than the maximum allowable stress of 0.4*fcu=20 N/mm².
Bottom of in-situ concrete:
Compressive stress 6.6946 N/mm² is less than the maximum allowable stress of 0.5*fcuc=20 N/mm².
Bottom of beam:
Tensile stress 2.8941 N/mm² is less than the maximum allowable tensile stress of 3.182 N/mm².

Location: Ex2 - 16 metre span UM3 beam

Precast prestressed concrete UM beams with in-situ top slab

Calculations for stresses at the Serviceability Limit State (SLS) to BS5400-4:1990 implemented by DOT Departmental Standard BD 44/15.

Span of beam span=16 m

Beam UM 3 section properties

Depth of beam d=800 mm
Cross-sectional area Ac=374150 mm²
Centroid above soffit Yb=287.9 mm
Section modulus top Zt=38.36E6 mm³
Section modulus bottom Zb=68.82E6 mm³
Unit weight of beam uwb=24.6 kN/m³

Concrete strengths

Strength at transfer fci=45 N/mm²
Characteristic strength fcu=50 N/mm²

Concrete moduli

Modulus of elasticity at transfer for concrete strength 45 N/mm² is:
Eci=32.5 kN/mm²
Modulus of elasticity for concrete strength 50 N/mm² is:
Ecb=34 kN/mm²

Composite section properties

Char strength of in-situ concrete fcuc=35 N/mm²
Modulus of elasticity for concrete strength 35 N/mm² is:
Ecc=29.5 kN/mm²

Item No. 1

Item weighting iw1=0.86765
X co-ordinate X(1)=0 mm
Y co-ordinate Y(1)=770 mm
X co-ordinate X(2)=300 mm
Y co-ordinate Y(2)=770 mm
X co-ordinate X(3)=300 mm
Y co-ordinate Y(3)=800 mm
X co-ordinate X(4)=400 mm
Y co-ordinate Y(4)=800 mm
X co-ordinate X(5)=400 mm
Y co-ordinate Y(5)=770 mm
X co-ordinate X(6)=920 mm
Y co-ordinate Y(6)=770 mm
X co-ordinate X(7)=920 mm
Y co-ordinate Y(7)=800 mm
X co-ordinate X(8)=1020 mm

Y co-ordinate	Y(8)=800 mm
X co-ordinate	X(9)=1020 mm
Y co-ordinate	Y(9)=750 mm
X co-ordinate	X(10)=1045 mm
Y co-ordinate	Y(10)=750 mm
X co-ordinate	X(11)=1045 mm
Y co-ordinate	Y(11)=500 mm
X co-ordinate	X(12)=1500 mm
Y co-ordinate	Y(12)=700 mm
X co-ordinate	X(13)=1500 mm
Y co-ordinate	Y(13)=1070 mm
X co-ordinate	X(14)=1000 mm
Y co-ordinate	Y(14)=1070 mm
X co-ordinate	X(15)=1000 mm
Y co-ordinate	Y(15)=970 mm
X co-ordinate	X(16)=0 mm
Y co-ordinate	Y(16)=970 mm
X co-ordinate	X(17)=0 mm
Y co-ordinate	Y(17)=770 mm

Second moment of area	IXX2=19.813E9 mm^4
Area of item	A2=374150 mm^2
Centroid from X-X axis	YC2=287.9 mm
Item weighting	iw2=1
Depth of composite section	di=1070 mm
Initial force per strand	if=90 kN
Modulus of elasticity	Es=200 kN/mm^2

Cross-section 1

Distance from mid-span of beam	csd(1)=2.6 m
Number of layers of strand	nls(1)=4
Height above soffit	ds(1)=60 mm
Number of strands	ns(1)=12
Height above soffit	ds(2)=110 mm
Number of strands	ns(2)=14
Height above soffit	ds(3)=600 mm
Number of strands	ns(3)=2
Height above soffit	ds(4)=675 mm
Number of strands	ns(4)=2

Short Term Losses

Relaxation at transfer (%)	str=1.2

Summary

Loss	Loss of Force kN	% Loss
Relaxation Elastic Shortening	32.4 129.06	1.2 4.7799
Transfer Total	161.46	5.9799

Losses at Transfer

Initial force 2700 kN
Force at transfer Pt=P0-loft=2538.5 kN

Loading	Stresses at Transfer N/mm²		
	Top of Beam	Bottom of Beam	Centroid of Strands
Prestress Self weight of Beam	-1.5851 6.8085	11.49 -3.8277	8.8698 -1.696
Total	5.2234	7.6627	7.1738

Beam Concrete Stresses at Transfer

Stress Limitations

Top of beam:
Compressive stress 5.2234 N/mm² is less than allowable stresses of 0.5*fci=22.5 N/mm² and 0.4*fcu=20 N/mm².
Bottom of beam:
Compressive stress 7.6627 N/mm² is less than allowable stresses of 0.5*fci=22.5 N/mm² and 0.4*fcu=20 N/mm².

Long Term Losses

Relaxation after transfer(%) slr(1)=1
Shrinkage per unit length sul(1)=0.3E-3

Summary

Loss	Loss of Force kN	% Loss
Relaxation	32.4	1.2
Elastic Shortening	129.06	4.7799
Transfer Total	161.46	5.9799
Relaxation	27	1
Shrinkage	135	5
Creep	154.95	5.739
Long-term Total	316.95	11.739
All Losses	478.41	17.719

Losses - Long term

Initial force 2700 kN
Final force Pf=P0-loftl=2221.6 kN
Unit-weight of in-situ concrete wc=23.5 kN/m³

Loading	Final Stresses N/mm²		
	Top of Beam	Bottom of Beam	Centroid of Strands
Prestress	-1.3872	10.056	7.7624
Self weight of Beam	6.8085	-3.8277	-1.696
In-situ concrete	7.3332	-4.1227	-1.8267
Total	12.755	2.1053	4.2396

Beam concrete stresses - Long term

Composite section

Height from beam soffit to
bottom of in-situ concrete hsis=500 mm
Perc'age of shrinkage remaining ps=45 %
Percentage pcr=45 %
Percentage stT=60 %
The net moment is Mc=F*e/1E3-Mb=-102.53 kNm
Stress at top of in-situ concrete:
ftisds=-(F/(Ai*mr)-F/(Ai*mr+Ac)-Mc*1E3*(di-Yc)/Ic)*mr*1E3
=0.55782 N/mm²
Stress at bottom of in-situ concrete:
fbisds=-(F/(Ai*mr)-F/(Ai*mr+Ac)-Mc*1E3*(hsis-Yc)/Ic)*mr*1E3
=1.1652 N/mm²
Stress at top of precast concrete beam:

ftpbds=(F/(Ai*mr+Ac)+Mc*1E3*(d-Yc)/Ic+Mb*1E3*Yt/Ixx)*1E3
=-5.6068 N/mm²
Stress at bottom of precast concrete beam:
fbpbds=(F/(Ai*mr+Ac)-Mc*1E3*Yc/Ic-Mb*1E3*Yb/Ixx)*1E3=1.7626 N/mm²

Combination 1 loading

Applied bending moment c1b(1)=500 kNm

Loading	Combination 1 Stresses N/mm²			
	Top of in-situ	Top of Beam	Bottom of in-situ	Bottom of Beam
Prestress,beam and in-situ	0	12.755	0	2.1053
Dif. shrinkage	0.55782	-5.6068	1.1652	1.7626
Combination 1	2.8729	1.5323	-0.35032	-3.3984
Total	3.4307	8.68	0.81488	0.4695

Combination 1 Loading - Stresses

Combination 2 to 5 loading

Applied bending moment c2b(1)=800 kNm

Loading	Final Stresses N/mm²			
	Top of in-situ	Top of Beam	Bottom of in-situ	Bottom of Beam
Prestress,beam and in-situ	0	12.755	0	2.1053
Dif. shrinkage	0.55782	-5.6068	1.1652	1.7626
Combination 2-5	4.1788	2.2288	-0.56052	-5.4374
Total	4.7366	9.3766	0.60469	-1.5695

Combination 2 to 5 Loading - Stresses

Combination 3 loading. The stresses from the Proforma for temperature differences should be added to the total stresses.
Top of in-situ concrete:
Compressive stress 4.7366 N/mm² is less than the maximum allowable stress of 0.5*fcuc=17.5 N/mm².
Top of beam:
Compressive stress 9.3766 N/mm² is less than the maximum allowable stress of 0.4*fcu=20 N/mm².
Bottom of in-situ concrete:
Compressive stress 0.60469 N/mm² is less than the maximum allowable stress of 0.5*fcuc=17.5 N/mm².
Bottom of beam:
Tensile stress 1.5695 N/mm² is less than the maximum allowable tensile stress of 3.182 N/mm².

Location: Ex3 - 14 metre span UM2 beam

Precast prestressed concrete UM beams with in-situ top slab

Calculations for stresses at the Serviceability Limit State (SLS) to BS5400-4:1990 implemented by DOT Departmental Standard BD 44/15.

Span of beam span=14 m

Beam UM 2 section properties

Depth of beam d=720 mm
Cross-sectional area Ac=350150 mm²
Centroid above soffit Yb=256.6 mm
Section modulus top Zt=30.8E6 mm³
Section modulus bottom Zb=56.17E6 mm³
Unit weight of beam uwb=24 kN/m³

Concrete strengths

Strength at transfer fci=35 N/mm²
Characteristic strength fcu=40 N/mm²

Concrete moduli

Modulus of elasticity at transfer for concrete strength 35 N/mm² is:
Eci=29.5 kN/mm²
Modulus of elasticity for concrete strength 40 N/mm² is:
Ecb=31 kN/mm²

Composite section properties

Char strength of in-situ concrete fcuc=30 N/mm²
Modulus of elasticity for concrete strength 30 N/mm² is:
Ecc=28 kN/mm²

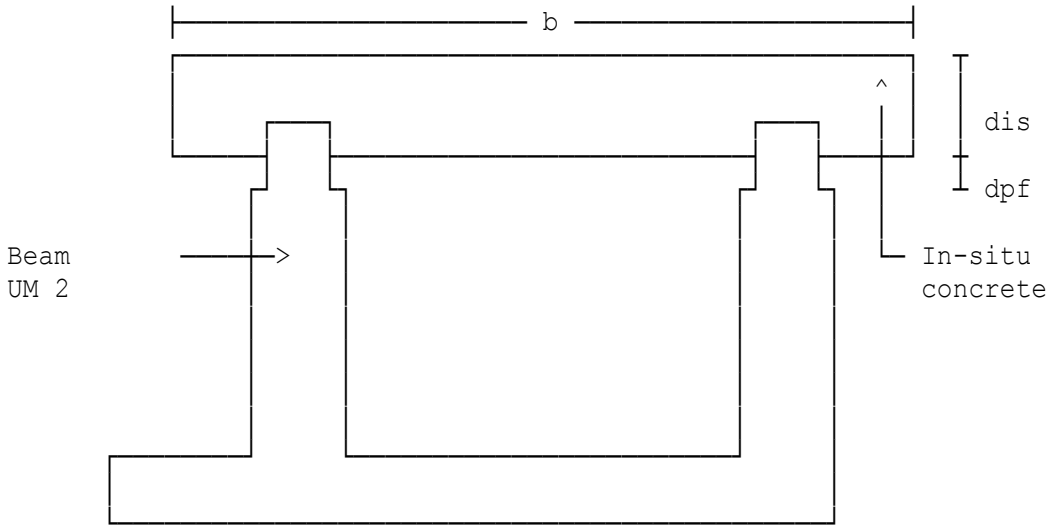

Breadth of slab b=1500 mm

Depth of slab dis=200 mm
Depth of permanent formwork dpf=20 mm

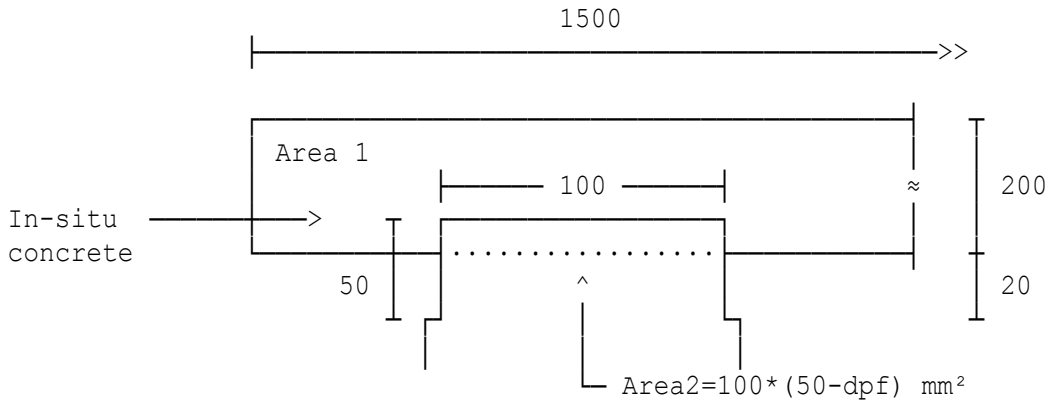

Second moment of area Ic=Ixx+Ac*(Yb-Yc)^2+mr*(Ii+Ai*(Yi -Yc)^2)=61.134E9 mm⁴
Depth of composite section di=890 mm
Nominal diameter nomd=11 mm
Nominal tensile strength nomt=1625 N/mm²
Nominal steel area noma=90 mm²
Characteristic breaking load cbl=140 kN
Initial force per strand if=80 kN
Modulus of elasticity Es=200 kN/mm²

Cross-section 1

Distance from mid-span of beam csd(1)=4.1 m
Number of layers of strand nls(1)=3
Height above soffit ds(1)=55 mm
Number of strands ns(1)=10

WARNING:
Strand location is non-standard.

Height above soffit ds(2)=100 mm
Number of strands ns(2)=12

WARNING:
Strand location is non-standard.

Height above soffit ds(3)=650 mm
Number of strands ns(3)=2

WARNING:
Strand location is too high.

Bending moment from temp.loads tlb(1)=246 kNm
Bending moment from other loads olb(1)=155 kNm

Short Term Losses

Relaxation at transfer (%) str=1

Summary

Loss	Loss of Force kN	% Loss
Relaxation	19.2	1
Elastic Shortening	111.89	5.8277
Transfer Total	131.09	6.8277

Losses at Transfer

Initial force 1920 kN
Force at transfer Pt=P0-loft=1788.9 kN

Loading	Stresses at Transfer N/mm²		
	Top of Beam	Bottom of Beam	Centroid of Strands
Prestress	-2.3402	9.2338	7.191
Self weight of Beam	4.3486	-2.408	-1.2154
Temporary Loads	7.9092	-4.3796	-2.2105
Other Loads	4.9834	-2.7595	-1.3928
Total	14.901	-0.31318	2.3722

Beam Concrete Stresses at Transfer

Stress Limitations

Top of beam:
Compressive stress 14.901 N/mm² is less than allowable stresses of 0.5*fci=17.5 N/mm² and 0.4*fcu=16 N/mm².
Bottom of beam:
The flexural tensile stress of 0.31318 N/mm² at transfer is less than the permissible value of 1 N/mm². Clause 6.3.2.4(b)(1).

Long Term Losses

Relaxation after transfer(%) slr(1)=1
Shrinkage per unit length sul(1)=0.3E-3

Summary

Loss	Loss of Force kN	% Loss
Relaxation Elastic Shortening	19.2 111.89	1 5.8277
Transfer Total	131.09	6.8277
Relaxation Shrinkage Creep	19.2 129.6 108.6	1 6.75 5.6564
Long-term Total	257.4	13.406
All Losses	388.49	20.234

Losses - Long term

Initial force 1920 kN
Final force Pf=P0-loftl=1531.5 kN
Unit-weight of in-situ concrete wc=24 kN/m³

Loading	Final Stresses N/mm²		
	Top of Beam	Bottom of Beam	Centroid of Strands
Prestress Self weight of Beam In-situ concrete	-2.0035 4.3486 3.6513	7.9052 -2.408 -2.0218	6.1563 -1.2154 -1.0205
Total	5.9964	3.4754	3.9204

Beam concrete stresses - Long term

Composite section

Height from beam soffit to
bottom of in-situ concrete hsis=690 mm
Perc'age of shrinkage remaining ps=30 %
Percentage pcr=30 %
Percentage stT=65 %
The net moment is Mc=F*e/1E3-Mb=65.131 kNm
Stress at top of in-situ concrete:
ftisds=-(F/(Ai*mr)-F/(Ai*mr+Ac)-Mc*1E3*(di-Yc)/Ic)*mr*1E3
=0.11008 N/mm²
Stress at bottom of in-situ concrete:
fbisds=-(F/(Ai*mr)-F/(Ai*mr+Ac)-Mc*1E3*(hsis-Yc)/Ic)*mr*1E3
=-0.103 N/mm²
Stress at top of precast concrete beam:

ftpbds=(F/(Ai*mr+Ac)+Mc*1E3*(d-Yc)/Ic+Mb*1E3*Yt/Ixx)*1E3
=-0.064493 N/mm²
Stress at bottom of precast concrete beam:
fbpbds=(F/(Ai*mr+Ac)-Mc*1E3*Yc/Ic-Mb*1E3*Yb/Ixx)*1E3=0.028685 N/mm²

Combination 1 loading

Applied bending moment c1b(1)=410 kNm

Loading	Combination 1 Stresses N/mm²			
	Top of in-situ	Top of Beam	Bottom of in-situ	Bottom of Beam
Prestress,beam and in-situ	0	5.9964	0	3.4754
Dif. shrinkage	0.11008	-0.064493	-0.103	0.028685
Combination 1	2.9664	1.6705	1.4419	-3.3589
Total	3.0764	7.6025	1.3389	0.14514

Combination 1 Loading - Stresses

Combination 2 to 5 loading

Applied bending moment c2b(1)=512 kNm

Loading	Final Stresses N/mm²			
	Top of in-situ	Top of Beam	Bottom of in-situ	Bottom of Beam
Prestress,beam and in-situ	0	5.9964	0	3.4754
Dif. shrinkage	0.11008	-0.064493	-0.103	0.028685
Combination 2-5	3.2592	1.8354	1.5842	-4.1946
Total	3.3693	7.7674	1.4812	-0.69049

Combination 2 to 5 Loading - Stresses

Combination 3 loading. The stresses from the Proforma for temperature differences should be added to the total stresses.
Top of in-situ concrete:
Compressive stress 3.3693 N/mm² is less than the maximum allowable stress of 0.5*fcuc=15 N/mm².
Top of beam:
Compressive stress 7.7674 N/mm² is less than the maximum allowable stress of 0.4*fcu=16 N/mm².
Bottom of in-situ concrete:
Compressive stress 1.4812 N/mm² is less than the maximum allowable stress of 0.5*fcuc=15 N/mm².
Bottom of beam:
Tensile stress 0.69049 N/mm² is less than the maximum allowable tensile stress of 2.846 N/mm².

Location: Ex1 - 20 metre span UM beam

Precast prestressed concrete UM beams with in-situ top slab

Calculations for stresses at the Serviceability Limit State (SLS) in accordance with BS EN 1992-2:2005 and NA to BS EN 1992-2:2005.

Beam span under consideration span=20 m

Beam UM 6 section properties

Depth of beam	d=1040 mm
Cross-sectional area	Ac=446150 mm²
Centroid above soffit	Yb=387.7 mm
Section modulus top	Zt=65.86E6 mm³
Section modulus bottom	Zb=111.63E6 mm³
Unit weight of beam	uwb=25 kN/m³

Concrete compressive strengths

Characteristic cylinder strength	fcki=32 N/mm² (transfer)
Characteristic cylinder strength	fck=40 N/mm²

Concrete moduli (short-term)

Concrete modulus of elasticity	Ecmi=33 kN/mm² (transfer)
Concrete modulus of elasticity	Ecmb=35 kN/mm²

Composite section properties

Char strength (in-situ concrete)	fckc=32 N/mm²
Short-term modulus of elasticity for in-situ concrete	Ecmc=33 kN/mm²

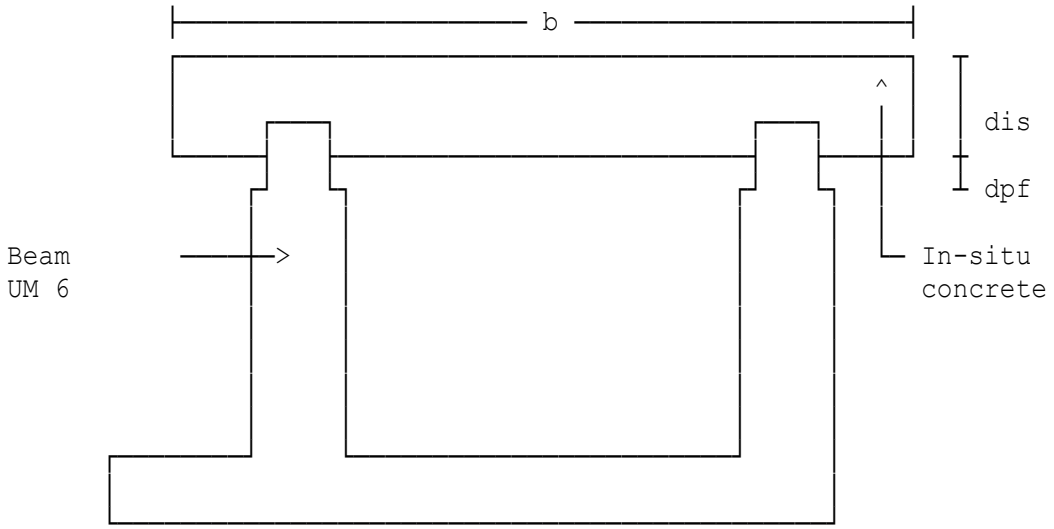

Breadth of slab	b=1500 mm
Depth of slab	dis=160 mm
Depth of permanent formwork	dpf=15 mm

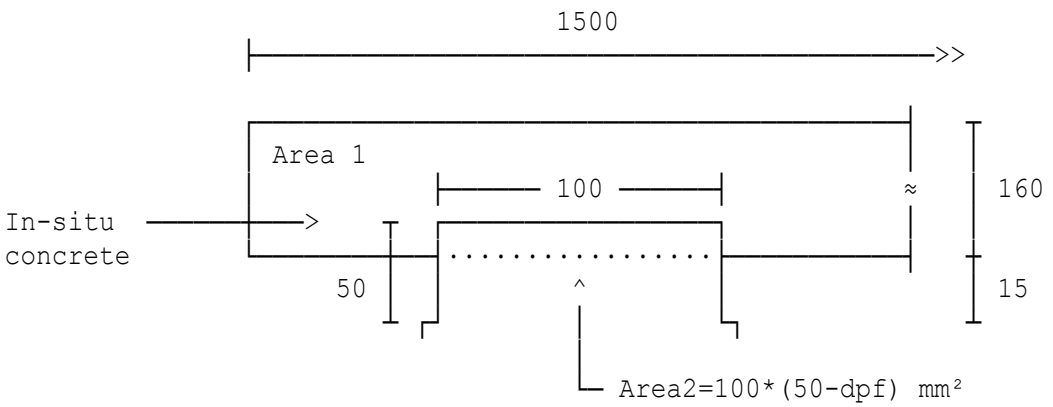

Second moment of area Ic=Iyy+Ac*(Yb-Yc)^2+mr*(Ii+Ai*(Yi -Yc)^2)=118.59E9 mm⁴
Depth of composite section di=1165 mm
Modulus of elasticity (strand) Ep=195 kN/mm²

Cross-section 1

Distance from mid-span of beam csd(1)=0 m
Number of layers of strand nls(1)=4
Height above soffit ds(1)=60 mm
Number of strands ns(1)=14
Height above soffit ds(2)=110 mm
Number of strands ns(2)=12
Height above soffit ds(3)=700 mm
Number of strands ns(3)=2
Height above soffit ds(4)=940 mm
Number of strands ns(4)=2

Short Term Losses (BS EN 1992-1-1)

Relaxation at transfer (%) str=1

Summary

Loss	Loss of Force kN	% Loss
Relaxation	52.2	1
Elastic Shortening	380.48	7.2889
Transfer Total	432.68	8.2889

Losses at Transfer

Initial force 5220 kN
Force at transfer Pt=P0-loft=4787.3 kN

Loading	Stresses at Transfer N/mm²		
	Top of Beam	Bottom of Beam	Centroid of Strands
Prestress Self weight of Beam	-4.16 8.4055	19.58 -4.9959	15.441 -2.6592
Total	4.2455	14.585	12.782

Beam Concrete Stresses at Transfer

Stress Limitations (BS EN 1992-1-1, Clause 5.10.2.2)

Top of beam:
Compressive stress 4.2455 N/mm² is less than allowable stresses of 0.7*fcki=22.4 N/mm² and 0.6*fck=24 N/mm².
Bottom of beam:
Compressive stress 14.585 N/mm² is less than allowable stresses of 0.7*fcki=22.4 N/mm² and 0.6*fck=24 N/mm².

Long Term Losses (BS EN 1992-1-1, Clause 5.10.6(1))

Relaxation after transfer(%) slr(1)=2
Shrinkage per unit length sul(1)=0.3E-3
Creep coefficient φ(∞,to) crf=2

Summary

Loss	Loss of Force kN	% Loss
Relaxation Elastic Shortening	52.2 380.48	1 7.2889
Transfer Total	432.68	8.2889
Relaxation Shrinkage Creep	104.4 243.95 599.08	2 4.6733 11.477
Long-term Total	947.42	18.15
All Losses	1380.1	26.439

Losses - Long term

Initial force 5220 kN
Final force Pf=P0-loftl=3839.9 kN
Unit-weight of in-situ concrete wc=24 kN/m³

Loading	Final Stresses N/mm²		
	Top of Beam	Bottom of Beam	Centroid of Strands
Prestress	-3.3367	15.705	12.385
Self weight of Beam	8.4055	-4.9959	-2.6592
In-situ concrete	4.2141	-2.5047	-1.3332
Total	9.2829	8.2049	8.3928

Beam concrete stresses - Long term

Composite section

Height from beam soffit to
bottom of in-situ concrete hsis=1005 mm
Perc'age of shrinkage remaining ps=25 %
Percentage pcr=25 %
Percentage stT=67 %
The net moment is Mc=F*e/1E3-Mb=-76.365 kNm
Stress at top of in-situ concrete:
ftisds=-(F/(Ai*mr)-F/(Ai*mr+Ac)-Mc*1E3*(di-Yc)/Ic)*mr*1E3
=0.069729 N/mm²
Stress at bottom of in-situ concrete:
fbisds=-(F/(Ai*mr)-F/(Ai*mr+Ac)-Mc*1E3*(hsis-Yc)/Ic)*mr*1E3
=0.17276 N/mm²
Stress at top of precast concrete beam:
ftpbds=(F/(Ai*mr+Ac)+Mc*1E3*(d-Yc)/Ic+Mb*1E3*Yt/Iyy)*1E3
=-0.35273 N/mm²
Stress at bottom of precast concrete beam:
fbpbds=(F/(Ai*mr+Ac)-Mc*1E3*Yc/Ic-Mb*1E3*Yb/Iyy)*1E3=0.1097 N/mm²

Loading Combination 1

(no tensile stress permitted in precast beam)
Characteristic bending moment c1b(1)=1450 kNm

Loading	Loading Combination 1 Stresses N/mm²			
	Top of in-situ	Top of Beam	Bottom of in-situ	Bottom of Beam
Prestress,beam and in-situ	0	9.2829	0	8.2049
Dif. shrinkage	0.069729	-0.35273	0.17276	0.1097
Combination 1	9.0639	6.9557	6.3654	-7.6735
Total	9.1336	15.886	6.5382	0.64105

Loading Combination 1 - Stresses

Loading Combination 2

(tensile stress permitted (no visible cracking))
Characteristic bending moment c2b(1)=2100 kNm

Loading	Loading Combination 2 Stresses N/mm²			
	Top of in-situ	Top of Beam	Bottom of in-situ	Bottom of Beam
Prestress,beam and in-situ	0	9.2829	0	8.2049
Dif. shrinkage	0.069729	-0.35273	0.17276	0.1097
Combination 2	9.5171	7.3035	6.6837	-11.113
Total	9.5868	16.234	6.8565	-2.7988

Loading Combination 2 - Stresses

NOTE: The stresses from temperature differences should be added to the total stresses.

Top of in-situ concrete:
Compressive stress 9.5868 N/mm² is less than the maximum allowable stress of 0.6*fckc=19.2 N/mm².
Top of beam:
Compressive stress 16.234 N/mm² is less than the maximum allowable stress of 0.6*fck=24 N/mm².
Bottom of in-situ concrete:
Compressive stress 6.8565 N/mm² is less than the maximum allowable stress of 0.6*fckc=19.2 N/mm².
Bottom of beam:
Tensile stress 2.7988 N/mm² is less than the maximum allowable tensile stress of 3.0263 N/mm².

Copyright 1986-2024 Fitzroy Systems Ltd.

Location: Ex2 - 16 metre span UM3 beam

Precast prestressed concrete UM beams with in-situ top slab

Calculations for stresses at the Serviceability Limit State (SLS) in accordance with BS EN 1992-2:2005 and NA to BS EN 1992-2:2005.

Beam span under consideration span=16 m

Beam UM 3 section properties

Depth of beam	d=800 mm
Cross-sectional area	Ac=374150 mm²
Centroid above soffit	Yb=287.9 mm
Section modulus top	Zt=38.36E6 mm³
Section modulus bottom	Zb=68.82E6 mm³
Unit weight of beam	uwb=24.6 kN/m³

Concrete compressive strengths

Characteristic cylinder strength	fcki=35 N/mm² (transfer)
Characteristic cylinder strength	fck=40 N/mm²

Concrete moduli (short-term)

Concrete modulus of elasticity	Ecmi=34 kN/mm² (transfer)
Concrete modulus of elasticity	Ecmb=35 kN/mm²

Composite section properties

Char strength (in-situ concrete)	fckc=28 N/mm²
Short-term modulus of elasticity for in-situ concrete	Ecmc=32 kN/mm²

Item No. 1

Item weighting	iw1=0.91429
X co-ordinate	X(1)=0 mm
Y co-ordinate	Y(1)=770 mm
X co-ordinate	X(2)=300 mm
Y co-ordinate	Y(2)=770 mm
X co-ordinate	X(3)=300 mm
Y co-ordinate	Y(3)=800 mm
X co-ordinate	X(4)=400 mm
Y co-ordinate	Y(4)=800 mm
X co-ordinate	X(5)=400 mm
Y co-ordinate	Y(5)=770 mm
X co-ordinate	X(6)=920 mm
Y co-ordinate	Y(6)=770 mm
X co-ordinate	X(7)=920 mm
Y co-ordinate	Y(7)=800 mm
X co-ordinate	X(8)=1020 mm
Y co-ordinate	Y(8)=800 mm
X co-ordinate	X(9)=1020 mm

Y co-ordinate	Y(9)=750 mm
X co-ordinate	X(10)=1045 mm
Y co-ordinate	Y(10)=750 mm
X co-ordinate	X(11)=1045 mm
Y co-ordinate	Y(11)=500 mm
X co-ordinate	X(12)=1500 mm
Y co-ordinate	Y(12)=700 mm
X co-ordinate	X(13)=1500 mm
Y co-ordinate	Y(13)=1070 mm
X co-ordinate	X(14)=1000 mm
Y co-ordinate	Y(14)=1070 mm
X co-ordinate	X(15)=1000 mm
Y co-ordinate	Y(15)=970 mm
X co-ordinate	X(16)=0 mm
Y co-ordinate	Y(16)=970 mm
X co-ordinate	X(17)=0 mm
Y co-ordinate	Y(17)=770 mm

Second moment of area	IXX2=19.813E9 mm^4
Area of item	A2=374150 mm^2
Centroid from X-X axis	YC2=287.9 mm
Item weighting	iw2=1
Depth of composite section	di=1070 mm
Modulus of elasticity (strand)	Ep=195 kN/mm^2

Cross-section 1

Distance from mid-span of beam	csd(1)=2.6 m
Number of layers of strand	nls(1)=4
Height above soffit	ds(1)=60 mm
Number of strands	ns(1)=12
Height above soffit	ds(2)=110 mm
Number of strands	ns(2)=14
Height above soffit	ds(3)=600 mm
Number of strands	ns(3)=2
Height above soffit	ds(4)=675 mm
Number of strands	ns(4)=2

Short Term Losses (BS EN 1992-1-1)

Relaxation at transfer (%)	str=1.2

Summary

Loss	Loss of Force kN	% Loss
Relaxation	32.4	1.2
Elastic Shortening	115.09	4.2626
Transfer Total	147.49	5.4626

Losses at Transfer

Initial force	2700 kN

Force at transfer Pt=P0-loft=2552.5 kN

Loading	Stresses at Transfer N/mm²		
	Top of Beam	Bottom of Beam	Centroid of Strands
Prestress Self weight of Beam	-1.5938 6.8085	11.554 -3.8277	8.9186 -1.696
Total	5.2147	7.7259	7.2226

Beam Concrete Stresses at Transfer

Stress Limitations (BS EN 1992-1-1, Clause 5.10.2.2)

Top of beam:
Compressive stress 5.2147 N/mm² is less than allowable stresses of 0.7*fcki=24.5 N/mm² and 0.6*fck=24 N/mm².
Bottom of beam:
Compressive stress 7.7259 N/mm² is less than allowable stresses of 0.7*fcki=24.5 N/mm² and 0.6*fck=24 N/mm².

Long Term Losses (BS EN 1992-1-1, Clause 5.10.6(1))

Relaxation after transfer(%) slr(1)=1
Shrinkage per unit length sul(1)=0.3E-3
Creep coefficient φ(∞,to) crf=2

Summary

Loss	Loss of Force kN	% Loss
Relaxation Elastic Shortening	32.4 115.09	1.2 4.2626
Transfer Total	147.49	5.4626
Relaxation Shrinkage Creep	27 131.63 181.08	1 4.875 6.7067
Long-term Total	339.71	12.582
All Losses	487.2	18.044

Losses - Long term

Initial force 2700 kN
Final force Pf=P0-loftl=2212.8 kN
Unit-weight of in-situ concrete wc=23.5 kN/m³

Loading	Final Stresses N/mm²		
	Top of Beam	Bottom of Beam	Centroid of Strands
Prestress	-1.3817	10.016	7.7317
Self weight of Beam	6.8085	-3.8277	-1.696
In-situ concrete	7.3332	-4.1227	-1.8267
Total	12.76	2.0656	4.2089

Beam concrete stresses - Long term

Composite section

Height from beam soffit to
bottom of in-situ concrete hsis=500 mm
Perc'age of shrinkage remaining ps=45 %
Percentage pcr=45 %
Percentage stT=60 %
The net moment is Mc=F*e/1E3-Mb=-184.96 kNm
Stress at top of in-situ concrete:
ftisds=-(F/(Ai*mr)-F/(Ai*mr+Ac)-Mc*1E3*(di-Yc)/Ic)*mr*1E3
=0.60673 N/mm²
Stress at bottom of in-situ concrete:
fbisds=-(F/(Ai*mr)-F/(Ai*mr+Ac)-Mc*1E3*(hsis-Yc)/Ic)*mr*1E3
=1.7369 N/mm²
Stress at top of precast concrete beam:
ftpbds=(F/(Ai*mr+Ac)+Mc*1E3*(d-Yc)/Ic+Mb*1E3*Yt/Iyy)*1E3
=-7.2888 N/mm²
Stress at bottom of precast concrete beam:
fbpbds=(F/(Ai*mr+Ac)-Mc*1E3*Yc/Ic-Mb*1E3*Yb/Iyy)*1E3=2.2717 N/mm²

Loading Combination 1

(no tensile stress permitted in precast beam)
Characteristic bending moment c1b(1)=500 kNm

Loading	Loading Combination 1 Stresses N/mm²			
	Top of in-situ	Top of Beam	Bottom of in-situ	Bottom of Beam
Prestress,beam and in-situ	0	12.76	0	2.0656
Dif. shrinkage	0.60673	-7.2888	1.7369	2.2717
Combination 1	2.9195	1.4521	-0.40097	-3.3697
Total	3.5262	6.9233	1.3359	0.96765

Loading Combination 1 - Stresses

Loading Combination 2

(tensile stress permitted (no visible cracking))
Characteristic bending moment c2b(1)=800 kNm

Loading	Loading Combination 2 Stresses N/mm²			
	Top of in-situ	Top of Beam	Bottom of in-situ	Bottom of Beam
Prestress,beam and in-situ	0	12.76	0	2.0656
Dif. shrinkage	0.60673	-7.2888	1.7369	2.2717
Combination 2	4.2465	2.1121	-0.64156	-5.3915
Total	4.8532	7.5833	1.0953	-1.0541

Loading Combination 2 - Stresses

NOTE: The stresses from temperature differences should be added to the total stresses.

Top of in-situ concrete:
Compressive stress 4.8532 N/mm² is less than the maximum allowable stress of 0.6*fckc=16.8 N/mm².
Top of beam:
Compressive stress 7.5833 N/mm² is less than the maximum allowable stress of 0.6*fck=24 N/mm².
Bottom of in-situ concrete:
Compressive stress 1.0953 N/mm² is less than the maximum allowable stress of 0.6*fckc=16.8 N/mm².
Bottom of beam:
Tensile stress 1.0541 N/mm² is less than the maximum allowable tensile stress of 3.0263 N/mm².

Copyright 1986-2024 Fitzroy Systems Ltd.

Location: Ex3 - 14 metre span UM2 beam

Precast prestressed concrete UM beams with in-situ top slab

Calculations for stresses at the Serviceability Limit State (SLS) in accordance with BS EN 1992-2:2005 and NA to BS EN 1992-2:2005.

Beam span under consideration span=14 m

Beam UM 2 section properties

Depth of beam	d=720 mm
Cross-sectional area	Ac=350150 mm²
Centroid above soffit	Yb=256.6 mm
Section modulus top	Zt=30.8E6 mm³
Section modulus bottom	Zb=56.17E6 mm³
Unit weight of beam	uwb=24 kN/m³

Concrete compressive strengths

Characteristic cylinder strength	fcki=28 N/mm² (transfer)
Characteristic cylinder strength	fck=32 N/mm²

Concrete moduli (short-term)

Concrete modulus of elasticity	Ecmi=32 kN/mm² (transfer)
Concrete modulus of elasticity	Ecmb=33 kN/mm²

Composite section properties

Char strength (in-situ concrete)	fckc=25 N/mm²
Short-term modulus of elasticity for in-situ concrete	Ecmc=31 kN/mm²

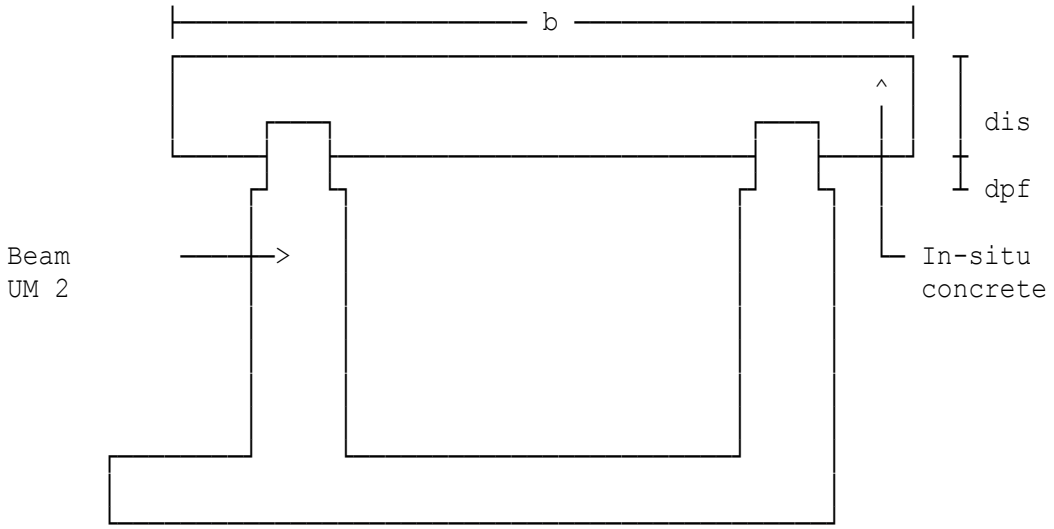

Breadth of slab	b=1500 mm
Depth of slab	dis=200 mm
Depth of permanent formwork	dpf=20 mm

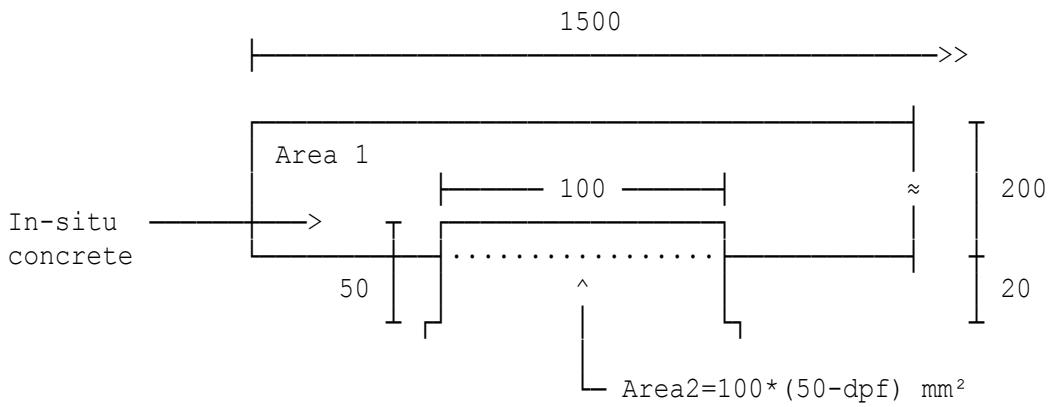

Second moment of area	Ic=Iyy+Ac*(Yb-Yc)^2+mr*(Ii+Ai*(Yi -Yc)^2)=61.134E9 mm⁴
Depth of composite section	di=890 mm
Nominal diameter	nomd=11 mm
Nominal tensile strength	nomt=1625 N/mm²
Nominal steel area	noma=90 mm²
Characteristic breaking load	fpk=140 kN
Initial force per strand	ipf=80 kN
Modulus of elasticity (strand)	Ep=195 kN/mm²

Cross-section 1

Distance from mid-span of beam	csd(1)=4.1 m
Number of layers of strand	nls(1)=3
Height above soffit	ds(1)=55 mm
Number of strands	ns(1)=10

WARNING:
Strand location is non-standard.

Height above soffit	ds(2)=100 mm
Number of strands	ns(2)=12

WARNING:
Strand location is non-standard.

Height above soffit	ds(3)=650 mm
Number of strands	ns(3)=2

WARNING:
Strand location is too high.

Bending moment from temp.loads	tlb(1)=246 kNm
Bending moment from other loads	olb(1)=155 kNm

Short Term Losses (BS EN 1992-1-1)

Relaxation at transfer (%)	str=1

Summary

Loss	Loss of Force kN	% Loss
Relaxation	19.2	1
Elastic Shortening	95.517	4.9749
Transfer Total	114.72	5.9749

Losses at Transfer

Initial force 1920 kN
Force at transfer Pt=P0-loft=1805.3 kN

Loading	Stresses at Transfer N/mm²		
	Top of Beam	Bottom of Beam	Centroid of Strands
Prestress	-2.3616	9.3184	7.2568
Self weight of Beam	4.3486	-2.408	-1.2154
Temporary Loads	7.9092	-4.3796	-2.2105
Other Loads	4.9834	-2.7595	-1.3928
Total	14.88	-0.22866	2.438

Beam Concrete Stresses at Transfer

Stress Limitations (BS EN 1992-1-1, Clause 5.10.2.2)

Top of beam:
Compressive stress 14.88 N/mm² is less than allowable stresses of 0.7*fcki=19.6 N/mm² and 0.6*fck=19.2 N/mm².
Bottom of beam:
The flexural tensile stress of 0.22866 N/mm² at transfer is less than the permissible value of 1 N/mm² (as was permitted in BS5400-4).

Long Term Losses (BS EN 1992-1-1, Clause 5.10.6(1))

Relaxation after transfer(%) slr(1)=1
Shrinkage per unit length sul(1)=0.3E-3
Creep coefficient φ(∞,to) crf=2.5

Summary

Loss	Loss of Force kN	% Loss
Relaxation Elastic Shortening	19.2 95.517	1 4.9749
Transfer Total	114.72	5.9749
Relaxation Shrinkage Creep	19.2 126.36 148.33	1 6.5813 7.7256
Long-term Total	293.89	15.307
All Losses	408.61	21.282

Losses - Long term

Initial force 1920 kN
Final force Pf=P0-loftl=1511.4 kN
Unit-weight of in-situ concrete wc=24 kN/m³

Loading	Final Stresses N/mm²		
	Top of Beam	Bottom of Beam	Centroid of Strands
Prestress Self weight of Beam In-situ concrete	-1.9772 4.3486 3.6513	7.8014 -2.408 -2.0218	6.0754 -1.2154 -1.0205
Total	6.0227	3.3716	3.8395

Beam concrete stresses - Long term

Composite section

Height from beam soffit to
bottom of in-situ concrete hsis=690 mm
Perc'age of shrinkage remaining ps=30 %
Percentage pcr=30 %
Percentage stT=65 %
The net moment is Mc=F*e/1E3-Mb=8.7193 kNm
Stress at top of in-situ concrete:
ftisds=-(F/(Ai*mr)-F/(Ai*mr+Ac)-Mc*1E3*(di-Yc)/Ic)*mr*1E3
=0.16494 N/mm²
Stress at bottom of in-situ concrete:
fbisds=-(F/(Ai*mr)-F/(Ai*mr+Ac)-Mc*1E3*(hsis-Yc)/Ic)*mr*1E3
=0.13641 N/mm²
Stress at top of precast concrete beam:

ftpbds=(F/(Ai*mr+Ac)+Mc*1E3*(d-Yc)/Ic+Mb*1E3*Yt/Iyy)*1E3
=-0.89452 N/mm²
Stress at bottom of precast concrete beam:
fbpbds=(F/(Ai*mr+Ac)-Mc*1E3*Yc/Ic-Mb*1E3*Yb/Iyy)*1E3
=0.29843 N/mm²

Loading Combination 1

(no tensile stress permitted in precast beam)
Characteristic bending moment c1b(1)=410 kNm

Loading	Loading Combination 1 Stresses N/mm²			
	Top of in-situ	Top of Beam	Bottom of in-situ	Bottom of Beam
Prestress,beam and in-situ	0	6.0227	0	3.3716
Dif. shrinkage	0.16494	-0.89452	0.13641	0.29843
Combination 1	2.9664	1.6705	1.4419	-3.3589
Total	3.1313	6.7987	1.5783	0.31107

Loading Combination 1 - Stresses

Loading Combination 2

(tensile stress permitted (no visible cracking))
Characteristic bending moment c2b(1)=512 kNm

Loading	Loading Combination 2 Stresses N/mm²			
	Top of in-situ	Top of Beam	Bottom of in-situ	Bottom of Beam
Prestress,beam and in-situ	0	6.0227	0	3.3716
Dif. shrinkage	0.16494	-0.89452	0.13641	0.29843
Combination 2	3.2592	1.8354	1.5842	-4.1946
Total	3.4241	6.9636	1.7206	-0.52457

Loading Combination 2 - Stresses

NOTE: The stresses from temperature differences should be added to the total stresses.

Top of in-situ concrete:
Compressive stress 3.4241 N/mm² is less than the maximum allowable stress of 0.6*fckc=15 N/mm².
Top of beam:
Compressive stress 6.9636 N/mm² is less than the maximum allowable stress of 0.6*fck=19.2 N/mm².

Bottom of in-situ concrete:
Compressive stress 1.7206 N/mm² is less than the maximum allowable stress of 0.6*fckc=15 N/mm².
Bottom of beam:
Tensile stress 0.52457 N/mm² is less than the maximum allowable tensile stress of 2.8534 N/mm².

Location: Ex1 - 20 metre span Y beam

Precast prestressed concrete Y beams with in-situ top slab

Calculations for stresses at the Serviceability Limit State (SLS) to BS5400-4:1990 implemented by DOT Departmental Standard BD 44/15.

Span of beam span=20 m

Beam Y 4 section properties

Depth of beam	d=1000 mm
Cross-sectional area	Ac=410880 mm²
Centroid above soffit	Yb=399.3 mm
Section modulus top	Zt=63.63E6 mm³
Section modulus bottom	Zb=95.72E6 mm³
Unit weight of beam	uwb=24 kN/m³

Concrete strengths

Strength at transfer	fci=40 N/mm²
Characteristic strength	fcu=50 N/mm²

Concrete moduli

Modulus of elasticity at transfer for concrete strength 40 N/mm² is:
Eci=31 kN/mm²
Modulus of elasticity for concrete strength 50 N/mm² is:
Ecb=34 kN/mm²

Composite section properties

Char strength of in-situ concrete fcuc=40 N/mm²
Modulus of elasticity for concrete strength 40 N/mm² is:
Ecc=31 kN/mm²

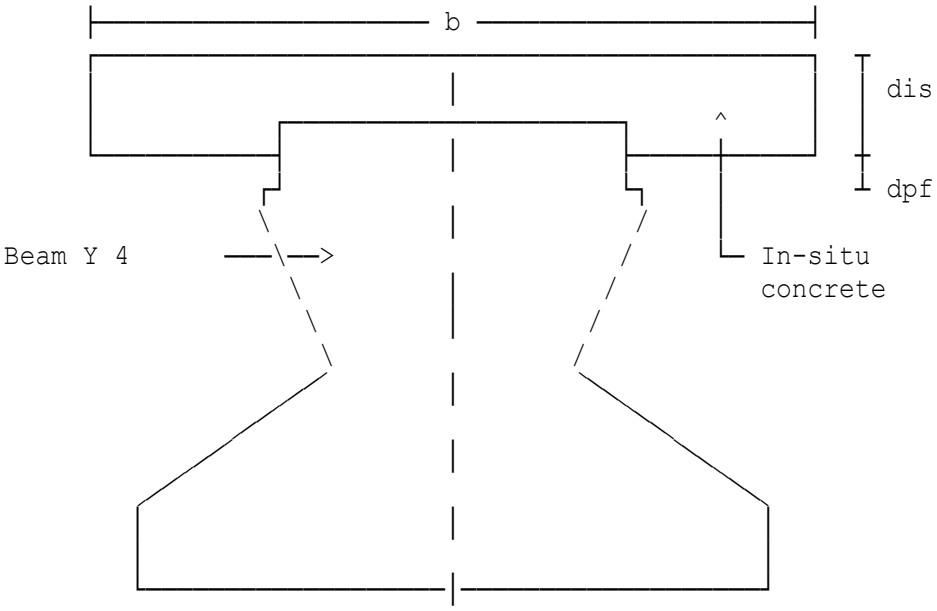

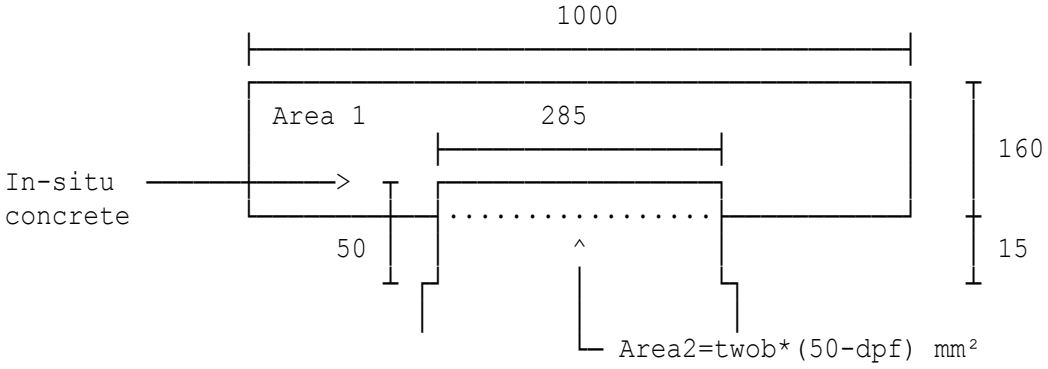

Second moment of area:

Depth of composite section	di=1125 mm
Initial force	if=174 kN
Modulus of elasticity	Es=200 kN/mm²

Cross-section 1

Distance from mid-span of beam	csd(1)=0 m
Number of layers of strand	nls(1)=4
Height above soffit	ds(1)=60 mm
Number of strands	ns(1)=11
Height above soffit	ds(2)=110 mm
Number of strands	ns(2)=14
Height above soffit	ds(3)=800 mm
Number of strands	ns(3)=2
Height above soffit	ds(4)=900 mm
Number of strands	ns(4)=2

Short Term Losses

Relaxation at transfer (%)	str=1

Summary

Loss	Loss of Force kN	% Loss
Relaxation Elastic Shortening	50.46 460.71	1 9.1302
Transfer Total	511.17	10.13

Losses at Transfer

Initial force 5046 kN
Force at transfer Pt=P0-loft=4534.8 kN

Loading	Stresses at Transfer N/mm²		
	Top of Beam	Bottom of Beam	Centroid of Strands
Prestress Self weight of Beam	-3.6591 7.7491	20.806 -5.151	16.081 -2.66
Total	4.09	15.655	13.421

Beam Concrete Stresses at Transfer

Stress Limitations

Top of beam:
Compressive stress 4.09 N/mm² is less than allowable stresses of 0.5*fci=20 N/mm² and 0.4*fcu=20 N/mm².
Bottom of beam:
Compressive stress 15.655 N/mm² is less than allowable stresses of 0.5*fci=20 N/mm² and 0.4*fcu=20 N/mm².

Long Term Losses

Relaxation after transfer(%) slr(1)=2
Shrinkage per unit length sul(1)=0.3E-3

Summary

Loss	Loss of Force kN	% Loss
Relaxation Elastic Shortening	50.46 460.71	1 9.1302
Transfer Total	511.17	10.13
Relaxation Shrinkage Creep	100.92 241.86 564.59	2 4.7931 11.189
Long-term Total	907.37	17.982
All Losses	1418.5	28.112

Losses - Long term

Initial force 5046 kN
Final force Pf=P0-loftl=3627.5 kN
Unit-weight of in-situ concrete wc=24 kN/m³

Loading	Final Stresses N/mm²		
	Top of Beam	Bottom of Beam	Centroid of Strands
Prestress Self weight of Beam In-situ concrete	-2.9269 7.7491 2.8294	16.643 -5.151 -1.8808	12.864 -2.66 -0.97123
Total	7.6516	9.6108	9.2325

Beam concrete stresses - Long term

Composite section

Height from beam soffit to
bottom of in-situ concrete hsis=965 mm
Perc'age of shrinkage remaining ps=25 %
Percentage pcr=25 %
Percentage stT=67 %
The net moment is Mc=F*e/1E3-Mb=-69.607 kNm
Stress at top of in-situ concrete:
ftisds=-(F/(Ai*mr)-F/(Ai*mr+Ac)-Mc*1E3*(di-Yc)/Ic)*mr*1E3
=-0.27908 N/mm²
Stress at bottom of in-situ concrete:
fbisds=-(F/(Ai*mr)-F/(Ai*mr+Ac)-Mc*1E3*(hsis-Yc)/Ic)*mr*1E3
=-0.14795 N/mm²
Stress at top of precast concrete beam:

ftpbds=(F/(Ai*mr+Ac)+Mc*1E3*(d-Yc)/Ic+Mb*1E3*Yt/Ixx)*1E3
=0.41544 N/mm²
Stress at bottom of precast concrete beam:
fbpbds=(F/(Ai*mr+Ac)-Mc*1E3*Yc/Ic-Mb*1E3*Yb/Ixx)*1E3=-0.1443 N/mm²

Combination 1 loading

Applied bending moment c1b(1)=1400 kNm

Loading	Combination 1 Stresses N/mm²			
	Top of in-situ	Top of Beam	Bottom of in-situ	Bottom of Beam
Prestress,beam and in-situ	0	7.6516	0	9.6108
Dif. shrinkage	-0.27908	0.41544	-0.14795	-0.1443
Combination 1	11.696	9.0472	8.3055	-9.4472
Total	11.417	17.114	8.1575	0.019309

Combination 1 Loading - Stresses

Combination 2 to 5 loading

Applied bending moment c2b(1)=1850 kNm

Loading	Combination 2 to 5 Stresses N/mm²			
	Top of in-situ	Top of Beam	Bottom of in-situ	Bottom of Beam
Prestress,beam and in-situ	0	7.6516	0	9.6108
Dif. shrinkage	-0.27908	0.41544	-0.14795	-0.1443
Combination 2-5	12.021	9.2985	8.5362	-12.484
Total	11.742	17.366	8.3882	-3.0173

Combination 2 to 5 Loading - Stresses

Combination 3 loading. The stresses from the Proforma for temperature differences should be added to the total stresses.

Top of in-situ concrete:
Compressive stress 11.742 N/mm² is less than the maximum allowable stress of 0.5*fcuc=20 N/mm².
Top of beam:
Compressive stress 17.366 N/mm² is less than the maximum allowable stress of 0.4*fcu=20 N/mm².
Bottom of in-situ concrete:
Compressive stress 8.3882 N/mm² is less than the maximum allowable stress of 0.5*fcuc=20 N/mm².

Bottom of beam:
Tensile stress 3.0173 N/mm² is less than the maximum allowable tensile stress of 3.182 N/mm².

Location: Ex2 - 29.5 metre span Y8 beam

Precast prestressed concrete Y beams with in-situ top slab

Calculations for stresses at the Serviceability Limit State (SLS) to BS5400-4:1990 implemented by DOT Departmental Standard BD 44/15.

Span of beam span=29.5 m

Beam Y 8 section properties

Depth of beam d=1400 mm
Cross-sectional area Ac=585580 mm²
Centroid above soffit Yb=637.8 mm
Section modulus top Zt=156.12E6 mm³
Section modulus bottom Zb=186.56E6 mm³
Unit weight of beam uwb=24.5 kN/m³

Concrete strengths

Strength at transfer fci=40 N/mm²
Characteristic strength fcu=52.5 N/mm²

Concrete moduli

Modulus of elasticity at transfer for concrete strength 40 N/mm² is:
Eci=31 kN/mm²
Modulus of elasticity for concrete strength 52.5 N/mm² is:
Ecb=34.5 kN/mm²

Composite section properties

Char strength of in-situ concrete fcuc=40 N/mm²
Modulus of elasticity for concrete strength 40 N/mm² is:
Ecc=31 kN/mm²

Item No. 1

Item weighting iw1=0.89855
X co-ordinate X(1)=100 mm
Y co-ordinate Y(1)=0 mm
X co-ordinate X(2)=850 mm
Y co-ordinate Y(2)=0 mm
X co-ordinate X(3)=850 mm
Y co-ordinate Y(3)=202 mm
X co-ordinate X(4)=1100 mm
Y co-ordinate Y(4)=1300 mm
X co-ordinate X(5)=1350 mm
Y co-ordinate Y(5)=1300 mm
X co-ordinate X(6)=1350 mm
Y co-ordinate Y(6)=1700 mm
X co-ordinate X(7)=850 mm
Y co-ordinate Y(7)=1700 mm
X co-ordinate X(8)=850 mm

Y co-ordinate	Y(8)=1600 mm
X co-ordinate	X(9)=0 mm
Y co-ordinate	Y(9)=1600 mm
X co-ordinate	X(10)=0 mm
Y co-ordinate	Y(10)=1375 mm
X co-ordinate	X(11)=275 mm
Y co-ordinate	Y(11)=1375 mm
X co-ordinate	X(12)=275 mm
Y co-ordinate	Y(12)=1350 mm
X co-ordinate	X(13)=235 mm
Y co-ordinate	Y(13)=1350 mm
X co-ordinate	X(14)=375 mm
Y co-ordinate	Y(14)=379 mm
X co-ordinate	X(15)=100 mm
Y co-ordinate	Y(15)=202 mm
X co-ordinate	X(16)=100 mm
Y co-ordinate	Y(16)=0 mm

Item No. 2

Second moment of area	IXX2=118.99E9 mm^4
Area of item	A2=585580 mm^2
Centroid from X-X axis	YC2=637.8 mm
Item weighting	iw2=0.10145
Depth of composite section	di=1700 mm
Initial force	if=200 kN
Modulus of elasticity	Es=200 kN/mm^2

Cross-section 1

Distance from mid-span of beam	csd(1)=9.75 m
Number of layers of strand	nls(1)=4
Height above soffit	ds(1)=60 mm
Number of strands	ns(1)=10
Height above soffit	ds(2)=110 mm
Number of strands	ns(2)=12
Height above soffit	ds(3)=210 mm
Number of strands	ns(3)=8
Height above soffit	ds(4)=1200 mm
Number of strands	ns(4)=2

Short Term Losses

Relaxation at transfer (%)	str=1.5

Summary

Loss	Loss of Force kN	% Loss
Relaxation Elastic Shortening	96 732.67	1.5 11.448
Transfer Total	828.67	12.948

Losses at Transfer

Initial force 6400 kN
Force at transfer Pt=P0-loft=5571.3 kN

Loading	Stresses at Transfer N/mm²		
	Top of Beam	Bottom of Beam	Centroid of Strands
Prestress Self weight of Beam	-6.5562 5.6289	22.962 -4.7102	19.008 -3.3255
Total	-0.92729	18.252	15.683

Beam Concrete Stresses at Transfer

Stress Limitations

Top of beam:
The flexural tensile stress of 0.92729 N/mm² at transfer is less than the permissible value of 1 N/mm². Clause 6.3.2.4(b)(1).
Bottom of beam:
Compressive stress 18.252 N/mm² is less than allowable stresses of 0.5*fci=20 N/mm² and 0.4*fcu=21 N/mm².

Long Term Losses

Relaxation after transfer(%) slr(1)=1
Shrinkage per unit length sul(1)=0.3E-3

Summary

Loss	Loss of Force kN	% Loss
Relaxation Elastic Shortening	96 732.67	1.5 11.448
Transfer Total	828.67	12.948
Relaxation Shrinkage Creep	64 316.8 941.55	1 4.95 14.712
Long-term Total	1322.3	20.662
All Losses	2151	33.61

Losses - Long term

Initial force 6400 kN
Final force Pf=P0-loftl=4249 kN
Unit-weight of in-situ concrete wc=24 kN/m³

Loading	Final Stresses N/mm²		
	Top of Beam	Bottom of Beam	Centroid of Strands
Prestress Self weight of Beam In-situ concrete	-5.0001 5.6289 7.0284	17.512 -4.7102 -5.8813	14.497 -3.3255 -4.1523
Total	7.6572	6.9203	7.019

Beam concrete stresses - Long term

Composite section

Height from beam soffit to
bottom of in-situ concrete hsis=202 mm
Perc'age of shrinkage remaining ps=45 %
Percentage pcr=45 %
Percentage stT=60 %
The net moment is Mc=F*e/1E3-Mb=-758.35 kNm
Stress at top of in-situ concrete:
ftisds=-(F/(Ai*mr)-F/(Ai*mr+Ac)-Mc*1E3*(di-Yc)/Ic)*mr*1E3
=-0.10982 N/mm²
Stress at bottom of in-situ concrete:
fbisds=-(F/(Ai*mr)-F/(Ai*mr+Ac)-Mc*1E3*(hsis-Yc)/Ic)*mr*1E3
=3.1235 N/mm²
Stress at top of precast concrete beam:

ftpbds=(F/(Ai*mr+Ac)+Mc*1E3*(d-Yc)/Ic+Mb*1E3*Yt/Ixx)*1E3
=-2.2853 N/mm²

Stress at bottom of precast concrete beam:
fbpbds=(F/(Ai*mr+Ac)-Mc*1E3*Yc/Ic-Mb*1E3*Yb/Ixx)*1E3=-0.50847 N/mm²

Combination 1 loading

Applied bending moment c1b(1)=750 kNm

Loading	Combination 1 Stresses N/mm²			
	Top of in-situ	Top of Beam	Bottom of in-situ	Bottom of Beam
Prestress,beam and in-situ	0	7.6572	0	6.9203
Dif. shrinkage	-0.10982	-2.2853	3.1235	-0.50847
Combination 1	1.993	1.3628	-1.5369	-2.1903
Total	1.8832	6.7347	1.5866	4.2216

Combination 1 Loading - Stresses

Combination 2 to 5 loading

Applied bending moment c2b(1)=1100 kNm

Loading	Combination 2 to 5 Stresses N/mm²			
	Top of in-situ	Top of Beam	Bottom of in-situ	Bottom of Beam
Prestress,beam and in-situ	0	7.6572	0	6.9203
Dif. shrinkage	-0.10982	-2.2853	3.1235	-0.50847
Combination 2-5	2.4359	1.6656	-2.2541	-3.2124
Total	2.3261	7.0375	0.86942	3.1995

Combination 2 to 5 Loading - Stresses

Combination 3 loading. The stresses from the Proforma for temperature differences should be added to the total stresses.

Top of in-situ concrete:
Compressive stress 2.3261 N/mm² is less than the maximum allowable stress of 0.5*fcuc=20 N/mm².
Top of beam:
Compressive stress 7.0375 N/mm² is less than the maximum allowable stress of 0.4*fcu=21 N/mm².
Bottom of in-situ concrete:
Compressive stress 0.86942 N/mm² is less than the maximum allowable stress of 0.5*fcuc=20 N/mm².

Bottom of beam:
Compressive stress 3.1995 N/mm² is less than the maximum allowable stress of 0.4*fcu=21 N/mm².

Location: Ex3 - 15 metre span Y1 beam

Precast prestressed concrete Y beams with in-situ top slab

Calculations for stresses at the Serviceability Limit State (SLS) to BS5400-4:1990 implemented by DOT Departmental Standard BD 44/15.

Span of beam span=15 m

Beam Y 1 section properties

Depth of beam	d=700 mm
Cross-sectional area	Ac=310140 mm²
Centroid above soffit	Yb=255 mm
Section modulus top	Zt=24.88E6 mm³
Section modulus bottom	Zb=43.42E6 mm³
Unit weight of beam	uwb=24.5 kN/m³

Concrete strengths

Strength at transfer	fci=37.5 N/mm²
Characteristic strength	fcu=45 N/mm²

Concrete moduli

Modulus of elasticity at transfer for concrete strength 37.5 N/mm² is:
Eci=30.25 kN/mm²
Modulus of elasticity for concrete strength 45 N/mm² is:
Ecb=32.5 kN/mm²

Composite section properties

Char strength of in-situ concrete fcuc=30 N/mm²
Modulus of elasticity for concrete strength 30 N/mm² is:
Ecc=28 kN/mm²

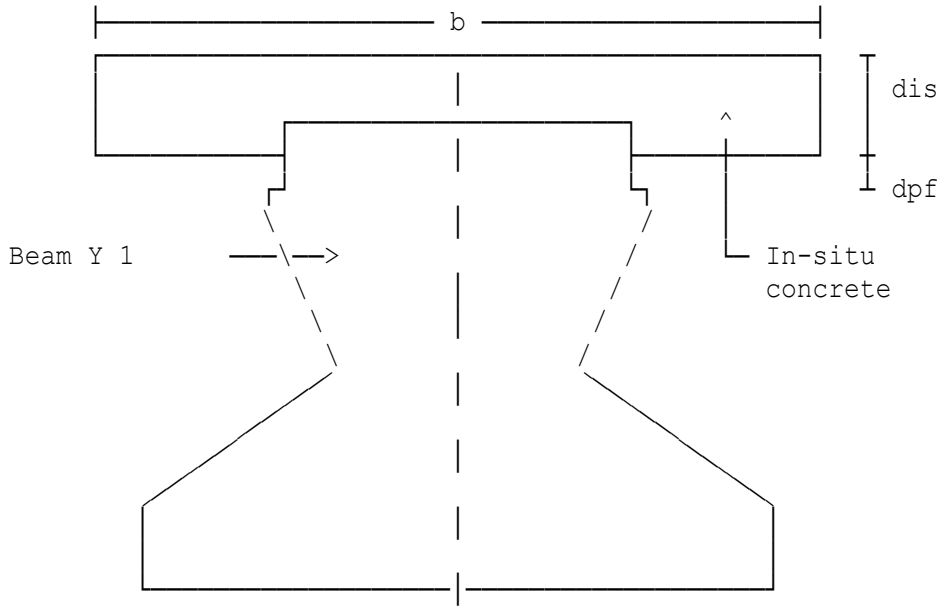

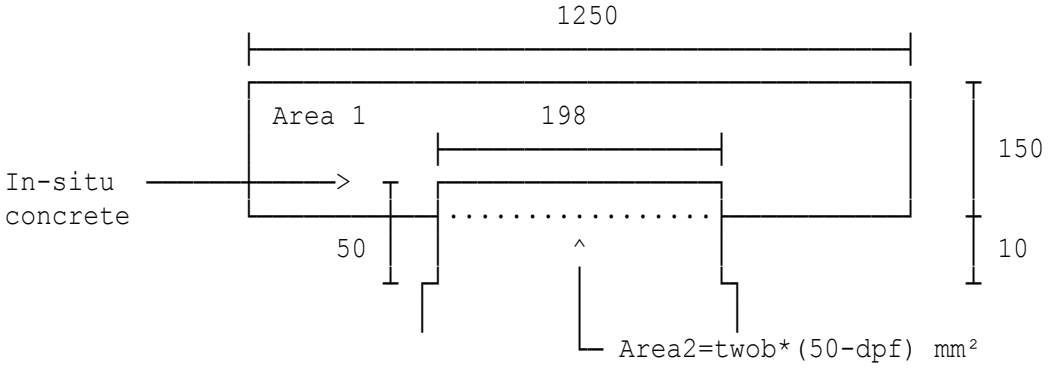

Transf'med second moment of area:

Depth of composite section	di=810 mm
Nominal diameter	nomd=12 mm
Nominal tensile strength	nomt=1600 N/mm²
Nominal steel area	noma=90 mm²
Characteristic breaking load	cbl=160 kN
Initial force per strand	if=100 kN
Modulus of elasticity	Es=200 kN/mm²

Cross-section 1

Distance from mid-span of beam	csd(1)=2.4 m
Number of layers of strand	nls(1)=3
Height above soffit	ds(1)=50 mm
Number of strands	ns(1)=8

WARNING:
Strand location is non-standard.

Height above soffit	ds(2)=100 mm
Number of strands	ns(2)=12

WARNING:
Strand location is non-standard.

Height above soffit ds(3)=250 mm
Number of strands ns(3)=6

WARNING:
Strand location is non-standard.

Bending moment from temp.loads tlb(1)=166 kNm
Bending moment from other loads olb(1)=191 kNm

Short Term Losses

Relaxation at transfer (%) str=1

Summary

Loss	Loss of Force kN	% Loss
Relaxation	26	1
Elastic Shortening	194.7	7.4885
Transfer Total	220.7	8.4885

Losses at Transfer

Initial force 2600 kN
Force at transfer Pt=P0-loft=2379.3 kN

Loading	Stresses at Transfer N/mm²		
	Top of Beam	Bottom of Beam	Centroid of Strands
Prestress	-5.3115	15.111	11.633
Self weight of Beam	7.7096	-4.4178	-2.3522
Temporary Loads	6.6717	-3.8231	-2.0355
Other Loads	7.6765	-4.3989	-2.3421
Total	16.746	2.4716	4.903

Beam Concrete Stresses at Transfer

Stress Limitations

Top of beam:
Compressive stress 16.746 N/mm² is less than allowable stresses of 0.5*fci=18.75 N/mm² and 0.4*fcu=18 N/mm².
Bottom of beam:
Compressive stress 2.4716 N/mm² is less than allowable stresses of 0.5*fci=18.75 N/mm² and 0.4*fcu=18 N/mm².

Long Term Losses

Relaxation after transfer(%) slr(1)=0.8
Shrinkage per unit length sul(1)=0.3E-3

Summary

Loss	Loss of Force kN	% Loss
Relaxation Elastic Shortening	26 194.7	1 7.4885
Transfer Total	220.7	8.4885
Relaxation Shrinkage Creep	20.8 140.4 166.26	0.8 5.4 6.3946
Long-term Total	327.46	12.595
All Losses	548.16	21.083

Losses - Long term

Initial force 2600 kN
Final force Pf=P0-loftl=2051.8 kN
Unit-weight of in-situ concrete wc=24 kN/m³

Loading	Final Stresses N/mm²		
	Top of Beam	Bottom of Beam	Centroid of Strands
Prestress Self weight of Beam In-situ concrete	-4.5805 7.7096 4.373	13.032 -4.4178 -2.5058	10.032 -2.3522 -1.3342
Total	7.502	6.108	6.3455

Beam concrete stresses - Long term

Composite section

Height from beam soffit to
bottom of in-situ concrete hsis=660 mm
Perc'age of shrinkage remaining ps=50 %
Percentage pcr=50 %
Percentage stT=45 %
The net moment is Mc=F*e/1E3-Mb=-156.01 kNm
Stress at top of in-situ concrete:
ftisds=-(F/(Ai*mr)-F/(Ai*mr+Ac)-Mc*1E3*(di-Yc)/Ic)*mr*1E3
=0.28208 N/mm²
Stress at bottom of in-situ concrete:

fbisds=-(F/(Ai*mr)-F/(Ai*mr+Ac)-Mc*1E3*(hsis-Yc)/Ic)*mr*1E3
=0.85199 N/mm²

Stress at top of precast concrete beam:
ftpbds=(F/(Ai*mr+Ac)+Mc*1E3*(d-Yc)/Ic+Mb*1E3*Yt/Ixx)*1E3
=-2.2156 N/mm²

Stress at bottom of precast concrete beam:
fbpbds=(F/(Ai*mr+Ac)-Mc*1E3*Yc/Ic-Mb*1E3*Yb/Ixx)*1E3=0.76152 N/mm²

Combination 1 loading

Applied bending moment c1b(1)=400 kNm

Loading	Combination 1 Stresses N/mm²			
	Top of in-situ	Top of Beam	Bottom of in-situ	Bottom of Beam
Prestress,beam and in-situ	0	7.502	0	6.108
Dif. shrinkage	0.28208	-2.2156	0.85199	0.76152
Combination 1	5.7636	4.8243	3.5718	-4.6988
Total	6.0457	10.111	4.4238	2.1707

Combination 1 Loading - Stresses

Combination 2 to 5 loading

Applied bending moment c2b(1)=700 kNm

Loading	Combination 2 to 5 Stresses N/mm²			
	Top of in-situ	Top of Beam	Bottom of in-situ	Bottom of Beam
Prestress,beam and in-situ	0	7.502	0	6.108
Dif. shrinkage	0.28208	-2.2156	0.85199	0.76152
Combination 2-5	6.7242	5.6283	4.1671	-8.223
Total	7.0063	10.915	5.0191	-1.3534

Combination 2 to 5 Loading - Stresses

Combination 3 loading. The stresses from the Proforma for temperature differences should be added to the total stresses.

Top of in-situ concrete:
Compressive stress 7.0063 N/mm² is less than the maximum allowable stress of 0.5*fcuc=15 N/mm².
Top of beam:
Compressive stress 10.915 N/mm² is less than the maximum allowable stress of 0.4*fcu=18 N/mm².

Bottom of in-situ concrete:
Compressive stress 5.0191 N/mm² is less than the maximum allowable stress of 0.5*fcuc=15 N/mm².
Bottom of beam:
Tensile stress 1.3534 N/mm² is less than the maximum allowable tensile stress of 3.0187 N/mm².

Location: Ex1 - 20 metre span Y beam

Precast prestressed concrete Y beams with in-situ top slab

Calculations for stresses at the Serviceability Limit State (SLS) in accordance with BS EN 1992-2:2005 and NA to BS EN 1992-2:2005.

Beam span under consideration span=20 m

Beam Y 4 section properties

Depth of beam	d=1000 mm
Cross-sectional area	Ac=410880 mm²
Centroid above soffit	Yb=399.3 mm
Section modulus top	Zt=63.63E6 mm³
Section modulus bottom	Zb=95.72E6 mm³
Unit weight of beam	uwb=24 kN/m³

Concrete compressive strengths

Characteristic cylinder strength	fcki=32 N/mm² (transfer)
Characteristic cylinder strength	fck=40 N/mm²

Concrete moduli (short-term)

Concrete modulus of elasticity	Ecmi=33 kN/mm² (transfer)
Concrete modulus of elasticity	Ecmb=35 kN/mm²

Composite section properties

Char strength (in-situ concrete)	fckc=33 N/mm²
Short-term modulus of elasticity for in-situ concrete	Ecmc=34 kN/mm²

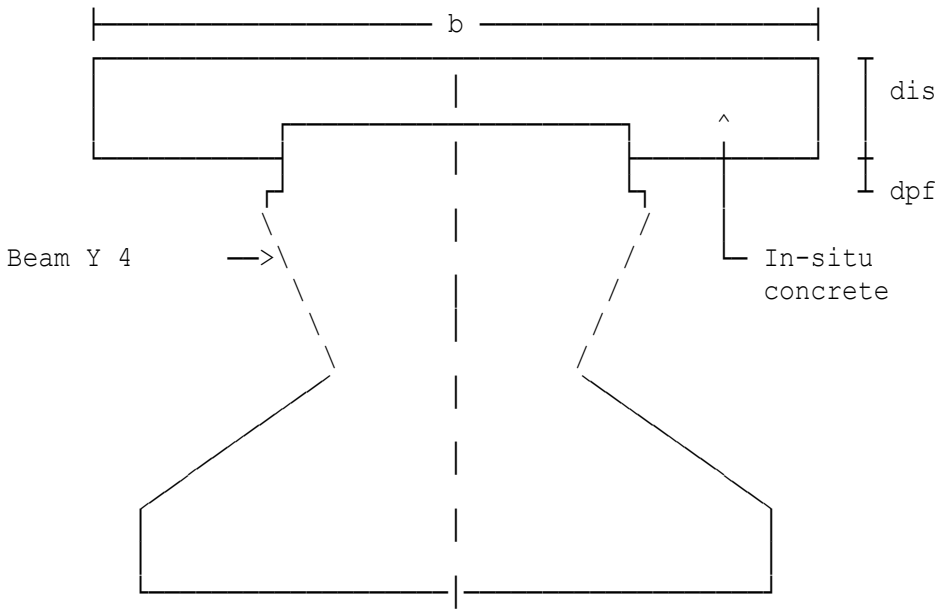

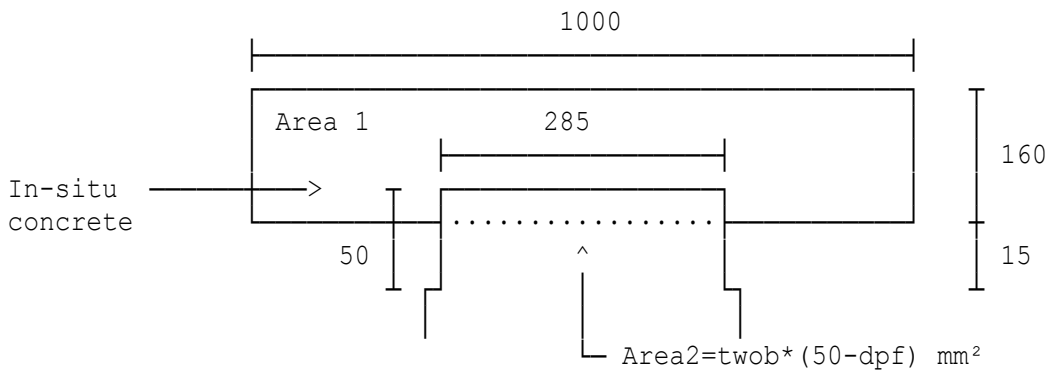

Second moment of area:
Depth of composite section di=1125 mm
Modulus of elasticity (strand) Ep=195 kN/mm²

Cross-section 1

Distance from mid-span of beam csd(1)=0 m
Number of layers of strand nls(1)=4
Height above soffit ds(1)=60 mm
Number of strands ns(1)=11
Height above soffit ds(2)=110 mm
Number of strands ns(2)=14
Height above soffit ds(3)=800 mm
Number of strands ns(3)=2
Height above soffit ds(4)=900 mm
Number of strands ns(4)=2

Short Term Losses (BS EN 1992-1-1)

Relaxation at transfer (%) str=1
Loss of force (expression 5.46) lfst=lfst'/(1+comp1*comp2)=389.1 kN
Force after losses P2=P1-lfst=4606.4 kN
Elastic deform. losses (%) ste=lfst*100/P0=7.7111 %

Summary

Loss	Loss of Force kN	% Loss
Relaxation Elastic Shortening	50.46 389.1	1 7.7111
Transfer Total	439.56	8.7111

Losses at Transfer

Initial force 5046 kN
Force at transfer Pt=P0-loft=4606.4 kN

Loading	Stresses at Transfer N/mm²		
	Top of Beam	Bottom of Beam	Centroid of Strands
Prestress Self weight of Beam	-3.7169 7.7491	21.134 -5.151	16.335 -2.66
Total	4.0322	15.983	13.675

Beam Concrete Stresses at Transfer

Stress Limitations (BS EN 1992-1-1, Clause 5.10.2.2)

Top of beam:
Compressive stress 4.0322 N/mm² is less than allowable stresses of 0.7*fcki=22.4 N/mm² and 0.6*fck=24 N/mm².
Bottom of beam:
Compressive stress 15.983 N/mm² is less than allowable stresses of 0.7*fcki=22.4 N/mm² and 0.6*fck=24 N/mm².

Long Term Losses (BS EN 1992-1-1, Clause 5.10.6(1))

Relaxation after transfer(%) slr(1)=2
Shrinkage per unit length sul(1)=0.3E-3
Creep coefficient φ(∞,to) crf=2

Summary

Loss	Loss of Force kN	% Loss
Relaxation Elastic Shortening	50.46 389.1	1 7.7111
Transfer Total	439.56	8.7111
Relaxation Shrinkage Creep	100.92 235.81 661.57	2 4.6733 13.111
Long-term Total	998.31	19.784
All Losses	1437.9	28.495

Losses - Long term

Initial force 5046 kN
Final force Pf=P0-loftl=3608.1 kN
Unit-weight of in-situ concrete wc=24 kN/m³

Loading	Final Stresses N/mm²		
	Top of Beam	Bottom of Beam	Centroid of Strands
Prestress	-2.9114	16.554	12.795
Self weight of Beam	7.7491	-5.151	-2.66
In-situ concrete	2.8294	-1.8808	-0.97123
Total	7.6672	9.5222	9.164

Beam concrete stresses - Long term

Composite section

Height from beam soffit to
bottom of in-situ concrete hsis=965 mm
Perc'age of shrinkage remaining ps=25 %
Percentage pcr=25 %
Percentage stT=67 %
The net moment is Mc=F*e/1E3-Mb=-129.72 kNm
Stress at top of in-situ concrete:
ftisds=-(F/(Ai*mr)-F/(Ai*mr+Ac)-Mc*1E3*(di-Yc)/Ic)*mr*1E3
=-0.17953 N/mm²
Stress at bottom of in-situ concrete:
fbisds=-(F/(Ai*mr)-F/(Ai*mr+Ac)-Mc*1E3*(hsis-Yc)/Ic)*mr*1E3
=0.064842 N/mm²
Stress at top of precast concrete beam:
ftpbds=(F/(Ai*mr+Ac)+Mc*1E3*(d-Yc)/Ic+Mb*1E3*Yt/Iyy)*1E3
=0.12802 N/mm²
Stress at bottom of precast concrete beam:
fbpbds=(F/(Ai*mr+Ac)-Mc*1E3*Yc/Ic-Mb*1E3*Yb/Iyy)*1E3
=-0.046384 N/mm²

Loading Combination 1

(no tensile stress permitted in precast beam)
Characteristic bending moment c1b(1)=1400 kNm

Loading	Loading combination 1 Stresses N/mm²			
	Top of in-situ	Top of Beam	Bottom of in-situ	Bottom of Beam
Prestress,beam and in-situ	0	7.6672	0	9.5222
Dif. shrinkage	-0.17953	0.12802	0.064842	-0.046384
Combination 1	11.696	9.0472	8.3055	-9.4472
Total	11.517	16.842	8.3703	0.028537

Loading combination 1 Loading - Stresses

Loading Combination 2

(tensile stress permitted (no visible cracking))
Characteristic bending moment c2b(1)=1850 kNm

Loading	Loading combination 2 Stresses N/mm²			
	Top of in-situ	Top of Beam	Bottom of in-situ	Bottom of Beam
Prestress,beam and in-situ	0	7.6672	0	9.5222
Dif. shrinkage	-0.17953	0.12802	0.064842	-0.046384
Combination 2	12.021	9.2985	8.5362	-12.484
Total	11.842	17.094	8.601	-3.0081

Loading combination 2 - Stresses

NOTE: The stresses from temperature differences should be added to the total stresses.

Top of in-situ concrete:
Compressive stress 11.842 N/mm² is less than the maximum allowable stress of 0.6*fckc=19.8 N/mm².
Top of beam:
Compressive stress 17.094 N/mm² is less than the maximum allowable stress of 0.6*fck=24 N/mm².
Bottom of in-situ concrete:
Compressive stress 8.601 N/mm² is less than the maximum allowable stress of 0.6*fckc=19.8 N/mm².
Bottom of beam:
Tensile stress 3.0081 N/mm² is less than the maximum allowable tensile stress of 3.0263 N/mm².

Location: Ex2 - 29.5 metre span Y8 beam

Precast prestressed concrete Y beams with in-situ top slab

Calculations for stresses at the Serviceability Limit State (SLS) in accordance with BS EN 1992-2:2005 and NA to BS EN 1992-2:2005.

Beam span under consideration span=29.5 m

Beam Y 8 section properties

Depth of beam	d=1400 mm
Cross-sectional area	Ac=585580 mm²
Centroid above soffit	Yb=637.8 mm
Section modulus top	Zt=156.12E6 mm³
Section modulus bottom	Zb=186.56E6 mm³
Unit weight of beam	uwb=24.5 kN/m³

Concrete compressive strengths

Characteristic cylinder strength	fcki=32 N/mm² (transfer)
Characteristic cylinder strength	fck=42 N/mm²

Concrete moduli (short-term)

Concrete modulus of elasticity	Ecmi=34 kN/mm² (transfer)
Concrete modulus of elasticity	Ecmb=36 kN/mm²

Composite section properties

Char strength (in-situ concrete)	fckc=32 N/mm²
Short-term modulus of elasticity for in-situ concrete	Ecmc=33 kN/mm²

Item No. 1

X co-ordinate	X(1)=100 mm
Y co-ordinate	Y(1)=0 mm
X co-ordinate	X(2)=850 mm
Y co-ordinate	Y(2)=0 mm
X co-ordinate	X(3)=850 mm
Y co-ordinate	Y(3)=202 mm
X co-ordinate	X(4)=1100 mm
Y co-ordinate	Y(4)=1300 mm
X co-ordinate	X(5)=1350 mm
Y co-ordinate	Y(5)=1300 mm
X co-ordinate	X(6)=1350 mm
Y co-ordinate	Y(6)=1700 mm
X co-ordinate	X(7)=850 mm
Y co-ordinate	Y(7)=1700 mm
X co-ordinate	X(8)=850 mm
Y co-ordinate	Y(8)=1600 mm
X co-ordinate	X(9)=0 mm
Y co-ordinate	Y(9)=1600 mm

X co-ordinate	X(10)=0 mm
Y co-ordinate	Y(10)=1375 mm
X co-ordinate	X(11)=275 mm
Y co-ordinate	Y(11)=1375 mm
X co-ordinate	X(12)=275 mm
Y co-ordinate	Y(12)=1350 mm
X co-ordinate	X(13)=235 mm
Y co-ordinate	Y(13)=1350 mm
X co-ordinate	X(14)=375 mm
Y co-ordinate	Y(14)=379 mm
X co-ordinate	X(15)=100 mm
Y co-ordinate	Y(15)=202 mm
X co-ordinate	X(16)=100 mm
Y co-ordinate	Y(16)=0 mm
Depth of composite section	di=1700 mm
Area of in-situ concrete	Ai=746403 mm²
Centroid of in-situ concrete	Yi=1170.1 mm
Modulus of elasticity (strand)	Ep=195 kN/mm²

Cross-section 1

Distance from mid-span of beam	csd(1)=9.75 m
Number of layers of strand	nls(1)=4
Height above soffit	ds(1)=60 mm
Number of strands	ns(1)=10
Height above soffit	ds(2)=110 mm
Number of strands	ns(2)=12
Height above soffit	ds(3)=210 mm
Number of strands	ns(3)=8
Height above soffit	ds(4)=1200 mm
Number of strands	ns(4)=2

Short Term Losses (BS EN 1992-1-1)

Relaxation at transfer (%)	str=1.5
Loss of force (expression 5.46)	lfst=lfst'/(1+comp1*comp2)=590.33 kN
Force after losses	P2=P1-lfst=5713.7 kN
Elastic deform. losses (%)	ste=lfst*100/P0=9.2239 %

Summary

Loss	Loss of Force kN	% Loss
Relaxation	96	1.5
Elastic Shortening	590.33	9.2239
Transfer Total	686.33	10.724

Losses at Transfer

Initial force	6400 kN
Force at transfer	Pt=P0-loft=5713.7 kN

Loading	Stresses at Transfer N/mm²		
	Top of Beam	Bottom of Beam	Centroid of Strands
Prestress Self weight of Beam	-6.7237 5.6289	23.548 -4.7102	19.494 -3.3255
Total	-1.0948	18.838	16.169

Beam Concrete Stresses at Transfer

Stress Limitations (BS EN 1992-1-1, Clause 5.10.2.2)

Top of beam:

WARNING:
The flexural tensile stress 1.0948 N/mm² at transfer in the concrete due to prestress and co-existent dead and temporary loads during erection should not exceed 1 N/mm² (as was permitted in BS5400-4).

Bottom of beam:
Compressive stress 18.838 N/mm² is less than allowable stresses of 0.7*fcki=22.4 N/mm² and 0.6*fck=25.2 N/mm².

Long Term Losses (BS EN 1992-1-1, Clause 5.10.6(1))

Relaxation after transfer(%) slr(1)=1
Shrinkage per unit length sul(1)=0.3E-3
Creep coefficient φ(∞,to) crf=2

Summary

Loss	Loss of Force kN	% Loss
Relaxation Elastic Shortening	96 590.33	1.5 9.2239
Transfer Total	686.33	10.724
Relaxation Shrinkage Creep	64 308.88 1138.7	1 4.8263 17.793
Long-term Total	1511.6	23.619
All Losses	2197.9	34.343

Losses - Long term

Initial force 6400 kN

Final force Pf=P0-loftl=4202.1 kN
Unit-weight of in-situ concrete wc=24 kN/m³

Loading	Final Stresses N/mm²		
	Top of Beam	Bottom of Beam	Centroid of Strands
Prestress	-4.9449	17.318	14.337
Self weight of Beam	5.6289	-4.7102	-3.3255
In-situ concrete	7.0284	-5.8813	-4.1523
Total	7.7124	6.727	6.8589

Beam concrete stresses - Long term

Composite section

Height from beam soffit to
bottom of in-situ concrete hsis=202 mm
Perc'age of shrinkage remaining ps=45 %
Percentage pcr=45 %
Percentage stT=60 %
The net moment is Mc=F*e/1E3-Mb=-1024.7 kNm
Stress at top of in-situ concrete:
ftisds=-(F/(Ai*mr)-F/(Ai*mr+Ac)-Mc*1E3*(di-Yc)/Ic)*mr*1E3
=-0.23412 N/mm²
Stress at bottom of in-situ concrete:
fbisds=-(F/(Ai*mr)-F/(Ai*mr+Ac)-Mc*1E3*(hsis-Yc)/Ic)*mr*1E3
=4.3851 N/mm²
Stress at top of precast concrete beam:
ftpbds=(F/(Ai*mr+Ac)+Mc*1E3*(d-Yc)/Ic+Mb*1E3*Yt/Iyy)*1E3
=-2.9706 N/mm²
Stress at bottom of precast concrete beam:
fbpbds=(F/(Ai*mr+Ac)-Mc*1E3*Yc/Ic-Mb*1E3*Yb/Iyy)*1E3
=-0.79191 N/mm²

Loading Combination 1

(no tensile stress permitted in precast beam)
Characteristic bending moment c1b(1)=750 kNm

Loading	Loading combination 1 Stresses N/mm²			
	Top of in-situ	Top of Beam	Bottom of in-situ	Bottom of Beam
Prestress,beam and in-situ	0	7.7124	0	6.727
Dif. shrinkage	-0.23412	-2.9706	4.3851	-0.79191
Combination 1	2.069	1.2565	-1.6567	-2.1126
Total	1.8349	5.9983	2.7283	3.8224

Loading combination 1 Loading - Stresses

Loading Combination 2

(tensile stress permitted (no visible cracking))
Characteristic bending moment c2b(1)=1100 kNm

Loading	Loading combination 2 Stresses N/mm²			
	Top of in-situ	Top of Beam	Bottom of in-situ	Bottom of Beam
Prestress,beam and in-situ	0	7.7124	0	6.727
Dif. shrinkage	-0.23412	-2.9706	4.3851	-0.79191
Combination 2	2.5287	1.5357	-2.4299	-3.0986
Total	2.2946	6.2776	1.9552	2.8365

Loading combination 2 - Stresses

NOTE: The stresses from temperature differences should be added to the total stresses.

Top of in-situ concrete:
Compressive stress 2.2946 N/mm² is less than the maximum allowable stress of 0.6*fckc=19.2 N/mm².
Top of beam:
Compressive stress 6.2776 N/mm² is less than the maximum allowable stress of 0.6*fck=25.2 N/mm².
Bottom of in-situ concrete:
Compressive stress 1.9552 N/mm² is less than the maximum allowable stress of 0.6*fckc=19.2 N/mm².
Bottom of beam:
Compressive stress 2.8365 N/mm² is less than the maximum allowable stress of 0.6*fck=25.2 N/mm².

Location: Ex3 - 15 metre span Y1 beam

Precast prestressed concrete Y beams with in-situ top slab

Calculations for stresses at the Serviceability Limit State (SLS) in accordance with BS EN 1992-2:2005 and NA to BS EN 1992-2:2005.

Beam span under consideration span=15 m

Beam Y 1 section properties

Depth of beam	d=700 mm
Cross-sectional area	Ac=310140 mm²
Centroid above soffit	Yb=255 mm
Section modulus top	Zt=24.88E6 mm³
Section modulus bottom	Zb=43.42E6 mm³
Unit weight of beam	uwb=24.5 kN/m³

Concrete compressive strengths

Characteristic cylinder strength	fcki=30 N/mm² (transfer)
Characteristic cylinder strength	fck=35 N/mm²

Concrete moduli (short-term)

Concrete modulus of elasticity	Ecmi=33 kN/mm² (transfer)
Concrete modulus of elasticity	Ecmb=34 kN/mm²

Composite section properties

Char strength (in-situ concrete)	fckc=25 N/mm²
Short-term modulus of elasticity for in-situ concrete	Ecmc=31 kN/mm²

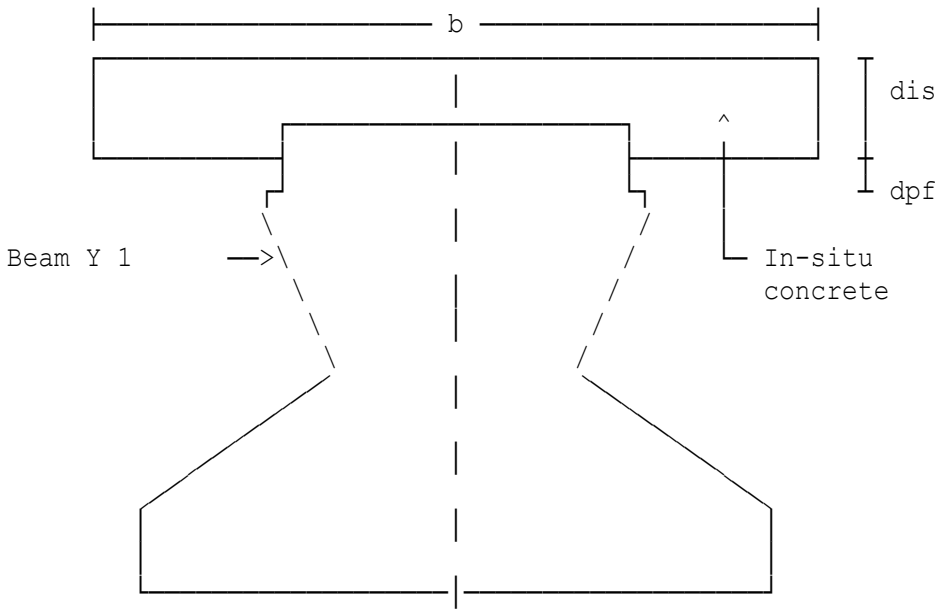

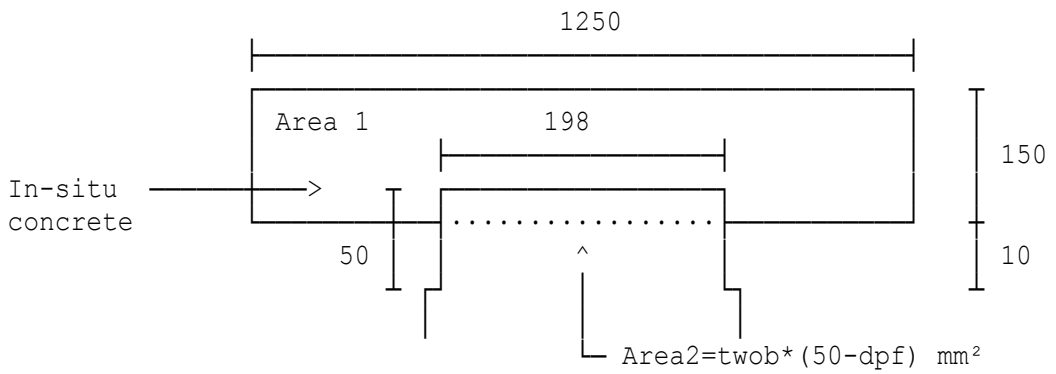

Second moment of area:

Depth of composite section	di=810 mm
Nominal diameter	nomd=12 mm
Nominal tensile strength	nomt=1600 N/mm²
Nominal steel area	noma=90 mm²
Characteristic breaking load	fpk=160 kN
Initial force per strand	ipf=100 kN
Modulus of elasticity (strand)	Ep=195 kN/mm²

Cross-section 1

Distance from mid-span of beam	csd(1)=2.4 m
Number of layers of strand	nls(1)=3
Height above soffit	ds(1)=50 mm
Number of strands	ns(1)=8

WARNING:
Strand location is non-standard.

Height above soffit	ds(2)=100 mm
Number of strands	ns(2)=12

WARNING:
Strand location is non-standard.

Height above soffit	ds(3)=250 mm
Number of strands	ns(3)=6

WARNING:
Strand location is non-standard.

Bending moment from temp.loads	tlb(1)=166 kNm
Bending moment from other loads	olb(1)=191 kNm

Short Term Losses (BS EN 1992-1-1)

Relaxation at transfer (%)	str=1
Loss of force (expression 5.46)	lfst=lfst'/(1+comp1*comp2)=162.99 kN
Force after losses	P2=P1-lfst=2411 kN
Elastic deform. losses (%)	ste=lfst*100/P0=6.269 %

Summary

Loss	Loss of Force kN	% Loss
Relaxation	26	1
Elastic Shortening	162.99	6.269
Transfer Total	188.99	7.269

Losses at Transfer

Initial force 2600 kN
Force at transfer Pt=P0-loft=2411 kN

Loading	Stresses at Transfer N/mm²		
	Top of Beam	Bottom of Beam	Centroid of Strands
Prestress	-5.3822	15.313	11.788
Self weight of Beam	7.7096	-4.4178	-2.3522
Temporary Loads	6.6717	-3.8231	-2.0355
Other Loads	7.6765	-4.3989	-2.3421
Total	16.676	2.673	5.0581

Beam Concrete Stresses at Transfer

Stress Limitations (BS EN 1992-1-1, Clause 5.10.2.2)

Top of beam:
Compressive stress 16.676 N/mm² is less than allowable stresses of 0.7*fcki=21 N/mm² and 0.6*fck=21 N/mm².
Bottom of beam:
Compressive stress 2.673 N/mm² is less than allowable stresses of 0.7*fcki=21 N/mm² and 0.6*fck=21 N/mm².

Long Term Losses (BS EN 1992-1-1, Clause 5.10.6(1))

Relaxation after transfer(%) slr(1)=0.8
Shrinkage per unit length sul(1)=0.3E-3
Creep coefficient φ(∞,to) crf=2

Summary

Loss	Loss of Force kN	% Loss
Relaxation Elastic Shortening	26 162.99	1 6.269
Transfer Total	188.99	7.269
Relaxation Shrinkage Creep	20.8 136.89 190.4	0.8 5.265 7.3231
Long-term Total	348.09	13.388
All Losses	537.08	20.657

Losses - Long term

Initial force 2600 kN
Final force Pf=P0-loftl=2062.9 kN
Unit-weight of in-situ concrete wc=24 kN/m³

Loading	Final Stresses N/mm²		
	Top of Beam	Bottom of Beam	Centroid of Strands
Prestress Self weight of Beam In-situ concrete	-4.6052 7.7096 4.373	13.102 -4.4178 -2.5058	10.086 -2.3522 -1.3342
Total	7.4773	6.1784	6.3996

Beam concrete stresses - Long term

Composite section

Height from beam soffit to
bottom of in-situ concrete hsis=660 mm
Perc'age of shrinkage remaining ps=50 %
Percentage pcr=50 %
Percentage stT=45 %
The net moment is Mc=F*e/1E3-Mb=-209.35 kNm
Stress at top of in-situ concrete:
ftisds=-(F/(Ai*mr)-F/(Ai*mr+Ac)-Mc*1E3*(di-Yc)/Ic)*mr*1E3
=0.27142 N/mm²
Stress at bottom of in-situ concrete:
fbisds=-(F/(Ai*mr)-F/(Ai*mr+Ac)-Mc*1E3*(hsis-Yc)/Ic)*mr*1E3
=1.1007 N/mm²
Stress at top of precast concrete beam:

ftpbds=(F/(Ai*mr+Ac)+Mc*1E3*(d-Yc)/Ic+Mb*1E3*Yt/Iyy)*1E3
=-2.6593 N/mm²

Stress at bottom of precast concrete beam:

fbpbds=(F/(Ai*mr+Ac)-Mc*1E3*Yc/Ic-Mb*1E3*Yb/Iyy)*1E3
=0.91119 N/mm²

Loading Combination 1

(no tensile stress permitted in precast beam)
Characteristic bending moment c1b(1)=400 kNm

Loading	Loading combination 1 Stresses N/mm²			
	Top of in-situ	Top of Beam	Bottom of in-situ	Bottom of Beam
Prestress,beam and in-situ	0	7.4773	0	6.1784
Dif. shrinkage	0.27142	-2.6593	1.1007	0.91119
Combination 1	5.991	4.2481	3.6142	-4.5625
Total	6.2625	9.0661	4.715	2.5271

Loading combination 1 Loading - Stresses

Loading Combination 2

(tensile stress permitted (no visible cracking))
Characteristic bending moment c2b(1)=700 kNm

Loading	Loading combination 2 Stresses N/mm²			
	Top of in-situ	Top of Beam	Bottom of in-situ	Bottom of Beam
Prestress,beam and in-situ	0	7.4773	0	6.1784
Dif. shrinkage	0.27142	-2.6593	1.1007	0.91119
Combination 2	6.9895	4.9561	4.2166	-7.9843
Total	7.261	9.7741	5.3173	-0.89473

Loading combination 2 - Stresses

NOTE: The stresses from temperature differences should be added to the total stresses.

Top of in-situ concrete:
Compressive stress 7.261 N/mm² is less than the maximum allowable stress of 0.6*fckc=15 N/mm².
Top of beam:
Compressive stress 9.7741 N/mm² is less than the maximum allowable stress of 0.6*fck=21 N/mm².
Bottom of in-situ concrete:
Compressive stress 5.3173 N/mm² is less than the maximum allowable stress of 0.6*fckc=15 N/mm².

Bottom of beam:
Tensile stress 0.89473 N/mm² is less than the maximum allowable tensile stress of 2.9399 N/mm².

Location: Ex1 - 20 metre span U beam

Precast prestressed concrete U beams with in-situ top slab

Calculations for stresses at the Serviceability Limit State (SLS) to BS5400-4:1990 implemented by DOT Departmental Standard BD 44/15.

Span of beam span=20 m

Beam U 7 section properties

Depth of beam d=1100 mm
Cross-sectional area Ac=577217 mm²
Centroid above soffit Yb=491.7 mm
Section modulus top Zt=121.93E6 mm³
Section modulus bottom Zb=150.83E6 mm³
Unit weight of beam uwb=24 kN/m³

Concrete strengths

Strength at transfer fci=40 N/mm²
Characteristic strength fcu=50 N/mm²

Concrete moduli

Modulus of elasticity at transfer for concrete strength 40 N/mm² is:
Eci=31 kN/mm²
Modulus of elasticity for concrete strength 50 N/mm² is:
Ecb=34 kN/mm²

Composite section properties

Char strength (in-situ concrete) fcuc=40 N/mm²
Modulus of elasticity for concrete strength 40 N/mm² is:
Ecc=31 kN/mm²

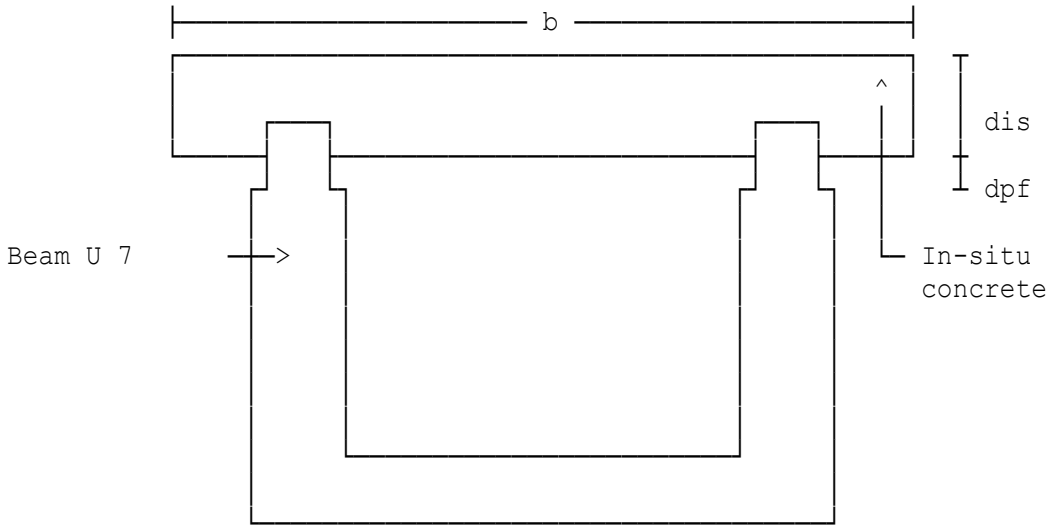

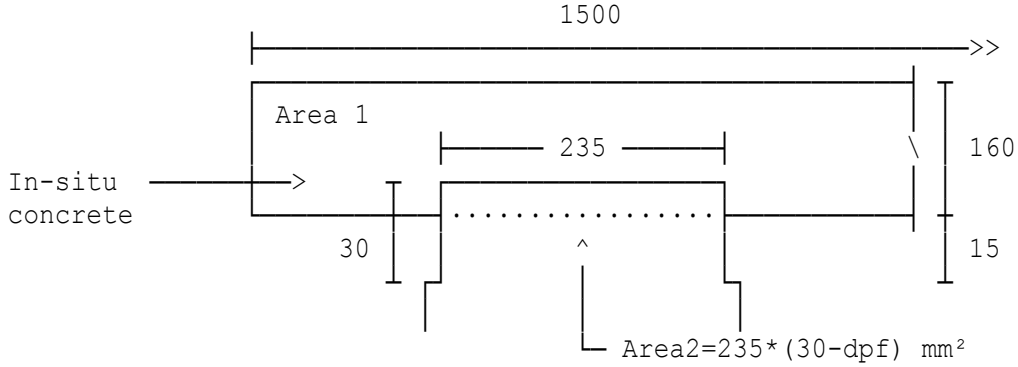

Second moment of area:

Depth of composite section	di=1245 mm
Initial force per strand	if=174 kN
Modulus of elasticity	Es=200 kN/mm²

Cross-section 1

Distance from mid-span of beam	csd(1)=0 m
Number of layers of strand	nls(1)=4
Height above soffit	ds(1)=60 mm
Number of strands	ns(1)=14
Height above soffit	ds(2)=110 mm
Number of strands	ns(2)=12
Height above soffit	ds(3)=700 mm
Number of strands	ns(3)=4
Height above soffit	ds(4)=1000 mm
Number of strands	ns(4)=4

Short Term Losses

Relaxation at transfer (%)	str=1

Summary

Loss	Loss of Force kN	% Loss
Relaxation	59.16	1
Elastic Shortening	434.74	7.3485
Transfer Total	493.9	8.3485

Losses at Transfer

Initial force	5916 kN
Force at transfer	Pt=P0-loft=5422.1 kN

Loading	Stresses at Transfer N/mm²		
	Top of Beam	Bottom of Beam	Centroid of Strands
Prestress Self weight of Beam	-0.75393 5.6813	17.596 -4.5923	13.2 -2.131
Total	4.9274	13.004	11.069

Beam Concrete Stresses at Transfer

Stress Limitations

Top of beam:
Compressive stress 4.9274 N/mm² is less than allowable stresses of 0.5*fci=20 N/mm² and 0.4*fcu=20 N/mm².
Bottom of beam:
Compressive stress 13.004 N/mm² is less than allowable stresses of 0.5*fci=20 N/mm² and 0.4*fcu=20 N/mm².

Long Term Losses

Relaxation after transfer(%) slr(1)=2
Shrinkage per unit length sul(1)=0.3E-3

Summary

Loss	Loss of Force kN	% Loss
Relaxation Elastic Shortening	59.16 434.74	1 7.3485
Transfer Total	493.9	8.3485
Relaxation Shrinkage Creep	118.32 283.56 502.18	2 4.7931 8.4886
Long-term Total	904.06	15.282
All Losses	1398	23.63

Losses - Long term

Initial force 5916 kN
Final force Pf=P0-loftl=4518 kN
Unit-weight of in-situ concrete wc=24 kN/m³

Loading	Final Stresses N/mm²		
	Top of Beam	Bottom of Beam	Centroid of Strands
Prestress	-0.62822	14.662	10.999
Self weight of Beam	5.6813	-4.5923	-2.131
In-situ concrete	2.2928	-1.8533	-0.86003
Total	7.3459	8.2164	8.0078

Beam concrete stresses - Long term

Composite section

Height from beam soffit to
bottom of in-situ concrete hsis=1065 mm
Perc'age of shrinkage remaining ps=25 %
Percentage pcr=25 %
Percentage stT=67 %
The net moment is Mc=F*e/1E3-Mb=-7.8846 kNm
Stress at top of in-situ concrete:
ftisds=-(F/(Ai*mr)-F/(Ai*mr+Ac)-Mc*1E3*(di-Yc)/Ic)*mr*1E3
=-0.26514 N/mm²
Stress at bottom of in-situ concrete:
fbisds=-(F/(Ai*mr)-F/(Ai*mr+Ac)-Mc*1E3*(hsis-Yc)/Ic)*mr*1E3
=-0.2557 N/mm²
Stress at top of precast concrete beam:
ftpbds=(F/(Ai*mr+Ac)+Mc*1E3*(d-Yc)/Ic+Mb*1E3*Yt/Ixx)*1E3
=0.44251 N/mm²
Stress at bottom of precast concrete beam:
fbpbds=(F/(Ai*mr+Ac)-Mc*1E3*Yc/Ic-Mb*1E3*Yb/Ixx)*1E3=-0.16716 N/mm²

Combination 1 loading

Applied bending moment c1b(1)=1440 kNm

Loading	Combination 1 Stresses N/mm²			
	Top of in-situ	Top of Beam	Bottom of in-situ	Bottom of Beam
Prestress,beam and in-situ.	0	7.3459	0	8.2164
Dif. shrinkage	-0.26514	0.44251	-0.2557	-0.16716
Combination 1	7.715	5.714	5.231	-6.5688
Total	7.4498	13.502	4.9753	1.4804

Combination 1 Loading - Stresses

Combination 2 to 5 loading

Applied bending moment c2b(1)=1907 kNm

Loading	Combination 2 to 5 Stresses N/mm²			
	Top of in-situ	Top of Beam	Bottom of in-situ	Bottom of Beam
Prestress,beam and in-situ	0	7.3459	0	8.2164
Dif. shrinkage	-0.26514	0.44251	-0.2557	-0.16716
Combination 2-5	7.0903	5.2514	4.8075	-8.6991
Total	6.8252	13.04	4.5518	-0.64994

Combination 2 to 5 Loading - Stresses

Combination 3 loading. The stresses from the Proforma for temperature differences should be added to the total stresses.

Top of in-situ concrete:
Compressive stress 6.8252 N/mm² is less than the maximum allowable stress of 0.5*fcuc=20 N/mm².
Top of beam:
Compressive stress 13.04 N/mm² is less than the maximum allowable stress of 0.4*fcu=20 N/mm².
Bottom of in-situ concrete:
Compressive stress 4.5518 N/mm² is less than the maximum allowable stress of 0.5*fcuc=20 N/mm².
Bottom of beam:
Tensile stress 0.64994 N/mm² is less than the maximum allowable tensile stress of 3.182 N/mm².

Location: Ex2 - 25 metre span U10 beam

Precast prestressed concrete U beams with in-situ top slab

Calculations for stresses at the Serviceability Limit State (SLS) to BS5400-4:1990 implemented by DOT Departmental Standard BD 44/15.

Span of beam span=25 m

Beam U 10 section properties

Depth of beam d=1400 mm
Cross-sectional area Ac=677357 mm²
Centroid above soffit Yb=634.3 mm
Section modulus top Zt=187.93E6 mm³
Section modulus bottom Zb=226.9E6 mm³
Unit weight of beam uwb=24.5 kN/m³

Concrete strengths

Strength at transfer fci=45 N/mm²
Characteristic strength fcu=50 N/mm²

Concrete moduli

Modulus of elasticity at transfer for concrete strength 45 N/mm² is:
Eci=32.5 kN/mm²
Modulus of elasticity for concrete strength 50 N/mm² is:
Ecb=34 kN/mm²

Composite section properties

Char strength (in-situ concrete) fcuc=35 N/mm²
Modulus of elasticity for concrete strength 35 N/mm² is:
Ecc=29.5 kN/mm²

Item No. 1

Item weighting iw1=0.86765
X co-ordinate X(1)=0 mm
Y co-ordinate Y(1)=1380 mm
X co-ordinate X(2)=370 mm
Y co-ordinate Y(2)=1380 mm
X co-ordinate X(3)=370 mm
Y co-ordinate Y(3)=1400 mm
X co-ordinate X(4)=605 mm
Y co-ordinate Y(4)=1400 mm
X co-ordinate X(5)=605 mm
Y co-ordinate Y(5)=1380 mm
X co-ordinate X(6)=1246 mm
Y co-ordinate Y(6)=1380 mm
X co-ordinate X(7)=1246 mm
Y co-ordinate Y(7)=1400 mm
X co-ordinate X(8)=1481 mm

Y co-ordinate	Y(8)=1400 mm
X co-ordinate	X(9)=1481 mm
Y co-ordinate	Y(9)=1380 mm
X co-ordinate	X(10)=1981 mm
Y co-ordinate	Y(10)=1380 mm
X co-ordinate	X(11)=1981 mm
Y co-ordinate	Y(11)=1680 mm
X co-ordinate	X(12)=1481 mm
Y co-ordinate	Y(12)=1680 mm
X co-ordinate	X(13)=1481 mm
Y co-ordinate	Y(13)=1580 mm
X co-ordinate	X(14)=0 mm
Y co-ordinate	Y(14)=1580 mm
X co-ordinate	X(15)=0 mm
Y co-ordinate	Y(15)=1380 mm

Item No. 2

Second moment of area	IXX2=143.92E9 mm^4
Area of item	A2=677357 mm^2
Centroid above soffit	YC2=634.3 mm
Item weighting	iw2=1
Depth of composite section	di=1680 mm
Initial force per strand	if=90 kN
Modulus of elasticity	Es=200 kN/mm^2

Cross-section 1

Distance from mid-span of beam	csd(1)=4.5 m
Number of layers of strand	nls(1)=4
Height above soffit	ds(1)=60 mm
Number of strands	ns(1)=16
Height above soffit	ds(2)=110 mm
Number of strands	ns(2)=12
Height above soffit	ds(3)=800 mm
Number of strands	ns(3)=4
Height above soffit	ds(4)=1300 mm
Number of strands	ns(4)=4

Short Term Losses

Relaxation at transfer (%)	str=1.25

Summary

Loss	Loss of Force kN	% Loss
Relaxation	40.5	1.25
Elastic Shortening	120.59	3.7219
Transfer Total	161.09	4.9719

Losses at Transfer

Initial force	3240 kN

Force at transfer Pt=P0-loft=3078.9 kN

Loading	Stresses at Transfer N/mm²		
	Top of Beam	Bottom of Beam	Centroid of Strands
Prestress Self weight of Beam	-0.98512 6.0037	9.127 -4.9735	6.9842 -2.6473
Total	5.0186	4.1535	4.3368

Beam Concrete Stresses at Transfer

Stress Limitations

Top of beam:
Compressive stress 5.0186 N/mm² is less than allowable stresses of 0.5*fci=22.5 N/mm² and 0.4*fcu=20 N/mm².
Bottom of beam:
Compressive stress 4.1535 N/mm² is less than allowable stresses of 0.5*fci=22.5 N/mm² and 0.4*fcu=20 N/mm².

Long Term Losses

Relaxation after transfer(%) slr(1)=1
Shrinkage per unit length sul(1)=0.3E-3

Summary

Loss	Loss of Force kN	% Loss
Relaxation Elastic Shortening	40.5 120.59	1.25 3.7219
Transfer Total	161.09	4.9719
Relaxation Shrinkage Creep	32.4 162 112.41	1 5 3.4695
Long-term Total	306.81	9.4695
All Losses	467.9	14.441

Losses - Long term

Initial force 3240 kN
Final force Pf=P0-loftl=2772.1 kN
Unit-weight of in-situ concrete wc=23.5 kN/m³

Loading	Final Stresses N/mm²		
	Top of Beam	Bottom of Beam	Centroid of Strands
Prestress	-0.88695	8.2175	6.2882
Self weight of Beam	6.0037	-4.9735	-2.6473
In-situ concrete	3.7135	-3.0763	-1.6375
Total	8.8303	0.16775	2.0034

Beam concrete stresses - Long term

Composite section

Height from beam soffit to
bottom of in-situ concrete hsis=1380 mm
Perc'age of shrinkage remaining ps=45 %
Percentage pcr=45 %
Percentage stT=50 %
The net moment is Mc=F*e/1E3-Mb=411.5 kNm
Stress at top of in-situ concrete:
ftisds=-(F/(Ai*mr)-F/(Ai*mr+Ac)-Mc*1E3*(di-Yc)/Ic)*mr*1E3
=1.1307 N/mm²
Stress at bottom of in-situ concrete:
fbisds=-(F/(Ai*mr)-F/(Ai*mr+Ac)-Mc*1E3*(hsis-Yc)/Ic)*mr*1E3
=0.80381 N/mm²
Stress at top of precast concrete beam:
ftpbds=(F/(Ai*mr+Ac)+Mc*1E3*(d-Yc)/Ic+Mb*1E3*Yt/Ixx)*1E3
=-2.4914 N/mm²
Stress at bottom of precast concrete beam:
fbpbds=(F/(Ai*mr+Ac)-Mc*1E3*Yc/Ic-Mb*1E3*Yb/Ixx)*1E3=0.96305 N/mm²

Combination 1 loading

Applied bending moment c1b(1)=1000 kNm

Loading	Combination 1 Stresses N/mm²			
	Top of in-situ	Top of Beam	Bottom of in-situ	Bottom of Beam
Prestress,beam and in-situ.	0	8.8303	0	0.16775
Dif. shrinkage	1.1307	-2.4914	0.80381	0.96305
Combination 1	2.1424	1.5291	1.2685	-2.8831
Total	3.2731	7.8681	2.0723	-1.7523

Combination 1 Loading - Stresses

WARNING:
Bottom of beam:
Tensile stress 1.7523 N/mm² exceeds maximum allowable tensile stress of 0 N/mm².

Combination 2 to 5 loading

Applied bending moment c2b(1)=1250 kNm

Loading	Combination 2 to 5 Stresses N/mm²			
	Top of in-situ	Top of Beam	Bottom of in-situ	Bottom of Beam
Prestress,beam and in-situ	0	8.8303	0	0.16775
Dif. shrinkage	1.1307	-2.4914	0.80381	0.96305
Combination 2-5	2.4345	1.7376	1.4414	-3.6039
Total	3.5653	8.0766	2.2452	-2.4731

Combination 2 to 5 Loading - Stresses

Combination 3 loading. The stresses from the Proforma for temperature differences should be added to the total stresses.

Top of in-situ concrete:
Compressive stress 3.5653 N/mm² is less than the maximum allowable stress of 0.5*fcuc=17.5 N/mm².
Top of beam:
Compressive stress 8.0766 N/mm² is less than the maximum allowable stress of 0.4*fcu=20 N/mm².
Bottom of in-situ concrete:
Compressive stress 2.2452 N/mm² is less than the maximum allowable stress of 0.5*fcuc=17.5 N/mm².
Bottom of beam:
Tensile stress 2.4731 N/mm² is less than the maximum allowable tensile stress of 3.182 N/mm².

Location: Ex3 - 15 metre span U3 beam

Precast prestressed concrete U beams with in-situ top slab

Calculations for stresses at the Serviceability Limit State (SLS) to BS5400-4:1990 implemented by DOT Departmental Standard BD 44/15.

Span of beam span=15 m

Beam U 3 section properties

Depth of beam d=900 mm
Cross-sectional area Ac=510457 mm²
Centroid above soffit Yb=398.4 mm
Section modulus top Zt=84.39E6 mm³
Section modulus bottom Zb=106.27E6 mm³
Unit weight of beam uwb=25 kN/m³

Concrete strengths

Strength at transfer fci=35 N/mm²
Characteristic strength fcu=40 N/mm²

Concrete moduli

Modulus of elasticity at transfer for concrete strength 35 N/mm² is:
Eci=29.5 kN/mm²
Modulus of elasticity for concrete strength 40 N/mm² is:
Ecb=31 kN/mm²

Composite section properties

Char strength (in-situ concrete) fcuc=35 N/mm²
Modulus of elasticity for concrete strength 35 N/mm² is:
Ecc=29.5 kN/mm²

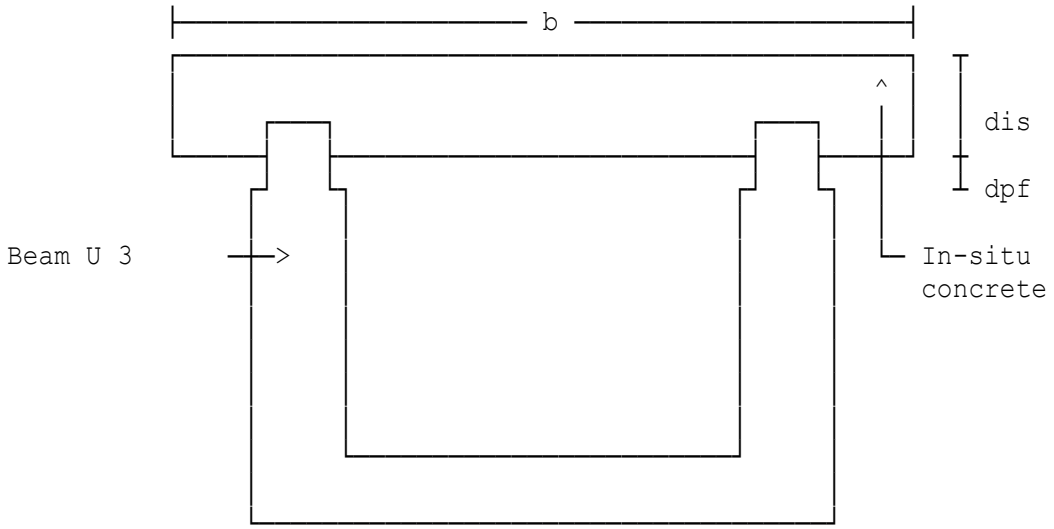

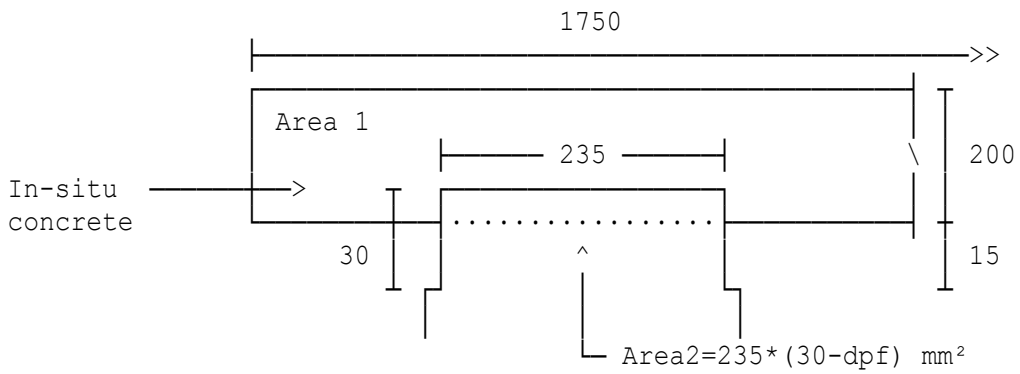

Second moment of area:

Depth of composite section	di=1085 mm
Initial force per strand	if=150 kN
Modulus of elasticity	Es=200 kN/mm²

Cross-section 1

Distance from mid-span of beam	csd(1)=2.4 m
Number of layers of strand	nls(1)=4
Height above soffit	ds(1)=50 mm
Number of strands	ns(1)=10

WARNING:
Strand location is non-standard.

Height above soffit	ds(2)=105 mm
Number of strands	ns(2)=10

WARNING:
Strand location is non-standard.

Height above soffit	ds(3)=490 mm
Number of strands	ns(3)=4

WARNING:
Strand location is non-standard.

Height above soffit	ds(4)=790 mm
Number of strands	ns(4)=4

WARNING:
Strand location is non-standard.

Bending moment from temp.loads	tlb(1)=600 kNm
Bending moment from other loads	olb(1)=400 kNm

Short Term Losses

Relaxation at transfer (%)	str=0.75

Summary

Loss	Loss of Force kN	% Loss
Relaxation	31.5	0.75
Elastic Shortening	304.47	7.2492
Transfer Total	335.97	7.9992

Losses at Transfer

Initial force 4200 kN
Force at transfer Pt=P0-loft=3864 kN

Loading	Stresses at Transfer N/mm²		
	Top of Beam	Bottom of Beam	Centroid of Strands
Prestress	0.23658	13.394	9.9116
Self weight of Beam	3.8168	-3.0315	-1.2189
Temporary Loads	7.1085	-5.646	-2.2701
Other Loads	4.739	-3.764	-1.5134
Total	15.901	0.95265	4.9092

Beam Concrete Stresses at Transfer

Stress Limitations

Top of beam:
Compressive stress 15.901 N/mm² is less than allowable stresses of 0.5*fci=17.5 N/mm² and 0.4*fcu=16 N/mm².
Bottom of beam:
Compressive stress 0.95265 N/mm² is less than allowable stresses of 0.5*fci=17.5 N/mm² and 0.4*fcu=16 N/mm².

Long Term Losses

Relaxation after transfer(%) slr(1)=0.5
Shrinkage per unit length sul(1)=0.3E-3

Summary

Loss	Loss of Force kN	% Loss
Relaxation Elastic Shortening	31.5 304.47	0.75 7.2492
Transfer Total	335.97	7.9992
Relaxation Shrinkage Creep	21 252 330.82	0.5 6 7.8767
Long-term Total	603.82	14.377
All Losses	939.79	22.376

Losses - Long term

Initial force 4200 kN
Final force Pf=P0-loftl=3260.2 kN
Unit-weight of in-situ concrete wc=24.5 kN/m³

Loading	Final Stresses N/mm²		
	Top of Beam	Bottom of Beam	Centroid of Strands
Prestress Self weight of Beam In-situ concrete	0.19961 3.8168 2.513	11.301 -3.0315 -1.996	8.3627 -1.2189 -0.80254
Total	6.5295	6.2736	6.3413

Beam concrete stresses - Long term

Composite section

Height from beam soffit to
bottom of in-situ concrete hsis=865 mm
Perc'age of shrinkage remaining ps=40 %
Percentage pcr=40 %
Percentage stT=67 %
The net moment is Mc=F*e/1E3-Mb=-195.23 kNm
Stress at top of in-situ concrete:
ftisds=-(F/(Ai*mr)-F/(Ai*mr+Ac)-Mc*1E3*(di-Yc)/Ic)*mr*1E3
=0.14148 N/mm²
Stress at bottom of in-situ concrete:
fbisds=-(F/(Ai*mr)-F/(Ai*mr+Ac)-Mc*1E3*(hsis-Yc)/Ic)*mr*1E3
=0.51663 N/mm²
Stress at top of precast concrete beam:

ftpbds=(F/(Ai*mr+Ac)+Mc*1E3*(d-Yc)/Ic+Mb*1E3*Yt/Ixx)*1E3
=-0.9234 N/mm²

Stress at bottom of precast concrete beam:
fbpbds=(F/(Ai*mr+Ac)-Mc*1E3*Yc/Ic-Mb*1E3*Yb/Ixx)*1E3=0.36122 N/mm²

Combination 1 loading

Applied bending moment c1b(1)=1500 kNm

Loading	Combination 1 Stresses N/mm²			
	Top of in-situ	Top of Beam	Bottom of in-situ	Bottom of Beam
Prestress,beam and in-situ.	0	6.5295	0	6.2736
Dif. shrinkage	0.14148	-0.9234	0.51663	0.36122
Combination 1	6.8801	4.0523	3.5173	-8.3183
Total	7.0216	9.6584	4.0339	-1.6835

Combination 1 Loading - Stresses

WARNING:
Bottom of beam:
Tensile stress 1.6835 N/mm² exceeds maximum allowable tensile stress of 0 N/mm².

Combination 2 to 5 loading

Applied bending moment c2b(1)=2500 kNm

Loading	Combination 2 to 5 Stresses N/mm²			
	Top of in-situ	Top of Beam	Bottom of in-situ	Bottom of Beam
Prestress,beam and in-situ	0	6.5295	0	6.2736
Dif. shrinkage	0.14148	-0.9234	0.51663	0.36122
Combination 2-5	9.8287	5.789	5.0247	-13.864
Total	9.9702	11.395	5.5413	-7.2291

Combination 2 to 5 Loading - Stresses

Combination 3 loading. The stresses from the Proforma for temperature differences should be added to the total stresses.

Top of in-situ concrete:
Compressive stress 9.9702 N/mm² is less than the maximum allowable stress of 0.5*fcuc=17.5 N/mm².

Top of beam:
Compressive stress 11.395 N/mm² is less than the maximum allowable stress of 0.4*fcu=16 N/mm².
Bottom of in-situ concrete:
Compressive stress 5.5413 N/mm² is less than the maximum allowable stress of 0.5*fcuc=17.5 N/mm².

WARNING:
Bottom of beam:
Tensile stress 7.2291 N/mm² exceeds maximum allowable tensile stress of 2.846 N/mm².

Location: Ex1 - 20 metre span U beam

Precast prestressed concrete U beams with in-situ top slab

Calculations for stresses at the Serviceability Limit State (SLS) in accordance with BS EN 1992-2:2005 and NA to BS EN 1992-2:2005.

Beam span under consideration span=20 m

Beam U 7 section properties

Depth of beam	d=1100 mm
Cross-sectional area	Ac=577217 mm²
Centroid above soffit	Yb=491.7 mm
Section modulus top	Zt=121.93E6 mm³
Section modulus bottom	Zb=150.83E6 mm³
Unit weight of beam	uwb=24 kN/m³

Concrete compressive strengths

Characteristic cylinder strength	fcki=32 N/mm² (transfer)
Characteristic cylinder strength	fck=40 N/mm²

Concrete moduli (short-term)

Concrete modulus of elasticity	Ecmi=33 kN/mm² (transfer)
Concrete modulus of elasticity	Ecmb=35 kN/mm²

Composite section properties

Char strength (in-situ concrete)	fckc=32 N/mm²
Short-term modulus of elasticity for in-situ concrete	Ecmc=33 kN/mm²

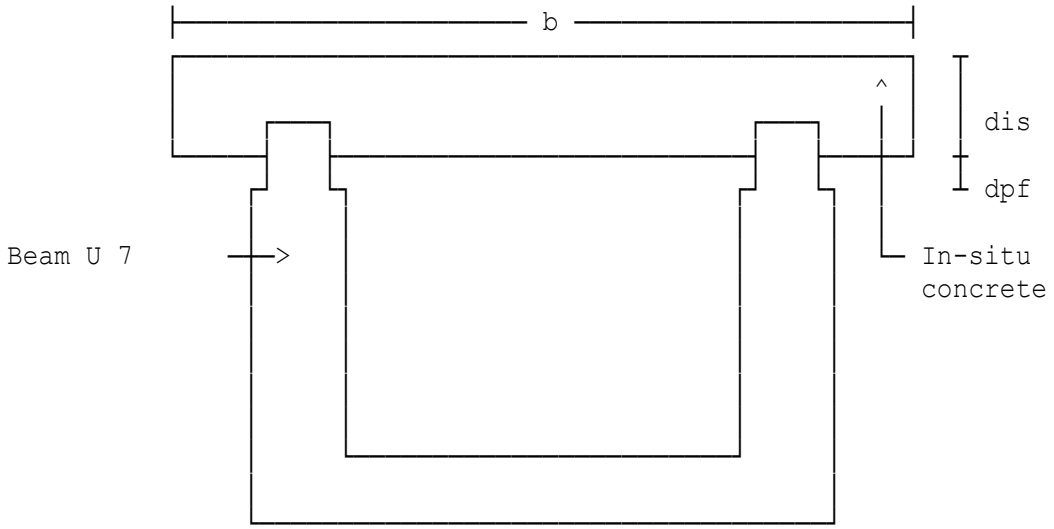

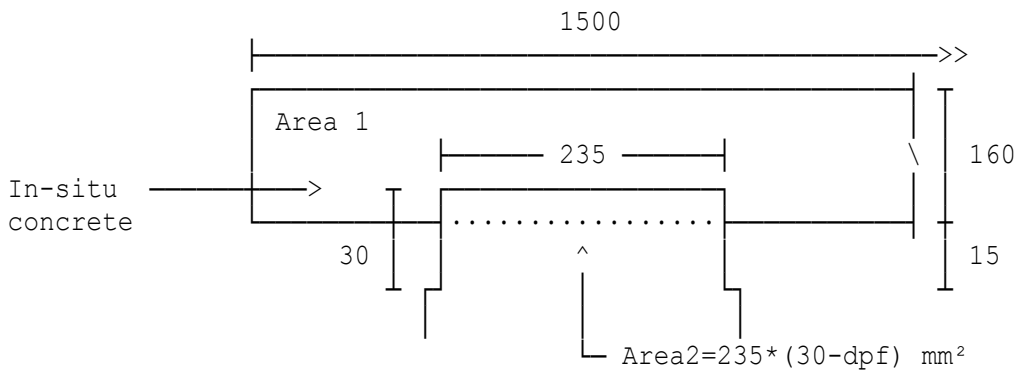

Second moment of area:
Depth of composite section di=1245 mm
Modulus of elasticity (strand) Ep=195 kN/mm²

Cross-section 1

Distance from mid-span of beam csd(1)=0 m
Number of layers of strand nls(1)=4
Height above soffit ds(1)=60 mm
Number of strands ns(1)=14
Height above soffit ds(2)=110 mm
Number of strands ns(2)=12
Height above soffit ds(3)=700 mm
Number of strands ns(3)=4
Height above soffit ds(4)=1000 mm
Number of strands ns(4)=4

Short Term Losses (BS EN 1992-1-1)

Relaxation at transfer (%) str=1

Summary

Loss	Loss of Force kN	% Loss
Relaxation	59.16	1
Elastic Shortening	372.83	6.3021
Transfer Total	431.99	7.3021

Losses at Transfer

Initial force 5916 kN
Force at transfer Pt=P0-loft=5484 kN

Loading	Stresses at Transfer N/mm²		
	Top of Beam	Bottom of Beam	Centroid of Strands
Prestress Self weight of Beam	-0.76254 5.6813	17.797 -4.5923	13.35 -2.131
Total	4.9188	13.204	11.219

Beam Concrete Stresses at Transfer

Stress Limitations(BS EN 1992-1-1, Clause 5.10.2.2)

Top of beam:
Compressive stress 4.9188 N/mm² is less than allowable stresses of 0.7*fcki=22.4 N/mm² and 0.6*fck=24 N/mm².
Bottom of beam:
Compressive stress 13.204 N/mm² is less than allowable stresses of 0.7*fcki=22.4 N/mm² and 0.6*fck=24 N/mm².

Long Term Losses (BS EN 1992-1-1, Clause 5.10.6(1))

Relaxation after transfer(%) slr(1)=2
Shrinkage per unit length sul(1)=0.3E-3
Creep coefficient φ(∞,to) crf=2

Summary

Loss	Loss of Force kN	% Loss
Relaxation Elastic Shortening	59.16 372.83	1 6.3021
Transfer Total	431.99	7.3021
Relaxation Shrinkage Creep	118.32 276.47 590.83	2 4.6733 9.987
Long-term Total	985.62	16.66
All Losses	1417.6	23.962

Losses - Long term

Initial force 5916 kN
Final force Pf=P0-loftl=4498.4 kN
Unit-weight of in-situ concrete wc=24 kN/m³

Loading	Final Stresses N/mm²		
	Top of Beam	Bottom of Beam	Centroid of Strands
Prestress	-0.62549	14.598	10.951
Self weight of Beam	5.6813	-4.5923	-2.131
In-situ concrete	2.2928	-1.8533	-0.86003
Total	7.3487	8.1526	7.96

Beam concrete stresses - Long term

Composite section

Height from beam soffit to
bottom of in-situ concrete hsis=1065 mm
Perc'age of shrinkage remaining ps=25 %
Percentage pcr=25 %
Percentage stT=67 %
The net moment is Mc=F*e/1E3-Mb=-77.531 kNm
Stress at top of in-situ concrete:
ftisds=-(F/(Ai*mr)-F/(Ai*mr+Ac)-Mc*1E3*(di-Yc)/Ic)*mr*1E3
=-0.15054 N/mm²
Stress at bottom of in-situ concrete:
fbisds=-(F/(Ai*mr)-F/(Ai*mr+Ac)-Mc*1E3*(hsis-Yc)/Ic)*mr*1E3
=-0.057735 N/mm²
Stress at top of precast concrete beam:
ftpbds=(F/(Ai*mr+Ac)+Mc*1E3*(d-Yc)/Ic+Mb*1E3*Yt/Iyy)*1E3
=0.18909 N/mm²
Stress at bottom of precast concrete beam:
fbpbds=(F/(Ai*mr+Ac)-Mc*1E3*Yc/Ic-Mb*1E3*Yb/Iyy)*1E3
=-0.072259 N/mm²

Loading Combination 1

(no tensile stress permitted in precast beam)
Characteristic bending moment c1b(1)=1440 kNm

Loading	Loading Combination 1 Stresses N/mm²			
	Top of in-situ	Top of Beam	Bottom of in-situ	Bottom of Beam
Prestress,beam and in-situ.	0	7.3487	0	8.1526
Dif. shrinkage	-0.15054	0.18909	-0.057735	-0.072259
Combination 1	7.715	5.714	5.231	-6.5688
Total	7.5644	13.252	5.1733	1.5115

Loading Combination 1 - Stresses

Loading Combination 2

(tensile stress permitted (no visible cracking))
Characteristic bending moment c2b(1)=1907 kNm

Loading	Loading Combination 2 Stresses N/mm²			
	Top of in-situ	Top of Beam	Bottom of in-situ	Bottom of Beam
Prestress,beam and in-situ	0	7.3487	0	8.1526
Dif. shrinkage	-0.15054	0.18909	-0.057735	-0.072259
Combination 2	7.0903	5.2514	4.8075	-8.6991
Total	6.9398	12.789	4.7498	-0.6188

Loading Combination 2 - Stresses

NOTE: The stresses from temperature differences should be added to the total stresses.

Top of in-situ concrete:
Compressive stress 6.9398 N/mm² is less than the maximum allowable stress of 0.6*fckc=19.2 N/mm².
Top of beam:
Compressive stress 12.789 N/mm² is less than the maximum allowable stress of 0.6*fck=24 N/mm².
Bottom of in-situ concrete:
Compressive stress 4.7498 N/mm² is less than the maximum allowable stress of 0.6*fckc=19.2 N/mm².
Bottom of beam:
Tensile stress 0.6188 N/mm² is less than the maximum allowable tensile stress of 3.0263 N/mm².

Location: Ex2 - 25 metre span U10 beam

Precast prestressed concrete U beams with in-situ top slab

Calculations for stresses at the Serviceability Limit State (SLS) in accordance with BS EN 1992-2:2005 and NA to BS EN 1992-2:2005.

Beam span under consideration span=25 m

Beam U 10 section properties

Depth of beam	d=1400 mm
Cross-sectional area	Ac=677357 mm²
Centroid above soffit	Yb=634.3 mm
Section modulus top	Zt=187.93E6 mm³
Section modulus bottom	Zb=226.9E6 mm³
Unit weight of beam	uwb=24.5 kN/m³

Concrete compressive strengths

Characteristic cylinder strength	fcki=36 N/mm² (transfer)
Characteristic cylinder strength	fck=40 N/mm²

Concrete moduli (short-term)

Concrete modulus of elasticity	Ecmi=33 kN/mm² (transfer)
Concrete modulus of elasticity	Ecmb=35 kN/mm²

Composite section properties

Char strength (in-situ concrete)	fckc=28 N/mm²
Short-term modulus of elasticity for in-situ concrete	Ecmc=34 kN/mm²

Item No. 1

Item weighting	iw1=0.97143
X co-ordinate	X(1)=0 mm
Y co-ordinate	Y(1)=1380 mm
X co-ordinate	X(2)=370 mm
Y co-ordinate	Y(2)=1380 mm
X co-ordinate	X(3)=370 mm
Y co-ordinate	Y(3)=1400 mm
X co-ordinate	X(4)=605 mm
Y co-ordinate	Y(4)=1400 mm
X co-ordinate	X(5)=605 mm
Y co-ordinate	Y(5)=1380 mm
X co-ordinate	X(6)=1246 mm
Y co-ordinate	Y(6)=1380 mm
X co-ordinate	X(7)=1246 mm
Y co-ordinate	Y(7)=1400 mm
X co-ordinate	X(8)=1481 mm
Y co-ordinate	Y(8)=1400 mm
X co-ordinate	X(9)=1481 mm

Y co-ordinate	Y(9)=1380 mm
X co-ordinate	X(10)=1981 mm
Y co-ordinate	Y(10)=1380 mm
X co-ordinate	X(11)=1981 mm
Y co-ordinate	Y(11)=1680 mm
X co-ordinate	X(12)=1481 mm
Y co-ordinate	Y(12)=1680 mm
X co-ordinate	X(13)=1481 mm
Y co-ordinate	Y(13)=1580 mm
X co-ordinate	X(14)=0 mm
Y co-ordinate	Y(14)=1580 mm
X co-ordinate	X(15)=0 mm
Y co-ordinate	Y(15)=1380 mm

Item No. 2

Second moment of area	IXX2=143.92E9 mm^4
Area of item	A2=677357 mm^2
Centroid above soffit	YC2=634.3 mm
Item weighting	iw2=1
Depth of composite section	di=1680 mm
Modulus of elasticity (strand)	Ep=195 kN/mm^2

Cross-section 1

Distance from mid-span of beam	csd(1)=4.5 m
Number of layers of strand	nls(1)=4
Height above soffit	ds(1)=60 mm
Number of strands	ns(1)=16
Height above soffit	ds(2)=110 mm
Number of strands	ns(2)=12
Height above soffit	ds(3)=800 mm
Number of strands	ns(3)=4
Height above soffit	ds(4)=1300 mm
Number of strands	ns(4)=4

Short Term Losses (BS EN 1992-1-1)

Relaxation at transfer (%)	str=1.25

Summary

Loss	Loss of Force kN	% Loss
Relaxation	40.5	1.25
Elastic Shortening	111.75	3.4491
Transfer Total	152.25	4.6991

Losses at Transfer

Initial force	3240 kN
Force at transfer	Pt=P0-loft=3087.8 kN

Loading	Stresses at Transfer N/mm²		
	Top of Beam	Bottom of Beam	Centroid of Strands
Prestress Self weight of Beam	-0.98795 6.0037	9.1532 -4.9735	7.0042 -2.6473
Total	5.0158	4.1797	4.3569

Beam Concrete Stresses at Transfer

Stress Limitations(BS EN 1992-1-1, Clause 5.10.2.2)

Top of beam:
Compressive stress 5.0158 N/mm² is less than allowable stresses of 0.7*fcki=25.2 N/mm² and 0.6*fck=24 N/mm².
Bottom of beam:
Compressive stress 4.1797 N/mm² is less than allowable stresses of 0.7*fcki=25.2 N/mm² and 0.6*fck=24 N/mm².

Long Term Losses (BS EN 1992-1-1, Clause 5.10.6(1))

Relaxation after transfer(%) slr(1)=1
Shrinkage per unit length sul(1)=0.3E-3
Creep coefficient φ(∞,to) crf=2

Summary

Loss	Loss of Force kN	% Loss
Relaxation Elastic Shortening	40.5 111.75	1.25 3.4491
Transfer Total	152.25	4.6991
Relaxation Shrinkage Creep	32.4 157.95 131.08	1 4.875 4.0457
Long-term Total	321.43	9.9207
All Losses	473.68	14.62

Losses - Long term

Initial force 3240 kN
Final force Pf=P0-loftl=2766.3 kN
Unit-weight of in-situ concrete wc=23.5 kN/m³

Loading	Final Stresses N/mm²		
	Top of Beam	Bottom of Beam	Centroid of Strands
Prestress	-0.8851	8.2004	6.2751
Self weight of Beam	6.0037	-4.9735	-2.6473
In-situ concrete	3.7135	-3.0763	-1.6375
Total	8.8322	0.15062	1.9903

Beam concrete stresses - Long term

Composite section

Height from beam soffit to
bottom of in-situ concrete hsis=1380 mm
Perc'age of shrinkage remaining ps=45 %
Percentage pcr=45 %
Percentage stT=50 %
The net moment is Mc=F*e/1E3-Mb=385.6 kNm
Stress at top of in-situ concrete:
ftisds=-(F/(Ai*mr)-F/(Ai*mr+Ac)-Mc*1E3*(di-Yc)/Ic)*mr*1E3
=1.499 N/mm²
Stress at bottom of in-situ concrete:
fbisds=-(F/(Ai*mr)-F/(Ai*mr+Ac)-Mc*1E3*(hsis-Yc)/Ic)*mr*1E3
=1.1696 N/mm²
Stress at top of precast concrete beam:
ftpbds=(F/(Ai*mr+Ac)+Mc*1E3*(d-Yc)/Ic+Mb*1E3*Yt/Iyy)*1E3
=-3.4651 N/mm²
Stress at bottom of precast concrete beam:
fbpbds=(F/(Ai*mr+Ac)-Mc*1E3*Yc/Ic-Mb*1E3*Yb/Iyy)*1E3=1.3372 N/mm²

Loading Combination 1

(no tensile stress permitted in precast beam)
Characteristic bending moment c1b(1)=1000 kNm

Loading	Loading Combination 1 Stresses N/mm²			
	Top of in-situ	Top of Beam	Bottom of in-situ	Bottom of Beam
Prestress,beam and in-situ.	0	8.8322	0	0.15062
Dif. shrinkage	1.499	-3.4651	1.1696	1.3372
Combination 1	2.2316	1.3946	1.2921	-2.835
Total	3.7306	6.7617	2.4618	-1.3472

Loading Combination 1 - Stresses

WARNING:
Bottom of beam:
Tensile stress 1.3472 N/mm² exceeds maximum allowable tensile stress of 0 N/mm².

Loading Combination 2

(tensile stress permitted (no visible cracking))
Characteristic bending moment c2b(1)=1250 kNm

Loading	Loading Combination 2 Stresses N/mm²			
	Top of in-situ	Top of Beam	Bottom of in-situ	Bottom of Beam
Prestress,beam and in-situ	0	8.8322	0	0.15062
Dif. shrinkage	1.499	-3.4651	1.1696	1.3372
Combination 2	2.5359	1.5848	1.4683	-3.5438
Total	4.0349	6.9519	2.638	-2.056

Loading Combination 2 - Stresses

NOTE: The stresses from temperature differences should be added to the total stresses.

Top of in-situ concrete:
Compressive stress 4.0349 N/mm² is less than the maximum allowable stress of 0.6*fckc=16.8 N/mm².
Top of beam:
Compressive stress 6.9519 N/mm² is less than the maximum allowable stress of 0.6*fck=24 N/mm².
Bottom of in-situ concrete:
Compressive stress 2.638 N/mm² is less than the maximum allowable stress of 0.6*fckc=16.8 N/mm².
Bottom of beam:
Tensile stress 2.056 N/mm² is less than the maximum allowable tensile stress of 3.0263 N/mm².

Location: Ex3 - 15 metre span U3 beam

Precast prestressed concrete U beams with in-situ top slab

Calculations for stresses at the Serviceability Limit State (SLS) in accordance with BS EN 1992-2:2005 and NA to BS EN 1992-2:2005.

Beam span under consideration span=15 m

Beam U 3 section properties

Depth of beam	d=900 mm
Cross-sectional area	Ac=510457 mm²
Centroid above soffit	Yb=398.4 mm
Section modulus top	Zt=84.39E6 mm³
Section modulus bottom	Zb=106.27E6 mm³
Unit weight of beam	uwb=25 kN/m³

Concrete compressive strengths

Characteristic cylinder strength	fcki=28 N/mm² (transfer)
Characteristic cylinder strength	fck=32 N/mm²

Concrete moduli (short-term)

Concrete modulus of elasticity	Ecmi=32 kN/mm² (transfer)
Concrete modulus of elasticity	Ecmb=33 kN/mm²

Composite section properties

Char strength (in-situ concrete)	fckc=28 N/mm²
Short-term modulus of elasticity for in-situ concrete	Ecmc=32 kN/mm²

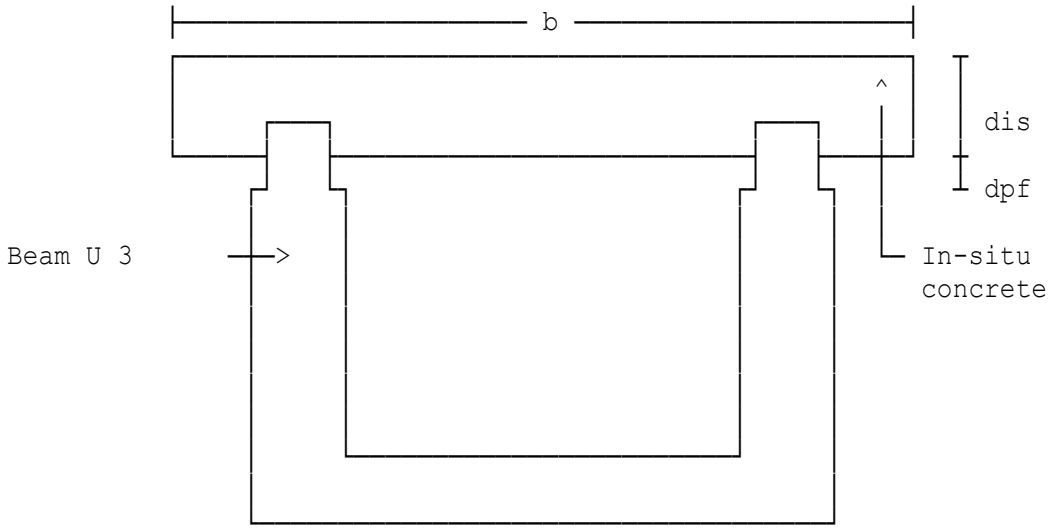

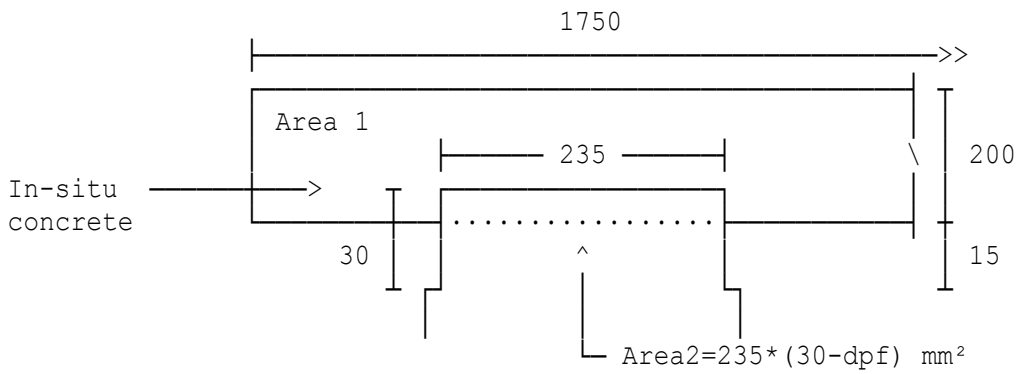

Second moment of area:
Depth of composite section di=1085 mm
Modulus of elasticity (strand) Ep=195 kN/mm²

Cross-section 1

Distance from mid-span of beam csd(1)=2.4 m
Number of layers of strand nls(1)=4
Height above soffit ds(1)=50 mm
Number of strands ns(1)=10

WARNING:
Strand location is non-standard.

Height above soffit ds(2)=105 mm
Number of strands ns(2)=10

WARNING:
Strand location is non-standard.

Height above soffit ds(3)=490 mm
Number of strands ns(3)=4

WARNING:
Strand location is non-standard.

Height above soffit ds(4)=790 mm
Number of strands ns(4)=4

WARNING:
Strand location is non-standard.

Bending moment from temp.loads tlb(1)=600 kNm
Bending moment from other loads olb(1)=400 kNm

Short Term Losses (BS EN 1992-1-1)

Relaxation at transfer (%) str=0.75

Summary

Loss	Loss of Force kN	% Loss
Relaxation	31.5	0.75
Elastic Shortening	256.8	6.1144
Transfer Total	288.3	6.8644

Losses at Transfer

Initial force 4200 kN
Force at transfer Pt=P0-loft=3911.7 kN

Loading	Stresses at Transfer N/mm²		
	Top of Beam	Bottom of Beam	Centroid of Strands
Prestress	0.23949	13.559	10.034
Self weight of Beam	3.8168	-3.0315	-1.2189
Temporary Loads	7.1085	-5.646	-2.2701
Other Loads	4.739	-3.764	-1.5134
Total	15.904	1.1179	5.0315

Beam Concrete Stresses at Transfer

Stress Limitations(BS EN 1992-1-1, Clause 5.10.2.2)

Top of beam:
Compressive stress 15.904 N/mm² is less than allowable stresses of 0.7*fcki=19.6 N/mm² and 0.6*fck=19.2 N/mm².
Bottom of beam:
Compressive stress 1.1179 N/mm² is less than allowable stresses of 0.7*fcki=19.6 N/mm² and 0.6*fck=19.2 N/mm².

Long Term Losses (BS EN 1992-1-1, Clause 5.10.6(1))

Relaxation after transfer(%) slr(1)=0.5
Shrinkage per unit length sul(1)=0.3E-3
Creep coefficient φ(∞,to) crf=2

Summary

Loss	Loss of Force kN	% Loss
Relaxation Elastic Shortening	31.5 256.8	0.75 6.1144
Transfer Total	288.3	6.8644
Relaxation Shrinkage Creep	21 245.7 362.42	0.5 5.85 8.6291
Long-term Total	629.12	14.979
All Losses	917.43	21.843

Losses - Long term

Initial force 4200 kN
Final force Pf=P0-loftl=3282.6 kN
Unit-weight of in-situ concrete wc=24.5 kN/m³

Loading	Final Stresses N/mm²		
	Top of Beam	Bottom of Beam	Centroid of Strands
Prestress Self weight of Beam In-situ concrete	0.20098 3.8168 2.513	11.379 -3.0315 -1.996	8.4201 -1.2189 -0.80254
Total	6.5308	6.3511	6.3987

Beam concrete stresses - Long term

Composite section

Height from beam soffit to
bottom of in-situ concrete hsis=865 mm
Perc'age of shrinkage remaining ps=40 %
Percentage pcr=40 %
Percentage stT=67 %
The net moment is Mc=F*e/1E3-Mb=-272.88 kNm
Stress at top of in-situ concrete:
ftisds=-(F/(Ai*mr)-F/(Ai*mr+Ac)-Mc*1E3*(di-Yc)/Ic)*mr*1E3
=0.1937 N/mm²
Stress at bottom of in-situ concrete:
fbisds=-(F/(Ai*mr)-F/(Ai*mr+Ac)-Mc*1E3*(hsis-Yc)/Ic)*mr*1E3
=0.71806 N/mm²
Stress at top of precast concrete beam:

ftpbds=(F/(Ai*mr+Ac)+Mc*1E3*(d-Yc)/Ic+Mb*1E3*Yt/Iyy)*1E3
=-1.2783 N/mm²

Stress at bottom of precast concrete beam:

fbpbds=(F/(Ai*mr+Ac)-Mc*1E3*Yc/Ic-Mb*1E3*Yb/Iyy)*1E3
=0.49992 N/mm²

Loading Combination 1

(no tensile stress permitted in precast beam)
Characteristic bending moment c1b(1)=1500 kNm

Loading	Loading Combination 1 Stresses N/mm²			
	Top of in-situ	Top of Beam	Bottom of in-situ	Bottom of Beam
Prestress,beam and in-situ.	0	6.5308	0	6.3511
Dif. shrinkage	0.1937	-1.2783	0.71806	0.49992
Combination 1	6.8801	4.0523	3.5173	-8.3183
Total	7.0738	9.3048	4.2353	-1.4673

Loading Combination 1 - Stresses

WARNING:
Bottom of beam:
Tensile stress 1.4673 N/mm² exceeds maximum allowable tensile stress of 0 N/mm².

Loading Combination 2

(tensile stress permitted (no visible cracking))
Characteristic bending moment c2b(1)=2500 kNm

Loading	Loading Combination 2 Stresses N/mm²			
	Top of in-situ	Top of Beam	Bottom of in-situ	Bottom of Beam
Prestress,beam and in-situ	0	6.5308	0	6.3511
Dif. shrinkage	0.1937	-1.2783	0.71806	0.49992
Combination 2	9.8287	5.789	5.0247	-13.864
Total	10.022	11.042	5.7427	-7.0129

Loading Combination 2 - Stresses

NOTE: The stresses from temperature differences should be added to the total stresses.

Top of in-situ concrete:
Compressive stress 10.022 N/mm² is less than the maximum allowable

stress of 0.6*fckc=16.8 N/mm².
Top of beam:
Compressive stress 11.042 N/mm² is less than the maximum allowable stress of 0.6*fck=19.2 N/mm².
Bottom of in-situ concrete:
Compressive stress 5.7427 N/mm² is less than the maximum allowable stress of 0.6*fckc=16.8 N/mm².

WARNING:
Bottom of beam:
Tensile stress 7.0129 N/mm² exceeds maximum allowable tensile stress of 2.8534 N/mm².

Location: Ex1 - 20 metre span wide box beam

Precast prestressed concrete Wide Box Beams

Calculations for stresses at the Serviceability Limit State (SLS) to BS5400-4:1990 implemented by DOT Departmental Standard BD 44/15.

Span of beam span=20 m

Beam WB 7 section properties

Depth of beam d=960 mm
Cross-sectional area Ac=547245 mm²
Centroid above soffit Yb=475 mm
Section modulus top Zt=137.42E6 mm³
Section modulus bottom Zb=140.61E6 mm³
Unit weight of beam uwb=25 kN/m³

Concrete strengths

Strength at transfer fci=40 N/mm²
Characteristic strength fcu=50 N/mm²

Concrete moduli

Modulus of elasticity at transfer for concrete strength 40 N/mm² is:
Eci=31 kN/mm²
Modulus of elasticity for concrete strength 50 N/mm² is:
Ecb=34 kN/mm²

Composite section properties

Depth of in-situ concrete disc=480 mm
Char strength of in-situ concrete fcuc=30 N/mm²
Modulus of elasticity for concrete strength 30 N/mm² is:
Ecc=28 kN/mm²
Breadth of section b=1280 mm
Initial force per strand if=225 kN
Modulus of elasticity Es=200 kN/mm²

Cross-section 1

Distance from mid-span of beam csd(1)=0 m
Number of layers of strand nls(1)=4
Height from soffit ds(1)=65 mm
Number of strands ns(1)=16
Height from soffit ds(2)=115 mm
Number of strands ns(2)=8
Height from soffit ds(3)=700 mm
Number of strands ns(3)=2
Height from soffit ds(4)=900 mm
Number of strands ns(4)=2

Short Term Losses

Relaxation at transfer (%) str=1

Summary

Loss	Loss of Force kN	% Loss
Relaxation Elastic Shortening	63 574.95	1 9.1261
Transfer Total	637.95	10.126

Losses at Transfer

Initial force 6300 kN
Force at transfer Pt=P0-loft=5662.1 kN

Loading	Stresses at Transfer N/mm²		
	Top of Beam	Bottom of Beam	Centroid of Strands
Prestress Self weight of Beam	-1.6064 4.9673	22.053 -4.8649	17.511 -2.9775
Total	3.3609	17.188	14.534

Beam Concrete Stresses at Transfer

Stress Limitations

Top of beam:
Compressive stress 3.3609 N/mm² is less than allowable stresses of 0.5*fci=20 N/mm² and 0.4*fcu=20 N/mm².
Bottom of beam:
Compressive stress 17.188 N/mm² is less than allowable stresses of 0.5*fci=20 N/mm² and 0.4*fcu=20 N/mm².

Long Term Losses

Relaxation after transfer(%) slr(1)=1.5
Shrinkage per unit length sul(1)=0.3E-3

Summary

Loss	Loss of Force kN	% Loss
Relaxation Elastic Shortening	63 574.95	1 9.1261
Transfer Total	637.95	10.126
Relaxation Shrinkage Creep	94.5 277.2 737.77	1.5 4.4 11.711
Long-term Total	1109.5	17.611
All Losses	1747.4	27.737

Losses - Long term

Initial force 6300 kN
Final force Pf=P0-loftl=4552.6 kN
Unit-weight of in-situ concrete wc=25 kN/m³

Loading	Final Stresses N/mm²		
	Top of Beam	Bottom of Beam	Centroid of Strands
Prestress Self weight of Beam In-situ concrete	-1.2916 4.9673 0.39909	17.732 -4.8649 -0.39086	14.08 -2.9775 -0.23922
Total	4.0748	12.476	10.863

Beam concrete stresses - Long term

Composite section

Height from beam soffit to
bottom of in-situ concrete hsis=d-disc=480 mm
Perc'age of shrinkage remaining ps=25 %
Percentage pcr=25 %
Percentage stT=75 %
The net moment is Mc=F*e/1E3-Mb=-272.51 kNm
Stress at top of in-situ concrete:
ftisds=-(F/(Ai*mr)-F/(Ai*mr+Ac)-Mc*1E3*(d-Yc)/Ic)*mr*1E3
=-1.3033 N/mm²
Stress at bottom of in-situ concrete:
fbisds=-(F/(Ai*mr)-F/(Ai*mr+Ac)-Mc*1E3*(hsis-Yc)/Ic)*mr*1E3
=0.24611 N/mm²
Stress at top of precast concrete beam:

ftpbds=(F/(Ai*mr+Ac)+Mc*1E3*(d-Yc)/Ic+Mb*1E3*Yt/Ixx)*1E3
=0.10361 N/mm²

Stress at bottom of precast concrete beam:
fbpbds=(F/(Ai*mr+Ac)-Mc*1E3*Yc/Ic-Mb*1E3*Yb/Ixx)*1E3=-0.017406 N/mm²

Combination 1 loading

Applied bending moment c1b(1)=1500 kNm

Loading	Combination 1 Stresses N/mm²			
	Top of in-situ	Top of Beam	Bottom of in-situ	Bottom of Beam
Prestress,beam and in-situ	0	4.0748	0	12.476
Dif. shrinkage	-1.3033	0.10361	0.24611	-0.017406
Combination 1	9.4603	11.488	-0.18131	-10.576
Total	8.157	15.666	0.064798	1.8821

Combination 1 Loading - Stresses

Combination 2 to 5 loading

Applied bending moment c2b(1)=2000 kNm

Loading	Combination 2 to 5 Stresses N/mm²			
	Top of in-situ	Top of Beam	Bottom of in-situ	Bottom of Beam
Prestress,beam and in-situ	0	4.0748	0	12.476
Dif. shrinkage	-1.3033	0.10361	0.24611	-0.017406
Combination 2-5	11.13	13.515	-0.24175	-14.102
Total	9.8264	17.693	0.00436	-1.6434

Combination 2 to 5 Loading - Stresses

Top of in-situ concrete:
Compressive stress 9.8264 N/mm² is less than the maximum allowable stress of 0.5*fcuc=15 N/mm².
Top of beam:
Compressive stress 17.693 N/mm² is less than the maximum allowable stress of 0.4*fcu=20 N/mm².
Bottom of in-situ concrete:
Compressive stress 0.00436 N/mm² is less than the maximum allowable stress of 0.5*fcuc=15 N/mm².
Bottom of beam:
Tensile stress 1.6434 N/mm² is less than the maximum allowable tensile stress of 3.182 N/mm².

Location: Ex2 - 30 metre span wide box beam WB16

Precast prestressed concrete Wide Box Beams

Calculations for stresses at the Serviceability Limit State (SLS) to BS5400-4:1990 implemented by DOT Departmental Standard BD 44/15.

Span of beam span=30 m

Beam WB 16 section properties

Depth of beam d=1460 mm
Cross-sectional area Ac=785520 mm²
Centroid above soffit Yb=696 mm
Section modulus top Zt=277.49E6 mm³
Section modulus bottom Zb=304.68E6 mm³
Unit weight of beam uwb=24.5 kN/m³

Concrete strengths

Strength at transfer fci=35 N/mm²
Characteristic strength fcu=45 N/mm²

Concrete moduli

Modulus of elasticity at transfer for concrete strength 35 N/mm² is:
Eci=29.5 kN/mm²
Modulus of elasticity for concrete strength 45 N/mm² is:
Ecb=32.5 kN/mm²

Composite section properties

Depth of in-situ concrete disc=0 mm
Nominal diameter nomd=12 mm
Nominal tensile strength nomt=1600 N/mm²
Nominal steel area noma=90 mm²
Characteristic breaking load cbl=160 kN
Initial force per strand if=100 kN
Modulus of elasticity Es=200 kN/mm²

Cross-section 1

Distance from mid-span of beam csd(1)=6.7 m
Number of layers of strand nls(1)=6
Height from soffit ds(1)=60 mm
Number of strands ns(1)=18

WARNING:
Strand location is non-standard.

Height from soffit ds(2)=120 mm
Number of strands ns(2)=10

WARNING:
Strand location is non-standard.

Height from soffit ds(3)=1000 mm
Number of strands ns(3)=2
Height from soffit ds(4)=1100 mm
Number of strands ns(4)=2
Height from soffit ds(5)=1200 mm
Number of strands ns(5)=2
Height from soffit ds(6)=1350 mm
Number of strands ns(6)=2
Bending moment from temp.loads tlb(1)=500 kNm
Bending moment from other loads olb(1)=600 kNm

Short Term Losses

Relaxation at transfer (%) str=0.75

Summary

Loss	Loss of Force kN	% Loss
Relaxation Elastic Shortening	27 151.78	0.75 4.216
Transfer Total	178.78	4.966

Losses at Transfer

Initial force 3600 kN
Force at transfer Pt=P0-loft=3421.2 kN

Loading	Stresses at Transfer N/mm²		
	Top of Beam	Bottom of Beam	Centroid of Strands
Prestress Self weight of Beam Temporary Loads Other Loads	-0.25867 6.2441 1.8014 2.1617	8.5587 -5.6884 -1.6411 -1.9693	6.6161 -3.0594 -0.88262 -1.0591
Total	9.9485	-0.73999	1.6149

Beam Concrete Stresses at Transfer

Stress Limitations

Top of beam:
Compressive stress 9.9485 N/mm² is less than allowable stresses of 0.5*fci=17.5 N/mm² and 0.4*fcu=18 N/mm².
Bottom of beam:
The flexural tensile stress of 0.73999 N/mm² at transfer is less than the permissible value of 1 N/mm². Clause 6.3.2.4(b)(1).

Long Term Losses

Relaxation after transfer(%) slr(1)=0.5
Shrinkage per unit length sul(1)=0.3E-3

Summary

Loss	Loss of Force kN	% Loss
Relaxation Elastic Shortening	27 151.78	0.75 4.216
Transfer Total	178.78	4.966
Relaxation Shrinkage Creep	18 194.4 88.781	0.5 5.4 2.4661
Long-term Total	301.18	8.3661
All Losses	479.96	13.332

Losses - Long term

Initial force 3600 kN
Final force Pf=P0-loftl=3120 kN

Loading	Final Stresses N/mm²		
	Top of Beam	Bottom of Beam	Centroid of Strands
Prestress Self weight of Beam	-0.23589 6.2441	7.8053 -5.6884	6.0336 -3.0594
Total	6.0082	2.1169	2.9742

Beam concrete stresses - Long term

Combination 1 loading

Applied bending moment c1b(1)=1000 kNm

Loading	Comb. 1 Stresses N/mm²	
	Top of Beam	Bottom of Beam
Prestress,beam Combination 1	6.0082 4.5035	2.1169 -3.2821
Total	10.512	-1.1652

Combination 1 Loading - Stresses

WARNING:
Bottom of beam
Tensile stress 1.1652 N/mm² exceeds maximum allowable tensile stress of 0 N/mm².

Combination 2 to 5 loading

Applied bending moment c2b(1)=1750 kNm

Loading	Comb. 2-5 Stresses N/mm²	
	Top of Beam	Bottom of Beam
Prestress,beam Combination 2-5	6.0082 6.3049	2.1169 -5.7437
Total	12.313	-3.6268

Combination 2 to 5 Loading - Stresses

Combination 3 loading. The stresses from the Proforma for temperature differences should be added to the total stresses.

Top of beam:
Compressive stress 12.313 N/mm² is less than the maximum allowable stress of 0.4*fcu=18 N/mm².

WARNING:
Bottom of beam:
Tensile stress 3.6268 N/mm² exceeds maximum allowable tensile stress of 3.0187 N/mm².

Location: Ex1 - 20 metre span wide box beam

Precast prestressed concrete Wide Box Beams

Calculations for stresses at the Serviceability Limit State (SLS) in accordance with BS EN 1992-2:2005 and NA to BS EN 1992-2:2005.

Span of beam	span=20 m

Beam WB 7 section properties

Depth of beam	d=960 mm
Cross-sectional area	Ac=547245 mm²
Centroid above soffit	Yb=475 mm
Section modulus top	Zt=137.42E6 mm³
Section modulus bottom	Zb=140.61E6 mm³
Unit weight of beam	uwb=25 kN/m³

Concrete compressive strengths

Characteristic cylinder strength	fcki=32 N/mm² (transfer)
Characteristic cylinder strength	fck=40 N/mm²

Concrete moduli (short-term)

Concrete modulus of elasticity	Ecmi=33 kN/mm² (transfer)
Concrete modulus of elasticity	Ecmb=35 kN/mm²

Composite section properties

Depth of in-situ concrete	disc=480 mm
Char strength (in-situ concrete)	fckc=25 N/mm²
Short-term modulus of elasticity for in-situ concrete	Ecmc=31 kN/mm²
Breadth of section	b=1280 mm
Modulus of elasticity (strand)	Ep=195 kN/mm²

Cross-section 1

Distance from mid-span of beam	csd(1)=0 m
Number of layers of strand	nls(1)=4
Height from soffit	ds(1)=65 mm
Number of strands	ns(1)=16
Height from soffit	ds(2)=115 mm
Number of strands	ns(2)=8
Height from soffit	ds(3)=700 mm
Number of strands	ns(3)=2
Height from soffit	ds(4)=900 mm
Number of strands	ns(4)=2

Short Term Losses (BS EN 1992-1-1)

Relaxation at transfer (%)	str=1

Summary

Loss	Loss of Force kN	% Loss
Relaxation Elastic Shortening	63 485.6	1 7.7079
Transfer Total	548.6	8.7079

Losses at Transfer

Initial force 6300 kN
Force at transfer Pt=P0-loft=5751.4 kN

Loading	Stresses at Transfer N/mm²		
	Top of Beam	Bottom of Beam	Centroid of Strands
Prestress Self weight of Beam	-1.6318 4.9673	22.401 -4.8649	17.787 -2.9775
Total	3.3356	17.536	14.81

Beam Concrete Stresses at Transfer

Stress Limitations (BS EN 1992-1-1, Clause 5.10.2.2)

Top of beam:
Compressive stress 3.3356 N/mm² is less than allowable stresses of 0.7*fcki=22.4 N/mm² and 0.6*fck=24 N/mm².
Bottom of beam:
Compressive stress 17.536 N/mm² is less than allowable stresses of 0.7*fcki=22.4 N/mm² and 0.6*fck=24 N/mm².

Long Term Losses (BS EN 1992-1-1, Clause 5.10.6(1))

Relaxation after transfer(%) slr(1)=1.5
Shrinkage per unit length sul(1)=0.3E-3
Creep coefficient φ(∞,to) crf=1.8

Summary

Loss	Loss of Force kN	% Loss
Relaxation Elastic Shortening	63 485.6	1 7.7079
Transfer Total	548.6	8.7079
Relaxation Shrinkage Creep	94.5 270.27 794.83	1.5 4.29 12.616
Long-term Total	1159.6	18.406
All Losses	1708.2	27.114

Losses - Long term

Initial force 6300 kN
Final force Pf=P0-loftl=4591.8 kN
Unit-weight of in-situ concrete wc=25 kN/m³

Loading	Final Stresses N/mm²		
	Top of Beam	Bottom of Beam	Centroid of Strands
Prestress Self weight of Beam In-situ concrete	-1.3028 4.9673 0.39909	17.884 -4.8649 -0.39086	14.201 -2.9775 -0.23922
Total	4.0637	12.629	10.984

Beam concrete stresses - Long term

Composite section

Height from beam soffit to
bottom of in-situ concrete hsis=d-disc=480 mm
Perc'age of shrinkage remaining ps=25 %
Percentage pcr=25 %
Percentage stT=75 %
The net moment is Mc=F*e/1E3-Mb=-314.12 kNm
Stress at top of in-situ concrete:
ftisds=-(F/(Ai*mr)-F/(Ai*mr+Ac)-Mc*1E3*(d-Yc)/Ic)*mr*1E3
=-1.3445 N/mm²
Stress at bottom of in-situ concrete:
fbisds=-(F/(Ai*mr)-F/(Ai*mr+Ac)-Mc*1E3*(hsis-Yc)/Ic)*mr*1E3
=0.57094 N/mm²
Stress at top of precast concrete beam:

ftpbds=(F/(Ai*mr+Ac)+Mc*1E3*(d-Yc)/Ic+Mb*1E3*Yt/Iyy)*1E3
=0.085793 N/mm²
Stress at bottom of precast concrete beam:
fbpbds=(F/(Ai*mr+Ac)-Mc*1E3*Yc/Ic-Mb*1E3*Yb/Iyy)*1E3=-0.022513 N/mm²

Loading Combination 1

(no tensile stress permitted in precast beam)
Characteristic bending moment c1b(1)=1500 kNm

Loading	Loading Combination 1 Stresses N/mm²			
	Top of in-situ	Top of Beam	Bottom of in-situ	Bottom of Beam
Prestress,beam and in-situ	0	4.0637	0	12.629
Dif. shrinkage	-1.3445	0.085793	0.57094	-0.022513
Combination 1	10.123	11.429	-0.21488	-10.57
Total	8.7784	15.579	0.35606	2.0364

Loading Combination 1 - Stresses

Loading Combination 2

(tensile stress permitted (no visible cracking))
Characteristic bending moment c2b(1)=2000 kNm

Loading	Loading Combination 2 Stresses N/mm²			
	Top of in-situ	Top of Beam	Bottom of in-situ	Bottom of Beam
Prestress,beam and in-situ	0	4.0637	0	12.629
Dif. shrinkage	-1.3445	0.085793	0.57094	-0.022513
Combination 2	11.909	13.446	-0.28651	-14.093
Total	10.565	17.595	0.28443	-1.4868

Loading Combination 2 - Stresses

NOTE: The stresses from temperature differences should be added to the total stresses.

Top of in-situ concrete:
Compressive stress 10.565 N/mm² is less than the maximum allowable stress of 0.6*fckc=15 N/mm².
Top of beam:
Compressive stress 17.595 N/mm² is less than the maximum allowable stress of 0.6*fck=24 N/mm².

Bottom of in-situ concrete:
Compressive stress 0.28443 N/mm² is less than the maximum allowable stress of 0.6*fckc=15 N/mm².
Bottom of beam:
Tensile stress 1.4868 N/mm² is less than the maximum allowable tensile stress of 2.846 N/mm².

Location: Ex2 - 30 metre span wide box beam WB16

Precast prestressed concrete Wide Box Beams

Calculations for stresses at the Serviceability Limit State (SLS) in accordance with BS EN 1992-2:2005 and NA to BS EN 1992-2:2005.

Span of beam	span=30 m

Beam WB 16 section properties

Depth of beam	d=1460 mm
Cross-sectional area	Ac=785520 mm²
Centroid above soffit	Yb=696 mm
Section modulus top	Zt=277.49E6 mm³
Section modulus bottom	Zb=304.68E6 mm³
Unit weight of beam	uwb=24.5 kN/m³

Concrete compressive strengths

Characteristic cylinder strength	fcki=28 N/mm² (transfer)
Characteristic cylinder strength	fck=36 N/mm²

Concrete moduli (short-term)

Concrete modulus of elasticity	Ecmi=32 kN/mm² (transfer)
Concrete modulus of elasticity	Ecmb=34 kN/mm²

Composite section properties

Depth of in-situ concrete	disc=0 mm
Nominal diameter	nomd=12 mm
Nominal tensile strength	nomt=1600 N/mm²
Nominal steel area	noma=90 mm²
Characteristic breaking load	fpk=160 kN
Initial force per strand	ipf=100 kN
Char breaking load (strand)	fpk=160 kN
Initial force per strand	ipf=100 kN
Modulus of elasticity (strand)	Ep=200 kN/mm²

Cross-section 1

Distance from mid-span of beam	csd(1)=6.7 m
Number of layers of strand	nls(1)=6
Height from soffit	ds(1)=60 mm
Number of strands	ns(1)=18

WARNING:
Strand location is non-standard.

Height from soffit	ds(2)=120 mm
Number of strands	ns(2)=10

WARNING:
Strand location is non-standard.

Height from soffit ds(3)=1000 mm
Number of strands ns(3)=2
Height from soffit ds(4)=1100 mm
Number of strands ns(4)=2
Height from soffit ds(5)=1200 mm
Number of strands ns(5)=2
Height from soffit ds(6)=1350 mm
Number of strands ns(6)=2
Bending moment from temp.loads tlb(1)=500 kNm
Bending moment from other loads olb(1)=600 kNm

Short Term Losses (BS EN 1992-1-1)

Relaxation at transfer (%) str=0.75

Summary

Loss	Loss of Force kN	% Loss
Relaxation	27	0.75
Elastic Shortening	134.65	3.7402
Transfer Total	161.65	4.4902

Losses at Transfer

Initial force 3600 kN
Force at transfer Pt=P0-loft=3438.4 kN

Loading	Stresses at Transfer N/mm²		
	Top of Beam	Bottom of Beam	Centroid of Strands
Prestress	-0.25996	8.6016	6.6492
Self weight of Beam	6.2441	-5.6884	-3.0594
Temporary Loads	1.8014	-1.6411	-0.88262
Other Loads	2.1617	-1.9693	-1.0591
Total	9.9472	-0.69714	1.648

Beam Concrete Stresses at Transfer

Stress Limitations (BS EN 1992-1-1, Clause 5.10.2.2)

Top of beam:
Compressive stress 9.9472 N/mm² is less than allowable stresses of 0.7*fcki=19.6 N/mm² and 0.6*fck=21.6 N/mm².
Bottom of beam:
The flexural tensile stress of 0.69714 N/mm² at transfer is less than the permissible value of 1 N/mm² (as was permitted in BS5400-4).

Long Term Losses (BS EN 1992-1-1, Clause 5.10.6(1))

Relaxation after transfer(%) slr(1)=0.5
Shrinkage per unit length sul(1)=0.3E-3
Creep coefficient φ(∞,to) crf=2

Summary

Loss	Loss of Force kN	% Loss
Relaxation Elastic Shortening	27 134.65	0.75 3.7402
Transfer Total	161.65	4.4902
Relaxation Shrinkage Creep	18 194.4 96.462	0.5 5.4 2.6795
Long-term Total	308.86	8.5795
All Losses	470.51	13.07

Losses - Long term

Initial force 3600 kN
Final force Pf=P0-loftl=3129.5 kN

Loading	Final Stresses N/mm²		
	Top of Beam	Bottom of Beam	Centroid of Strands
Prestress Self weight of Beam	-0.23661 6.2441	7.8289 -5.6884	6.0519 -3.0594
Total	6.0075	2.1405	2.9925

Beam concrete stresses - Long term

Loading Combination 1

(no tensile stress permitted in precast beam)
Characteristic bending moment c1b(1)=1000 kNm

Loading	Loading Combination 1 Stresses N/mm²	
	Top of Beam	Bottom of beam
Prestress,beam Combination 1	6.0075 4.5035	2.1405 -3.2821
Total	10.511	-1.1416

Loading Combination 1 Loading - Stresses

WARNING:
Bottom of beam
Tensile stress 1.1416 N/mm² exceeds maximum allowable tensile stress of 0 N/mm².

Loading Combination 2

(tensile stress permitted (no visible cracking))
Characteristic bending moment c2b(1)=1750 kNm

Loading	Loading Combination 2 Stresses N/mm²	
	Top of Beam	Bottom of beam
Prestress,beam Combination 2	6.0075 6.3049	2.1405 -5.7437
Total	12.312	-3.6032

Loading Combination 2 Loading - Stresses

NOTE: The stresses from temperature differences should be added to the total stresses.

Top of beam:
Compressive stress 12.312 N/mm² is less than the maximum allowable stress of 0.6*fck=21.6 N/mm².

WARNING:
Bottom of beam:
Tensile stress 3.6032 N/mm² exceeds maximum allowable tensile stress of 2.7 N/mm².

Location: Ex1 - 20 metre span box beam

Precast prestressed concrete Box Beams

Calculations for stresses at the Serviceability Limit State (SLS) to BS5400-4:1990 implemented by DOT Departmental Standard BD 44/15.

Span of beam span=20 m

Beam B 7 section properties

Depth of beam d=960 mm
Cross-sectional area Ac=451208 mm²
Centroid above soffit Yb=476 mm
Section modulus top Zt=106.78E6 mm³
Section modulus bottom Zb=108.58E6 mm³
Unit weight of beam uwb=25 kN/m³

Concrete strengths

Strength at transfer fci=40 N/mm²
Characteristic strength fcu=50 N/mm²

Concrete moduli

Modulus of elasticity at transfer for concrete strength 40 N/mm² is:
Eci=31 kN/mm²
Modulus of elasticity for concrete strength 50 N/mm² is:
Ecb=34 kN/mm²

Composite section properties

Depth of in-situ concrete disc=480 mm
Char strength of in-situ concrete fcuc=30 N/mm²
Modulus of elasticity for concrete strength 30 N/mm² is:
Ecc=28 kN/mm²
Breadth of section b=1000 mm
Initial force per strand if=225 kN
Modulus of elasticity Es=200 kN/mm²

Cross-section 1

Distance from mid-span of beam csd(1)=0 m
Number of layers of strand nls(1)=4
Height from soffit ds(1)=65 mm
Number of strands ns(1)=10
Height from soffit ds(2)=115 mm
Number of strands ns(2)=6
Height from soffit ds(3)=700 mm
Number of strands ns(3)=2
Height from soffit ds(4)=900 mm
Number of strands ns(4)=2

Short Term Losses

Relaxation at transfer (%) str=1

Summary

Loss	Loss of Force kN	% Loss
Relaxation Elastic Shortening	45 323.99	1 7.1998
Transfer Total	368.99	8.1998

Losses at Transfer

Initial force 4500 kN
Force at transfer Pt=P0-loft=4131 kN

Loading	Stresses at Transfer N/mm²		
	Top of Beam	Bottom of Beam	Centroid of Strands
Prestress Self weight of Beam	-0.47717 5.2817	18.629 -5.1944	14.111 -2.7172
Total	4.8046	13.434	11.394

Beam Concrete Stresses at Transfer

Stress Limitations

Top of beam:
Compressive stress 4.8046 N/mm² is less than allowable stresses of 0.5*fci=20 N/mm² and 0.4*fcu=20 N/mm².
Bottom of beam:
Compressive stress 13.434 N/mm² is less than allowable stresses of 0.5*fci=20 N/mm² and 0.4*fcu=20 N/mm².

Long Term Losses

Relaxation after transfer(%) slr(1)=1.5
Shrinkage per unit length sul(1)=0.3E-3

Summary

Loss	Loss of Force kN	% Loss
Relaxation Elastic Shortening	45 323.99	1 7.1998
Transfer Total	368.99	8.1998
Relaxation Shrinkage Creep	67.5 198 362.32	1.5 4.4 8.0517
Long-term Total	627.82	13.952
All Losses	996.82	22.151

Losses - Long term

Initial force 4500 kN
Final force Pf=P0-loftl=3503.2 kN
Unit-weight of in-situ concrete wc=25 kN/m³

Loading	Final Stresses N/mm²		
	Top of Beam	Bottom of Beam	Centroid of Strands
Prestress Self weight of Beam In-situ concrete	-0.40465 5.2817 0.61216	15.798 -5.1944 -0.60204	11.966 -2.7172 -0.31494
Total	5.4892	10.001	8.9343

Beam concrete stresses - Long term

Composite section

Height from soffit of
in-situ concrete hsis=d-disc=480 mm
Perc'age of shrinkage remaining ps=25 %
Percentage pcr=25 %
Percentage stT=75 %
The net moment is Mc=F*e/1E3-Mb=-96.572 kNm
Stress at top of in-situ concrete:
ftisds=-(F/(Ai*mr)-F/(Ai*mr+Ac)-Mc*1E3*(d-Yc)/Ic)*mr*1E3
=-0.97688 N/mm²
Stress at bottom of in-situ concrete:
fbisds=-(F/(Ai*mr)-F/(Ai*mr+Ac)-Mc*1E3*(hsis-Yc)/Ic)*mr*1E3
=-0.28093 N/mm²
Stress at top of precast concrete beam:

ftpbds=(F/(Ai*mr+Ac)+Mc*1E3*(d-Yc)/Ic+Mb*1E3*Yt/Ixx)*1E3
=0.16168 N/mm²

Stress at bottom of precast concrete beam:
fbpbds=(F/(Ai*mr+Ac)-Mc*1E3*Yc/Ic-Mb*1E3*Yb/Ixx)*1E3=-0.014425 N/mm²

Combination 1 loading

Applied bending moment c1b(1)=1100 kNm

Loading	Combination 1 Stresses N/mm²			
	Top of in-situ	Top of Beam	Bottom of in-situ	Bottom of Beam
Prestress,beam and in-situ	0	5.4892	0	10.001
Dif. shrinkage	-0.97688	0.16168	-0.28093	-0.014425
Combination 1	8.337	10.123	-0.28506	-9.9721
Total	7.3601	15.774	-0.56598	0.014657

Combination 1 Loading - Stresses

Combination 2 to 5 loading

Applied bending moment c2b(1)=1400 kNm

Loading	Combination 2 to 5 Stresses N/mm²			
	Top of in-situ	Top of Beam	Bottom of in-situ	Bottom of Beam
Prestress,beam and in-situ	0	5.4892	0	10.001
Dif. shrinkage	-0.97688	0.16168	-0.28093	-0.014425
Combination 2-5	9.7265	11.811	-0.3628	-12.692
Total	8.7496	17.462	-0.64372	-2.705

Combination 2 to 5 Loading - Stresses

Combination 3 loading. The stresses from the Proforma for temperature differences should be added to the total stresses.

Top of in-situ concrete:
Compressive stress 8.7496 N/mm² is less than the maximum allowable stress of 0.5*fcuc=15 N/mm².
Top of beam:
Compressive stress 17.462 N/mm² is less than the maximum allowable stress of 0.4*fcu=20 N/mm².
Bottom of in-situ concrete:
Tensile stress 0.64372 N/mm² is less than the maximum allowable tensile stress of 3.6 N/mm² from Table 32.

Bottom of beam:
Tensile stress 2.705 N/mm² is less than the maximum allowable tensile stress of 3.182 N/mm².

Location: Ex2 - 30 metre span box beam B16

Precast prestressed concrete Box Beams

Calculations for stresses at the Serviceability Limit State (SLS) to BS5400-4:1990 implemented by DOT Departmental Standard BD 44/15.

Span of beam span=30 m

Beam B 16 section properties

Depth of beam	d=1460 mm
Cross-sectional area	Ac=678083 mm²
Centroid above soffit	Yb=703 mm
Section modulus top	Zt=223.47E6 mm³
Section modulus bottom	Zb=240.63E6 mm³
Unit weight of beam	uwb=24.5 kN/m³

Concrete strengths

Strength at transfer	fci=35 N/mm²
Characteristic strength	fcu=45 N/mm²

Concrete moduli

Modulus of elasticity at transfer for concrete strength 35 N/mm² is:
Eci=29.5 kN/mm²
Modulus of elasticity for concrete strength 45 N/mm² is:
Ecb=32.5 kN/mm²

Composite section properties

Depth of in-situ concrete	disc=0 mm
Nominal diameter	nomd=12 mm
Nominal tensile strength	nomt=1600 N/mm²
Nominal steel area	noma=90 mm²
Characteristic breaking load	cbl=160 kN
Initial force per strand	if=100 kN
Modulus of elasticity	Es=200 kN/mm²

Cross-section 1

Distance from mid-span of beam	csd(1)=5.2 m
Number of layers of strand	nls(1)=6
Height from soffit	ds(1)=70 mm
Number of strands	ns(1)=13

WARNING:
Strand location is non-standard.

Height from soffit	ds(2)=125 mm
Number of strands	ns(2)=13

WARNING:
Strand location is non-standard.

Height from soffit ds(3)=600 mm
Number of strands ns(3)=2
Height from soffit ds(4)=1000 mm
Number of strands ns(4)=2
Height from soffit ds(5)=1300 mm
Number of strands ns(5)=2
Height from soffit ds(6)=1400 mm
Number of strands ns(6)=2
Bending moment from temp.loads tlb(1)=700 kNm
Bending moment from other loads olb(1)=600 kNm

Short Term Losses

Relaxation at transfer (%) str=0.75

Summary

Loss	Loss of Force kN	% Loss
Relaxation	25.5	0.75
Elastic Shortening	161.59	4.7528
Transfer Total	187.09	5.5028

Losses at Transfer

Initial force 3400 kN
Force at transfer Pt=P0-loft=3212.9 kN

Loading	Stresses at Transfer N/mm²		
	Top of Beam	Bottom of Beam	Centroid of Strands
Prestress	-0.6606	9.7519	7.4162
Self weight of Beam	7.3585	-6.8336	-3.6501
Temporary Loads	3.1325	-2.909	-1.5538
Other Loads	2.685	-2.4935	-1.3319
Total	12.515	-2.4841	0.88048

Beam Concrete Stresses at Transfer

Stress Limitations

Top of beam:
Compressive stress 12.515 N/mm² is less than allowable stresses of 0.5*fci=17.5 N/mm² and 0.4*fcu=18 N/mm².
Bottom of beam:

WARNING:
The flexural tensile stress 2.4841 N/mm² at transfer in the concrete due to prestress and co-existent dead and temporary loads during erection should not exceed 1 N/mm². Clause 6.3.2.4(b)(1).

Long Term Losses

Relaxation after transfer(%) slr(1)=0.5
Shrinkage per unit length sul(1)=0.3E-3

Summary

Loss	Loss of Force kN	% Loss
Relaxation Elastic Shortening	25.5 161.59	0.75 4.7528
Transfer Total	187.09	5.5028
Relaxation Shrinkage Creep	17 183.6 81.726	0.5 5.4 2.4037
Long-term Total	282.33	8.3037
All Losses	469.42	13.806

Losses - Long term

Initial force 3400 kN
Final force Pf=P0-loftl=2930.6 kN

Loading	Final Stresses N/mm²		
	Top of Beam	Bottom of Beam	Centroid of Strands
Prestress Self weight of Beam	-0.60255 7.3585	8.895 -6.8336	6.7646 -3.6501
Total	6.7559	2.0614	3.1145

Beam concrete stresses - Long term

Combination 1 loading

Applied bending moment c1b(1)=1200 kNm

Loading	Comb 1. Stresses N/mm²	
	Top of Beam	Bottom of Beam
Prestress,beam Combination 1	6.7559 6.265	2.0614 -4.9869
Total	13.021	-2.9255

Combination 1 Loading - Stresses

WARNING:
Bottom of beam:
Tensile stress 2.9255 N/mm² exceeds maximum allowable tensile stress of 0 N/mm².

Combination 2 to 5 loading

Applied bending moment c2b(1)=2250 kNm

Loading	Comb. 2 - 5 Stresses N/mm²	
	Top of Beam	Bottom of Beam
Prestress,beam Combination 2-5	6.7559 10.069	2.0614 -9.3505
Total	16.825	-7.289

Combination 2 to 5 Loading - Stresses

Combination 3 loading. The stresses from the Proforma for temperature differences should be added to the total stresses.

Top of beam:
Compressive stress 16.825 N/mm² is less than the maximum allowable stress of 0.4*fcu=18 N/mm².

WARNING:
Bottom of beam:
Tensile stress 7.289 N/mm² exceeds maximum allowable tensile stress of 3.0187 N/mm².

Location: Ex1 - 20 metre span box beam

Precast prestressed concrete Box Beams

Calculations for stresses at the Serviceability Limit State (SLS) in accordance with BS EN 1992-2:2005 and NA to BS EN 1992-2:2005.

Span of beam	span=20 m

Beam B 7 section properties

Depth of beam	d=960 mm
Cross-sectional area	Ac=451208 mm²
Centroid above soffit	Yb=476 mm
Section modulus top	Zt=106.78E6 mm³
Section modulus bottom	Zb=108.58E6 mm³
Unit weight of beam	uwb=25 kN/m³

Concrete compressive strengths

Characteristic cylinder strength	fcki=32 N/mm² (transfer)
Characteristic cylinder strength	fck=40 N/mm²

Concrete moduli (short-term)

Concrete modulus of elasticity	Ecmi=33 kN/mm² (transfer)
Concrete modulus of elasticity	Ecmb=35 kN/mm²

Composite section properties

Depth of in-situ concrete	disc=480 mm
Char strength (in-situ concrete)	fckc=25 N/mm²
Short-term modulus of elasticity for in-situ concrete	Ecmc=31 kN/mm²
Breadth of section	b=1000 mm
Modulus of elasticity (strand)	Ep=195 kN/mm²

Cross-section 1

Distance from mid-span of beam	csd(1)=0 m
Number of layers of strand	nls(1)=4
Height from soffit	ds(1)=65 mm
Number of strands	ns(1)=10
Height from soffit	ds(2)=115 mm
Number of strands	ns(2)=6
Height from soffit	ds(3)=700 mm
Number of strands	ns(3)=2
Height from soffit	ds(4)=900 mm
Number of strands	ns(4)=2

Short Term Losses (BS EN 1992-1-1)

Relaxation at transfer (%)	str=1

Summary

Loss	Loss of Force kN	% Loss
Relaxation	45	1
Elastic Shortening	278.21	6.1826
Transfer Total	323.21	7.1826

Losses at Transfer

Initial force 4500 kN
Force at transfer Pt=P0-loft=4176.8 kN

Loading	Stresses at Transfer N/mm²		
	Top of Beam	Bottom of Beam	Centroid of Strands
Prestress	-0.48246	18.835	14.267
Self weight of Beam	5.2817	-5.1944	-2.7172
Total	4.7993	13.641	11.55

Beam Concrete Stresses at Transfer

Stress Limitations (BS EN 1992-1-1, Clause 5.10.2.2)

Top of beam:
Compressive stress 4.7993 N/mm² is less than allowable stresses of 0.7*fcki=22.4 N/mm² and 0.6*fck=24 N/mm².
Bottom of beam:
Compressive stress 13.641 N/mm² is less than allowable stresses of 0.7*fcki=22.4 N/mm² and 0.6*fck=24 N/mm².

Long Term Losses (BS EN 1992-1-1, Clause 5.10.6(1))

Relaxation after transfer(%) slr(1)=1.5
Shrinkage per unit length sul(1)=0.3E-3
Creep coefficient φ(∞,to) crf=1.8

Summary

Loss	Loss of Force kN	% Loss
Relaxation Elastic Shortening	45 278.21	1 6.1826
Transfer Total	323.21	7.1826
Relaxation Shrinkage Creep	67.5 193.05 382.24	1.5 4.29 8.4943
Long-term Total	642.79	14.284
All Losses	966.01	21.467

Losses - Long term

Initial force 4500 kN
Final force Pf=P0-loftl=3534 kN
Unit-weight of in-situ concrete wc=25 kN/m³

Loading	Final Stresses N/mm²		
	Top of Beam	Bottom of Beam	Centroid of Strands
Prestress Self weight of Beam In-situ concrete	-0.40821 5.2817 0.61216	15.937 -5.1944 -0.60204	12.072 -2.7172 -0.31494
Total	5.4857	10.14	9.0395

Beam concrete stresses - Long term

Composite section

Height from soffit of
in-situ concrete hsis=d-disc=480 mm
Perc'age of shrinkage remaining ps=25 %
Percentage pcr=25 %
Percentage stT=75 %
The net moment is Mc=F*e/1E3-Mb=-111.83 kNm
Stress at top of in-situ concrete:
ftisds=-(F/(Ai*mr)-F/(Ai*mr+Ac)-Mc*1E3*(d-Yc)/Ic)*mr*1E3
=-0.98164 N/mm²
Stress at bottom of in-situ concrete:
fbisds=-(F/(Ai*mr)-F/(Ai*mr+Ac)-Mc*1E3*(hsis-Yc)/Ic)*mr*1E3
=-0.11838 N/mm²
Stress at top of precast concrete beam:
ftpbds=(F/(Ai*mr+Ac)+Mc*1E3*(d-Yc)/Ic+Mb*1E3*Yt/Iyy)*1E3
=0.14638 N/mm²
Stress at bottom of precast concrete beam:

fbpbds=(F/(Ai*mr+Ac)-Mc*1E3*Yc/Ic-Mb*1E3*Yb/Iyy)*1E3=-0.01752 N/mm²

Loading Combination 1

(no tensile stress permitted in precast beam)
Characteristic bending moment c1b(1)=1100 kNm

Loading	Loading Combination 1 Stresses N/mm²			
	Top of in-situ	Top of Beam	Bottom of in-situ	Bottom of Beam
Prestress,beam and in-situ	0	5.4857	0	10.14
Dif. shrinkage	-0.98164	0.14638	-0.11838	-0.01752
Combination 1	8.9021	10.051	-0.3311	-9.9609
Total	7.9205	15.683	-0.44948	0.16173

Loading Combination 1 - Stresses

Loading Combination 2

(tensile stress permitted (no visible cracking))
Characteristic bending moment c2b(1)=1400 kNm

Loading	Loading Combination 2 Stresses N/mm²			
	Top of in-situ	Top of Beam	Bottom of in-situ	Bottom of Beam
Prestress,beam and in-situ	0	5.4857	0	10.14
Dif. shrinkage	-0.98164	0.14638	-0.11838	-0.01752
Combination 2	10.386	11.726	-0.42139	-12.677
Total	9.4042	17.358	-0.53978	-2.5549

Loading Combination 2 - Stresses

NOTE: The stresses from temperature differences should be added to the total stresses.

Top of in-situ concrete:
Compressive stress 9.4042 N/mm² is less than the maximum allowable stress of 0.6*fckc=15 N/mm².
Top of beam:
Compressive stress 17.358 N/mm² is less than the maximum allowable stress of 0.6*fck=24 N/mm².
Bottom of in-situ concrete:
Tensile stress 0.53978 N/mm² is less than the maximum allowable tensile stress of 2.8721 N/mm² (EN 1992-1-1 expression 3.23).

Bottom of beam:
Tensile stress 2.5549 N/mm² is less than the maximum allowable tensile stress of 2.846 N/mm².

Location: Ex2 - 30 metre span box beam B16

Precast prestressed concrete Box Beams

Calculations for stresses at the Serviceability Limit State (SLS) in accordance with BS EN 1992-2:2005 and NA to BS EN 1992-2:2005.

Span of beam	span=30 m

Beam B 16 section properties

Depth of beam	d=1460 mm
Cross-sectional area	Ac=678083 mm²
Centroid above soffit	Yb=703 mm
Section modulus top	Zt=223.47E6 mm³
Section modulus bottom	Zb=240.63E6 mm³
Unit weight of beam	uwb=24.5 kN/m³

Concrete compressive strengths

Characteristic cylinder strength	fcki=28 N/mm² (transfer)
Characteristic cylinder strength	fck=36 N/mm²

Concrete moduli (short-term)

Concrete modulus of elasticity	Ecmi=32 kN/mm² (transfer)
Concrete modulus of elasticity	Ecmb=34 kN/mm²

Composite section properties

Depth of in-situ concrete	disc=0 mm
Nominal diameter	nomd=12 mm
Nominal tensile strength	nomt=1600 N/mm²
Nominal steel area	noma=90 mm²
Characteristic breaking load	fpk=160 kN
Initial force per strand	ipf=100 kN
Char breaking load (strand)	fpk=160 kN
Initial force per strand	ipf=100 kN
Modulus of elasticity (strand)	Ep=195 kN/mm²

Cross-section 1

Distance from mid-span of beam	csd(1)=5.2 m
Number of layers of strand	nls(1)=6
Height from soffit	ds(1)=70 mm
Number of strands	ns(1)=13

WARNING:
Strand location is non-standard.

Height from soffit	ds(2)=125 mm
Number of strands	ns(2)=13

WARNING:
Strand location is non-standard.

Height from soffit ds(3)=600 mm
Number of strands ns(3)=2
Height from soffit ds(4)=1000 mm
Number of strands ns(4)=2
Height from soffit ds(5)=1300 mm
Number of strands ns(5)=2
Height from soffit ds(6)=1400 mm
Number of strands ns(6)=2
Bending moment from temp.loads tlb(1)=700 kNm
Bending moment from other loads olb(1)=600 kNm

Short Term Losses (BS EN 1992-1-1)

Relaxation at transfer (%) str=0.75

Summary

Loss	Loss of Force kN	% Loss
Relaxation Elastic Shortening	25.5 139.25	0.75 4.0956
Transfer Total	164.75	4.8456

Losses at Transfer

Initial force 3400 kN
Force at transfer Pt=P0-loft=3235.2 kN

Loading	Stresses at Transfer N/mm²		
	Top of Beam	Bottom of Beam	Centroid of Strands
Prestress Self weight of Beam Temporary Loads Other Loads	-0.66519 7.3585 3.1325 2.685	9.8197 -6.8336 -2.909 -2.4935	7.4678 -3.6501 -1.5538 -1.3319
Total	12.511	-2.4163	0.93206

Beam Concrete Stresses at Transfer

Stress Limitations (BS EN 1992-1-1, Clause 5.10.2.2)

Top of beam:
Compressive stress 12.511 N/mm² is less than allowable stresses of 0.7*fcki=19.6 N/mm² and 0.6*fck=21.6 N/mm².
Bottom of beam:

WARNING:
The flexural tensile stress 2.4163 N/mm² at transfer in the concrete due to prestress and co-existent dead and temporary loads during erection should not exceed 1 N/mm² (as was permitted in BS5400-4).

Long Term Losses (BS EN 1992-1-1, Clause 5.10.6(1))

Relaxation after transfer(%) slr(1)=0.5
Shrinkage per unit length sul(1)=0.3E-3
Creep coefficient φ(∞,to) crf=1.8

Summary

Loss	Loss of Force kN	% Loss
Relaxation Elastic Shortening	25.5 139.25	0.75 4.0956
Transfer Total	164.75	4.8456
Relaxation Shrinkage Creep	17 179.01 78.529	0.5 5.265 2.3097
Long-term Total	274.54	8.0747
All Losses	439.29	12.92

Losses - Long term

Initial force 3400 kN
Final force Pf=P0-loftl=2960.7 kN

Loading	Final Stresses N/mm²		
	Top of Beam	Bottom of Beam	Centroid of Strands
Prestress Self weight of Beam	-0.60875 7.3585	8.9864 -6.8336	6.8341 -3.6501
Total	6.7497	2.1529	3.184

Beam concrete stresses - Long term

Loading Combination 1

(no tensile stress permitted in precast beam)
Characteristic bending moment c1b(1)=1200 kNm

Loading	Loading Combination 1 Stresses N/mm²	
	Top of Beam	Bottom of beam
Prestress,beam Combination 1	6.7497 6.265	2.1529 -4.9869
Total	13.015	-2.834

Loading Combination 1 Loading - Stresses

WARNING:
Bottom of beam:
Tensile stress 2.834 N/mm² exceeds maximum allowable tensile stress of 0 N/mm².

Loading Combination 2

(tensile stress permitted (no visible cracking))
Characteristic bending moment c2b(1)=2250 kNm

Loading	Loading Combination 2 Stresses N/mm²	
	Top of Beam	Bottom of beam
Prestress,beam Combination 2	6.7497 10.069	2.1529 -9.3505
Total	16.818	-7.1976

Loading Combination 2 Loading - Stresses

NOTE: The stresses from temperature differences should be added to the total stresses.

Top of beam:
Compressive stress 16.818 N/mm² is less than the maximum allowable stress of 0.6*fck=21.6 N/mm².

WARNING:
Bottom of beam:
Tensile stress 7.1976 N/mm² exceeds maximum allowable tensile stress of 2.7 N/mm².

Location: Ex1 - 23 metre span I beam

Precast prestressed concrete beam with non-standard section

Calculations for stresses at the Serviceability Limit State (SLS) to BS5400-4:1990 implemented by DOT Departmental Standard BD 44/15.

Span of beam span=23 m

Beam section properties

Depth of beam d=1425 mm
Cross-sectional area Ac=411675 mm²
Centroid above soffit Yb=595 mm
Section modulus top Zt=113.14E6 mm³
Section modulus bottom Zb=157.87E6 mm³
Unit weight of beam uwb=24 kN/m³

Concrete strengths

Strength at transfer fci=40 N/mm²
Characteristic strength fcu=50 N/mm²

Concrete moduli

Modulus of elasticity at transfer for concrete strength 40 N/mm² is:
Eci=31 kN/mm²
Modulus of elasticity for concrete strength 50 N/mm² is:
Modulus Ecb=34 kN/mm²

Composite section properties

Char strength (in-situ concrete) fcuc=30 N/mm²
Modulus of elasticity for concrete strength 30 N/mm² is:
Ecc=28 kN/mm²

Item No. 1

Item weighting iw1=0.82353
X co-ordinate X(1)=445 mm
Y co-ordinate Y(1)=0 mm
X co-ordinate X(2)=1055 mm
Y co-ordinate Y(2)=0 mm
X co-ordinate X(3)=1055 mm
Y co-ordinate Y(3)=200 mm
X co-ordinate X(4)=825 mm
Y co-ordinate Y(4)=430 mm
X co-ordinate X(5)=825 mm
Y co-ordinate Y(5)=1120 mm
X co-ordinate X(6)=930 mm
Y co-ordinate Y(6)=1225 mm
X co-ordinate X(7)=930 mm
Y co-ordinate Y(7)=1425 mm
X co-ordinate X(8)=1500 mm

Y co-ordinate	Y(8)=1425 mm
X co-ordinate	X(9)=1500 mm
Y co-ordinate	Y(9)=1605 mm
X co-ordinate	X(10)=0 mm
Y co-ordinate	Y(10)=1605 mm
X co-ordinate	X(11)=0 mm
Y co-ordinate	Y(11)=1425 mm
X co-ordinate	X(12)=570 mm
Y co-ordinate	Y(12)=1425 mm
X co-ordinate	X(13)=570 mm
Y co-ordinate	Y(13)=1225 mm
X co-ordinate	X(14)=675 mm
Y co-ordinate	Y(14)=1120 mm
X co-ordinate	X(15)=675 mm
Y co-ordinate	Y(15)=430 mm
X co-ordinate	X(16)=445 mm
Y co-ordinate	Y(16)=200 mm
X co-ordinate	X(17)=445 mm
Y co-ordinate	Y(17)=0 mm

Item No. 2

Second moment of area	IXX2=93.933E9 mm^4
Area of item	A2=411675 mm^2
Centroid from X-X axis	YC2=595 mm
Item weighting	iw2=0.17647
Depth of composite section	di=1605 mm
Initial force per strand	if=159 kN
Modulus of elasticity	Es=195 kN/mm^2

Cross-section 1

Distance from mid-span of beam	csd(1)=0 m
Number of layers of strand	nls(1)=5
Height above soffit	ds(1)=40 mm
Number of strands	ns(1)=14
Height above soffit	ds(2)=80 mm
Number of strands	ns(2)=14
Height above soffit	ds(3)=120 mm
Number of strands	ns(3)=2
Height above soffit	ds(4)=160 mm
Number of strands	ns(4)=2
Height above soffit	ds(5)=1385 mm
Number of strands	ns(5)=4

Short Term Losses

Relaxation at transfer (%)	str=1

Summary

Loss	Loss of Force kN	% Loss
Relaxation	57.24	1
Elastic Shortening	705.89	12.332
Transfer Total	763.13	13.332

Losses at Transfer

Initial force 5724 kN
Force at transfer Pt=P0-loft=4960.9 kN

Loading	Stresses at Transfer N/mm²		
	Top of Beam	Bottom of Beam	Centroid of Strands
Prestress	-4.5581	23.957	19.632
Self weight of Beam	5.7729	-4.1384	-2.6353
Total	1.2148	19.818	16.997

Beam Concrete Stresses at Transfer

Stress Limitations

Top of beam:
Compressive stress 1.2148 N/mm² is less than allowable stresses of 0.5*fci=20 N/mm² and 0.4*fcu=20 N/mm².
Bottom of beam:
Compressive stress 19.818 N/mm² is less than allowable stresses of 0.5*fci=20 N/mm² and 0.4*fcu=20 N/mm².

Long Term Losses

Relaxation after transfer(%) slr(1)=1
Shrinkage per unit length sul(1)=0.3E-3

Summary

Loss	Loss of Force kN	% Loss
Relaxation Elastic Shortening	57.24 705.89	1 12.332
Transfer Total	763.13	13.332
Relaxation Shrinkage Creep	57.24 292.73 989.68	1 5.1142 17.29
Long-term Total	1339.7	23.404
All Losses	2102.8	36.736

Losses - Long term

Initial force 5724 kN
Final force Pf=P0-loftl=3621.2 kN
Unit-weight of in-situ concrete wc=25 kN/m³

Loading	Final Stresses N/mm²		
	Top of Beam	Bottom of Beam	Centroid of Strands
Prestress Self weight of Beam In-situ concrete	-3.3272 5.7729 3.9439	17.487 -4.1384 -2.8273	14.331 -2.6353 -1.8004
Total	6.3896	10.522	9.8949

Beam concrete stresses - Long term

Composite section

Height from beam soffit to
bottom of in-situ concrete hsis=1425 mm
Perc'age of shrinkage remaining ps=25 %
Percentage pcr=25 %
Percentage stT=50 %
The net moment is Mc=F*e/1E3-Mb=-367.6 kNm
Stress at top of in-situ concrete:
ftisds=-(F/(Ai*mr)-F/(Ai*mr+Ac)-Mc*1E3*(di-Yc)/Ic)*mr*1E3
=-0.41487 N/mm²
Stress at bottom of in-situ concrete:
fbisds=-(F/(Ai*mr)-F/(Ai*mr+Ac)-Mc*1E3*(hsis-Yc)/Ic)*mr*1E3
=-0.16346 N/mm²

Stress at top of precast concrete beam:
ftpbds=(F/(Ai*mr+Ac)+Mc*1E3*(d-Yc)/Ic+Mb*1E3*Yt/Ixx)*1E3
=0.83341 N/mm²
Stress at bottom of precast concrete beam:
fbpbds=(F/(Ai*mr+Ac)-Mc*1E3*Yc/Ic-Mb*1E3*Yb/Ixx)*1E3=-0.27209 N/mm²

Combination 1 loading

Applied bending moment c1b(1)=2300 kNm

Loading	Combination 1 Stresses N/mm²			
	Top of in-situ	Top of Beam	Bottom of in-situ	Bottom of Beam
Prestress,beam and in-situ	0	6.3896	0	10.522
Dif. shrinkage	-0.41487	0.83341	-0.16346	-0.27209
Combination 1	6.2685	5.6186	4.6271	-9.7371
Total	5.8536	12.842	4.4636	0.51237

Combination 1 Loading - Stresses

Combination 2 to 5 loading

Applied bending moment c2b(1)=2600 kNm

Loading	Combination 2 to 5 Stresses N/mm²			
	Top of in-situ	Top of Beam	Bottom of in-situ	Bottom of Beam
Prestress, beam and in-situ	0	6.3896	0	10.522
Dif. shrinkage	-0.41487	0.83341	-0.16346	-0.27209
Combination 2-5	6.7909	6.0868	5.0127	-11.007
Total	6.376	13.31	4.8492	-0.75768

Combination 2 to 5 Loading - Stresses

Combination 3 loading. The stresses from the Proforma for temperature differences should be added to the total stresses.

Top of in-situ concrete:
Compressive stress 6.376 N/mm² is less than the maximum allowable stress of 0.5*fcuc=15 N/mm².
Top of beam:
Compressive stress 13.31 N/mm² is less than the maximum allowable stress of 0.4*fcu=20 N/mm².

Bottom of in-situ concrete:
Compressive stress 4.8492 N/mm² is less than the maximum allowable stress of 0.5*fcuc=15 N/mm².
Bottom of beam:
Tensile stress 0.75768 N/mm² is less than the maximum allowable tensile stress of 3.182 N/mm².

Location: Ex2 - 20 metre span beam

Precast prestressed concrete beam with non-standard section

Calculations for stresses at the Serviceability Limit State (SLS) to BS5400-4:1990 implemented by DOT Departmental Standard BD 44/15.

Span of beam span=20 m

Beam section properties

Depth of beam d=1040 mm
Cross-sectional area Ac=387050 mm²
Centroid above soffit Yb=409 mm
Section modulus top Zt=75.39E6 mm³
Section modulus bottom Zb=116.23E6 mm³
Unit weight of beam uwb=24 kN/m³

Concrete strengths

Strength at transfer fci=40 N/mm²
Characteristic strength fcu=50 N/mm²

Concrete moduli

Modulus of elasticity at transfer for concrete strength 40 N/mm² is:
Eci=31 kN/mm²
Modulus of elasticity for concrete strength 50 N/mm² is:
Modulus Ecb=34 kN/mm²

Composite section properties

Char strength (in-situ concrete) fcuc=40 N/mm²
Modulus of elasticity for concrete strength 40 N/mm² is:
Ecc=31 kN/mm²
Depth of composite section di=1165 mm
Area of in-situ concrete Ai=229500 mm²
Centroid of in-situ concrete Yi=1087.9 mm
Centroid of composite section Yc=661.69 mm
Second moment of area Ic=114.4E9 mm⁴
Initial force per strand if=174 kN
Modulus of elasticity Es=195 kN/mm²

Cross-section 1

Distance from mid-span of beam csd(1)=0 m
Number of layers of strand nls(1)=4
Height above soffit ds(1)=60 mm
Number of strands ns(1)=11
Height above soffit ds(2)=110 mm
Number of strands ns(2)=14
Height above soffit ds(3)=880 mm
Number of strands ns(3)=2
Height above soffit ds(4)=930 mm

Number of strands ns(4)=2

Short Term Losses

Relaxation at transfer (%) str=1

Summary

Loss	Loss of Force kN	% Loss
Relaxation Elastic Shortening	50.46 442.89	1 8.7771
Transfer Total	493.35	9.7771

Losses at Transfer

Initial force 5046 kN
Force at transfer Pt=P0-loft=4552.6 kN

Loading	Stresses at Transfer N/mm²		
	Top of Beam	Bottom of Beam	Centroid of Strands
Prestress Self weight of Beam	-0.82575 6.165	19.922 -3.996	15.918 -2.0352
Total	5.3393	15.926	13.883

Beam Concrete Stresses at Transfer

Stress Limitations

Top of beam:
Compressive stress 5.3393 N/mm² is less than allowable stresses of 0.5*fci=20 N/mm² and 0.4*fcu=20 N/mm².
Bottom of beam:
Compressive stress 15.926 N/mm² is less than allowable stresses of 0.5*fci=20 N/mm² and 0.4*fcu=20 N/mm².

Long Term Losses

Relaxation after transfer(%) slr(1)=2
Shrinkage per unit length sul(1)=0.3E-3

Summary

Loss	Loss of Force kN	% Loss
Relaxation Elastic Shortening	50.46 442.89	1 8.7771
Transfer Total	493.35	9.7771
Relaxation Shrinkage Creep	100.92 235.81 574.73	2 4.6733 11.39
Long-term Total	911.46	18.063
All Losses	1404.8	27.84

Losses - Long term

Initial force 5046 kN
Final force Pf=P0-loftl=3641.2 kN
Unit-weight of in-situ concrete wc=24 kN/m³

Loading	Final Stresses N/mm²		
	Top of Beam	Bottom of Beam	Centroid of Strands
Prestress Self weight of Beam In-situ concrete	-0.66043 6.165 3.6555	15.933 -3.996 -2.3694	12.731 -2.0352 -1.2068
Total	9.1602	9.5679	9.4892

Beam concrete stresses - Long term

Composite section

Height from beam soffit to
bottom of in-situ concrete hsis=1005 mm
Perc'age of shrinkage remaining ps=25 %
Percentage pcr=25 %
Percentage stT=67 %
The net moment is Mc=F*e/1E3-Mb=-85.455 kNm
Stress at top of in-situ concrete:
ftisds=-(F/(Ai*mr)-F/(Ai*mr+Ac)-Mc*1E3*(di-Yc)/Ic)*mr*1E3
=-0.030723 N/mm²
Stress at bottom of in-situ concrete:
fbisds=-(F/(Ai*mr)-F/(Ai*mr+Ac)-Mc*1E3*(hsis-Yc)/Ic)*mr*1E3
=0.088794 N/mm²

Stress at top of precast concrete beam:
ftpbds=(F/(Ai*mr+Ac)+Mc*1E3*(d-Yc)/Ic+Mb*1E3*Yt/Ixx)*1E3
=-0.067041 N/mm²
Stress at bottom of precast concrete beam:
fbpbds=(F/(Ai*mr+Ac)-Mc*1E3*Yc/Ic-Mb*1E3*Yb/Ixx)*1E3=0.017159 N/mm²

Combination 1 loading

Applied bending moment c1b(1)=1446 kNm

Loading	Combination 1 Stresses N/mm²			
	Top of in-situ	Top of Beam	Bottom of in-situ	Bottom of Beam
Prestress,beam and in-situ	0	9.1602	0	9.5679
Dif. shrinkage	-0.030723	-0.067041	0.088794	0.017159
Combination 1	9.1291	6.8618	6.227	-8.3637
Total	9.0984	15.955	6.3158	1.2214

Combination 1 Loading - Stresses

Combination 2 to 5 loading

Applied bending moment c2b(1)=1907 kNm

Loading	Combination 2 to 5 Stresses N/mm²			
	Top of in-situ	Top of Beam	Bottom of in-situ	Bottom of Beam
Prestress, beam and in-situ	0	9.1602	0	9.5679
Dif. shrinkage	-0.030723	-0.067041	0.088794	0.017159
Combination 2-5	8.39	6.3063	5.7228	-11.03
Total	8.3592	15.399	5.8116	-1.445

Combination 2 to 5 Loading - Stresses

Combination 3 loading. The stresses from the Proforma for temperature differences should be added to the total stresses.

Top of in-situ concrete:
Compressive stress 8.3592 N/mm² is less than the maximum allowable stress of 0.5*fcuc=20 N/mm².
Top of beam:
Compressive stress 15.399 N/mm² is less than the maximum allowable stress of 0.4*fcu=20 N/mm².

Bottom of in-situ concrete:
Compressive stress 5.8116 N/mm² is less than the maximum allowable stress of 0.5*fcuc=20 N/mm².
Bottom of beam:
Tensile stress 1.445 N/mm² is less than the maximum allowable tensile stress of 3.182 N/mm².

Copyright 1986-2024 Fitzroy Systems Ltd.

Location: Ex3 - 13.5 metre span solid edge beam

Precast prestressed concrete beam with non-standard section

Calculations for stresses at the Serviceability Limit State (SLS) to BS5400-4:1990 implemented by DOT Departmental Standard BD 44/15.

Span of beam span=13.5 m

Beam section properties

Depth of beam d=615 mm
Cross-sectional area Ac=130675 mm²
Centroid above soffit Yb=244 mm
Section modulus top Zt=14.3E6 mm³
Section modulus bottom Zb=21.81E6 mm³
Unit weight of beam uwb=25 kN/m³

Concrete strengths

Strength at transfer fci=40 N/mm²
Characteristic strength fcu=50 N/mm²

Concrete moduli

Modulus of elasticity at transfer for concrete strength 40 N/mm² is:
Eci=31 kN/mm²
Modulus of elasticity for concrete strength 50 N/mm² is:
Modulus Ecb=34 kN/mm²

Composite section properties

Char strength (in-situ concrete) fcuc=30 N/mm²
Modulus of elasticity for concrete strength 30 N/mm² is:
Ecc=28 kN/mm²

Item No. 1

Item weighting iw1=0.82353
X co-ordinate X(1)=0 mm
Y co-ordinate Y(1)=0 mm
X co-ordinate X(2)=508 mm
Y co-ordinate Y(2)=0 mm
X co-ordinate X(3)=508 mm
Y co-ordinate Y(3)=250 mm
X co-ordinate X(4)=650 mm
Y co-ordinate Y(4)=350 mm
X co-ordinate X(5)=650 mm
Y co-ordinate Y(5)=790 mm
X co-ordinate X(6)=150 mm
Y co-ordinate Y(6)=790 mm
X co-ordinate X(7)=150 mm
Y co-ordinate Y(7)=690 mm
X co-ordinate X(8)=0 mm

Y co-ordinate Y(8)=690 mm
X co-ordinate X(9)=0 mm
Y co-ordinate Y(9)=0 mm

Item No. 2

Second moment of area IXX2=5.3216E9 mm⁴
Area of item A2=130675 mm²
Centroid from X-X axis YC2=244 mm
Item weighting iw2=0.17647
Depth of composite section di=790 mm
Nominal diameter nomd=12 mm
Nominal tensile strength nomt=1700 N/mm²
Nominal steel area noma=100 mm²
Characteristic breaking load cbl=150 kN
Initial force per strand if=100 kN
Modulus of elasticity Es=195 kN/mm²

Cross-section 1

Distance from mid-span of beam csd(1)=2 m
Number of layers of strand nls(1)=4
Height above soffit ds(1)=49 mm
Number of strands ns(1)=10
Height above soffit ds(2)=85 mm
Number of strands ns(2)=8
Height above soffit ds(3)=520 mm
Number of strands ns(3)=2
Height above soffit ds(4)=580 mm
Number of strands ns(4)=2
Bending moment from temp.loads tlb(1)=80 kNm
Bending moment from other loads olb(1)=50 kNm

Short Term Losses

Relaxation at transfer (%) str=1

Summary

Loss	Loss of Force kN	% Loss
Relaxation	22	1
Elastic Shortening	277.37	12.608
Transfer Total	299.37	13.608

Losses at Transfer

Initial force 2200 kN
Force at transfer Pt=P0-loft=1900.6 kN

Loading	Stresses at Transfer N/mm²		
	Top of Beam	Bottom of Beam	Centroid of Strands
Prestress	2.511	22.459	17.49
Self weight of Beam	4.733	-3.1128	-1.1586
Temporary Loads	5.5772	-3.668	-1.3653
Other Loads	3.4858	-2.2925	-0.85329
Total	16.307	13.386	14.113

Beam Concrete Stresses at Transfer

Stress Limitations

Top of beam:
Compressive stress 16.307 N/mm² is less than allowable stresses of 0.5*fci=20 N/mm² and 0.4*fcu=20 N/mm².
Bottom of beam:
Compressive stress 13.386 N/mm² is less than allowable stresses of 0.5*fci=20 N/mm² and 0.4*fcu=20 N/mm².

Long Term Losses

Relaxation after transfer(%) slr(1)=1.5
Shrinkage per unit length sul(1)=0.3E-3

Summary

Loss	Loss of Force kN	% Loss
Relaxation	22	1
Elastic Shortening	277.37	12.608
Transfer Total	299.37	13.608
Relaxation	33	1.5
Shrinkage	128.7	5.85
Creep	363.2	16.509
Long-term Total	524.9	23.859
All Losses	824.27	37.467

Losses - Long term

Initial force 2200 kN
Final force Pf=P0-loftl=1375.7 kN
Unit-weight of in-situ concrete wc=25 kN/m³

Loading	Final Stresses N/mm²		
	Top of Beam	Bottom of Beam	Centroid of Strands
Prestress	1.8175	16.256	12.66
Self weight of Beam	4.733	-3.1128	-1.1586
In-situ concrete	11.779	-7.7471	-2.8835
Total	18.33	5.3966	8.618

Beam concrete stresses - Long term

Composite section

Height from beam soffit to
bottom of in-situ concrete hsis=100 mm
Perc'age of shrinkage remaining ps=40 %
Percentage pcr=40 %
Percentage stT=50 %
The net moment is Mc=F*e/1E3-Mb=-75.167 kNm
Stress at top of in-situ concrete:
ftisds=-(F/(Ai*mr)-F/(Ai*mr+Ac)-Mc*1E3*(di-Yc)/Ic)*mr*1E3
=0.60297 N/mm²
Stress at bottom of in-situ concrete:
fbisds=-(F/(Ai*mr)-F/(Ai*mr+Ac)-Mc*1E3*(hsis-Yc)/Ic)*mr*1E3
=2.7803 N/mm²
Stress at top of precast concrete beam:
ftpbds=(F/(Ai*mr+Ac)+Mc*1E3*(d-Yc)/Ic+Mb*1E3*Yt/Ixx)*1E3=-9.696 N/mm²
Stress at bottom of precast concrete beam:
fbpbds=(F/(Ai*mr+Ac)-Mc*1E3*Yc/Ic-Mb*1E3*Yb/Ixx)*1E3=-0.25506 N/mm²

Combination 1 loading

Applied bending moment c1b(1)=550 kNm

Loading	Combination 1 Stresses N/mm²			
	Top of in-situ	Top of Beam	Bottom of in-situ	Bottom of Beam
Prestress,beam and in-situ	0	18.33	0	5.3966
Dif. shrinkage	0.60297	-9.696	2.7803	-0.25506
Combination 1	9.8989	6.6675	-6.858	-11.131
Total	10.502	15.301	-4.0777	-5.9899

Combination 1 Loading - Stresses

WARNING:
Bottom of beam:
Tensile stress 5.9899 N/mm² exceeds maximum allowable tensile stress of 0 N/mm².

Combination 2 to 5 loading

Applied bending moment c2b(1)=625 kNm

WARNING:
Bottom of beam:
Tensile stress 7.5078 N/mm² exceeds modified allowable tensile stress of 1.382 N/mm².

Loading	Combination 2 to 5 Stresses N/mm²			
	Top of in-situ	Top of Beam	Bottom of in-situ	Bottom of Beam
Prestress, beam and in-situ	0	18.33	0	5.3966
Dif. shrinkage	0.60297	-9.696	2.7803	-0.25506
Combination 2-5	10.311	6.9453	-7.7932	-12.649
Total	10.914	15.579	-5.0129	-7.5078

Combination 2 to 5 Loading - Stresses

Combination 3 loading. The stresses from the Proforma for temperature differences should be added to the total stresses.

Top of in-situ concrete:
Compressive stress 10.914 N/mm² is less than the maximum allowable stress of 0.5*fcuc=15 N/mm².
Top of beam:
Compressive stress 15.579 N/mm² is less than the maximum allowable stress of 0.4*fcu=20 N/mm².
Bottom of in-situ concrete:
Tensile stress 5.0129 N/mm² is less than the modified maximum allowable tensile stress of 5.4 N/mm² from Table 32.

WARNING:
Bottom of beam:
Tensile stress 7.5078 N/mm² exceeds modified max allowable tensile stress of 1.382 N/mm².

Location: Ex4 - 17.0 metre span solid section

Precast prestressed concrete beam with non-standard section

Calculations for stresses at the Serviceability Limit State (SLS) to BS5400-4:1990 implemented by DOT Departmental Standard BD 44/15.

Span of beam span=17 m

Beam section properties

Depth of beam d=775 mm
Cross-sectional area Ac=163360 mm²
Centroid above soffit Yb=334 mm
Section modulus top Zt=24.31E6 mm³
Section modulus bottom Zb=32.1E6 mm³
Unit weight of beam uwb=25 kN/m³

Concrete strengths

Strength at transfer fci=35 N/mm²
Characteristic strength fcu=40 N/mm²

Concrete moduli

Modulus of elasticity at transfer for concrete strength 35 N/mm² is:
Eci=29.5 kN/mm²
Modulus of elasticity for concrete strength 40 N/mm² is:
Modulus Ecb=31 kN/mm²

Composite section properties

Char strength (in-situ concrete) fcuc=35 N/mm²
Modulus of elasticity for concrete strength 35 N/mm² is:
Ecc=29.5 kN/mm²
Depth of composite section di=850 mm
Area of in-situ concrete Ai=304140 mm²
Centroid of composite section Yc=425 mm
Second moment of area Ic=28.147E9 mm⁴
Initial force per strand if=200 kN
Modulus of elasticity Es=195 kN/mm²

Cross-section 1

Distance from mid-span of beam csd(1)=6 m
Number of layers of strand nls(1)=6
Height above soffit ds(1)=50 mm
Number of strands ns(1)=4
Height above soffit ds(2)=90 mm
Number of strands ns(2)=3
Height above soffit ds(3)=260 mm
Number of strands ns(3)=1
Height above soffit ds(4)=500 mm
Number of strands ns(4)=1

Height above soffit ds(5)=620 mm
Number of strands ns(5)=1
Height above soffit ds(6)=740 mm
Number of strands ns(6)=1

Short Term Losses

Relaxation at transfer (%) str=1

Summary

Loss	Loss of Force kN	% Loss
Relaxation Elastic Shortening	22 248.17	1 11.281
Transfer Total	270.17	12.281

Losses at Transfer

Initial force 2200 kN
Force at transfer Pt=P0-loft=1929.8 kN

Loading	Stresses at Transfer N/mm²		
	Top of Beam	Bottom of Beam	Centroid of Strands
Prestress Self weight of Beam	3.9909 3.0447	17.738 -2.306	13.561 -0.68038
Total	7.0356	15.432	12.881

Beam Concrete Stresses at Transfer

Stress Limitations

Top of beam:
Compressive stress 7.0356 N/mm² is less than allowable stresses of 0.5*fci=17.5 N/mm² and 0.4*fcu=16 N/mm².
Bottom of beam:
Compressive stress 15.432 N/mm² is less than allowable stresses of 0.5*fci=17.5 N/mm² and 0.4*fcu=16 N/mm².

Long Term Losses

Relaxation after transfer(%) slr(1)=2
Shrinkage per unit length sul(1)=0.3E-3

Summary

Loss	Loss of Force kN	% Loss
Relaxation Elastic Shortening	22 248.17	1 11.281
Transfer Total	270.17	12.281
Relaxation Shrinkage Creep	44 143.5 392.54	2 6.5228 17.843
Long-term Total	580.04	26.365
All Losses	850.21	38.646

Losses - Long term

Initial force 2200 kN
Final force Pf=P0-loftl=1349.8 kN
Unit-weight of in-situ concrete wc=25 kN/m³

Loading	Final Stresses N/mm²		
	Top of Beam	Bottom of Beam	Centroid of Strands
Prestress Self weight of Beam In-situ concrete	2.7914 3.0447 5.6686	12.406 -2.306 -4.2933	9.4853 -0.68038 -1.2667
Total	11.505	5.8072	7.5382

Beam concrete stresses - Long term

Composite section

Height from beam soffit to
bottom of in-situ concrete hsis=100 mm

Combination 1 loading

Applied bending moment c1b(1)=200 kNm

Loading	Combination 1 Stresses N/mm²			
	Top of in-situ	Top of Beam	Bottom of in-situ	Bottom of Beam
Prestress,beam and in-situ	0	11.505	0	5.8072
Combination 1	3.3973	2.7978	-2.3093	-3.0199
Total	3.3973	14.303	-2.3093	2.7873

Combination 1 Loading - Stresses

Combination 2 to 5 loading

Applied bending moment c2b(1)=250 kNm

Loading	Combination 2 to 5 Stresses N/mm²			
	Top of in-situ	Top of Beam	Bottom of in-situ	Bottom of Beam
Prestress, beam and in-situ	0	11.505	0	5.8072
Combination 2-5	3.7748	3.1087	-2.8866	-3.7748
Total	3.7748	14.613	-2.8866	2.0324

Combination 2 to 5 Loading - Stresses

Combination 3 loading. The stresses from the Proforma for temperature differences should be added to the total stresses.

Top of in-situ concrete:
Compressive stress 3.7748 N/mm² is less than the maximum allowable stress of 0.5*fcuc=17.5 N/mm².
Top of beam:
Compressive stress 14.613 N/mm² is less than the maximum allowable stress of 0.4*fcu=16 N/mm².
Bottom of in-situ concrete:
Tensile stress 2.8866 N/mm² is less than the maximum allowable tensile stress of 4 N/mm² from Table 32.
Bottom of beam:
Compressive stress 2.0324 N/mm² is less than the maximum allowable stress of 0.4*fcu=16 N/mm².

Location: Ex1 - 24 metre span I beam

Precast prestressed concrete beam with non-standard section

Calculations for stresses at the Serviceability Limit State (SLS) in accordance with BS EN 1992-2:2005 and NA to BS EN 1992-2:2005.

Beam span under consideration span=24 m

Beam section properties

Depth of beam	d=1425 mm
Cross-sectional area	Ac=411675 mm²
Centroid above soffit	Yb=595 mm
Section modulus top	Zt=113.14E6 mm³
Section modulus bottom	Zb=157.87E6 mm³
Unit weight of beam	uwb=24 kN/m³

Concrete compressive strengths

Characteristic cylinder strength	fcki=32 N/mm² (transfer)
Characteristic cylinder strength	fck=40 N/mm²

Concrete moduli (short-term)

Concrete modulus of elasticity	Ecmi=33 kN/mm² (transfer)
Concrete modulus of elasticity	Ecmb=35 kN/mm²

Composite section properties

Char strength (in-situ concrete)	fckc=25 N/mm²
Short-term modulus of elasticity for in-situ concrete	Ecmc=31 kN/mm²

Item No. 1

Item weighting	iw1=0.88571
X co-ordinate	X(1)=445 mm
Y co-ordinate	Y(1)=0 mm
X co-ordinate	X(2)=1055 mm
Y co-ordinate	Y(2)=0 mm
X co-ordinate	X(3)=1055 mm
Y co-ordinate	Y(3)=200 mm
X co-ordinate	X(4)=825 mm
Y co-ordinate	Y(4)=430 mm
X co-ordinate	X(5)=825 mm
Y co-ordinate	Y(5)=1120 mm
X co-ordinate	X(6)=930 mm
Y co-ordinate	Y(6)=1225 mm
X co-ordinate	X(7)=930 mm
Y co-ordinate	Y(7)=1425 mm
X co-ordinate	X(8)=1500 mm
Y co-ordinate	Y(8)=1425 mm
X co-ordinate	X(9)=1500 mm

Y co-ordinate	Y(9)=1605 mm
X co-ordinate	X(10)=0 mm
Y co-ordinate	Y(10)=1605 mm
X co-ordinate	X(11)=0 mm
Y co-ordinate	Y(11)=1425 mm
X co-ordinate	X(12)=570 mm
Y co-ordinate	Y(12)=1425 mm
X co-ordinate	X(13)=570 mm
Y co-ordinate	Y(13)=1225 mm
X co-ordinate	X(14)=675 mm
Y co-ordinate	Y(14)=1120 mm
X co-ordinate	X(15)=675 mm
Y co-ordinate	Y(15)=430 mm
X co-ordinate	X(16)=445 mm
Y co-ordinate	Y(16)=200 mm
X co-ordinate	X(17)=445 mm
Y co-ordinate	Y(17)=0 mm

Item No. 2

Second moment of area	IXX2=93.933E9 mm^4
Area of item	A2=411675 mm^2
Centroid from X-X axis	YC2=595 mm
Item weighting	iw2=0.11429
Depth of composite section	di=1605 mm
Modulus of elasticity (strand)	Ep=195 kN/mm^2

Cross-section 1

Distance from mid-span of beam	csd(1)=0 m
Number of layers of strand	nls(1)=5
Height above soffit	ds(1)=40 mm
Number of strands	ns(1)=14
Height above soffit	ds(2)=80 mm
Number of strands	ns(2)=14
Height above soffit	ds(3)=120 mm
Number of strands	ns(3)=2
Height above soffit	ds(4)=160 mm
Number of strands	ns(4)=2
Height above soffit	ds(5)=1385 mm
Number of strands	ns(5)=4

Short Term Losses (BS EN 1992-1-1)

Relaxation at transfer (%)	str=1

Summary

Loss	Loss of Force kN	% Loss
Relaxation Elastic Shortening	57.24 593.64	1 10.371
Transfer Total	650.88	11.371

Losses at Transfer

Initial force 5724 kN
Force at transfer Pt=P0-loft=5073.1 kN

Loading	Stresses at Transfer N/mm²		
	Top of Beam	Bottom of Beam	Centroid of Strands
Prestress Self weight of Beam	-4.6612 6.2858	24.499 -4.5061	20.076 -2.8694
Total	1.6246	19.993	17.207

Beam Concrete Stresses at Transfer

Stress Limitations (BS EN 1992-1-1, Clause 5.10.2.2)

Top of beam:
Compressive stress 1.6246 N/mm² is less than allowable stresses of 0.7*fcki=22.4 N/mm² and 0.6*fck=24 N/mm².
Bottom of beam:
Compressive stress 19.993 N/mm² is less than allowable stresses of 0.7*fcki=22.4 N/mm² and 0.6*fck=24 N/mm².

Long Term Losses (BS EN 1992-1-1, Clause 5.10.6(1))

Relaxation after transfer(%) slr(1)=1
Shrinkage per unit length sul(1)=0.3E-3
Creep coefficient φ(∞,to) crf=1.8

Summary

Loss	Loss of Force kN	% Loss
Relaxation Elastic Shortening	57.24 593.64	1 10.371
Transfer Total	650.88	11.371
Relaxation Shrinkage Creep	57.24 292.73 1122.3	1 5.1142 19.607
Long-term Total	1472.3	25.721
All Losses	2123.2	37.092

Losses - Long term

Initial force 5724 kN
Final force Pf=P0-loftl=3600.8 kN
Unit-weight of in-situ concrete wc=25 kN/m³

Loading	Final Stresses N/mm²		
	Top of Beam	Bottom of Beam	Centroid of Strands
Prestress Self weight of Beam In-situ concrete	-3.3085 6.2858 4.2944	17.389 -4.5061 -3.0785	14.25 -2.8694 -1.9603
Total	7.2717	9.8043	9.4202

Beam concrete stresses - Long term

Composite section

Height from beam soffit to
bottom of in-situ concrete hsis=1425 mm
Perc'age of shrinkage remaining ps=25 %
Percentage pcr=25 %
Percentage stT=50 %
The net moment is Mc=F*e/1E3-Mb=-462.11 kNm
Stress at top of in-situ concrete:
ftisds=-(F/(Ai*mr)-F/(Ai*mr+Ac)-Mc*1E3*(di-Yc)/Ic)*mr*1E3
=-0.28831 N/mm²
Stress at bottom of in-situ concrete:
fbisds=-(F/(Ai*mr)-F/(Ai*mr+Ac)-Mc*1E3*(hsis-Yc)/Ic)*mr*1E3
=0.042621 N/mm²

Stress at top of precast concrete beam:
ftpbds=(F/(Ai*mr+Ac)+Mc*1E3*(d-Yc)/Ic+Mb*1E3*Yt/Iyy)*1E3=0.3622 N/mm²
Stress at bottom of precast concrete beam:
fbpbds=(F/(Ai*mr+Ac)-Mc*1E3*Yc/Ic-Mb*1E3*Yb/Iyy)*1E3=-0.12167 N/mm²

Loading Combination 1

(no tensile stress permitted in precast beam)
Characteristic bending moment c1b(1)=2300 kNm

Loading	Loading Combination 1 Stresses N/mm²			
	Top of in-situ	Top of Beam	Bottom of in-situ	Bottom of Beam
Prestress,beam and in-situ	0	7.2717	0	9.8043
Dif. shrinkage	-0.28831	0.3622	0.042621	-0.12167
Combination 1	6.4166	5.304	4.6979	-9.6389
Total	6.1282	12.938	4.7405	0.043691

Loading Combination 1 - Stresses

Loading Combination 2

(tensile stress permitted (no visible cracking))
Characteristic bending moment c2b(1)=2600 kNm

Loading	Loading Combination 2 Stresses N/mm²			
	Top of in-situ	Top of Beam	Bottom of in-situ	Bottom of Beam
Prestress, beam and in-situ	0	7.2717	0	9.8043
Dif. shrinkage	-0.28831	0.3622	0.042621	-0.12167
Combination 2	6.9513	5.746	5.0893	-10.896
Total	6.663	13.38	5.132	-1.2136

Loading Combination 2 - Stresses

NOTE: The stresses from temperature differences should be added to the total stresses.

Top of in-situ concrete:
Compressive stress 6.663 N/mm² is less than the maximum allowable stress of 0.6*fckc=15 N/mm².
Top of beam:
Compressive stress 13.38 N/mm² is less than the maximum allowable stress of 0.6*fck=24 N/mm².

Bottom of in-situ concrete:
Compressive stress 5.132 N/mm² is less than the maximum allowable stress of 0.6*fckc=15 N/mm².
Bottom of beam:
Tensile stress 1.2136 N/mm² is less than the maximum allowable tensile stress of 3.0263 N/mm².

Location: Ex2 - 20 metre span beam

Precast prestressed concrete beam with non-standard section

Calculations for stresses at the Serviceability Limit State (SLS) in accordance with BS EN 1992-2:2005 and NA to BS EN 1992-2:2005.

Beam span under consideration span=20 m

Beam section properties

Depth of beam	d=1040 mm
Cross-sectional area	Ac=387050 mm²
Centroid above soffit	Yb=409 mm
Section modulus top	Zt=75.39E6 mm³
Section modulus bottom	Zb=116.23E6 mm³
Unit weight of beam	uwb=24 kN/m³

Concrete compressive strengths

Characteristic cylinder strength	fcki=32 N/mm² (transfer)
Characteristic cylinder strength	fck=40 N/mm²

Concrete moduli (short-term)

Concrete modulus of elasticity	Ecmi=33 kN/mm² (transfer)
Concrete modulus of elasticity	Ecmb=35 kN/mm²

Composite section properties

Char strength (in-situ concrete)	fckc=32 N/mm²
Short-term modulus of elasticity for in-situ concrete	Ecmc=33 kN/mm²
Depth of composite section	di=1165 mm
Area of in-situ concrete	Ai=229500 mm²
Centroid of in-situ concrete	Yi=1087.9 mm
Centroid of composite section	Yc=661.69 mm
Second moment of area	Ic=114.4E9 mm⁴
Modulus of elasticity (strand)	Ep=195 kN/mm²

Cross-section 1

Distance from mid-span of beam	csd(1)=0 m
Number of layers of strand	nls(1)=4
Height above soffit	ds(1)=60 mm
Number of strands	ns(1)=11
Height above soffit	ds(2)=110 mm
Number of strands	ns(2)=14
Height above soffit	ds(3)=880 mm
Number of strands	ns(3)=2
Height above soffit	ds(4)=930 mm
Number of strands	ns(4)=2

Short Term Losses (BS EN 1992-1-1)

Relaxation at transfer (%) str=1

Summary

Loss	Loss of Force kN	% Loss
Relaxation Elastic Shortening	50.46 384.06	1 7.6112
Transfer Total	434.52	8.6112

Losses at Transfer

Initial force 5046 kN
Force at transfer Pt=P0-loft=4611.5 kN

Loading	Stresses at Transfer N/mm²		
	Top of Beam	Bottom of Beam	Centroid of Strands
Prestress Self weight of Beam	-0.83642 6.165	20.179 -3.996	16.124 -2.0352
Total	5.3286	16.183	14.089

Beam Concrete Stresses at Transfer

Stress Limitations (BS EN 1992-1-1, Clause 5.10.2.2)

Top of beam:
Compressive stress 5.3286 N/mm² is less than allowable stresses of 0.7*fcki=22.4 N/mm² and 0.6*fck=24 N/mm².
Bottom of beam:
Compressive stress 16.183 N/mm² is less than allowable stresses of 0.7*fcki=22.4 N/mm² and 0.6*fck=24 N/mm².

Long Term Losses (BS EN 1992-1-1, Clause 5.10.6(1))

Relaxation after transfer(%) slr(1)=2
Shrinkage per unit length sul(1)=0.3E-3
Creep coefficient φ(∞,to) crf=1.8

Summary

Loss	Loss of Force kN	% Loss
Relaxation Elastic Shortening	50.46 384.06	1 7.6112
Transfer Total	434.52	8.6112
Relaxation Shrinkage Creep	100.92 235.81 619.18	2 4.6733 12.271
Long-term Total	955.92	18.944
All Losses	1390.4	27.555

Losses - Long term

Initial force 5046 kN
Final force Pf=P0-loftl=3655.6 kN
Unit-weight of in-situ concrete wc=24 kN/m³

Loading	Final Stresses N/mm²		
	Top of Beam	Bottom of Beam	Centroid of Strands
Prestress Self weight of Beam In-situ concrete	-0.66303 6.165 3.6555	15.996 -3.996 -2.3694	12.781 -2.0352 -1.2068
Total	9.1576	9.6308	9.5395

Beam concrete stresses - Long term

Composite section

Height from beam soffit to
bottom of in-situ concrete hsis=1005 mm
Perc'age of shrinkage remaining ps=25 %
Percentage pcr=25 %
Percentage stT=67 %
The net moment is Mc=F*e/1E3-Mb=-119.61 kNm
Stress at top of in-situ concrete:
ftisds=-(F/(Ai*mr)-F/(Ai*mr+Ac)-Mc*1E3*(di-Yc)/Ic)*mr*1E3
=0.0028135 N/mm²
Stress at bottom of in-situ concrete:
fbisds=-(F/(Ai*mr)-F/(Ai*mr+Ac)-Mc*1E3*(hsis-Yc)/Ic)*mr*1E3
=0.17009 N/mm²

Stress at top of precast concrete beam:
ftpbds=(F/(Ai*mr+Ac)+Mc*1E3*(d-Yc)/Ic+Mb*1E3*Yt/Iyy)*1E3
=-0.21575 N/mm²
Stress at bottom of precast concrete beam:
fbpbds=(F/(Ai*mr+Ac)-Mc*1E3*Yc/Ic-Mb*1E3*Yb/Iyy)*1E3=0.058269 N/mm²

Loading Combination 1

(no tensile stress permitted in precast beam)
Characteristic bending moment c1b(1)=1446 kNm

Loading	Loading Combination 1 Stresses N/mm²			
	Top of in-situ	Top of Beam	Bottom of in-situ	Bottom of Beam
Prestress,beam and in-situ	0	9.1576	0	9.6308
Dif. shrinkage	0.0028135	-0.21575	0.17009	0.058269
Combination 1	9.1291	6.8618	6.227	-8.3637
Total	9.1319	15.804	6.3971	1.3254

Loading Combination 1 - Stresses

Loading Combination 2

(tensile stress permitted (no visible cracking))
Characteristic bending moment c2b(1)=1907 kNm

Loading	Loading Combination 2 Stresses N/mm²			
	Top of in-situ	Top of Beam	Bottom of in-situ	Bottom of Beam
Prestress, beam and in-situ	0	9.1576	0	9.6308
Dif. shrinkage	0.0028135	-0.21575	0.17009	0.058269
Combination 2	8.39	6.3063	5.7228	-11.03
Total	8.3928	15.248	5.8929	-1.3411

Loading Combination 2 - Stresses

NOTE: The stresses from temperature differences should be added to the total stresses.

Top of in-situ concrete:
Compressive stress 8.3928 N/mm² is less than the maximum allowable stress of 0.6*fckc=19.2 N/mm².
Top of beam:
Compressive stress 15.248 N/mm² is less than the maximum allowable stress of 0.6*fck=24 N/mm².

Bottom of in-situ concrete:
Compressive stress 5.8929 N/mm² is less than the maximum allowable stress of 0.6*fckc=19.2 N/mm².
Bottom of beam:
Tensile stress 1.3411 N/mm² is less than the maximum allowable tensile stress of 3.0263 N/mm².

Location: Ex3 - 13.5 metre span solid edge beam

Precast prestressed concrete beam with non-standard section

Calculations for stresses at the Serviceability Limit State (SLS) in accordance with BS EN 1992-2:2005 and NA to BS EN 1992-2:2005.

Beam span under consideration span=13.5 m

Beam section properties

Depth of beam	d=615 mm
Cross-sectional area	Ac=130675 mm²
Centroid above soffit	Yb=244 mm
Section modulus top	Zt=14.3E6 mm³
Section modulus bottom	Zb=21.81E6 mm³
Unit weight of beam	uwb=25 kN/m³

Concrete compressive strengths

Characteristic cylinder strength	fcki=32 N/mm² (transfer)
Characteristic cylinder strength	fck=40 N/mm²

Concrete moduli (short-term)

Concrete modulus of elasticity	Ecmi=33 kN/mm² (transfer)
Concrete modulus of elasticity	Ecmb=35 kN/mm²

Composite section properties

Char strength (in-situ concrete)	fckc=28 N/mm²
Short-term modulus of elasticity for in-situ concrete	Ecmc=32 kN/mm²

Item No. 1

Item weighting	iw1=0.91429
X co-ordinate	X(1)=0 mm
Y co-ordinate	Y(1)=0 mm
X co-ordinate	X(2)=508 mm
Y co-ordinate	Y(2)=0 mm
X co-ordinate	X(3)=508 mm
Y co-ordinate	Y(3)=250 mm
X co-ordinate	X(4)=650 mm
Y co-ordinate	Y(4)=350 mm
X co-ordinate	X(5)=650 mm
Y co-ordinate	Y(5)=790 mm
X co-ordinate	X(6)=150 mm
Y co-ordinate	Y(6)=790 mm
X co-ordinate	X(7)=150 mm
Y co-ordinate	Y(7)=690 mm
X co-ordinate	X(8)=0 mm
Y co-ordinate	Y(8)=690 mm
X co-ordinate	X(9)=0 mm

Y co-ordinate Y(9)=0 mm

Item No. 2

Second moment of area IXX2=5.3216E9 mm⁴
Area of item A2=130675 mm²
Centroid from X-X axis YC2=244 mm
Item weighting iw2=0.085714
Depth of composite section di=790 mm
Nominal diameter nomd=12 mm
Nominal tensile strength nomt=1700 N/mm²
Nominal steel area noma=100 mm²
Char breaking load (strand) fpk=150 kN
Initial force per strand ipf=150 kN
Modulus of elasticity (strand) Ep=195 kN/mm²

Cross-section 1

Distance from mid-span of beam csd(1)=2 m
Number of layers of strand nls(1)=4
Height above soffit ds(1)=49 mm
Number of strands ns(1)=10
Height above soffit ds(2)=85 mm
Number of strands ns(2)=8
Height above soffit ds(3)=520 mm
Number of strands ns(3)=2
Height above soffit ds(4)=580 mm
Number of strands ns(4)=2
Bending moment from temp.loads tlb(1)=80 kNm
Bending moment from other loads olb(1)=50 kNm

Short Term Losses (BS EN 1992-1-1)

Relaxation at transfer (%) str=1

Summary

Loss	Loss of Force kN	% Loss
Relaxation	33	1
Elastic Shortening	349.08	10.578
Transfer Total	382.08	11.578

Losses at Transfer

Initial force 3300 kN
Force at transfer Pt=P0-loft=2917.9 kN

Loading	Stresses at Transfer N/mm²		
	Top of Beam	Bottom of Beam	Centroid of Strands
Prestress	3.855	34.48	26.852
Self weight of Beam	4.733	-3.1128	-1.1586
Temporary Loads	5.5772	-3.668	-1.3653
Other Loads	3.4858	-2.2925	-0.85329
Total	17.651	25.407	23.475

Beam Concrete Stresses at Transfer

Stress Limitations (BS EN 1992-1-1, Clause 5.10.2.2)

Top of beam:
Compressive stress 17.651 N/mm² is less than allowable stresses of 0.7*fcki=22.4 N/mm² and 0.6*fck=24 N/mm².
Bottom of beam:

WARNING:
Compressive stress 25.407 N/mm² exceeds maximum allowable stress of 0.7*fcki=22.4 N/mm².

Long Term Losses (BS EN 1992-1-1, Clause 5.10.6(1))

Relaxation after transfer(%) slr(1)=1.5
Shrinkage per unit length sul(1)=0.3E-3
Creep coefficient φ(∞,to) crf=1.9

WARNING:
Maximum stress at transfer exceeds 20 N/mm²

Summary

Loss	Loss of Force kN	% Loss
Relaxation Elastic Shortening	33 349.08	1 10.578
Transfer Total	382.08	11.578
Relaxation Shrinkage Creep	49.5 128.7 723.12	1.5 3.9 21.913
Long-term Total	901.32	27.313
All Losses	1283.4	38.891

Losses - Long term

Initial force 3300 kN
Final force Pf=P0-loftl=2016.6 kN
Unit-weight of in-situ concrete wc=25 kN/m³

Loading	Final Stresses N/mm²		
	Top of Beam	Bottom of Beam	Centroid of Strands
Prestress Self weight of Beam In-situ concrete	2.6642 4.733 11.779	23.83 -3.1128 -7.7471	18.558 -1.1586 -2.8835
Total	19.177	12.97	14.516

Beam concrete stresses - Long term

Composite section

Height from beam soffit to
bottom of in-situ concrete hsis=100 mm
Perc'age of shrinkage remaining ps=40 %

WARNING:
Maximum stress at transfer exceeds 20 N/mm²

Percentage pcr=40 %
Percentage stT=50 %
The net moment is Mc=F*e/1E3-Mb=-258.58 kNm
Stress at top of in-situ concrete:
ftisds=-(F/(Ai*mr)-F/(Ai*mr+Ac)-Mc*1E3*(di-Yc)/Ic)*mr*1E3
=-0.76411 N/mm²

Stress at bottom of in-situ concrete:
fbisds=-(F/(Ai*mr)-F/(Ai*mr+Ac)-Mc*1E3*(hsis-Yc)/Ic)*mr*1E3
=7.0621 N/mm²
Stress at top of precast concrete beam:
ftpbds=(F/(Ai*mr+Ac)+Mc*1E3*(d-Yc)/Ic+Mb*1E3*Yt/Iyy)*1E3
=-12.423 N/mm²
Stress at bottom of precast concrete beam:
fbpbds=(F/(Ai*mr+Ac)-Mc*1E3*Yc/Ic-Mb*1E3*Yb/Iyy)*1E3=-3.573 N/mm²

Loading Combination 1

(no tensile stress permitted in precast beam)
Characteristic bending moment c1b(1)=550 kNm

Loading	Loading Combination 1 Stresses N/mm²			
	Top of in-situ	Top of Beam	Bottom of in-situ	Bottom of Beam
Prestress,beam and in-situ	0	19.177	0	12.97
Dif. shrinkage	-0.76411	-12.423	7.0621	-3.573
Combination 1	10.207	6.1268	-7.2898	-10.612
Total	9.4433	12.88	-0.22774	-1.2154

Loading Combination 1 - Stresses

WARNING:
Bottom of beam:
Tensile stress 1.2154 N/mm² exceeds maximum allowable tensile stress of 0 N/mm².

Loading Combination 2

(tensile stress permitted (no visible cracking))
Characteristic bending moment c2b(1)=625 kNm

Loading	Loading Combination 2 Stresses N/mm²			
	Top of in-situ	Top of Beam	Bottom of in-situ	Bottom of Beam
Prestress, beam and in-situ	0	19.177	0	12.97
Dif. shrinkage	-0.76411	-12.423	7.0621	-3.573
Combination 2	10.633	6.3821	-8.2839	-12.059
Total	9.8686	13.135	-1.2218	-2.6625

Loading Combination 2 - Stresses

NOTE: The stresses from temperature differences should be added to the total stresses.

Top of in-situ concrete:
Compressive stress 9.8686 N/mm² is less than the maximum allowable stress of 0.6*fckc=16.8 N/mm².
Top of beam:
Compressive stress 13.135 N/mm² is less than the maximum allowable stress of 0.6*fck=24 N/mm².
Bottom of in-situ concrete:
Tensile stress 1.2218 N/mm² is less than the maximum allowable tensile stress of 2.7656 N/mm² (EN 1992-1-1 expression 3.23)
Bottom of beam:
Tensile stress 2.6625 N/mm² is less than the maximum allowable tensile stress of 3.0263 N/mm².

Location: Ex4 - 17.0 metre span solid section

Precast prestressed concrete beam with non-standard section

Calculations for stresses at the Serviceability Limit State (SLS) in accordance with BS EN 1992-2:2005 and NA to BS EN 1992-2:2005.

Beam span under consideration span=17 m

Beam section properties

Depth of beam	d=775 mm
Cross-sectional area	Ac=163360 mm²
Centroid above soffit	Yb=334 mm
Section modulus top	Zt=24.31E6 mm³
Section modulus bottom	Zb=32.1E6 mm³
Unit weight of beam	uwb=25 kN/m³

Concrete compressive strengths

Characteristic cylinder strength	fcki=28 N/mm² (transfer)
Characteristic cylinder strength	fck=32 N/mm²

Concrete moduli (short-term)

Concrete modulus of elasticity	Ecmi=32 kN/mm² (transfer)
Concrete modulus of elasticity	Ecmb=33 kN/mm²

Composite section properties

Char strength (in-situ concrete)	fckc=30 N/mm²
Short-term modulus of elasticity for in-situ concrete	Ecmc=32 kN/mm²
Depth of composite section	di=850 mm
Area of in-situ concrete	Ai=304140 mm²
Centroid of composite section	Yc=425 mm
Second moment of area	Ic=28.147E9 mm⁴
Modulus of elasticity (strand)	Ep=195 kN/mm²

Cross-section 1

Distance from mid-span of beam	csd(1)=6 m
Number of layers of strand	nls(1)=6
Height above soffit	ds(1)=50 mm
Number of strands	ns(1)=4
Height above soffit	ds(2)=90 mm
Number of strands	ns(2)=3
Height above soffit	ds(3)=260 mm
Number of strands	ns(3)=1
Height above soffit	ds(4)=500 mm
Number of strands	ns(4)=1
Height above soffit	ds(5)=620 mm
Number of strands	ns(5)=1
Height above soffit	ds(6)=740 mm

Number of strands ns(6)=1

Short Term Losses (BS EN 1992-1-1)

Relaxation at transfer (%) str=1

Summary

Loss	Loss of Force kN	% Loss
Relaxation Elastic Shortening	22 207.04	1 9.4107
Transfer Total	229.04	10.411

Losses at Transfer

Initial force 2200 kN
Force at transfer Pt=P0-loft=1971 kN

Loading	Stresses at Transfer N/mm²		
	Top of Beam	Bottom of Beam	Centroid of Strands
Prestress Self weight of Beam	4.076 3.0447	18.116 -2.306	13.85 -0.68038
Total	7.1207	15.81	13.17

Beam Concrete Stresses at Transfer

Stress Limitations (BS EN 1992-1-1, Clause 5.10.2.2)

Top of beam:
Compressive stress 7.1207 N/mm² is less than allowable stresses of 0.7*fcki=19.6 N/mm² and 0.6*fck=19.2 N/mm².
Bottom of beam:
Compressive stress 15.81 N/mm² is less than allowable stresses of 0.7*fcki=19.6 N/mm² and 0.6*fck=19.2 N/mm².

Long Term Losses (BS EN 1992-1-1, Clause 5.10.6(1))

Relaxation after transfer(%) slr(1)=2
Shrinkage per unit length sul(1)=0.3E-3
Creep coefficient φ(∞,to) crf=2.2

Summary

Loss	Loss of Force kN	% Loss
Relaxation Elastic Shortening	22 207.04	1 9.4107
Transfer Total	229.04	10.411
Relaxation Shrinkage Creep	44 143.5 498.78	2 6.5228 22.672
Long-term Total	686.28	31.195
All Losses	915.32	41.605

Losses - Long term

Initial force 2200 kN
Final force Pf=P0-loftl=1284.7 kN
Unit-weight of in-situ concrete wc=25 kN/m³

Loading	Final Stresses N/mm²		
	Top of Beam	Bottom of Beam	Centroid of Strands
Prestress Self weight of Beam In-situ concrete	2.6567 3.0447 5.6686	11.808 -2.306 -4.2933	9.0278 -0.68038 -1.2667
Total	11.37	5.2088	7.0807

Beam concrete stresses - Long term

Composite section

Height from beam soffit to
bottom of in-situ concrete hsis=100 mm

Loading Combination 1

(no tensile stress permitted in precast beam)
Characteristic bending moment c1b(1)=200 kNm

Loading	Loading Combination 1 Stresses N/mm²			
	Top of in-situ	Top of Beam	Bottom of in-situ	Bottom of Beam
Prestress,beam and in-situ Combination 1	0 3.3973	11.37 2.7978	0 -2.3093	5.2088 -3.0199
Total	3.3973	14.168	-2.3093	2.1889

Loading Combination 1 - Stresses

Loading Combination 2

(tensile stress permitted (no visible cracking))
Characteristic bending moment c2b(1)=250 kNm

Loading	Loading Combination 2 Stresses N/mm²			
	Top of in-situ	Top of Beam	Bottom of in-situ	Bottom of Beam
Prestress, beam and in-situ Combination 2	0 3.7748	11.37 3.1087	0 -2.8866	5.2088 -3.7748
Total	3.7748	14.479	-2.8866	1.434

Loading Combination 2 - Stresses

NOTE: The stresses from temperature differences should be added to the total stresses.

Top of in-situ concrete:
Compressive stress 3.7748 N/mm² is less than the maximum allowable stress of 0.6*fckc=18 N/mm².
Top of beam:
Compressive stress 14.479 N/mm² is less than the maximum allowable stress of 0.6*fck=19.2 N/mm².
Bottom of in-situ concrete:
Tensile stress 2.8866 N/mm² is less than the maximum allowable tensile stress of 2.8958 N/mm² (EN 1992-1-1 expression 3.23)
Bottom of beam:
Compressive stress 1.434 N/mm² is less than the maximum allowable stress of 0.6*fck=19.2 N/mm².

Copyright 1986-2024 Fitzroy Systems Ltd.

Mix title: Example 1, Design of Normal Concrete Mixes

Copyright 1986-2024 Fitzroy Systems Ltd.

Mix title: Ex2 - Design of Normal Concrete Mixes

Location: Ex1 - Column on grid line C/12

Rectangular column interaction diagrams for uniaxial bending

The calculation produces a column interaction diagram and tabular results for axial load and uniaxial bending on a rectangular section. The analysis is in accordance with BS5400-4:1990 as implemented by DOT Standard BD 44/15. The method used is that described in Clause 5.5.3.2 with the stresses in the concrete in compression derived from the stress-strain curve in Figure 1. The axial force is assumed to act at the centroid of the gross concrete section.

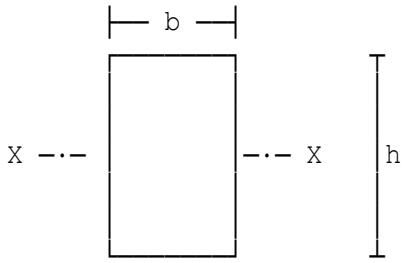

Rectangular column section

Consider bending about X-X the major axis.

Breadth of concrete section	b=350 mm
Depth of concrete section	h=450 mm
Char. strength of concrete	fcu=40 N/mm²
Number of layers of r'ment	n=2
Concrete material factor γm	gamc=1.50
Steel material factor γm	gams=1.15
Char. strength of reinforcement	fym=460 N/mm²
Young's modulus for r'ment	Em=200000 N/mm²
Area of reinforcement	A(1)=1608.5 mm²
Depth from compression face	d(1)=60 mm
Area of reinforcement	A(2)=981.75 mm²
Depth from compression face	d(2)=390 mm

Copyright 1986-2024 Fitzroy Systems Ltd.

Tabular Results

Depth to Neutral Axis (mm)	Moment Capacity (kNm)	Axial Load Capacity (kN)
∞	32.624	3631.1
742.5	34.451	3620.1
720	34.761	3618.2
697.5	36.63	3606.9
675	38.786	3593.9
652.5	41.273	3579.1
630	44.293	3561.6
607.5	48.091	3540.1
585	52.955	3512.9
562.5	59.238	3478.2
540	67.394	3433.3
517.5	77.99	3374.6
495	91.74	3297.9
472.5	109.55	3197.4
450	132.59	3065.3
427.5	157.65	2913.2
405	180.65	2758.6
382.5	201.96	2599.3
360	222.17	2431.6
337.5	240.86	2258.1
315	258.25	2077.6
292.5	274.6	1888.3
270	290.27	1688.1
247.5	294.56	1541.9
225	295.66	1400
202.5	294.95	1254.1
180	292.23	1105.5
157.5	282.93	981.62
135	270.66	854.8
112.5	253.66	714.27
90	213.66	449.39
67.5	155.41	88.908
62.661	140.68	0

Graphical Results

Axial Load (kN)	Moment (kNm)	Depth to Neutral Axis (mm)
3631.1	32.624	∞
3620.1	34.451	742.5
3618.2	34.761	720
3606.9	36.63	697.5
3593.9	38.786	675
3579.1	41.273	652.5
3561.6	44.293	630
3540.1	48.091	607.5
3512.9	52.955	585
3478.2	59.238	562.5
3433.3	67.394	540
3374.6	77.99	517.5
3297.9	91.74	495
3197.4	109.55	472.5
3065.3	132.59	450
2913.2	157.65	427.5
2758.6	180.65	405
2599.3	201.96	382.5
2431.6	222.17	360
2258.1	240.86	337.5
2077.6	258.25	315
1888.3	274.6	292.5
1688.1	290.27	270
1541.9	294.56	247.5
1400	295.66	225
1254.1	294.95	202.5
1105.5	292.23	180
981.62	282.93	157.5
854.8	270.66	135
714.27	253.66	112.5
449.39	213.66	90
88.908	155.41	67.5
0	140.68	62.661

Location: Ex1 - Column on grid line C/12

Rectangular column interaction diagrams for uniaxial bending

The calculation produces a column interaction diagram and tabular results for axial load and uniaxial bending on a rectangular section. The analysis is in accordance with BS EN 1992-2:2005 and the NA to BS EN 1992-2:2005 and utilises the stresses in the concrete in compression derived from the stress-strain curve in Figure 3.3. The axial force is assumed to act at the centroid of the gross concrete section.

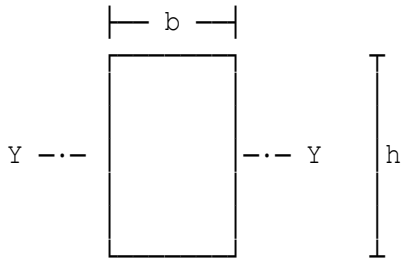

Rectangular column section

Consider bending about Y-Y the major axis.

Breadth of concrete section	b=350 mm
Depth of concrete section	h=450 mm
Number of layers of r'ment	n=2

The calculations utilise the following material factors which are in accordance with BS EN 1992-1-1 (Table 2.1N):

Concrete material factor γc	gamc=1.50
Steel material factor γs	gams=1.15
Char. strength of reinforcement	fyk=500 N/mm²
Young's modulus for r'ment	Em=200000 N/mm²
Area of reinforcement	A(1)=1608.5 mm²
Depth from compression face	d(1)=60 mm
Area of reinforcement	A(2)=981.75 mm²
Depth from compression face	d(2)=390 mm

Copyright 1986-2024 Fitzroy Systems Ltd.

Tabular Results

Depth to Neutral Axis (mm)	Moment Capacity (kNm)	Axial Load Capacity (kN)
∞	35.058	3734.1
787.5	36.408	3725.9
765	37.327	3720.4
742.5	39.079	3709.8
720	40.94	3698.5
697.5	42.997	3686.1
675	45.44	3671.8
652.5	48.196	3655.7
630	51.465	3636.8
607.5	55.45	3614.2
585	60.524	3585.8
562.5	66.998	3549.7
540	75.326	3503.4
517.5	86.075	3443.4
495	99.958	3365.4
472.5	117.88	3263.5
450	141.01	3130
427.5	166.15	2976.6
405	189.21	2820.7
382.5	210.56	2660
360	230.78	2491
337.5	249.47	2316.2
315	266.83	2134.3
292.5	283.14	1943.6
270	298.76	1742.1
247.5	306.82	1571.2
225	308.04	1426.7
202.5	307.47	1277.8
180	305.38	1123.1
157.5	296.45	994.74
135	283.97	866.37
112.5	261.97	695.35
90	220.35	420.62
67.5	161.87	58.792
64.017	152.13	0

Graphical Results

Axial Load (kN)	Moment (kNm)	Depth to Neutral Axis (mm)
3734.1	35.058	∞
3725.9	36.408	787.5
3720.4	37.327	765
3709.8	39.079	742.5
3698.5	40.94	720
3686.1	42.997	697.5
3671.8	45.44	675
3655.7	48.196	652.5
3636.8	51.465	630
3614.2	55.45	607.5
3585.8	60.524	585
3549.7	66.998	562.5
3503.4	75.326	540
3443.4	86.075	517.5
3365.4	99.958	495
3263.5	117.88	472.5
3130	141.01	450
2976.6	166.15	427.5
2820.7	189.21	405
2660	210.56	382.5
2491	230.78	360
2316.2	249.47	337.5
2134.3	266.83	315
1943.6	283.14	292.5
1742.1	298.76	270
1571.2	306.82	247.5
1426.7	308.04	225
1277.8	307.47	202.5
1123.1	305.38	180
994.74	296.45	157.5
866.37	283.97	135
695.35	261.97	112.5
420.62	220.35	90
58.792	161.87	67.5
0	152.13	64.017

Copyright 1986-2024 Fitzroy Systems Ltd.

Location: Ex1 - Column A

Rectangular column interaction diagrams for uniaxial bending

Breadth of concrete section	b=350 mm
Depth of concrete section	h=450 mm
Strength of concrete	fcu=40 N/mm²
Number of layers of reinforcement	n=2
Strength of reinforcement	fym=460 N/mm²
Young's modulus for reinforcement	Em=200000 N/mm²
Area of reinforcement	A(1)=1608.5 mm²
Depth from compression face	d(1)=60 mm
Area of reinforcement	A(2)=981.75 mm²
Depth from compression face	d(2)=390 mm
Factor for reinforcement	gms=1.15
Factor for concrete	gmc=1.5

Copyright 1986-2024 Fitzroy Systems Ltd.

Tabular Results

Depth to Neutral Axis (mm)	Moment Capacity (kNm)	Axial Load Capacity (KN)
∞	32.624	3631.1
742.5	34.451	3620.1
720	34.761	3618.2
697.5	36.63	3606.9
675	38.786	3593.9
652.5	41.273	3579.1
630	44.293	3561.6
607.5	48.091	3540.1
585	52.955	3512.9
562.5	59.238	3478.2
540	67.394	3433.3
517.5	77.99	3374.6
495	91.74	3297.9
472.5	109.55	3197.4
450	132.59	3065.3
427.5	157.65	2913.2
405	180.65	2758.6
382.5	201.96	2599.3
360	222.17	2431.6
337.5	240.86	2258.1
315	258.25	2077.6
292.5	274.6	1888.3
270	290.27	1688.1
247.5	294.56	1541.9
225	295.66	1400
202.5	294.95	1254.1
180	292.23	1105.5
157.5	282.93	981.62
135	270.66	854.8
112.5	253.66	714.27
90	213.66	449.39
67.5	155.41	88.908
62.661	140.68	0

Graphical Results

Axial Load (kN)	Moment (kNm)	Depth to Neutral Axis (mm)
3631.1	32.624	∞
3620.1	34.451	742.5
3618.2	34.761	720
3606.9	36.63	697.5
3593.9	38.786	675
3579.1	41.273	652.5
3561.6	44.293	630
3540.1	48.091	607.5
3512.9	52.955	585
3478.2	59.238	562.5
3433.3	67.394	540
3374.6	77.99	517.5
3297.9	91.74	495
3197.4	109.55	472.5
3065.3	132.59	450
2913.2	157.65	427.5
2758.6	180.65	405
2599.3	201.96	382.5
2431.6	222.17	360
2258.1	240.86	337.5
2077.6	258.25	315
1888.3	274.6	292.5
1688.1	290.27	270
1541.9	294.56	247.5
1400	295.66	225
1254.1	294.95	202.5
1105.5	292.23	180
981.62	282.93	157.5
854.8	270.66	135
714.27	253.66	112.5
449.39	213.66	90
88.908	155.41	67.5
0	140.68	62.661

Location: Ex1 - Column A

Circular column interaction diagrams for uniaxial bending

The calculation produces a column interaction diagram and tabular results for axial load and uniaxial bending on a circular section. The analysis is in accordance with BS5400-4:1990 as implemented by DOT Standard BD 44/15. The method used is that described in Clause 5.5.3.2 with the stresses in the concrete in compression derived from the stress-strain curve in Figure 1. The axial force is assumed to act at the centroid of the gross concrete section.

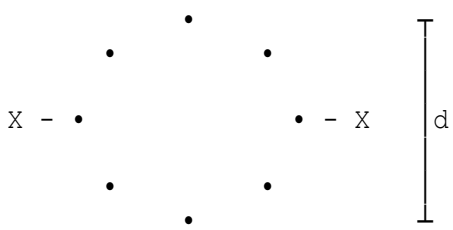

Circular column section

Bending about the X-X axis

Diameter of concrete section	d=900 mm
Char. strength of concrete	fcu=40 N/mm²
Total area of reinforcement	Ar=7977 mm²
Char. strength of reinforcement	fym=460 N/mm²
Young's modulus for r'ment	Em=200000 N/mm²
Concrete material factor γm	gamc=1.50
Steel material factor γm	gams=1.15
Number of bars	nob=16
Radial distance to centre of bars	dtc=62 mm

Tabular Results

Depth to Neutral Axis (mm)	Moment Capacity (kNm)	Axial Load Capacity (kN)
∞	0	13883
1575	6.8695	13885
1530	8.8319	13879
1485	12.531	13869
1440	19.662	13849
1395	29.278	13823
1350	39.126	13795
1305	50.809	13759
1260	65.373	13715
1215	83.129	13662
1170	105.71	13595
1125	135.21	13510
1080	175.27	13390
1035	229.39	13224
990	301	13002
945	395.67	12706
900	522.73	12314
855	675.31	11810
810	836.41	11221
765	997.81	10556
720	1151.7	9835.9
675	1295.6	9059.4
630	1426	8234.3
585	1542.4	7360
540	1625.6	6471.3
495	1667.9	5577.7
450	1670.3	4716
405	1651	3812.6
360	1590.6	2963.3
315	1493.5	2104.9
270	1354.8	1284
225	1182.1	454.8
197.86	1096.4	0

Graphical Results

Axial Load (kN)	Moment (kNm)	Depth to Neutral Axis (mm)
13883	0	∞
13885	6.8695	1575
13879	8.8319	1530
13869	12.531	1485
13849	19.662	1440
13823	29.278	1395
13795	39.126	1350
13759	50.809	1305
13715	65.373	1260
13662	83.129	1215
13595	105.71	1170
13510	135.21	1125
13390	175.27	1080
13224	229.39	1035
13002	301	990
12706	395.67	945
12314	522.73	900
11810	675.31	855
11221	836.41	810
10556	997.81	765
9835.9	1151.7	720
9059.4	1295.6	675
8234.3	1426	630
7360	1542.4	585
6471.3	1625.6	540
5577.7	1667.9	495
4716	1670.3	450
3812.6	1651	405
2963.3	1590.6	360
2104.9	1493.5	315
1284	1354.8	270
454.8	1182.1	225
0	1096.4	197.86

Location: Ex1 - Column on grid line A/2

Circular column interaction diagrams for uniaxial bending

The calculation produces a column interaction diagram and tabular results for axial load and uniaxial bending on a circular section. The analysis is in accordance with BS EN 1992-2:2005 and the NA to BS EN 1992-2:2005 and utilises the stresses in the concrete in compression derived from the stress-strain curve in Figure 3.3.

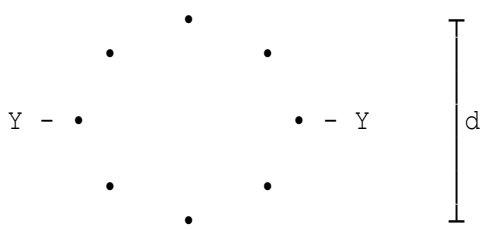

Circular column section

Consider bending about the Y-Y axis.

Diameter of concrete section	d=900 mm
Total area of reinforcement	Ar=7977 mm²
Char. strength of reinforcement	fyk=500 N/mm²
Young's modulus for r'ment	Em=200000 N/mm²

The calculations utilise the following material factors which are in accordance with BS EN 1992-1-1 (Table 2.1N):

Concrete material factor γc	gamc=1.50
Steel material factor γs	gams=1.15
Number of bars	nob=16
Radial distance to centre of bars	dtc=62 mm

Copyright 1986-2024 Fitzroy Systems Ltd.

Tabular Results

Depth to Neutral Axis (mm)	Moment Capacity (kNm)	Axial Load Capacity (kN)
∞	0	14240
1665	4.597	14249
1620	7.506	14241
1575	12.679	14227
1530	19.038	14209
1485	25.782	14190
1440	32.948	14170
1395	45.263	14135
1350	58.796	14095
1305	72.718	14052
1260	88.657	14004
1215	107.97	13946
1170	132.84	13870
1125	165.56	13767
1080	208	13635
1035	263.48	13463
990	336.31	13235
945	432.06	12932
900	560.03	12534
855	713.35	12009
810	875.01	11404
765	1036.8	10732
720	1190.9	10005
675	1334.7	9222
630	1464.8	8389.8
585	1579.7	7501.3
540	1672.8	6554.9
495	1715.9	5649.2
450	1723.7	4758.8
405	1706.4	3833
360	1651	2951.9
315	1548.5	2055.1
270	1409.5	1196.1
225	1235.3	358.85
205.15	1178.5	0

Graphical Results

Axial Load (kN)	Moment (kNm)	Depth to Neutral Axis (mm)
14240	0	∞
14249	4.597	1665
14241	7.506	1620
14227	12.679	1575
14209	19.038	1530
14190	25.782	1485
14170	32.948	1440
14135	45.263	1395
14095	58.796	1350
14052	72.718	1305
14004	88.657	1260
13946	107.97	1215
13870	132.84	1170
13767	165.56	1125
13635	208	1080
13463	263.48	1035
13235	336.31	990
12932	432.06	945
12534	560.03	900
12009	713.35	855
11404	875.01	810
10732	1036.8	765
10005	1190.9	720
9222	1334.7	675
8389.8	1464.8	630
7501.3	1579.7	585
6554.9	1672.8	540
5649.2	1715.9	495
4758.8	1723.7	450
3833	1706.4	405
2951.9	1651	360
2055.1	1548.5	315
1196.1	1409.5	270
358.85	1235.3	225
0	1178.5	205.15

Location: Ex2 - Column on grid line A/2

Circular column interaction diagrams for uniaxial bending

The calculation produces a column interaction diagram and tabular results for axial load and uniaxial bending on a circular section. The analysis is in accordance with BS EN 1992-2:2005 and the NA to BS EN 1992-2:2005 and utilises the stresses in the concrete in compression derived from the stress-strain curve in Figure 3.3.

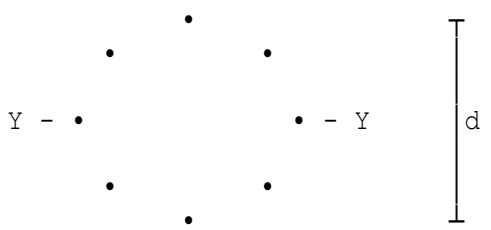

Circular column section

Consider bending about the Y-Y axis.

Diameter of concrete section	d=750 mm
Number of layers of r'ment	n=5
Char. strength of reinforcement	fyk=500 N/mm²
Young's modulus for r'ment	Em=200000 N/mm²
Area of reinforcement	A(1)=1000 mm²
Depth from compression face	d(1)=75 mm
Area of reinforcement	A(2)=2000 mm²
Depth from compression face	d(2)=225 mm
Area of reinforcement	A(3)=2000 mm²
Depth from compression face	d(3)=375 mm
Area of reinforcement	A(4)=2000 mm²
Depth from compression face	d(4)=525 mm
Area of reinforcement	A(5)=1000 mm²
Depth from compression face	d(5)=675 mm

Tabular Results

Depth to Neutral Axis (mm)	Moment Capacity (kNm)	Axial Load Capacity (kN)
∞	0	10723
1350	2.6786	10729
1312.5	5.1429	10721
1275	8.3193	10710
1237.5	11.688	10699
1200	15.603	10685
1162.5	21.18	10665
1125	27.203	10644
1087.5	33.357	10621
1050	40.493	10595
1012.5	52.12	10545
975	67.165	10481
937.5	86.293	10403
900	111.05	10303
862.5	143.4	10173
825	185.87	10002
787.5	241.58	9777.6
750	316.08	9485.3
712.5	405.28	9086
675	498.97	8626.2
637.5	593.04	8114
600	682.57	7559.4
562.5	765.34	6965.7
525	839.95	6334
487.5	907.03	5639.3
450	965.57	4898.8
412.5	986.91	4131.7
375	996.67	3300.8
337.5	986.76	2437.2
300	944.38	1624.4
262.5	880.02	751.37
224.89	819.52	0

Graphical Results

Axial Load (kN)	Moment (kNm)	Depth to Neutral Axis (mm)
10723	0	∞
10729	2.6786	1350
10721	5.1429	1312.5
10710	8.3193	1275
10699	11.688	1237.5
10685	15.603	1200
10665	21.18	1162.5
10644	27.203	1125
10621	33.357	1087.5
10595	40.493	1050
10545	52.12	1012.5
10481	67.165	975
10403	86.293	937.5
10303	111.05	900
10173	143.4	862.5
10002	185.87	825
9777.6	241.58	787.5
9485.3	316.08	750
9086	405.28	712.5
8626.2	498.97	675
8114	593.04	637.5
7559.4	682.57	600
6965.7	765.34	562.5
6334	839.95	525
5639.3	907.03	487.5
4898.8	965.57	450
4131.7	986.91	412.5
3300.8	996.67	375
2437.2	986.76	337.5
1624.4	944.38	300
751.37	880.02	262.5
0	819.52	224.89

Copyright 1986-2024 Fitzroy Systems Ltd.

Location: Ex1 - Column A

Circular column interaction diagrams for uniaxial bending

Diameter of concrete section	d=900 mm
Strength of concrete	fcu=40 N/mm²
Factor for reinforcement	gms=1.15
Factor for concrete	gmc=1.5
Total area of reinforcement	Ar=7977 mm²
Strength of reinforcement	fym=460 N/mm²
Youngs modulus for reinforcement	Em=200000 N/mm²
Number of bars	nob=16
Radial distance to centre of bars	dtc=62 mm

Copyright 1986-2024 Fitzroy Systems Ltd.

Tabular Results

Depth to Neutral Axis (mm)	Moment Capacity (kNm)	Axial Load Capacity (KN)
∞	0	13883
1575	6.8695	13885
1530	8.8319	13879
1485	12.531	13869
1440	19.662	13849
1395	29.278	13823
1350	39.126	13795
1305	50.809	13759
1260	65.373	13715
1215	83.129	13662
1170	105.71	13595
1125	135.21	13510
1080	175.27	13390
1035	229.39	13224
990	301	13002
945	395.67	12706
900	522.73	12314
855	675.31	11810
810	836.41	11221
765	997.81	10556
720	1151.7	9835.9
675	1295.6	9059.4
630	1426	8234.3
585	1542.4	7360
540	1625.6	6471.3
495	1667.9	5577.7
450	1670.3	4716
405	1651	3812.6
360	1590.6	2963.3
315	1493.5	2104.9
270	1354.8	1284
225	1182.1	454.8
197.86	1096.4	0

Graphical Results

Axial Load (kN)	Moment (kNm)	Depth to Neutral Axis (mm)
13883	0	∞
13885	6.8695	1575
13879	8.8319	1530
13869	12.531	1485
13849	19.662	1440
13823	29.278	1395
13795	39.126	1350
13759	50.809	1305
13715	65.373	1260
13662	83.129	1215
13595	105.71	1170
13510	135.21	1125
13390	175.27	1080
13224	229.39	1035
13002	301	990
12706	395.67	945
12314	522.73	900
11810	675.31	855
11221	836.41	810
10556	997.81	765
9835.9	1151.7	720
9059.4	1295.6	675
8234.3	1426	630
7360	1542.4	585
6471.3	1625.6	540
5577.7	1667.9	495
4716	1670.3	450
3812.6	1651	405
2963.3	1590.6	360
2104.9	1493.5	315
1284	1354.8	270
454.8	1182.1	225
0	1096.4	197.86

Location: Ex1 - Column A

Interaction diagrams for uniaxial bending of a general column section

The calculation produces a column interaction diagram and tabular results for axial load and uniaxial bending on a general column section. The analysis is in accordance with BS5400-4:1990 as implemented by DOT Standard BD 44/15. The method used is that described in Clause 5.5.3.2 with the stresses in the concrete in in compression derived from the stress-strain curve in Figure 1. The axial force is assumed to act at the centroid of the gross concrete section.

Char. strength of concrete	fcum=40 N/mm²
Number of cross-sections	ncs=2
Cross-section 1	
Cross-section 2	
Number of layers of reinforcement	n=2
Char. strength of reinforcement	fym=460 N/mm²
Young's modulus of reinforcement	Em=200000 N/mm²
Concrete material factor γm	gamc=1.50
Steel material factor γm	gams=1.15
Reinforcement layer 1 :	
Area of reinforcement	A(1)=1608.5 mm²
Depth from compression face	d(1)=60 mm
Reinforcement layer 2 :	
Area of reinforcement	A(2)=981.75 mm²
Depth from compression face	d(2)=390 mm

Tabular Results

Depth to Neutral Axis (mm)	Moment Capacity (kNm)	Axial Load Capacity (kN)
∞	32.624	3631.1
742.5	34.451	3620.1
720	34.761	3618.2
697.5	36.63	3606.9
675	38.786	3593.9
652.5	41.273	3579.1
630	44.293	3561.6
607.5	48.091	3540.1
585	52.955	3512.9
562.5	59.238	3478.2
540	67.394	3433.3
517.5	77.99	3374.6
495	91.74	3297.9
472.5	109.55	3197.4
450	132.59	3065.3
427.5	157.65	2913.2
405	180.65	2758.6
382.5	201.96	2599.3
360	222.17	2431.6
337.5	240.86	2258.1
315	258.25	2077.6
292.5	274.6	1888.3
270	290.27	1688.1
247.5	294.56	1541.9
225	295.66	1400
202.5	294.95	1254.1
180	292.23	1105.5
157.5	282.93	981.62
135	270.66	854.8
112.5	253.66	714.27
90	213.66	449.39
67.5	155.41	88.908
62.661	140.68	0

Graphical Results

Axial Load (kN)	Moment (kNm)	Depth to Neutral Axis (mm)
3631.1	32.624	∞
3620.1	34.451	742.5
3618.2	34.761	720
3606.9	36.63	697.5
3593.9	38.786	675
3579.1	41.273	652.5
3561.6	44.293	630
3540.1	48.091	607.5
3512.9	52.955	585
3478.2	59.238	562.5
3433.3	67.394	540
3374.6	77.99	517.5
3297.9	91.74	495
3197.4	109.55	472.5
3065.3	132.59	450
2913.2	157.65	427.5
2758.6	180.65	405
2599.3	201.96	382.5
2431.6	222.17	360
2258.1	240.86	337.5
2077.6	258.25	315
1888.3	274.6	292.5
1688.1	290.27	270
1541.9	294.56	247.5
1400	295.66	225
1254.1	294.95	202.5
1105.5	292.23	180
981.62	282.93	157.5
854.8	270.66	135
714.27	253.66	112.5
449.39	213.66	90
88.908	155.41	67.5
0	140.68	62.661

Location: Ex1 - Column A

Interaction diagrams for uniaxial bending of a general column section

The calculation produces a column interaction diagram and tabular results for axial load and uniaxial bending on a general column section. The analysis is in accordance with BS EN 1992-2:2005 and the NA to BS EN 1992-2:2005 and utilises the stresses in the concrete in compression derived from the stress-strain curve in Figure 3.3. The axial force is assumed to act at the centroid of the gross concrete section.

Number of cross-sections	ncs=2
Cross-section 1	
Cross-section 2	
Number of layers of r'ment	n=2
Char. strength of reinforcement	fyk=500 N/mm²
Young's modulus of r'ment	Em=200000 N/mm²

The calculations utilise the following material factors which are in accordance with BS EN 1992-1-1 (Table 2.1N):

Concrete material factor γm	gamc=1.50
Steel material factor γm	gams=1.15
Reinforcement layer 1 :	
Area of reinforcement	A(1)=1608.5 mm²
Depth from compression face	d(1)=60 mm
Reinforcement layer 2 :	
Area of reinforcement	A(2)=981.75 mm²
Depth from compression face	d(2)=390 mm

Tabular Results

Depth to Neutral Axis (mm)	Moment Capacity (kNm)	Axial Load Capacity (kN)
∞	35.058	3734.1
787.5	36.408	3725.9
765	37.327	3720.4
742.5	39.079	3709.8
720	40.94	3698.5
697.5	42.997	3686.1
675	45.44	3671.8
652.5	48.196	3655.7
630	51.465	3636.8
607.5	55.45	3614.2
585	60.524	3585.8
562.5	66.998	3549.7
540	75.326	3503.4
517.5	86.075	3443.4
495	99.958	3365.4
472.5	117.88	3263.5
450	141.01	3130
427.5	166.15	2976.6
405	189.21	2820.7
382.5	210.56	2660
360	230.78	2491
337.5	249.47	2316.2
315	266.83	2134.3
292.5	283.14	1943.6
270	298.76	1742.1
247.5	306.82	1571.2
225	308.04	1426.7
202.5	307.47	1277.8
180	305.38	1123.1
157.5	296.45	994.74
135	283.97	866.37
112.5	261.97	695.35
90	220.35	420.62
67.5	161.87	58.792
64.017	152.13	0

Graphical Results

Axial Load (kN)	Moment (kNm)	Depth to Neutral Axis (mm)
3734.1	35.058	∞
3725.9	36.408	787.5
3720.4	37.327	765
3709.8	39.079	742.5
3698.5	40.94	720
3686.1	42.997	697.5
3671.8	45.44	675
3655.7	48.196	652.5
3636.8	51.465	630
3614.2	55.45	607.5
3585.8	60.524	585
3549.7	66.998	562.5
3503.4	75.326	540
3443.4	86.075	517.5
3365.4	99.958	495
3263.5	117.88	472.5
3130	141.01	450
2976.6	166.15	427.5
2820.7	189.21	405
2660	210.56	382.5
2491	230.78	360
2316.2	249.47	337.5
2134.3	266.83	315
1943.6	283.14	292.5
1742.1	298.76	270
1571.2	306.82	247.5
1426.7	308.04	225
1277.8	307.47	202.5
1123.1	305.38	180
994.74	296.45	157.5
866.37	283.97	135
695.35	261.97	112.5
420.62	220.35	90
58.792	161.87	67.5
0	152.13	64.017

Copyright 1986-2024 Fitzroy Systems Ltd.

Location: Ex1 - Column A

Interaction diagrams for uniaxial bending of a general column section

Strength of concrete	fcum=40 N/mm²
Number of cross-sections	ncs=2
Cross-section 1	
Cross-section 2	
Number of layers of reinforcement	n=2
Strength of reinforcement	fym=460 N/mm²
Young's modulus of reinforcement	Em=200000 N/mm²
Layer 1 :	
Area of reinforcement	A(1)=1608.5 mm²
Depth from compression face	d(1)=60 mm
Layer 2 :	
Area of reinforcement	A(2)=981.75 mm²
Depth from compression face	d(2)=390 mm
Factor for reinforcement	gms=1.15
Factor for concrete	gmc=1.5

Copyright 1986-2024 Fitzroy Systems Ltd.

Tabular Results

Depth to Neutral Axis (mm)	Moment Capacity (kNm)	Axial Load Capacity (KN)
∞	32.624	3631.1
742.5	34.451	3620.1
720	34.761	3618.2
697.5	36.63	3606.9
675	38.786	3593.9
652.5	41.273	3579.1
630	44.293	3561.6
607.5	48.091	3540.1
585	52.955	3512.9
562.5	59.238	3478.2
540	67.394	3433.3
517.5	77.99	3374.6
495	91.74	3297.9
472.5	109.55	3197.4
450	132.59	3065.3
427.5	157.65	2913.2
405	180.65	2758.6
382.5	201.96	2599.3
360	222.17	2431.6
337.5	240.86	2258.1
315	258.25	2077.6
292.5	274.6	1888.3
270	290.27	1688.1
247.5	294.56	1541.9
225	295.66	1400
202.5	294.95	1254.1
180	292.23	1105.5
157.5	282.93	981.62
135	270.66	854.8
112.5	253.66	714.27
90	213.66	449.39
67.5	155.41	88.908
62.661	140.68	0

Graphical Results

Axial Load (kN)	Moment (kNm)	Depth to Neutral Axis (mm)
3631.1	32.624	∞
3620.1	34.451	742.5
3618.2	34.761	720
3606.9	36.63	697.5
3593.9	38.786	675
3579.1	41.273	652.5
3561.6	44.293	630
3540.1	48.091	607.5
3512.9	52.955	585
3478.2	59.238	562.5
3433.3	67.394	540
3374.6	77.99	517.5
3297.9	91.74	495
3197.4	109.55	472.5
3065.3	132.59	450
2913.2	157.65	427.5
2758.6	180.65	405
2599.3	201.96	382.5
2431.6	222.17	360
2258.1	240.86	337.5
2077.6	258.25	315
1888.3	274.6	292.5
1688.1	290.27	270
1541.9	294.56	247.5
1400	295.66	225
1254.1	294.95	202.5
1105.5	292.23	180
981.62	282.93	157.5
854.8	270.66	135
714.27	253.66	112.5
449.39	213.66	90
88.908	155.41	67.5
0	140.68	62.661

Location: Ex1 - Column A

Rectangular column interaction diagrams for biaxial bending

The calculation produces a column interaction diagram and tabular results for axial load and biaxial bending on a rectangular section. The analysis is in accordance with BS5400-4:1990 as implemented by DOT Standard BD 44/15. The method used is that described in Clause 5.5.3.2 with the stresses in the concrete in compression derived from the stress-strain curve in Figure 1. The axial force is assumed to act at the centroid of the gross concrete section.

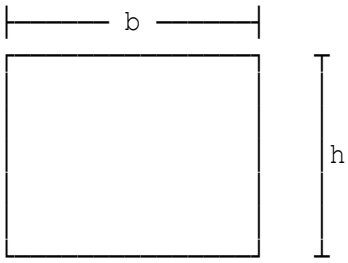

Rectangular column section with biaxial bending.

Breadth of concrete section	b=350 mm
Depth of concrete section	h=450 mm
Char. strength of concrete	fcu=40 N/mm²
Number of layers of reinforcement	n=2
Char. strength of reinforcement	fym=460 N/mm²
Young's modulus for r'ment	Em=200000 N/mm²
Concrete material factor γm	gamc=1.50
Steel material factor γm	gams=1.15
Reinforcement layer 1 :	
Number of bars	nob(1)=7
x co-ordinate	xs(1)=50 mm
y co-ordinate	ys(1)=50 mm
Location of last bar	
x co-ordinate	xf(1)=300 mm
Diameter of bars	dob(1)=16 mm
Reinforcement layer 2 :	
Number of bars	nob(2)=7
x co-ordinate	xs(2)=50 mm
y co-ordinate	ys(2)=400 mm
Location of last bar	
x co-ordinate	xf(2)=300 mm
Diameter of bars	dob(2)=16 mm

```
              Face 1
          ┌──────────────┐A
          │   *          │ Face 2
          │  θ  *                  Angle θ measured from
   X' ..  │.......*......│.. X'    X' - X' axis
          │          *
          │            *
          └──────────────┘

        * * * *  Bending about this axis
```

Depth to Neutral Axis measured from corner A along a line normal to axis of bending.

Angle θ=45°

Faces 1 and 2 under compression from actions of biaxial bending.

Tabular Results

Depth to Neutral Axis (mm)	Moment Capacity (kNm)	Axial Load Capacity (kN)
∞	0	3702
820.24	4.1599	3679.8
791.96	5.7222	3671.2
763.68	7.7621	3659.8
735.39	10.35	3645.3
707.11	13.707	3626.2
678.82	18.067	3601.3
650.54	23.755	3568.8
622.25	31.237	3525.3
593.97	41.066	3467.8
565.69	54.028	3389.7
537.4	70.711	3286.3
509.12	90.371	3157.2
480.83	112.02	3000.6
452.55	134.78	2815.3
424.26	157.5	2596.8
395.98	179.31	2346.6
367.7	199.16	2061.7
339.41	216.3	1744.1
311.13	226.04	1414.8
282.84	228.16	1083.8
254.56	222.63	758.87
226.27	210.53	449.59
197.99	191.03	165.19
180.04	177.48	0

Graphical Results

Axial Load (kN)	Depth to Neutral Axis (mm)
3702	∞
3679.8	820.24
3671.2	791.96
3659.8	763.68
3645.3	735.39
3626.2	707.11
3601.3	678.82
3568.8	650.54
3525.3	622.25
3467.8	593.97
3389.7	565.69
3286.3	537.4
3157.2	509.12
3000.6	480.83
2815.3	452.55
2596.8	424.26
2346.6	395.98
2061.7	367.7
1744.1	339.41
1414.8	311.13
1083.8	282.84
758.87	254.56
449.59	226.27
165.19	197.99
0	180.04

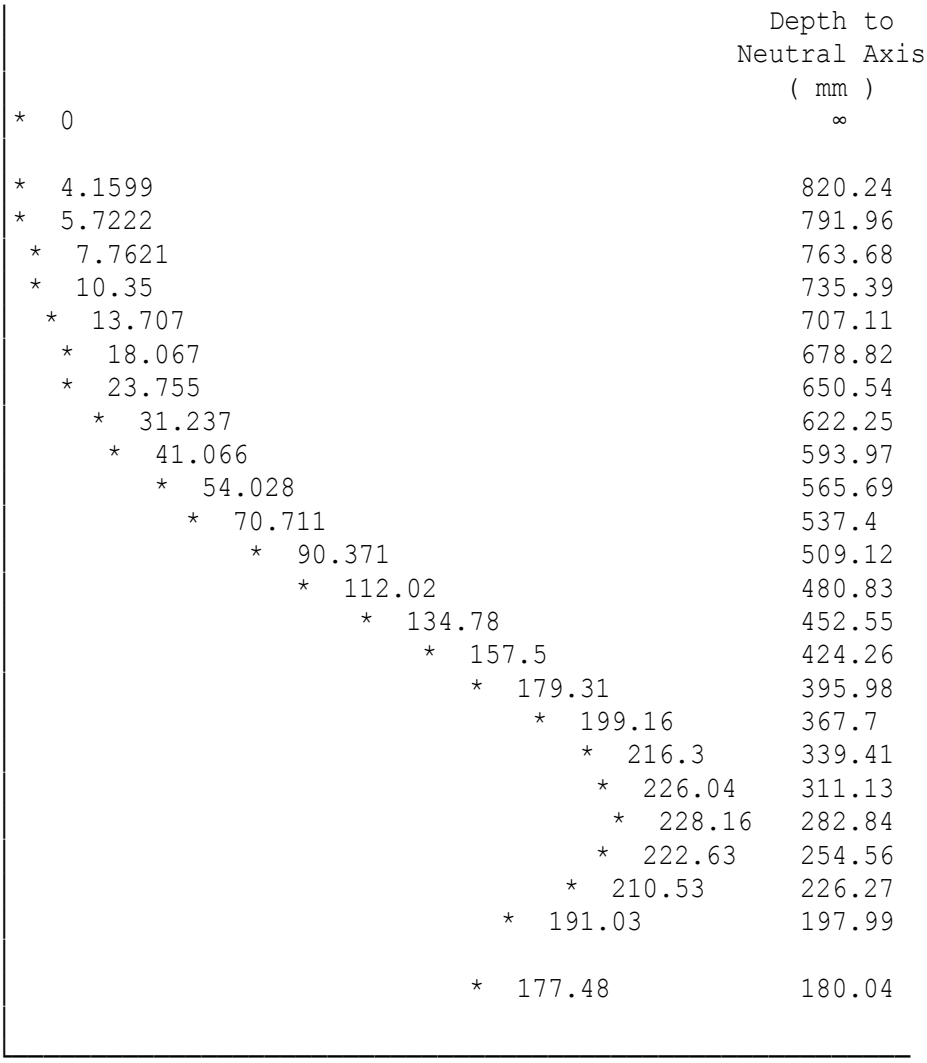

Location: Ex1 - Column A

Rectangular column interaction diagrams for biaxial bending

The calculation produces a column interaction diagram and tabular results for axial load and biaxial bending on a rectangular section. The analysis is in accordance with BS EN 1992-2:2005 and the NA to BS EN 1992-2:2005 and utilises the stresses in the concrete in compression derived from the stress-strain curve in Figure 3.3.

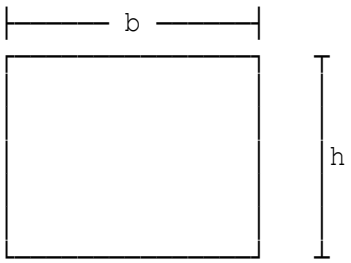

Rectangular column section with biaxial bending.

Breadth of concrete section	b=350 mm
Depth of concrete section	h=450 mm
Number of layers of r'ment	n=2
Char. strength of reinforcement	fyk=500 N/mm²
Young's modulus for r'ment	Em=200000 N/mm²

The calculations utilise the following material factors which are in accordance with BS EN 1992-1-1 (Table 2.1N):

Concrete material factor γc	gamc=1.50
Steel material factor γs	gams=1.15
Reinforcement layer 1 :	
Number of bars	nob(1)=7
x co-ordinate	xs(1)=50 mm
y co-ordinate	ys(1)=50 mm
Location of last bar	
x co-ordinate	xf(1)=300 mm
Diameter of bars	dob(1)=16 mm
Reinforcement layer 2 :	
Number of bars	nob(2)=7
x co-ordinate	xs(2)=50 mm
y co-ordinate	ys(2)=400 mm
Location of last bar	
x co-ordinate	xf(2)=300 mm
Diameter of bars	dob(2)=16 mm

```
              Face 1
          ┌──────────────┐A
          │   *          │ Face 2
          │  θ  *                  Angle θ measured from
   Y' ..  │.......*......│.. Y'    Y' - Y' axis
          │          *   │
          │            * │
          └──────────────┘

        * * * *  Bending about this axis
```

Depth to Neutral Axis measured from corner A along a line normal to axis of bending.

Angle θ=45°

Faces 1 and 2 under compression from actions of biaxial bending.

Tabular Results

Depth to Neutral Axis (mm)	Moment Capacity (kNm)	Axial Load Capacity (kN)
∞	0	3810.3
848.53	5.0579	3783.6
820.24	6.7132	3774.4
791.96	8.7439	3762.8
763.68	11.194	3748.5
735.39	14.207	3730.7
707.11	17.964	3708.2
678.82	22.681	3679.9
650.54	28.732	3643.4
622.25	36.497	3596.5
593.97	46.608	3534.5
565.69	59.76	3453.7
537.4	76.582	3348.2
509.12	96.356	3216.8
480.83	118.03	3056.5
452.55	140.71	2865.5
424.26	163.34	2643.2
395.98	184.88	2387.2
367.7	204.52	2098.8
339.41	221.23	1775.4
311.13	232.53	1433.8
282.84	234.86	1091.9
254.56	230.06	755.91
226.27	218.15	431.88
197.99	199.2	136.61
183.41	188.4	0

Graphical Results

Axial Load (kN)	Depth to Neutral Axis (mm)
3810.3	∞
3783.6	848.53
3774.4	820.24
3762.8	791.96
3748.5	763.68
3730.7	735.39
3708.2	707.11
3679.9	678.82
3643.4	650.54
3596.5	622.25
3534.5	593.97
3453.7	565.69
3348.2	537.4
3216.8	509.12
3056.5	480.83
2865.5	452.55
2643.2	424.26
2387.2	395.98
2098.8	367.7
1775.4	339.41
1433.8	311.13
1091.9	282.84
755.91	254.56
431.88	226.27
136.61	197.99
0	183.41

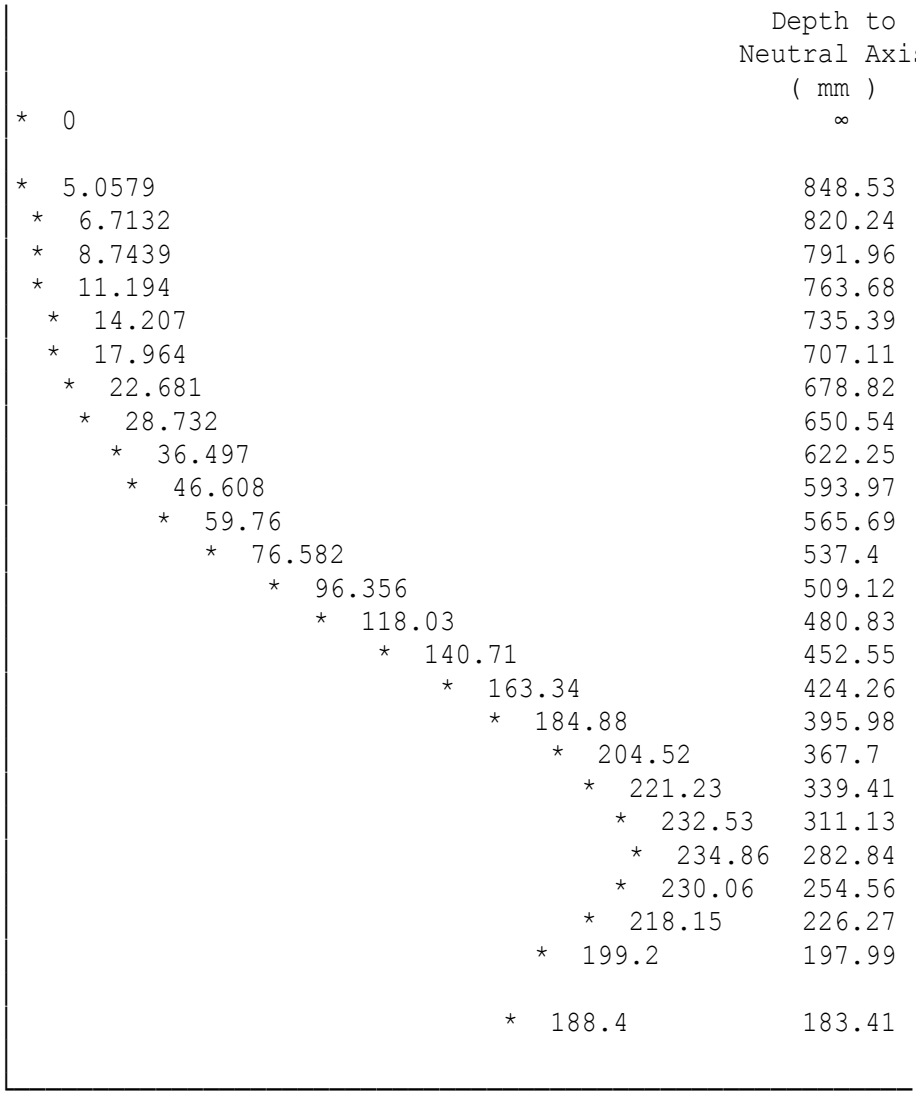

Copyright 1986-2024 Fitzroy Systems Ltd.

Location: Ex1 - Column A

Rectangular column interaction diagrams for biaxial bending

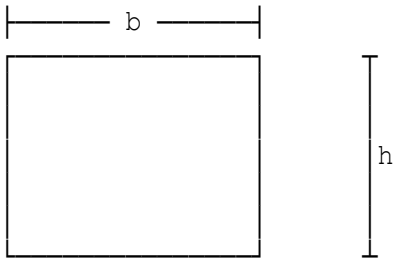

Rectangular column section

Breadth of concrete section b=350 mm
Depth of concrete section h=450 mm

Strength of concrete fcu=40 N/mm²
Number of layers of reinforcement n=2
Strength of reinforcement fym=460 N/mm²
Young's modulus for reinforcement Em=200000 N/mm²
Layer 1 :
Number of bars nob(1)=7
x co-ordinate xs(1)=50 mm
y co-ordinate ys(1)=50 mm
x co-ordinate xf(1)=300 mm
Diameter of bars dob(1)=16 mm
Layer 2 :
Number of bars nob(2)=7
x co-ordinate xs(2)=50 mm
y co-ordinate ys(2)=400 mm
x co-ordinate xf(2)=300 mm
Diameter of bars dob(2)=16 mm
Factor for reinforcement gms=1.15
Factor for concrete gmc=1.5

```
               Face 1
          ┌──────────────┐A
          │   *          │ Face 2    Angle Θ measured from x' - x' axis
          │  Θ  *        │
   x' ..  │.......*......│.. x'
          │         *    │
          │           *  │
          └──────────────┘

        * * * *  Bending about this axis
```

Depth to Neutral Axis measured from corner A along a line normal to axis of bending.

Angle Θ=45°

Faces 1 and 2 under compression from actions of biaxial bending.

Copyright 1986-2024 Fitzroy Systems Ltd.

Tabular Results

Depth to Neutral Axis (mm)	Moment Capacity (kNm)	Axial Load Capacity (KN)
∞	0	3702
820.24	4.1599	3679.8
791.96	5.7222	3671.2
763.68	7.7621	3659.8
735.39	10.35	3645.3
707.11	13.707	3626.2
678.82	18.067	3601.3
650.54	23.755	3568.8
622.25	31.237	3525.3
593.97	41.066	3467.8
565.69	54.028	3389.7
537.4	70.711	3286.3
509.12	90.371	3157.2
480.83	112.02	3000.6
452.55	134.78	2815.3
424.26	157.5	2596.8
395.98	179.31	2346.6
367.7	199.16	2061.7
339.41	216.3	1744.1
311.13	226.04	1414.8
282.84	228.16	1083.8
254.56	222.63	758.87
226.27	210.53	449.59
197.99	191.03	165.19
180.04	177.48	0

Graphical Results

Axial Load (kN)	Depth to Neutral Axis (mm)
3702	∞
3679.8	820.24
3671.2	791.96
3659.8	763.68
3645.3	735.39
3626.2	707.11
3601.3	678.82
3568.8	650.54
3525.3	622.25
3467.8	593.97
3389.7	565.69
3286.3	537.4
3157.2	509.12
3000.6	480.83
2815.3	452.55
2596.8	424.26
2346.6	395.98
2061.7	367.7
1744.1	339.41
1414.8	311.13
1083.8	282.84
758.87	254.56
449.59	226.27
165.19	197.99
0	180.04

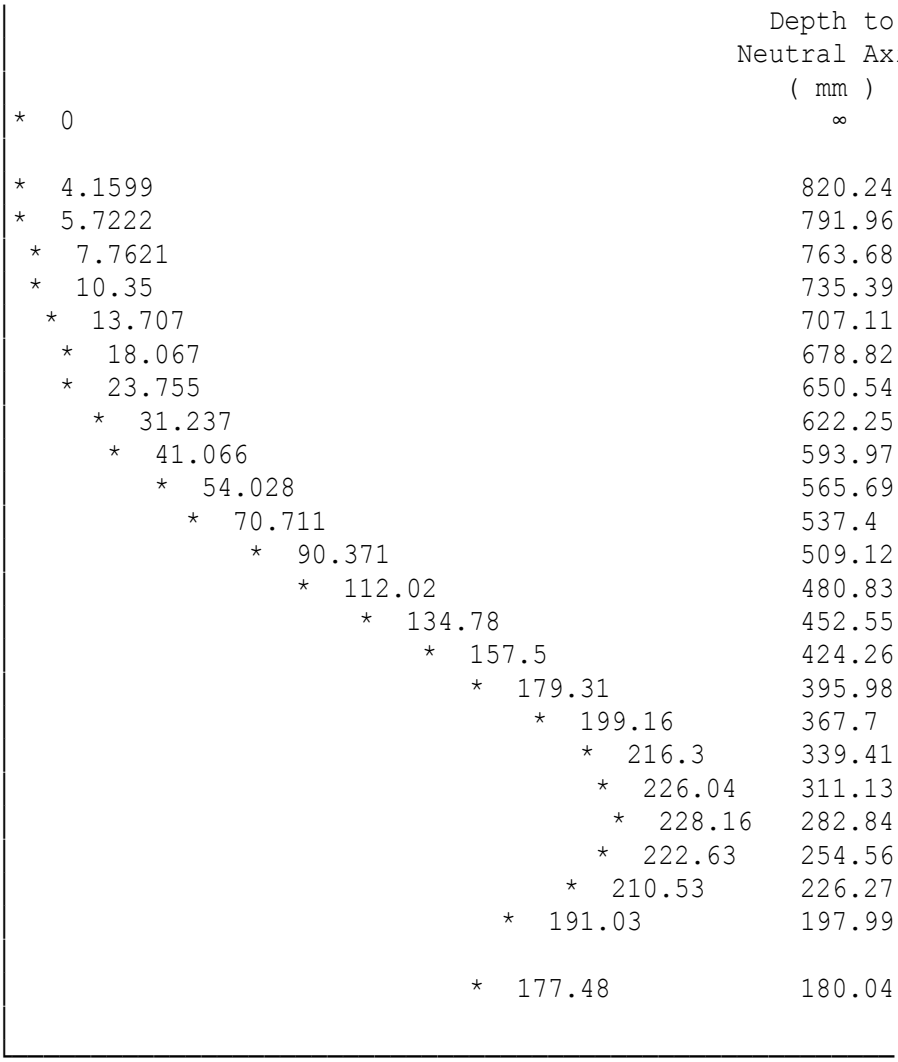

Location: Ex1 - Eight storey concrete building

Brief

The building is assumed to be a concrete framed building. The Eurocode strategies for structural robustness and designing for the avoidance of disproportionate collapse as required by the UK Building Regulations will be considered.
The columns are laid out on a 6.5 m x 7.0 m grid.

Permanent action	Gkr=6 kN/m²
Variable loading	Qkr=3 kN/m²
Permanent action	Gkf=6 kN/m²
Variable loading	Qkf=3 kN/m²

Partial factors

Partial factor for perm.actions	gamG=1.35
Partial factor for vari.actions	gamQ=1.5
Factor Ψ2 for floor variable load	psi2=0.6

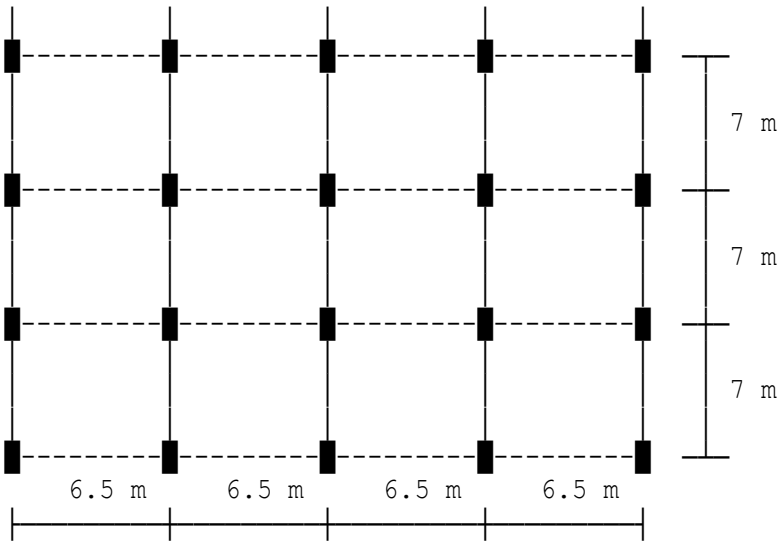

Partial floor plan

Building classification

There are four classes of building presented in the Approved Document A. The building under consideration is classified as Class 2B. Consequences Class 2B assumes medium consequences of failure (i.e. upper risk group). For buildings intended for more than one type of use, the "Consequences Class" should be that relating to the most onerous type.

Number of storeys	ns=8
Floor to ceiling height	ls=3.4 m
3% of column self-weight	csw=3 kN

DESIGN SUMMARY

Building classification 2B	
Floor internal ties:	
Tie resistance in x-direction	**567.84 kN**
Tie resistance in y-direction	**567.84 kN**
Floor perimeter ties:	
Tie resistance in x-direction	**283.92 kN**
Tie resistance in y-direction	**283.92 kN**
Roof internal ties:	
Tie resistance in x-direction	**567.84 kN**
Tie resistance in y-direction	**567.84 kN**
Roof perimeter ties:	
Tie resistance in x-direction	**283.92 kN**
Tie resistance in y-direction	**283.92 kN**
Horizontal ties to columns:	
Edge column tie resistance	**71.796 kN**
Corner column tie resistance	**71.796 kN**
Vertical ties to columns:	
Internal column tensile load	**354.9 kN**
Perimeter column tensile load	**177.45 kN**

In the design of ties, the reinforcement may be assumed to act at its characteristic strength. Rein'ment provided for other purposes may be considered to form part of, or the whole of the ties.

Location: Ex2 - Three storey hotel braced frame construction

Brief

The building is assumed to be a concrete framed building. The Eurocode strategies for structural robustness and designing for the avoidance of disproportionate collapse as required by the UK Building Regulations will be considered.
The columns are laid out on a 7.5 m x 7.5 m grid.

Permanent action	Gkr=4 kN/m²
Variable loading	Qkr=1 kN/m²
Permanent action	Gkf=4 kN/m²
Variable loading	Qkf=3.5 kN/m²

Partial factors

Partial factor for perm.actions	gamG=1.35
Partial factor for vari.actions	gamQ=1.5
Factor Ψ2 for floor variable load	psi2=0.6

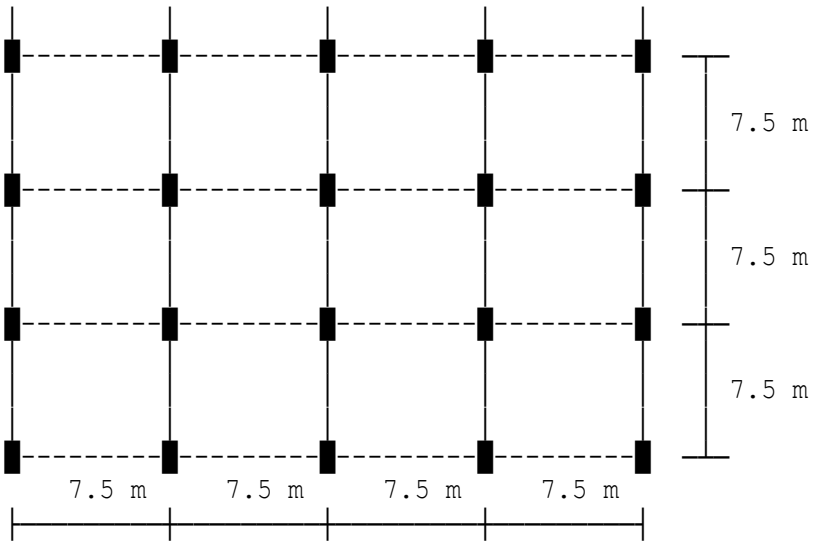

Partial floor plan

Building classification

There are four classes of building presented in the Approved Document A. The building under consideration is classified as Class 2A. Consequences Class 2A assumes medium consequences of failure (i.e. lower risk group). For buildings intended for more than one type of use, the "Consequences Class" should be that relating to the most onerous type.

Number of storeys	ns=3
Floor to ceiling height	ls=3.4 m
3% of column self-weight	csw=3 kN

DESIGN SUMMARY

Building classification 2B

Floor internal ties:

Tie resistance in x-direction	**360 kN**
Tie resistance in y-direction	**360 kN**

Floor perimeter ties:

Tie resistance in x-direction	**180 kN**
Tie resistance in y-direction	**180 kN**

Roof internal ties:

Tie resistance in x-direction	**240 kN**
Tie resistance in y-direction	**240 kN**

Roof perimeter ties:

Tie resistance in x-direction	**120 kN**
Tie resistance in y-direction	**120 kN**

Horizontal ties to columns:

Edge column tie resistance	**43.52 kN**
Corner column tie resistance	**43.52 kN**

In the design of ties, the reinforcement may be assumed to act at its characteristic strength. Rein'ment provided for other purposes may be considered to form part of, or the whole of the ties.

Location: Ex3 - Single storey agricultural portal frame building

Brief

The building is assumed to be a concrete framed building. The Eurocode strategies for structural robustness and designing for the avoidance of disproportionate collapse as required by the UK Building Regulations will be considered.
Single storey portal frame agricultural building 15 m wide, 30 m long and 6 m height to eaves.

Building classification

There are four classes of building presented in the Approved Document A. The building under consideration is classified as Class 1. Consequences Class 1 assumes low consequences of failure. For buildings intended for more than one type of use, the "Consequences Class" should be that relating to the most onerous type.

Additional structural provisions

The minimum level of horizontal tying is 60 kN tension. This needs to be provided to all roof beam-to-column connections. Furthermore all connections between columns and roof rafters should be capable of sustaining a design tensile force of 60 kN.

	Building classification 1
DESIGN SUMMARY	**The minimum level of horizontal tying is 60 kN tension to all roof beam-to-column connections and all column-to-rafter connections.**

Location: Ex4 - Ten storey building (braced frame construction)

Brief

The building is assumed to be a concrete framed building. The Eurocode strategies for structural robustness and designing for the avoidance of disproportionate collapse as required by the UK Building Regulations will be considered.
The columns are laid out on a 6.0 m x 9.0 m grid.

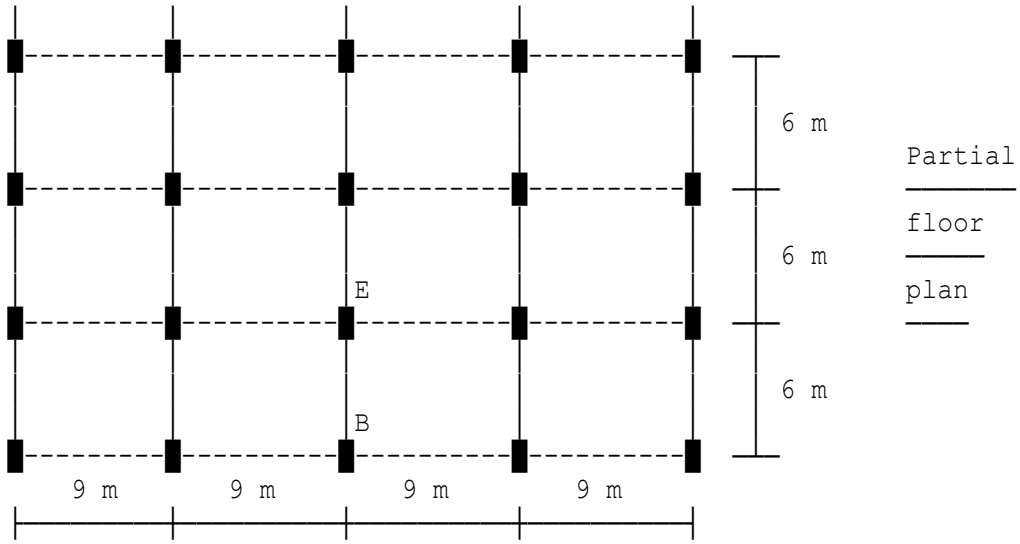

Building classification

There are four classes of building presented in the Approved Document A. The building under consideration is classified as Class 2B. Consequences Class 2B assumes medium consequences of failure (i.e. upper risk group). For buildings intended for more than one type of use, the "Consequences Class" should be that relating to the most onerous type.
Total floor area Afloor=1296 m²

WARNING:
As the area of floor collapse exceeds 15% of the total floor area or 100 m², the 'notional removal method' cannot be used for internal columns in this building.
Please consider using the 'tying method' or 'the key element method' to check for avoidance of disproportionate collapse.
Total floor area Afloor=1296 m²

WARNING:
As the area of floor collapse exceeds 15% of the total floor area or 100 m², the 'notional removal method' cannot be used for internal columns in this building.
Please consider using the 'tying method' or 'the key element method' to check for avoidance of disproportionate collapse.

WARNING:
The 'notional removal method' cannot be used. Consider an alternative design method.

Location: Ex5 - Ten storey building (braced frame construction)

Brief

The building is assumed to be a concrete framed building. The Eurocode strategies for structural robustness and designing for the avoidance of disproportionate collapse as required by the UK Building Regulations will be considered.
The columns are laid out on a 6.0 m x 9.0 m grid

Permanent action	Gkr=3.5 kN/m²
Variable loading	Qkr=1 kN/m²
Permanent action	Gkf=3.5 kN/m²
Variable loading	Qkf=6 kN/m²

Partial factors

Partial factor for perm.actions	gamG=1.35
Partial factor for vari.actions	gamQ=1.5
Factor Ψ1 for floor variable load	psi1=0.5

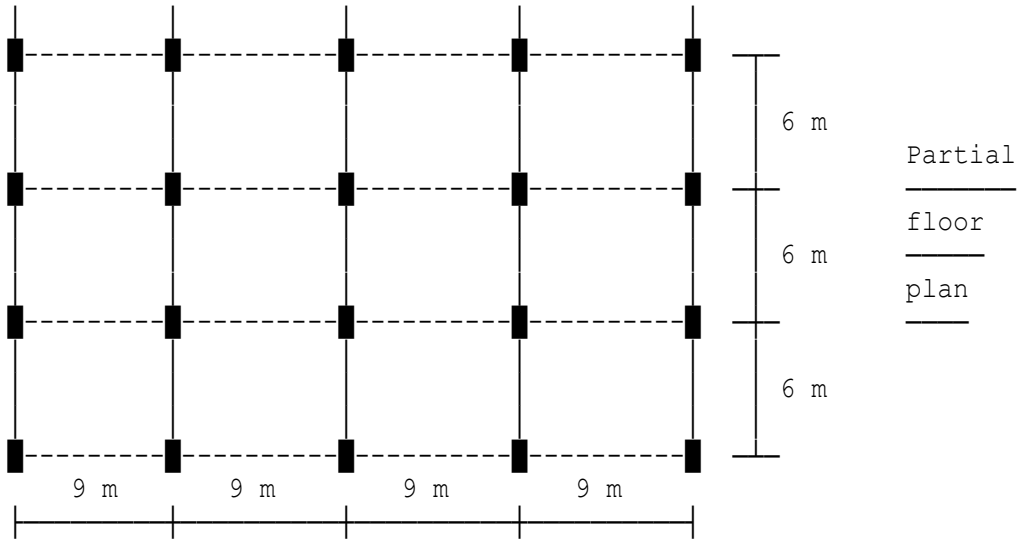

Building classification

There are four classes of building presented in the Approved Document A. The building under consideration is classified as Class 2B. Consequences Class 2B assumes medium consequences of failure (i.e. upper risk group). For buildings intended for more than one type of use, the "Consequences Class" should be that relating to the most onerous type.

Column height	Lc=5 m
Column depth	hc=300 mm
Column width	bc=300 mm

Actions

Maximum blast load:
The length of partition remaining attached to the key element after the blast is (bc+200) mm and this will be considered below.

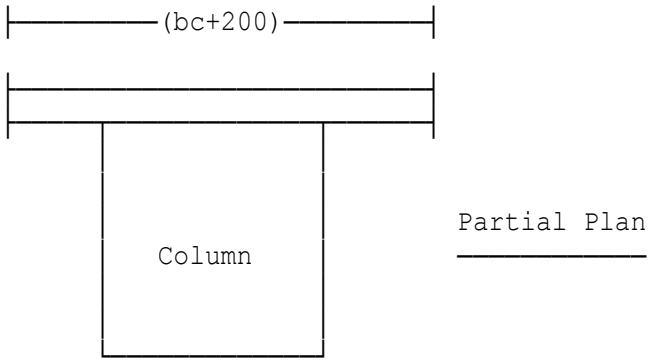

Partitioning resistance to blast	wprb=2 kN/m²
Column spacing	cs=9 m
Column self weight	csw=50 kN
Number of storeys	ns=10

DESIGN SUMMARY

Building classification 2B

Design the key element column to resist the following combined effects:

1. **Design axial force 3398 kN**
   Design major axis moment 56.25 kNm
2. **Design axial force 3398 kN**
   Design minor axis moment 56.25 kNm

Location: Ex6 - Three storey school (transfer beams at 1st floor)

Brief

The building is assumed to be a concrete framed building. The Eurocode strategies for structural robustness and designing for the avoidance of disproportionate collapse as required by the UK Building Regulations will be considered.
The columns are laid out on a 6.0 m x 7.5 m grid. Transfer beams provided at 1st floor level only.

Permanent action	Gkr=3.5 kN/m²
Variable loading	Qkr=1 kN/m²
Permanent action	Gkf=3.5 kN/m²
Variable loading	Qkf=6 kN/m²

Partial factors

Partial factor for perm.actions gamG=1.35
Partial factor for vari.actions gamQ=1.5
Factor Ψ1 for floor variable load psi1=0.7

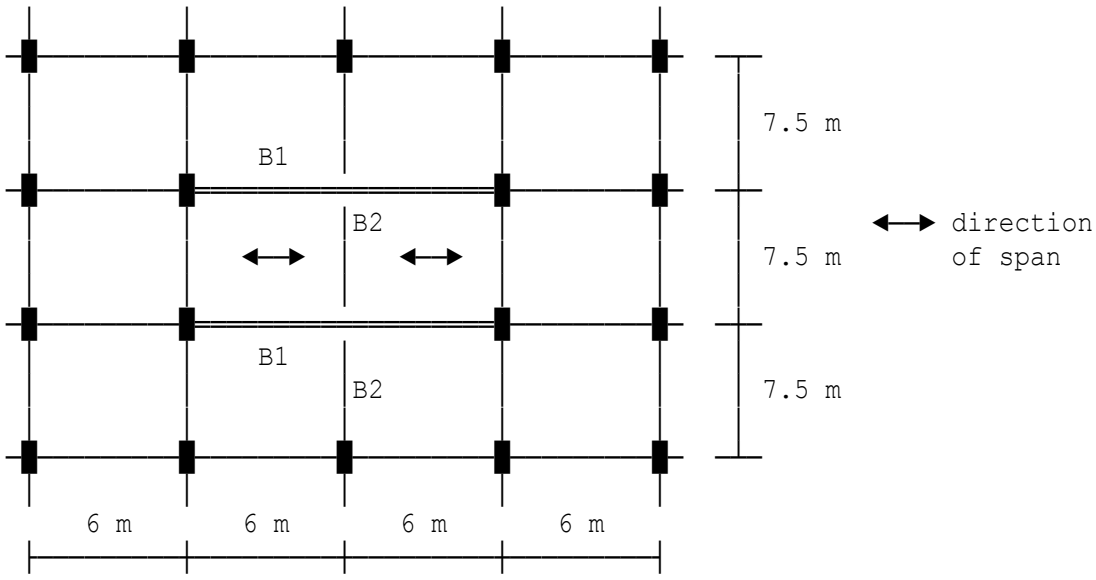

Partial first floor plan
(B1=Transfer Beam)

Building classification

There are four classes of building presented in the Approved Document A. The building under consideration is classified as Class 2B. Consequences Class 2B assumes medium consequences of failure (i.e. upper risk group). For buildings intended for more than one type of use, the "Consequences Class" should be that relating to the most onerous type.

Number of storeys	ns=3
Column self weight	csw=8 kN

DESIGN SUMMARY

Building classification 2B

Horizontal ties: Transfer beams including their connections should be capable of sustaining a design tensile force of 847.36 kN

Vertical ties: The connection between the transfer beam and the base of the column that it supports should be capable of sustaining a design tensile load of 346.5 kN

Location: Ex7 - Three storey school (transfer beams at 1st floor)

Brief

The building is assumed to be a concrete framed building. The Eurocode strategies for structural robustness and designing for the avoidance of disproportionate collapse as required by the UK Building Regulations will be considered.
The columns are laid out on a 6.0 m x 7.5 m grid. Transfer beams provided at 1st floor level only.

Permanent action	Gkr=3.5 kN/m²
Variable loading	Qkr=1 kN/m²
Permanent action	Gkf=3.5 kN/m²
Variable loading	Qkf=6 kN/m²

Partial factors

Partial factor for perm.actions gamG=1.35
Partial factor for vari.actions gamQ=1.5
Factor Ψ1 for floor variable load psi1=0.7

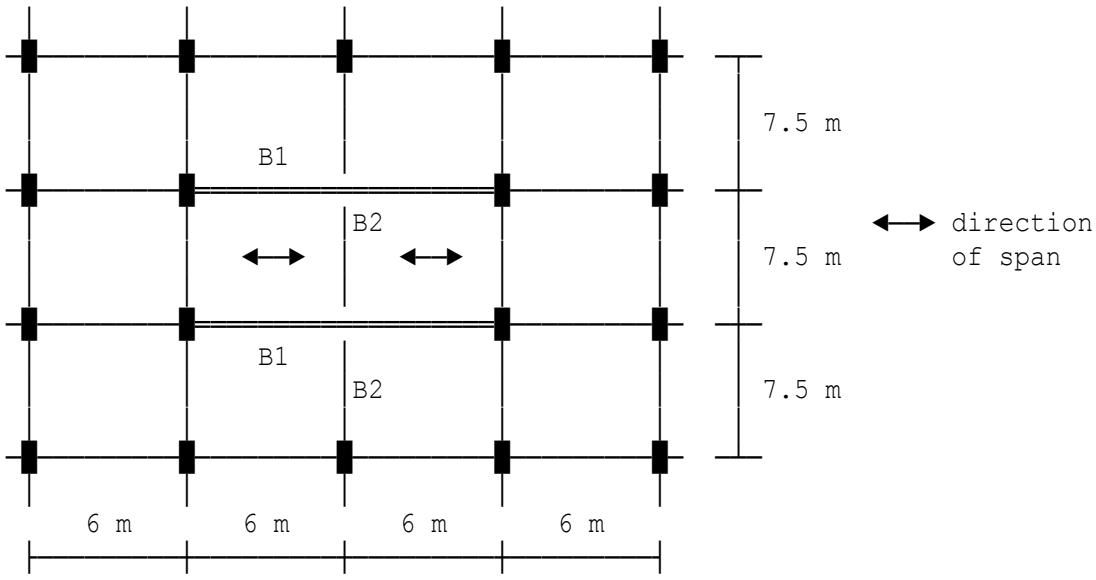

Partial first floor plan
(B1=Transfer Beam)

Building classification

There are four classes of building presented in the Approved Document A. The building under consideration is classified as Class 2B. Consequences Class 2B assumes medium consequences of failure (i.e. upper risk group). For buildings intended for more than one type of use, the "Consequences Class" should be that relating to the most onerous type.

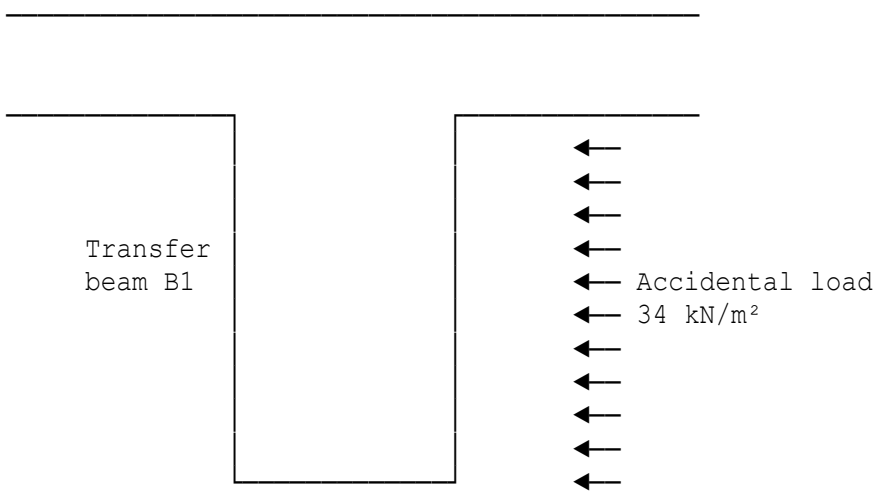

Downwards accidental action

The downwards accidental action on the transfer beam is applied to the top of the slab supported by the transfer beam. Assume the slab will remain attached to the transfer beam for this loading situation.

Number of storeys	ns=3
Column self weight	csw=8 kN
First floor storey height	Hs=4 m

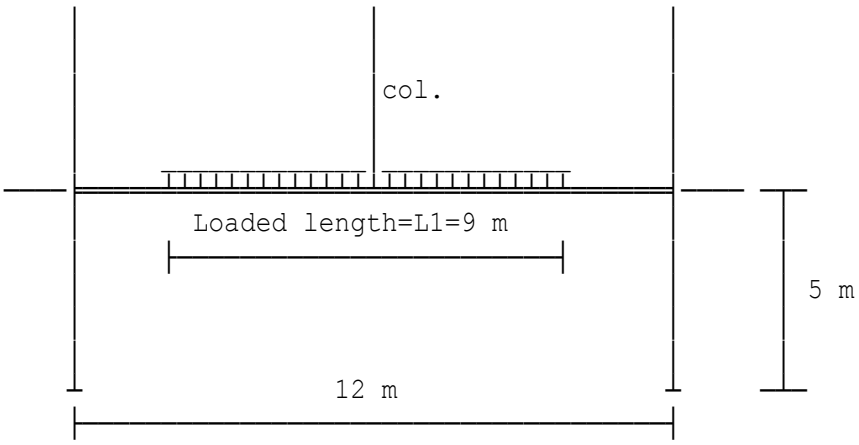

Accidental action applied to transfer beam B1

DESIGN SUMMARY

Building classification 2B
Design the key element transfer beam to resist the loading cases listed below.
Transfer beam assumed to be restrained
Design major axis moment MyEd=6878.6 kNm

Column height	Lc=5 m
Column depth	hc=300 mm
Column width	bc=300 mm

Actions

Maximum blast load:
The length of partition remaining attached to the key element after the blast is (bc+200) mm and this will be considered below.

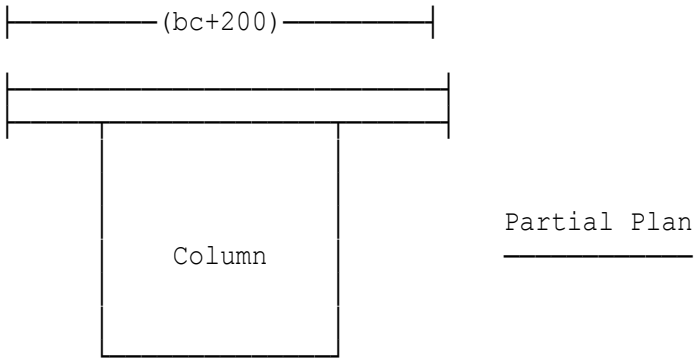

Partitioning resistance to blast	wprb=2 kN/m²
Column spacing	cs=7.5 m
Column self weight	csw=8 kN

DESIGN SUMMARY

Building classification 2B
Design the key element column to resist the following combined effects:

1. **Design axial force 1031.8 kN**
   Design major axis moment 53.125 kNm
2. **Design axial force 1031.8 kN**
   Design minor axis moment 53.125 kNm

Location: Ex8 - Class 3 building

Location: Ex4 - Ten storey building (braced frame construction)

Brief

The building is assumed to be a concrete framed building. The Eurocode strategies for structural robustness and designing for the avoidance of disproportionate collapse as required by the UK Building Regulations will be considered.
The columns are laid out on a 5.0 m x 5.0 m grid.

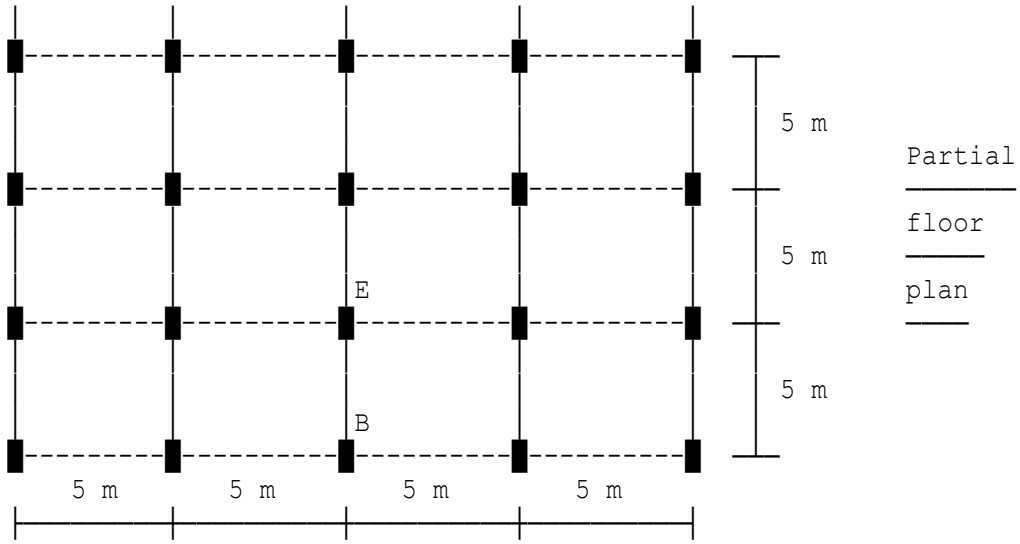

Building classification

There are four classes of building presented in the Approved Document A. The building under consideration is classified as Class 2B. Consequences Class 2B assumes medium consequences of failure (i.e. upper risk group). For buildings intended for more than one type of use, the "Consequences Class" should be that relating to the most onerous type.
Total floor area Afloor=1296 m²
Total floor area Afloor=1296 m²

	Building classification 2B	
	Internal column notional removal:	
DESIGN	**Total area of floor collapse**	**100 m²**
SUMMARY	**Total floor area**	**1296 m²**
	Permitted damaged floor area	**100 m²**
	Edge column notional removal:	
	Total area of floor collapse	**70 m²**
	Total floor area	**1296 m²**
	Perm.local damaged floor area	**100 m²**

Location: Combined compression and bending on substantial section.

Analysis of wall/slab section to requirements of BS8007 and/or BS8110

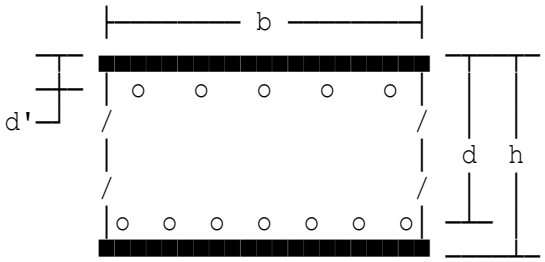

Calculations are undertaken for a section 1 metre in width. Section is assumed to be subjected primarily to bending (i.e. formulae 2 and 3 in Clause B.4 of BS8007 are used to determine stiffening effect of concrete, etc.)

Design to BS8110(1997) with partial safety factor for steel gammaS=1.15

Ultimate moment per metre width	M=950 kNm/m
Service moment per metre width	Mz'=665 kNm/m
Maximum permissible crack width	Cw=0.2 mm
Shear force due to ultimate loads	V=450 kN/m
Ultimate axial load (-ve tension)	Nult'=400 kN/m
Service axial load (-ve tension)	N'=280 kN/m
Characteristic concrete strength	fcu=35 N/mm²
Elastic modulus of concrete	Ec=12000 N/mm²
Characteristic steel strength	fy=500 N/mm²
Overall depth of concrete section	h=1000 mm
Size of tension bars	diat=25 mm
Spacing of tension bars	spac=150 mm
Maximum dia.of coarse aggregate	hagg=20 mm
Size of compression bars	diac=20 mm
Spacing of compression bars	spacc=150 mm
Designated exposure class is XC4	
Specified fixing tolerance	tol=10 mm
Nominal concrete cover	cover=40 mm
Chosen effective depth of section	d=947.5 mm
Chosen depth to compression bars	d'=50 mm
Temp.zone depth for tension steel	trz=250 mm
Temp.zone depth for comp.steel	crz=250 mm
Temp.fall: hydration peak and ambient	T1=20 °C
Seasonal variation in temperature	T2=5 °C
Chosen ratio of fct/fb	fratio=0.67
External restraint factor	R=0.5
Thermal expansion coeff.for concrete	alpha=10E-6
Direct tensile strength	fct=1.6 N/mm²

REINFORCEMENT SUMMARY	**Tension steel:**	**Size**	**25 mm**
		Spacing	**150 mm**
		Area required	**2427.4 mm²/m**
		Area provided	**3272.5 mm²/m**
		Percentages: (pcrit)	**1.309 %**
		provided : (gross)	**0.32725 %**
		Weight provided	**25.689 kg/m²**
	Compression steel:	**Size**	**20 mm**
		Spacing	**150 mm**
		Area required	**0 mm²/m**
		Area provided	**2094.4 mm²/m**
		Percentages: (pcrit)	**0.83776 %**
		provided : (gross)	**0.20944 %**
		Weight provided	**16.441 kg/m²**
	Cover to all steel		**40 mm**
	Total weight of steel		**42.13 kg/m²**

satisfies:

1. **Ultimate limit-state**
2. **Service limit-state cracking in flexure**
3. **Temperature-cracking requirements**

Calculated crack widths	**Flexure:**	**In tension face: between bars**	**0.19345 mm**
	Temperature change:	**In tension face**	**0.079975 mm**
		In compression face	**0.099969 mm**

Location: Combined tension and bending

Analysis of wall/slab section to requirements of BS8007 and/or BS8110

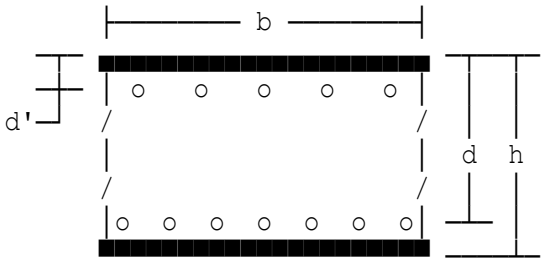

Calculations are undertaken for a section 1 metre in width. Section is assumed to be subjected primarily to bending (i.e. formulae 2 and 3 in Clause B.4 of BS8007 are used to determine stiffening effect of concrete, etc.)

Design to BS8110(1997) with partial safety factor for steel gammaS=1.15

Ultimate moment per metre width	M=950 kNm/m
Service moment per metre width	Mz'=665 kNm/m
Maximum permissible crack width	Cw=0.2 mm
Shear force due to ultimate loads	V=325 kN/m
Ultimate axial load (-ve tension)	Nult'=-1100 kN/m
Service axial load (-ve tension)	N'=-770 kN/m
Characteristic concrete strength	fcu=35 N/mm²
Elastic modulus of concrete	Ec=12000 N/mm²
Characteristic steel strength	fy=500 N/mm²
Overall depth of concrete section	h=1000 mm
Size of tension bars	diat=25 mm
Spacing of tension bars	spac=85 mm
Maximum dia.of coarse aggregate	hagg=20 mm
Size of compression bars	diac=20 mm
Spacing of compression bars	spacc=150 mm
Designated exposure class is XC4	
Specified fixing tolerance	tol=10 mm
Nominal concrete cover	cover=40 mm
Chosen effective depth of section	d=947.5 mm
Chosen depth to compression bars	d'=50 mm
Temp.zone depth for tension steel	trz=250 mm
Temp.zone depth for comp.steel	crz=250 mm
Temp.fall: hydration peak and ambient	T1=20 °C
Seasonal variation in temperature	T2=5 °C
Chosen ratio of fct/fb	fratio=0.67
External restraint factor	R=0.5
Thermal expansion coeff.for concrete	alpha=10E-6
Direct tensile strength	fct=1.6 N/mm²

WARNING:
As the actual shearing stress of 0.34301 N/mm² exceeds the critical value of 0.2574 N/mm², the section is thus inadequate in shear.
Either a higher concrete grade must be employed or a thicker section must be adopted.

Location: Combined tension & bending (as Ex.2 but greater tension).

Analysis of wall/slab section to requirements of BS8007 and/or BS8110

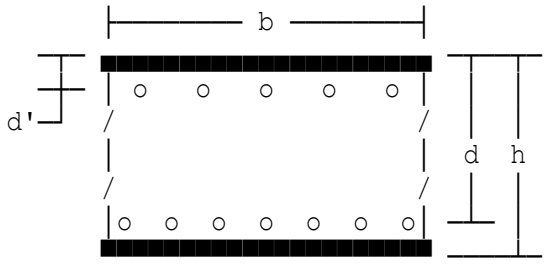

Calculations are undertaken for a section 1 metre in width. Section is assumed to be subjected primarily to bending (i.e. formulae 2 and 3 in Clause B.4 of BS8007 are used to determine stiffening effect of concrete, etc.)

Design to BS8110(1997) with partial safety factor for steel gammaS=1.15

Ultimate moment per metre width	M=950 kNm/m
Service moment per metre width	Mz'=665 kNm/m
Maximum permissible crack width	Cw=0.2 mm
Shear force due to ultimate loads	V=325 kN/m
Ultimate axial load (-ve tension)	Nult'=-1200 kN/m
Service axial load (-ve tension)	N'=-840 kN/m
Characteristic concrete strength	fcu=35 N/mm²
Elastic modulus of concrete	Ec=12000 N/mm²
Characteristic steel strength	fy=500 N/mm²
Overall depth of concrete section	h=1000 mm
Size of tension bars	diat=25 mm
Spacing of tension bars	spac=85 mm
Maximum dia.of coarse aggregate	hagg=20 mm
Size of compression bars	diac=20 mm
Spacing of compression bars	spacc=150 mm
Designated exposure class is XC4	
Specified fixing tolerance	tol=10 mm
Nominal concrete cover	cover=40 mm
Chosen effective depth of section	d=947.5 mm
Chosen depth to compression bars	d'=50 mm
Temp.zone depth for tension steel	trz=250 mm
Temp.zone depth for comp.steel	crz=250 mm
Temp.fall: hydration peak and ambient	T1=20 °C
Seasonal variation in temperature	T2=5 °C
Chosen ratio of fct/fb	fratio=0.67
External restraint factor	R=0.5
Thermal expansion coeff.for concrete	alpha=10E-6
Direct tensile strength	fct=1.6 N/mm²

WARNING:
As the actual shearing stress of 0.34301 N/mm² exceeds the critical value of 0.23688 N/mm², the section is thus inadequate in shear.
Either a higher concrete grade must be employed or a thicker section must be adopted.

Location: Shallow slab. Bending only. Mild steel reinforcement.

Analysis of wall/slab section to requirements of BS8007 and/or BS8110

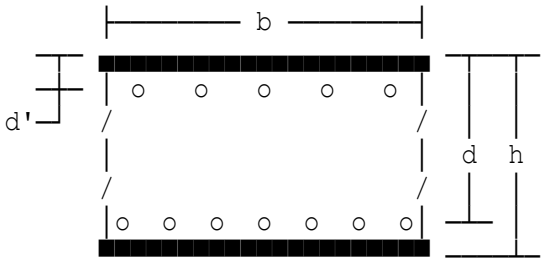

Calculations are undertaken for a section 1 metre in width. Section is assumed to be subjected primarily to bending (i.e. formulae 2 and 3 in Clause B.4 of BS8007 are used to determine stiffening effect of concrete, etc.)

Design to BS8110(1997) with partial safety factor for steel gammaS=1.15

Ultimate moment per metre width	M=30 kNm/m
Service moment per metre width	Mz'=21 kNm/m
Maximum permissible crack width	Cw=0.1 mm
Shear force due to ultimate loads	V=50 kN/m
Ultimate axial load (-ve tension)	Nult'=0 kN/m
Service axial load (-ve tension)	N'=0 kN/m
Characteristic concrete strength	fcu=35 N/mm²
Elastic modulus of concrete	Ec=12000 N/mm²
Characteristic steel strength	fy=250 N/mm²
Overall depth of concrete section	h=200 mm
Size of tension bars	diat=20 mm
Spacing of tension bars	spac=100 mm
Maximum dia.of coarse aggregate	hagg=20 mm
Size of compression bars	diac=12 mm
Spacing of compression bars	spacc=150 mm
Designated exposure class is XC4	
Specified fixing tolerance	tol=10 mm
Nominal concrete cover	cover=40 mm
Chosen effective depth of section	d=150 mm
Chosen depth to compression bars	d'=46 mm
Temp.zone depth for tension steel	trz=100 mm
Temp.zone depth for comp.steel	crz=100 mm
Temp.fall: hydration peak and ambient	T1=20 °C
Seasonal variation in temperature	T2=5 °C
Chosen ratio of fct/fb	fratio=1
External restraint factor	R=0.5
Thermal expansion coeff.for concrete	alpha=10E-6
Direct tensile strength	fct=1.6 N/mm²

REINFORCEMENT SUMMARY	**Tension steel:**	**Size**	**20 mm**
		Spacing	**100 mm**
		Area required	**968.42 mm²/m**
		Area provided	**3141.6 mm²/m**
		Percentages: (pcrit)	**3.1416 %**
		provided : (gross)	**1.5708 %**
		Weight provided	**24.662 kg/m²**
	Compression steel:	**Size**	**12 mm**
		Spacing	**150 mm**
		Area required	**0 mm²/m**
		Area provided	**753.98 mm²/m**
		Percentages: (pcrit)	**0.75398 %**
		provided : (gross)	**0.37699 %**
		Weight provided	**5.9188 kg/m²**
	Cover to all steel		**40 mm**
	Total weight of steel		**30.58 kg/m²**

satisfies:

1. **Ultimate limit-state**
2. **Service limit-state cracking in flexure**
3. **Temperature-cracking requirements**

Calculated crack widths	**Flexure:**	**In tension face: between bars**	**0.042077 mm**
	Temperature change:	**In tension face**	**0.039789 mm**
		In compression face	**0.099472 mm**

Location: Ex1 - Compression & bending on substantial section

Analysis of wall/slab section to EC2 Part 3 and/or EC2 Part 1-1

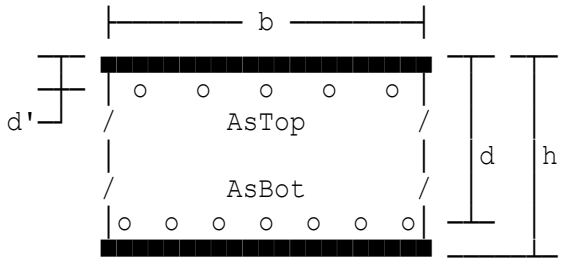

Calculations are undertaken for a section 1.0 m in width.

Section under consideration is assumed to be subjected primarily to bending.

Design partial safety factor	gams=1.15 (reinforcement)
Design BM before redistribution	MEd'=950 kNm/m
Design BM after redistribution	MEd=950 kNm/m
Maximum permissible crack width	wk=0.2 mm
Design shear force	VEd=300 kN/m
Design axial load (-ve tension)	NEd'=400 kN/m
Service axial load (-ve tension)	N'=280 kN/m
Characteristic steel strength	fyk=500 N/mm²
Diameter of tension bars	diat=32 mm
Spacing of tension bars	spac=125 mm
Maximum dia.of coarse aggregate	hagg=20 mm
Diameter of compression bars	diac=25 mm
Spacing of compression bars	spacc=200 mm
Chosen effective depth of section	d=944 mm
Chosen depth to compression bars	d'=52.5 mm
Temp.fall: hydrat.peak & ambient	T1=20 °C
Long-term drop in temperature	T2=5 °C

DESIGN	**Overall depth**	**1000 mm**
SUMMARY	**Effective depth**	**944 mm**
FLEXURE	**Parameter K**	**0.0381**
	Parameter K'	**0.1684**
	Lever arm ratio z/d	**0.95**
	Steel area (tension)	**2436 mm²/m**
	Steel percentage req.	**0.2581 %**
	Minimum area of steel	**1358 mm²/m**
	Maximum area of steel	**40000 mm²/m**
	Distribution steel	**1358 mm²/m**

Shear resistance

Term for shear resistance	vRdc=(rho1*fck)^(1/3)=2.672
Shear resistance	VRdc=CRdc*ks*vRdc*bw*d/1000=442.1 kN
Minimum stress	vmin=0.035*ks^1.5*fck^0.5=0.3268 N/mm²
Minimum shear resistance	VRdm=vmin*bw*d/1000=308.5 kN

SHEAR SUMMARY **Design shear force 300 kN**
Design shear resistance 442.1 kN

NOTE: The axial load has been ignored in the above shear calculation.

Flexural cracking caused by loading

Coefficient (ribbed bars) k1=1.14
Maximum crack spacing (Exp. 7.11) srmax=3.4*c+0.425*k1*k2*diat/ppeff
=304.68 mm
Crack width (Expression 7.8) wk1=srmax*ecr=0.13469 mm
The crack width 0.13469 mm is less than the permissible value of 0.2 mm hence satisfactory.

Shrinkage & thermal cracking caused by edge restraint to movement

For cracking due to restraint to movement the whole section will be considered to be in tension (i.e. the neutral axis depth is -∞).
Coefficient of thermal expansion aTc=10 με/°C
Coefficient k (to CIRIA C660) k=0.65
The full thickness of the section will be used below for evaluating the area of concrete within the tensile zone.
Area of conc.within tensile zone Act=b*h=1E6 mm²
The minimum steel area below is applicable in both directions.
Minimum steel area required Asmin=kc*k*Act*fcteff/fyk=3614 mm²/m
Min steel area required each face Asmin'=1807 mm²/m
The area of tension and compression reinforcement provided exceeds the minimum area required to control thermal and shrinkage cracking. Hence satisfactory.

(A) Tension reinforcement (outside layer):
Shrinkage strain (short-term) ecas=13.6 με
Shrinkage strain (long-term) ecal=45 με
The short-term crack width 0.033135 mm is less than the permissible value of 0.2 mm hence satisfactory.
The long-term crack width 0.069726 mm is less than the permissible value of 0.2 mm hence satisfactory.

(B) Compression reinforcement (outside layer):
Effective concrete area 1 a1c=b*2.5*(c'+diac/2)=131250 mm²
Effective concrete area 2 a2c=b*h/2=500000 mm²
The short-term crack width 0.054861 mm is less than the permissible value of 0.2 mm hence satisfactory.
The long-term crack width 0.11544 mm is less than the permissible value of 0.2 mm hence satisfactory.

	Tension:	Size	32 mm
	steel	Spacing	125 mm
		Area required	2436.4 mm²/m
REINFORCEMENT		Area provided	6434 mm²/m
SUMMARY		Percentage provided	0.6434 %
		Weight provided	50.507 kg/m²
	Compression:	Size	25 mm
	steel	Spacing	200 mm
		Area required	0 mm²/m
		Area provided	2454.4 mm²/m
		Percentage provided	0.24544 %
		Weight provided	19.267 kg/m²
	Distrib.steel:	Area of steel	2010.6 mm²/m
	tension face	Diameter	16 mm
		Spacing	100 mm
	Distrib.steel:	Area of steel	2010.6 mm²/m
	compr.face	Diameter	16 mm
		Spacing	100 mm
	Nominal cover to all tension face steel		40 mm
	Nominal cover to all compr.face steel		40 mm
	Total weight of reinforcement		85.557 kg/m²

satisfies:
1. Ultimate limit-state
2. Service limit-state cracking in flexure
3. Temperature-cracking requirements
4. Fire-resistance requirements

Calculated	Flexure: In tension face: between bars		0.13469 mm
crack widths	Temperature change:	Short-term	0.033135 mm
	(tension face)	Long-term	0.069726 mm
	Temperature change:	Short-term	0.054861 mm
	(compression face)	Long-term	0.11544 mm

Location: Ex2 - Tension and bending

Analysis of wall/slab section to EC2 Part 3 and/or EC2 Part 1-1

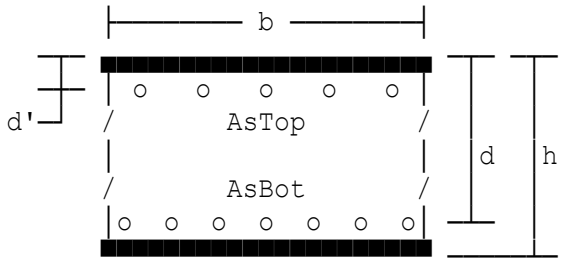

Calculations are undertaken for a section 1.0 m in width.

Section under consideration is assumed to be subjected primarily to bending.

Design partial safety factor	gams=1.15 (reinforcement)
Design BM before redistribution	MEd'=950 kNm/m
Design BM after redistribution	MEd=950 kNm/m
Maximum permissible crack width	wk=0.2 mm
Design shear force	VEd=325 kN/m
Design axial load (-ve tension)	NEd'=-1100 kN/m
Service axial load (-ve tension)	N'=-770 kN/m
Characteristic steel strength	fyk=500 N/mm²
Diameter of tension bars	diat=25 mm
Spacing of tension bars	spac=85 mm
Maximum dia.of coarse aggregate	hagg=20 mm
Diameter of compression bars	diac=20 mm
Spacing of compression bars	spacc=150 mm
Chosen effective depth of section	d=947.5 mm
Chosen depth to compression bars	d'=50 mm
Temp.fall: hydrat.peak & ambient	T1=20 °C
Long-term drop in temperature	T2=5 °C

DESIGN	**Overall depth**	**1000 mm**
SUMMARY	**Effective depth**	**947.5 mm**
FLEXURE	**Parameter K**	**0.0378**
	Parameter K'	**0.1684**
	Lever arm ratio z/d	**0.95**
	Steel area (tension)	**2427 mm²/m**
	Steel percentage req.	**0.2562 %**
	Minimum area of steel	**1363 mm²/m**
	Maximum area of steel	**40000 mm²/m**
	Distribution steel	**1363 mm²/m**

Shear resistance

Term for shear resistance	vRdc=(rho1*fck)^(1/3)=2.575
Shear resistance	VRdc=CRdc*ks*vRdc*bw*d/1000=427.2 kN
Minimum stress	vmin=0.035*ks^1.5*fck^0.5=0.3265 N/mm²
Minimum shear resistance	VRdm=vmin*bw*d/1000=309.4 kN

SHEAR SUMMARY **Design shear force 325 kN**
Design shear resistance 427.2 kN

NOTE: The axial load has been ignored in the above shear calculation.

Flexural cracking caused by loading

Coefficient (ribbed bars) k1=1.14
Maximum crack spacing (Exp. 7.11) srmax=3.4*c+0.425*k1*k2*diat/ppeff
=273.64 mm
Crack width (Expression 7.8) wk1=srmax*ecr=0.13671 mm
The crack width 0.13671 mm is less than the permissible value of 0.2 mm hence satisfactory.

Shrinkage & thermal cracking caused by edge restraint to movement

For cracking due to restraint to movement the whole section will be considered to be in tension (i.e. the neutral axis depth is -∞).
Coefficient of thermal expansion aTc=10 με/°C
Coefficient k (to CIRIA C660) k=0.65
The full thickness of the section will be used below for evaluating the area of concrete within the tensile zone.
Area of conc.within tensile zone Act=b*h=1E6 mm²
The minimum steel area below is applicable in both directions.
Minimum steel area required Asmin=kc*k*Act*fcteff/fyk=3614 mm²/m
Min steel area required each face Asmin'=1807 mm²/m
The area of tension and compression reinforcement provided exceeds the minimum area required to control thermal and shrinkage cracking. Hence satisfactory.

(A) Tension reinforcement (outside layer):
Shrinkage strain (short-term) ecas=13.6 με
Shrinkage strain (long-term) ecal=45 με
The short-term crack width 0.02879 mm is less than the permissible value of 0.2 mm hence satisfactory.
The long-term crack width 0.060582 mm is less than the permissible value of 0.2 mm hence satisfactory.

(B) Compression reinforcement (outside layer):
Effective concrete area 1 a1c=b*2.5*(c'+diac/2)=125000 mm²
Effective concrete area 2 a2c=b*h/2=500000 mm²
The short-term crack width 0.050003 mm is less than the permissible value of 0.2 mm hence satisfactory.
The long-term crack width 0.10522 mm is less than the permissible value of 0.2 mm hence satisfactory.

	Tension:	**Size**	**25 mm**
	steel	**Spacing**	**85 mm**
		Area required	**4957.4 mm²/m**
REINFORCEMENT		**Area provided**	**5775 mm²/m**
SUMMARY		**Percentage provided**	**0.5775 %**
		Weight provided	**45.334 kg/m²**
	Compression:	**Size**	**20 mm**
	steel	**Spacing**	**150 mm**
		Area required	**0 mm²/m**
		Area provided	**2094.4 mm²/m**
		Percentage provided	**0.20944 %**
		Weight provided	**16.441 kg/m²**
	Nominal cover to all tension face steel		**40 mm**
	Nominal cover to all compr.face steel		**40 mm**
	Total weight of reinforcement		**61.775 kg/m²**

satisfies:

1. **Ultimate limit-state**
2. **Service limit-state cracking in flexure**
3. **Temperature-cracking requirements**
4. **Fire-resistance requirements**

Calculated crack widths	**Flexure: In tension face: between bars**		**0.13671 mm**
	Temperature change: (tension face)	**Short-term**	**0.02879 mm**
		Long-term	**0.060582 mm**
	Temperature change: (compression face)	**Short-term**	**0.050003 mm**
		Long-term	**0.10522 mm**

Location: Ex3 - Tension & bending (as Ex.2 but greater tension)

Analysis of wall/slab section to EC2 Part 3 and/or EC2 Part 1-1

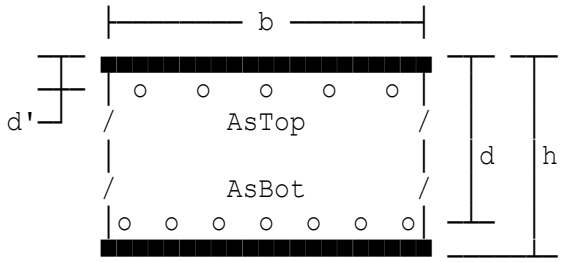

Calculations are undertaken for a section 1.0 m in width.

Section under consideration is assumed to be subjected primarily to bending.

Design partial safety factor	gams=1.15 (reinforcement)
Design BM before redistribution	MEd'=950 kNm/m
Design BM after redistribution	MEd=950 kNm/m
Maximum permissible crack width	wk=0.2 mm
Design shear force	VEd=325 kN/m
Design axial load (-ve tension)	NEd'=-1200 kN/m
Service axial load (-ve tension)	N'=-840 kN/m
Characteristic steel strength	fyk=500 N/mm²
Diameter of tension bars	diat=25 mm
Spacing of tension bars	spac=85 mm
Maximum dia.of coarse aggregate	hagg=20 mm
Diameter of compression bars	diac=20 mm
Spacing of compression bars	spacc=150 mm
Chosen effective depth of section	d=947.5 mm
Chosen depth to compression bars	d'=50 mm
Temp.fall: hydrat.peak & ambient	T1=20 °C
Long-term drop in temperature	T2=5 °C

DESIGN	**Overall depth**	**1000 mm**
SUMMARY	**Effective depth**	**947.5 mm**
FLEXURE	**Parameter K**	**0.0378**
	Parameter K'	**0.1684**
	Lever arm ratio z/d	**0.95**
	Steel area (tension)	**2427 mm²/m**
	Steel percentage req.	**0.2562 %**
	Minimum area of steel	**1363 mm²/m**
	Maximum area of steel	**40000 mm²/m**
	Distribution steel	**1363 mm²/m**

Shear resistance

Term for shear resistance	vRdc=(rho1*fck)^(1/3)=2.575
Shear resistance	VRdc=CRdc*ks*vRdc*bw*d/1000=427.2 kN
Minimum stress	vmin=0.035*ks^1.5*fck^0.5=0.3265 N/mm²
Minimum shear resistance	VRdm=vmin*bw*d/1000=309.4 kN

SHEAR SUMMARY **Design shear force 325 kN**
Design shear resistance 427.2 kN

NOTE: The axial load has been ignored in the above shear calculation.

Flexural cracking caused by loading

Coefficient (ribbed bars) k1=1.14
Maximum crack spacing (Exp. 7.11) srmax=3.4*c+0.425*k1*k2*diat/ppeff
=273.64 mm
Crack width (Expression 7.8) wk1=srmax*ecr=0.13671 mm
The crack width 0.13671 mm is less than the permissible value of 0.2 mm hence satisfactory.

Shrinkage & thermal cracking caused by edge restraint to movement

For cracking due to restraint to movement the whole section will be considered to be in tension (i.e. the neutral axis depth is -∞).
Coefficient of thermal expansion aTc=10 με/°C
Coefficient k (to CIRIA C660) k=0.65
The full thickness of the section will be used below for evaluating the area of concrete within the tensile zone.
Area of conc.within tensile zone Act=b*h=1E6 mm²
The minimum steel area below is applicable in both directions.
Minimum steel area required Asmin=kc*k*Act*fcteff/fyk=3614 mm²/m
Min steel area required each face Asmin'=1807 mm²/m
The area of tension and compression reinforcement provided exceeds the minimum area required to control thermal and shrinkage cracking. Hence satisfactory.

(A) Tension reinforcement (outside layer):
Shrinkage strain (short-term) ecas=13.6 με
Shrinkage strain (long-term) ecal=45 με
The short-term crack width 0.02879 mm is less than the permissible value of 0.2 mm hence satisfactory.
The long-term crack width 0.060582 mm is less than the permissible value of 0.2 mm hence satisfactory.

(B) Compression reinforcement (outside layer):
Effective concrete area 1 a1c=b*2.5*(c'+diac/2)=125000 mm²
Effective concrete area 2 a2c=b*h/2=500000 mm²
The short-term crack width 0.050003 mm is less than the permissible value of 0.2 mm hence satisfactory.
The long-term crack width 0.10522 mm is less than the permissible value of 0.2 mm hence satisfactory.

	Tension:	**Size**	**25 mm**
	steel	**Spacing**	**85 mm**
		Area required	**5187.4 mm²/m**
REINFORCEMENT		**Area provided**	**5775 mm²/m**
SUMMARY		**Percentage provided**	**0.5775 %**
		Weight provided	**45.334 kg/m²**
	Compression:	**Size**	**20 mm**
	steel	**Spacing**	**150 mm**
		Area required	**0 mm²/m**
		Area provided	**2094.4 mm²/m**
		Percentage provided	**0.20944 %**
		Weight provided	**16.441 kg/m²**
	Nominal cover to all tension face steel		**40 mm**
	Nominal cover to all compr.face steel		**40 mm**
	Total weight of reinforcement		**61.775 kg/m²**

satisfies:

1. **Ultimate limit-state**
2. **Service limit-state cracking in flexure**
3. **Temperature-cracking requirements**
4. **Fire-resistance requirements**

Calculated crack widths	**Flexure: In tension face: between bars**		**0.13671 mm**
	Temperature change: (tension face)	**Short-term**	**0.02879 mm**
		Long-term	**0.060582 mm**
	Temperature change: (compression face)	**Short-term**	**0.050003 mm**
		Long-term	**0.10522 mm**

Location: Ex4 - Shallow slab (bending only)

Analysis of wall/slab section to EC2 Part 3 and/or EC2 Part 1-1

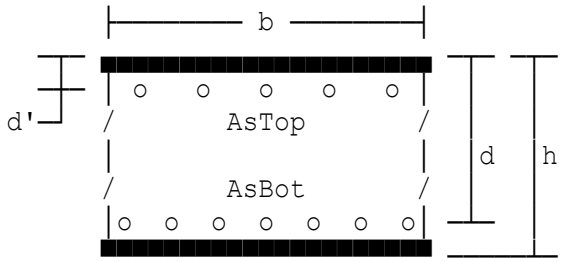

Calculations are undertaken for a section 1.0 m in width.

Section under consideration is assumed to be subjected primarily to bending.

Design partial safety factor	gams=1.15 (reinforcement)
Design BM before redistribution	MEd'=30 kNm/m
Design BM after redistribution	MEd=30 kNm/m
Maximum permissible crack width	wk=0.2 mm
Design shear force	VEd=50 kN/m
Design axial load (-ve tension)	NEd'=0 kN/m
Service axial load (-ve tension)	N'=0 kN/m
Characteristic steel strength	fyk=500 N/mm²
Diameter of tension bars	diat=20 mm
Spacing of tension bars	spac=150 mm
Maximum dia.of coarse aggregate	hagg=20 mm
Diameter of compression bars	diac=12 mm
Spacing of compression bars	spacc=125 mm
Chosen effective depth of section	d=150 mm
Chosen depth to compression bars	d'=46 mm
Temp.fall: hydrat.peak & ambient	T1=20 °C
Long-term drop in temperature	T2=5 °C

DESIGN	**Overall depth**	**200 mm**
SUMMARY	**Effective depth**	**150 mm**
FLEXURE	**Parameter K**	**0.0476**
	Parameter K'	**0.1684**
	Lever arm ratio z/d	**0.95**
	Steel area (tension)	**484.2 mm²/m**
	Steel percentage req.	**0.3228 %**
	Minimum area of steel	**215.8 mm²/m**
	Maximum area of steel	**8000 mm²/m**
	Distribution steel	**215.8 mm²/m**

Shear resistance

Term for shear resistance	vRdc=(rho1*fck)^(1/3)=3.394
Shear resistance	VRdc=CRdc*ks*vRdc*bw*d/1000=122.2 kN
Minimum stress	vmin=0.035*ks^1.5*fck^0.5=0.5238 N/mm²
Minimum shear resistance	VRdm=vmin*bw*d/1000=78.57 kN

SHEAR SUMMARY **Design shear force 50 kN**
Design shear resistance 122.2 kN

Flexural cracking caused by loading

Coefficient (ribbed bars) k1=1.14
Maximum crack spacing (Exp. 7.11) srmax=3.4*c+0.425*k1*k2*diat/ppeff
=251.05 mm
Crack width (Expression 7.8) wk1=srmax*ecr=0.056751 mm
The crack width 0.056751 mm is less than the permissible value of 0.2 mm hence satisfactory.

Shrinkage & thermal cracking caused by edge restraint to movement

For cracking due to restraint to movement the whole section will be considered to be in tension (i.e. the neutral axis depth is -∞).
Coefficient of thermal expansion aTc=10 με/°C
The full thickness of the section will be used below for evaluating the area of concrete within the tensile zone.
Area of conc.within tensile zone Act=b*h=200000 mm²
The minimum steel area below is applicable in both directions.
Minimum steel area required Asmin=kc*k*Act*fcteff/fyk=1112 mm²/m
Min steel area required each face Asmin'=556 mm²/m
The area of tension and compression reinforcement provided exceeds the minimum area required to control thermal and shrinkage cracking. Hence satisfactory.

(A) Tension reinforcement (outside layer):
Shrinkage strain (short-term) ecas=13.6 με
Shrinkage strain (long-term) ecal=45 με
The short-term crack width 0.041906 mm is less than the permissible value of 0.2 mm hence satisfactory.
The long-term crack width 0.09836 mm is less than the permissible value of 0.2 mm hence satisfactory.

(B) Compression reinforcement (outside layer):
Effective concrete area 1 a1c=b*2.5*(c'+diac/2)=115000 mm²
Effective concrete area 2 a2c=b*h/2=100000 mm²
The short-term crack width 0.054501 mm is less than the permissible value of 0.2 mm hence satisfactory.
The long-term crack width 0.12792 mm is less than the permissible value of 0.2 mm hence satisfactory.

	Tension:	**Size**	**20 mm**
	steel	**Spacing**	**150 mm**
		Area required	**484.21 mm²/m**
REINFORCEMENT		**Area provided**	**2094.4 mm²/m**
SUMMARY		**Percentage provided**	**1.0472 %**
		Weight provided	**16.441 kg/m²**
	Compression:	**Size**	**12 mm**
	steel	**Spacing**	**125 mm**
		Area required	**0 mm²/m**
		Area provided	**904.78 mm²/m**
		Percentage provided	**0.45239 %**
		Weight provided	**7.1025 kg/m²**
	Nominal cover to all tension face steel		**40 mm**
	Nominal cover to all compr.face steel		**40 mm**
	Total weight of reinforcement		**23.544 kg/m²**

satisfies:

1. **Ultimate limit-state**
2. **Service limit-state cracking in flexure**
3. **Temperature-cracking requirements**
4. **Fire-resistance requirements**

Calculated crack widths	**Flexure: In tension face: between bars**		**0.056751 mm**
	Temperature change: (tension face)	**Short-term**	**0.041906 mm**
		Long-term	**0.09836 mm**
	Temperature change: (compression face)	**Short-term**	**0.054501 mm**
		Long-term	**0.12792 mm**

Location: Ex5 Edge restraint (TCC Concrete Basements Section 10)

Analysis of wall/slab section to EC2 Part 3 and/or EC2 Part 1-1

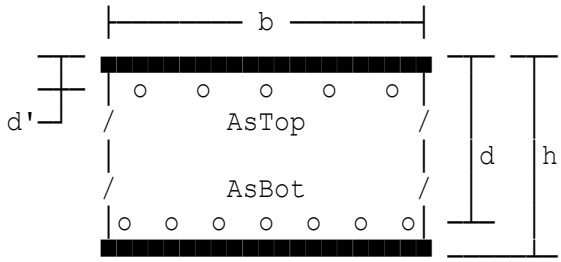

Calculations are undertaken for a section 1.0 m in width.

Section under consideration is assumed to be subjected primarily to bending.

Design partial safety factor	gams=1.15 (reinforcement)
Design BM before redistribution	MEd'=34.1 kNm/m
Design BM after redistribution	MEd=34.1 kNm/m
Maximum permissible crack width	wk=0.2 mm
Design shear force	VEd=82 kN/m
Design axial load (-ve tension)	NEd'=0 kN/m
Service axial load (-ve tension)	N'=0 kN/m
Characteristic steel strength	fyk=500 N/mm²
Diameter of tension bars	diat=16 mm
Spacing of tension bars	spac=125 mm
Maximum dia.of coarse aggregate	hagg=20 mm
Diameter of compression bars	diac=12 mm
Spacing of compression bars	spacc=100 mm
Effective depth of section	d=176 mm
Chosen depth to compression bars	d'=48 mm
Temp.fall: hydrat.peak & ambient	T1=18 °C
Long-term drop in temperature	T2=10 °C

DESIGN	**Overall depth**	**250 mm**
SUMMARY	**Effective depth**	**176 mm**
FLEXURE	**Parameter K**	**0.0367**
	Parameter K'	**0.1684**
	Lever arm ratio z/d	**0.95**
	Steel area (tension)	**469.1 mm²/m**
	Steel percentage req.	**0.2665 %**
	Minimum area of steel	**265.1 mm²/m**
	Maximum area of steel	**10000 mm²/m**
	Distribution steel	**265.1 mm²/m**

Shear resistance

Term for shear resistance	vRdc=(rho1*fck)^(1/3)=3.015
Shear resistance	VRdc=CRdc*ks*vRdc*bw*d/1000=127.4 kN
Minimum stress	vmin=0.035*ks^1.5*fck^0.5=0.5422 N/mm²
Minimum shear resistance	VRdm=vmin*bw*d/1000=95.43 kN

SHEAR SUMMARY **Design shear force 82 kN**
Design shear resistance 127.4 kN

Flexural cracking caused by loading

Coefficient (ribbed bars) k1=0.8
Maximum crack spacing (Exp. 7.11) srmax=3.4*c+0.425*k1*k2*diat/ppeff
=337.34 mm
Crack width (Expression 7.8) wk1=srmax*ecr=0.094186 mm
The crack width 0.094186 mm is less than the permissible value of 0.2 mm hence satisfactory.

Shrinkage & thermal cracking caused by edge restraint to movement

For cracking due to restraint to movement the whole section will be considered to be in tension (i.e. the neutral axis depth is -∞).
Coefficient of thermal expansion aTc=12 με/°C
The full thickness of the section will be used below for evaluating the area of concrete within the tensile zone.
Area of conc.within tensile zone Act=b*h=250000 mm²
The minimum steel area below is applicable in both directions.
Minimum steel area required Asmin=kc*k*Act*fcteff/fyk=1450 mm²/m
Min steel area required each face Asmin'=725 mm²/m
The area of tension and compression reinforcement provided exceeds the minimum area required to control thermal and shrinkage cracking. Hence satisfactory.

(A) Tension face reinforcement:
Shrinkage strain (short-term) ecas=15 με
Shrinkage strain (long-term) ecal=50 με
Creep coefficient K=1
Calculation assumes internal condition (i.e. ambient RH=45%).
Design crack width (long-term) wk2l=srmax*ecrl/10^6=0.19868 mm
The short-term crack width 0.050155 mm is less than the permissible value of 0.2 mm hence satisfactory.
The long-term crack width 0.19868 mm is less than the permissible value of 0.2 mm hence satisfactory.

(B) Compression face reinforcement:
Effective concrete area 1 a1c=b*2.5*(c'+diac/2)=120000 mm²
Effective concrete area 2 a2c=b*h/2=125000 mm²
The short-term crack width 0.044617 mm is less than the permissible value of 0.2 mm hence satisfactory.
The long-term crack width 0.17674 mm is less than the permissible value of 0.2 mm hence satisfactory.

	Tension:	**Size**	**16 mm**
	steel	**Spacing**	**125 mm**
		Area required	**469.08 mm²/m**
REINFORCEMENT		**Area provided**	**1608.5 mm²/m**
SUMMARY		**Percentage provided**	**0.6434 %**
		Weight provided	**12.627 kg/m²**
	Compression:	**Size**	**12 mm**
	steel	**Spacing**	**100 mm**
		Area required	**0 mm²/m**
		Area provided	**1131 mm²/m**
		Percentage provided	**0.45239 %**
		Weight provided	**8.8781 kg/m²**
	Nominal cover to all tension face steel		**50 mm**
	Nominal cover to all compr.face steel		**30 mm**
	Total weight of reinforcement		**21.505 kg/m²**

satisfies:

1. **Ultimate limit-state**
2. **Service limit-state cracking in flexure**
3. **Temperature-cracking requirements**
4. **Fire-resistance requirements**

Calculated crack widths	**Flexure: In tension face: between bars**		**0.094186 mm**
	Temperature change: (tension face)	**Short-term**	**0.050155 mm**
		Long-term	**0.19868 mm**
	Temperature change: (compression face)	**Short-term**	**0.044617 mm**
		Long-term	**0.17674 mm**

Location: Ex6 Slab with end restraint, TCC Concrete Basements Sec.10

Analysis of wall/slab section to EC2 Part 3 and/or EC2 Part 1-1

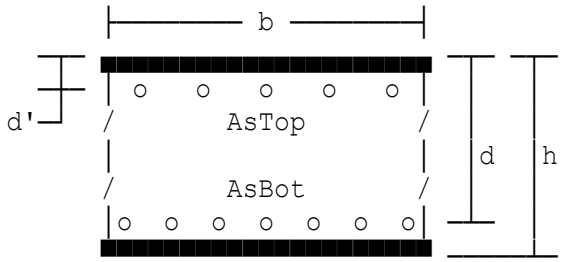

Calculations are undertaken for a section 1.0 m in width.

Section under consideration is assumed to be subjected primarily to bending.

Design partial safety factor	gams=1.15 (reinforcement)
Design BM before redistribution	MEd'=78 kNm/m
Design BM after redistribution	MEd=78 kNm/m
Maximum permissible crack width	wk=0.22 mm
Design shear force	VEd=82 kN/m
Design axial load (-ve tension)	NEd'=0 kN/m
Service axial load (-ve tension)	N'=0 kN/m
Characteristic steel strength	fyk=500 N/mm²
Diameter of tension bars	diat=20 mm
Spacing of tension bars	spac=100 mm
Maximum dia.of coarse aggregate	hagg=20 mm
Diameter of compression bars	diac=20 mm
Spacing of compression bars	spacc=100 mm
Chosen effective depth of section	d=240 mm
Chosen depth to compression bars	d'=40 mm
Temp.fall: hydrat.peak & ambient	T1=18 °C
Long-term drop in temperature	T2=10 °C

DESIGN	**Overall depth**	**300 mm**
SUMMARY	**Effective depth**	**240 mm**
FLEXURE	**Parameter K**	**0.0451**
	Parameter K'	**0.1684**
	Lever arm ratio z/d	**0.95**
	Steel area (tension)	**786.8 mm²/m**
	Steel percentage req.	**0.3279 %**
	Minimum area of steel	**361.5 mm²/m**
	Maximum area of steel	**12000 mm²/m**
	Distribution steel	**361.5 mm²/m**

Shear resistance

Term for shear resistance	vRdc=(rho1*fck)^(1/3)=3.399
Shear resistance	VRdc=CRdc*ks*vRdc*bw*d/1000=187.3 kN
Minimum stress	vmin=0.035*ks^1.5*fck^0.5=0.5072 N/mm²
Minimum shear resistance	VRdm=vmin*bw*d/1000=121.7 kN

SHEAR SUMMARY **Design shear force 82 kN**
Design shear resistance 187.3 kN

Flexural cracking caused by loading

Coefficient (ribbed bars) k1=0.8
Maximum crack spacing (Exp. 7.11) srmax=3.4*c+0.425*k1*k2*diat/ppeff
=249.93 mm
Crack width (Expression 7.8) wk1=srmax*ecr=0.061381 mm
The crack width 0.061381 mm is less than the permissible value of 0.22 mm hence satisfactory.

Shrinkage & thermal cracking caused by end restraint to movement

For cracking due to restraint to movement the whole section will be considered to be in tension (i.e. the neutral axis depth is -∞).
Coefficient of thermal expansion aTc=12 με/°C
The full thickness of the section will be used below for evaluating the area of concrete within the tensile zone.
Area of conc.within tensile zone Act=b*h=300000 mm²
The minimum steel area below is applicable in both directions.
Minimum steel area required Asmin=kc*k*Act*fcteff/fyk=1740 mm²/m
Min steel area required each face Asmin'=870 mm²/m
The area of tension and compression reinforcement provided exceeds the minimum area required to control thermal and shrinkage cracking. Hence satisfactory.

(A) Tension reinforcement (outside layer):
The short-term crack width 0.11512 mm is less than the permissible value of 0.22 mm hence satisfactory.
The long-term crack width 0.19297 mm is less than the permissible value of 0.22 mm hence satisfactory.

(B) Compression reinforcement (outside layer):
Effective concrete area 1 a1c=b*2.5*(c'+diac/2)=100000 mm²
Effective concrete area 2 a2c=b*h/2=150000 mm²
The short-term crack width 0.074108 mm is less than the permissible value of 0.22 mm hence satisfactory.
The long-term crack width 0.12423 mm is less than the permissible value of 0.22 mm hence satisfactory.

	Tension:	**Size**	**20 mm**
	steel	**Spacing**	**100 mm**
		Area required	**786.84 mm²/m**
REINFORCEMENT		**Area provided**	**3141.6 mm²/m**
SUMMARY		**Percentage provided**	**1.0472 %**
		Weight provided	**24.662 kg/m²**
	Compression:	**Size**	**20 mm**
	steel	**Spacing**	**100 mm**
		Area required	**0 mm²/m**
		Area provided	**3141.6 mm²/m**
		Percentage provided	**1.0472 %**
		Weight provided	**24.662 kg/m²**
	Distrib.steel:	**Area of steel**	**3141.6 mm²/m**
	tension face	**Diameter**	**20 mm**
		Spacing	**100 mm**

Distrib.steel:	**Area of steel**	**3141.6 mm²/m**
compr.face	**Diameter**	**20 mm**
	Spacing	**100 mm**
Nominal cover to all tension face steel		**50 mm**
Nominal cover to all compr.face steel		**30 mm**
Total weight of reinforcement		**73.985 kg/m²**

satisfies:

1. **Ultimate limit-state**
2. **Service limit-state cracking in flexure**
3. **Temperature-cracking requirements**
4. **Fire-resistance requirements**

Calculated crack widths	**Flexure: In tension face: between bars**		**0.061381 mm**
	Temperature change: (tension face)	**Short-term**	**0.11512 mm**
		Long-term	**0.19297 mm**
	Temperature change: (compression face)	**Short-term**	**0.074108 mm**
		Long-term	**0.12423 mm**

Location: Ex7 Based on Doug Kay's presentation at IStructE 10.01.12

Analysis of wall/slab section to EC2 Part 3 and/or EC2 Part 1-1

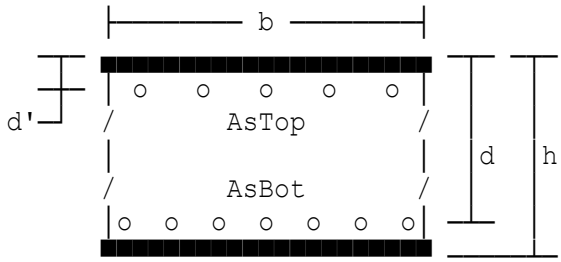

Calculations are undertaken for a section 1.0 m in width.

Section under consideration is assumed to be subjected primarily to bending.

Design partial safety factor	gams=1.15 (reinforcement)
Design BM before redistribution	MEd'=250 kNm/m
Design BM after redistribution	MEd=250 kNm/m
Maximum permissible crack width	wk=0.169 mm
Design shear force	VEd=150 kN/m
Design axial load (-ve tension)	NEd'=0 kN/m
Service axial load (-ve tension)	N'=0 kN/m
Characteristic steel strength	fyk=500 N/mm²
Diameter of tension bars	diat=25 mm
Spacing of tension bars	spac=140 mm
Maximum dia.of coarse aggregate	hagg=20 mm
Diameter of compression bars	diac=25 mm
Spacing of compression bars	spacc=140 mm
Effective depth of section	d=397.5 mm
Chosen depth to compression bars	d'=52.5 mm
Temp.fall: hydrat.peak & ambient	T1=20 °C
Long-term drop in temperature	T2=10 °C

DESIGN	**Overall depth**	**450 mm**
SUMMARY	**Effective depth**	**397.5 mm**
FLEXURE	**Parameter K**	**0.0527**
	Parameter K'	**0.1684**
	Lever arm ratio z/d	**0.95**
	Steel area (tension)	**1523 mm²/m**
	Steel percentage req.	**0.3831 %**
	Minimum area of steel	**598.7 mm²/m**
	Maximum area of steel	**18000 mm²/m**
	Distribution steel	**598.7 mm²/m**

Shear resistance

Term for shear resistance	vRdc=(rho1*fck)^(1/3)=2.98
Shear resistance	VRdc=CRdc*ks*vRdc*bw*d/1000=243 kN
Minimum stress	vmin=0.035*ks^1.5*fck^0.5=0.4284 N/mm²
Minimum shear resistance	VRdm=vmin*bw*d/1000=170.3 kN

SHEAR SUMMARY **Design shear force 150 kN**
Design shear resistance 243 kN

Flexural cracking caused by loading

Coefficient (ribbed bars) k1=0.8
Maximum crack spacing (Exp. 7.11) srmax=3.4*c+0.425*k1*k2*diat/ppeff
=273.19 mm
Crack width (Expression 7.8) wk1=srmax*ecr=0.16391 mm
The crack width 0.16391 mm is less than the permissible value of 0.169 mm hence satisfactory.

Shrinkage & thermal cracking caused by edge restraint to movement

For cracking due to restraint to movement the whole section will be considered to be in tension (i.e. the neutral axis depth is -∞).
Coefficient of thermal expansion aTc=12 με/°C
The full thickness of the section will be used below for evaluating the area of concrete within the tensile zone.
Area of conc.within tensile zone Act=b*h=450000 mm²
The minimum steel area below is applicable in both directions.
Minimum steel area required Asmin=kc*k*Act*fcteff/fyk=2336 mm²/m
Min steel area required each face Asmin'=1168 mm²/m
The area of tension and compression reinforcement provided exceeds the minimum area required to control thermal and shrinkage cracking. Hence satisfactory.

(A) Tension face reinforcement:
Shrinkage strain (short-term) ecas=15 με
Shrinkage strain (long-term) ecal=50 με
Creep coefficient K=1
Calculation assumes internal condition (i.e. ambient RH=45%).
Design crack width (long-term) wk2l=srmax*ecrl/10^6=0.14488 mm
The short-term crack width 0.040649 mm is less than the permissible value of 0.169 mm hence satisfactory.
The long-term crack width 0.14488 mm is less than the permissible value of 0.169 mm hence satisfactory.

(B) Compression face reinforcement:
Effective concrete area 1 a1c=b*2.5*(c'+diac/2)=131250 mm²
Effective concrete area 2 a2c=b*h/2=225000 mm²
The short-term crack width 0.040649 mm is less than the permissible value of 0.169 mm hence satisfactory.
The long-term crack width 0.14488 mm is less than the permissible value of 0.169 mm hence satisfactory.

	Tension:	**Size**	**25 mm**
	steel	**Spacing**	**140 mm**
		Area required	**1522.7 mm²/m**
REINFORCEMENT		**Area provided**	**3506.2 mm²/m**
SUMMARY		**Percentage provided**	**0.77916 %**
		Weight provided	**27.524 kg/m²**
	Compression:	**Size**	**25 mm**
	steel	**Spacing**	**140 mm**
		Area required	**0 mm²/m**
		Area provided	**3506.2 mm²/m**
		Percentage provided	**0.77916 %**
		Weight provided	**27.524 kg/m²**
	Nominal cover to all tension face steel		**40 mm**
	Nominal cover to all compr.face steel		**40 mm**
	Total weight of reinforcement		**55.048 kg/m²**

satisfies:
1. **Ultimate limit-state**
2. **Service limit-state cracking in flexure**
3. **Temperature-cracking requirements**

Calculated crack widths	**Flexure: In tension face: between bars**		**0.16391 mm**
	Temperature change: (tension face)	**Short-term**	**0.040649 mm**
		Long-term	**0.14488 mm**
	Temperature change: (compression face)	**Short-term**	**0.040649 mm**
		Long-term	**0.14488 mm**

Location: Ex8 Crack width=0.3

Analysis of wall/slab section to EC2 Part 3 and/or EC2 Part 1-1

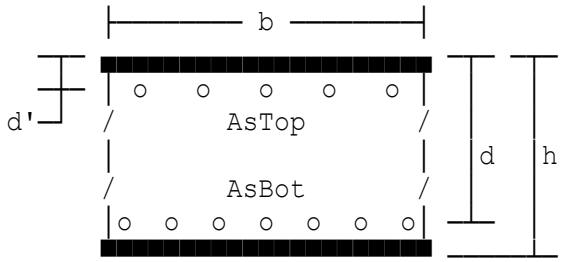

Calculations are undertaken for a section 1.0 m in width.

Section under consideration is assumed to be subjected primarily to bending.

Design partial safety factor	gams=1.15 (reinforcement)
Design BM before redistribution	MEd'=10 kNm/m
Design BM after redistribution	MEd=10 kNm/m
Maximum permissible crack width	wk=0.3 mm
Design shear force	VEd=1 kN/m
Design axial load (-ve tension)	NEd'=0 kN/m
Service axial load (-ve tension)	N'=0 kN/m
Characteristic steel strength	fyk=500 N/mm²
Diameter of tension bars	diat=12 mm
Spacing of tension bars	spac=150 mm
Maximum dia.of coarse aggregate	hagg=20 mm
Diameter of compression bars	diac=12 mm
Spacing of compression bars	spacc=150 mm
Effective depth of section	d=114 mm
Chosen depth to compression bars	d'=61 mm

DESIGN	**Overall depth**	**175 mm**
SUMMARY	**Effective depth**	**114 mm**
FLEXURE	**Parameter K**	**0.024**
	Parameter K'	**0.1684**
	Lever arm ratio z/d	**0.95**
	Steel area (tension)	**212.4 mm²/m**
	Steel percentage req.	**0.1863 %**
	Minimum area of steel	**179.3 mm²/m**
	Maximum area of steel	**7000 mm²/m**
	Distribution steel	**179.3 mm²/m**

Shear resistance

Term for shear resistance	vRdc=(rho1*fck)^(1/3)=2.766
Shear resistance	VRdc=CRdc*ks*vRdc*bw*d/1000=75.68 kN
Minimum stress	vmin=0.035*ks^1.5*fck^0.5=0.56 N/mm²
Minimum shear resistance	VRdm=vmin*bw*d/1000=63.84 kN

SHEAR SUMMARY **Design shear force 1 kN**
Design shear resistance 75.68 kN

Flexural cracking caused by loading

Coefficient (ribbed bars) k1=0.8
Maximum crack spacing (Exp. 7.11) srmax=3.4*c+0.425*k1*k2*diat/ppeff
=319.68 mm
Crack width (Expression 7.8) wk1=srmax*ecr=0.10123 mm
The crack width 0.10123 mm is less than the permissible value of 0.3 mm hence satisfactory.

REINFORCEMENT SUMMARY	**Tension: steel**	**Size**	**12 mm**
		Spacing	**150 mm**
		Area required	**212.37 mm²/m**
		Area provided	**753.98 mm²/m**
		Percentage provided	**0.43085 %**
		Weight provided	**5.9188 kg/m²**
	Compression: steel	**Size**	**12 mm**
		Spacing	**150 mm**
		Area required	**0 mm²/m**
		Area provided	**753.98 mm²/m**
		Percentage provided	**0.43085 %**
		Weight provided	**5.9188 kg/m²**
	Nominal cover to all tension face steel		**45 mm**
	Nominal cover to all compr.face steel		**45 mm**
	Total weight of reinforcement		**11.838 kg/m²**

satisfies:
1. **Ultimate limit-state**
2. **Service limit-state cracking in flexure**

Calculated crack widths **Flexure: In tension face: between bars 0.10123 mm**

Location: Ex1 Combined compression & bending on substantial section

Analysis of rectangular beam section to BS8007 and/or BS8110

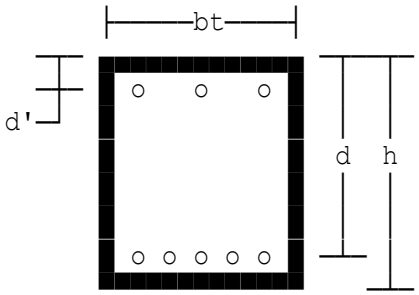

Section is assumed to be subjected primarily to bending (i.e. formulae 2 and 3 in Clause B.4 of BS8007 are used to determine stiffening effect of concrete, etc.)

Design to BS8110(1997) with partial safety factor for steel gammaS=1.15

Ultimate moment	M=980 kNm
Service moment	Mz'=686 kNm
Maximum permissible crack width	Cw=0.2 mm
Shear force due to ultimate loads	V=450 kN
Ultimate axial load (-ve tension)	Nult'=400 kN
Service axial load (-ve tension)	N'=280 kN
Characteristic concrete strength	fcu=35 N/mm²
Elastic modulus of concrete	Ec=12000 N/mm²
Characteristic steel strength	fy=500 N/mm²
Overall depth of concrete section	h=1100 mm
Breadth of concrete section	bt=800 mm
Spacing of bars in sides of beam	spacs=140
Size of tension bars	diat=25 mm
Number of tension bars	ntb=7
Maximum dia.of coarse aggregate	hagg=20 mm
Diameter of shear links	dial=10 mm
Yield strength of links	fyv=250 N/mm²
Number of link legs	nlegs=2
Designated exposure class is XC4	
Specified fixing tolerance	tol=10 mm
Nominal concrete cover	cover=40 mm
Chosen effective depth of section	d=1037.5 mm
Size of compression bars	diac=25 mm
Number of compression bars	ncb=3
Chosen depth to compression bars	d'=62.5 mm
Temp.zone depth for tension steel	trz=250 mm
Temp.zone depth for comp.steel	crz=250 mm
Temp.fall: hydrat.peak & ambient	T1=20 °C
Seasonal variation in temperature	T2=15 °C
Chosen ratio of fct/fb	fratio=0.67
External restraint factor	R=0.5
Thermal expansion coeff.for concrete	alpha=10E-6
Direct tensile strength	fct=1.6 N/mm²
Chosen spacing of links	svinp=100 mm

REINFORCEMENT SUMMARY	**Tension steel:**	**Size**	**25 mm**
		Number	**7**
		Spacing	**112.5 mm**
		Area required	**2286.9 mm²**
		Area provided	**3436.1 mm²**
		Percentages: (pcrit)	**1.7181 %**
		provided : (gross)	**0.39047 %**
		Weight provided	**26.974 kg/m**
	Compression steel:	**Size**	**25 mm**
		Number	**3**
		Spacing	**337.5 mm**
		Area required	**60 mm²**
		Area provided	**1472.6 mm²**
		Percentages: (pcrit)	**0.73631 %**
		provided : (gross)	**0.16734 %**
		Weight provided	**11.56 kg/m**
	In sides of beam	**Size**	**12 mm**
		Number (total)	**10**
		Spacing	**140 mm**
		Weight provided	**8.8781 kg/m**
	Shear links:	**Size**	**10 mm**
		Spacing	**100 mm**
		Number of legs	**2**
		Weight (approx.)	**21.578 kg/m**
	Cover to all steel		**40 mm**
	Total weight of steel (approx.)		**68.989 kg/m**

satisfies:
1. **Ultimate limit-state**
2. **Service limit-state of cracking in flexure**
3. **Temperature-cracking requirements**

Calculated crack widths	**Flexure: In tension face:**	**between bars**	**0.17774 mm**
		at corners	**0.18642 mm**
	Flexure: In side of beam		**0.16251 mm**
	Temperature change:	**In tension face**	**0.085307 mm**
		In compression face	**0.19905 mm**

Location: Ex2 - Combined tension and bending

Analysis of rectangular beam section to BS8007 and/or BS8110

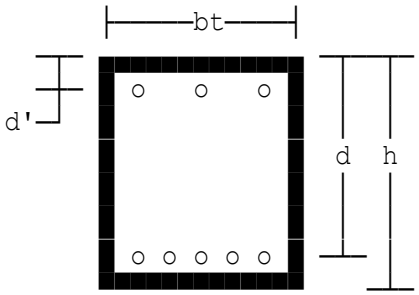

Section is assumed to be subjected primarily to bending (i.e. formulae 2 and 3 in Clause B.4 of BS8007 are used to determine stiffening effect of concrete, etc.)

Design to BS8110(1997) with partial safety factor for steel gammaS=1.15

Ultimate moment	M=1000 kNm
Service moment	Mz'=700 kNm
Maximum permissible crack width	Cw=0.2 mm
Shear force due to ultimate loads	V=800 kN
Ultimate axial load (-ve tension)	Nult'=-600 kN
Service axial load (-ve tension)	N'=-420 kN
Characteristic concrete strength	fcu=40 N/mm²
Elastic modulus of concrete	Ec=12000 N/mm²
Characteristic steel strength	fy=500 N/mm²
Overall depth of concrete section	h=1100 mm
Breadth of concrete section	bt=800 mm
Spacing of bars in sides of beam	spacs=140
Size of tension bars	diat=25 mm
Number of tension bars	ntb=11
Maximum dia.of coarse aggregate	hagg=20 mm
Diameter of shear links	dial=8 mm
Yield strength of links	fyv=500 N/mm²
Number of link legs	nlegs=4
Designated exposure class is XC4	
Specified fixing tolerance	tol=10 mm
Nominal concrete cover	cover=40 mm
Chosen effective depth of section	d=1039.5 mm
Size of compression bars	diac=25 mm
Number of compression bars	ncb=4
Chosen depth to compression bars	d'=60.5 mm
Temp.zone depth for tension steel	trz=250 mm
Temp.zone depth for comp.steel	crz=250 mm
Temp.fall: hydrat.peak & ambient	T1=20 °C
Seasonal variation in temperature	T2=10 °C
Chosen ratio of fct/fb	fratio=0.67
External restraint factor	R=0.5
Thermal expansion coeff.for concrete	alpha=10E-6
Direct tensile strength	fct=1.6 N/mm²
Chosen spacing of links	svinp=160 mm

REINFORCEMENT SUMMARY	**Tension steel:**	**Size**	**25 mm**
		Number	**11**
		Spacing	**67.9 mm**
		Area required	**3709.1 mm²**
		Area provided	**5399.6 mm²**
		Percentages: (pcrit)	**2.6998 %**
		provided : (gross)	**0.61359 %**
		Weight provided	**42.387 kg/m**
	Compression steel:	**Size**	**25 mm**
		Number	**4**
		Spacing	**226.33 mm**
		Area required	**60 mm²**
		Area provided	**1963.5 mm²**
		Percentages: (pcrit)	**0.98175 %**
		provided : (gross)	**0.22312 %**
		Weight provided	**15.413 kg/m**
	In sides of beam	**Size**	**12 mm**
		Number (total)	**10**
		Spacing	**140 mm**
		Weight provided	**8.8781 kg/m**
	Shear links:	**Size**	**8 mm**
		Spacing	**160 mm**
		Number of legs	**4**
		Weight (approx.)	**16.019 kg/m**
	Cover to all steel		**40 mm**
	Total weight of steel (approx.)		**82.698 kg/m**

satisfies:
1. **Ultimate limit-state**
2. **Service limit-state of cracking in flexure**
3. **Temperature-cracking requirements**

Calculated crack widths	**Flexure: In tension face:**	**between bars**	**0.158 mm**
		at corners	**0.19527 mm**
	Flexure: In side of beam		**0.17623 mm**
	Temperature change:	**In tension face**	**0.046531 mm**
		In compression face	**0.12796 mm**

Location: Ex3 - Combined tension and bending

Analysis of rectangular beam section to BS8007 and/or BS8110

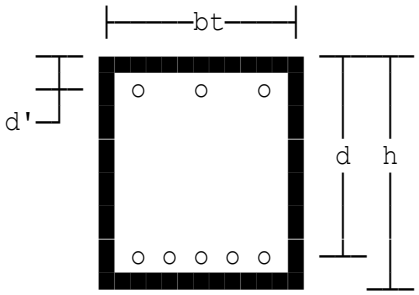

Section is assumed to be subjected primarily to bending (i.e. formulae 2 and 3 in Clause B.4 of BS8007 are used to determine stiffening effect of concrete, etc.)

Design to BS8110(1997) with partial safety factor for steel gammaS=1.15

Ultimate moment	M=1000 kNm
Service moment	Mz'=700 kNm
Maximum permissible crack width	Cw=0.2 mm
Shear force due to ultimate loads	V=800 kN
Ultimate axial load (-ve tension)	Nult'=-600 kN
Service axial load (-ve tension)	N'=-450 kN
Characteristic concrete strength	fcu=40 N/mm²
Elastic modulus of concrete	Ec=12000 N/mm²
Characteristic steel strength	fy=500 N/mm²
Overall depth of concrete section	h=1100 mm
Breadth of concrete section	bt=1000 mm
Spacing of bars in sides of beam	spacs=140
Size of tension bars	diat=25 mm
Number of tension bars	ntb=11
Maximum dia.of coarse aggregate	hagg=20 mm
Diameter of shear links	dial=8 mm
Yield strength of links	fyv=500 N/mm²
Number of link legs	nlegs=4
Designated exposure class is XC4	
Specified fixing tolerance	tol=10 mm
Nominal concrete cover	cover=40 mm
Chosen effective depth of section	d=1039.5 mm
Size of compression bars	diac=25 mm
Number of compression bars	ncb=4
Chosen depth to compression bars	d'=60.5 mm
Temp.zone depth for tension steel	trz=250 mm
Temp.zone depth for comp.steel	crz=250 mm
Temp.fall: hydrat.peak & ambient	T1=20 °C
Seasonal variation in temperature	T2=10 °C
Chosen ratio of fct/fb	fratio=0.67
External restraint factor	R=0.5
Thermal expansion coeff.for concrete	alpha=10E-6
Direct tensile strength	fct=1.6 N/mm²
Chosen spacing of links	svinp=180 mm

REINFORCEMENT SUMMARY	**Tension steel:**	**Size**	**25 mm**
		Number	**11**
		Spacing	**87.9 mm**
		Area required	**3709.1 mm²**
		Area provided	**5399.6 mm²**
		Percentages: (pcrit)	**2.1598 %**
		provided : (gross)	**0.49087 %**
		Weight provided	**42.387 kg/m**
	Compression steel:	**Size**	**25 mm**
		Number	**4**
		Spacing	**293 mm**
		Area required	**75 mm²**
		Area provided	**1963.5 mm²**
		Percentages: (pcrit)	**0.7854 %**
		provided : (gross)	**0.1785 %**
		Weight provided	**15.413 kg/m**
	In sides of beam	**Size**	**12 mm**
		Number (total)	**10**
		Spacing	**140 mm**
		Weight provided	**8.8781 kg/m**
	Shear links:	**Size**	**8 mm**
		Spacing	**180 mm**
		Number of legs	**4**
		Weight (approx.)	**15.554 kg/m**
	Cover to all steel		**40 mm**
	Total weight of steel (approx.)		**82.233 kg/m**

satisfies:
1. **Ultimate limit-state**
2. **Service limit-state of cracking in flexure**
3. **Temperature-cracking requirements**

Calculated crack widths	**Flexure: In tension face:**	**between bars**	**0.15858 mm**
		at corners	**0.18146 mm**
	Flexure: In side of beam		**0.16476 mm**
	Temperature change:	**In tension face**	**0.058164 mm**
		In compression face	**0.15995 mm**

Location: Ex4 - Shallow beam with mild steel (bending only)

Analysis of rectangular beam section to BS8007 and/or BS8110

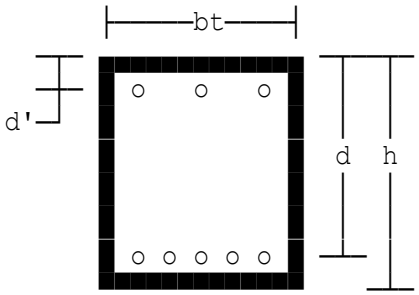

Section is assumed to be subjected primarily to bending (i.e. formulae 2 and 3 in Clause B.4 of BS8007 are used to determine stiffening effect of concrete, etc.)

Design to BS8110(1997) with partial safety factor for steel gammaS=1.15

Ultimate moment	M=45 kNm
Service moment	Mz'=31.5 kNm
Maximum permissible crack width	Cw=0.2 mm
Shear force due to ultimate loads	V=50 kN
Ultimate axial load (-ve tension)	Nult'=0 kN
Service axial load (-ve tension)	N'=0 kN
Characteristic concrete strength	fcu=35 N/mm²
Elastic modulus of concrete	Ec=12000 N/mm²
Characteristic steel strength	fy=250 N/mm²
Overall depth of concrete section	h=250 mm
Breadth of concrete section	bt=300 mm
Size of tension bars	diat=25 mm
Number of tension bars	ntb=3
Maximum dia.of coarse aggregate	hagg=20 mm
Diameter of shear links	dial=8 mm
Yield strength of links	fyv=250 N/mm²
Number of link legs	nlegs=2
Designated exposure class is XC4	
Specified fixing tolerance	tol=10 mm
Nominal concrete cover	cover=40 mm
Chosen effective depth of section	d=189.5 mm
Size of compression bars	diac=20 mm
Number of compression bars	ncb=2
Chosen depth to compression bars	d'=58 mm
Temp.zone depth for tension steel	trz=125 mm
Temp.zone depth for comp.steel	crz=125 mm
Temp.fall: hydrat.peak & ambient	T1=20 °C
Seasonal variation in temperature	T2=5 °C
Chosen ratio of fct/fb	fratio=1
External restraint factor	R=0.5
Thermal expansion coeff.for concrete	alpha=10E-6
Direct tensile strength	fct=1.6 N/mm²
Chosen spacing of links	svinp=180 mm

REINFORCEMENT SUMMARY	**Tension steel:**	**Size**	**25 mm**
		Number	**3**
		Spacing	**89.5 mm**
		Area required	**1296.4 mm²**
		Area provided	**1472.6 mm²**
		Percentages: (pcrit)	**3.927 %**
		provided : (gross)	**1.9635 %**
		Weight provided	**11.56 kg/m**
	Compression steel:	**Size**	**20 mm**
		Number	**2**
		Spacing	**184 mm**
		Area required	**240 mm²**
		Area provided	**628.32 mm²**
		Percentages: (pcrit)	**1.6755 %**
		provided : (gross)	**0.83776 %**
		Weight provided	**4.9323 kg/m**
	Shear links:	**Size**	**8 mm**
		Spacing	**180 mm**
		Number of legs	**2**
		Weight (approx.)	**1.7448 kg/m**
	Cover to all steel		**40 mm**
	Total weight of steel (approx.)		**18.237 kg/m**

satisfies:
1. **Ultimate limit-state**
2. **Service limit-state of cracking in flexure**
3. **Temperature-cracking requirements**

Calculated crack widths	**Flexure: In tension face:**	**between bars**	**0.17814 mm**
		at corners	**0.18556 mm**
	Flexure: In side of beam		**0.11014 mm**
	Temperature change:	**In tension face**	**0.039789 mm**
		In compression face	**0.074604 mm**

Location: Ex1 Combined compression & bending on substantial section

Analysis of rectangular beam section to EC2 Part 3 and/or Part 1-1

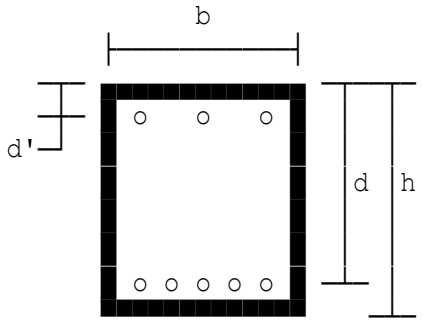

Section under consideration is assumed to be subjected primarily to bending.

b = breadth of section
d = effective depth to tension reinforcement
d'= depth to compression reinforcement

Design partial safety factor	gams=1.15 (reinforcement)
Design BM before redistribution	MEd'=980 kNm
Design BM after redistribution	MEd=980 kNm
Service moment (quasi-permanent)	My'=686 kNm
Maximum permissible crack width	wk=0.2 mm
Shear force due to ultimate loads	VEd=450 kN
Ultimate axial load (-ve tension)	NEd'=400 kN
Service axial load (-ve tension)	N'=280 kN
Characteristic steel strength	fyk=500 N/mm²
Overall depth of concrete section	h=1100 mm
Breadth of concrete section	b=800 mm
Spacing of bars to sides of beam	spacs=140 mm
Diameter of tension bars	diat=25 mm
Number of tension bars	ntb=9
Maximum dia.of coarse aggregate	hagg=20 mm
Diameter of shear links	dial=10 mm
Characteristic strength of links	fyv=500 N/mm²
Chosen effective depth of section	d=1037.5 mm
Diameter of compression bars	diac=25 mm
Number of compression bars	ncb=4
Chosen depth to compression bars	d'=62.5 mm
Temp.fall: Hydrat.peak & ambient	T1=20 °C
Seasonal variation in temperature	T2=15 °C
Design shear stress	vEd=VEd*10^3/(0.9*bw*d)=0.6024 N/mm²
Concrete strut capacity	vRdm=0.124*fck*(1-fck/250)=3.083 N/mm²
Angle of inclination of strut	theta'=22°
Number of shear legs	nsl=4
Chosen spacing	s=300 mm

SHEAR SUMMARY

Design shear force	**450 kN**
Design shear stress	**0.6024 N/mm²**
Concrete strut capacity	**3.083 N/mm²**
Area/spacing ratio	**0.6773**
Diameter of links	**10 mm**
Area of links	**314 mm²**
Maximum spacing	**463 mm**
Actual spacing	**300 mm**

Shrinkage & thermal cracking caused by edge restrained to movement

For cracking due to restraint to movement the whole section will be considered to be in tension (i.e. the neutral axis depth is -∞).
Coefficient of thermal expansion aTc=12 με/°C
The area of tension and compression reinforcement provided exceeds the minimum area required to control thermal and shrinkage cracking. Hence satisfactory.

(A) Tension reinforcement:
Shrinkage strain (short-term) ecas=13.6 με
Shrinkage strain (long-term) ecal=45 με
The short-term crack width 0.0187 mm is less than the permissible value of 0.2 mm hence satisfactory.
The long-term crack width 0.0854 mm is less than the permissible value of 0.2 mm hence satisfactory.

(B) Compression reinforcement:
The short-term crack width 0.0324 mm is less than the permissible value of 0.2 mm hence satisfactory.
The long-term crack width 0.1479 mm is less than the permissible value of 0.2 mm hence satisfactory.

REINFORCEMENT SUMMARY	**Tension steel:**	**Diameter**	**25 mm**
		Number	**9**
		Spacing	**84.38 mm**
		Area required	**2287 mm²**
		Area provided	**4418 mm²**
		Percentages provided	**0.502 %**
		Weight provided	**34.68 kg/m**
	Compression steel:	**Diameter**	**25 mm**
		Number	**4**
		Spacing	**225 mm**
		Area required	**0 mm²**
		Area provided	**1963 mm²**
		Percentages provided	**0.2231 %**
		Weight provided	**15.41 kg/m**
	Beam side faces:	**Diameter**	**12 mm**
		Number (total)	**10**
		Spacing	**140 mm**
		Weight provided	**8.878 kg/m**

Shear links:	**Diameter**	**10 mm**
	Spacing	**300 mm**
	Number of legs	**4**
	Weight (approx.)	**13.36 kg/m**
Cover to all steel		**40 mm**
Total weight of steel (approx.)		**72.33 kg/m**

satisfies:
1. **Ultimate limit-state**
2. **Service limit-state of cracking in flexure**
3. **Temperature-cracking requirements**
4. **Fire-resistance requirements**

Calculated crack widths	**Flexure: In tension face: between bars**		**0.1792 mm**
	Temperature change: (tension face)	**Short-term**	**0.0187 mm**
		Long-term	**0.0854 mm**
	Temperature change: (compr.face)	**Short-term**	**0.0324 mm**
		Long-term	**0.1479 mm**

Location: Ex2 Combined tension and bending

Analysis of rectangular beam section to EC2 Part 3 and/or Part 1-1

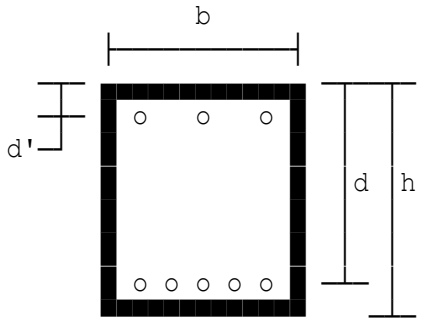

Section under consideration is assumed to be subjected primarily to bending.

b = breadth of section
d = effective depth to tension reinforcement
d'= depth to compression reinforcement

Design partial safety factor	gams=1.15 (reinforcement)
Design BM before redistribution	MEd'=1000 kNm
Design BM after redistribution	MEd=1000 kNm
Service moment (quasi-permanent)	My'=700 kNm
Maximum permissible crack width	wk=0.2 mm
Shear force due to ultimate loads	VEd=800 kN
Ultimate axial load (-ve tension)	NEd'=-600 kN
Service axial load (-ve tension)	N'=-420 kN
Characteristic steel strength	fyk=500 N/mm²
Overall depth of concrete section	h=1100 mm
Breadth of concrete section	b=800 mm
Spacing of bars to sides of beam	spacs=140 mm
Diameter of tension bars	diat=25 mm
Number of tension bars	ntb=10
Maximum dia.of coarse aggregate	hagg=20 mm
Diameter of shear links	dial=8 mm
Characteristic strength of links	fyv=500 N/mm²
Chosen effective depth of section	d=1039.5 mm
Diameter of compression bars	diac=25 mm
Number of compression bars	ncb=4
Chosen depth to compression bars	d'=60.5 mm
Temp.fall: Hydrat.peak & ambient	T1=20 °C
Seasonal variation in temperature	T2=10 °C
Design shear stress	vEd=VEd*10^3/(0.9*bw*d)=1.069 N/mm²
Concrete strut capacity	vRdm=0.124*fck*(1-fck/250)=3.274 N/mm²
Angle of inclination of strut	theta'=22°
Number of shear legs	nsl=4
Chosen spacing	s=250 mm

SHEAR SUMMARY

Design shear force	**800 kN**
Design shear stress	**1.069 N/mm²**
Concrete strut capacity	**3.274 N/mm²**
Area/spacing ratio	**0.7867**
Diameter of links	**8 mm**
Area of links	**201 mm²**
Maximum spacing	**255 mm**
Actual spacing	**250 mm**

Shrinkage & thermal cracking caused by edge restrained to movement

For cracking due to restraint to movement the whole section will be considered to be in tension (i.e. the neutral axis depth is -∞).
Coefficient of thermal expansion aTc=12 με/°C
The area of tension and compression reinforcement provided exceeds the minimum area required to control thermal and shrinkage cracking. Hence satisfactory.

(A) Tension reinforcement:
Shrinkage strain (short-term) ecas=15 με
Shrinkage strain (long-term) ecal=50 με
The short-term crack width 0.0167 mm is less than the permissible value of 0.2 mm hence satisfactory.
The long-term crack width 0.0469 mm is less than the permissible value of 0.2 mm hence satisfactory.

(B) Compression reinforcement:
The short-term crack width 0.0308 mm is less than the permissible value of 0.2 mm hence satisfactory.
The long-term crack width 0.0864 mm is less than the permissible value of 0.2 mm hence satisfactory.

WARNING:
Spacing of bars is too great to satisfy service limit-state conditions.

Location: Ex3 Combined tension & bending, as Ex2 but greater tension

Analysis of rectangular beam section to EC2 Part 3 and/or Part 1-1

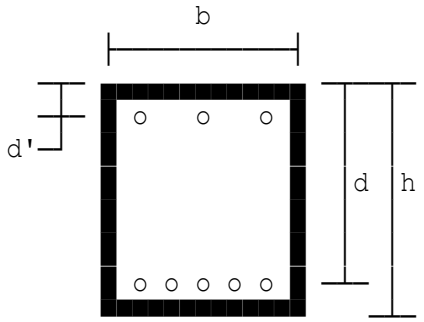

Section under consideration is assumed to be subjected primarily to bending.

b = breadth of section
d = effective depth to tension reinforcement
d'= depth to compression reinforcement

Design partial safety factor	gams=1.15 (reinforcement)
Design BM before redistribution	MEd'=1000 kNm
Design BM after redistribution	MEd=1000 kNm
Service moment (quasi-permanent)	My'=700 kNm
Maximum permissible crack width	wk=0.2 mm
Shear force due to ultimate loads	VEd=800 kN
Ultimate axial load (-ve tension)	NEd'=-1100 kN
Service axial load (-ve tension)	N'=-770 kN
Characteristic steel strength	fyk=500 N/mm²
Overall depth of concrete section	h=1100 mm
Breadth of concrete section	b=800 mm
Spacing of bars to sides of beam	spacs=140 mm
Diameter of tension bars	diat=25 mm
Number of tension bars	ntb=10
Maximum dia.of coarse aggregate	hagg=20 mm
Diameter of shear links	dial=8 mm
Characteristic strength of links	fyv=500 N/mm²
Chosen effective depth of section	d=1039.5 mm
Diameter of compression bars	diac=25 mm
Number of compression bars	ncb=4
Chosen depth to compression bars	d'=60.5 mm
Temp.fall: Hydrat.peak & ambient	T1=20 °C
Seasonal variation in temperature	T2=10 °C
Design shear stress	vEd=VEd*10^3/(0.9*bw*d)=1.069 N/mm²
Concrete strut capacity	vRdm=0.124*fck*(1-fck/250)=3.274 N/mm²
Angle of inclination of strut	theta'=22°
Number of shear legs	nsl=4
Chosen spacing	s=250 mm

SHEAR SUMMARY

Design shear force	**800 kN**
Design shear stress	**1.069 N/mm²**
Concrete strut capacity	**3.274 N/mm²**
Area/spacing ratio	**0.7867**
Diameter of links	**8 mm**
Area of links	**201 mm²**
Maximum spacing	**255 mm**
Actual spacing	**250 mm**

Shrinkage & thermal cracking caused by edge restrained to movement

For cracking due to restraint to movement the whole section will be considered to be in tension (i.e. the neutral axis depth is -∞).
Coefficient of thermal expansion aTc=12 με/°C
The area of tension and compression reinforcement provided exceeds the minimum area required to control thermal and shrinkage cracking. Hence satisfactory.

(A) Tension reinforcement:
Shrinkage strain (short-term) ecas=15 με
Shrinkage strain (long-term) ecal=50 με
The short-term crack width 0.0167 mm is less than the permissible value of 0.2 mm hence satisfactory.
The long-term crack width 0.0469 mm is less than the permissible value of 0.2 mm hence satisfactory.

(B) Compression reinforcement:
The short-term crack width 0.0308 mm is less than the permissible value of 0.2 mm hence satisfactory.
The long-term crack width 0.0864 mm is less than the permissible value of 0.2 mm hence satisfactory.

WARNING:
Spacing of bars is too great to satisfy service limit-state conditions.

Location: Ex4 Shallow beam (Bending only)

Analysis of rectangular beam section to EC2 Part 3 and/or Part 1-1

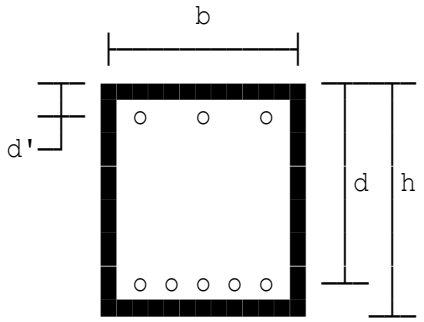

Section under consideration is assumed to be subjected primarily to bending.

b = breadth of section
d = effective depth to tension reinforcement
d'= depth to compression reinforcement

Design partial safety factor	gams=1.15 (reinforcement)
Design BM before redistribution	MEd'=45 kNm
Design BM after redistribution	MEd=45 kNm
Service moment (quasi-permanent)	My'=31.5 kNm
Maximum permissible crack width	wk=0.2 mm
Shear force due to ultimate loads	VEd=50 kN
Ultimate axial load (-ve tension)	NEd'=0 kN
Service axial load (-ve tension)	N'=0 kN
Characteristic steel strength	fyk=500 N/mm²
Overall depth of concrete section	h=250 mm
Breadth of concrete section	b=300 mm
Diameter of tension bars	diat=25 mm
Number of tension bars	ntb=3
Maximum dia.of coarse aggregate	hagg=20 mm
Diameter of shear links	dial=8 mm
Characteristic strength of links	fyv=500 N/mm²
Chosen effective depth of section	d=179.5 mm
Diameter of compression bars	diac=20 mm
Number of compression bars	ncb=2
Chosen depth to compression bars	d'=68 mm
Temp.fall: Hydrat.peak & ambient	T1=20 °C
Seasonal variation in temperature	T2=5 °C
Design shear stress	vEd=VEd*10^3/(0.9*bw*d)=1.032 N/mm²
Concrete strut capacity	vRdm=0.124*fck*(1-fck/250)=3.083 N/mm²
Angle of inclination of strut	theta'=22°
Number of shear legs	nsl=2
Chosen spacing	s=125 mm

SHEAR SUMMARY		
	Design shear force	**50 kN**
	Design shear stress	**1.032 N/mm²**
	Concrete strut capacity	**3.083 N/mm²**
	Area/spacing ratio	**0.2847**
	Diameter of links	**8 mm**
	Area of links	**100 mm²**
	Maximum spacing (based on 0.75d)	**134.6 mm**
	Actual spacing	**125 mm**

Shrinkage & thermal cracking caused by edge restrained to movement

For cracking due to restraint to movement the whole section will be considered to be in tension (i.e. the neutral axis depth is -∞).
Coefficient of thermal expansion aTc=12 με/°C
The area of tension and compression reinforcement provided exceeds the minimum area required to control thermal and shrinkage cracking. Hence satisfactory.

(A) Tension reinforcement:
Shrinkage strain (short-term) ecas=13.6 με
Shrinkage strain (long-term) ecal=45 με
The short-term crack width 0.0189 mm is less than the permissible value of 0.2 mm hence satisfactory.
The long-term crack width 0.0472 mm is less than the permissible value of 0.2 mm hence satisfactory.

(B) Compression reinforcement:
The short-term crack width 0.0275 mm is less than the permissible value of 0.2 mm hence satisfactory.
The long-term crack width 0.0688 mm is less than the permissible value of 0.2 mm hence satisfactory.

WARNING:
Spacing of bars is too great to satisfy service limit-state conditions.

Location: Ex5 From RC Design to EC2 by B Mosley p.150,edge restraint

Analysis of rectangular beam section to EC2 Part 3 and/or Part 1-1

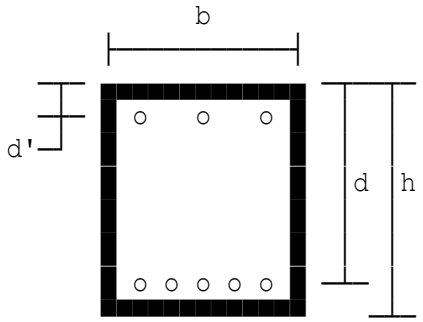

Section under consideration is assumed to be subjected primarily to bending.

b = breadth of section
d = effective depth to tension reinforcement
d'= depth to compression reinforcement

Design partial safety factor	gams=1.15 (reinforcement)
Design BM before redistribution	MEd'=780 kNm
Design BM after redistribution	MEd=780 kNm
Service moment (quasi-permanent)	My'=650 kNm
Maximum permissible crack width	wk=0.295 mm
Shear force due to ultimate loads	VEd=100 kN
Ultimate axial load (-ve tension)	NEd'=0 kN
Service axial load (-ve tension)	N'=0 kN
Characteristic steel strength	fyk=500 N/mm²
Overall depth of concrete section	h=1000 mm
Breadth of concrete section	b=400 mm
Diameter of tension bars	diat=40 mm
Number of tension bars	ntb=3
Maximum dia.of coarse aggregate	hagg=20 mm
Diameter of shear links	dial=10 mm
Characteristic strength of links	fyv=500 N/mm²
Chosen effective depth of section	d=930 mm
Diameter of compression bars	diac=25 mm
Number of compression bars	ncb=3
Chosen depth to compression bars	d'=62.5 mm
Temp.fall: Hydrat.peak & ambient	T1=39 °C
Seasonal variation in temperature	T2=20 °C
Design shear stress	vEd=VEd*10^3/(0.9*bw*d)=0.2987 N/mm²
Concrete strut capacity	vRdm=0.124*fck*(1-fck/250)=2.79 N/mm²
Angle of inclination of strut	theta'=22°
Number of shear legs	nsl=2
Chosen spacing	s=300 mm

SHEAR SUMMARY

Design shear force	**100 kN**
Design shear stress	**0.2987 N/mm²**
Concrete strut capacity	**2.79 N/mm²**
Area/spacing ratio	**0.32**
Diameter of links	**10 mm**
Area of links	**157 mm²**
Maximum spacing	**490 mm**
Actual spacing	**300 mm**

Shrinkage & thermal cracking caused by edge restrained to movement

For cracking due to restraint to movement the whole section will be considered to be in tension (i.e. the neutral axis depth is -∞).
Coefficient of thermal expansion aTc=12 με/°C
The area of tension and compression reinforcement provided exceeds the minimum area required to control thermal and shrinkage cracking. Hence satisfactory.

(A) Tension reinforcement:
Shrinkage strain (short-term) ecas=11.5 με
Shrinkage strain (long-term) ecal=37.5 με
The short-term crack width 0.0511 mm is less than the permissible value of 0.295 mm hence satisfactory.
The long-term crack width 0.1274 mm is less than the permissible value of 0.295 mm hence satisfactory.

(B) Compression reinforcement:
The short-term crack width 0.0641 mm is less than the permissible value of 0.295 mm hence satisfactory.
The long-term crack width 0.16 mm is less than the permissible value of 0.295 mm hence satisfactory.

WARNING:
Spacing of bars is too great to satisfy service limit-state conditions.

Location: Ex6 From RC Design to EC2 by B Mosley p.150, end restraint

Analysis of rectangular beam section to EC2 Part 3 and/or Part 1-1

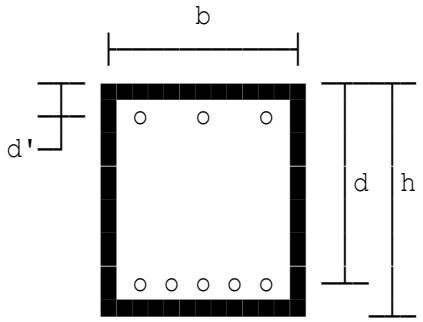

Section under consideration is assumed to be subjected primarily to bending.

b = breadth of section
d = effective depth to tension reinforcement
d'= depth to compression reinforcement

Design partial safety factor	gams=1.15 (reinforcement)
Design BM before redistribution	MEd'=780 kNm
Design BM after redistribution	MEd=780 kNm
Service moment (quasi-permanent)	My'=650 kNm
Maximum permissible crack width	wk=0.295 mm
Shear force due to ultimate loads	VEd=100 kN
Ultimate axial load (-ve tension)	NEd'=0 kN
Service axial load (-ve tension)	N'=0 kN
Characteristic steel strength	fyk=500 N/mm²
Overall depth of concrete section	h=1000 mm
Breadth of concrete section	b=400 mm
Diameter of tension bars	diat=40 mm
Number of tension bars	ntb=3
Maximum dia.of coarse aggregate	hagg=20 mm
Diameter of shear links	dial=10 mm
Characteristic strength of links	fyv=500 N/mm²
Chosen effective depth of section	d=930 mm
Diameter of compression bars	diac=25 mm
Number of compression bars	ncb=3
Chosen depth to compression bars	d'=62.5 mm
Temp.fall: Hydrat.peak & ambient	T1=39 °C
Seasonal variation in temperature	T2=20 °C
Design shear stress	vEd=VEd*10^3/(0.9*bw*d)=0.2987 N/mm²
Concrete strut capacity	vRdm=0.124*fck*(1-fck/250)=2.79 N/mm²
Angle of inclination of strut	theta'=22°
Number of shear legs	nsl=2
Chosen spacing	s=250 mm

SHEAR SUMMARY

Design shear force	**100 kN**
Design shear stress	**0.2987 N/mm²**
Concrete strut capacity	**2.79 N/mm²**
Area/spacing ratio	**0.32**
Diameter of links	**10 mm**
Area of links	**157 mm²**
Maximum spacing	**490 mm**
Actual spacing	**250 mm**

Shrinkage & thermal cracking caused by end restrained to movement

For cracking due to restraint to movement the whole section will be considered to be in tension (i.e. the neutral axis depth is -∞).
Coefficient of thermal expansion aTc=12 με/°C
The area of tension and compression reinforcement provided exceeds the minimum area required to control thermal and shrinkage cracking. Hence satisfactory.

(A) Tension reinforcement:
The short-term crack width 0.0869 mm is less than the permissible value of 0.295 mm hence satisfactory.
The long-term crack width 0.1477 mm is less than the permissible value of 0.295 mm hence satisfactory.

(B) Compression reinforcement:
The long-term crack width 0.1856 mm is less than the permissible value of 0.295 mm hence satisfactory.

WARNING:
Spacing of bars is too great to satisfy service limit-state conditions.

Location: Two way spanning wall slab with hydrostatic pressure

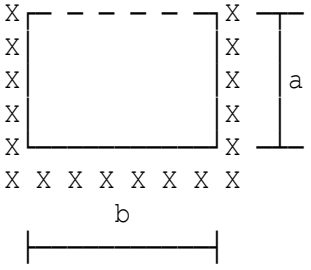

Free top & fixed at the other three sides

Coefficients are taken from Table 3 of 'Rectangular Concrete Tanks' published by Portland Cement Association (PCA) and reproduced by British Cement Association

Vertical height of wall	a=2 m
Horizontal length of wall	b=3 m
Density of fluid	w=10 kN/m³

BENDING MOMENTS FOR VERTICAL REINFORCEMENT (kNm/m)
(minus sign indicates tension on loaded side)

0	0	0	0	0
-0.72	0.32	0.64	0.32	-0.72
-0.64	0.8	1.28	0.8	-0.64
-0.4	0.24	0.24	0.24	-0.4
0	-3.28	-4.8	-3.28	0

BENDING MOMENTS FOR HORIZONTAL REINFORCEMENT (kNm/m)
(minus sign indicates tension on loaded side)

-3.2	0.4	1.68	0.4	-3.2
-3.52	0.56	1.6	0.56	-3.52
-3.36	0.64	1.28	0.64	-3.36
-2.08	0.32	0.48	0.32	-2.08
0	-0.64	-0.96	-0.64	0

SHEARS (kN/m & kN for totals)
(minus sign indicates reaction acts in direction of load)

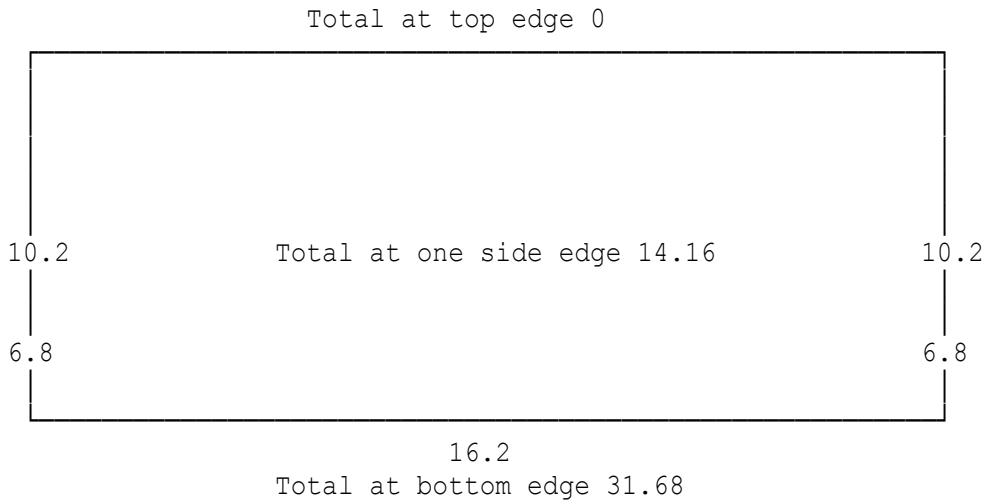

Location: Ex1 - Buried concrete (drainage works designated concrete)

Concrete specification to BS8500-1:2023

BS8500-1 contains additional United Kingdom provisions to be used in conjunction with BS EN 206. Together they form a complete package for the specification, production and conformity of fresh concrete.

Table references are to BS8500-1 unless noted otherwise. The method of determining the chloride content of fresh concrete is specified in BS EN 206:2013 (Clause 5.2.8, Table 15). Refer to BS8500-2:2023 Clauses 6.4 and 7.1 for further details relating to chloride content class for designated concrete and designed concrete respectively.

This is a natural site and does not contain chemical residues remaining from previous industrial use or from imported wastes i.e. this is not a "brownfield" site.

Sulphate value	SO4=680 mg/l
pH value	pH=3.5
Magnesium value	Mg=0 mg/l

Designated concrete specification - unreinforced

Designated concrete from Table A.14	FND2
Minimum strength class Table A.15	C25/30
Maximum water-cement ratio	0.55
Minimum cement content	320 kg/m³
Cement/combination types (see Table A.6)	D1,D2,D3,E4,F4
Maximum aggregate size	20 mm
Target density	NWC density
Lowest nominal cover (where Δc=deviation)	(25+Δc) mm

Deviation at least 15 mm for concrete cast against blinding.
Deviation at least 50 mm for concrete cast directly against the soil.

The user of the concrete should select the required consistence class and inform the specifier for inclusion into the specification.
Designated concrete to conform to BS8500-2:2023.

Location: Ex2 - Buried concrete (drainage works designated concrete)

Concrete specification to BS8500-1:2023

BS8500-1 contains additional United Kingdom provisions to be used in conjunction with BS EN 206. Together they form a complete package for the specification, production and conformity of fresh concrete.

Table references are to BS8500-1 unless noted otherwise. The method of determining the chloride content of fresh concrete is specified in BS EN 206:2013 (Clause 5.2.8, Table 15). Refer to BS8500-2:2023 Clauses 6.4 and 7.1 for further details relating to chloride content class for designated concrete and designed concrete respectively.

This is a "brownfield" site i.e. contain chemical residues remaining from previous industrial use or from imported wastes.

Sulphate value	SO4=680 mg/l
pH value	pH=7
Magnesium value	Mg=0 mg/l

Designated concrete specification - reinforced

The user of the concrete should select the required consistence class and inform the specifier for inclusion into the specification.
Designated concrete to conform to BS8500-2:2023.

Location: Ex3 - Buried concrete (drainage works designed concrete)

Concrete specification to BS8500-1:2023

BS8500-1 contains additional United Kingdom provisions to be used in conjunction with BS EN 206. Together they form a complete package for the specification, production and conformity of fresh concrete.

Table references are to BS8500-1 unless noted otherwise. The method of determining the chloride content of fresh concrete is specified in BS EN 206:2013 (Clause 5.2.8, Table 15). Refer to BS8500-2:2023 Clauses 6.4 and 7.1 for further details relating to chloride content class for designated concrete and designed concrete respectively.

This is a natural site and does not contain chemical residues remaining from previous industrial use or from imported wastes i.e. this is not a "brownfield" site.

Sulphate value	SO4=680 mg/l
pH value	pH=7
Magnesium value	Mg=0 mg/l

Concrete exposure class

Designed concrete specification - reinforced

The user of the concrete should select the required consistence class and inform the specifier for inclusion into the specification.
Designed concrete to conform to BS8500-2:2023. Use Table 1 of BS8500-2 for the selection of the cement and combination types.

Location: Ex4 - General applications (designated concrete)

Concrete specification to BS8500-1:2023

BS8500-1 contains additional United Kingdom provisions to be used in conjunction with BS EN 206. Together they form a complete package for the specification, production and conformity of fresh concrete.

Table references are to BS8500-1 unless noted otherwise. The method of determining the chloride content of fresh concrete is specified in BS EN 206:2013 (Clause 5.2.8, Table 15). Refer to BS8500-2:2023 Clauses 6.4 and 7.1 for further details relating to chloride content class for designated concrete and designed concrete respectively.

Designated concrete specification

Concrete designation from Table A.14	GEN0 (or equivalent)
Minimum strength class from Table A.15	C6/8
Maximum water-cement ratio	-
Minimum cement content	120 kg/m³
Cement/combination types	All in Table A.6 except IIIB AND IIIC
Maximum aggregate size	20 mm
Target density	NWC density

The user of the concrete should select the required consistence class and inform the specifier for inclusion into the specification. Designated concrete to conform to BS8500-2:2023.

Equivalent alternative:
Standardised prescribed concretes may be used as an alternative to GEN series of designated concretes. The table below (extracted from Table A.14 in BS8500-1:2023) shows equivalent Standardised prescribed concrete alternatives. ST1 and ST2 concrete should not be specified where the concrete is to contain carbon reinforcing steel or embedded metal, as the chloride class for these concretes is Cl 1.00 (see A.4.7 of Annex A).

Designated concrete	GEN0	GEN1	GEN2	GEN3	RC28/35
Standardised prescribed concrete	ST1	ST2	ST3	ST4	ST5

For guidance on the selection of Standardised prescribed concrete refer to BS8500-1:2023 Annex A (informative) A.4.7 & section 4.5 for drafting of specification.

Location: Ex5 - Ground floor (designated concrete)

Concrete specification to BS8500-1:2023

BS8500-1 contains additional United Kingdom provisions to be used in conjunction with BS EN 206. Together they form a complete package for the specification, production and conformity of fresh concrete.

Table references are to BS8500-1 unless noted otherwise. The method of determining the chloride content of fresh concrete is specified in BS EN 206:2013 (Clause 5.2.8, Table 15). Refer to BS8500-2:2023 Clauses 6.4 and 7.1 for further details relating to chloride content class for designated concrete and designed concrete respectively.

Designated concrete specification

Concrete designation from Table A.14	RC40/50
Minimum strength class from Table A.15	C40/50
Maximum water-cement ratio	0.45
Minimum cement content	340 kg/m³
Cement/combination types	All in Table A.6 except IIIB AND IIIC
Maximum aggregate size	20 mm
Target density	NWC density

The user of the concrete should select the required consistence class and inform the specifier for inclusion into the specification.
Designated concrete to conform to BS8500-2:2023.

Location: Ex6 - Paving (designated concrete)

Concrete specification to BS8500-1:2023

BS8500-1 contains additional United Kingdom provisions to be used in conjunction with BS EN 206. Together they form a complete package for the specification, production and conformity of fresh concrete.

Table references are to BS8500-1 unless noted otherwise. The method of determining the chloride content of fresh concrete is specified in BS EN 206:2013 (Clause 5.2.8, Table 15). Refer to BS8500-2:2023 Clauses 6.4 and 7.1 for further details relating to chloride content class for designated concrete and designed concrete respectively.

Designated concrete specification

Concrete designation from Table A.14	PAV2
Minimum strength class from Table A.15	C32/40
Maximum water-cement ratio	0.45
Minimum cement content	340 kg/m³
Cement/combination types (see Table A.6)	CEM-I,IIA,IIB-S,IIB-P,IIB-Q IIB-V,IIB-M,IIC-M,IIIA
Maximum aggregate size	20 mm
Target density	NWC density

The user of the concrete should select the required consistence class and inform the specifier for inclusion into the specification.
Designated concrete to conform to BS8500-2:2023.

Location: Ex7 - Non-buried concrete (designated concrete)

Concrete specification to BS8500-1:2023

BS8500-1 contains additional United Kingdom provisions to be used in conjunction with BS EN 206. Together they form a complete package for the specification, production and conformity of fresh concrete.

Table references are to BS8500-1 unless noted otherwise. The method of determining the chloride content of fresh concrete is specified in BS EN 206:2013 (Clause 5.2.8, Table 15). Refer to BS8500-2:2023 Clauses 6.4 and 7.1 for further details relating to chloride content class for designated concrete and designed concrete respectively.

Concrete exposure class

Designated concrete specification

The user of the concrete should select the required consistence class and inform the specifier for inclusion into the specification. Designated concrete to conform to BS8500-2:2023. Use Table 1 of BS8500-2 for the selection of the cement and combination types.

Location: Ex8 - Non-buried concrete (designed concrete)

Concrete specification to BS8500-1:2023

BS8500-1 contains additional United Kingdom provisions to be used in conjunction with BS EN 206. Together they form a complete package for the specification, production and conformity of fresh concrete.

Table references are to BS8500-1 unless noted otherwise. The method of determining the chloride content of fresh concrete is specified in BS EN 206:2013 (Clause 5.2.8, Table 15). Refer to BS8500-2:2023 Clauses 6.4 and 7.1 for further details relating to chloride content class for designated concrete and designed concrete respectively.

Concrete exposure class

Designed concrete specification

The user of the concrete should select the required consistence class and inform the specifier for inclusion into the specification.
Designed concrete to conform to BS8500-2:2023. Use Table 1 of BS8500-2 for the selection of the cement and combination types.

Location: Ex9 - Buried concrete (designated concrete)

Concrete specification to BS8500-1:2023

BS8500-1 contains additional United Kingdom provisions to be used in conjunction with BS EN 206. Together they form a complete package for the specification, production and conformity of fresh concrete.

Table references are to BS8500-1 unless noted otherwise. The method of determining the chloride content of fresh concrete is specified in BS EN 206:2013 (Clause 5.2.8, Table 15). Refer to BS8500-2:2023 Clauses 6.4 and 7.1 for further details relating to chloride content class for designated concrete and designed concrete respectively.

This is a "brownfield" site i.e. contain chemical residues remaining from previous industrial use or from imported wastes.

Designated concrete specification - unreinforced

Designated concrete from Table A.14	FND4
Minimum strength class Table A.15	C25/30
Maximum water-cement ratio	0.45
Minimum cement content	360 kg/m³
Cement/combination types (see Table A.6)	F4
Maximum aggregate size	20 mm
Target density	NWC density
Lowest nominal cover (where Δc=deviation)	(25+Δc) mm

Deviation at least 15 mm for concrete cast against blinding.
Deviation at least 50 mm for concrete cast directly against the soil.

The user of the concrete should select the required consistence class and inform the specifier for inclusion into the specification.
Designated concrete to conform to BS8500-2:2023.

Location: Ex10 - Buried concrete (designated concrete)

Concrete specification to BS8500-1:2023

BS8500-1 contains additional United Kingdom provisions to be used in conjunction with BS EN 206. Together they form a complete package for the specification, production and conformity of fresh concrete.

Table references are to BS8500-1 unless noted otherwise. The method of determining the chloride content of fresh concrete is specified in BS EN 206:2013 (Clause 5.2.8, Table 15). Refer to BS8500-2:2023 Clauses 6.4 and 7.1 for further details relating to chloride content class for designated concrete and designed concrete respectively.

This is a natural site and does not contain chemical residues remaining from previous industrial use or from imported wastes i.e. this is not a "brownfield" site.

Sulphate value	SO4=1200 mg/l
pH value	pH=7
Magnesium value	Mg=0 mg/l

Designated concrete specification - unreinforced

Designated concrete from Table A.14	FND2
Minimum strength class Table A.15	C25/30
Maximum water-cement ratio	0.55
Minimum cement content	320 kg/m³
Cement/combination types (see Table A.6)	D1,D2,D3,E4,F4
Maximum aggregate size	20 mm
Target density	NWC density
Lowest nominal cover (where Δc=deviation)	(25+Δc) mm

Deviation at least 15 mm for concrete cast against blinding.
Deviation at least 50 mm for concrete cast directly against the soil.

The user of the concrete should select the required consistence class and inform the specifier for inclusion into the specification.
Designated concrete to conform to BS8500-2:2023.

Location: Ex11 - Buried concrete (designated concrete)

Concrete specification to BS8500-1:2023

BS8500-1 contains additional United Kingdom provisions to be used in conjunction with BS EN 206. Together they form a complete package for the specification, production and conformity of fresh concrete.

Table references are to BS8500-1 unless noted otherwise. The method of determining the chloride content of fresh concrete is specified in BS EN 206:2013 (Clause 5.2.8, Table 15). Refer to BS8500-2:2023 Clauses 6.4 and 7.1 for further details relating to chloride content class for designated concrete and designed concrete respectively.

This is a natural site and does not contain chemical residues remaining from previous industrial use or from imported wastes i.e. this is not a "brownfield" site.

Sulphate value	SO4=1200 mg/l
pH value	pH=3.2
Magnesium value	Mg=0 mg/l

Designated concrete specification - reinforced

The user of the concrete should select the required consistence class and inform the specifier for inclusion into the specification.
Designated concrete to conform to BS8500-2:2023.

Location: Ex12 - Non-buried concrete (designed concrete)

Concrete specification to BS8500-1:2023

BS8500-1 contains additional United Kingdom provisions to be used in conjunction with BS EN 206. Together they form a complete package for the specification, production and conformity of fresh concrete.

Table references are to BS8500-1 unless noted otherwise. The method of determining the chloride content of fresh concrete is specified in BS EN 206:2013 (Clause 5.2.8, Table 15). Refer to BS8500-2:2023 Clauses 6.4 and 7.1 for further details relating to chloride content class for designated concrete and designed concrete respectively.

Concrete exposure class

Designed concrete specification

The user of the concrete should select the required consistence class and inform the specifier for inclusion into the specification.
Designed concrete to conform to BS8500-2:2023. Use Table 1 of BS8500-2 for the selection of the cement and combination types.

Location: Ex13 - Non-buried concrete (designed concrete)

Concrete specification to BS8500-1:2023

BS8500-1 contains additional United Kingdom provisions to be used in conjunction with BS EN 206. Together they form a complete package for the specification, production and conformity of fresh concrete.

Table references are to BS8500-1 unless noted otherwise. The method of determining the chloride content of fresh concrete is specified in BS EN 206:2013 (Clause 5.2.8, Table 15). Refer to BS8500-2:2023 Clauses 6.4 and 7.1 for further details relating to chloride content class for designated concrete and designed concrete respectively.

Concrete exposure class

Designed concrete specification

The user of the concrete should select the required consistence class and inform the specifier for inclusion into the specification.
Designed concrete to conform to BS8500-2:2023. Use Table 1 of BS8500-2 for the selection of the cement and combination types.

This schedule complies with the requirements of BS8666:2005.

Member	Bar mark	Type and size	No. of mbr	No. of bar	Total no.	Lngth ofbar (mm)	Shape code	A (mm)	B (mm)	C (mm)	D (mm)	E/R (mm)	Rev ltr
All bars test													
	01	H6	1	1	1	1000	00						
	02	H6	1	1	1	20000	01						
	03	H6	1	1	1	1500	11	500					
	04	H6	1	1	1	1375	12	500				250	
	05	H6	1	1	1	1825	13	1000	400				
	06	H6	1	1	1	1975	14	1000	200				
	07	H6	1	1	1	2000	15	1000	200				
	08	H6	1	1	1	1875	21	500	1000				
	09	H6	1	1	1	2175	22	500	1000	400			
	10	H6	1	1	1	1975	23	500	1000				
	11	H6	1	1	1	1700	24	500	800		300		
	12	H6	1	1	1	1500	25	500	500	200	200		
	13	H6	1	1	1	1800	26	800	500		200		
	14	H6	1	1	1	1550	27	800	500		300		
	15	H6	1	1	1	1600	28	800	600		350		
	16	H6	1	1	1	1675	29	900	300		400		
	17	H6	1	1	1	2075	31	500	600	700			
	18	H6	1	1	1	1775	32	200	200	1200			
	19	H6	1	1	1	2925	33	1000	200				
	20	H6	1	1	1	1650	34	300	500	500	400		
	21	H6	1	1	1	1450	35	300	500	500	400		
	22	H6	1	1	1	1675	36	300	500	500		150	
	23	H6	1	1	1	2300	41	300	500	800	400		
	24	H6	1	1	1	1750	44	200	500	500	400		
	25	H6	1	1	1	2500	46	500	500	500	200		
	26	H6	1	1	1	1800	47	500	500				
	27	H6	1	1	1	2200	51	500	500				
	28	H6	1	1	1	1900	56	500	500	300			
	29	H6	1	1	1	2675	63	500	500				
	30	H6	1	1	1	2825	64	500	300	800	400	350	
	31	H6	1	1	1	1000	67	1000				2000	
	32	H6	1	1	1	1325	75	300					
	33	H6	1	1	1	11075	77	300	50	12			
	34	H6	1	1	1	1750	98	800	300	200			
								400					

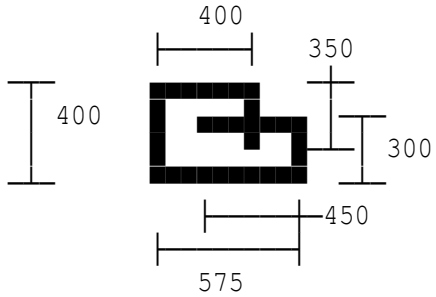

	35	H6	1	1	1	2400	99						

All bars test

Location: Example A.1 in 'Reinf. Concrete Design to BS8110' by Allen

Properties of transformed sections of reinforced concrete

Formulae for transformed section taken from Table 136 in 10th edition of 'Reinforced Concrete Designer's Handbook' by Reynolds and Steedman.

Rectangular cracked section (and flanged section where x ≤ hf)

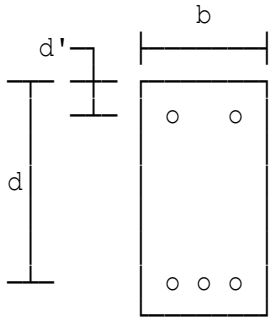

A's = area of steel in compression

As = area of steel in tension

Width of section	b=1000 mm
Modular ratio	alphae=7
Tension reinforcement:	
Depth to centroid of steel	d=124 mm
Size of bars	diat=12 mm
Spacing of bars	spct=200 mm
Area of tension steel	As=diat^2*PI/4*b/spct=565.49 mm²
Compression reinforcement:	
Depth to centroid of steel	d'=25 mm
Area of compression steel	A's=0 mm²
Depth to neutral axis	x=d*SQR(c3^2+2*(c2+c1*d'/d))-d*c3 =27.623 mm
Second moment of area	Ie=c5*(c4^3/3+c2*(1-c4)^2+c1*c6^2) =43.793E6 mm⁴

Location: Pier section at foundation

Elastic biaxial bending of a rectangular RC section

Units used in the calculations:

Input	Dimensions and bar diameters	mm
	Forces	kN
	Bending moments	kNm
Output	Dimensions and co-ordinates	mm
	Stresses	N/mm²

Sign Convention for loading
A positive axial load causes compression in the section.
A positive moment is clockwise about the x or y axes.

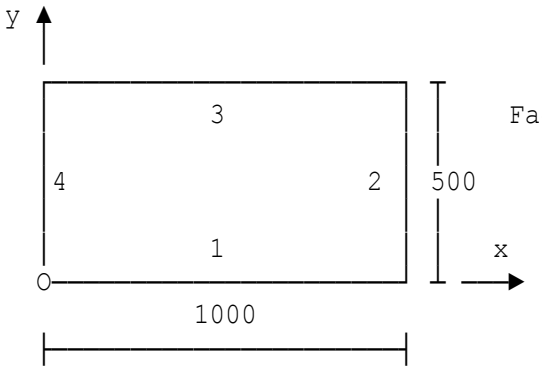

Face Numbers and Co-ordinate Axes

Length of Faces 1 and 3 1000 mm
Length of Faces 2 and 4 500 mm

Face 1	Number of bars	Bar diameter	Edge distances to centre of bars		
Layer			Face 4	Face 1	Face 2
1	4	16	60	60	60
2	3	12	206	60	206

Face 2	Number of bars	Bar diameter	Edge distances to centre of bars		
Layer			Face 1	Face 2	Face 3
1	3	12	155	60	155

Face 3	Number of bars	Bar diameter	Edge distances to centre of bars		
Layer			Face 2	Face 3	Face 4
1	4	16	60	60	60
2	3	12	206	60	206

Face 4	Number of bars	Bar diameter	Edge distances to centre of bars		
Layer			Face 3	Face 4	Face 1
1	3	12	155	60	155

Modular ratio mr=15

Plot of Section Details

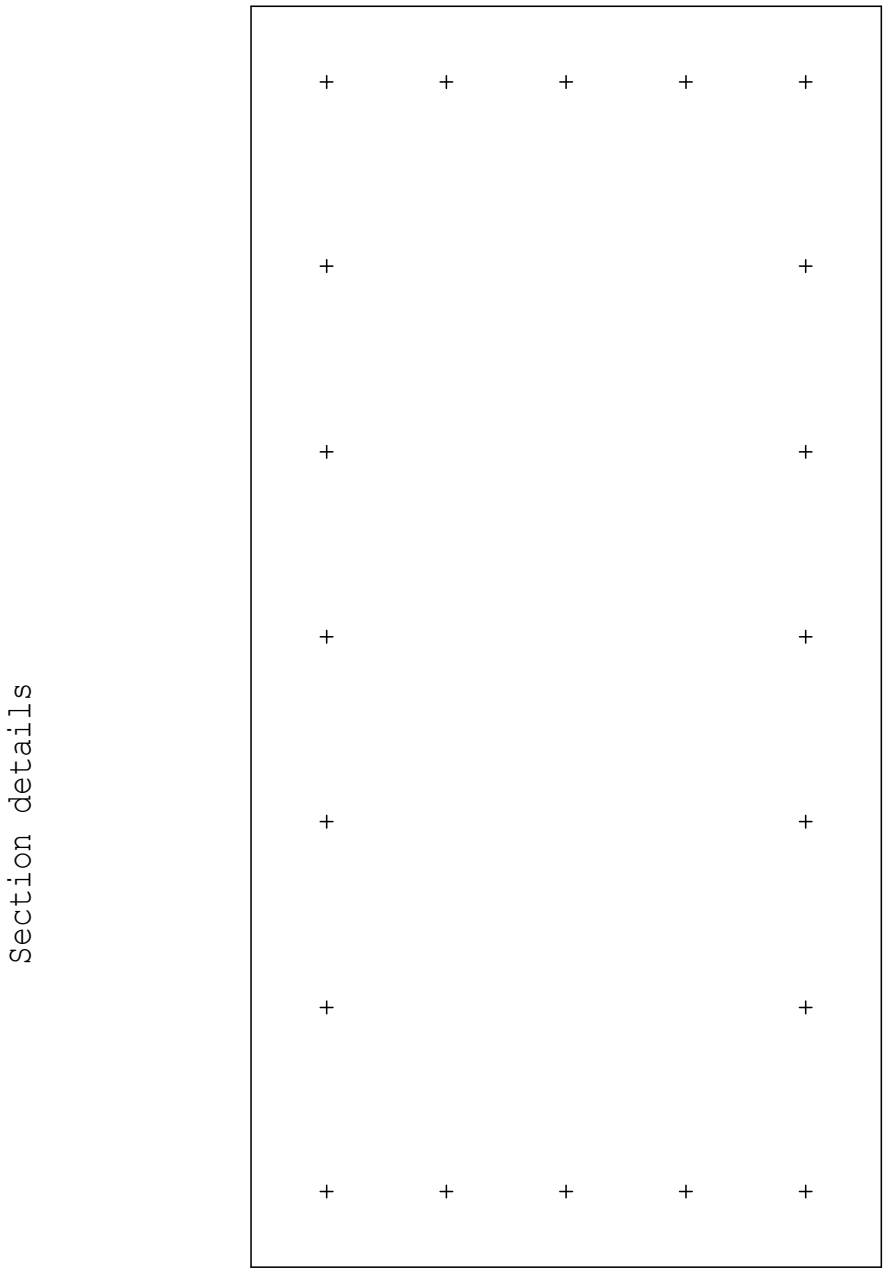

Loading Case 1

Axial Load	P(1)=1000 kN
Axial load fixed in position.	
x co-ordinate	xp(1)=600 mm
y co-ordinate	yp(1)=300 mm

Applied moments

About x axis	Amx(1)=-200 kNm
About y axis	Amy(1)=300 kNm

Plot of Cracked Section

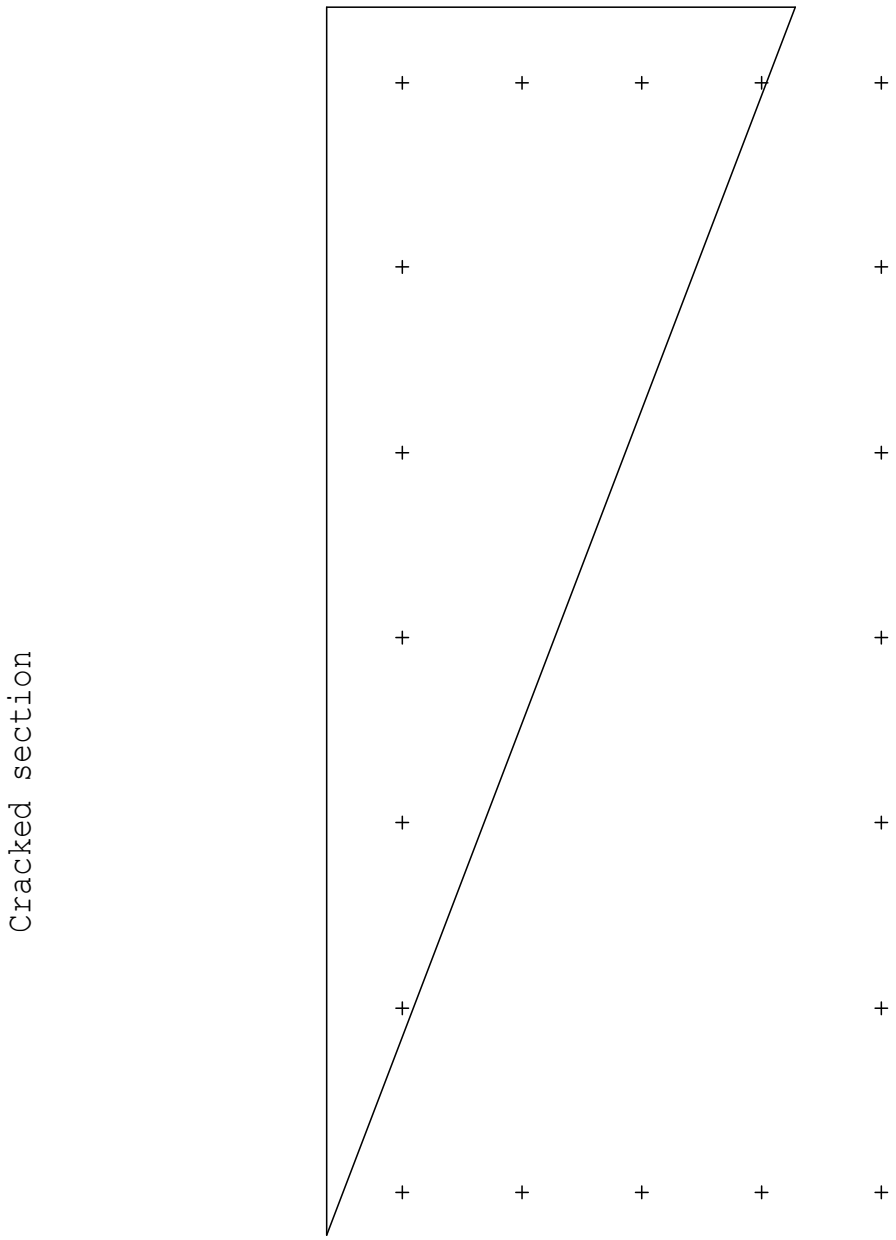

Section is cracked

Neutral axis line

Face 3 x=26.075 y=500
Face 2 x=1000 y=128.29

Centroid of stressed section X=640.51 Y=351

Design bending moments at centroid of stressed section

About x axis Dmx=-P(z)*(yp(z)-Y)/1000+Amx(z)
=-149 kNm
About y axis Dmy=P(z)*(xp(z)-X)/1000+Amy(z)
=259.49 kNm

Concrete stresses

Corner	Co-ordinates x	Co-ordinates y	Stress (N/mm²)
3	1000	500	19.389

Reinforcement bar stresses. Tension negative, Compression positive.

Bar No.	Face	Layer	Co-ordinates x (mm)	Co-ordinates y (mm)	Diameter (mm)	Stress (N/mm²)
1	1	1	60	60	16	-334.13
2	1	1	353.33	60	16	-246.53
3	1	1	646.67	60	16	-158.94
4	1	1	940	60	16	-71.347
5	1	2	206	60	12	-290.53
6	1	2	500	60	12	-202.74
7	1	2	794	60	12	-114.94
8	2	1	940	155	12	2.9818
9	2	1	940	250	12	77.31
10	2	1	940	345	12	151.64
11	3	1	60	440	16	-36.814
12	3	1	353.33	440	16	50.78
13	3	1	646.67	440	16	138.37
14	3	1	940	440	16	225.97
15	3	2	206	440	12	6.7841
16	3	2	500	440	12	94.577
17	3	2	794	440	12	182.37
18	4	1	60	155	12	-259.8
19	4	1	60	250	12	-185.47
20	4	1	60	345	12	-111.14

Number of iterations 7

Location: Uncracked section

Elastic biaxial bending of a rectangular RC section

Units used in the calculations:

Input	Dimensions and bar diameters	mm
	Forces	kN
	Bending moments	kNm
Output	Dimensions and co-ordinates	mm
	Stresses	N/mm²

Sign Convention for loading
A positive axial load causes compression in the section.
A positive moment is clockwise about the x or y axes.

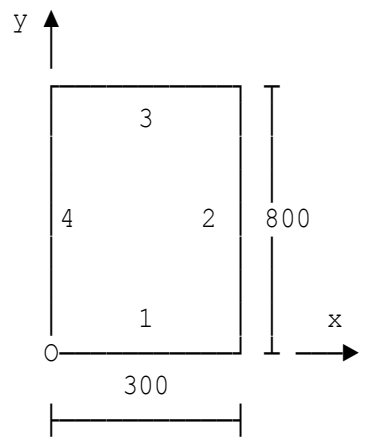

Face Numbers and Co-ordinate Axes

Length of Faces 1 and 3 300 mm
Length of Faces 2 and 4 800 mm

Face 1	Number of bars	Bar diameter	Edge distances to centre of bars		
Layer			Face 4	Face 1	Face 2
1	4	12	65	65	65

Face 2	Number of bars	Bar diameter	Edge distances to centre of bars		
Layer			Face 1	Face 2	Face 3
1	5	12	140	65	140

Face 3	Number of bars	Bar diameter	Edge distances to centre of bars		
Layer			Face 2	Face 3	Face 4
1	4	12	65	65	65

Face 4	Number of bars	Bar diameter	Edge distances to centre of bars		
Layer			Face 3	Face 4	Face 1
1	5	12	140	65	140

Modular ratio mr=15

Plot of Section Details

Section details

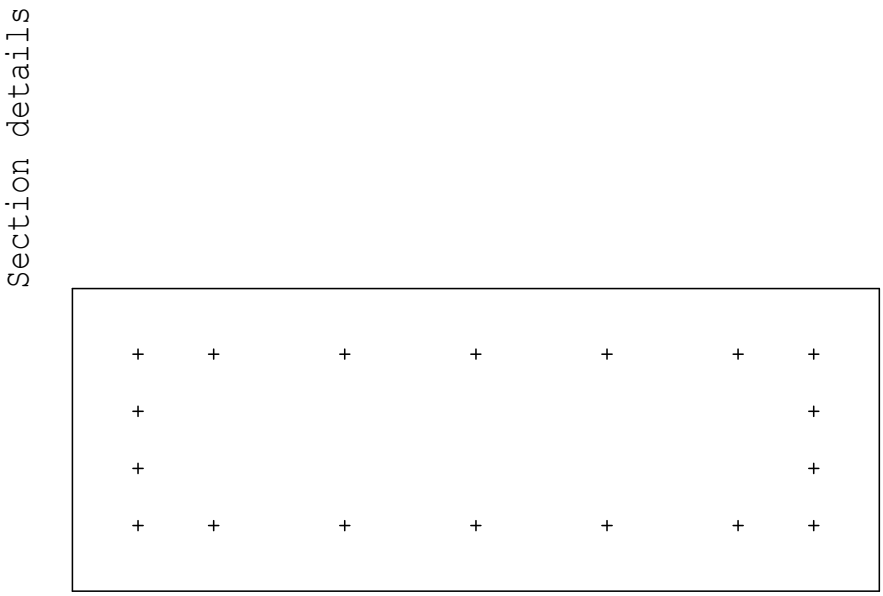

Loading Case 1

Axial Load P(1)=1000 kN
Axial load fixed in position.

x co-ordinate xp(1)=155 mm
y co-ordinate yp(1)=450 mm

Applied moments

About x axis Amx(1)=0 kNm
About y axis Amy(1)=0 kNm

All of section in compression

Centroid of stressed section X=150 Y=400

Design bending moments at centroid of stressed section

About x axis Dmx=-P(z)*(yp(z)-Y)/1000+Amx(z)
=-50 kNm
About y axis Dmy=P(z)*(xp(z)-X)/1000+Amy(z)=5 kNm

Concrete stresses

Corner	Co-ordinates x	Co-ordinates y	Stress (N/mm²)
1	0	0	1.9875
2	300	0	2.7507
3	300	800	5.4613
4	0	800	4.6981

Maximum and minimum reinforcement bar stresses.
Tension negative, Compression positive.

Bar No.	Face	Layer	Co-ordinates x (mm)	Co-ordinates y (mm)	Diameter (mm)	Stress (N/mm²)
Minimum						
1	1	1	65	65	12	35.597
Maximum						
13	3	1	235	735	12	76.135

Location: Fully cracked section

Elastic biaxial bending of a rectangular RC section

Units used in the calculations:

Input	Dimensions and bar diameters	mm
	Forces	kN
	Bending moments	kNm
Output	Dimensions and co-ordinates	mm
	Stresses	N/mm²

Sign Convention for loading
A positive axial load causes compression in the section.
A positive moment is clockwise about the x or y axes.

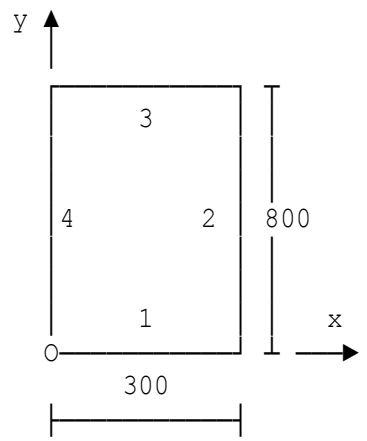

Face Numbers and Co-ordinate Axes

Length of Faces 1 and 3 300 mm
Length of Faces 2 and 4 800 mm

Face 1	Number of bars	Bar diameter	Edge distances to centre of bars		
Layer			Face 4	Face 1	Face 2
1	4	12	65	65	65

Face 2	Number of bars	Bar diameter	Edge distances to centre of bars		
Layer			Face 1	Face 2	Face 3
1	5	12	140	65	140

Face 3	Number of bars	Bar diameter	Edge distances to centre of bars		
Layer			Face 2	Face 3	Face 4
1	4	12	65	65	65

Face 4	Number of bars	Bar diameter	Edge distances to centre of bars		
Layer			Face 3	Face 4	Face 1
1	5	12	140	65	140

Modular ratio mr=15

Plot of Section Details

Section details

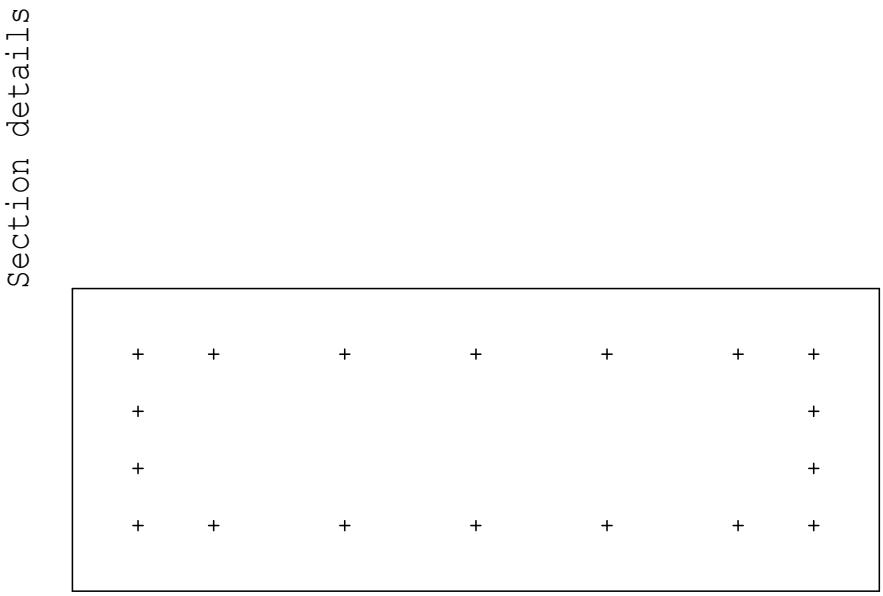

Loading Case 1

Axial Load P(1)=-500 kN
Axial load fixed in position.

x co-ordinate xp(1)=155 mm
y co-ordinate yp(1)=450 mm

Applied moments

About x axis Amx(1)=0 kNm
About y axis Amy(1)=0 kNm

All of section in tension

Centroid of stressed section X=150 Y=400

Design bending moments at centroid of stressed section

About x axis Dmx=-P(z)*(yp(z)-Y)/1000+Amx(z)=25 kNm
About y axis Dmy=P(z)*(xp(z)-X)/1000+Amy(z)
=-2.5 kNm

Maximum and minimum reinforcement bar stresses.
Tension negative, Compression positive.

Bar No.	Face	Layer	Co-ordinates x (mm)	y (mm)	Diameter (mm)	Stress (N/mm²)
Minimum						
13	3	1	235	735	12	-323.5
Maximum						
1	1	1	65	65	12	-167.72

Location: Cracked section. Axial load moves to centroid.

Elastic biaxial bending of a rectangular RC section

Units used in the calculations:

Input	Dimensions and bar diameters	mm
	Forces	kN
	Bending moments	kNm
Output	Dimensions and co-ordinates	mm
	Stresses	N/mm²

Sign Convention for loading
A positive axial load causes compression in the section.
A positive moment is clockwise about the x or y axes.

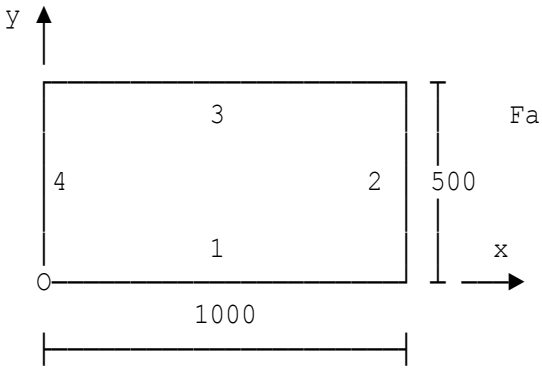

Face Numbers and Co-ordinate Axes

Length of Faces 1 and 3 1000 mm
Length of Faces 2 and 4 500 mm

Face 1	Number of bars	Bar diameter	Edge distances to centre of bars		
Layer			Face 4	Face 1	Face 2
1	4	16	60	60	60
2	3	12	206	60	206

Face 2	Number of bars	Bar diameter	Edge distances to centre of bars		
Layer			Face 1	Face 2	Face 3
1	3	12	155	60	155

Face 3	Number of bars	Bar diameter	Edge distances to centre of bars		
Layer			Face 2	Face 3	Face 4
1	4	16	60	60	60
2	3	12	206	60	206

Face 4	Number of bars	Bar diameter	Edge distances to centre of bars		
Layer			Face 3	Face 4	Face 1
1	3	12	155	60	155

Modular ratio mr=15

Plot of Section Details

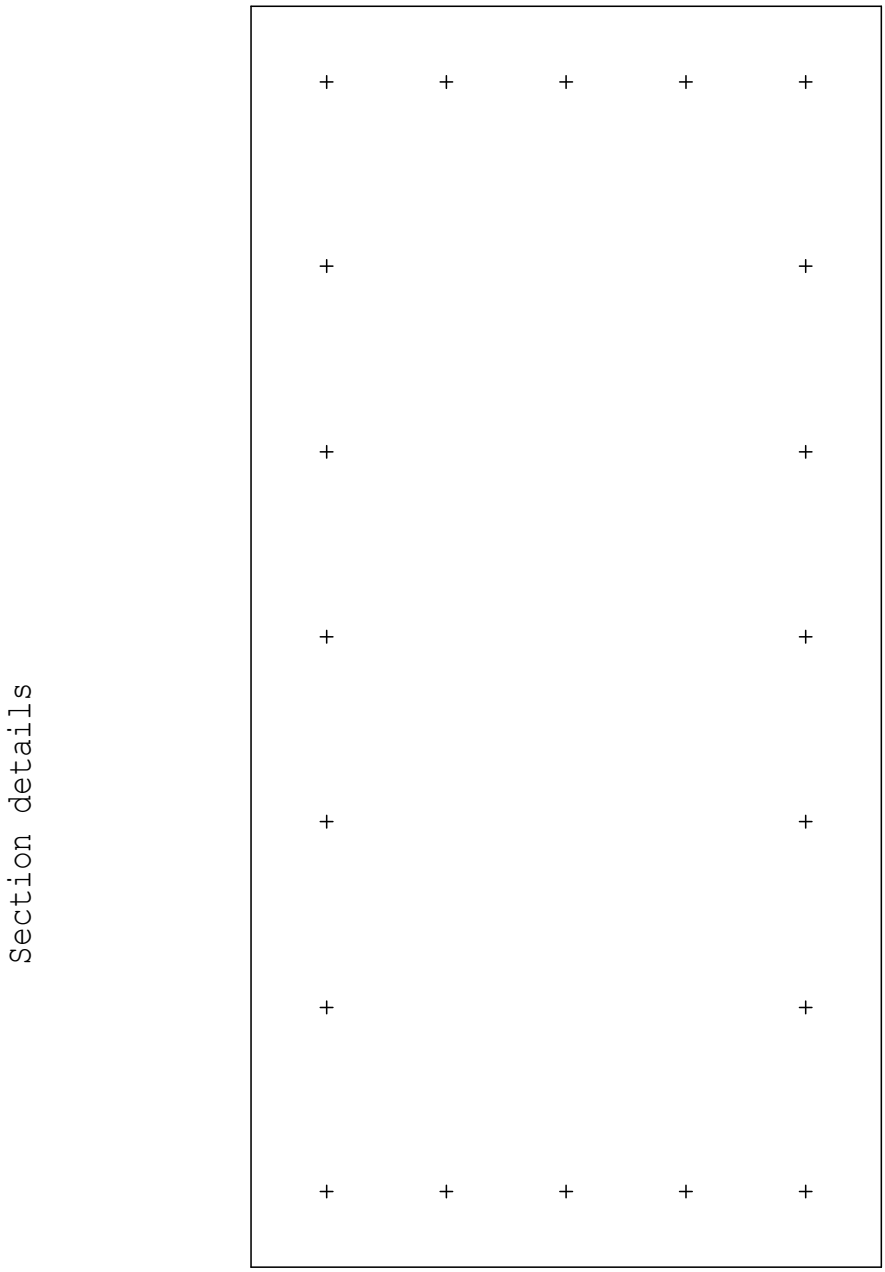

Copyright 1986-2024 Fitzroy Systems Ltd.

Loading Case 1

Axial Load P(1)=1000 kN
Axial load applied at centroid of stressed section.

Applied moments

About x axis Amx(1)=-200 kNm
About y axis Amy(1)=300 kNm

Plot of Cracked Section

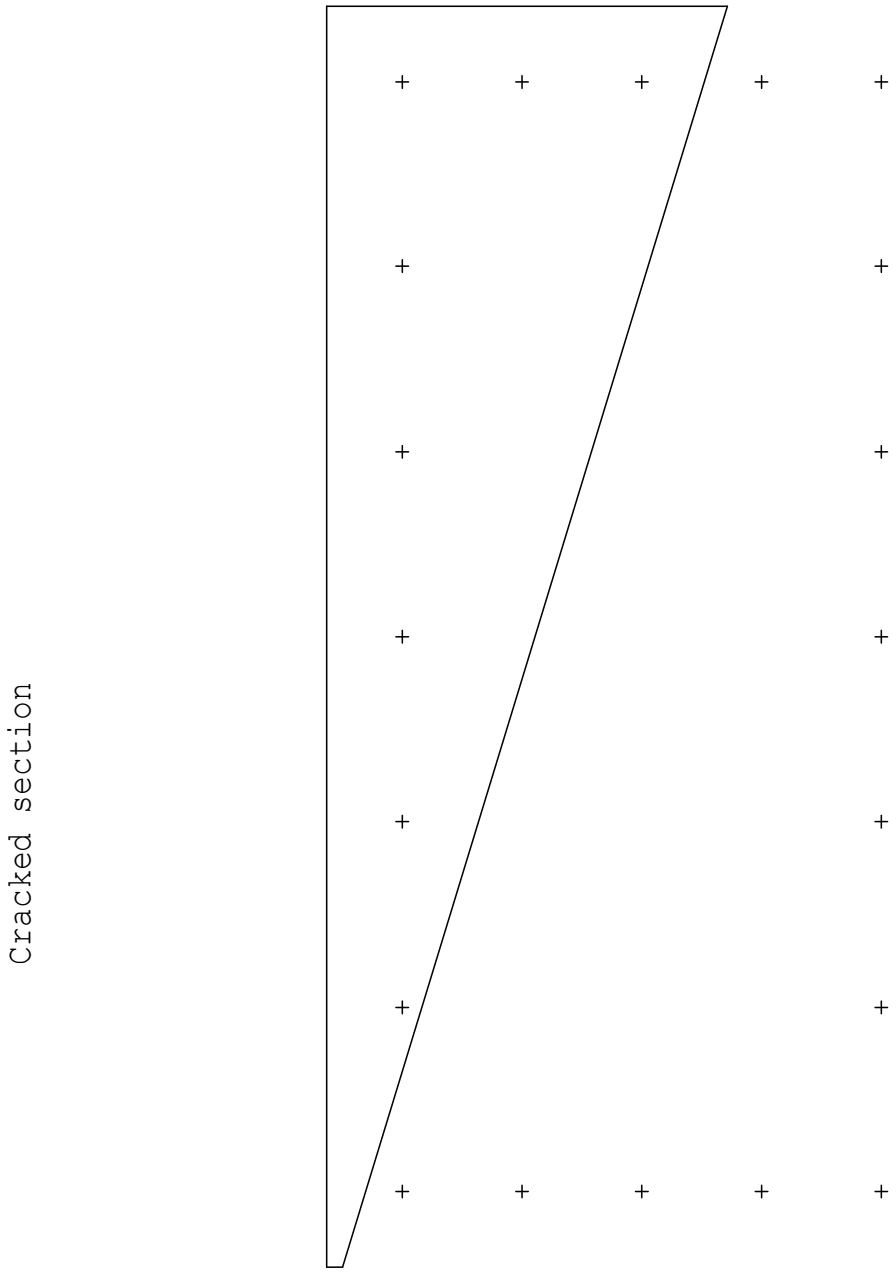

Section is cracked

Neutral axis line

Face 4 x=0 y=487.34
Face 2 x=1000 y=182.08

Centroid of stressed section X=621.09 Y=363.07

Design bending moments at centroid of stressed section

About x axis Dmx=Amx(z)=-200 kNm
About y axis Dmy=Amy(z)=300 kNm

Concrete stresses

Corner	Co-ordinates x	Co-ordinates y	Stress (N/mm²)
3	1000	500	23.331
4	0	500	0.92935

Reinforcement bar stresses. Tension negative, Compression positive.

Bar No.	Face	Layer	Co-ordinates x (mm)	Co-ordinates y (mm)	Diameter (mm)	Stress (N/mm²)
1	1	1	60	60	16	-450.24
2	1	1	353.33	60	16	-351.68
3	1	1	646.67	60	16	-253.11
4	1	1	940	60	16	-154.55
5	1	2	206	60	12	-401.18
6	1	2	500	60	12	-302.39
7	1	2	794	60	12	-203.6
8	2	1	940	155	12	-49.972
9	2	1	940	250	12	54.603
10	2	1	940	345	12	159.18
11	3	1	60	440	16	-31.946
12	3	1	353.33	440	16	66.62
13	3	1	646.67	440	16	165.19
14	3	1	940	440	16	263.75
15	3	2	206	440	12	17.113
16	3	2	500	440	12	115.9
17	3	2	794	440	12	214.69
18	4	1	60	155	12	-345.67
19	4	1	60	250	12	-241.09
20	4	1	60	345	12	-136.52

Number of iterations 11

Copyright 1986-2024 Fitzroy Systems Ltd.

Location: Uncracked section. Axial load moves to centroid.

Elastic biaxial bending of a rectangular RC section

Units used in the calculations:

Input	Dimensions and bar diameters	mm
	Forces	kN
	Bending moments	kNm
Output	Dimensions and co-ordinates	mm
	Stresses	N/mm²

Sign Convention for loading
A positive axial load causes compression in the section.
A positive moment is clockwise about the x or y axes.

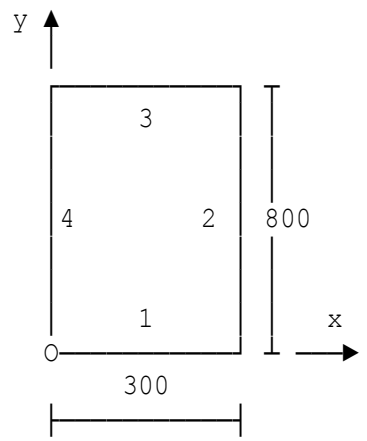

Face Numbers and Co-ordinate Axes

Length of Faces 1 and 3 300 mm
Length of Faces 2 and 4 800 mm

Face 1	Number of bars	Bar diameter	Edge distances to centre of bars		
Layer			Face 4	Face 1	Face 2
1	4	12	65	65	65

Face 2	Number of bars	Bar diameter	Edge distances to centre of bars		
Layer			Face 1	Face 2	Face 3
1	5	12	140	65	140

Face 3	Number of bars	Bar diameter	Edge distances to centre of bars		
Layer			Face 2	Face 3	Face 4
1	4	12	65	65	65

Face 4	Number of bars	Bar diameter	Edge distances to centre of bars		
Layer			Face 3	Face 4	Face 1
1	5	12	140	65	140

Modular ratio mr=15

Plot of Section Details

Section details

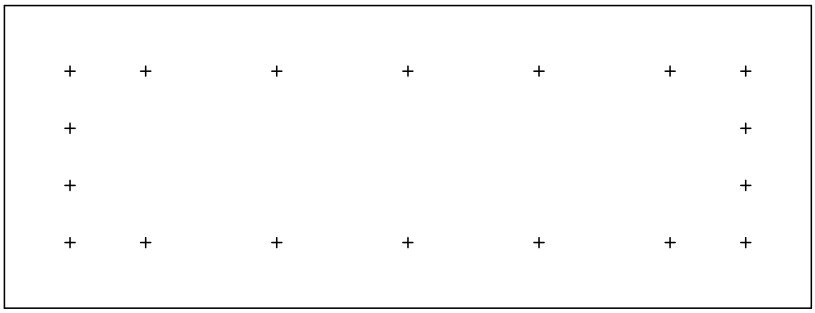

Loading Case 1

Axial Load P(1)=1000 kN
Axial load applied at centroid of stressed section.

Applied moments

About x axis Amx(1)=0 kNm
About y axis Amy(1)=0 kNm

All of section in compression

Centroid of stressed section X=150 Y=400

Design bending moments at centroid of stressed section

About x axis Dmx=Amx(z)=0 kNm
About y axis Dmy=Amy(z)=0 kNm

Concrete stresses

Corner	Co-ordinates x	Co-ordinates y	Stress (N/mm²)
1	0	0	3.7244
2	300	0	3.7244
3	300	800	3.7244
4	0	800	3.7244

Reinforcement bar stresses. Tension negative, Compression positive.

Compressive stress in all bars 55.866 N/mm²

Copyright 1986-2024 Fitzroy Systems Ltd.

Location: Fully cracked section. Axial load moves to centroid.

Elastic biaxial bending of a rectangular RC section

Units used in the calculations:

Input	Dimensions and bar diameters	mm
	Forces	kN
	Bending moments	kNm
Output	Dimensions and co-ordinates	mm
	Stresses	N/mm²

Sign Convention for loading
A positive axial load causes compression in the section.
A positive moment is clockwise about the x or y axes.

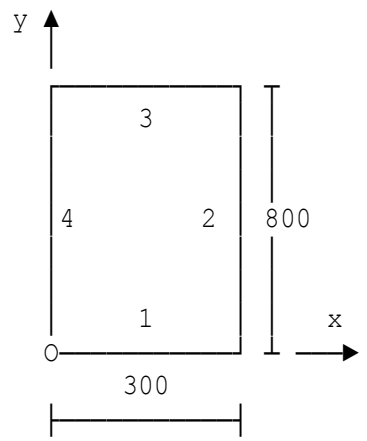

Face Numbers and Co-ordinate Axes

Length of Faces 1 and 3 300 mm
Length of Faces 2 and 4 800 mm

Face 1	Number of bars	Bar diameter	Edge distances to centre of bars		
Layer			Face 4	Face 1	Face 2
1	4	12	65	65	65

Face 2	Number of bars	Bar diameter	Edge distances to centre of bars		
Layer			Face 1	Face 2	Face 3
1	5	12	140	65	140

Face 3	Number of bars	Bar diameter	Edge distances to centre of bars		
Layer			Face 2	Face 3	Face 4
1	4	12	65	65	65

Face 4	Number of bars	Bar diameter	Edge distances to centre of bars		
Layer			Face 3	Face 4	Face 1
1	5	12	140	65	140

Modular ratio mr=15

Plot of Section Details

Section details

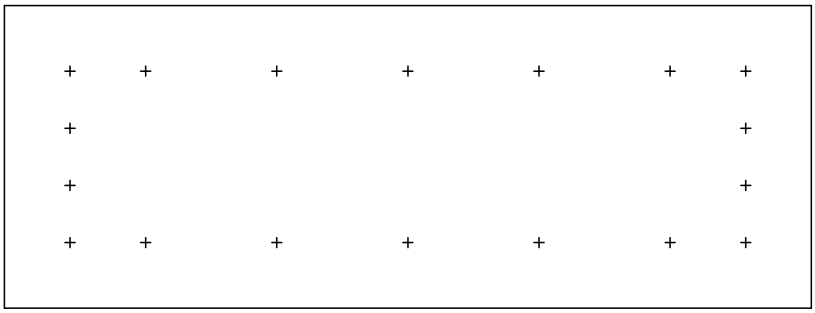

Loading Case 1

Axial Load P(1)=-500 kN
Axial load applied at centroid of stressed section.

Applied moments

About x axis Amx(1)=0 kNm
About y axis Amy(1)=0 kNm

All of section in tension

Centroid of stressed section X=150 Y=400

Design bending moments at centroid of stressed section

About x axis Dmx=Amx(z)=0 kNm
About y axis Dmy=Amy(z)=0 kNm

Reinforcement bar stresses. Tension negative, Compression positive.

Tensile stress in all bars -245.61 N/mm²

Location: Pier section at foundation

Elastic biaxial bending of a circular RC section

Units used in the calculations:

Input	Dimensions and bar diameters	mm
	Forces	kN
	Bending moments	kNm
Output	Dimensions and co-ordinates	mm
	Stresses	N/mm²

Sign Convention for loading

A positive axial load causes compression in the section.
A positive moment is clockwise about the x or y axes.

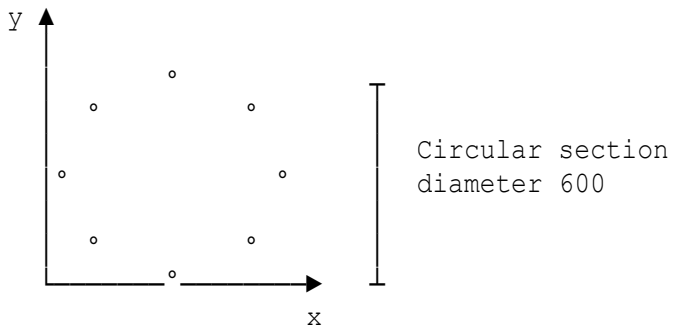

A reinforcement set is defined by the following parameters:

Number of bars. Diameter of bars. Edge distance to centre of bars. Anti-clockwise angle (Θ) measured in degrees from local axis y' to locate first bar in set. Subsequent bars (if any) are positioned in an anti-clockwise sense from the first bar at equal centres.

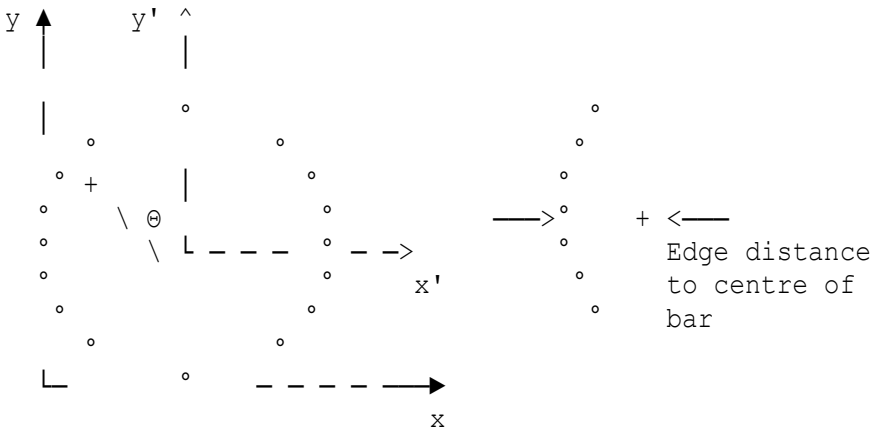

Copyright 1986-2024 Fitzroy Systems Ltd.

Set	Number of bars	Bar diameter	Edge distances to bar centres	Start angle
1	4	16	56	0
2	4	12	56	45

Modular ratio mr=15

Plot of Section Details

Section details

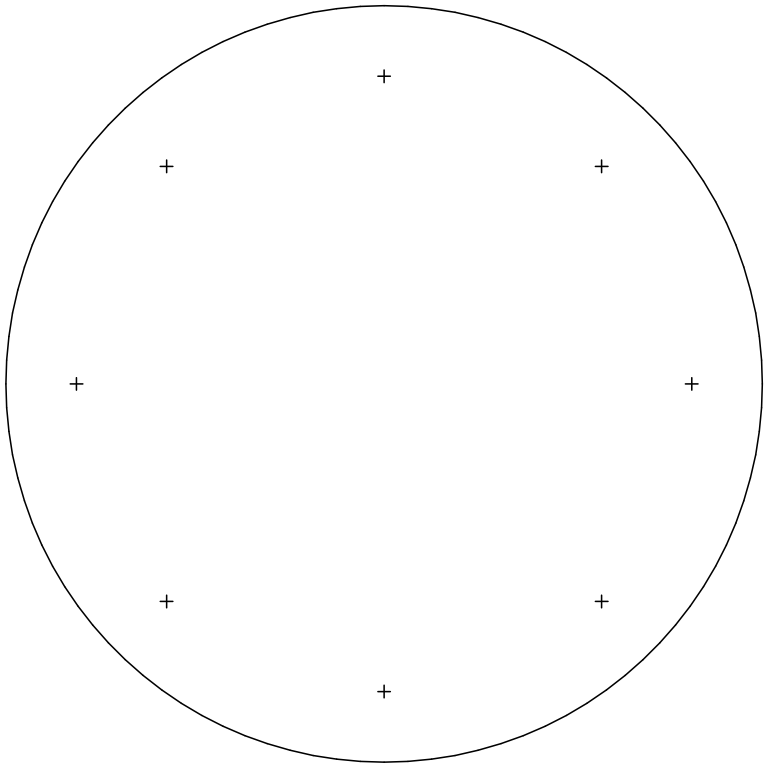

Loading Case 1

Axial Load	P(1)=1000 kN

Axial load fixed in position.

x co-ordinate	xp(1)=350 mm
y co-ordinate	yp(1)=400 mm

Applied moments

About x axis	Amx(1)=-50 kNm
About y axis	Amy(1)=75 kNm

Plot of Cracked Section

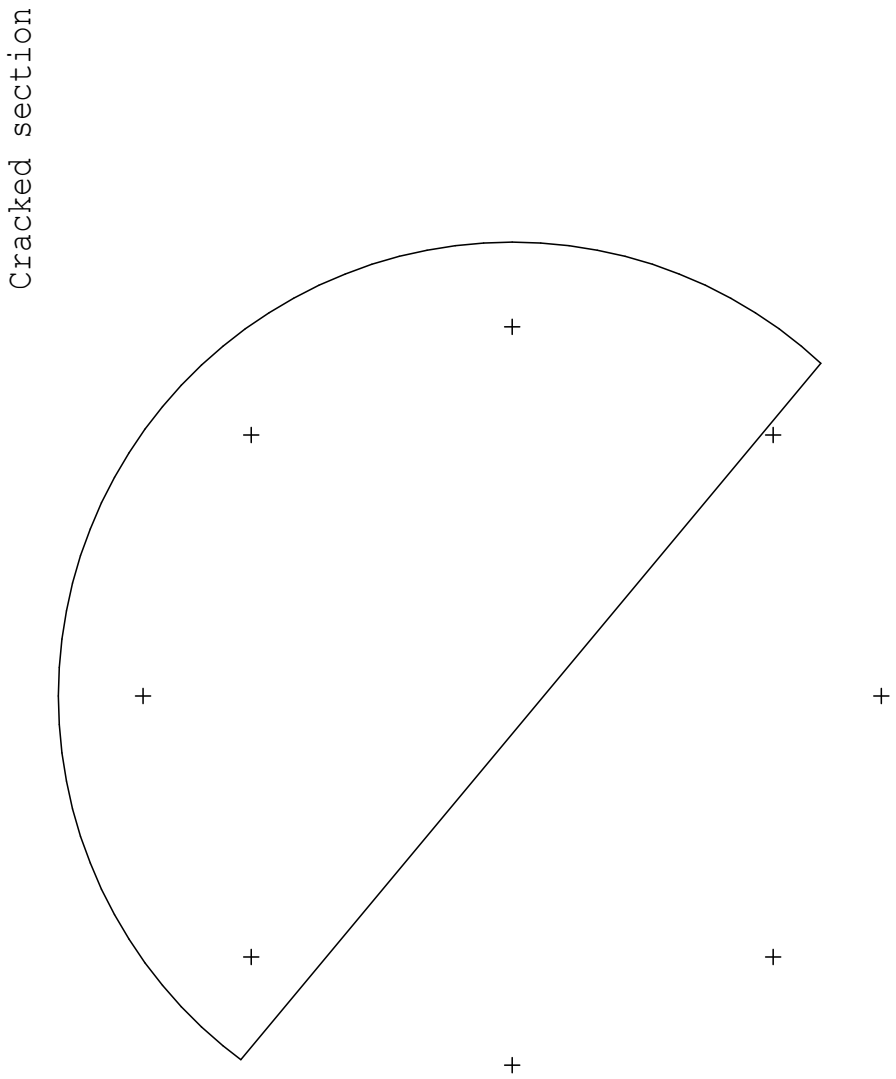

Section is cracked

Neutral axis line

x=59.681 y=479.41
x=519.87 y=95.977

Centroid of stressed section X=367.49 Y=380.83

Design bending moments at centroid of stressed section

About x axis Dmx=-P(z)*(yp(z)-Y)/1000+Amx(z)
=-69.167 kNm
About y axis Dmy=P(z)*(xp(z)-X)/1000+Amy(z)
=57.505 kNm

Maximum concrete stress

Co-ordinates x (mm)	Co-ordinates y (mm)	Stress (N/mm²)
491.23	531.15	15.406

Reinforcement bar stresses. Tension negative, Compression positive.

Bar Set	Bar No.	Co-ordinates x	Co-ordinates y	Diameter	Stress
1	1	300	544	16	148.79
1	2	56	300	16	-102.52
1	3	300	56	16	-125.39
1	4	544	300	16	125.92
2	1	127.47	472.53	12	27.868
2	2	127.47	127.47	12	-166
2	3	472.53	127.47	12	-4.4685
2	4	472.53	472.53	12	189.4

Number of iterations 7

Location: Uncracked section

Elastic biaxial bending of a circular RC section

Units used in the calculations:

Input	Dimensions and bar diameters	mm
	Forces	kN
	Bending moments	kNm
Output	Dimensions and co-ordinates	mm
	Stresses	N/mm²

Sign Convention for loading

A positive axial load causes compression in the section.
A positive moment is clockwise about the x or y axes.

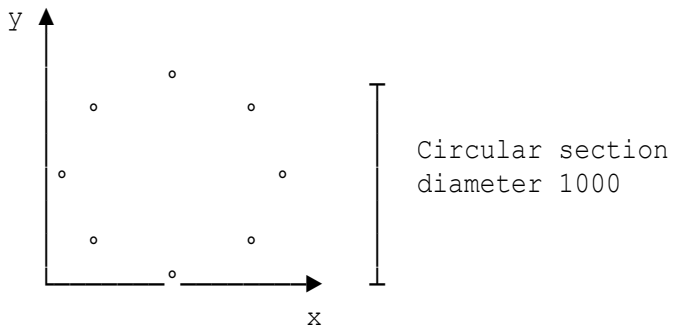

A reinforcement set is defined by the following parameters:

Number of bars. Diameter of bars. Edge distance to centre of bars. Anti-clockwise angle (Θ) measured in degrees from local axis y' to locate first bar in set. Subsequent bars (if any) are positioned in an anti-clockwise sense from the first bar at equal centres.

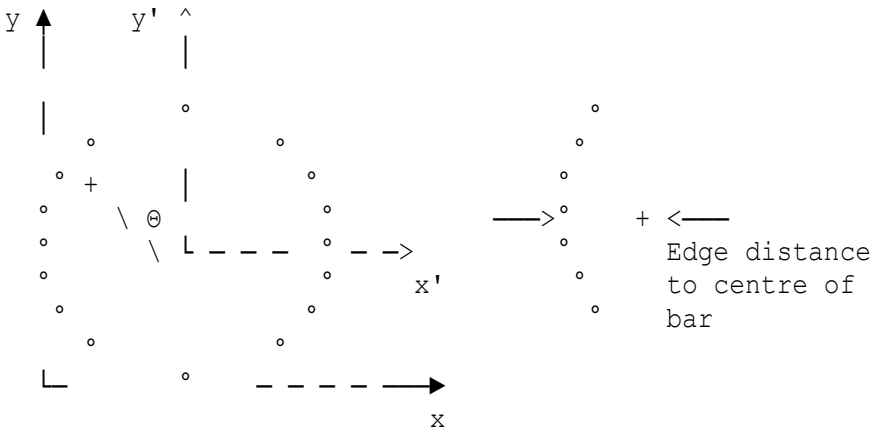

Copyright 1986-2024 Fitzroy Systems Ltd.

Set	Number of bars	Bar diameter	Edge distances to bar centres	Start angle
1	8	20	70	0
2	4	16	100	45

Modular ratio mr=15

Plot of Section Details

Section details

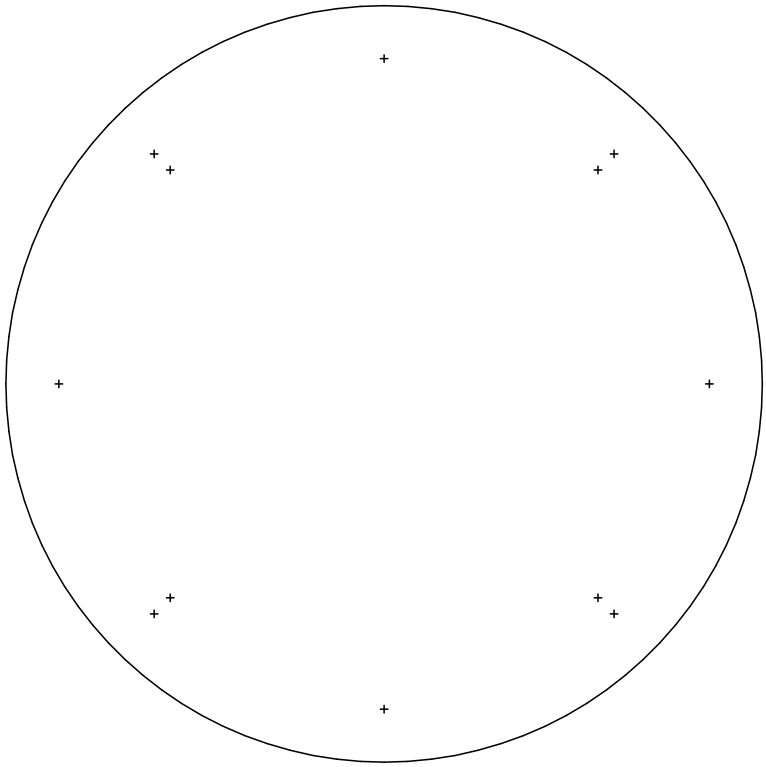

Loading Case 1

Axial Load P(1)=3000 kN
Axial load fixed in position.

x co-ordinate xp(1)=350 mm
y co-ordinate yp(1)=400 mm

Applied moments

About x axis Amx(1)=-100 kNm
About y axis Amy(1)=150 kNm

All of section in compression

Centroid of stressed section X=500 Y=500

Design bending moments at centroid of stressed section

About x axis Dmx=-P(z)*(yp(z)-Y)/1000+Amx(z)
=200 kNm
About y axis Dmy=P(z)*(xp(z)-X)/1000+Amy(z)
=-300 kNm

Concrete stresses
Maximum and minimum compressive stresses in concrete

	Co-ordinates x	y	Stress
	922.16	767.91	0.21944
Maximum			
	77.836	232.09	6.9979

Reinforcement bar stresses. Tension negative, Compression positive.

Bar Set	Bar No.	Co-ordinates x	y	Diameter	Stress
1	1	500	930	20	29.872
1	2	195.94	804.06	20	62.707
1	3	70	500	20	90.518
1	4	195.94	195.94	20	97.013
1	5	500	70	20	78.389
1	6	804.06	195.94	20	45.554
1	7	930	500	20	17.743
1	8	804.06	804.06	20	11.247
2	1	217.16	782.84	16	62.109
2	2	217.16	217.16	16	94.022
2	3	782.84	217.16	16	46.152
2	4	782.84	782.84	16	14.239

Location: Fully cracked section

Elastic biaxial bending of a circular RC section

Units used in the calculations:

Input	Dimensions and bar diameters	mm
	Forces	kN
	Bending moments	kNm
Output	Dimensions and co-ordinates	mm
	Stresses	N/mm²

Sign Convention for loading

A positive axial load causes compression in the section.
A positive moment is clockwise about the x or y axes.

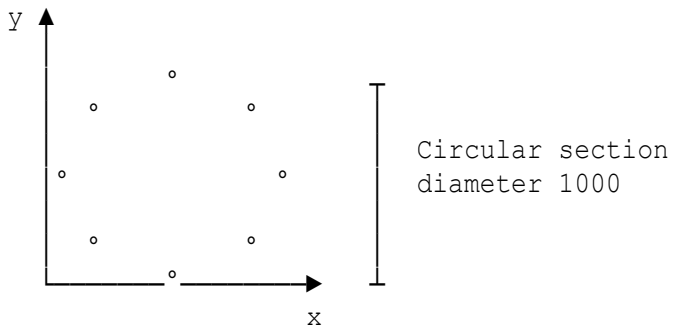

A reinforcement set is defined by the following parameters:

Number of bars. Diameter of bars. Edge distance to centre of bars. Anti-clockwise angle (Θ) measured in degrees from local axis y' to locate first bar in set. Subsequent bars (if any) are positioned in an anti-clockwise sense from the first bar at equal centres.

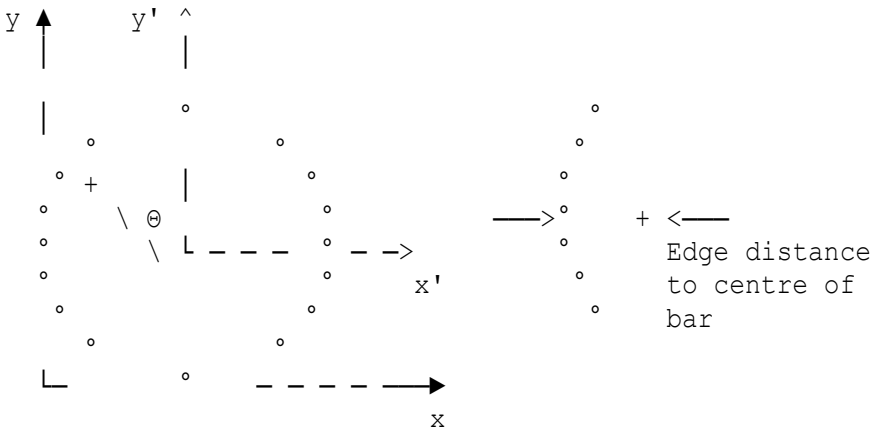

Set	Number of bars	Bar diameter	Edge distances to bar centres	Start angle
1	8	20	70	0
2	4	16	100	45

Modular ratio mr=15

Plot of Section Details

Section details

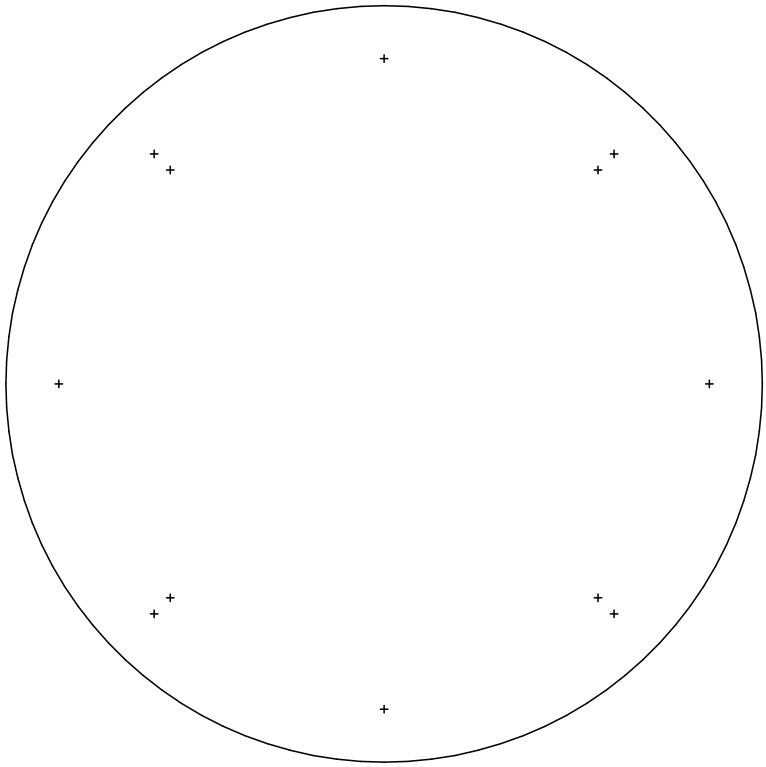

Loading Case 1

Axial Load P(1)=-3000 kN
Axial load fixed in position.

x co-ordinate xp(1)=500 mm
y co-ordinate yp(1)=500 mm

Applied moments

About x axis Amx(1)=-100 kNm
About y axis Amy(1)=150 kNm

All of section in tension

Centroid of stressed section X=500 Y=500

Design bending moments at centroid of stressed section

About x axis Dmx=-P(z)*(yp(z)-Y)/1000+Amx(z)
=-100 kNm
About y axis Dmy=P(z)*(xp(z)-X)/1000+Amy(z)=150 kNm

Reinforcement bar stresses. Tension negative, Compression positive.

Bar Set	Bar No.	Co-ordinates x	y	Diameter	Stress
1	1	500	930	20	-759.39
1	2	195.94	804.06	20	-955.52
1	3	70	500	20	-1121.6
1	4	195.94	195.94	20	-1160.4
1	5	500	70	20	-1049.2
1	6	804.06	195.94	20	-853.06
1	7	930	500	20	-686.95
1	8	804.06	804.06	20	-648.15
2	1	217.16	782.84	16	-951.94
2	2	217.16	217.16	16	-1142.6
2	3	782.84	217.16	16	-856.64
2	4	782.84	782.84	16	-666.02

Location: Cracked section. Axial load moves to centroid.

Elastic biaxial bending of a circular RC section

Units used in the calculations:

Input	Dimensions and bar diameters	mm
	Forces	kN
	Bending moments	kNm
Output	Dimensions and co-ordinates	mm
	Stresses	N/mm²

Sign Convention for loading

A positive axial load causes compression in the section.
A positive moment is clockwise about the x or y axes.

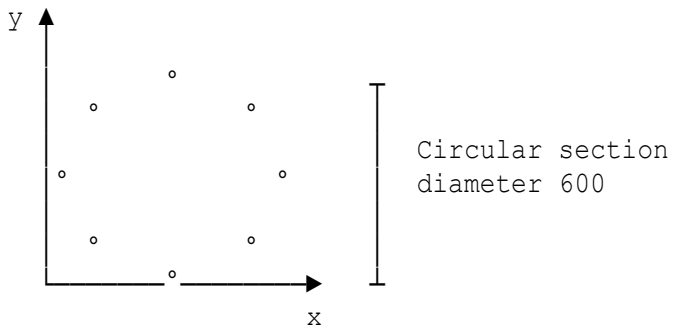

A reinforcement set is defined by the following parameters:

Number of bars. Diameter of bars. Edge distance to centre of bars. Anti-clockwise angle (Θ) measured in degrees from local axis y' to locate first bar in set. Subsequent bars (if any) are positioned in an anti-clockwise sense from the first bar at equal centres.

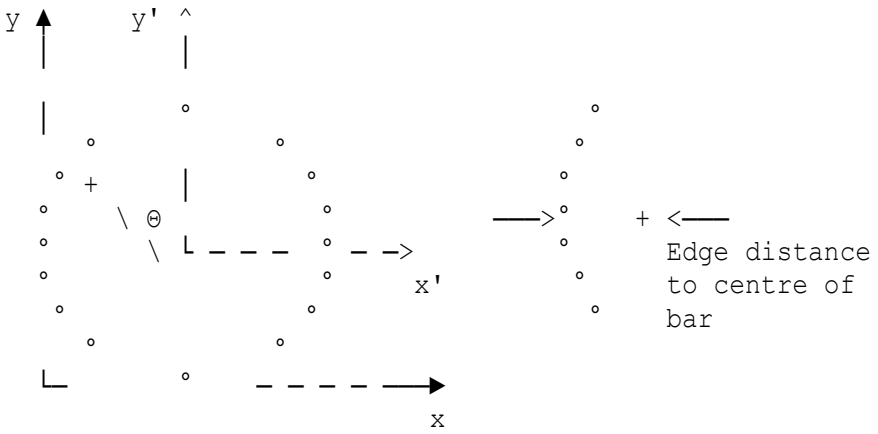

Copyright 1986-2024 Fitzroy Systems Ltd.

Set	Number of bars	Bar diameter	Edge distances to bar centres	Start angle
1	4	16	56	0
2	4	12	56	45

Modular ratio mr=15

Plot of Section Details

Section details

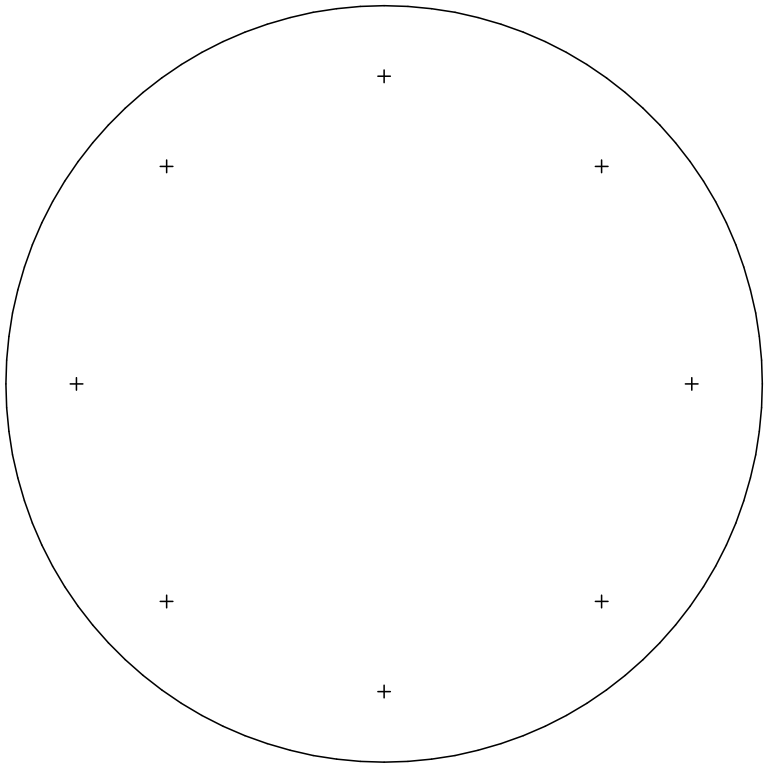

Copyright 1986-2024 Fitzroy Systems Ltd.

Loading Case 1

Axial Load P(1)=1000 kN
Axial load applied at centroid of stressed section.

Applied moments

About x axis Amx(1)=-50 kNm
About y axis Amy(1)=75 kNm

Plot of Cracked Section

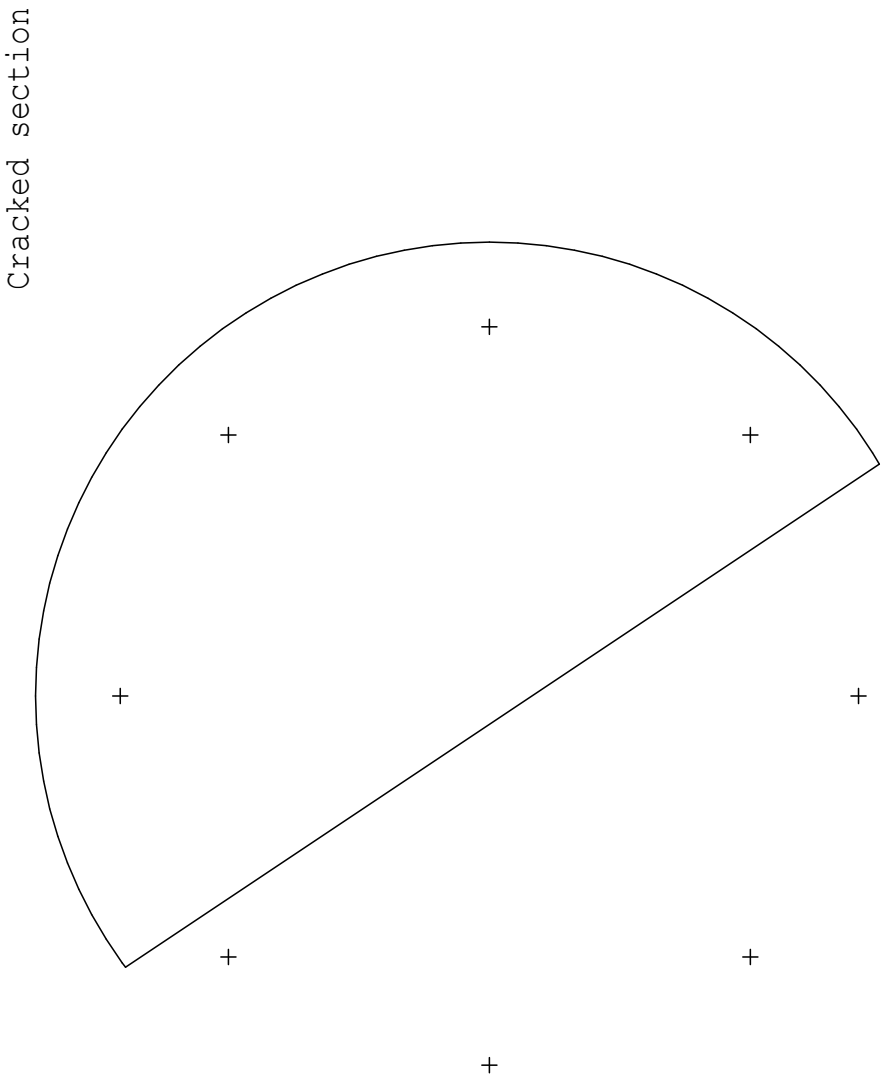

Section is cracked

Neutral axis line

x=120.82 y=540.5
x=453.29 y=42.292

Centroid of stressed section X=387.7 Y=358.58

Design bending moments at centroid of stressed section

About x axis Dmx=Amx(z)=-50 kNm
About y axis Dmy=Amy(z)=75 kNm

Maximum concrete stress

Co-ordinates x (mm)	Co-ordinates y (mm)	Stress (N/mm²)
553.3	460.75	15.439

Reinforcement bar stresses. Tension negative, Compression positive.

Bar Set	Bar No.	Co-ordinates x	Co-ordinates y	Diameter	Stress
1	1	300	544	16	110.84
1	2	56	300	16	-137.58
1	3	300	56	16	-88.016
1	4	544	300	16	160.4
2	1	127.47	472.53	12	-23.637
2	2	127.47	127.47	12	-164.25
2	3	472.53	127.47	12	46.457
2	4	472.53	472.53	12	187.07

Number of iterations 21

Location: Uncracked section. Axial load moves to centroid.

Elastic biaxial bending of a circular RC section

Units used in the calculations:

Input	Dimensions and bar diameters	mm
	Forces	kN
	Bending moments	kNm
Output	Dimensions and co-ordinates	mm
	Stresses	N/mm²

Sign Convention for loading

A positive axial load causes compression in the section.
A positive moment is clockwise about the x or y axes.

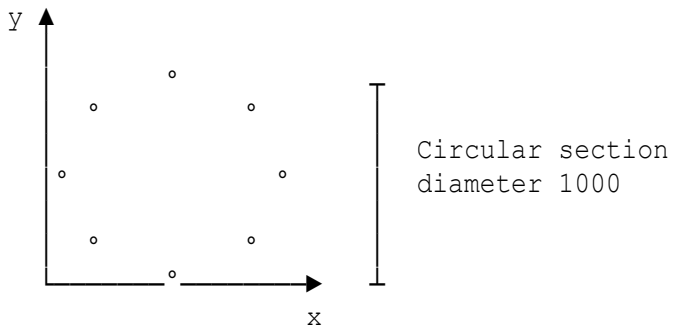

A reinforcement set is defined by the following parameters:

Number of bars. Diameter of bars. Edge distance to centre of bars. Anti-clockwise angle (Θ) measured in degrees from local axis y' to locate first bar in set. Subsequent bars (if any) are positioned in an anti-clockwise sense from the first bar at equal centres.

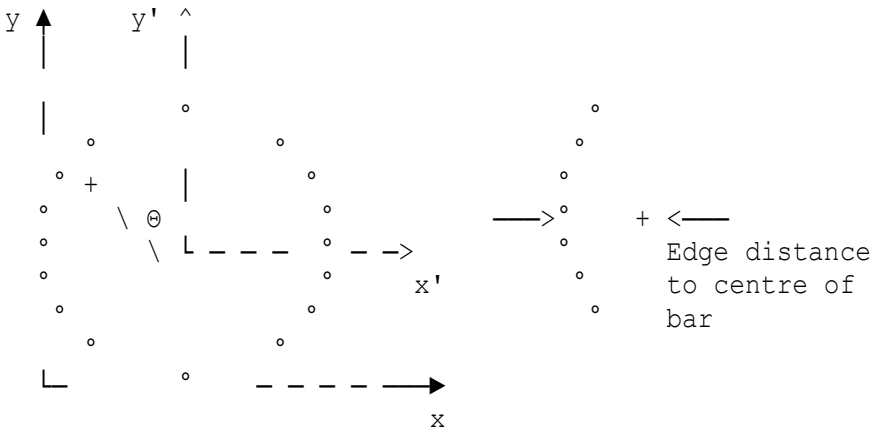

Copyright 1986-2024 Fitzroy Systems Ltd.

Set	Number of bars	Bar diameter	Edge distances to bar centres	Start angle
1	8	20	70	0
2	4	16	100	45

Modular ratio mr=15

Plot of Section Details

Section details

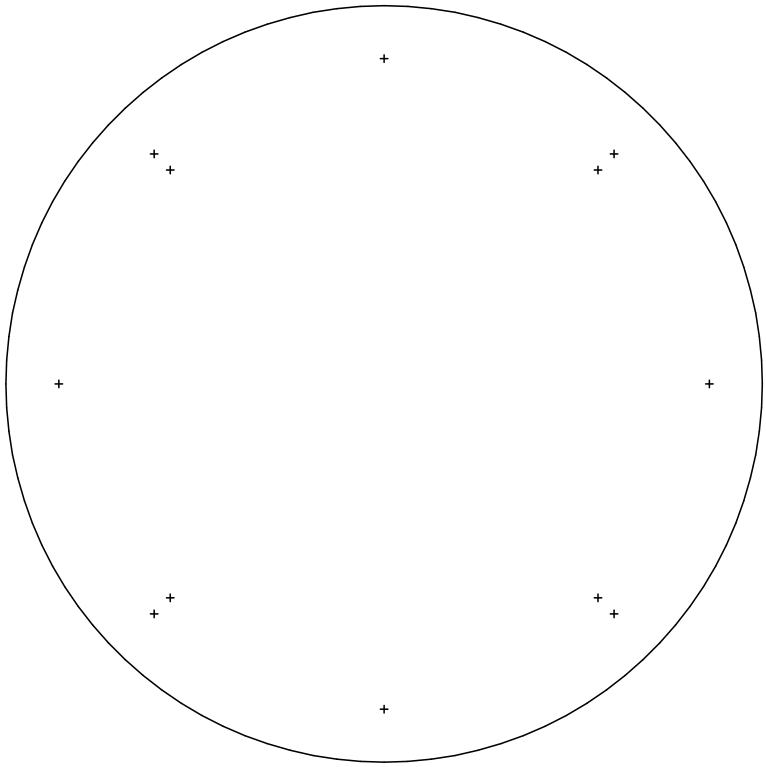

Loading Case 1

Axial Load P(1)=3000 kN
Axial load applied at centroid of stressed section.

Applied moments

About x axis Amx(1)=-100 kNm
About y axis Amy(1)=150 kNm

All of section in compression

Centroid of stressed section X=500 Y=500

Design bending moments at centroid of stressed section

About x axis Dmx=Amx(z)=-100 kNm
About y axis Dmy=Amy(z)=150 kNm

Concrete stresses
Maximum and minimum compressive stresses in concrete

	Co-ordinates x	y	Stress
	77.836	232.09	1.9141
Maximum	922.16	767.91	5.3033

Reinforcement bar stresses. Tension negative, Compression positive.

Bar Set	Bar No.	Co-ordinates x	y	Diameter	Stress
1	1	500	930	20	66.26
1	2	195.94	804.06	20	49.842
1	3	70	500	20	35.937
1	4	195.94	195.94	20	32.689
1	5	500	70	20	42.001
1	6	804.06	195.94	20	58.419
1	7	930	500	20	72.324
1	8	804.06	804.06	20	75.572
2	1	217.16	782.84	16	50.141
2	2	217.16	217.16	16	34.185
2	3	782.84	217.16	16	58.119
2	4	782.84	782.84	16	74.076

Location: Fully cracked section. Axial load moves to centroid.

Elastic biaxial bending of a circular RC section

Units used in the calculations:

Input	Dimensions and bar diameters	mm
	Forces	kN
	Bending moments	kNm
Output	Dimensions and co-ordinates	mm
	Stresses	N/mm²

Sign Convention for loading

A positive axial load causes compression in the section.
A positive moment is clockwise about the x or y axes.

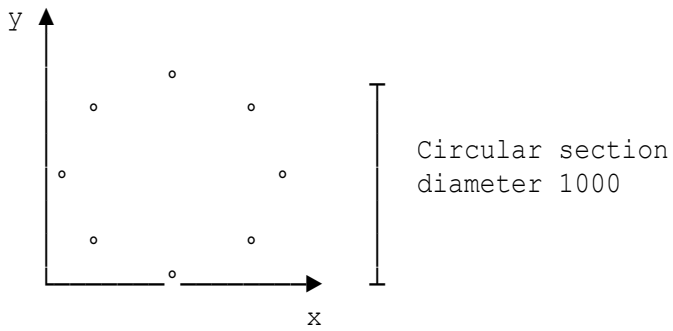

A reinforcement set is defined by the following parameters:

Number of bars. Diameter of bars. Edge distance to centre of bars. Anti-clockwise angle (Θ) measured in degrees from local axis y' to locate first bar in set. Subsequent bars (if any) are positioned in an anti-clockwise sense from the first bar at equal centres.

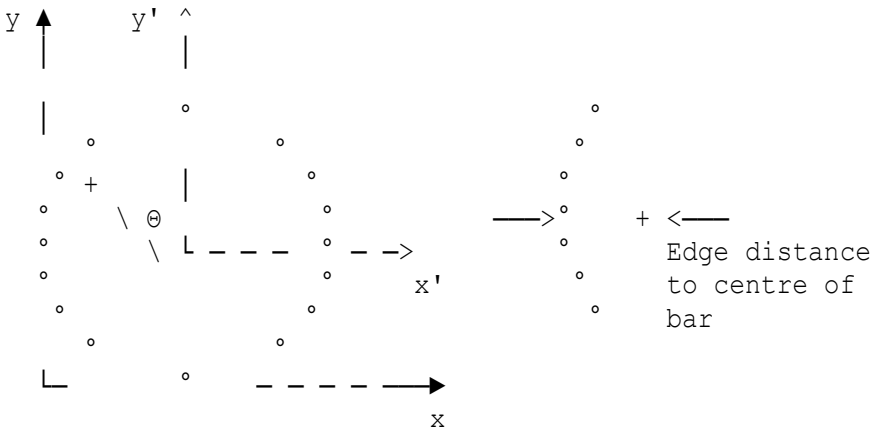

Set	Number of bars	Bar diameter	Edge distances to bar centres	Start angle
1	8	20	70	0
2	4	16	100	45

Modular ratio mr=15

Plot of Section Details

Section details

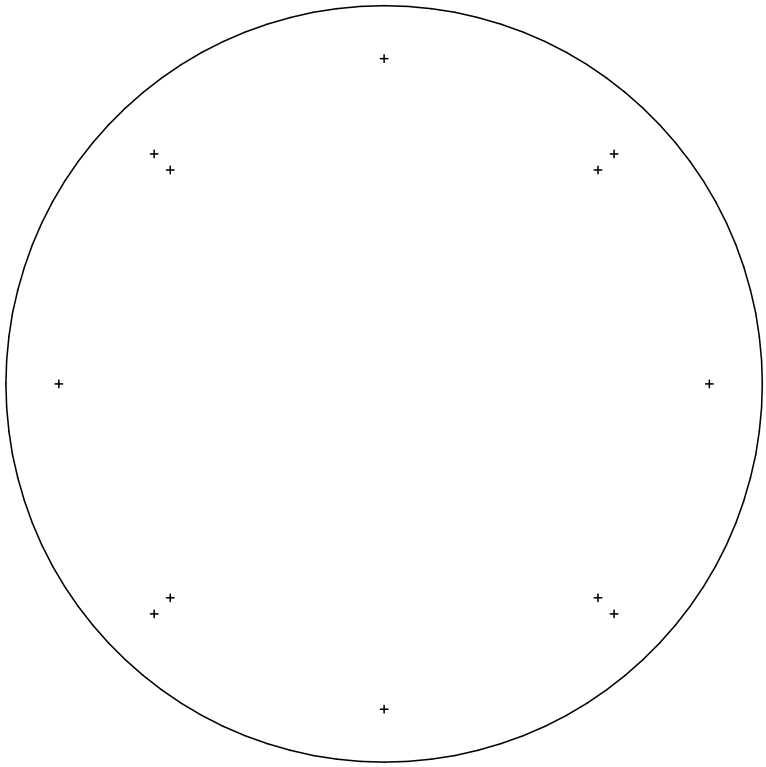

Loading Case 1

Axial Load P(1)=-3000 kN
Axial load applied at centroid of stressed section.

Applied moments

About x axis Amx(1)=-100 kNm
About y axis Amy(1)=150 kNm

All of section in tension

Centroid of stressed section X=500 Y=500

Design bending moments at centroid of stressed section

About x axis Dmx=Amx(z)=-100 kNm
About y axis Dmy=Amy(z)=150 kNm

Reinforcement bar stresses. Tension negative, Compression positive.

Bar Set	Bar No.	Co-ordinates x	y	Diameter	Stress
1	1	500	930	20	-759.39
1	2	195.94	804.06	20	-955.52
1	3	70	500	20	-1121.6
1	4	195.94	195.94	20	-1160.4
1	5	500	70	20	-1049.2
1	6	804.06	195.94	20	-853.06
1	7	930	500	20	-686.95
1	8	804.06	804.06	20	-648.15
2	1	217.16	782.84	16	-951.94
2	2	217.16	217.16	16	-1142.6
2	3	782.84	217.16	16	-856.64
2	4	782.84	782.84	16	-666.02

Copyright 1986-2024 Fitzroy Systems Ltd.

Location: Pier section at foundation

Elastic biaxial bending of a user defined reinforced concrete section

Units used in the calculations:

Input	Dimensions and bar diameters	mm
	Forces	kN
	Bending moments	kNm
Output	Dimensions and co-ordinates	mm
	Stresses	N/mm²

Sign Convention for loading
A positive axial load causes compression in the section.
A positive moment is clockwise about the x or y axes.

Section details

Number of items in section r=2

Item 1 is a polygon

Item weighting iw(1)=1
Number of corners in item n(1)=4

Item co-ordinates

Corner 1	x=	ox(1)=0
	y=	oy(1)=0
Corner 2	x=	ox(2)=1000
	y=	oy(2)=0
Corner 3	x=	ox(3)=1000
	y=	oy(3)=500
Corner 4	x=	ox(4)=0
	y=	oy(4)=500

Plot of Item Details

Item details

Item 2 is a polygon

Item weighting		iw(2)=-1
Number of corners in item		n(2)=4

Item co-ordinates

Corner 1	x=	ox(51)=100
	y=	oy(51)=100
Corner 2	x=	ox(52)=900
	y=	oy(52)=100
Corner 3	x=	ox(53)=900
	y=	oy(53)=400
Corner 4	x=	ox(54)=100
	y=	oy(54)=400

Plot of Item Details

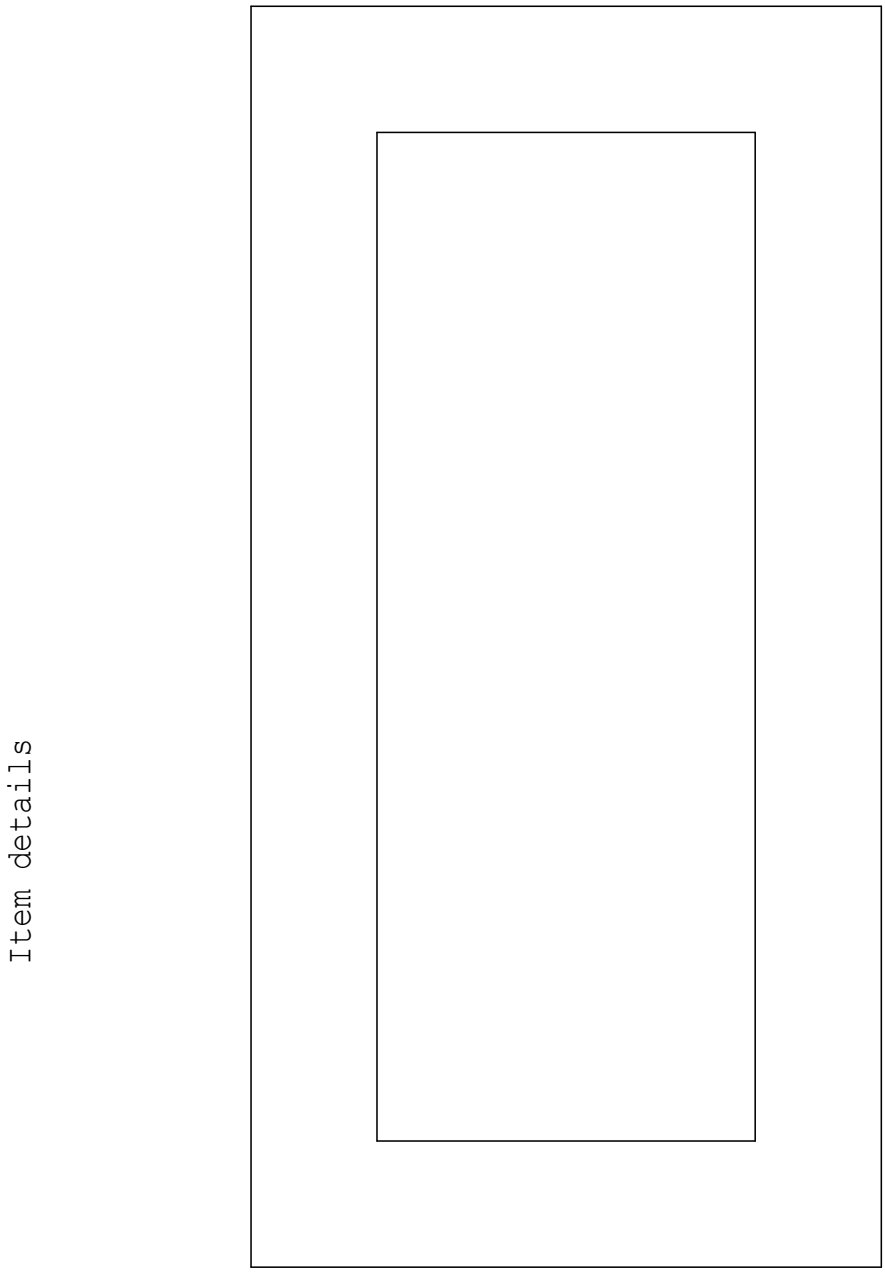

Bar reinforcement details

No of sets of bars	nos=6
Bar set 1	
Number of bars	na(1)=4
Co-ordinates of first bar	xf(1)=60
	yf(1)=60
Co-ordinates of last bar	xl(1)=940
	yl(1)=60
Diameter of bars	da(1)=16
Bar set 2	
Number of bars	na(2)=3
Co-ordinates of first bar	xf(2)=206
	yf(2)=60
Co-ordinates of last bar	xl(2)=794
	yl(2)=60
Diameter of bars	da(2)=12
Bar set 3	
Number of bars	na(3)=3
Co-ordinates of first bar	xf(3)=940
	yf(3)=155
Co-ordinates of last bar	xl(3)=940
	yl(3)=345
Diameter of bars	da(3)=12
Bar set 4	
Number of bars	na(4)=4
Co-ordinates of first bar	xf(4)=60
	yf(4)=440
Co-ordinates of last bar	xl(4)=940
	yl(4)=440
Diameter of bars	da(4)=16
Bar set 5	
Number of bars	na(5)=3
Co-ordinates of first bar	xf(5)=206
	yf(5)=440
Co-ordinates of last bar	xl(5)=794
	yl(5)=440
Diameter of bars	da(5)=12
Bar set 6	
Number of bars	na(6)=3
Co-ordinates of first bar	xf(6)=60
	yf(6)=155

Co-ordinates of last bar	xl(6)=60
	yl(6)=345
Diameter of bars	da(6)=12
Modular ratio	mr=15

Plot of Item Details

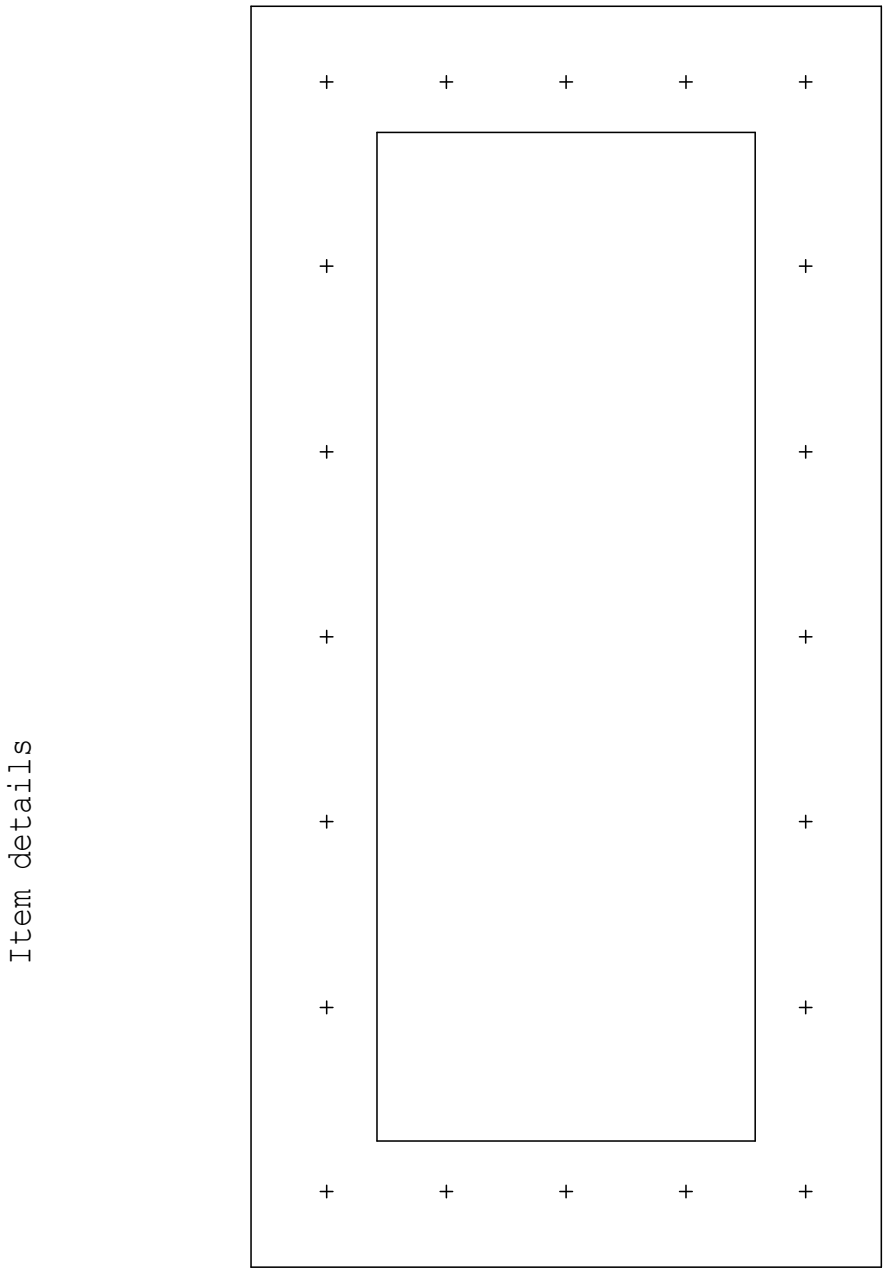

Plot of Section Details

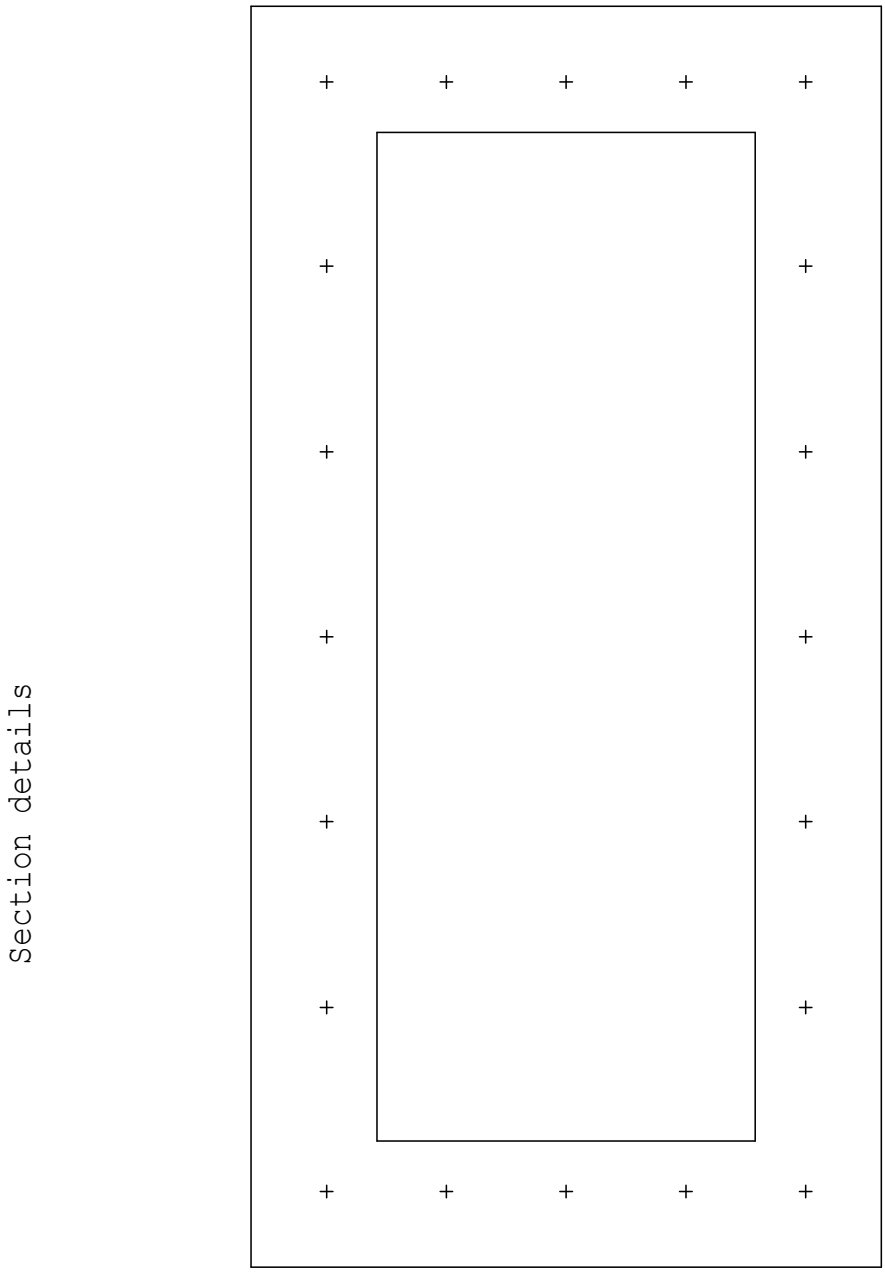

Loading Case 1

Axial Load	P(1)=1000 kN
Axial load fixed in position.	
x co-ordinate	xp(1)=600 mm
y co-ordinate	yp(1)=300 mm
Applied moments	
About x axis	Amx(1)=-200 kNm
About y axis	Amy(1)=300 kNm

Plot of Cracked Section

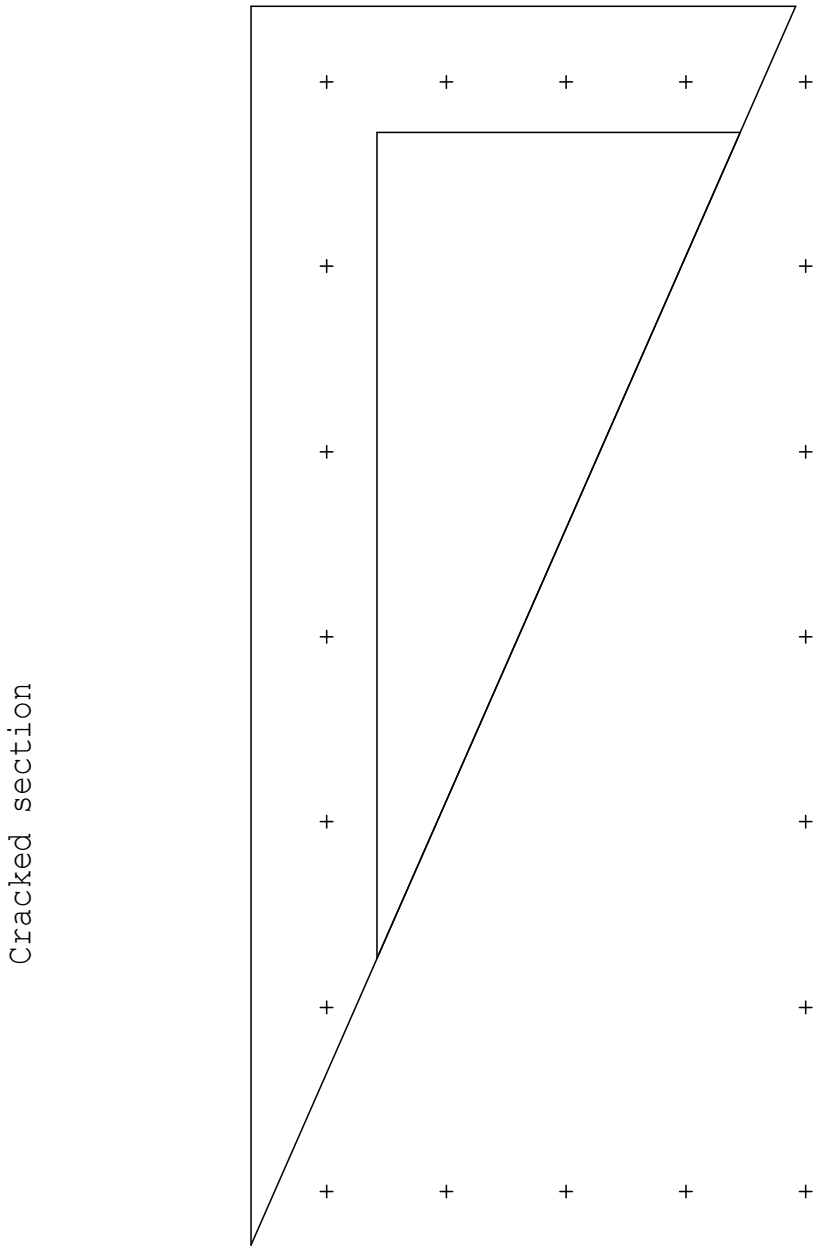

Section is cracked

Neutral axis line

Item 1

x=1000 y=67.936
x=17.554 y=500

Item 2

x=900 y=111.91
x=244.94 y=400

Centroid of stressed section X=619.43 Y=356.91

Design bending moments at centroid of stressed section

About x axis Dmx=-P(z)*(yp(z)-Y)/1000+Amx(z)
=-143.09 kNm
About y axis Dmy=P(z)*(xp(z)-X)/1000+Amy(z)
=280.57 kNm
Maximum compressive stresses in concrete

	Co-ordinates x	Co-ordinates y	Stress
Item 1			
	1000	500	22.057
Item 2			
	900	400	14.707

Reinforcement bar stresses. Tension negative, Compression positive.

Bar No.	Bar Set	Co-ordinates x	Co-ordinates y	Diameter	Stress
1	1	60	60	16	-322.64
2	1	353.33	60	16	-223.86
3	1	646.67	60	16	-125.07
4	1	940	60	16	-26.284
5	2	206	60	12	-273.48
6	2	500	60	12	-174.46
7	2	794	60	12	-75.453
8	3	940	155	12	46.464
9	3	940	250	12	119.21
10	3	940	345	12	191.96
11	4	60	440	16	-31.652
12	4	353.33	440	16	67.135
13	4	646.67	440	16	165.92
14	4	940	440	16	264.71
15	5	206	440	12	17.517
16	5	500	440	12	116.53
17	5	794	440	12	215.54
18	6	60	155	12	-249.9
19	6	60	250	12	-177.15
20	6	60	345	12	-104.4

Number of iterations 7

Copyright 1986-2024 Fitzroy Systems Ltd.

Location: Uncracked section

Elastic biaxial bending of a user defined reinforced concrete section

Units used in the calculations:

Input	Dimensions and bar diameters	mm
	Forces	kN
	Bending moments	kNm
Output	Dimensions and co-ordinates	mm
	Stresses	N/mm²

Sign Convention for loading
A positive axial load causes compression in the section.
A positive moment is clockwise about the x or y axes.

Section details

Number of items in section r=2

Item 1 is a polygon

Item weighting iw(1)=1
Number of corners in item n(1)=4

Item co-ordinates

Corner 1	x=	ox(1)=0
	y=	oy(1)=0
Corner 2	x=	ox(2)=1000
	y=	oy(2)=0
Corner 3	x=	ox(3)=1000
	y=	oy(3)=500
Corner 4	x=	ox(4)=0
	y=	oy(4)=500

Plot of Item Details

Item details

Item 2 is a polygon

Item weighting		iw(2)=-1
Number of corners in item		n(2)=4

Item co-ordinates

Corner 1	x=	ox(51)=100
	y=	oy(51)=100
Corner 2	x=	ox(52)=900
	y=	oy(52)=100
Corner 3	x=	ox(53)=900
	y=	oy(53)=400
Corner 4	x=	ox(54)=100
	y=	oy(54)=400

Plot of Item Details

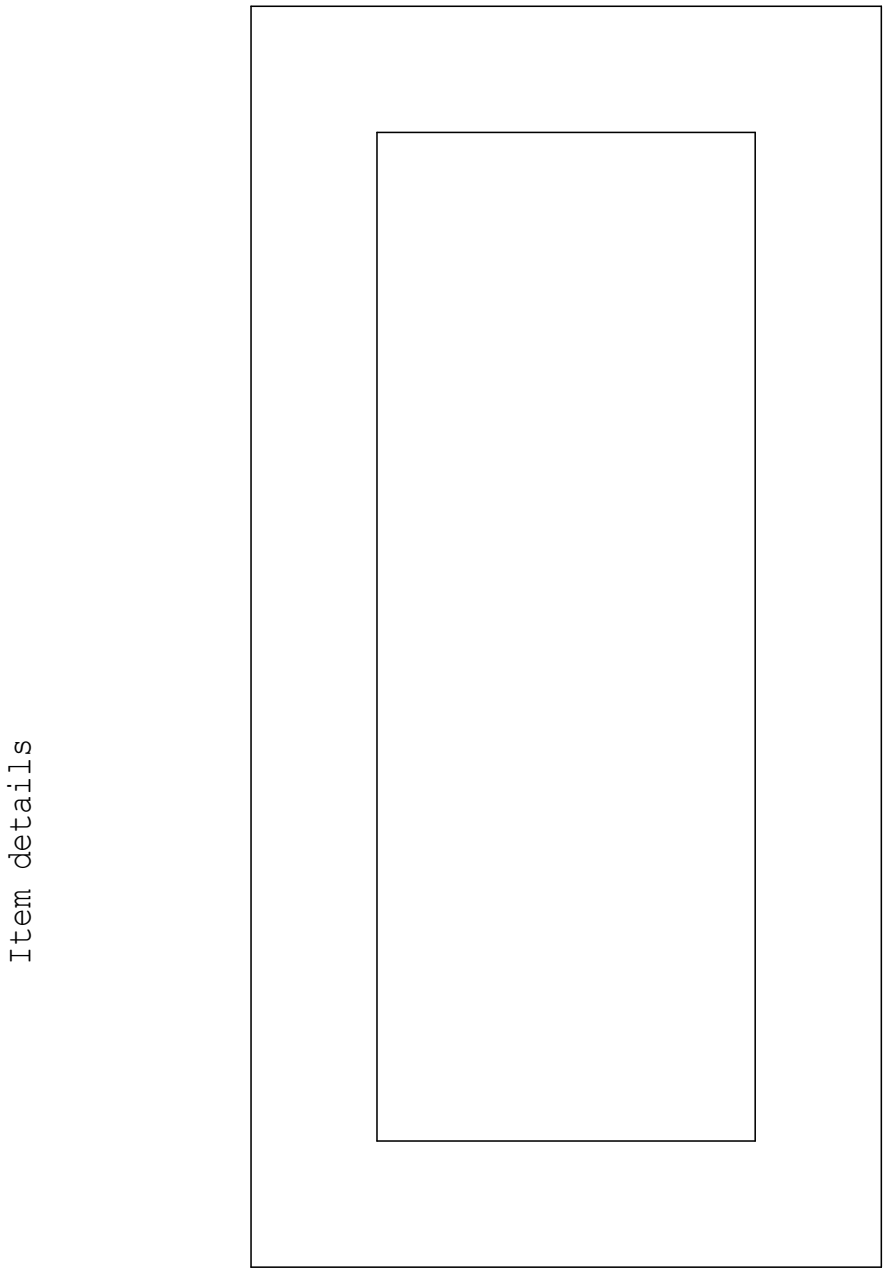

Bar reinforcement details

No of sets of bars	nos=6
Bar set 1	
Number of bars	na(1)=4
Co-ordinates of first bar	xf(1)=60
	yf(1)=60
Co-ordinates of last bar	xl(1)=940
	yl(1)=60
Diameter of bars	da(1)=16
Bar set 2	
Number of bars	na(2)=3
Co-ordinates of first bar	xf(2)=206
	yf(2)=60
Co-ordinates of last bar	xl(2)=794
	yl(2)=60
Diameter of bars	da(2)=12
Bar set 3	
Number of bars	na(3)=3
Co-ordinates of first bar	xf(3)=940
	yf(3)=155
Co-ordinates of last bar	xl(3)=940
	yl(3)=345
Diameter of bars	da(3)=12
Bar set 4	
Number of bars	na(4)=4
Co-ordinates of first bar	xf(4)=60
	yf(4)=440
Co-ordinates of last bar	xl(4)=940
	yl(4)=440
Diameter of bars	da(4)=16
Bar set 5	
Number of bars	na(5)=3
Co-ordinates of first bar	xf(5)=206
	yf(5)=440
Co-ordinates of last bar	xl(5)=794
	yl(5)=440
Diameter of bars	da(5)=12
Bar set 6	
Number of bars	na(6)=3
Co-ordinates of first bar	xf(6)=60
	yf(6)=155

Co-ordinates of last bar	xl(6)=60
	yl(6)=345
Diameter of bars	da(6)=12
Modular ratio	mr=15

Plot of Item Details

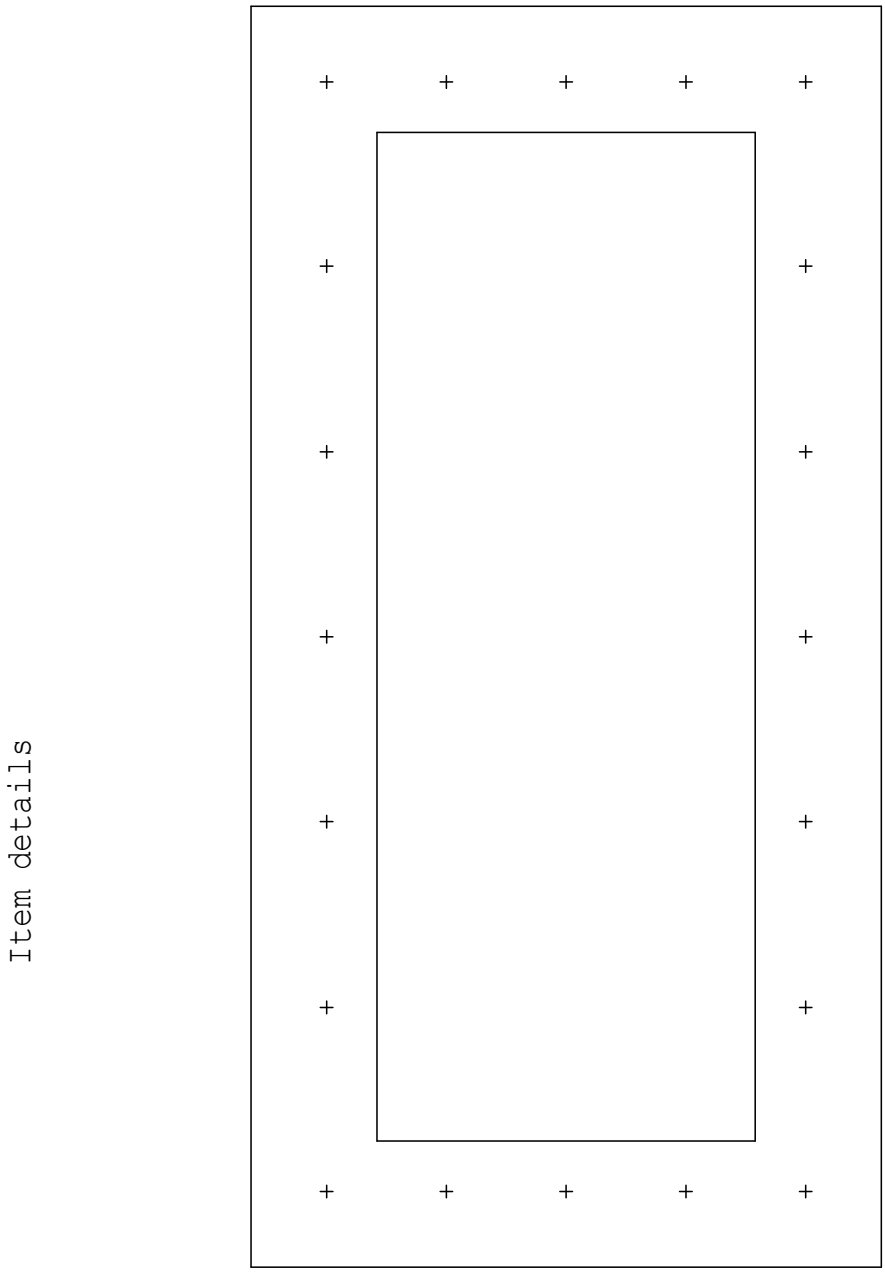

Plot of Section Details

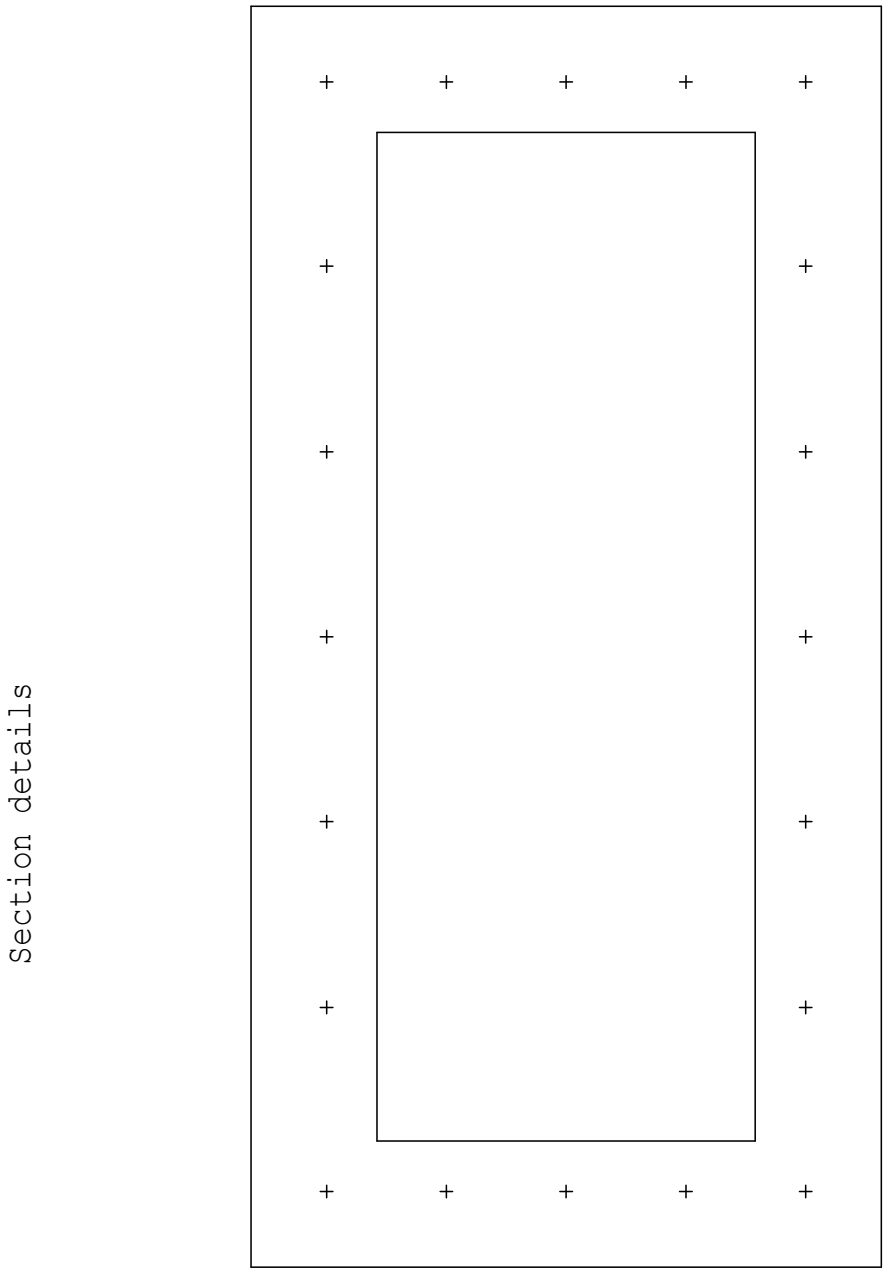

Loading Case 1

Axial Load P(1)=1000 kN
Axial load fixed in position.

x co-ordinate xp(1)=400 mm
y co-ordinate yp(1)=300 mm

Applied moments

About x axis Amx(1)=0 kNm
About y axis Amy(1)=0 kNm

All of section in compression

Centroid of stressed section X=500 Y=250

Design bending moments at centroid of stressed section

About x axis Dmx=-P(z)*(yp(z)-Y)/1000+Amx(z)
=-50 kNm
About y axis Dmy=P(z)*(xp(z)-X)/1000+Amy(z)
=-100 kNm

Concrete stresses

Maximum and minimum compressive stresses in concrete

	Co-ordinates x	Co-ordinates y	Stress
Item 1			
	1000	0	0.56021
Maximum			
	0	500	6.0729
Item 2			
	900	100	1.3658
Maximum			
	100	400	5.2673

Maximum and minimum reinforcement bar stresses.
Tension negative, Compression positive.

Bar No.	Bar Set	Co-ordinates x	Co-ordinates y	Diameter	Stress
Minimum					
4	1	940	60	16	15.653
Maximum					
11	4	60	440	16	83.843

Copyright 1986-2024 Fitzroy Systems Ltd.

Location: Fully cracked section

Elastic biaxial bending of a user defined reinforced concrete section

Units used in the calculations:

Input	Dimensions and bar diameters	mm
	Forces	kN
	Bending moments	kNm
Output	Dimensions and co-ordinates	mm
	Stresses	N/mm²

Sign Convention for loading
A positive axial load causes compression in the section.
A positive moment is clockwise about the x or y axes.

Section details

Number of items in section r=2

Item 1 is a polygon

Item weighting iw(1)=1
Number of corners in item n(1)=4

Item co-ordinates

Corner 1	x=	ox(1)=0
	y=	oy(1)=0
Corner 2	x=	ox(2)=1000
	y=	oy(2)=0
Corner 3	x=	ox(3)=1000
	y=	oy(3)=500
Corner 4	x=	ox(4)=0
	y=	oy(4)=500

Plot of Item Details

Item details

Item 2 is a polygon

Item weighting		iw(2)=-1
Number of corners in item		n(2)=4

Item co-ordinates

Corner 1	x=	ox(51)=100
	y=	oy(51)=100
Corner 2	x=	ox(52)=900
	y=	oy(52)=100
Corner 3	x=	ox(53)=900
	y=	oy(53)=400
Corner 4	x=	ox(54)=100
	y=	oy(54)=400

Plot of Item Details

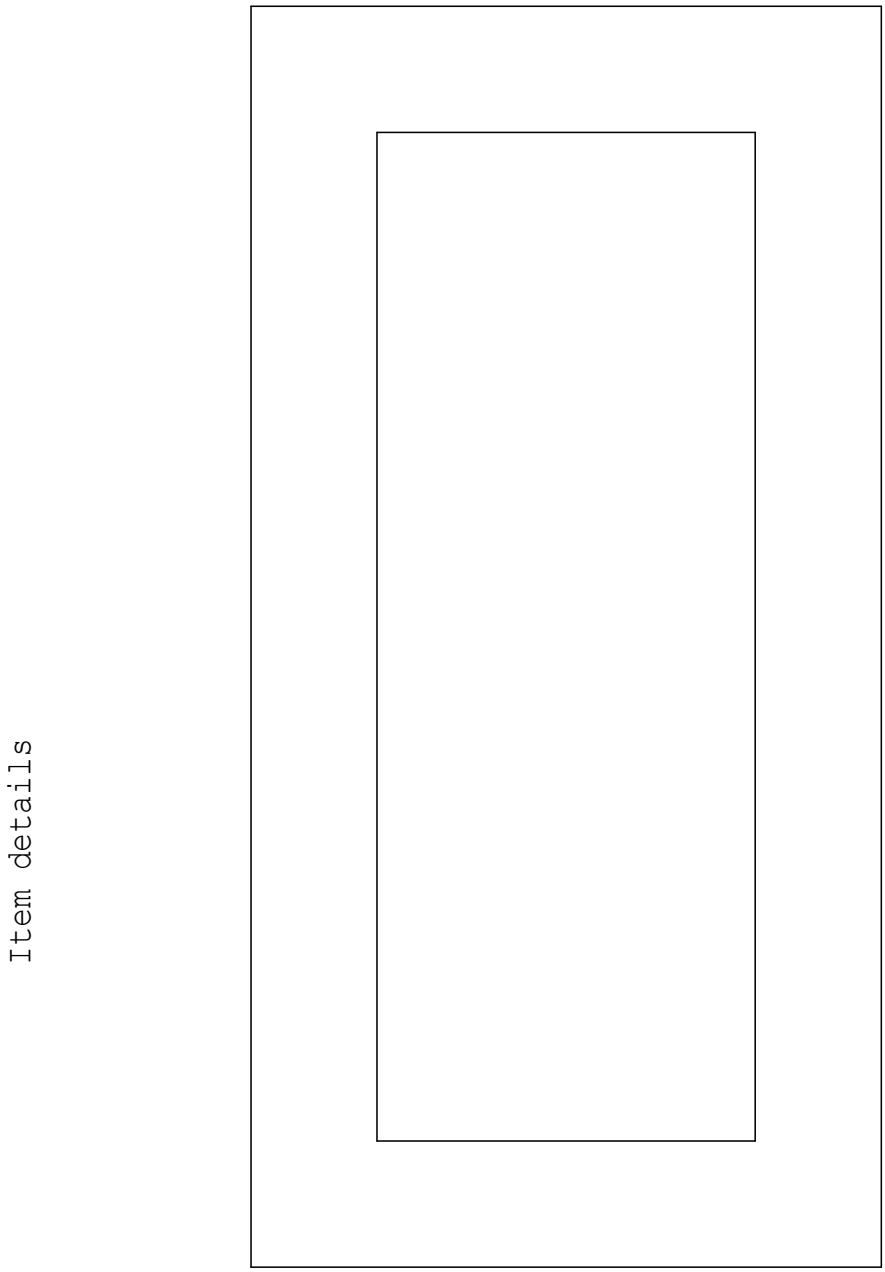

Bar reinforcement details

No of sets of bars	nos=6
Bar set 1	
Number of bars	na(1)=4
Co-ordinates of first bar	xf(1)=60
	yf(1)=60
Co-ordinates of last bar	xl(1)=940
	yl(1)=60
Diameter of bars	da(1)=16
Bar set 2	
Number of bars	na(2)=3
Co-ordinates of first bar	xf(2)=206
	yf(2)=60
Co-ordinates of last bar	xl(2)=794
	yl(2)=60
Diameter of bars	da(2)=12
Bar set 3	
Number of bars	na(3)=3
Co-ordinates of first bar	xf(3)=940
	yf(3)=155
Co-ordinates of last bar	xl(3)=940
	yl(3)=345
Diameter of bars	da(3)=12
Bar set 4	
Number of bars	na(4)=4
Co-ordinates of first bar	xf(4)=60
	yf(4)=440
Co-ordinates of last bar	xl(4)=940
	yl(4)=440
Diameter of bars	da(4)=16
Bar set 5	
Number of bars	na(5)=3
Co-ordinates of first bar	xf(5)=206
	yf(5)=440
Co-ordinates of last bar	xl(5)=794
	yl(5)=440
Diameter of bars	da(5)=12
Bar set 6	
Number of bars	na(6)=3
Co-ordinates of first bar	xf(6)=60
	yf(6)=155

Co-ordinates of last bar	xl(6)=60
	yl(6)=345
Diameter of bars	da(6)=12
Modular ratio	mr=15

Plot of Item Details

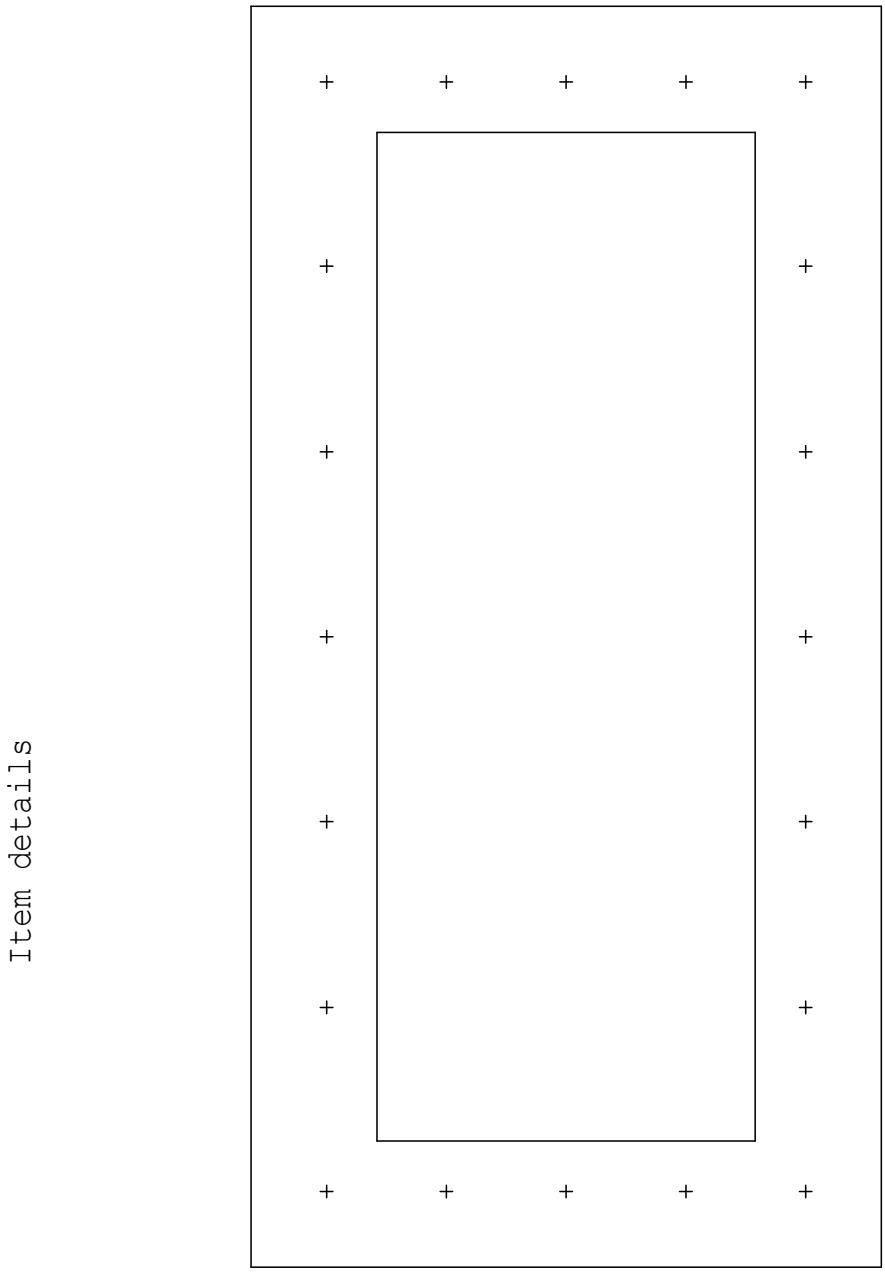

Plot of Section Details

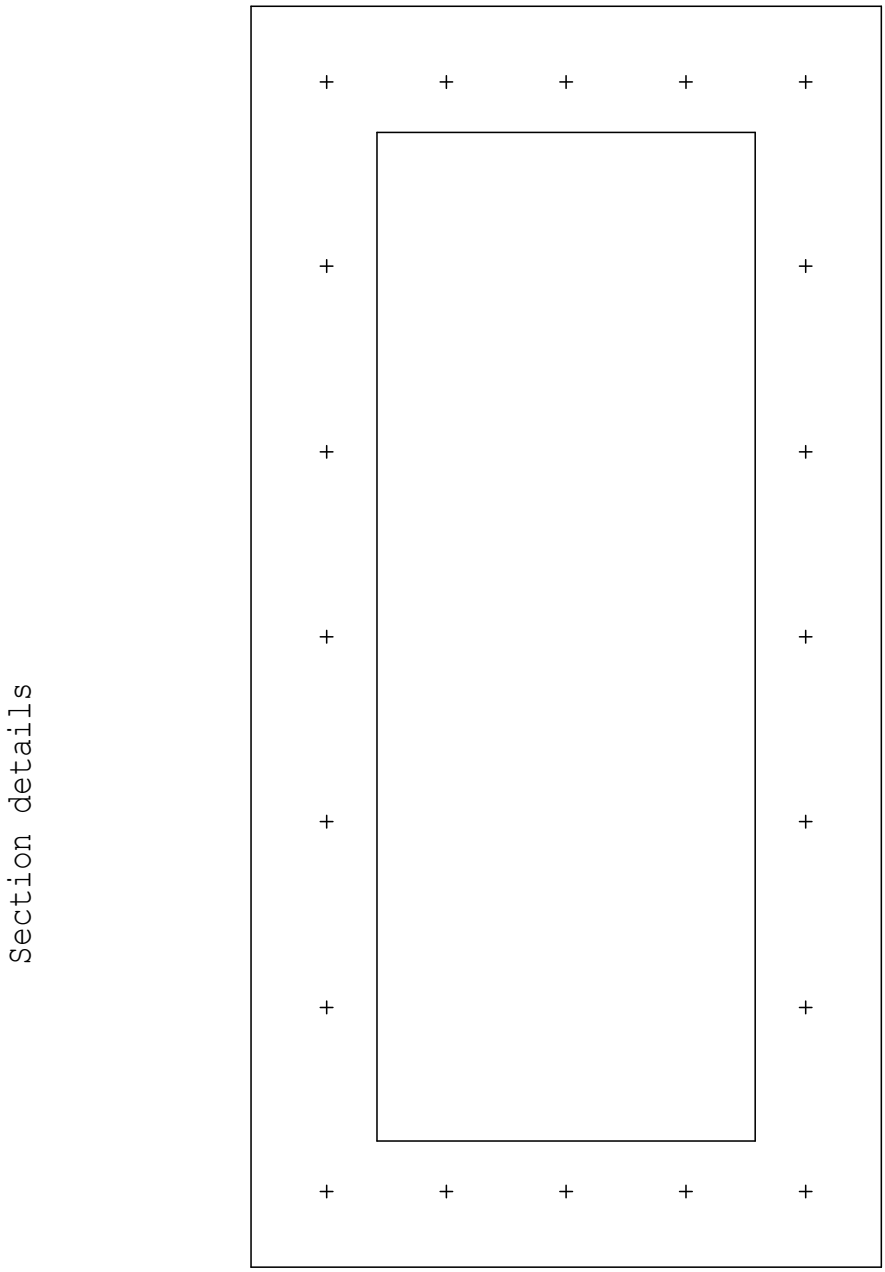

Loading Case 1

Axial Load P(1)=-500 kN
Axial load applied at centroid of stressed section.

Applied moments

About x axis Amx(1)=0 kNm
About y axis Amy(1)=0 kNm

All of section in tension

Centroid of stressed section X=500 Y=250

Design bending moments at centroid of stressed section

About x axis Dmx=Amx(z)=0 kNm
About y axis Dmy=Amy(z)=0 kNm

Reinforcement bar stresses. Tension negative, Compression positive.

Tensile stress in all bars -168.6 N/mm²

Location: Circular section (Cracked)

Elastic biaxial bending of a user defined reinforced concrete section

Units used in the calculations:

Input	Dimensions and bar diameters	mm
	Forces	kN
	Bending moments	kNm
Output	Dimensions and co-ordinates	mm
	Stresses	N/mm²

Sign Convention for loading
A positive axial load causes compression in the section.
A positive moment is clockwise about the x or y axes.

Section details

Number of items in section r=2

Item 1 is a circular section

Item weighting iw(1)=1

Co-ordinates of circle centre xc(1)=300 mm
yc(1)=300 mm

Diameter of circular section cd(1)=600 mm

Plot of Item Details

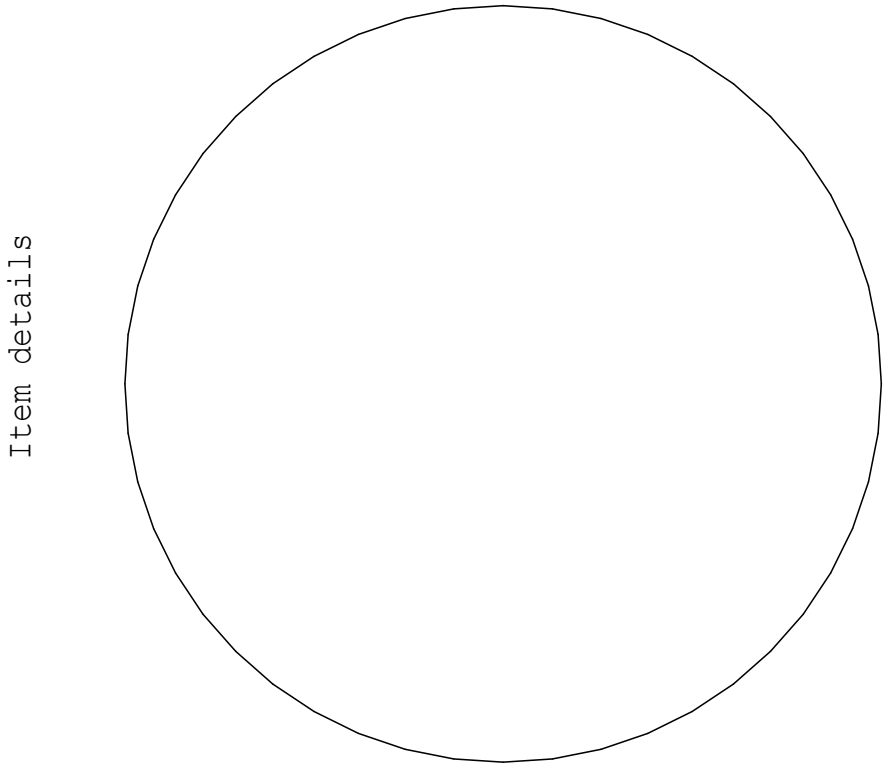

Item 2 is a circular section

Item weighting	iw(2)=-1
Co-ordinates of circle centre	xc(2)=300 mm yc(2)=300 mm
Diameter of circular section	cd(2)=376 mm

Plot of Item Details

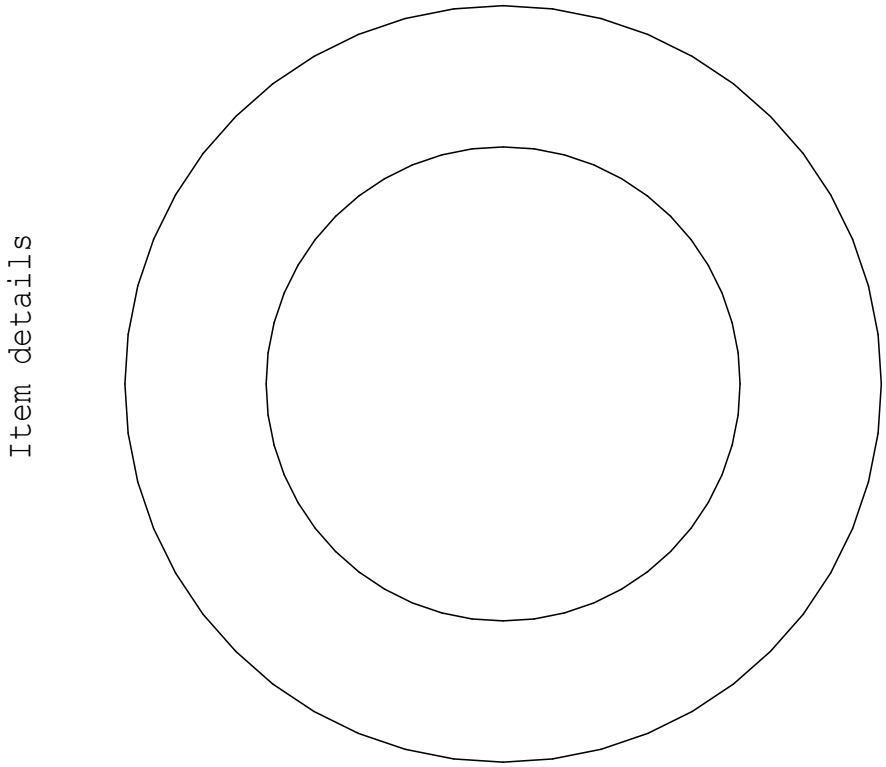

Bar reinforcement details

No of sets of bars	nos=8
Bar set 1	
Number of bars	na(1)=1
Co-ordinates of bar	xf(1)=300
	yf(1)=544
Diameter of bar	da(1)=16
Bar set 2	
Number of bars	na(2)=1
Co-ordinates of bar	xf(2)=56
	yf(2)=300
Diameter of bar	da(2)=16
Bar set 3	
Number of bars	na(3)=1
Co-ordinates of bar	xf(3)=300
	yf(3)=56
Diameter of bar	da(3)=16
Bar set 4	
Number of bars	na(4)=1
Co-ordinates of bar	xf(4)=544
	yf(4)=300
Diameter of bar	da(4)=16
Bar set 5	
Number of bars	na(5)=1
Co-ordinates of bar	xf(5)=127.47
	yf(5)=472.53
Diameter of bar	da(5)=12
Bar set 6	
Number of bars	na(6)=1
Co-ordinates of bar	xf(6)=127.47
	yf(6)=127.47
Diameter of bar	da(6)=12
Bar set 7	
Number of bars	na(7)=1
Co-ordinates of bar	xf(7)=472.53
	yf(7)=127.47
Diameter of bar	da(7)=12
Bar set 8	

Number of bars	na(8)=1
Co-ordinates of bar	xf(8)=472.53
	yf(8)=472.53
Diameter of bar	da(8)=12
Modular ratio	mr=15

Plot of Item Details

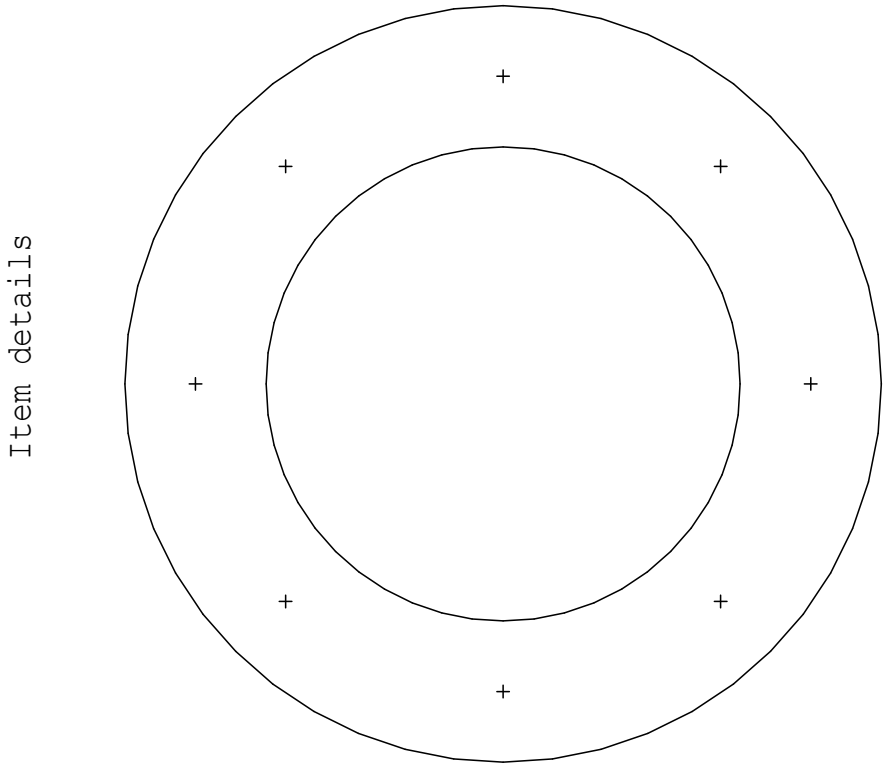

Plot of Section Details

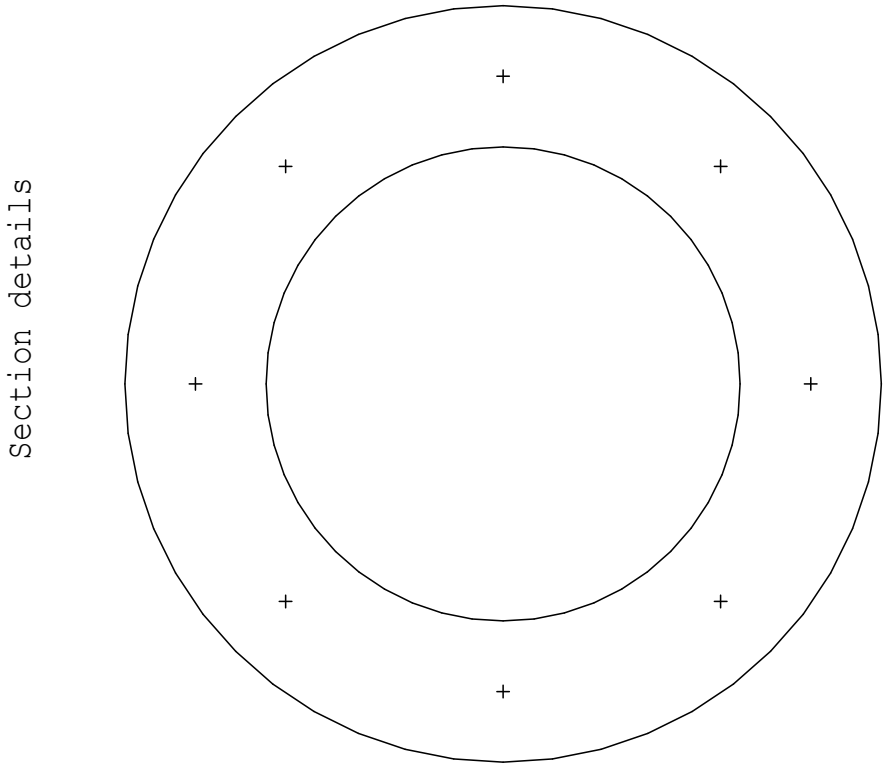

Loading Case 1

Axial Load P(1)=1000 kN
Axial load applied at centroid of stressed section.

Applied moments

About x axis Amx(1)=-200 kNm
About y axis Amy(1)=300 kNm

Plot of Cracked Section

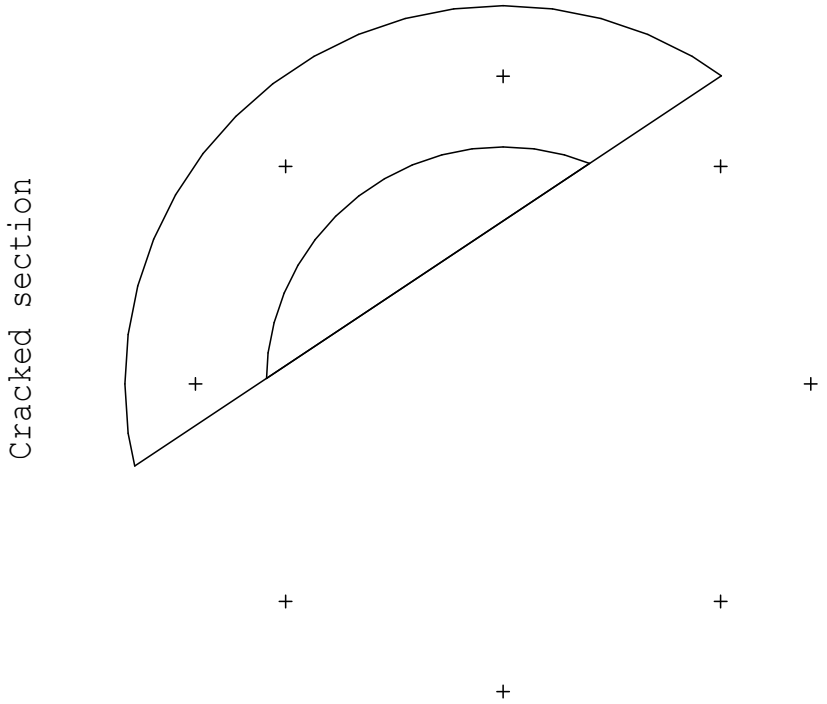

Section is cracked

Neutral axis line

Item 1

x=234.9 y=592.27
x=544.34 y=126.85

Item 2

x=474.83 y=231.41
x=304.42 y=487.71

Centroid of stressed section X=427.2 Y=384.28

Design bending moments at centroid of stressed section

About x axis Dmx=Amx(z)=-200 kNm
About y axis Dmy=Amy(z)=300 kNm
Maximum compressive stresses in concrete

	Co-ordinates x	y	Stress
Item 1			
	559.81	450	54.013
Item 2			
	462.81	394	22.534

Reinforcement bar stresses. Tension negative, Compression positive.

Bar No.	Bar Set	Co-ordinates x	y	Diameter	Stress
1	1	300	544	16	116.09
2	2	56	300	16	-1312.9
3	3	300	56	16	-1025.2
4	4	544	300	16	403.76
5	5	127.47	472.53	12	-657.99
6	6	127.47	127.47	12	-1465
7	7	472.53	127.47	12	-251.16
8	8	472.53	472.53	12	555.86

Number of iterations 7

Location: Dodecagon with circular void

Elastic biaxial bending of a user defined reinforced concrete section

Units used in the calculations:

Input	Dimensions and bar diameters	mm
	Forces	kN
	Bending moments	kNm
Output	Dimensions and co-ordinates	mm
	Stresses	N/mm²

Sign Convention for loading
A positive axial load causes compression in the section.
A positive moment is clockwise about the x or y axes.

Section details

Number of items in section r=2

Item 1 is a polygon

Item weighting iw(1)=1
Number of corners in item n(1)=12

Item co-ordinates

Corner 1	x=	ox(1)=0
	y=	oy(1)=0
Corner 2	x=	ox(2)=50
	y=	oy(2)=0
Corner 3	x=	ox(3)=75
	y=	oy(3)=100
Corner 4	x=	ox(4)=100
	y=	oy(4)=100
Corner 5	x=	ox(5)=125
	y=	oy(5)=0
Corner 6	x=	ox(6)=175
	y=	oy(6)=0
Corner 7	x=	ox(7)=200
	y=	oy(7)=100
Corner 8	x=	ox(8)=250
	y=	oy(8)=100
Corner 9	x=	ox(9)=275
	y=	oy(9)=0
Corner 10	x=	ox(10)=350
	y=	oy(10)=0
Corner 11	x=	ox(11)=350
	y=	oy(11)=350
Corner 12	x=	ox(12)=0
	y=	oy(12)=350

Plot of Item Details

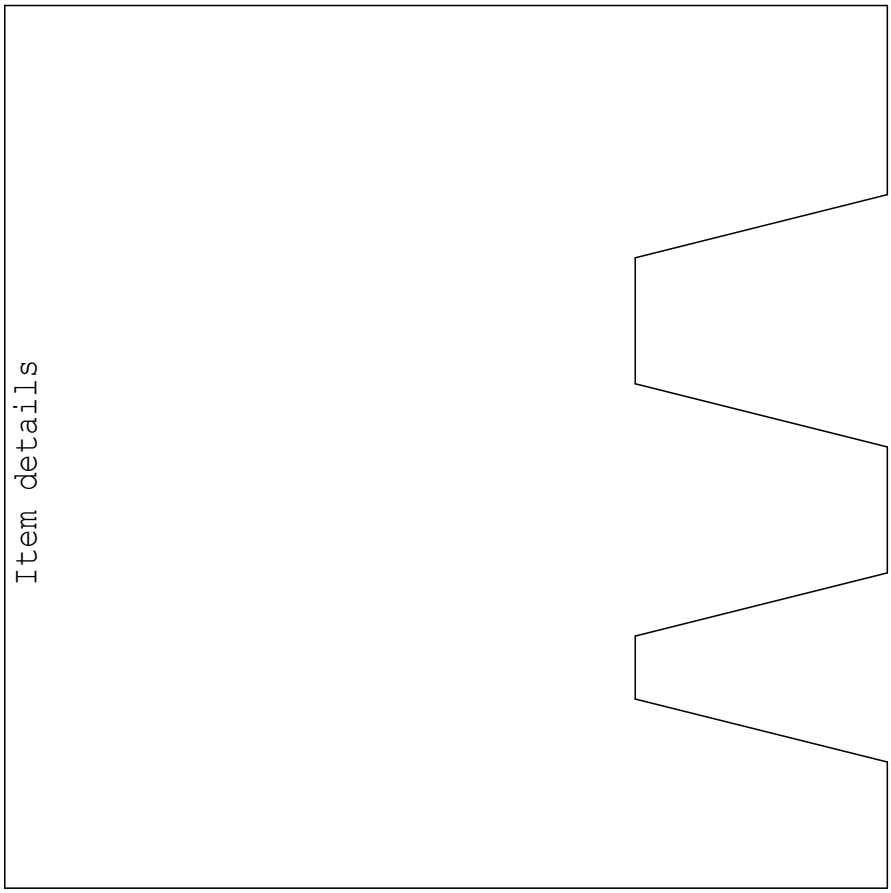

Item 2 is a circular section

Item weighting	iw(2)=-1
Co-ordinates of circle centre	xc(2)=150 mm yc(2)=200 mm
Diameter of circular section	cd(2)=200 mm

Plot of Item Details

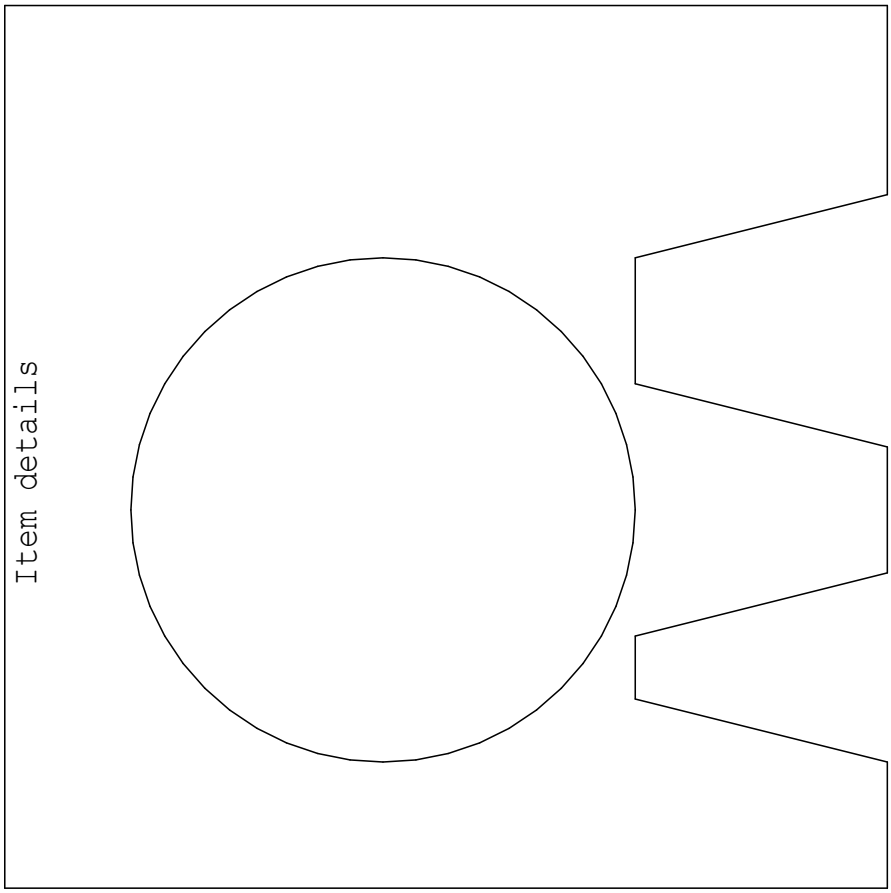

Bar reinforcement details

No of sets of bars	nos=2
Bar set 1	
Number of bars	na(1)=2
Co-ordinates of first bar	xf(1)=50
	yf(1)=300
Co-ordinates of last bar	xl(1)=300
	yl(1)=300
Diameter of bars	da(1)=12
Bar set 2	
Number of bars	na(2)=2
Co-ordinates of first bar	xf(2)=50
	yf(2)=50
Co-ordinates of last bar	xl(2)=300
	yl(2)=50
Diameter of bars	da(2)=12
Modular ratio	mr=15

Plot of Item Details

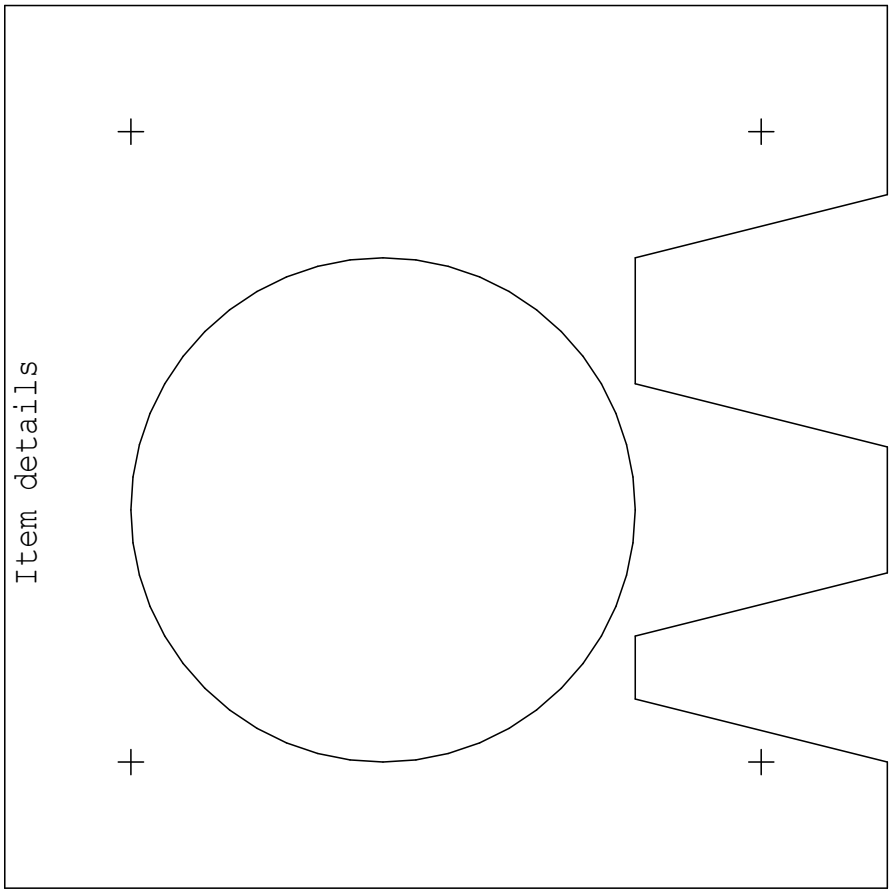

Plot of Section Details

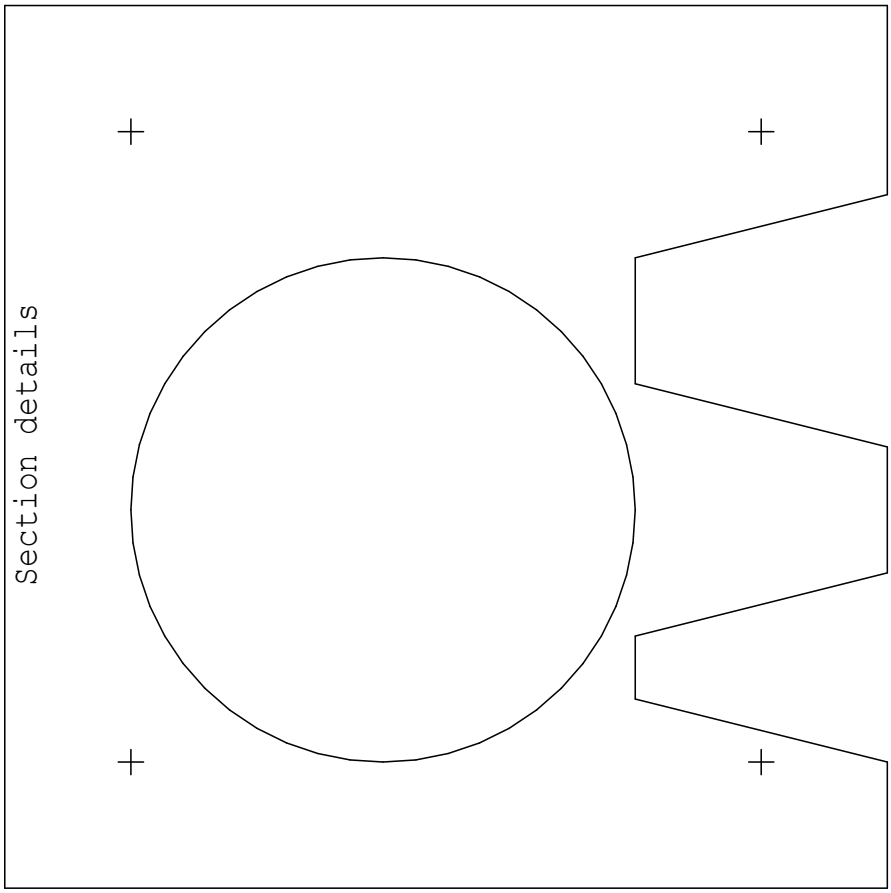

Loading Case 1

Axial Load	P(1)=1000 kN
Axial load fixed in position.	
x co-ordinate	xp(1)=155 mm
y co-ordinate	yp(1)=175 mm
Applied moments	
About x axis	Amx(1)=300 kNm
About y axis	Amy(1)=125 kNm

Plot of Cracked Section

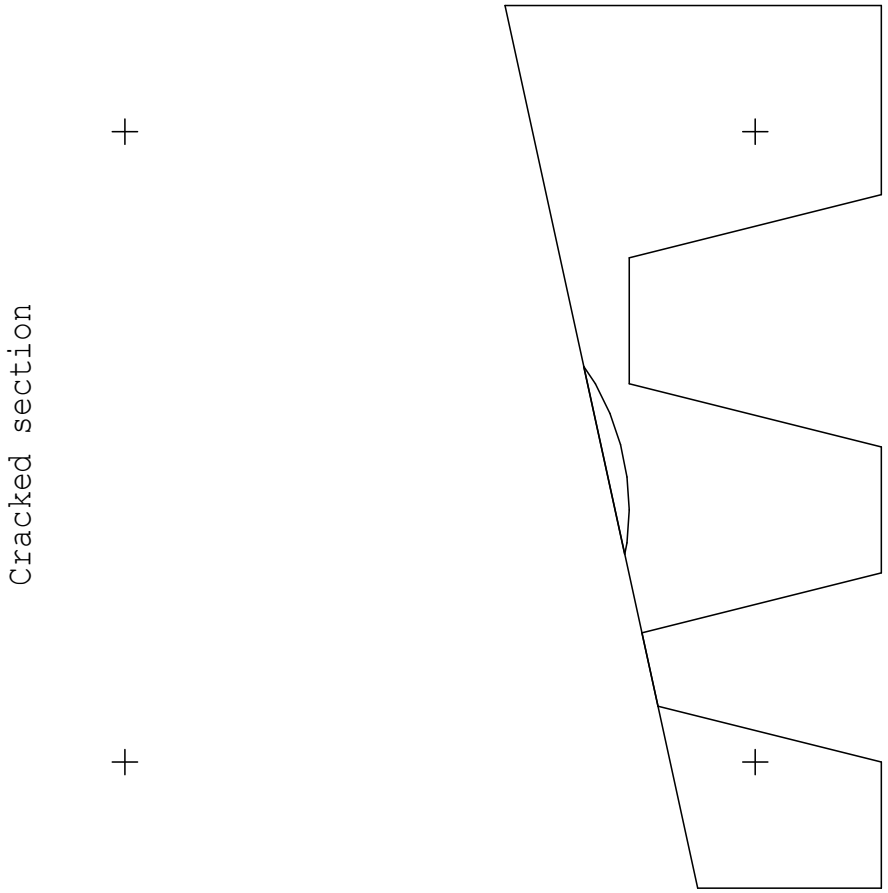

Section is cracked

Neutral axis line

Item 1

x=72.151	y=88.606
x=101.26	y=94.959
x=350	y=149.25
x=0	y=72.859

Item 2

x=132.41	y=101.76
x=206.91	y=118.02

Centroid of stressed section X=200.17 Y=87.22

Design bending moments at centroid of stressed section

About x axis Dmx=-P(z)*(yp(z)-Y)/1000+Amx(z)
=212.22 kNm

About y axis Dmy=P(z)*(xp(z)-X)/1000+Amy(z)
=79.83 kNm

Maximum compressive stresses in concrete

	Co-ordinates x	y	Stress
Item 1			
	350	0	155.37
Item 2			
	175.88	103.41	8.1591

Reinforcement bar stresses. Tension negative, Compression positive.

Bar No.	Bar Set	Co-ordinates x	y	Diameter	Stress
1	1	50	300	12	-3376.5
2	1	300	300	12	-2524.5
3	2	50	50	12	527.36
4	2	300	50	12	1379.4

Number of iterations 7

Copyright 1986-2024 Fitzroy Systems Ltd.

Location: Dumb-bell with circular voids

Elastic biaxial bending of a user defined reinforced concrete section

Units used in the calculations:

Input	Dimensions and bar diameters	mm
	Forces	kN
	Bending moments	kNm
Output	Dimensions and co-ordinates	mm
	Stresses	N/mm²

Sign Convention for loading
A positive axial load causes compression in the section.
A positive moment is clockwise about the x or y axes.

Section details

Number of items in section r=5

Item 1 is a polygon

Item weighting iw(1)=1
Number of corners in item n(1)=4

Item co-ordinates

Corner 1	x=	ox(1)=0
	y=	oy(1)=0
Corner 2	x=	ox(2)=500
	y=	oy(2)=0
Corner 3	x=	ox(3)=500
	y=	oy(3)=500
Corner 4	x=	ox(4)=0
	y=	oy(4)=500

Plot of Item Details

Item details

Item 2 is a polygon

Item weighting		iw(2)=1
Number of corners in item		n(2)=4

Item co-ordinates

Corner 1	x=	ox(51)=1000
	y=	oy(51)=0
Corner 2	x=	ox(52)=1500
	y=	oy(52)=0
Corner 3	x=	ox(53)=1500
	y=	oy(53)=500
Corner 4	x=	ox(54)=1000
	y=	oy(54)=500

Plot of Item Details

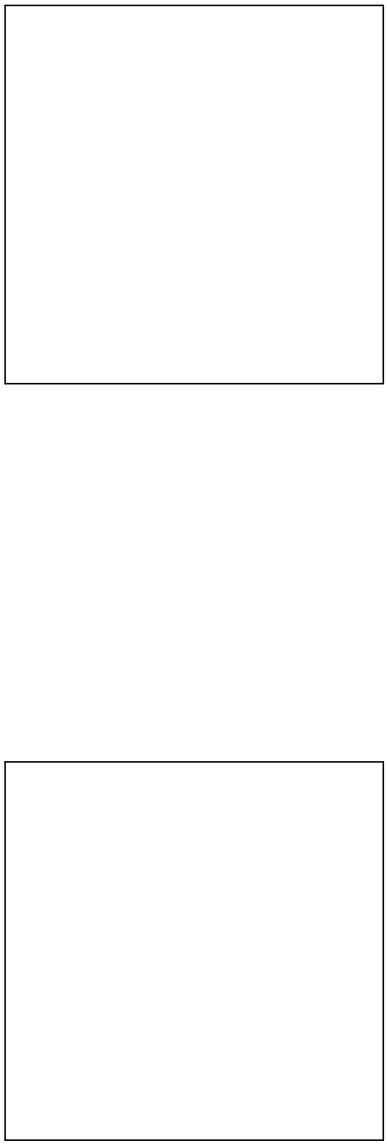

Item 3 is a polygon

Item weighting		iw(3)=1
Number of corners in item		n(3)=4

Item co-ordinates

Corner 1	x=	ox(101)=500
	y=	oy(101)=150
Corner 2	x=	ox(102)=1000
	y=	oy(102)=150
Corner 3	x=	ox(103)=1000
	y=	oy(103)=350
Corner 4	x=	ox(104)=500
	y=	oy(104)=350

Plot of Item Details

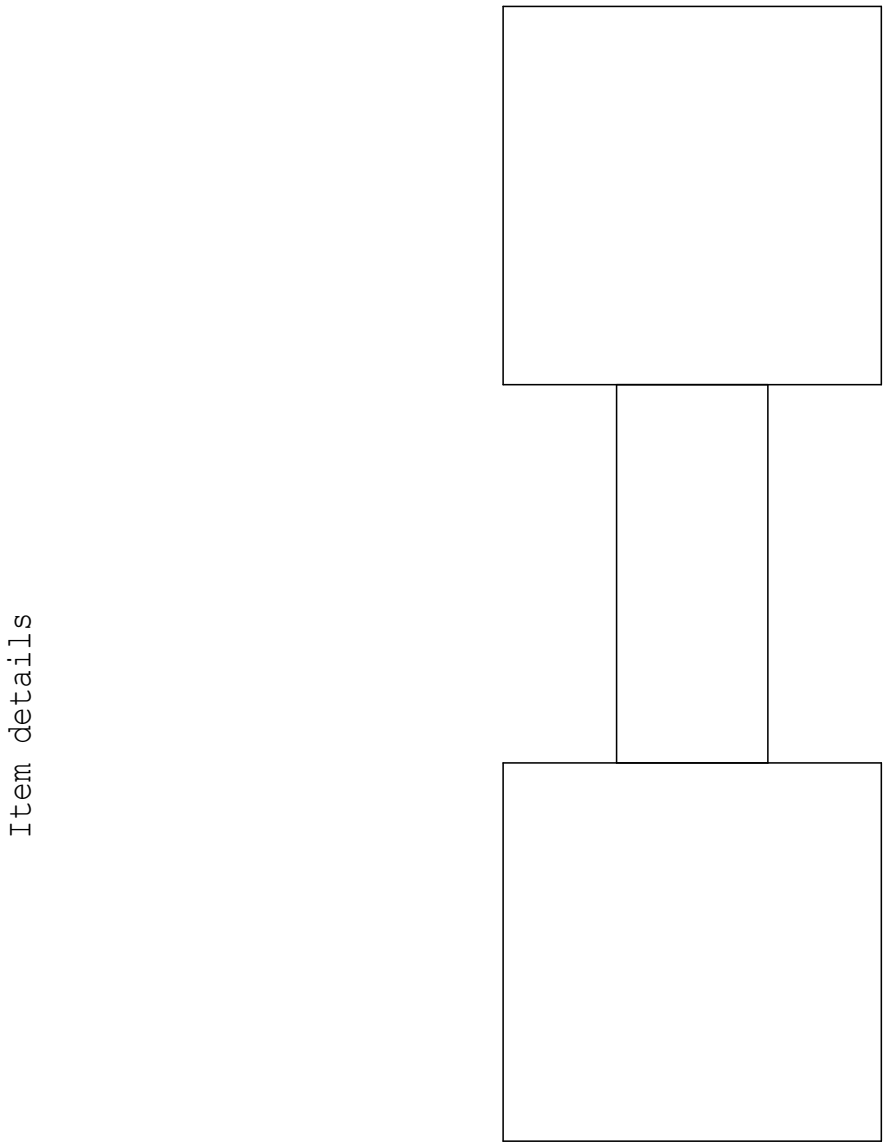

Item 4 is a circular section

Item weighting	iw(4)=-1
Co-ordinates of circle centre	xc(4)=250 mm yc(4)=250 mm
Diameter of circular section	cd(4)=300 mm

Plot of Item Details

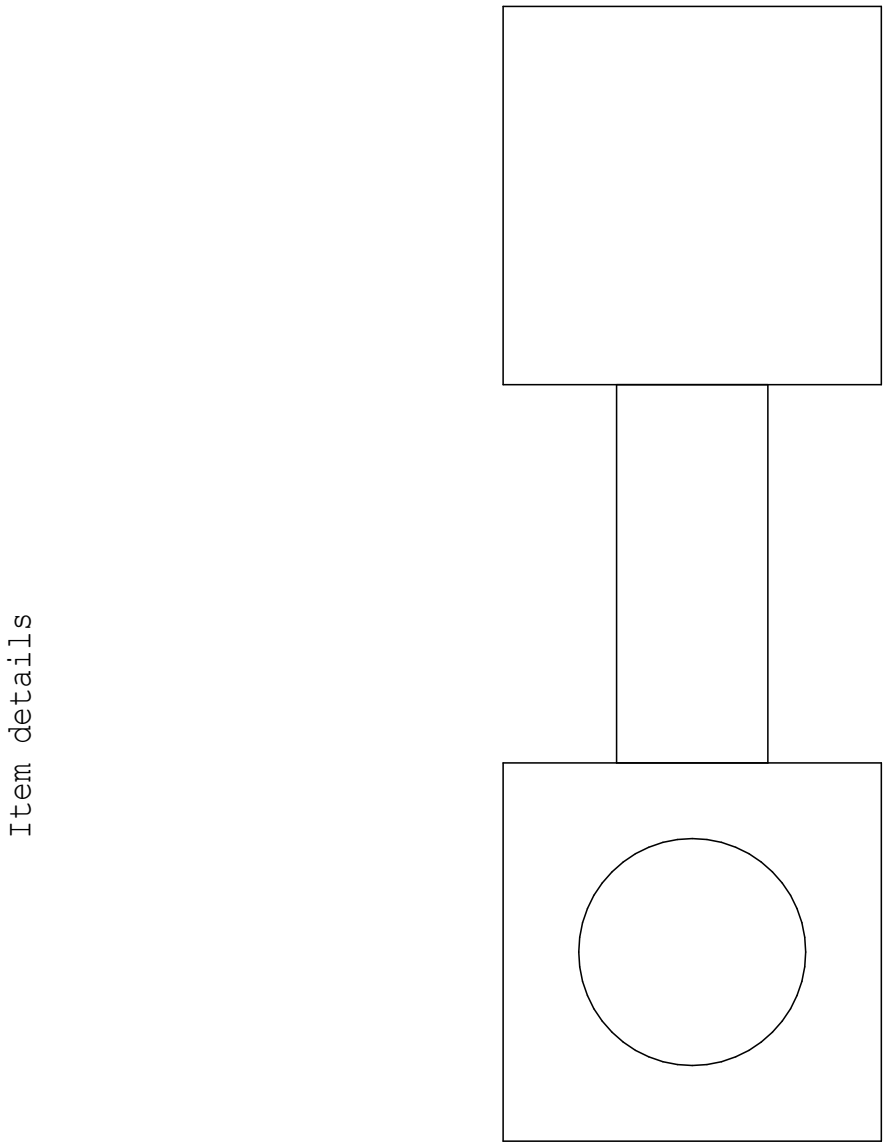

Item 5 is a circular section

Item weighting	iw(5)=-1
Co-ordinates of circle centre	xc(5)=1250 mm yc(5)=250 mm
Diameter of circular section	cd(5)=300 mm

Plot of Item Details

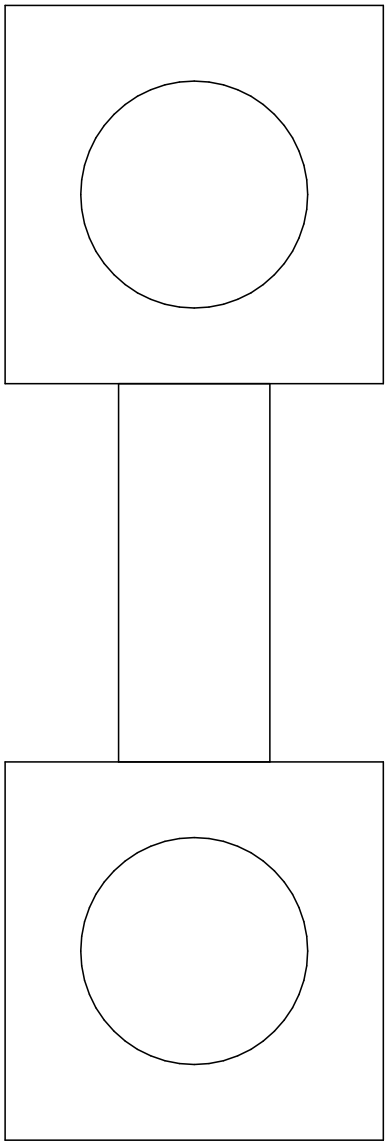

Item details

Bar reinforcement details

No of sets of bars	nos=5
Bar set 1	
Number of bars	na(1)=2
Co-ordinates of first bar	xf(1)=50
	yf(1)=50
Co-ordinates of last bar	xl(1)=450
	yl(1)=50
Diameter of bars	da(1)=25
Bar set 2	
Number of bars	na(2)=2
Co-ordinates of first bar	xf(2)=50
	yf(2)=450
Co-ordinates of last bar	xl(2)=450
	yl(2)=450
Diameter of bars	da(2)=25
Bar set 3	
Number of bars	na(3)=2
Co-ordinates of first bar	xf(3)=1050
	yf(3)=50
Co-ordinates of last bar	xl(3)=1450
	yl(3)=50
Diameter of bars	da(3)=25
Bar set 4	
Number of bars	na(4)=2
Co-ordinates of first bar	xf(4)=1050
	yf(4)=450
Co-ordinates of last bar	xl(4)=1450
	yl(4)=450
Diameter of bars	da(4)=25
Bar set 5	
Number of bars	na(5)=2
Co-ordinates of first bar	xf(5)=550
	yf(5)=250
Co-ordinates of last bar	xl(5)=950
	yl(5)=250
Diameter of bars	da(5)=16
Modular ratio	mr=15

Plot of Item Details

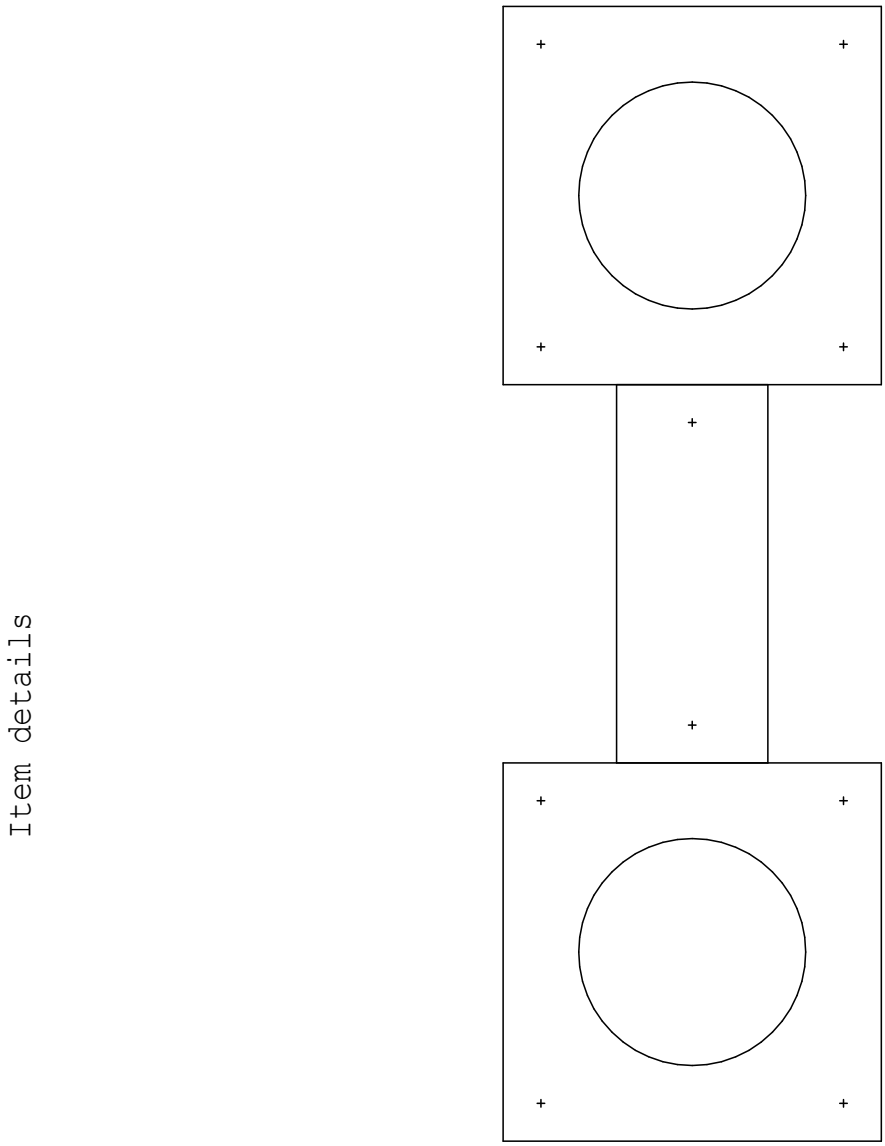

Plot of Section Details

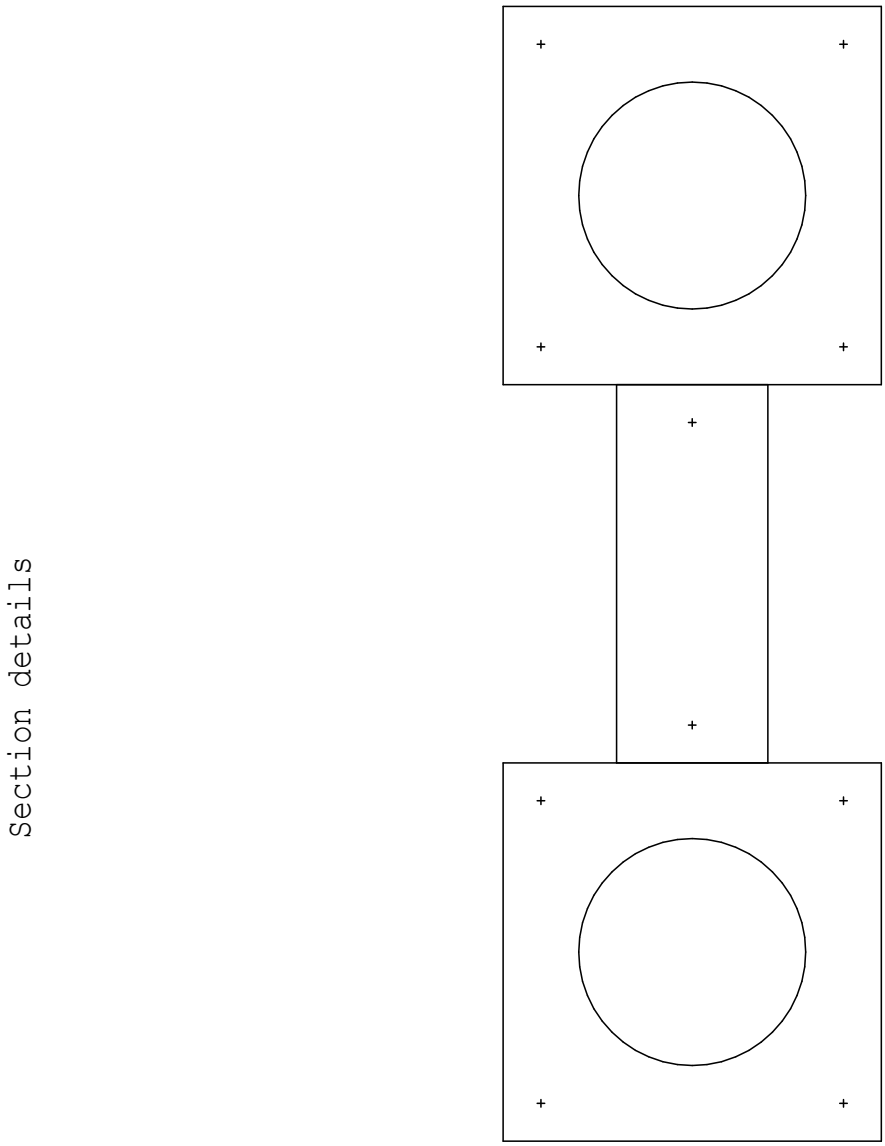

Loading Case 1

Axial Load	P(1)=2000 kN
Axial load fixed in position.	
x co-ordinate	xp(1)=750 mm
y co-ordinate	yp(1)=250 mm
Applied moments	
About x axis	Amx(1)=-500 kNm
About y axis	Amy(1)=500 kNm

Plot of Cracked Section

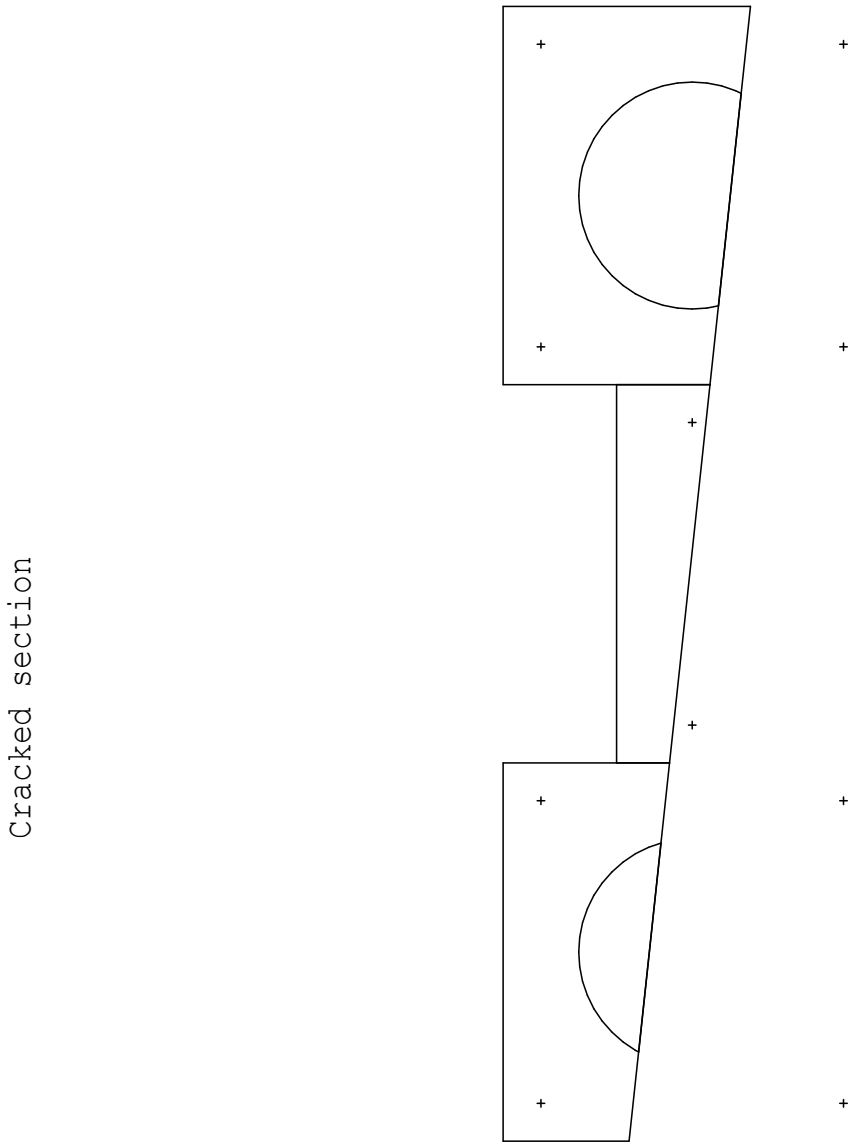

Section is cracked

Neutral axis line

Item 1

x=500	y=279.94
x=0	y=333.4

Item 2

x=1500	y=173.03
x=1000	y=226.49

Item 3

x=1000	y=226.49
x=500	y=279.94

Item 4

x=118.02	y=320.78
x=394.06	y=291.27

Item 5

x=1104.3	y=215.34
x=1385	y=185.33

Centroid of stressed section X=798.61 Y=347.16

Design bending moments at centroid of stressed section

About x axis Dmx=-P(z)*(yp(z)-Y)/1000+Amx(z)
=-305.68 kNm

About y axis Dmy=P(z)*(xp(z)-X)/1000+Amy(z)
=402.78 kNm

Maximum compressive stresses in concrete

	Co-ordinates x	Co-ordinates y	Stress
Item 1	500	500	15.347
Item 2	1500	500	22.803
Item 3	1000	350	8.614
Item 4	269.58	398.72	6.5655
Item 5	1269.6	398.72	14.022

Reinforcement bar stresses. Tension negative, Compression positive.

Bar No.	Bar Set	Co-ordinates x	y	Diameter	Stress
1	1	50	50	25	-290.88
2	1	450	50	25	-246.14
3	2	50	450	25	127.57
4	2	450	450	25	172.31
5	3	1050	50	25	-179.04
6	3	1450	50	25	-134.3
7	4	1050	450	25	239.42
8	4	1450	450	25	284.15
9	5	550	250	16	-25.732
10	5	950	250	16	19.005

Number of iterations 7

Location: Beam on grid line A3

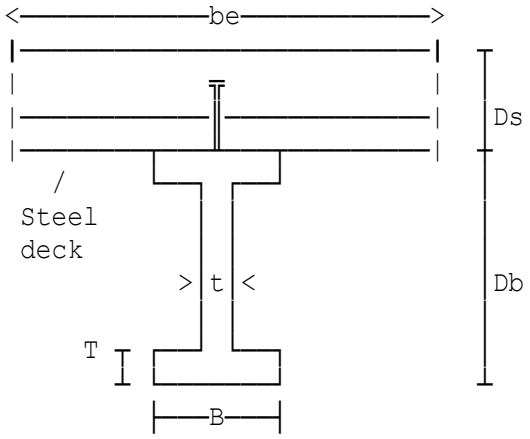

Composite steel deck floor

Internal beam with U.D.Loading

Calculations in accordance with BS 5950 Part 3 Section 3.1 'Code of practice for design of simple and continuous composite beams'- July 1990 and with 'BS 5950-1: 2000' for construction stage design.

Deck ribs transverse to beam.

Beam span	L1=9 m
Beam centres(floor width carried)	C=3 m
Concrete cube strength	fcu=25 N/mm²
Air dry density for concrete	Dc=17.6 kN/m³
Freshwet density for concrete	D'c=18.8 kN/m³
Deck spans onto supporting beam.	
305 x 102 x 33 UB.	
Young's Modulus	E=205 kN/mm²
Slab depth	Ds=115 mm
Depth of profiling	Dp=50 mm
Centres of profiles	Ct=206 mm
Width at inside of profile	b=78 mm
Width at outside of profile	p=103 mm
Profiled steel deck	decwt=0.12 kN/m²
Reinforcement allowance	reinwt=0.04 kN/m²
Steel beam allowance	selfwt=0.15 kN/m²
Construction load allowance	wc=0.5 kN/m²
Other UDL on beam	w'du=0 kN/m
Ceiling and services	wcs=0.25 kN/m²
Imposed	wi=3 kN/m²
Partitions	wp=1 kN/m²
Wall or other UDL	wdu=0 kN/m

Number of studs across flange nr=1

Check on transverse reinforcement omitted.

COMPOSITE SECTION SUMMARY	**305 x 102 x 33 UB Grade S 355 with 44 No. 19 dia. stud connectors @ 204 centres. Section is satisfactory for construction, composite, elastic, plastic, moment, shear, deflection and natural frequency requirements.**	
	Construction stage moment	**111.86 kNm**
	Steel beam mom. capacity	**170.76 kNm**
	Const. stage deflection	**39.603 mm**
	Composite stage moment	**287.84 kNm**
	Ultimate mom. capacity	**359.16 kNm**
	Vertical shear force	**127.93 kN**
	Ult. shear capacity	**439.59 kN**
	Composite stage deflection	**23.101 mm**

Location: Long span with solid slab

```
<------------be------------>
|-------------------------|  -
|            T            |  |
|-------------||----------|  |Ds
|-------------------------|  -
  /      |    |
 Steel   |    |
 deck    |    |
        >|t|<              |Db
         |    |
    T    |    |
         |    |
         |----|
         |-B--|
```

Composite steel deck floor

Internal beam with U.D.Loading

Calculations in accordance with BS 5950 Part 3 Section 3.1 'Code of practice for design of simple and continuous composite beams'- July 1990 and with 'BS 5950-1: 2000' for construction stage design.

Deck ribs transverse to beam.

Beam span	L1=15 m
Beam centres(floor width carried)	C=3 m
Concrete cube strength	fcu=25 N/mm²
Air dry density for concrete	Dc=17.6 kN/m³
Freshwet density for concrete	D'c=18.8 kN/m³
914 x 305 x 224 UB.	
Young's Modulus	E=205 kN/mm²
Slab depth	Ds=150 mm
Profiled steel deck	decwt=0.12 kN/m²
Reinforcement allowance	reinwt=0.04 kN/m²
Steel beam allowance	selfwt=0.47 kN/m²
Construction load allowance	wc=0.5 kN/m²
Other UDL on beam	w'du=0 kN/m
Ceiling and services	wcs=0.25 kN/m²
Imposed	wi=3 kN/m²
Partitions	wp=1 kN/m²
Wall or other UDL	wdu=0 kN/m
Number of studs across flange	nr=1

Check on transverse reinforcement omitted.

COMPOSITE SECTION SUMMARY	**914 x 305 x 224 UB Grade S 355 with 120 No. 19 dia. stud connectors @ 125 centres. Section is satisfactory for construction, composite, elastic, plastic, moment, shear, deflection and natural frequency requirements.**
	Construction stage moment 474.92 kNm
	Steel beam mom. capacity 3291.3 kNm
	Const. stage deflection 8.8488 mm
	Composite stage moment 955.7 kNm
	Ultimate mom. capacity 4690.8 kNm
	Vertical shear force 254.85 kN
	Ult. shear capacity 2996.4 kN
	Composite stage deflection 5.7455 mm

Location: Example plus fire resistance M.C. method

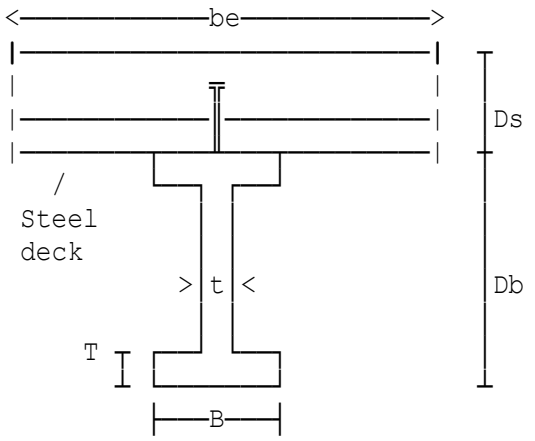

Composite steel deck floor

Internal beam with U.D.Loading

Calculations in accordance with BS 5950 Part 3 Section 3.1 'Code of practice for design of simple and continuous composite beams'- July 1990 and with 'BS 5950-1: 2000' for construction stage design.

Deck ribs transverse to beam.

Beam span	L1=9 m
Beam centres(floor width carried)	C=3 m
Concrete cube strength	fcu=25 N/mm²
Air dry density for concrete	Dc=17.6 kN/m³
Freshwet density for concrete	D'c=18.8 kN/m³
406 x 140 x 39 UB.	
Young's Modulus	E=205 kN/mm²
Slab depth	Ds=115 mm
Profiled steel deck	decwt=0.12 kN/m²
Reinforcement allowance	reinwt=0.04 kN/m²
Steel beam allowance	selfwt=0.15 kN/m²
Construction load allowance	wc=0.5 kN/m²
Other UDL on beam	w'du=0 kN/m
Ceiling and services	wcs=0.25 kN/m²
Imposed	wi=3 kN/m²
Partitions	wp=1 kN/m²
Wall or other UDL	wdu=0 kN/m
Number of studs across flange	nr=1
Spacing of connectors	spac1=225 mm
Check on transverse reinforcement	omitted.
Total permanent load	Vfp=81 kN

COMPOSITE SECTION SUMMARY	**406 x 140 x 39 UB Grade S 355 with 40 No. 19 dia. stud connectors @ 225 centres. Section is satisfactory for construction, composite, elastic, plastic, moment, shear, deflection and natural frequency requirements.**	
	Construction stage moment	**129.38 kNm**
	Steel beam mom. capacity	**257.02 kNm**
	Const. stage deflection	**24.714 mm**
	Composite stage moment	**304.25 kNm**
	Ultimate mom. capacity	**470.68 kNm**
	Vertical shear force	**135.22 kN**
	Ult. shear capacity	**542.55 kN**
	Composite stage deflection	**15.796 mm**
FIRE RESISTANCE SUMMARY	**Exposed surface area**	**1208.6 mm²**
	Area of section	**49.7 cm²**
	Section factor	**240 /m**
	Section does not have an inherent fire resistance of 30 minutes. Fire protection should be provided	

Location: Default example plus fire resistance

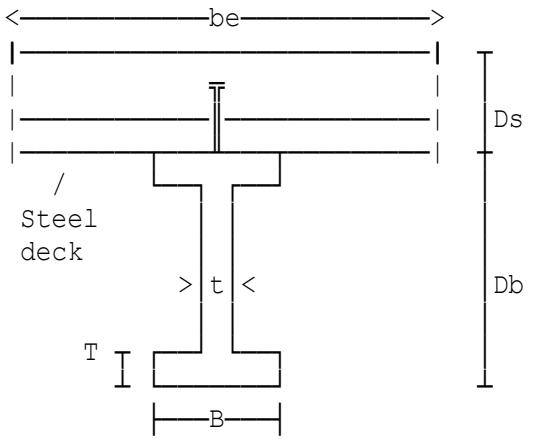

Composite steel deck floor

Internal beam with U.D.Loading

Calculations in accordance with BS 5950 Part 3 Section 3.1 'Code of practice for design of simple and continuous composite beams'- July 1990 and with 'BS 5950-1: 2000' for construction stage design.

Deck ribs transverse to beam.

Beam span	L1=9 m
Beam centres(floor width carried)	C=3 m
Concrete cube strength	fcu=25 N/mm²
Air dry density for concrete	Dc=17.6 kN/m³
Freshwet density for concrete	D'c=18.8 kN/m³
Deck spans onto supporting beam.	
305 x 102 x 33 UB.	
Young's Modulus	E=205 kN/mm²
Slab depth	Ds=115 mm
Depth of profiling	Dp=50 mm
Centres of profiles	Ct=300 mm
Width at inside of profile	b=125 mm
Width at outside of profile	p=175 mm
Profiled steel deck	decwt=0.12 kN/m²
Reinforcement allowance	reinwt=0.04 kN/m²
Steel beam allowance	selfwt=0.15 kN/m²
Construction load allowance	wc=0.5 kN/m²
Other UDL on beam	w'du=0 kN/m
Ceiling and services	wcs=0.25 kN/m²
Imposed	wi=3 kN/m²
Partitions	wp=1 kN/m²
Wall or other UDL	wdu=0 kN/m

Number of studs across flange nr=1
Spacing of connectors spac1=225 mm

Check on transverse reinforcement omitted.

Total permanent load Vfp=81 kN

COMPOSITE SECTION SUMMARY	**305 x 102 x 33 UB Grade S 355 with 40 No. 19 dia. stud connectors @ 225 centres. Section is satisfactory for construction, composite, elastic, plastic, moment, shear, deflection and natural frequency requirements.**	
	Construction stage moment	**109.44 kNm**
	Steel beam mom. capacity	**170.76 kNm**
	Const. stage deflection	**38.506 mm**
	Composite stage moment	**285.57 kNm**
	Ultimate mom. capacity	**352.27 kNm**
	Vertical shear force	**126.92 kN**
	Ult. shear capacity	**439.59 kN**
	Composite stage deflection	**24.569 mm**
FIRE RESISTANCE SUMMARY	**Exposed surface area**	**919.4 mm²**
	Area of section	**41.8 cm²**
	Section factor	**215 /m**
	Load Ratio (R)	**0.51253**
	Section does not have an inherent fire resistance of 30 minutes. Fire protection should be provided	

Location: Access steel example

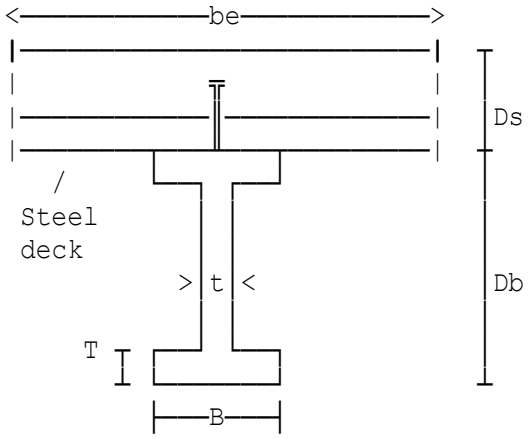

Composite steel deck floor

Internal beam with U.D.Loading

Calculations in accordance with BS 5950 Part 3 Section 3.1 'Code of practice for design of simple and continuous composite beams'- July 1990 and with 'BS 5950-1: 2000' for construction stage design.

Deck ribs transverse to beam.

Beam span	L1=7.5 m
Beam centres(floor width carried)	C=3 m
Concrete cube strength	fcu=25 N/mm²
Air dry density for concrete	Dc=23.6 kN/m³

WARNING:
For lightweight concrete the compressive strength class should be C20/25 to C32/40.
For normal concrete the compressive strength class should be C25/30 to C40/50.

Location: Example 1 - Internal beam with UDL

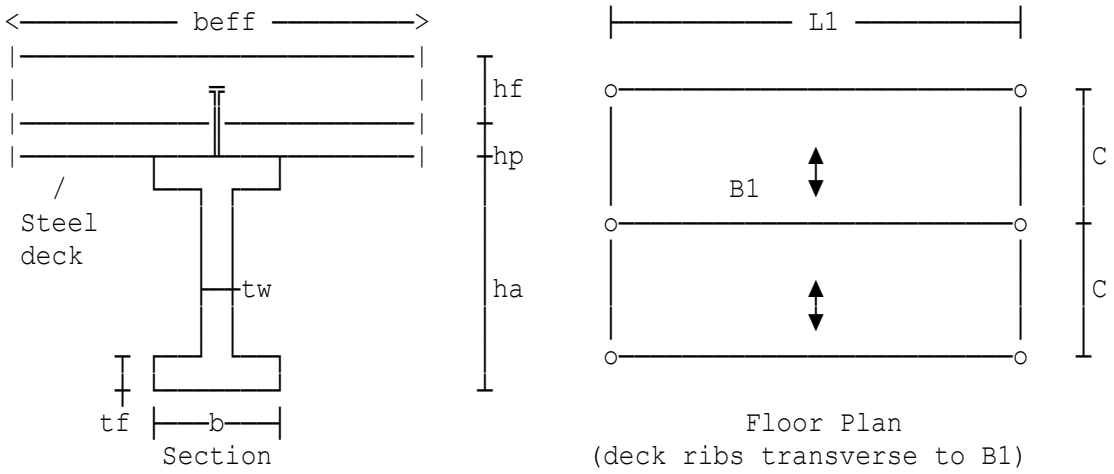

Beam span	L1=9 m
Beam centres(floor width carried)	C=3 m
Concrete density (const.stage)	D'c=19 kN/m³
Concrete density (final stage)	Dc=18 kN/m³

Deck spans onto supporting beam and restraints compression flange.
356 x 171 x 51 UKB
Dimensions (mm): h=355 b=171.5 tw=7.4 tf=11.5 r=10.2
Properties (cm): Iy=14100 Iz=968 Wply=896 Wplz=174 It=23.8

Partial safety factor (reinfnt.)	gams=1.15
Partial safety factor (concrete)	gamc=1.5
Partial safety factor (steel)	gamM0=1.0
Partial safety factor (steel)	gamM1=1.0
Partial safety factor (studs)	gamv=1.25
Permanent load (ULS)	gamG=1.25
Variable load (ULS)	gamQ=1.5

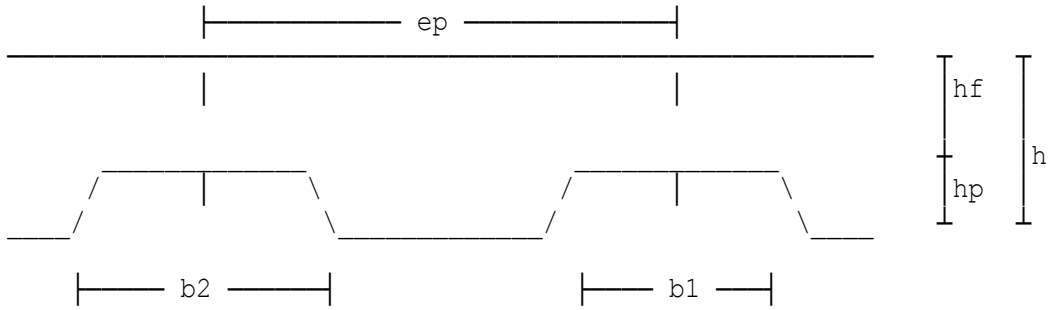

Depth of concrete above profile	hf=80 mm
Depth of profiling	hp=50 mm
Centres of profiles	ep=206 mm
Width at inside of profile	b1=78 mm
Width at outside of profile	b2=103 mm
Thickness of sheeting	tp=0.75 mm
Mean width of concrete ribs	b0=90.5 mm
Weight of steel decking	fsd=0.12 kN/m²
Variable load (const.stage)	fc=0.75 kN/m²
Variable load (final stage)	fi=3 kN/m²

Partition load	fp=1 kN/m²
Ceiling and services	fcs=0.25 kN/m²
Raised floor	fr=0 kN/m²
Wall or other UDL (final stage)	fw=0 kN/m
Char yield strength of reinft.	fyk=500 N/mm²

DESIGN SUMMARY	**356 x 171 x 51 UKB Grade**	**S 355**
CONSTRUCTION	**Steel yield strength**	**355 N/mm²**
STAGE	**Concrete strength**	**25 N/mm²**
	Maximum moment	**132 kNm**
	Moment resistance	**318 kNm**
	Unity factor	**0.414 ≤ 1**
	Maximum shear force	**58.5 kN**
	Shear resistance	**587 kN**
	Unity factor	**0.1 ≤ 1**
	Deflection to span ratio (G + Q)	**1: 313**
DESIGN SUMMARY	**Effective width**	**2.25 m**
FINAL STAGE	**Stud shear resistance**	**61.7 kN**
	Number of studs per rib	**1 No.**
	Number of 19 mm studs	**43 No.**
	Stud spacing	**206 mm**
	Design compressive force:	
	Concrete	**2304 kN**
	Studs	**1327 kN**
	Shear connection ratio	**0.576**
	Partial shear connection	**provided**
	Maximum moment	**289 kNm**
	Moment resistance	**519 kNm**
	Unity factor bending	**0.557 ≤ 1**
	Maximum shear force	**129 kN**
	Shear plastic resistance	**587 kN**
	Unity factor shear	**0.219 ≤ 1**
	Deflection to span ratio at final stage (G + Q)	**1: 268**
	Slab shear stress	**1.84 N/mm²**
	Slab resistance	**2.51 N/mm²**
	Min transverse reinft.	**169 mm²/m**
	Lightweight concrete (LWC) assumed	

Location: Example 2 - Solid slab

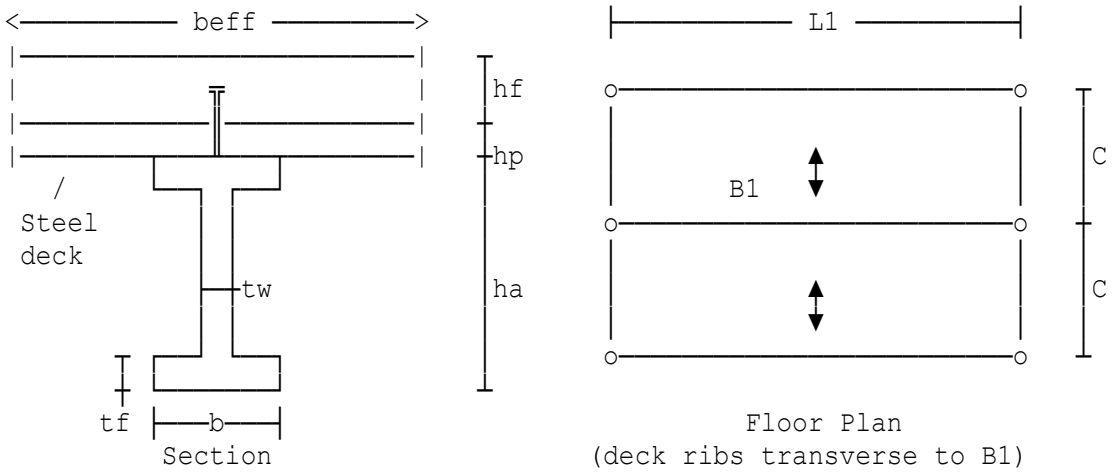

Beam span	L1=15 m
Beam centres(floor width carried)	C=3 m
Concrete density (const.stage)	D'c=18.8 kN/m³
Concrete density (final stage)	Dc=17.6 kN/m³

914 x 305 x 224 UKB
Dimensions (mm): h=910.4 b=304.1 tw=15.9 tf=23.9 r=19.1
Properties (cm): Iy=376000 Iz=11200 Wply=9540 Wplz=1160 It=422

Partial safety factor (reinfnt.)	gams=1.15
Partial safety factor (concrete)	gamc=1.5
Partial safety factor (steel)	gamM0=1.0
Partial safety factor (steel)	gamM1=1.0
Partial safety factor (studs)	gamv=1.25
Permanent load (ULS)	gamG=1.25
Variable load (ULS)	gamQ=1.5
Variable load (const.stage)	fc=0.5 kN/m²
Variable load (final stage)	fi=3 kN/m²
Partition load	fp=1 kN/m²
Ceiling and services	fcs=0.25 kN/m²
Raised floor	fr=0 kN/m²
Wall or other UDL (final stage)	fw=0 kN/m
Stud spacing	spac=200 mm
Governing shear length	hf=150 mm
Char yield strength of reinft.	fyk=500 N/mm²

DESIGN SUMMARY	**914 x 305 x 224 UKB Grade S 355**	
CONSTRUCTION	**Steel yield strength**	**345 N/mm²**
STAGE	**Concrete strength**	**25 N/mm²**
	Maximum moment	**474 kNm**
	Moment resistance	**3291 kNm**
	Unity factor	**0.144 ≤ 1**
	Maximum shear force	**126 kN**
	Shear resistance	**3059 kN**
	Unity factor	**0.041 ≤ 1**
	Deflection to span ratio	
	(G + Q)	**1: 1361**
DESIGN SUMMARY	**Effective width**	**3 m**
FINAL STAGE	**Stud shear resistance**	**65.8 kN**
	Studs across flange	**in pairs**
	Number of 19 mm studs	**150 No.**
	Stud spacing	**200 mm**
	Design compressive force:	
	Concrete	**6375 kN**
	Studs	**4931 kN**
	Shear connection ratio	**0.774**
	Partial shear connection	**provided**
	Maximum moment	**912 kNm**
	Moment resistance	**4751 kNm**
	Unity factor bending	**0.192 ≤ 1**
	Maximum shear force	**243 kN**
	Shear plastic resistance	**3059 kN**
	Unity factor shear	**0.08 ≤ 1**
	Deflection to span ratio	
	at final stage (G + Q)	**1: 1001**
	Slab shear stress	**2.19 N/mm²**
	Slab resistance	**2.37 N/mm²**
	Min transverse reinft.	**377 mm²/m**
	Lightweight concrete (LWC) assumed	

Location: Example 3 - Solid slab

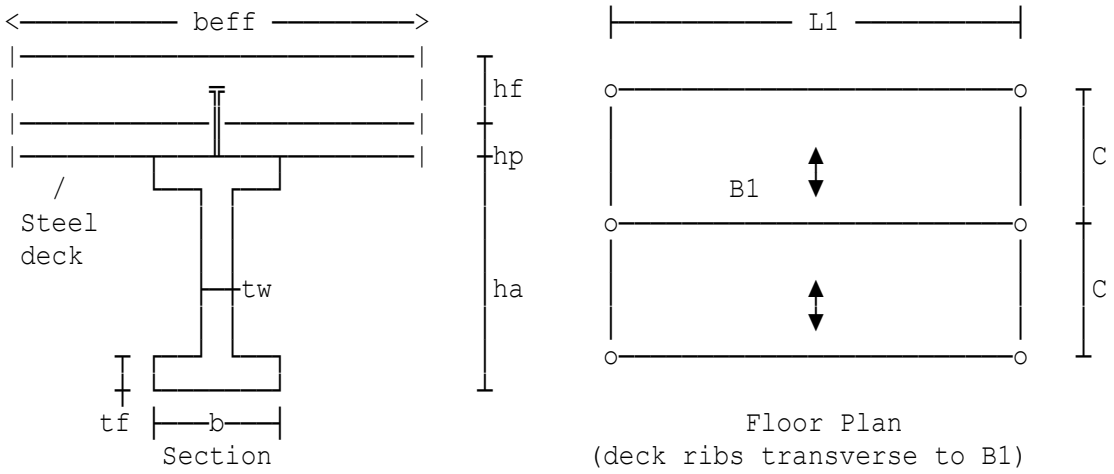

Beam span	L1=9 m
Beam centres(floor width carried)	C=3 m
Concrete density (const.stage)	D'c=18.8 kN/m³
Concrete density (final stage)	Dc=17.6 kN/m³

406 x 140 x 39 UKB
Dimensions (mm): h=398 b=141.8 tw=6.4 tf=8.6 r=10.2
Properties (cm): Iy=12500 Iz=410 Wply=724 Wplz=90.8 It=10.7

Partial safety factor (reinfnt.)	gams=1.15
Partial safety factor (concrete)	gamc=1.5
Partial safety factor (steel)	gamM0=1.0
Partial safety factor (steel)	gamM1=1.0
Partial safety factor (studs)	gamv=1.25
Permanent load (ULS)	gamG=1.25
Variable load (ULS)	gamQ=1.5
Variable load (const.stage)	fc=0.5 kN/m²
Variable load (final stage)	fi=3 kN/m²
Partition load	fp=1 kN/m²
Ceiling and services	fcs=0.25 kN/m²
Raised floor	fr=0 kN/m²
Wall or other UDL (final stage)	fw=0 kN/m
Stud spacing	spac=300 mm
Governing shear length	hf=114.25 mm
Char yield strength of reinft.	fyk=500 N/mm²

DESIGN SUMMARY	**406 x 140 x 39 UKB Grade**	**S 355**
CONSTRUCTION	**Steel yield strength**	**355 N/mm²**
STAGE	**Concrete strength**	**25 N/mm²**
	Maximum moment	**120 kNm**
	Moment resistance	**257 kNm**
	Unity factor	**0.466 ≤ 1**
	Buckling resistance	**148 kNm**
	Unity factor	**0.809 ≤ 1**
	Maximum shear force	**53.2 kN**
	Shear resistance	**566 kN**
	Unity factor	**0.094 ≤ 1**
	Deflection to span ratio	
	(G + Q)	**1: 301**
DESIGN SUMMARY	**Effective width**	**2.25 m**
FINAL STAGE	**Stud shear resistance**	**65.8 kN**
	Number of 19 mm studs	**30 No.**
	Stud spacing	**300 mm**
	Design compressive force:	
	Concrete	**1764 kN**
	Studs	**986 kN**
	Shear connection ratio	**0.559**
	Partial shear connection	**provided**
	Maximum moment	**280 kNm**
	Moment resistance	**398 kNm**
	Unity factor bending	**0.703 ≤ 1**
	Maximum shear force	**124 kN**
	Shear plastic resistance	**566 kN**
	Unity factor shear	**0.22 ≤ 1**
	Deflection to span ratio	
	at final stage (G + Q)	**1: 234**
	Slab shear stress	**0.959 N/mm²**
	Slab resistance	**2.37 N/mm²**
	Min transverse reinft.	**229 mm²/m**
	Lightweight concrete (LWC) assumed	

Location: Example 4

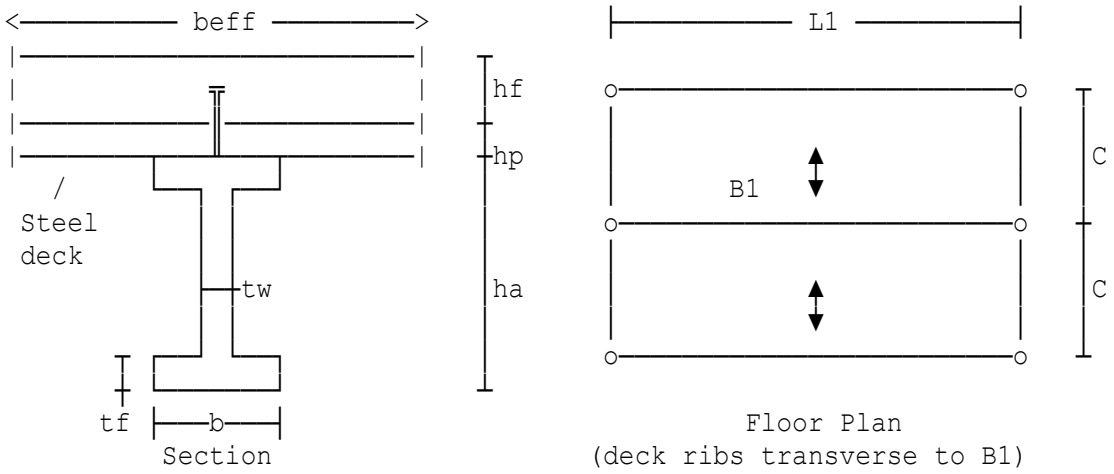

Beam span	L1=9 m
Beam centres(floor width carried)	C=3 m
Concrete density (const.stage)	D'c=18.8 kN/m³
Concrete density (final stage)	Dc=17.6 kN/m³

Deck spans onto supporting beam and restraints compression flange.
356 x 127 x 39 UKB
Dimensions (mm): h=353.4 b=126 tw=6.6 tf=10.7 r=10.2
Properties (cm): Iy=10200 Iz=358 Wply=659 Wplz=89.1 It=15.1

Partial safety factor (reinfnt.)	gams=1.15
Partial safety factor (concrete)	gamc=1.5
Partial safety factor (steel)	gamM0=1.0
Partial safety factor (steel)	gamM1=1.0
Partial safety factor (studs)	gamv=1.25
Permanent load (ULS)	gamG=1.25
Variable load (ULS)	gamQ=1.5

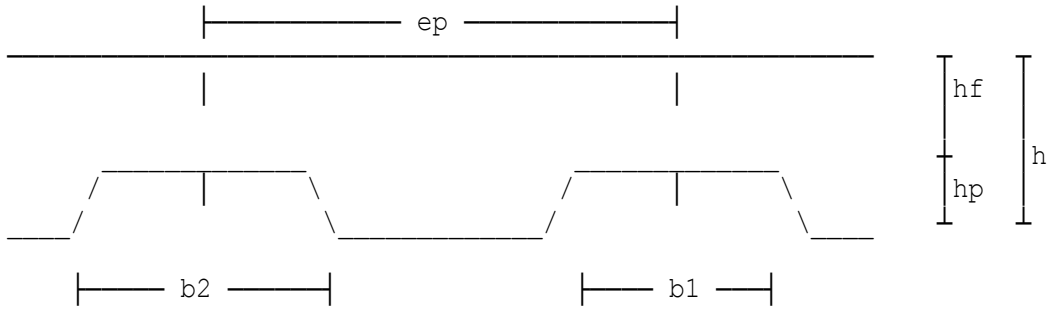

Depth of concrete above profile	hf=80 mm
Depth of profiling	hp=50 mm
Centres of profiles	ep=300 mm
Width at inside of profile	b1=125 mm
Width at outside of profile	b2=175 mm
Thickness of sheeting	tp=1.2 mm
Mean width of concrete ribs	b0=150 mm
Weight of steel decking	fsd=0.12 kN/m²
Variable load (const.stage)	fc=0.5 kN/m²
Variable load (final stage)	fi=3 kN/m²

Partition load	fp=1 kN/m²
Ceiling and services	fcs=0.25 kN/m²
Raised floor	fr=0 kN/m²
Wall or other UDL (final stage)	fw=0 kN/m
Char yield strength of reinft.	fyk=500 N/mm²

DESIGN SUMMARY	**356 x 127 x 39 UKB Grade**	**S 355**
CONSTRUCTION	**Steel yield strength**	**355 N/mm²**
STAGE	**Concrete strength**	**25 N/mm²**
	Maximum moment	**116 kNm**
	Moment resistance	**234 kNm**
	Unity factor	**0.497 ≤ 1**
	Maximum shear force	**51.7 kN**
	Shear resistance	**527 kN**
	Unity factor	**0.098 ≤ 1**
	Deflection to span ratio	
	(G + Q)	**1: 253**
DESIGN SUMMARY	**Effective width**	**2.25 m**
FINAL STAGE	**Stud shear resistance**	**65.8 kN**
	Number of studs per rib	**1 No.**
	Number of 19 mm studs	**30 No.**
	Stud spacing	**300 mm**
	Design compressive force:	
	Concrete	**1768 kN**
	Studs	**986 kN**
	Shear connection ratio	**0.558**
	Partial shear connection	**provided**
	Maximum moment	**277 kNm**
	Moment resistance	**392 kNm**
	Unity factor bending	**0.707 ≤ 1**
	Maximum shear force	**123 kN**
	Shear plastic resistance	**527 kN**
	Unity factor shear	**0.234 ≤ 1**
	Deflection to span ratio	
	at final stage (G + Q)	**1: 202**
	Slab shear stress	**1.37 N/mm²**
	Slab resistance	**2.37 N/mm²**
	Min transverse reinft.	**160 mm²/m**
	Lightweight concrete (LWC) assumed	

Location: Example 5

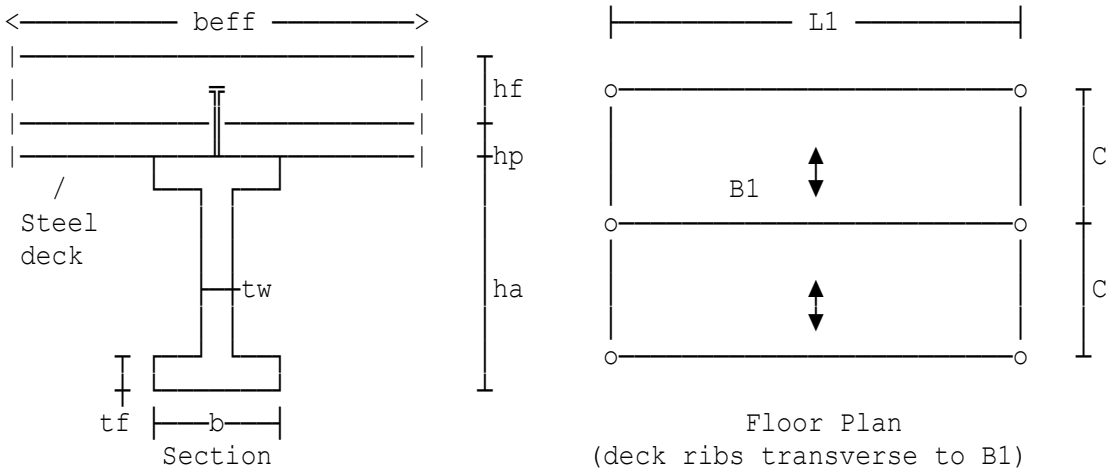

Beam span	L1=7.5 m
Beam centres(floor width carried)	C=3 m
Concrete density (const.stage)	D'c=19 kN/m³
Concrete density (final stage)	Dc=18 kN/m³

Deck spans onto supporting beam and restraints compression flange.
254 x 146 x 37 UKB
Dimensions (mm): h=256 b=146.4 tw=6.3 tf=10.9 r=7.6
Properties (cm): Iy=5540 Iz=571 Wply=483 Wplz=119 It=15.3

Partial safety factor (reinfnt.)	gams=1.15
Partial safety factor (concrete)	gamc=1.5
Partial safety factor (steel)	gamM0=1.0
Partial safety factor (steel)	gamM1=1.0
Partial safety factor (studs)	gamv=1.25
Permanent load (ULS)	gamG=1.25
Variable load (ULS)	gamQ=1.5

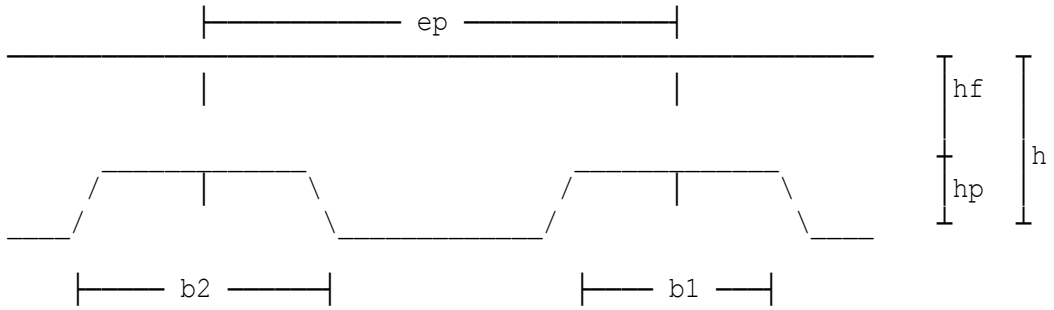

Depth of concrete above profile	hf=72 mm
Depth of profiling	hp=58 mm
Centres of profiles	ep=207 mm
Width at inside of profile	b1=62 mm
Width at outside of profile	b2=101 mm
Thickness of sheeting	tp=0.75 mm
Mean width of concrete ribs	b0=81.5 mm
Weight of steel decking	fsd=0.12 kN/m²
Variable load (const.stage)	fc=0.75 kN/m²
Variable load (final stage)	fi=2.5 kN/m²

Partition load	fp=0.75 kN/m²
Ceiling and services	fcs=0 kN/m²
Raised floor	fr=0 kN/m²
Wall or other UDL (final stage)	fw=0 kN/m
Char yield strength of reinft.	fyk=500 N/mm²

DESIGN SUMMARY	**254 x 146 x 37 UKB Grade**	**S 355**
CONSTRUCTION	**Steel yield strength**	**355 N/mm²**
STAGE	**Concrete strength**	**25 N/mm²**
	Maximum moment	**89.7 kNm**
	Moment resistance	**171 kNm**
	Unity factor	**0.523 ≤ 1**
	Maximum shear force	**47.8 kN**
	Shear resistance	**361 kN**
	Unity factor	**0.132 ≤ 1**
	Deflection to span ratio (G + Q)	**1: 217**
DESIGN SUMMARY	**Effective width**	**1.88 m**
FINAL STAGE	**Stud shear resistance**	**51.7 kN**
	Number of studs per rib	**1 No.**
	Number of 19 mm studs	**36 No.**
	Stud spacing	**207 mm**
	Design compressive force:	
	Concrete	**1676 kN**
	Studs	**931 kN**
	Shear connection ratio	**0.556**
	Partial shear connection	**provided**
	Maximum moment	**169 kNm**
	Moment resistance	**297 kNm**
	Unity factor bending	**0.568 ≤ 1**
	Maximum shear force	**90 kN**
	Shear plastic resistance	**361 kN**
	Unity factor shear	**0.249 ≤ 1**
	Deflection to span ratio at final stage (G + Q)	**1: 211**
	Slab shear stress	**1.72 N/mm²**
	Slab resistance	**2.51 N/mm²**
	Min transverse reinft.	**144 mm²/m**
	Lightweight concrete (LWC) assumed	

Location: Example 6 - from SCI design guide P364, page76

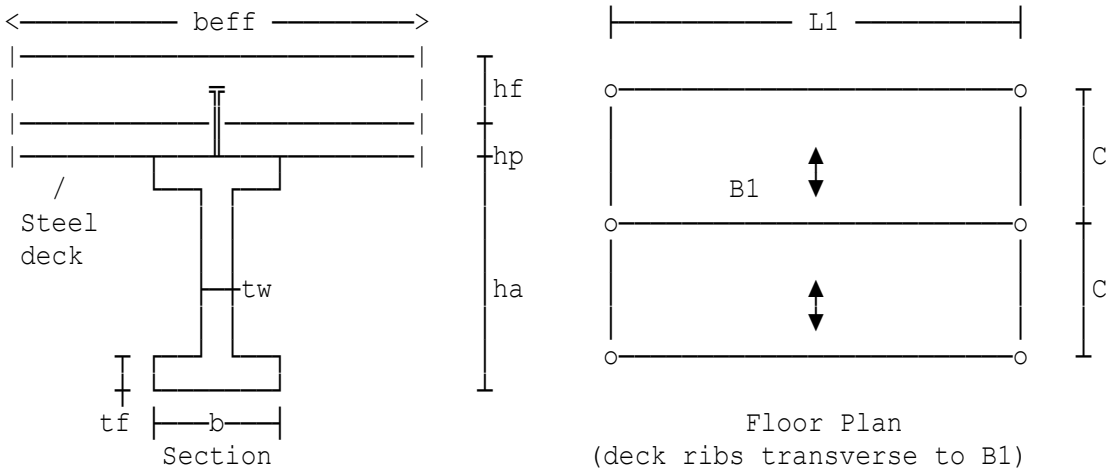

Beam span	L1=12 m
Beam centres(floor width carried)	C=3.5 m
Concrete density (const.stage)	D'c=25 kN/m³
Concrete density (final stage)	Dc=24 kN/m³

Deck spans onto supporting beam and restraints compression flange.
533 x 165 x 75 UKB
Dimensions (mm): h=529.1 b=165.9 tw=9.7 tf=13.6 r=12.7
Properties (cm): Iy=41100 Iz=1040 Wply=1810 Wplz=200 It=47.9

Partial safety factor (reinfnt.)	gams=1.15
Partial safety factor (concrete)	gamc=1.5
Partial safety factor (steel)	gamM0=1.0
Partial safety factor (steel)	gamM1=1.0
Partial safety factor (studs)	gamv=1.25
Permanent load (ULS)	gamG=1.25
Variable load (ULS)	gamQ=1.5

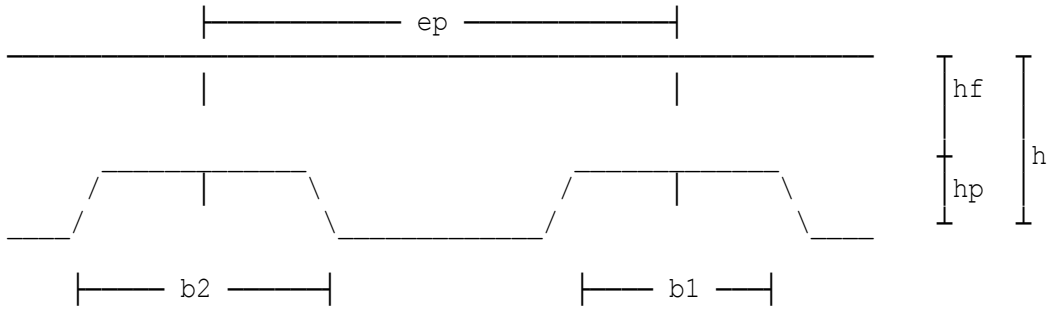

Depth of concrete above profile	hf=70 mm
Depth of profiling	hp=60 mm
Centres of profiles	ep=300 mm
Width at inside of profile	b1=130 mm
Width at outside of profile	b2=170 mm
Thickness of sheeting	tp=0.9 mm
Mean width of concrete ribs	b0=150 mm
Weight of steel decking	fsd=0.1 kN/m²
Variable load (const.stage)	fc=0.75 kN/m²
Variable load (final stage)	fi=2.5 kN/m²

Partition load	fp=0.8 kN/m²
Ceiling and services	fcs=0.5 kN/m²
Raised floor	fr=0 kN/m²
Wall or other UDL (final stage)	fw=0.264 kN/m
Char yield strength of reinft.	fyk=500 N/mm²

DESIGN SUMMARY	**533 x 165 x 75 UKB Grade**	**S 275**
CONSTRUCTION	**Steel yield strength**	**275 N/mm²**
STAGE	**Concrete strength**	**25 N/mm²**
	Maximum moment	**292 kNm**
	Moment resistance	**498 kNm**
	Unity factor	**0.587 ≤ 1**
	Maximum shear force	**97.4 kN**
	Shear resistance	**871 kN**
	Unity factor	**0.112 ≤ 1**
	Deflection to span ratio	
	(G + Q)	**1: 307**
DESIGN SUMMARY	**Effective width**	**3.08 m**
FINAL STAGE	**Stud shear resistance**	**46.8 kN**
	Number of studs per rib	**2 No.**
	Number of 19 mm studs	**80 No.**
	Stud spacing	**300 mm**
	Design compressive force:	
	Concrete	**2618 kN**
	Studs	**1872 kN**
	Shear connection ratio	**0.715**
	Partial shear connection	**provided**
	Maximum moment	**571 kNm**
	Moment resistance	**858 kNm**
	Unity factor bending	**0.665 ≤ 1**
	Maximum shear force	**190 kN**
	Shear plastic resistance	**871 kN**
	Unity factor shear	**0.218 ≤ 1**
	Deflection to span ratio	
	at final stage (G + Q)	**1: 264**
	Slab shear stress	**2.23 N/mm²**
	Slab resistance	**2.72 N/mm²**
	Min transverse reinft.	**179 mm²/m**
	Normal weight concrete (NWC) assumed	

Location: Example 7, Taken from RC Design to EC2 by B Mosley p375

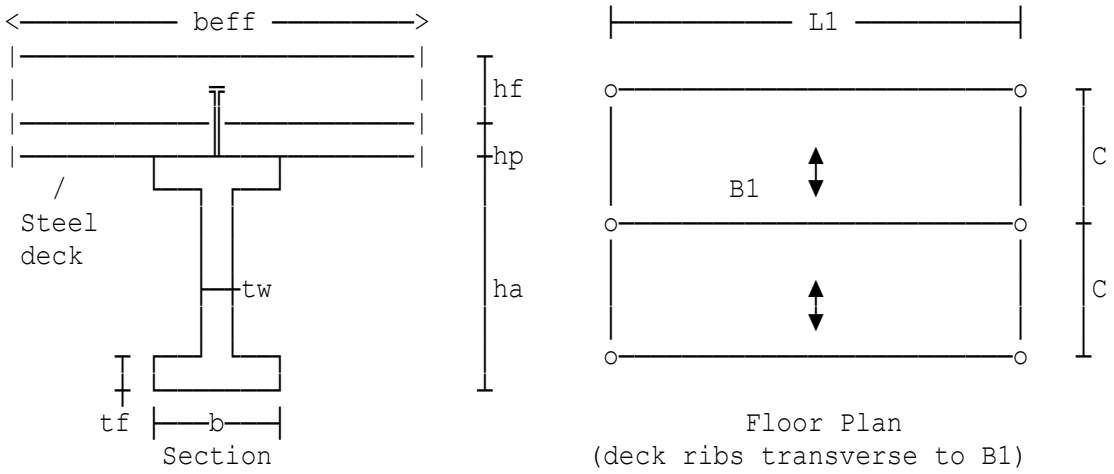

Beam span	L1=6 m
Beam centres(floor width carried)	C=3 m
Concrete density (const.stage)	D'c=25 kN/m³
Concrete density (final stage)	Dc=24 kN/m³

Deck spans onto supporting beam and restraints compression flange.
457 x 191 x 74 UKB
Dimensions (mm): h=457 b=190.4 tw=9 tf=14.5 r=10.2
Properties (cm): Iy=33300 Iz=1670 Wply=1650 Wplz=272 It=51.8

Partial safety factor (reinfnt.)	gams=1.15
Partial safety factor (concrete)	gamc=1.5
Partial safety factor (steel)	gamM0=1.0
Partial safety factor (steel)	gamM1=1.0
Partial safety factor (studs)	gamv=1.25
Permanent load (ULS)	gamG=1.35
Variable load (ULS)	gamQ=1.5

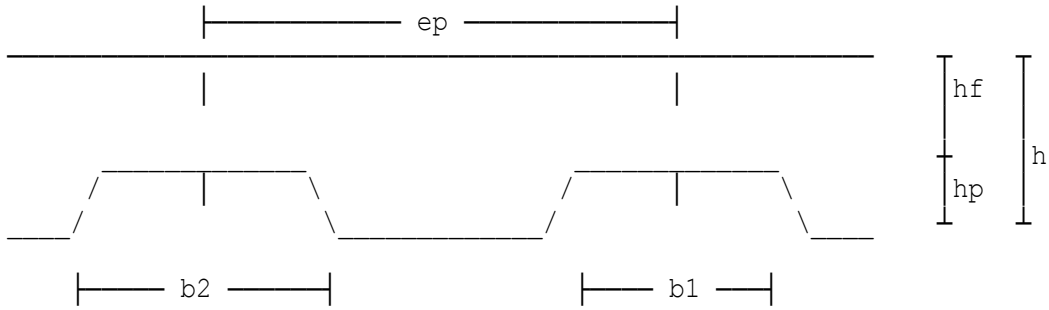

Depth of concrete above profile	hf=90 mm
Depth of profiling	hp=50 mm
Centres of profiles	ep=300 mm
Width at inside of profile	b1=130 mm
Width at outside of profile	b2=170 mm
Thickness of sheeting	tp=0.75 mm
Mean width of concrete ribs	b0=150 mm
Weight of steel decking	fsd=0.15 kN/m²
Variable load (const.stage)	fc=0.75 kN/m²
Variable load (final stage)	fi=5 kN/m²

Partition load	fp=1 kN/m²
Ceiling and services	fcs=0 kN/m²
Raised floor	fr=0 kN/m²
Wall or other UDL (final stage)	fw=0 kN/m
Char yield strength of reinft.	fyk=500 N/mm²

DESIGN SUMMARY	**457 x 191 x 74 UKB Grade**	**S 355**
CONSTRUCTION	**Steel yield strength**	**355 N/mm²**
STAGE	**Concrete strength**	**25 N/mm²**
	Maximum moment	**74.7 kNm**
	Moment resistance	**586 kNm**
	Unity factor	**0.128 ≤ 1**
	Maximum shear force	**49.8 kN**
	Shear resistance	**895 kN**
	Unity factor	**0.056 ≤ 1**
	Deflection to span ratio	
	(G + Q)	**1: 2063**
DESIGN SUMMARY	**Effective width**	**1.58 m**
FINAL STAGE	**Stud shear resistance**	**46.8 kN**
	Number of studs per rib	**2 No.**
	Number of 19 mm studs	**40 No.**
	Stud spacing	**300 mm**
	Design compressive force:	
	Concrete	**1913 kN**
	Studs	**936 kN**
	Shear connection ratio	**0.489**
	Partial shear connection	**provided**
	Maximum moment	**179 kNm**
	Moment resistance	**821 kNm**
	Unity factor bending	**0.218 ≤ 1**
	Maximum shear force	**119 kN**
	Shear plastic resistance	**895 kN**
	Unity factor shear	**0.133 ≤ 1**
	Deflection to span ratio	
	at final stage (G + Q)	**1: 1485**
	Slab shear stress	**1.73 N/mm²**
	Slab resistance	**2.72 N/mm²**
	Min transverse reinft.	**180 mm²/m**
	Normal weight concrete (NWC) assumed	

Location: Example 8 - from SCI design guide P359, page 95

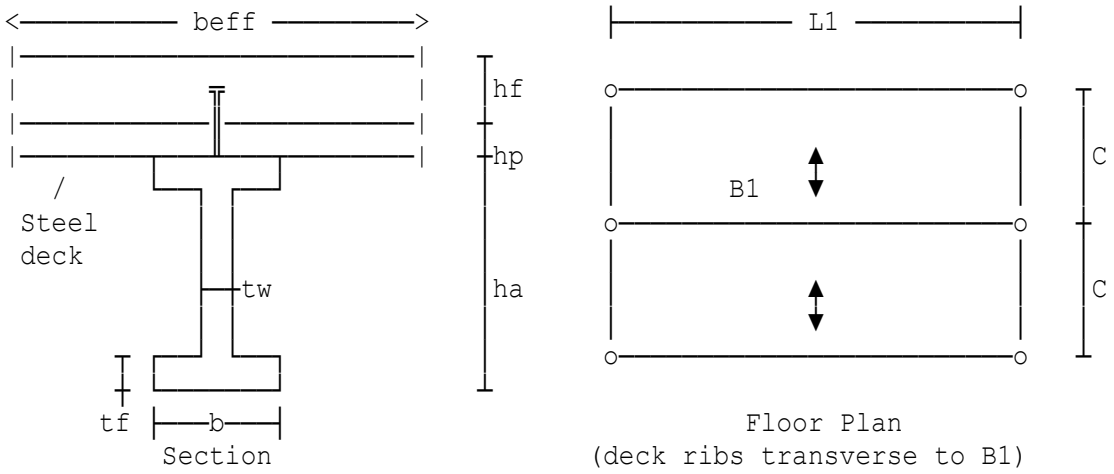

Beam span L1=9 m
Beam centres(floor width carried) C=3 m
Concrete density (const.stage) D'c=25 kN/m³
Concrete density (final stage) Dc=24 kN/m³
Deck spans onto supporting beam and restraints compression flange.
406 x 140 x 46 UKB
Dimensions (mm): h=403.2 b=142.2 tw=6.8 tf=11.2 r=10.2
Properties (cm): Iy=15700 Iz=538 Wply=888 Wplz=118 It=19
Partial safety factor (reinfnt.) gams=1.15
Partial safety factor (concrete) gamc=1.5
Partial safety factor (steel) gamM0=1.0
Partial safety factor (steel) gamM1=1.0
Partial safety factor (studs) gamv=1.25
Permanent load (ULS) gamG=1.25
Variable load (ULS) gamQ=1.5

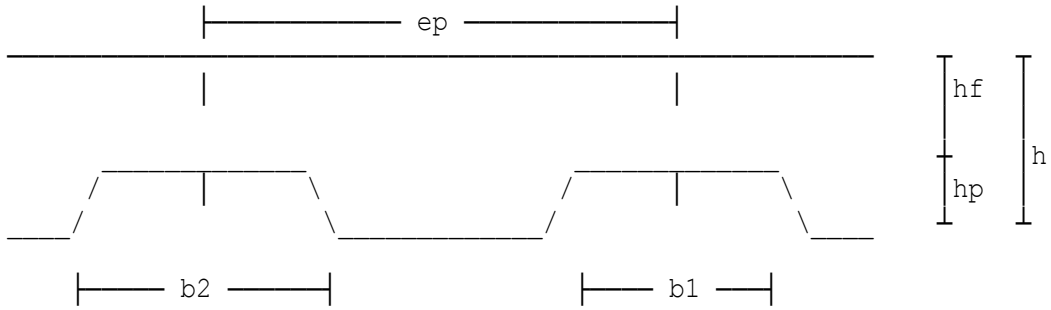

Depth of concrete above profile hf=70 mm
Depth of profiling hp=60 mm
Centres of profiles ep=300 mm
Width at inside of profile b1=120 mm
Width at outside of profile b2=180 mm
Thickness of sheeting tp=1 mm
Mean width of concrete ribs b0=150 mm
Weight of steel decking fsd=0.1 kN/m²
Variable load (const.stage) fc=0.75 kN/m²
Variable load (final stage) fi=4 kN/m²

Partition load	fp=0.8 kN/m²
Ceiling and services	fcs=0.5 kN/m²
Raised floor	fr=0.35 kN/m²
Wall or other UDL (final stage)	fw=0.54 kN/m
Char yield strength of reinft.	fyk=500 N/mm²

DESIGN SUMMARY	**406 x 140 x 46 UKB Grade**	**S 275**
CONSTRUCTION	**Steel yield strength**	**275 N/mm²**
STAGE	**Concrete strength**	**25 N/mm²**
	Maximum moment	**158 kNm**
	Moment resistance	**244 kNm**
	Unity factor	**0.648 ≤ 1**
	Maximum shear force	**70.4 kN**
	Shear resistance	**473 kN**
	Unity factor	**0.149 ≤ 1**
	Deflection to span ratio	
	(G + Q)	**1: 330**
DESIGN SUMMARY	**Effective width**	**2.25 m**
FINAL STAGE	**Stud shear resistance**	**63.1 kN**
	Number of studs per rib	**1 No.**
	Number of 19 mm studs	**30 No.**
	Stud spacing	**300 mm**
	Design compressive force:	
	Concrete	**1612 kN**
	Studs	**947 kN**
	Shear connection ratio	**0.588**
	Partial shear connection	**provided**
	Maximum moment	**358 kNm**
	Moment resistance	**408 kNm**
	Unity factor bending	**0.88 ≤ 1**
	Maximum shear force	**159 kN**
	Shear plastic resistance	**473 kN**
	Unity factor shear	**0.337 ≤ 1**
	Deflection to span ratio	
	at final stage (G + Q)	**1: 254**
	Slab shear stress	**1.5 N/mm²**
	Slab resistance	**2.72 N/mm²**
	Min transverse reinft.	**140 mm²/m**
	Normal weight concrete (NWC) assumed	

Location: Example 9 - As Example 1 but using SCI P405 rules

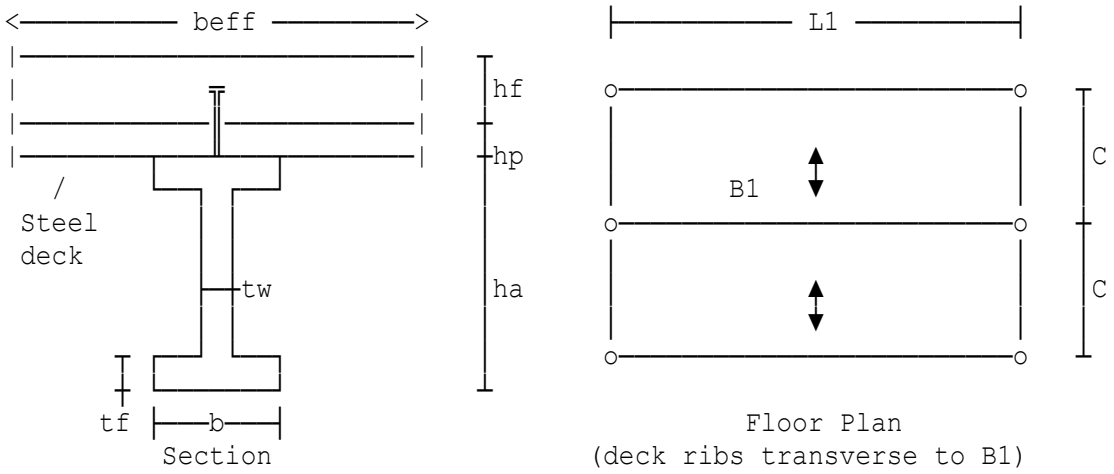

Beam span	L1=9 m
Beam centres(floor width carried)	C=3 m
Concrete density (const.stage)	D'c=19 kN/m³
Concrete density (final stage)	Dc=18 kN/m³

Deck spans onto supporting beam and restraints compression flange.
356 x 171 x 51 UKB
Dimensions (mm): h=355 b=171.5 tw=7.4 tf=11.5 r=10.2
Properties (cm): Iy=14100 Iz=968 Wply=896 Wplz=174 It=23.8

Partial safety factor (reinfnt.)	gams=1.15
Partial safety factor (concrete)	gamc=1.5
Partial safety factor (steel)	gamM0=1.0
Partial safety factor (steel)	gamM1=1.0
Partial safety factor (studs)	gamv=1.25
Permanent load (ULS)	gamG=1.25
Variable load (ULS)	gamQ=1.5

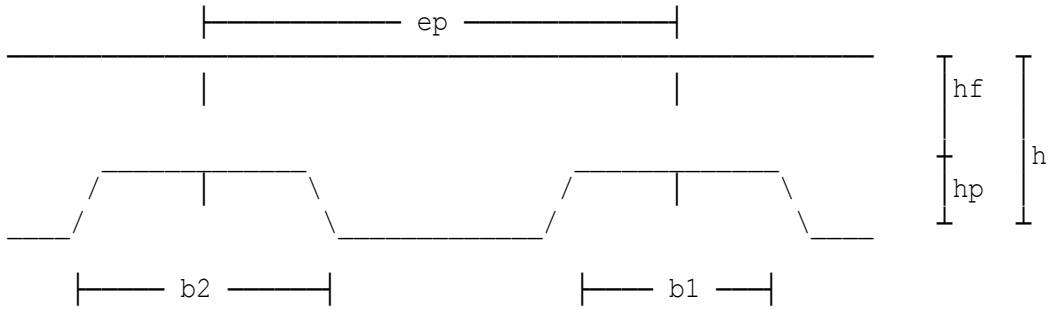

Depth of concrete above profile	hf=80 mm
Depth of profiling	hp=50 mm
Centres of profiles	ep=206 mm
Width at inside of profile	b1=78 mm
Width at outside of profile	b2=103 mm
Thickness of sheeting	tp=0.75 mm
Mean width of concrete ribs	b0=90.5 mm
Weight of steel decking	fsd=0.12 kN/m²
Variable load (const.stage)	fc=0.75 kN/m²
Variable load (final stage)	fi=3 kN/m²

Partition load	fp=1 kN/m²
Ceiling and services	fcs=0.25 kN/m²
Raised floor	fr=0 kN/m²
Wall or other UDL (final stage)	fw=0 kN/m
Char yield strength of reinft.	fyk=500 N/mm²

DESIGN SUMMARY	**356 x 171 x 51 UKB Grade**	**S 355**
CONSTRUCTION	**Steel yield strength**	**355 N/mm²**
STAGE	**Concrete strength**	**25 N/mm²**
	Maximum moment	**132 kNm**
	Moment resistance	**318 kNm**
	Unity factor	**0.414 ≤ 1**
	Maximum shear force	**58.5 kN**
	Shear resistance	**587 kN**
	Unity factor	**0.1 ≤ 1**
	Deflection to span ratio	
	(G + Q)	**1: 313**
DESIGN SUMMARY	**Effective width**	**2.25 m**
FINAL STAGE	**Stud shear resistance**	**61.7 kN**
	Number of studs per rib	**1 No.**
	Number of 19 mm studs	**43 No.**
	Stud spacing	**206 mm**
	Design compressive force:	
	Concrete	**2304 kN**
	Studs	**1327 kN**
	Shear connection ratio	**0.576**
	Partial shear connection	**provided**
	Maximum moment	**289 kNm**
	Moment resistance	**519 kNm**
	Unity factor bending	**0.557 ≤ 1**
	Maximum shear force	**129 kN**
	Shear plastic resistance	**587 kN**
	Unity factor shear	**0.219 ≤ 1**
	Deflection to span ratio	
	at final stage (G + Q)	**1: 268**
	Slab shear stress	**1.84 N/mm²**
	Slab resistance	**2.51 N/mm²**
	Min transverse reinft.	**169 mm²/m**
	Lightweight concrete (LWC) assumed	

Location: Beam on grid line A3

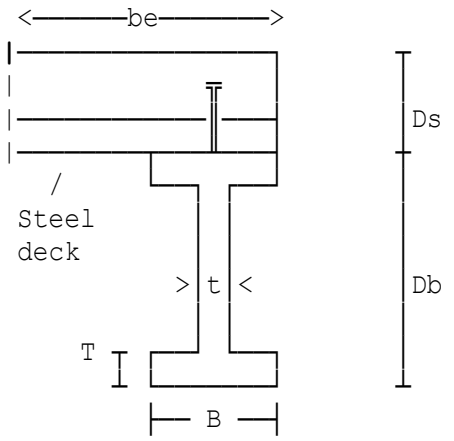

Composite steel deck floor

Edge beam with U.D.Loading

Calculations in accordance with BS 5950 Part 3 Section 3.1 'Code of practice for design of simple and continuous composite beams'- July 1990 and with BS 5950-1: 2000 for construction stage design.

Deck ribs transverse to beam.

Beam span	L1=9 m
Beam centres	C=3 m
Concrete cube strength	fcu=25 N/mm²
Air dry density for concrete	Dc=17.6 kN/m³
Freshwet density for concrete	D'c=18.8 kN/m³
Deck spans onto supporting beam.	
305 x 102 x 33 UB.	
Young's Modulus	E=205 kN/mm²
Slab depth	Ds=115 mm
Depth of profiling	Dp=50 mm
Centres of profiles	Ct=300 mm
Width at inside of profile	b=125 mm
Width at outside of profile	p=175 mm
Profiled steel deck	decwt=0.12 kN/m²
Reinforcement allowance	reinwt=0.04 kN/m²
Steel beam allowance	selfwt=0.15 kN/m²
Construction load allowance	wc=0.5 kN/m²
Other UDL on beam	w'du=0 kN/m
Ceiling and services	wcs=0.25 kN/m²
Imposed	wi=3 kN/m²
Partitions	wp=1 kN/m²
Wall or other UDL	wdu=0 kN/m

Number of studs across flange nr=1
Spacing of connectors spac1=400 mm

Check on transverse reinforcement omitted.

COMPOSITE SECTION SUMMARY	**305 x 102 x 33 UB Grade S 355 with 24 No. 19 dia. stud connectors @ 375 centres. Section is satisfactory for construction, composite, elastic, plastic, moment, shear, deflection and natural frequency requirements.**
	Construction stage moment 54.718 kNm
	Steel beam mom. capacity 170.76 kNm
	Const. stage deflection 19.253 mm
	Composite stage moment 142.79 kNm
	Ultimate mom. capacity 297.92 kNm
	Vertical shear force 63.461 kN
	Ult. shear capacity 439.59 kN
	Composite stage deflection 14.665 mm

Location: long span with solid slab

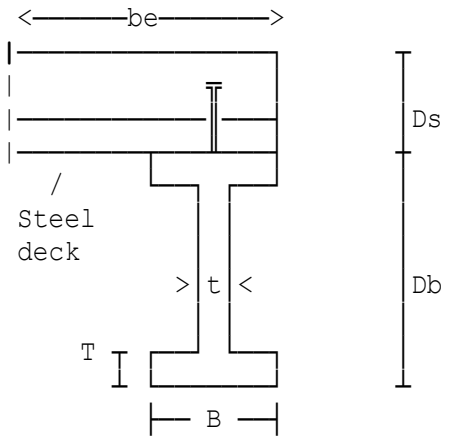

Composite steel deck floor

Edge beam with U.D.Loading

Calculations in accordance with BS 5950 Part 3 Section 3.1 'Code of practice for design of simple and continuous composite beams'- July 1990 and with BS 5950-1: 2000 for construction stage design.

Deck ribs transverse to beam.

Beam span	L1=15 m
Beam centres	C=3 m
Concrete cube strength	fcu=25 N/mm²
Air dry density for concrete	Dc=17.6 kN/m³
Freshwet density for concrete	D'c=18.8 kN/m³
610 x 305 x 149 UB.	
Young's Modulus	E=205 kN/mm²
Slab depth	Ds=150 mm
Profiled steel deck	decwt=0.12 kN/m²
Reinforcement allowance	reinwt=0.04 kN/m²
Steel beam allowance	selfwt=0.55 kN/m²
Construction load allowance	wc=0.5 kN/m²
Other UDL on beam	w'du=0 kN/m
Ceiling and services	wcs=0.25 kN/m²
Imposed	wi=3 kN/m²
Partitions	wp=1 kN/m²
Wall or other UDL	wdu=0 kN/m
Number of studs across flange	nr=1
Percentage to be provided	per=90 %

Check on transverse reinforcement omitted.

COMPOSITE SECTION SUMMARY	**610 x 305 x 149 UB Grade S 355 with 54 No. 19 dia. stud connectors @ 277 centres. Section is satisfactory for construction, composite, elastic, plastic, moment, shear, deflection and natural frequency requirements.**
	Construction stage moment 242.19 kNm
	Steel beam mom. capacity 1583.6 kNm
	Const. stage deflection 13.509 mm
	Composite stage moment 482.57 kNm
	Ultimate mom. capacity 2090.3 kNm
	Vertical shear force 128.69 kN
	Ult. shear capacity 1495.8 kN
	Composite stage deflection 9.3447 mm

Location: Example 1 with fire resistance - method 1

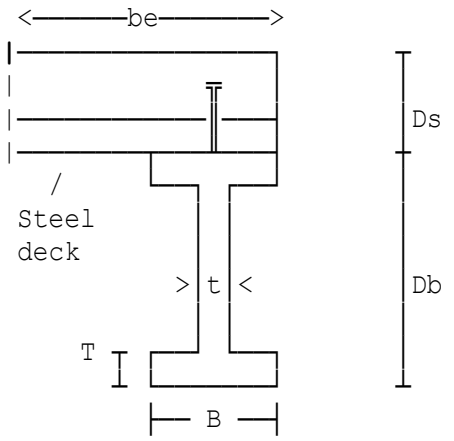

Composite steel deck floor

Edge beam with U.D.Loading

Calculations in accordance with BS 5950 Part 3 Section 3.1 'Code of practice for design of simple and continuous composite beams'- July 1990 and with BS 5950-1: 2000 for construction stage design.

Deck ribs transverse to beam.

Beam span	L1=9 m
Beam centres	C=3 m
Concrete cube strength	fcu=25 N/mm²
Air dry density for concrete	Dc=17.6 kN/m³
Freshwet density for concrete	D'c=18.8 kN/m³
Deck spans onto supporting beam.	
305 x 102 x 33 UB.	
Young's Modulus	E=205 kN/mm²
Slab depth	Ds=115 mm
Depth of profiling	Dp=50 mm
Centres of profiles	Ct=300 mm
Width at inside of profile	b=125 mm
Width at outside of profile	p=175 mm
Profiled steel deck	decwt=0.12 kN/m²
Reinforcement allowance	reinwt=0.04 kN/m²
Steel beam allowance	selfwt=0.15 kN/m²
Construction load allowance	wc=0.5 kN/m²
Other UDL on beam	w'du=0 kN/m
Ceiling and services	wcs=0.25 kN/m²
Imposed	wi=3 kN/m²
Partitions	wp=1 kN/m²
Wall or other UDL	wdu=0 kN/m

Number of studs across flange nr=1
Spacing of connectors spac1=400 mm

Check on transverse reinforcement omitted.

Total permanent load Vfp=40.5 kN

COMPOSITE SECTION SUMMARY	**305 x 102 x 33 UB Grade S 355 with 24 No. 19 dia. stud connectors @ 375 centres. Section is satisfactory for construction, composite, elastic, plastic, moment, shear, deflection and natural frequency requirements.**
	Construction stage moment 54.718 kNm
	Steel beam mom. capacity 170.76 kNm
	Const. stage deflection 19.253 mm
	Composite stage moment 142.79 kNm
	Ultimate mom. capacity 297.92 kNm
	Vertical shear force 63.461 kN
	Ult. shear capacity 439.59 kN
	Composite stage deflection 14.665 mm
FIRE RESISTANCE SUMMARY	**Exposed surface area 919.4 mm²**
	Area of section 41.8 cm²
	Section factor 215 /m
	Load Ratio (R) 0.30302
	Section does not have an inherent fire resistance of 30 minutes. Fire protection should be provided

Location: Example 1 with fire resistance - method 2

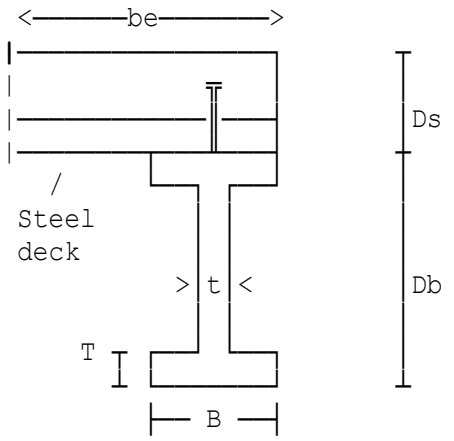

Composite steel deck floor

Edge beam with U.D.Loading

Calculations in accordance with BS 5950 Part 3 Section 3.1 'Code of practice for design of simple and continuous composite beams'- July 1990 and with BS 5950-1: 2000 for construction stage design.

Deck ribs transverse to beam.

Beam span	L1=9 m
Beam centres	C=3 m
Concrete cube strength	fcu=25 N/mm²
Air dry density for concrete	Dc=17.6 kN/m³
Freshwet density for concrete	D'c=18.8 kN/m³
Deck spans onto supporting beam.	
305 x 102 x 33 UB.	
Young's Modulus	E=205 kN/mm²
Slab depth	Ds=115 mm
Depth of profiling	Dp=50 mm
Centres of profiles	Ct=300 mm
Width at inside of profile	b=125 mm
Width at outside of profile	p=175 mm
Profiled steel deck	decwt=0.12 kN/m²
Reinforcement allowance	reinwt=0.04 kN/m²
Steel beam allowance	selfwt=0.15 kN/m²
Construction load allowance	wc=0.5 kN/m²
Other UDL on beam	w'du=0 kN/m
Ceiling and services	wcs=0.25 kN/m²
Imposed	wi=3 kN/m²
Partitions	wp=1 kN/m²
Wall or other UDL	wdu=0 kN/m

Number of studs across flange nr=1
Spacing of connectors spac1=400 mm

Check on transverse reinforcement omitted.

Total permanent load Vfp=40.5 kN

COMPOSITE SECTION SUMMARY	**305 x 102 x 33 UB Grade S 355 with 24 No. 19 dia. stud connectors @ 375 centres. Section is satisfactory for construction, composite, elastic, plastic, moment, shear, deflection and natural frequency requirements.**
	Construction stage moment 54.718 kNm
	Steel beam mom. capacity 170.76 kNm
	Const. stage deflection 19.253 mm
	Composite stage moment 142.79 kNm
	Ultimate mom. capacity 297.92 kNm
	Vertical shear force 63.461 kN
	Ult. shear capacity 439.59 kN
	Composite stage deflection 14.665 mm
FIRE RESISTANCE SUMMARY	**Exposed surface area 919.4 mm²**
	Area of section 41.8 cm²
	Section factor 215 /m
	Section does not have an inherent fire resistance of 30 minutes. Fire protection should be provided

Location: Ex1 - Edge beam with UDL

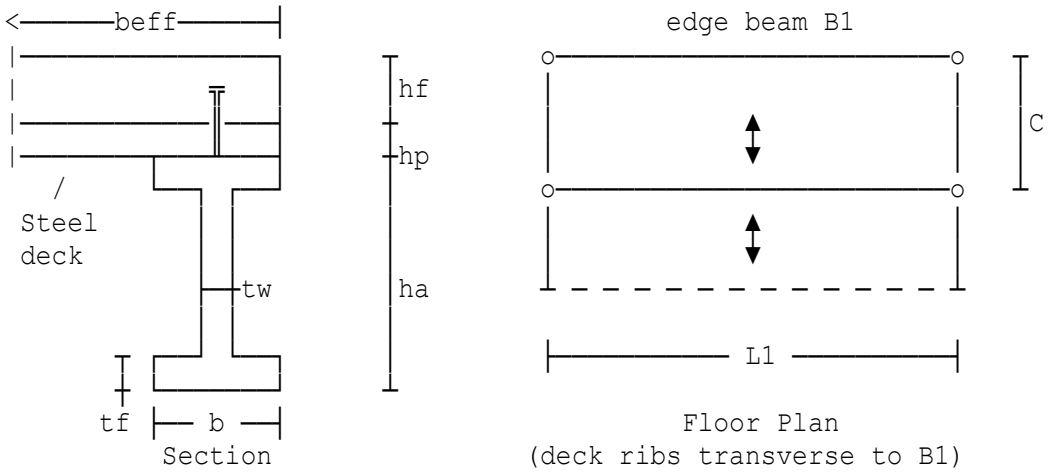

Beam span	L1=9 m
Beam centres	C=3 m
Concrete density (const.stage)	D'c=19 kN/m³
Concrete density (final stage)	Dc=18 kN/m³

Deck spans onto supporting beam and restraints compression flange.
305 x 165 x 46 UKB
Dimensions (mm): h=306.6 b=165.7 tw=6.7 tf=11.8 r=8.9
Properties (cm): Iy=9900 Iz=896 Wply=720 Wplz=166 It=22.2

Partial safety factor (reinfnt.)	gams=1.15
Partial safety factor (concrete)	gamc=1.5
Partial safety factor (steel)	gamM0=1.0
Partial safety factor (steel)	gamM1=1.0
Partial safety factor (studs)	gamv=1.25
Permanent load (ULS)	gamG=1.25
Variable load (ULS)	gamQ=1.5

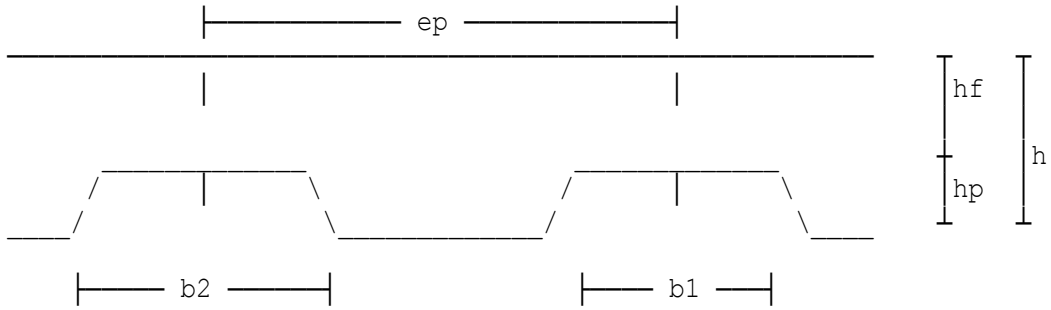

Depth of concrete above profile	hf=100 mm
Depth of profiling	hp=50 mm
Centres of profiles	ep=300 mm
Width at inside of profile	b1=125 mm
Width at outside of profile	b2=175 mm
Thickness of sheeting	tp=1.2 mm
Mean width of concrete ribs	b0=150 mm
Weight of steel decking	fsd=0.12 kN/m²
Variable load (const.stage)	fc=0.75 kN/m²
Variable load (final stage)	fi=3 kN/m²

Partition load	fp=1 kN/m²
Ceiling and services	fcs=0.25 kN/m²
Raised floor	fr=0 kN/m²
Wall or other UDL (final stage)	fw=0 kN/m
Char yield strength of reinft.	fyk=500 N/mm²
Area of reinfnt.per shear plane	Ae=345 mm²/m

DESIGN SUMMARY	**305 x 165 x 46 UKB Grade**	**S 355**
CONSTRUCTION	**Steel yield strength**	**355 N/mm²**
STAGE	**Concrete strength**	**25 N/mm²**
	Maximum moment	**75.1 kNm**
	Moment resistance	**256 kNm**
	Unity factor	**0.294 ≤ 1**
	Maximum shear force	**33.4 kN**
	Shear resistance	**461 kN**
	Unity factor	**0.072 ≤ 1**
	Deflection to span ratio	
	(G + Q)	**1: 383**
DESIGN SUMMARY	**Effective width**	**1.12 m**
FINAL STAGE	**Stud shear resistance**	**72.6 kN**
	Number of studs per rib	**1 No.**
	Number of 19 mm studs	**30 No.**
	Stud spacing	**300 mm**
	Design compressive force:	
	Concrete	**1594 kN**
	Studs	**1090 kN**
	Shear connection ratio	**0.684**
	Partial shear connection	**provided**
	Maximum moment	**154 kNm**
	Moment resistance	**421 kNm**
	Unity factor bending	**0.366 ≤ 1**
	Maximum shear force	**68.4 kN**
	Shear plastic resistance	**461 kN**
	Unity factor shear	**0.148 ≤ 1**
	Deflection to span ratio	
	at final stage (G + Q)	**1: 335**
	Slab shear force	**242 kN/m**
	Slab resistance	**242 kN/m**
	Min transverse reinft.	**345 mm²/m**
	Lightweight concrete (LWC) assumed	

Location: Ex2 - Solid slab

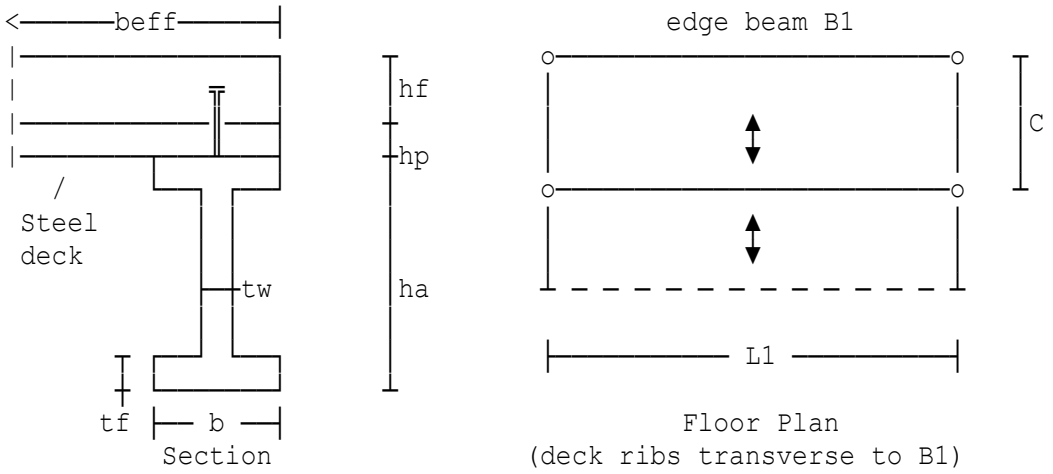

Beam span	L1=15 m
Beam centres	C=3 m
Concrete density (const.stage)	D'c=18.8 kN/m³
Concrete density (final stage)	Dc=17.6 kN/m³

610 x 305 x 149 UKB
Dimensions (mm): h=612.4 b=304.8 tw=11.8 tf=19.7 r=16.5
Properties (cm): Iy=126000 Iz=9310 Wply=4590 Wplz=937 It=200

Partial safety factor (reinfnt.)	gams=1.15
Partial safety factor (concrete)	gamc=1.5
Partial safety factor (steel)	gamM0=1.0
Partial safety factor (steel)	gamM1=1.0
Partial safety factor (studs)	gamv=1.25
Permanent load (ULS)	gamG=1.25
Variable load (ULS)	gamQ=1.5
Variable load (const.stage)	fc=0.5 kN/m²
Variable load (final stage)	fi=3 kN/m²
Partition load	fp=1 kN/m²
Ceiling and services	fcs=0.25 kN/m²
Raised floor	fr=0 kN/m²
Wall or other UDL (final stage)	fw=0 kN/m
Stud spacing	spac=300 mm
Char yield strength of reinft.	fyk=500 N/mm²
Governing shear length	hf=150 mm
Area of reinfnt.per shear plane	Ae=768 mm²/m

DESIGN SUMMARY	**610 x 305 x 149 UKB Grade S 355**	
CONSTRUCTION	**Steel yield strength**	**345 N/mm²**
STAGE	**Concrete strength**	**25 N/mm²**
	Maximum moment	**250 kNm**
	Moment resistance	**1584 kNm**
	Unity factor	**0.158 ≤ 1**
	Maximum shear force	**66.6 kN**
	Shear resistance	**1568 kN**
	Unity factor	**0.042 ≤ 1**
	Deflection to span ratio	
	(G + Q)	**1: 865**
DESIGN SUMMARY	**Effective width**	**1.54 m**
FINAL STAGE	**Stud shear resistance**	**65.8 kN**
	Studs across flange	**in pairs**
	Number of 19 mm studs	**100 No.**
	Stud spacing	**300 mm**
	Design compressive force:	
	Concrete	**3188 kN**
	Studs	**3188 kN**
	Shear connection ratio	**1**
	Full shear connection provided	
	Maximum moment	**469 kNm**
	Moment resistance	**2196 kNm**
	Unity factor bending	**0.213 ≤ 1**
	Maximum shear force	**125 kN**
	Shear plastic resistance	**1568 kN**
	Unity factor shear	**0.08 ≤ 1**
	Deflection to span ratio	
	at final stage (G + Q)	**1: 633**
	Slab shear force	**438 kN/m**
	Slab resistance	**439 kN/m**
	Min transverse reinft.	**768 mm²/m**
	Lightweight concrete (LWC) assumed	

Location: Ex3

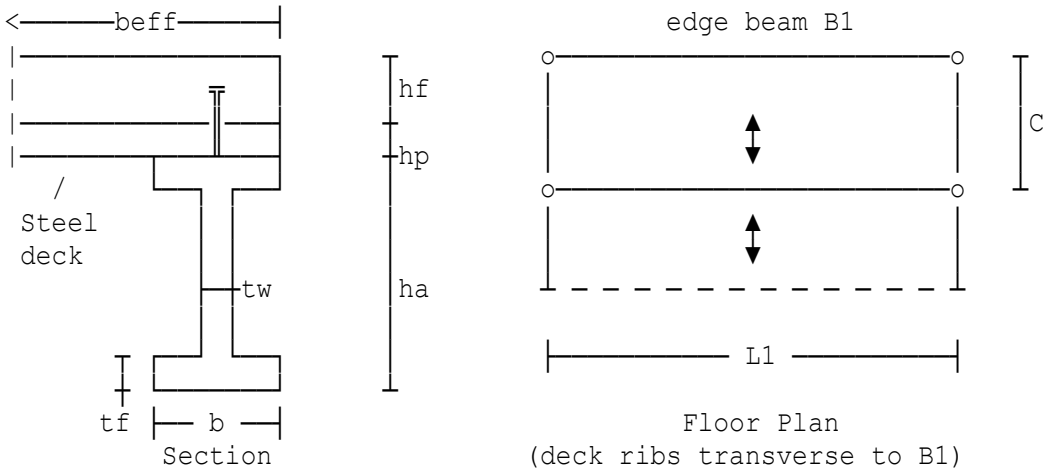

Beam span	L1=9 m
Beam centres	C=3 m
Concrete density (const.stage)	D'c=18.8 kN/m³
Concrete density (final stage)	Dc=17.6 kN/m³

Deck spans onto supporting beam and restraints compression flange.
356 x 127 x 33 UKB
Dimensions (mm): h=349 b=125.4 tw=6 tf=8.5 r=10.2
Properties (cm): Iy=8250 Iz=280 Wply=543 Wplz=70.3 It=8.79

Partial safety factor (reinfnt.)	gams=1.15
Partial safety factor (concrete)	gamc=1.5
Partial safety factor (steel)	gamM0=1.0
Partial safety factor (steel)	gamM1=1.0
Partial safety factor (studs)	gamv=1.25
Permanent load (ULS)	gamG=1.25
Variable load (ULS)	gamQ=1.5

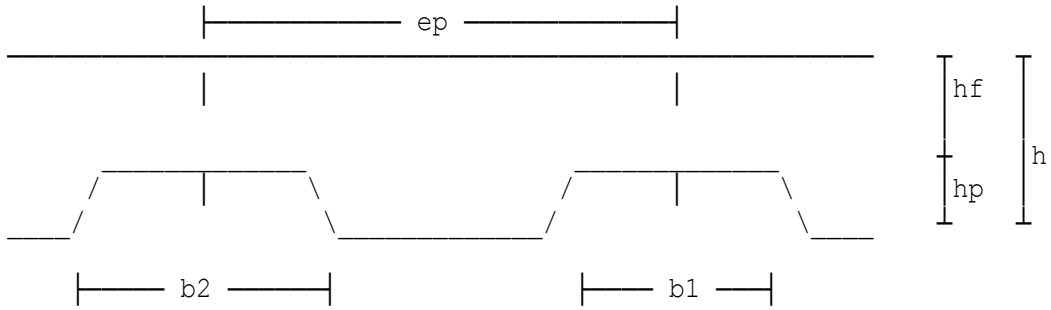

Depth of concrete above profile	hf=100 mm
Depth of profiling	hp=50 mm
Centres of profiles	ep=300 mm
Width at inside of profile	b1=125 mm
Width at outside of profile	b2=175 mm
Thickness of sheeting	tp=1.2 mm
Mean width of concrete ribs	b0=150 mm
Weight of steel decking	fsd=0.12 kN/m²
Variable load (const.stage)	fc=0.5 kN/m²
Variable load (final stage)	fi=3 kN/m²

Partition load	fp=1 kN/m²
Ceiling and services	fcs=0.25 kN/m²
Raised floor	fr=0 kN/m²
Wall or other UDL (final stage)	fw=0 kN/m
Char yield strength of reinft.	fyk=500 N/mm²
Area of reinfnt.per shear plane	Ae=304 mm²/m
Design temperature for 30 minutes	temp=791.5 °C

Load factor for permanent loads	gamGf=1
Load factor for variable loads	gamQf=1

DESIGN SUMMARY	**356 x 127 x 33 UKB Grade**	**S 355**
CONSTRUCTION	**Steel yield strength**	**355 N/mm²**
STAGE	**Concrete strength**	**25 N/mm²**
	Maximum moment	**67.8 kNm**
	Moment resistance	**193 kNm**
	Unity factor	**0.352 ≤ 1**
	Maximum shear force	**30.2 kN**
	Shear resistance	**472 kN**
	Unity factor	**0.064 ≤ 1**
	Deflection to span ratio	
	(G + Q)	**1: 350**
DESIGN SUMMARY	**Effective width**	**1.12 m**
FINAL STAGE	**Stud shear resistance**	**65.8 kN**
	Number of studs per rib	**1 No.**
	Number of 19 mm studs	**30 No.**
	Stud spacing	**300 mm**
	Design compressive force:	
	Concrete	**1495 kN**
	Studs	**986 kN**
	Shear connection ratio	**0.66**
	Partial shear connection	**provided**
	Maximum moment	**148 kNm**
	Moment resistance	**353 kNm**
	Unity factor bending	**0.418 ≤ 1**
	Maximum shear force	**65.6 kN**
	Shear plastic resistance	**472 kN**
	Unity factor shear	**0.139 ≤ 1**
	Deflection to span ratio	
	at final stage (G + Q)	**1: 288**
	Slab shear force	**219 kN/m**
	Slab resistance	**219 kN/m**
	Min transverse reinft.	**304 mm²/m**
	Lightweight concrete (LWC) assumed	

The steel beam does not have an inherent fire resistance of 30 minutes and therefore fire protection should be provided.

Location: Ex4

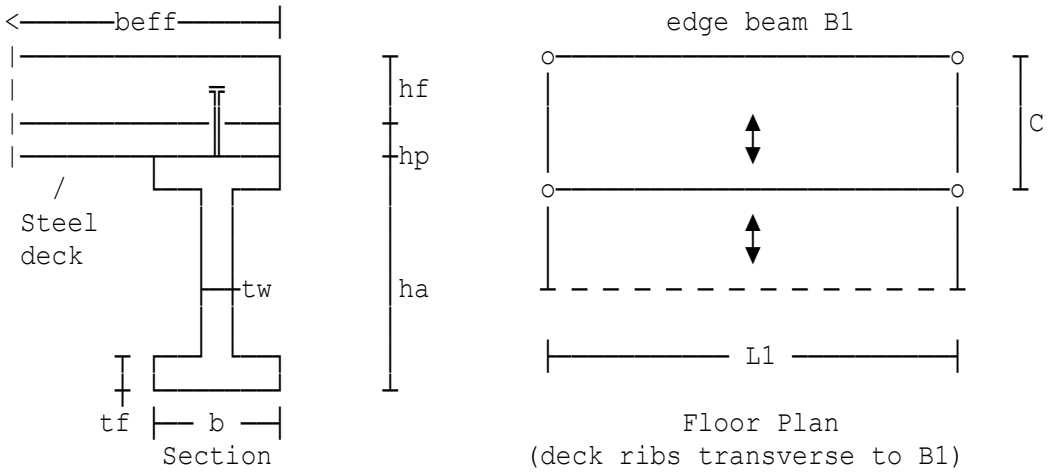

Beam span	L1=9 m
Beam centres	C=3 m
Concrete density (const.stage)	D'c=18.8 kN/m³
Concrete density (final stage)	Dc=17.6 kN/m³

Deck spans onto supporting beam and restraints compression flange.
356 x 127 x 33 UKB
Dimensions (mm): h=349 b=125.4 tw=6 tf=8.5 r=10.2
Properties (cm): Iy=8250 Iz=280 Wply=543 Wplz=70.3 It=8.79

Partial safety factor (reinfnt.)	gams=1.15
Partial safety factor (concrete)	gamc=1.5
Partial safety factor (steel)	gamM0=1.0
Partial safety factor (steel)	gamM1=1.0
Partial safety factor (studs)	gamv=1.25
Permanent load (ULS)	gamG=1.25
Variable load (ULS)	gamQ=1.5

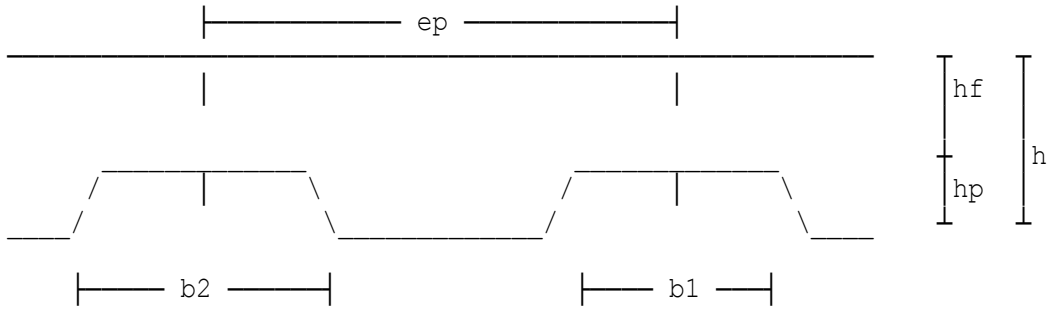

Depth of concrete above profile	hf=100 mm
Depth of profiling	hp=50 mm
Centres of profiles	ep=300 mm
Width at inside of profile	b1=125 mm
Width at outside of profile	b2=175 mm
Thickness of sheeting	tp=1.2 mm
Mean width of concrete ribs	b0=150 mm
Weight of steel decking	fsd=0.12 kN/m²
Variable load (const.stage)	fc=0.5 kN/m²
Variable load (final stage)	fi=3 kN/m²

Partition load	fp=1 kN/m²
Ceiling and services	fcs=0.25 kN/m²
Raised floor	fr=0 kN/m²
Wall or other UDL (final stage)	fw=0 kN/m
Char yield strength of reinft.	fyk=500 N/mm²
Area of reinfnt.per shear plane	Ae=304 mm²/m

DESIGN SUMMARY	**356 x 127 x 33 UKB Grade**	**S 355**
CONSTRUCTION	**Steel yield strength**	**355 N/mm²**
STAGE	**Concrete strength**	**25 N/mm²**
	Maximum moment	**67.8 kNm**
	Moment resistance	**193 kNm**
	Unity factor	**0.352 ≤ 1**
	Maximum shear force	**30.2 kN**
	Shear resistance	**472 kN**
	Unity factor	**0.064 ≤ 1**
	Deflection to span ratio	
	(G + Q)	**1: 350**
DESIGN SUMMARY	**Effective width**	**1.12 m**
FINAL STAGE	**Stud shear resistance**	**65.8 kN**
	Number of studs per rib	**1 No.**
	Number of 19 mm studs	**30 No.**
	Stud spacing	**300 mm**
	Design compressive force:	
	Concrete	**1495 kN**
	Studs	**986 kN**
	Shear connection ratio	**0.66**
	Partial shear connection	**provided**
	Maximum moment	**148 kNm**
	Moment resistance	**353 kNm**
	Unity factor bending	**0.418 ≤ 1**
	Maximum shear force	**65.6 kN**
	Shear plastic resistance	**472 kN**
	Unity factor shear	**0.139 ≤ 1**
	Deflection to span ratio	
	at final stage (G + Q)	**1: 288**
	Slab shear force	**219 kN/m**
	Slab resistance	**219 kN/m**
	Min transverse reinft.	**304 mm²/m**
	Lightweight concrete (LWC) assumed	

Location: Ex5 - Edge beam with UDL

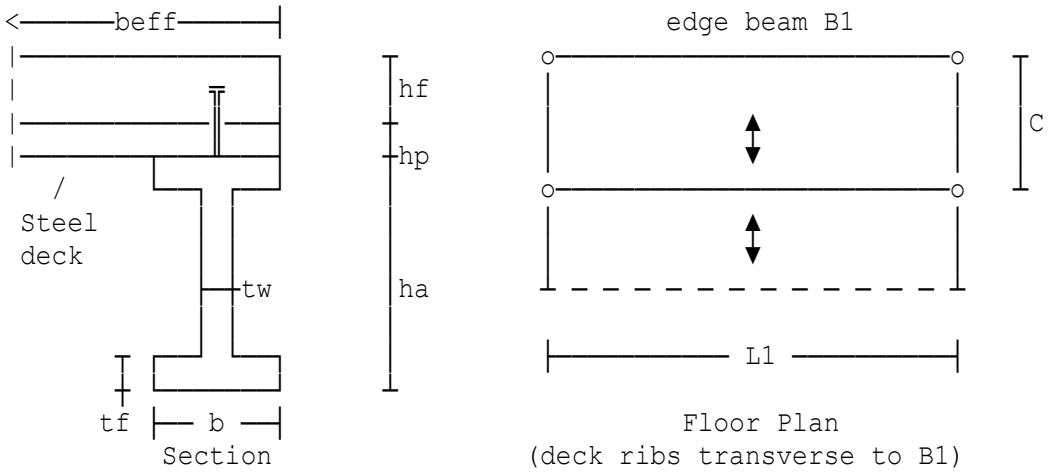

Beam span	L1=9 m
Beam centres	C=3 m
Concrete density (const.stage)	D'c=19 kN/m³
Concrete density (final stage)	Dc=18 kN/m³

Deck spans onto supporting beam and restraints compression flange.
305 x 165 x 46 UKB
Dimensions (mm): h=306.6 b=165.7 tw=6.7 tf=11.8 r=8.9
Properties (cm): Iy=9900 Iz=896 Wply=720 Wplz=166 It=22.2

Partial safety factor (reinfnt.)	gams=1.15
Partial safety factor (concrete)	gamc=1.5
Partial safety factor (steel)	gamM0=1.0
Partial safety factor (steel)	gamM1=1.0
Partial safety factor (studs)	gamv=1.25
Permanent load (ULS)	gamG=1.25
Variable load (ULS)	gamQ=1.5

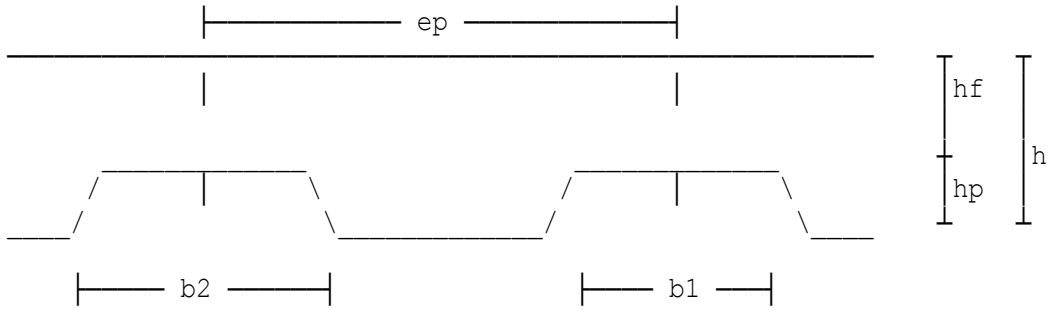

Depth of concrete above profile	hf=100 mm
Depth of profiling	hp=50 mm
Centres of profiles	ep=300 mm
Width at inside of profile	b1=125 mm
Width at outside of profile	b2=175 mm
Thickness of sheeting	tp=1.2 mm
Mean width of concrete ribs	b0=150 mm
Weight of steel decking	fsd=0.12 kN/m²
Variable load (const.stage)	fc=0.75 kN/m²
Variable load (final stage)	fi=3 kN/m²

Partition load	fp=1 kN/m²
Ceiling and services	fcs=0.25 kN/m²
Raised floor	fr=0 kN/m²
Wall or other UDL (final stage)	fw=0 kN/m
Char yield strength of reinft.	fyk=500 N/mm²
Area of reinfnt.per shear plane	Ae=345 mm²/m

DESIGN SUMMARY	**305 x 165 x 46 UKB Grade**	**S 355**
CONSTRUCTION	**Steel yield strength**	**355 N/mm²**
STAGE	**Concrete strength**	**25 N/mm²**
	Maximum moment	**75.1 kNm**
	Moment resistance	**256 kNm**
	Unity factor	**0.294 ≤ 1**
	Maximum shear force	**33.4 kN**
	Shear resistance	**461 kN**
	Unity factor	**0.072 ≤ 1**
	Deflection to span ratio	
	(G + Q)	**1: 383**
DESIGN SUMMARY	**Effective width**	**1.12 m**
FINAL STAGE	**Stud shear resistance**	**72.6 kN**
	Number of studs per rib	**1 No.**
	Number of 19 mm studs	**30 No.**
	Stud spacing	**300 mm**
	Design compressive force:	
	Concrete	**1594 kN**
	Studs	**1090 kN**
	Shear connection ratio	**0.684**
	Partial shear connection	**provided**
	Maximum moment	**154 kNm**
	Moment resistance	**421 kNm**
	Unity factor bending	**0.366 ≤ 1**
	Maximum shear force	**68.4 kN**
	Shear plastic resistance	**461 kN**
	Unity factor shear	**0.148 ≤ 1**
	Deflection to span ratio	
	at final stage (G + Q)	**1: 335**
	Slab shear force	**242 kN/m**
	Slab resistance	**242 kN/m**
	Min transverse reinft.	**345 mm²/m**
	Lightweight concrete (LWC) assumed	

Location: Beam on grid line A3

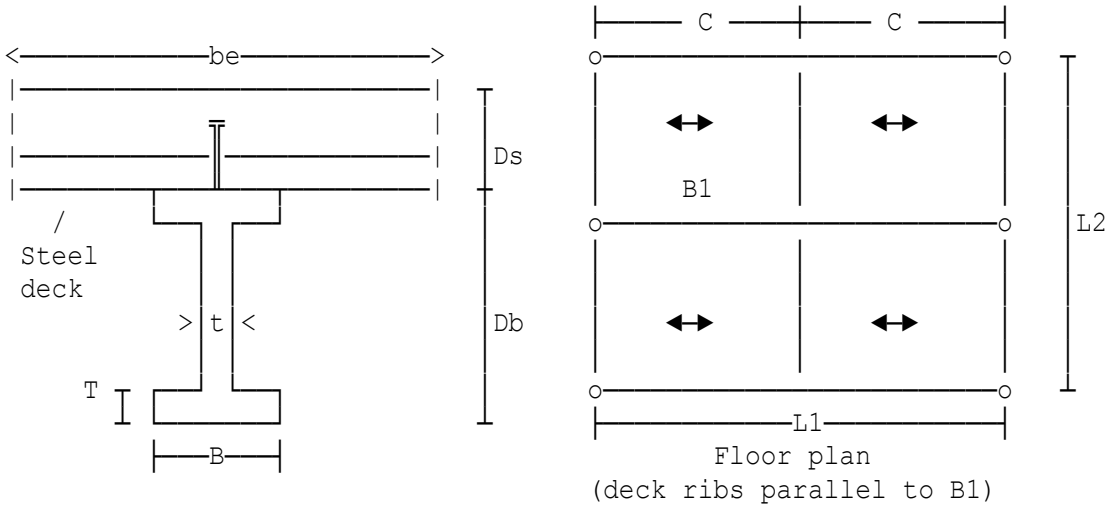

Beam span	L1=6 m
Sum of secondary beam spans	L2=15 m
Concrete cube strength	fcu=25 N/mm²
Air dry density for concrete	Dc=17.6 kN/m³
Freshwet density for concrete	D'c=18.8 kN/m³

Deck is parallel to supporting beam.
305 x 165 x 46 UB.

Young's Modulus	E=205 kN/mm²
Slab depth	Ds=115 mm
Depth of profiling	Dp=50 mm
Centres of profiles	Ct=300 mm
Width at inside of profile	b=125 mm
Width at outside of profile	p=175 mm
Profiled steel deck	decwt=0.12 kN/m²
Reinforcement allowance	reinwt=0.04 kN/m²
Steel beam allowance	selfwt=0.15 kN/m²
Construction load allowance	wc=0.5 kN/m²
Other UDL on beam	w'du=0.5 kN/m
Ceiling and services	wcs=0.25 kN/m²
Imposed	wi=3 kN/m²
Partitions	wp=1 kN/m²
Wall or other UDL	wdu=0.5 kN/m

Number of studs across flange nr=1
Spacing of connectors spac1=225 mm

Check on transverse reinforcement omitted.

COMPOSITE SECTION SUMMARY	**305 x 165 x 46 UB Grade S 355 with 28 No. 19 dia. stud connectors @ 214 centres. Section is satisfactory for construction, composite, elastic, plastic, moment, shear, deflection and natural frequency requirements.**
Construction stage moment	**124.74 kNm**
Steel beam mom. capacity	**255.6 kNm**
Const. stage deflection	**10.653 mm**
Composite stage moment	**320.45 kNm**
Ultimate mom. capacity	**397.02 kNm**
Vertical shear force	**107.87 kN**
Ult. shear capacity	**437.55 kN**
Composite stage deflection	**8.7003 mm**

Location: long span with solid slab

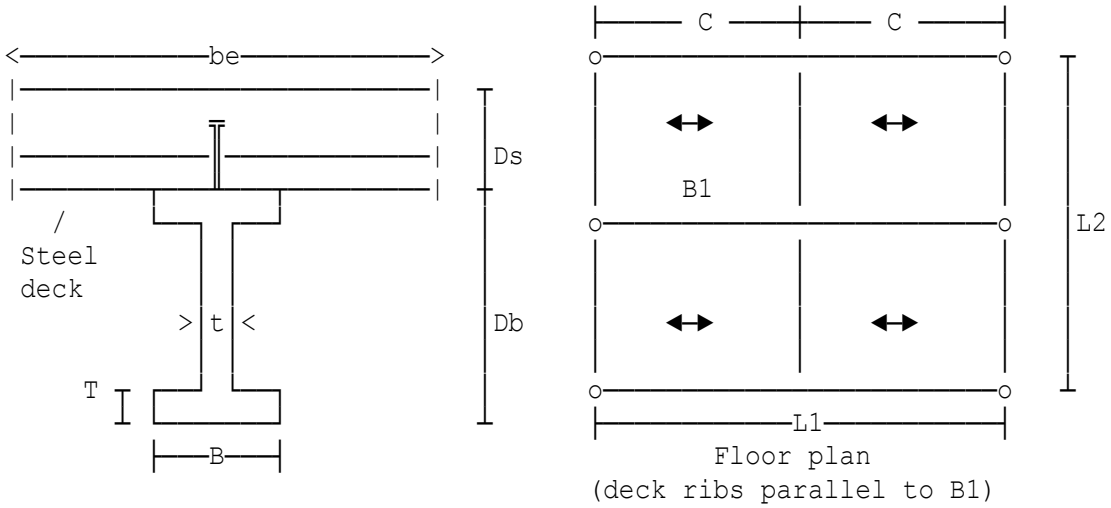

Beam span	L1=15 m
Sum of secondary beam spans	L2=15 m
Concrete cube strength	fcu=25 N/mm²
Air dry density for concrete	Dc=17.6 kN/m³
Freshwet density for concrete	D'c=18.8 kN/m³
762 x 267 x 173 UB.	
Young's Modulus	E=205 kN/mm²
Slab depth	Ds=150 mm
Profiled steel deck	decwt=0.12 kN/m²
Reinforcement allowance	reinwt=0.04 kN/m²
Steel beam allowance	selfwt=0.9 kN/m²
Construction load allowance	wc=0.5 kN/m²
Other UDL on beam	w'du=0 kN/m
Ceiling and services	wcs=0.25 kN/m²
Imposed	wi=3 kN/m²
Partitions	wp=1 kN/m²
Wall or other UDL	wdu=0 kN/m

Number of studs across flange nr=2
Percentage to be provided per=90 %

Check on transverse reinforcement omitted.

COMPOSITE SECTION SUMMARY	**762 x 267 x 173 UB Grade S 355 with 172 No. 19 dia. stud connectors @ 174 centres. Studs to be grouped in 2 's. Section is satisfactory for construction, composite, elastic, plastic, moment, shear, deflection and natural frequency requirements.**
	Construction stage moment 1314.3 kNm
	Steel beam mom. capacity 2139 kNm
	Const. stage deflection 36.507 mm
	Composite stage moment 2516.2 kNm
	Ultimate mom. capacity 3356.9 kNm
	Vertical shear force 335.5 kN
	Ult. shear capacity 2256.2 kN
	Composite stage deflection 17.462 mm

Location: Example 1 with fire resistance - method 1

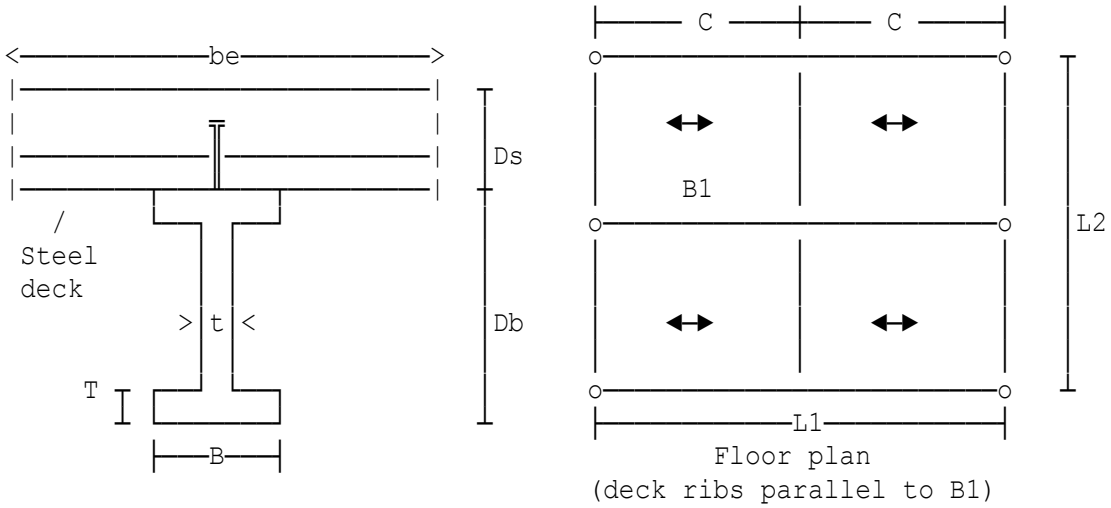

Beam span	L1=6 m
Sum of secondary beam spans	L2=15 m
Concrete cube strength	fcu=25 N/mm²
Air dry density for concrete	Dc=17.6 kN/m³
Freshwet density for concrete	D'c=18.8 kN/m³

Deck is parallel to supporting beam.
305 x 165 x 46 UB.

Young's Modulus	E=205 kN/mm²
Slab depth	Ds=115 mm
Depth of profiling	Dp=50 mm
Centres of profiles	Ct=300 mm
Width at inside of profile	b=125 mm
Width at outside of profile	p=175 mm
Profiled steel deck	decwt=0.12 kN/m²
Reinforcement allowance	reinwt=0.04 kN/m²
Steel beam allowance	selfwt=0.15 kN/m²
Construction load allowance	wc=0.5 kN/m²
Other UDL on beam	w'du=0.5 kN/m
Ceiling and services	wcs=0.25 kN/m²
Imposed	wi=3 kN/m²
Partitions	wp=1 kN/m²
Wall or other UDL	wdu=0.5 kN/m

Number of studs across flange nr=1
Spacing of connectors spac1=225 mm

Check on transverse reinforcement omitted.

Total permanent load Vfp=67.5 kN

COMPOSITE SECTION SUMMARY	**305 x 165 x 46 UB Grade S 355 with 28 No. 19 dia. stud connectors @ 214 centres. Section is satisfactory for construction, composite, elastic, plastic, moment, shear, deflection and natural frequency requirements.**	
	Construction stage moment	**124.74 kNm**
	Steel beam mom. capacity	**255.6 kNm**
	Const. stage deflection	**10.653 mm**
	Composite stage moment	**320.45 kNm**
	Ultimate mom. capacity	**397.02 kNm**
	Vertical shear force	**107.87 kN**
	Ult. shear capacity	**437.55 kN**
	Composite stage deflection	**8.7003 mm**
FIRE RESISTANCE SUMMARY	**Exposed surface area**	**1096.9 mm²**
	Area of section	**58.7 cm²**
	Section factor	**185 /m**
	Load Ratio (R)	**0.51096**
	Section does not have an inherent fire resistance of 30 minutes. Fire protection should be provided	

Location: Example 1 with fire resistance - method 2

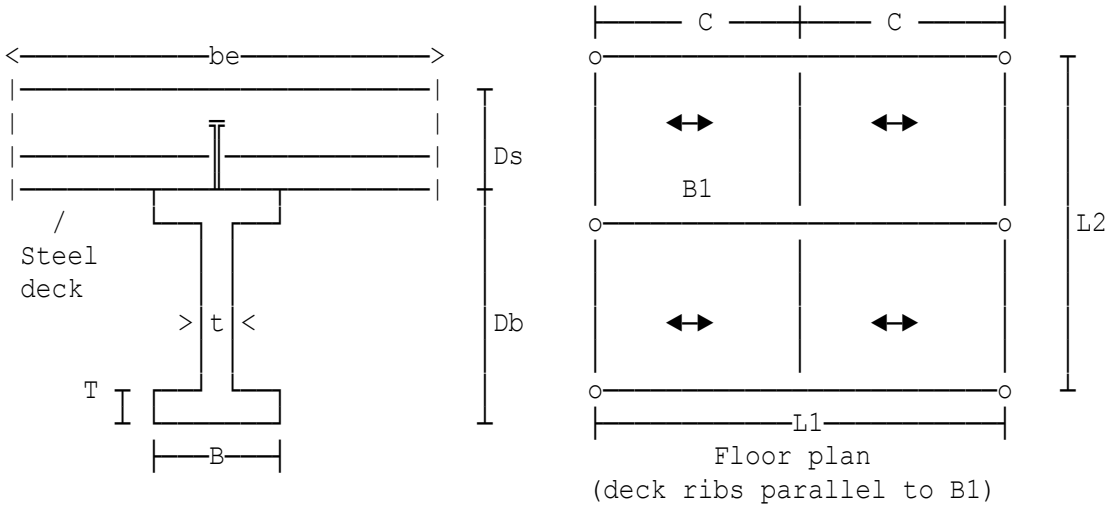

Beam span	L1=6 m
Sum of secondary beam spans	L2=15 m
Concrete cube strength	fcu=25 N/mm²
Air dry density for concrete	Dc=17.6 kN/m³
Freshwet density for concrete	D'c=18.8 kN/m³

Deck is parallel to supporting beam.
305 x 165 x 46 UB.

Young's Modulus	E=205 kN/mm²
Slab depth	Ds=115 mm
Depth of profiling	Dp=50 mm
Centres of profiles	Ct=300 mm
Width at inside of profile	b=125 mm
Width at outside of profile	p=175 mm
Profiled steel deck	decwt=0.12 kN/m²
Reinforcement allowance	reinwt=0.04 kN/m²
Steel beam allowance	selfwt=0.15 kN/m²
Construction load allowance	wc=0.5 kN/m²
Other UDL on beam	w'du=0.5 kN/m
Ceiling and services	wcs=0.25 kN/m²
Imposed	wi=3 kN/m²
Partitions	wp=1 kN/m²
Wall or other UDL	wdu=0.5 kN/m

Number of studs across flange nr=1
Spacing of connectors spac1=225 mm

Check on transverse reinforcement omitted.

Total permanent load Vfp=67.5 kN

COMPOSITE SECTION SUMMARY	**305 x 165 x 46 UB Grade S 355 with 28 No. 19 dia. stud connectors @ 214 centres. Section is satisfactory for construction, composite, elastic, plastic, moment, shear, deflection and natural frequency requirements.**	
	Construction stage moment	**124.74 kNm**
	Steel beam mom. capacity	**255.6 kNm**
	Const. stage deflection	**10.653 mm**
	Composite stage moment	**320.45 kNm**
	Ultimate mom. capacity	**397.02 kNm**
	Vertical shear force	**107.87 kN**
	Ult. shear capacity	**437.55 kN**
	Composite stage deflection	**8.7003 mm**
FIRE RESISTANCE SUMMARY	**Exposed surface area**	**1096.9 mm²**
	Area of section	**58.7 cm²**
	Section factor	**185 /m**
	Section does not have an inherent fire resistance of 30 minutes. Fire protection should be provided	

Location: Ex1 - Internal beam

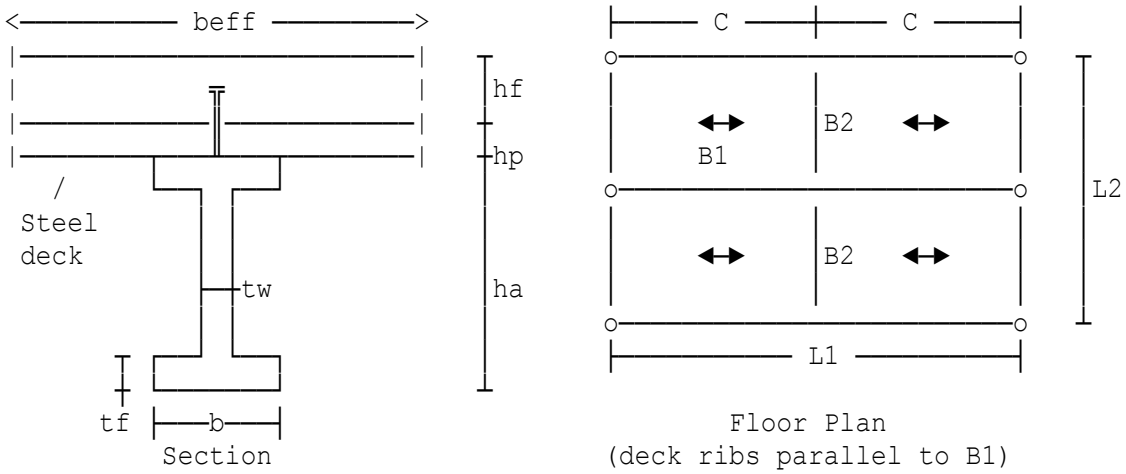

Beam span	L1=6 m
Sum of secondary beam spans	L2=15 m
Concrete density (const.stage)	D'c=19 kN/m³
Concrete density (final stage)	Dc=18 kN/m³

Deck is parallel to supporting beam and supported on secondary beams.
305 x 165 x 46 UKB
Dimensions (mm): h=306.6 b=165.7 tw=6.7 tf=11.8 r=8.9
Properties (cm): Iy=9900 Iz=896 Wply=720 Wplz=166 It=22.2

Partial safety factor (reinfnt.)	gams=1.15
Partial safety factor (concrete)	gamc=1.5
Partial safety factor (steel)	gamM0=1.0
Partial safety factor (steel)	gamM1=1.0
Partial safety factor (studs)	gamv=1.25
Permanent load (ULS)	gamG=1.25
Variable load (ULS)	gamQ=1.5

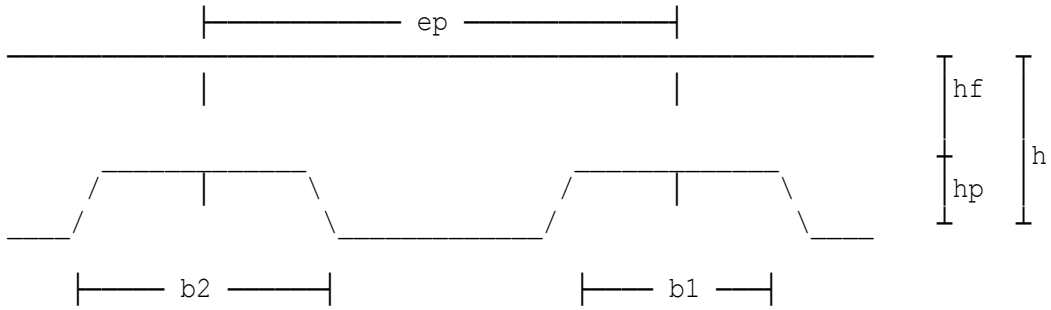

Depth of concrete above profile	hf=80 mm
Depth of profiling	hp=50 mm
Centres of profiles	ep=300 mm
Width at inside of profile	b1=125 mm
Width at outside of profile	b2=175 mm
Thickness of sheeting	tp=1.2 mm
Mean width of concrete ribs	b0=150 mm
Weight of steel decking	fsd=0.12 kN/m²
Variable load (const.stage)	fc=0.75 kN/m²
Variable load (final stage)	fi=3 kN/m²

Partition load	fp=1 kN/m²
Ceiling and services	fcs=0.25 kN/m²
Raised floor	fr=0 kN/m²
Wall or other UDL (final stage)	fw=0 kN/m
Self weight of secondary beam	fb=0.2 kN/m
Char yield strength of reinft.	fyk=500 N/mm²
Area of reinfnt.per shear plane	Ae=174 mm²/m

DESIGN SUMMARY	**305 x 165 x 46 UKB Grade**	**S 355**
CONSTRUCTION	**Steel yield strength**	**355 N/mm²**
STAGE	**Concrete strength**	**25 N/mm²**
	Maximum moment	**142 kNm**
	Moment resistance	**256 kNm**
	Unity factor	**0.555 ≤ 1**
	Maximum shear force	**48.1 kN**
	Shear resistance	**461 kN**
	Unity factor	**0.104 ≤ 1**
	Deflection to span ratio	
	(G + Q)	**1: 381**
DESIGN SUMMARY	**Effective width**	**1.5 m**
FINAL STAGE	**Stud shear resistance**	**72.6 kN**
	Number of studs per rib	**1 No.**
	Number of 19 mm studs	**22 No.**
	Stud spacing	**270 mm**
	Design compressive force:	
	Concrete	**1700 kN**
	Studs	**799 kN**
	Shear connection ratio	**0.47**
	Partial shear connection	**provided**
	Maximum moment	**317 kNm**
	Moment resistance	**381 kNm**
	Unity factor bending	**0.832 ≤ 1**
	Maximum shear force	**106 kN**
	Shear plastic resistance	**461 kN**
	Unity factor shear	**0.231 ≤ 1**
	Deflection to span ratio	
	at final stage (G + Q)	**1: 327**
	Slab shear force	**135 kN/m**
	Slab resistance	**135 kN/m**
	Min transverse reinft.	**174 mm²/m**
	Lightweight concrete (LWC) assumed	

Location: Ex2 - Solid slab

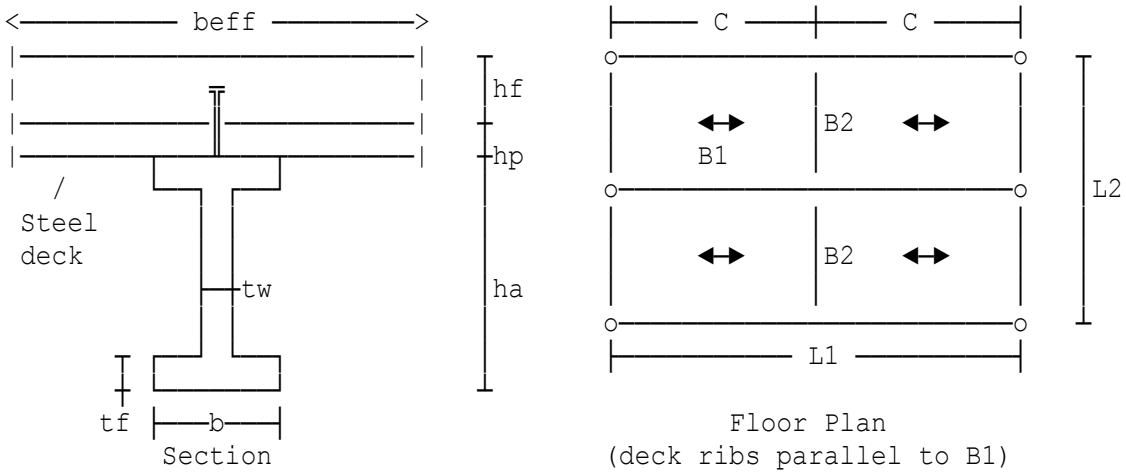

Beam span	L1=15 m
Sum of secondary beam spans	L2=15 m
Concrete density (const.stage)	D'c=19 kN/m³
Concrete density (final stage)	Dc=18 kN/m³

762 x 267 x 173 UKB
Dimensions (mm): h=762.2 b=266.7 tw=14.3 tf=21.6 r=16.5
Properties (cm): Iy=205000 Iz=6850 Wply=6200 Wplz=807 It=267

Partial safety factor (reinfnt.)	gams=1.15
Partial safety factor (concrete)	gamc=1.5
Partial safety factor (steel)	gamM0=1.0
Partial safety factor (steel)	gamM1=1.0
Partial safety factor (studs)	gamv=1.25
Permanent load (ULS)	gamG=1.25
Variable load (ULS)	gamQ=1.5
Variable load (const.stage)	fc=0.5 kN/m²
Variable load (final stage)	fi=3 kN/m²
Partition load	fp=1 kN/m²
Ceiling and services	fcs=0.25 kN/m²
Raised floor	fr=0 kN/m²
Wall or other UDL (final stage)	fw=0 kN/m
Self weight of secondary beam	fb=0.2 kN/m
Char yield strength of reinft.	fyk=500 N/mm²
Governing shear length	hf=114.25 mm
Area of reinfnt.per shear plane	Ae=641 mm²/m

DESIGN SUMMARY	**762 x 267 x 173 UKB Grade S 355**	
CONSTRUCTION	**Steel yield strength**	**345 N/mm²**
STAGE	**Concrete strength**	**25 N/mm²**
	Maximum moment	**1059 kNm**
	Moment resistance	**2139 kNm**
	Unity factor	**0.495 ≤ 1**
	Buckling resistance	**1531 kNm**
	Unity factor	**0.692 ≤ 1**
	Maximum shear force	**149 kN**
	Shear resistance	**2291 kN**
	Unity factor	**0.065 ≤ 1**
	Deflection to span ratio	
	(G + Q)	**1: 410**
DESIGN SUMMARY	**Effective width**	**3.75 m**
FINAL STAGE	**Stud shear resistance**	**72.6 kN**
	Number of 19 mm studs	**146 No.**
	Stud spacing	**100 mm**
	Design compressive force:	
	Concrete	**7590 kN**
	Studs	**5302 kN**
	Shear connection ratio	**0.699**
	Partial shear connection	**provided**
	Maximum moment	**2233 kNm**
	Moment resistance	**3251 kNm**
	Unity factor bending	**0.687 ≤ 1**
	Maximum shear force	**306 kN**
	Shear plastic resistance	**2291 kN**
	Unity factor shear	**0.133 ≤ 1**
	Deflection to span ratio	
	at final stage (G + Q)	**1: 332**
	Slab shear force	**363 kN/m**
	Slab resistance	**363 kN/m**
	Min transverse reinft.	**641 mm²/m**
	Lightweight concrete (LWC) assumed	

Location: Ex3

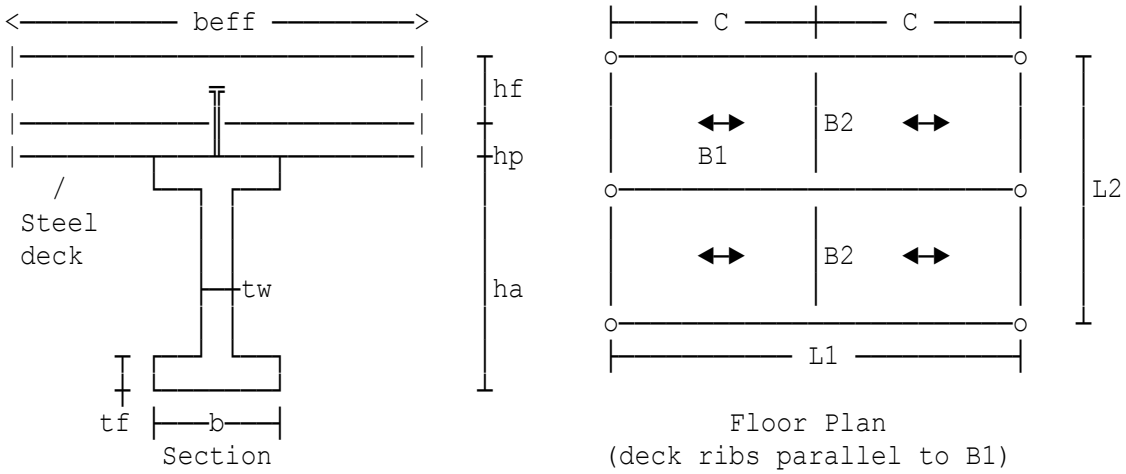

Beam span	L1=6 m
Sum of secondary beam spans	L2=15 m
Concrete density (const.stage)	D'c=19 kN/m³
Concrete density (final stage)	Dc=18 kN/m³

Deck is parallel to supporting beam and supported on secondary beams.
305 x 165 x 46 UKB
Dimensions (mm): h=306.6 b=165.7 tw=6.7 tf=11.8 r=8.9
Properties (cm): Iy=9900 Iz=896 Wply=720 Wplz=166 It=22.2

Partial safety factor (reinfnt.)	gams=1.15
Partial safety factor (concrete)	gamc=1.5
Partial safety factor (steel)	gamM0=1.0
Partial safety factor (steel)	gamM1=1.0
Partial safety factor (studs)	gamv=1.25
Permanent load (ULS)	gamG=1.25
Variable load (ULS)	gamQ=1.5

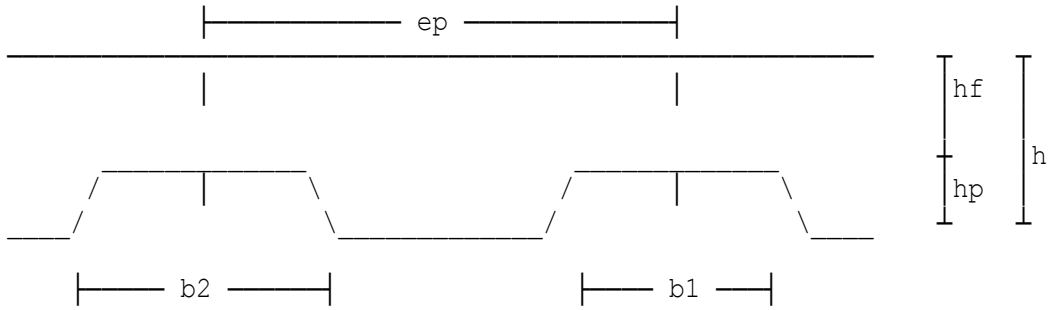

Depth of concrete above profile	hf=80 mm
Depth of profiling	hp=50 mm
Centres of profiles	ep=300 mm
Width at inside of profile	b1=125 mm
Width at outside of profile	b2=175 mm
Thickness of sheeting	tp=1.2 mm
Mean width of concrete ribs	b0=150 mm
Weight of steel decking	fsd=0.12 kN/m²
Variable load (const.stage)	fc=0.5 kN/m²
Variable load (final stage)	fi=3 kN/m²

Partition load	fp=1 kN/m²
Ceiling and services	fcs=0.25 kN/m²
Raised floor	fr=0 kN/m²
Wall or other UDL (final stage)	fw=0 kN/m
Self weight of secondary beam	fb=0.2 kN/m
Char yield strength of reinft.	fyk=500 N/mm²
Area of reinfnt.per shear plane	Ae=174 mm²/m

DESIGN SUMMARY	**305 x 165 x 46 UKB Grade**	**S 355**
CONSTRUCTION	**Steel yield strength**	**355 N/mm²**
STAGE	**Concrete strength**	**25 N/mm²**
	Maximum moment	**129 kNm**
	Moment resistance	**256 kNm**
	Unity factor	**0.505 ≤ 1**
	Maximum shear force	**43.9 kN**
	Shear resistance	**461 kN**
	Unity factor	**0.095 ≤ 1**
	Deflection to span ratio	
	(G + Q)	**1: 413**
DESIGN SUMMARY	**Effective width**	**1.5 m**
FINAL STAGE	**Stud shear resistance**	**72.6 kN**
	Number of studs per rib	**1 No.**
	Number of 19 mm studs	**22 No.**
	Stud spacing	**270 mm**
	Design compressive force:	
	Concrete	**1700 kN**
	Studs	**799 kN**
	Shear connection ratio	**0.47**
	Partial shear connection	**provided**
	Maximum moment	**317 kNm**
	Moment resistance	**381 kNm**
	Unity factor bending	**0.832 ≤ 1**
	Maximum shear force	**106 kN**
	Shear plastic resistance	**461 kN**
	Unity factor shear	**0.231 ≤ 1**
	Deflection to span ratio	
	at final stage (G + Q)	**1: 327**
	Slab shear force	**135 kN/m**
	Slab resistance	**135 kN/m**
	Min transverse reinft.	**174 mm²/m**
	Lightweight concrete (LWC) assumed	

Location: Ex4

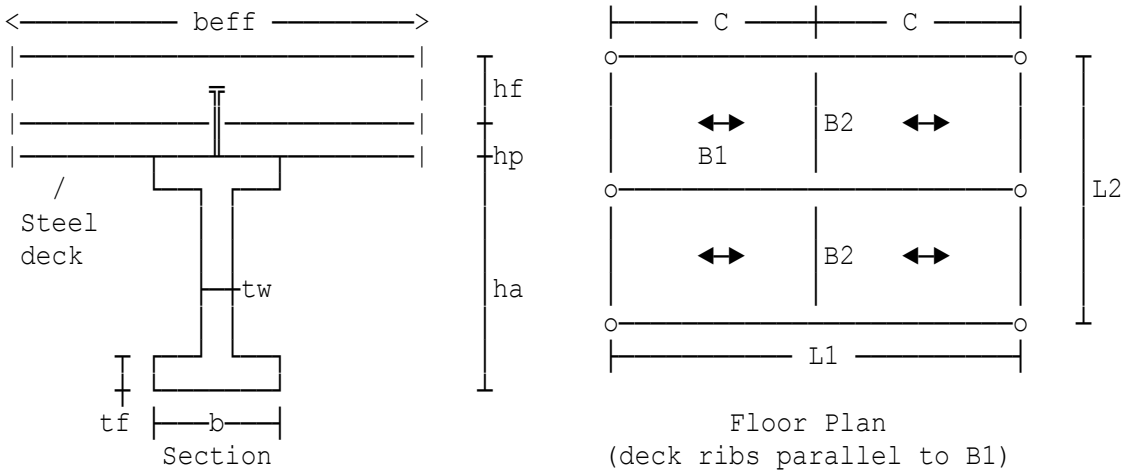

Beam span	L1=6 m
Sum of secondary beam spans	L2=15 m
Concrete density (const.stage)	D'c=19 kN/m³
Concrete density (final stage)	Dc=18 kN/m³

Deck is parallel to supporting beam and supported on secondary beams.
305 x 165 x 46 UKB
Dimensions (mm): h=306.6 b=165.7 tw=6.7 tf=11.8 r=8.9
Properties (cm): Iy=9900 Iz=896 Wply=720 Wplz=166 It=22.2

Partial safety factor (reinfnt.)	gams=1.15
Partial safety factor (concrete)	gamc=1.5
Partial safety factor (steel)	gamM0=1.0
Partial safety factor (steel)	gamM1=1.0
Partial safety factor (studs)	gamv=1.25
Permanent load (ULS)	gamG=1.25
Variable load (ULS)	gamQ=1.5

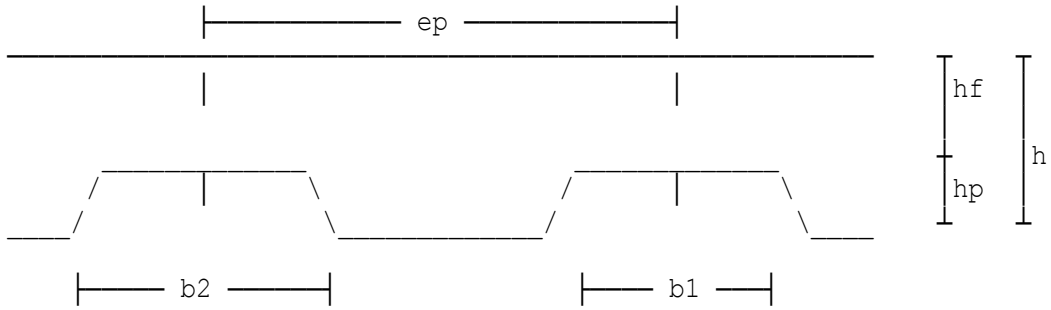

Depth of concrete above profile	hf=80 mm
Depth of profiling	hp=50 mm
Centres of profiles	ep=300 mm
Width at inside of profile	b1=125 mm
Width at outside of profile	b2=175 mm
Thickness of sheeting	tp=1.2 mm
Mean width of concrete ribs	b0=150 mm
Weight of steel decking	fsd=0.12 kN/m²
Variable load (const.stage)	fc=0.5 kN/m²
Variable load (final stage)	fi=3 kN/m²

Partition load	fp=1 kN/m²
Ceiling and services	fcs=0.25 kN/m²
Raised floor	fr=0 kN/m²
Wall or other UDL (final stage)	fw=0 kN/m
Self weight of secondary beam	fb=0.2 kN/m
Char yield strength of reinft.	fyk=500 N/mm²
Area of reinfnt.per shear plane	Ae=174 mm²/m

DESIGN SUMMARY	**305 x 165 x 46 UKB Grade**	**S 355**
CONSTRUCTION	**Steel yield strength**	**355 N/mm²**
STAGE	**Concrete strength**	**25 N/mm²**
	Maximum moment	**129 kNm**
	Moment resistance	**256 kNm**
	Unity factor	**0.505 ≤ 1**
	Maximum shear force	**43.9 kN**
	Shear resistance	**461 kN**
	Unity factor	**0.095 ≤ 1**
	Deflection to span ratio	
	(G + Q)	**1: 413**
DESIGN SUMMARY	**Effective width**	**1.5 m**
FINAL STAGE	**Stud shear resistance**	**72.6 kN**
	Number of studs per rib	**1 No.**
	Number of 19 mm studs	**22 No.**
	Stud spacing	**270 mm**
	Design compressive force:	
	Concrete	**1700 kN**
	Studs	**799 kN**
	Shear connection ratio	**0.47**
	Partial shear connection	**provided**
	Maximum moment	**317 kNm**
	Moment resistance	**381 kNm**
	Unity factor bending	**0.832 ≤ 1**
	Maximum shear force	**106 kN**
	Shear plastic resistance	**461 kN**
	Unity factor shear	**0.231 ≤ 1**
	Deflection to span ratio	
	at final stage (G + Q)	**1: 327**
	Slab shear force	**135 kN/m**
	Slab resistance	**135 kN/m**
	Min transverse reinft.	**174 mm²/m**
	Lightweight concrete (LWC) assumed	

Location: Ex5 - Internal beam

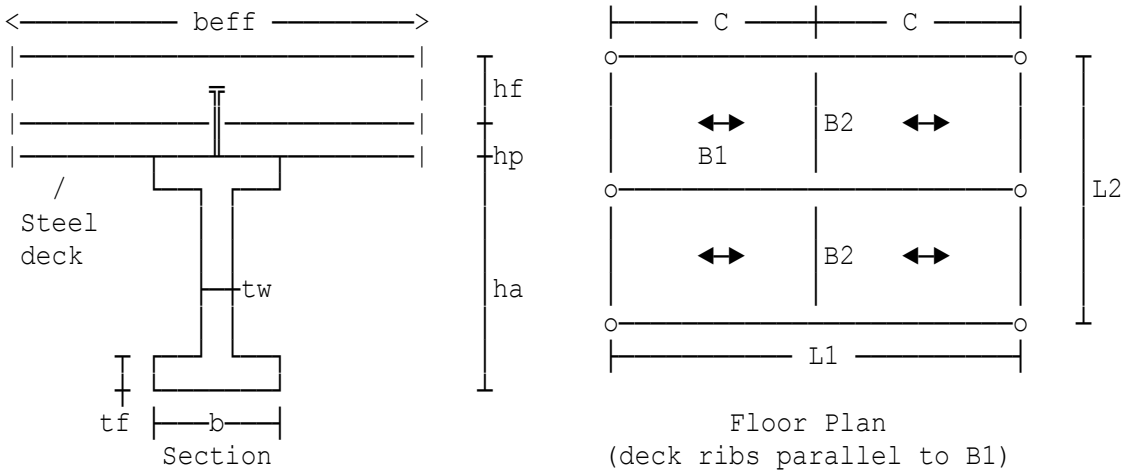

Beam span	L1=6 m
Sum of secondary beam spans	L2=15 m
Concrete density (const.stage)	D'c=19 kN/m³
Concrete density (final stage)	Dc=18 kN/m³

Deck is parallel to supporting beam and supported on secondary beams.
305 x 165 x 46 UKB
Dimensions (mm): h=306.6 b=165.7 tw=6.7 tf=11.8 r=8.9
Properties (cm): Iy=9900 Iz=896 Wply=720 Wplz=166 It=22.2

Partial safety factor (reinfnt.)	gams=1.15
Partial safety factor (concrete)	gamc=1.5
Partial safety factor (steel)	gamM0=1.0
Partial safety factor (steel)	gamM1=1.0
Partial safety factor (studs)	gamv=1.25
Permanent load (ULS)	gamG=1.25
Variable load (ULS)	gamQ=1.5

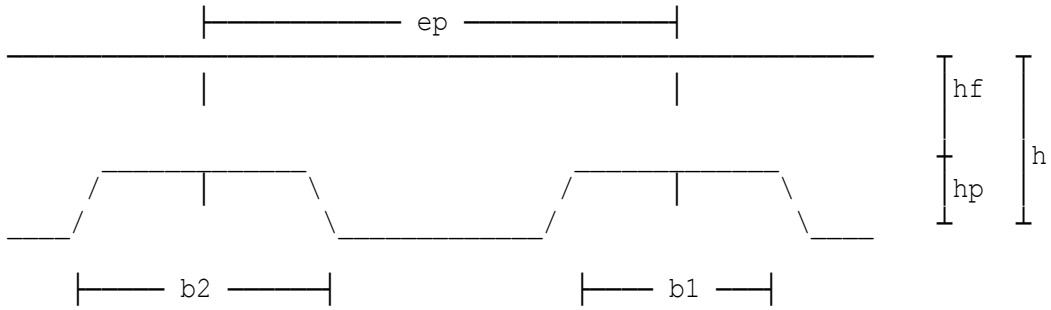

Depth of concrete above profile	hf=80 mm
Depth of profiling	hp=50 mm
Centres of profiles	ep=300 mm
Width at inside of profile	b1=125 mm
Width at outside of profile	b2=175 mm
Thickness of sheeting	tp=1.2 mm
Mean width of concrete ribs	b0=150 mm
Weight of steel decking	fsd=0.12 kN/m²
Variable load (const.stage)	fc=0.75 kN/m²
Variable load (final stage)	fi=3 kN/m²

Partition load	fp=1 kN/m²
Ceiling and services	fcs=0.25 kN/m²
Raised floor	fr=0 kN/m²
Wall or other UDL (final stage)	fw=0 kN/m
Self weight of secondary beam	fb=0.2 kN/m
Char yield strength of reinft.	fyk=500 N/mm²
Area of reinfnt.per shear plane	Ae=117 mm²/m

DESIGN SUMMARY	**305 x 165 x 46 UKB Grade**	**S 355**
CONSTRUCTION	**Steel yield strength**	**355 N/mm²**
STAGE	**Concrete strength**	**25 N/mm²**
	Maximum moment	**142 kNm**
	Moment resistance	**256 kNm**
	Unity factor	**0.555 ≤ 1**
	Maximum shear force	**48.1 kN**
	Shear resistance	**461 kN**
	Unity factor	**0.104 ≤ 1**
	Deflection to span ratio	
	(G + Q)	**1: 381**
DESIGN SUMMARY	**Effective width**	**1.5 m**
FINAL STAGE	**Stud shear resistance**	**72.6 kN**
	Number of studs per rib	**1 No.**
	Number of 19 mm studs	**18 No.**
	Stud spacing	**330 mm**
	Design compressive force:	
	Concrete	**1700 kN**
	Studs	**654 kN**
	Shear connection ratio	**0.385**
	Partial shear connection	**provided**
	Maximum moment	**317 kNm**
	Moment resistance	**371 kNm**
	Unity factor bending	**0.855 ≤ 1**
	Maximum shear force	**106 kN**
	Shear plastic resistance	**461 kN**
	Unity factor shear	**0.231 ≤ 1**
	Deflection to span ratio	
	at final stage (G + Q)	**1: 256**
	Slab shear force	**110 kN/m**
	Slab resistance	**110 kN/m**
	Min transverse reinft.	**160 mm²/m**
	Lightweight concrete (LWC) assumed	

Location: Example 1 - beam on grid line A3

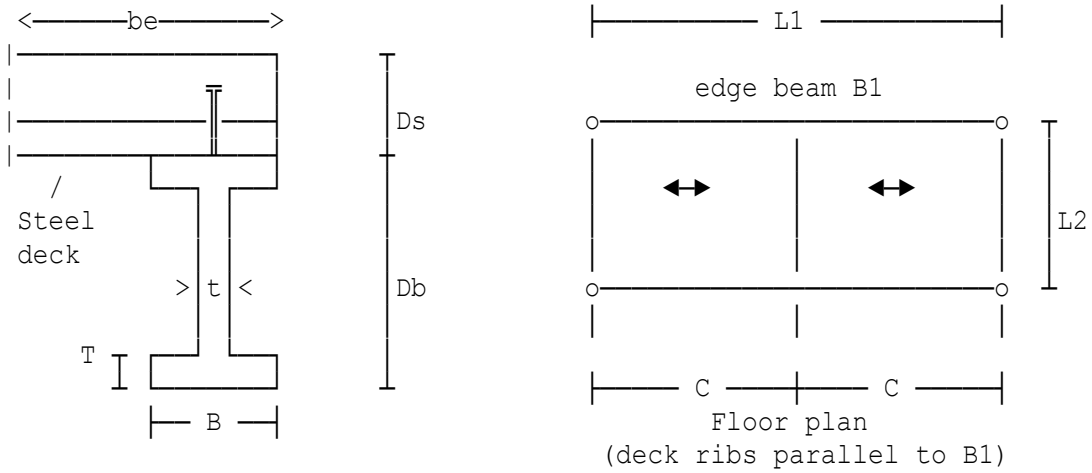

Beam span	L1=6 m
Secondary beam span	L2=6 m
Concrete cube strength	fcu=25 N/mm²
Air dry density for concrete	Dc=17.6 kN/m³
Freshwet density for concrete	D'c=18.8 kN/m³

Deck is parallel to supporting beam.
305 x 102 x 28 UB.

Young's Modulus	E=205 kN/mm²
Slab depth	Ds=115 mm
Depth of profiling	Dp=50 mm
Centres of profiles	Ct=300 mm
Width at inside of profile	b=125 mm
Width at outside of profile	p=175 mm
Profiled steel deck	decwt=0.12 kN/m²
Reinforcement allowance	reinwt=0.04 kN/m²
Steel beam allowance	selfwt=0.15 kN/m²
Construction load allowance	wc=0.5 kN/m²
Other UDL on beam	w'du=0.33 kN/m
Ceiling and services	wcs=0.25 kN/m²
Imposed	wi=3 kN/m²
Partitions	wp=1 kN/m²
Wall or other UDL	wdu=7.83 kN/m

Number of studs across flange nr=1
Spacing of connectors spac1=400 mm

Check on transverse reinforcement omitted.

COMPOSITE SECTION SUMMARY

305 x 102 x 28 UB Grade S 355 with 16 No. 19 dia. stud connectors @ 375 centres. Section is satisfactory for construction, composite, elastic, plastic, moment, shear, deflection and natural frequency requirements.

Construction stage moment	**50.717 kNm**
Steel beam mom. capacity	**143.07 kNm**
Const. stage deflection	**8.1747 mm**
Composite stage moment	**176.25 kNm**
Ultimate mom. capacity	**238.69 kNm**
Vertical shear force	**75.193 kN**
Ult. shear capacity	**394.52 kN**
Composite stage deflection	**6.2614 mm**

Location: Example 2 - long span with solid slab

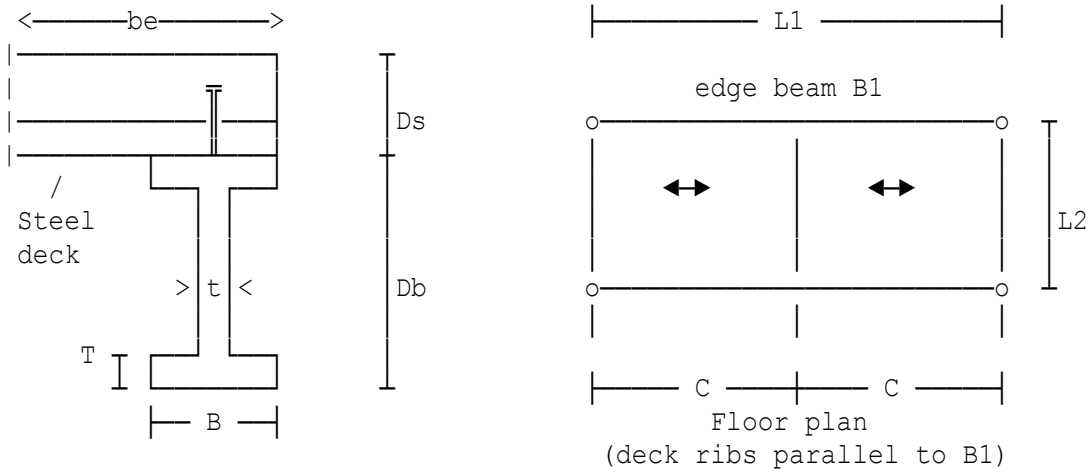

Beam span	L1=15 m
Secondary beam span	L2=6 m
Concrete cube strength	fcu=25 N/mm²
Air dry density for concrete	Dc=17.6 kN/m³
Freshwet density for concrete	D'c=18.8 kN/m³
610 x 229 x 113 UB.	
Young's Modulus	E=205 kN/mm²
Slab depth	Ds=150 mm
Profiled steel deck	decwt=0.12 kN/m²
Reinforcement allowance	reinwt=0.04 kN/m²
Steel beam allowance	selfwt=0.55 kN/m²
Construction load allowance	wc=0.5 kN/m²
Other UDL on beam	w'du=0 kN/m
Ceiling and services	wcs=0.25 kN/m²
Imposed	wi=3 kN/m²
Partitions	wp=1 kN/m²
Wall or other UDL	wdu=0 kN/m
Number of studs across flange	nr=1
Percentage to be provided	per=90 %

Check on transverse reinforcement omitted.

COMPOSITE SECTION SUMMARY	**610 x 229 x 113 UB Grade S 355 with 90 No. 19 dia. stud connectors @ 166 centres. Section is satisfactory for construction, composite, elastic, plastic, moment, shear, deflection and natural frequency requirements.**
	Construction stage moment 484.37 kNm
	Steel beam mom. capacity 1131.6 kNm
	Const. stage deflection 31.197 mm
	Composite stage moment 965.15 kNm
	Ultimate mom. capacity 1747.9 kNm
	Vertical shear force 128.69 kN
	Ult. shear capacity 1396.1 kN
	Composite stage deflection 16.816 mm

Location: Example 3 - with fire resistance check

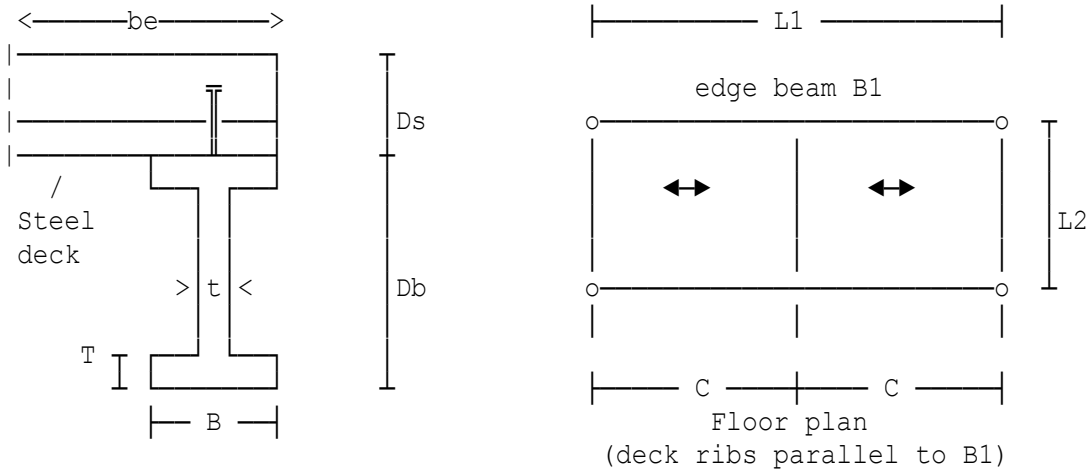

Beam span	L1=6 m
Secondary beam span	L2=6 m
Concrete cube strength	fcu=25 N/mm²
Air dry density for concrete	Dc=17.6 kN/m³
Freshwet density for concrete	D'c=18.8 kN/m³

Deck is parallel to supporting beam.
305 x 102 x 28 UB.

Young's Modulus	E=205 kN/mm²
Slab depth	Ds=115 mm
Depth of profiling	Dp=50 mm
Centres of profiles	Ct=300 mm
Width at inside of profile	b=125 mm
Width at outside of profile	p=175 mm
Profiled steel deck	decwt=0.12 kN/m²
Reinforcement allowance	reinwt=0.04 kN/m²
Steel beam allowance	selfwt=0.15 kN/m²
Construction load allowance	wc=0.5 kN/m²
Other UDL on beam	w'du=0.33 kN/m
Ceiling and services	wcs=0.25 kN/m²
Imposed	wi=3 kN/m²
Partitions	wp=1 kN/m²
Wall or other UDL	wdu=7.83 kN/m

Number of studs across flange nr=1
Spacing of connectors spac1=400 mm

Check on transverse reinforcement omitted.

Total permanent load Vfp=28 kN

COMPOSITE SECTION SUMMARY	**305 x 102 x 28 UB Grade S 355 with 16 No. 19 dia. stud connectors @ 375 centres. Section is satisfactory for construction, composite, elastic, plastic, moment, shear, deflection and natural frequency requirements.**	
	Construction stage moment	**50.717 kNm**
	Steel beam mom. capacity	**143.07 kNm**
	Const. stage deflection	**8.1747 mm**
	Composite stage moment	**176.25 kNm**
	Ultimate mom. capacity	**238.69 kNm**
	Vertical shear force	**75.193 kN**
	Ult. shear capacity	**394.52 kN**
	Composite stage deflection	**6.2614 mm**
FIRE RESISTANCE SUMMARY	**Exposed surface area**	**910.8 mm²**
	Area of section	**35.9 cm²**
	Section factor	**250 /m**
	Load Ratio (R)	**0.48505**
	Section does not have an inherent fire resistance of 30 minutes. Fire protection should be provided	

Location: Ex1

Composite edge beam with a secondary beam at mid-span. Calculations are in accordance with BS EN 1994-1-1:2004 the Code of practice for the 'Design of composite steel and concrete structures'. The beam is unpropped during construction and is assumed to be simply supported.

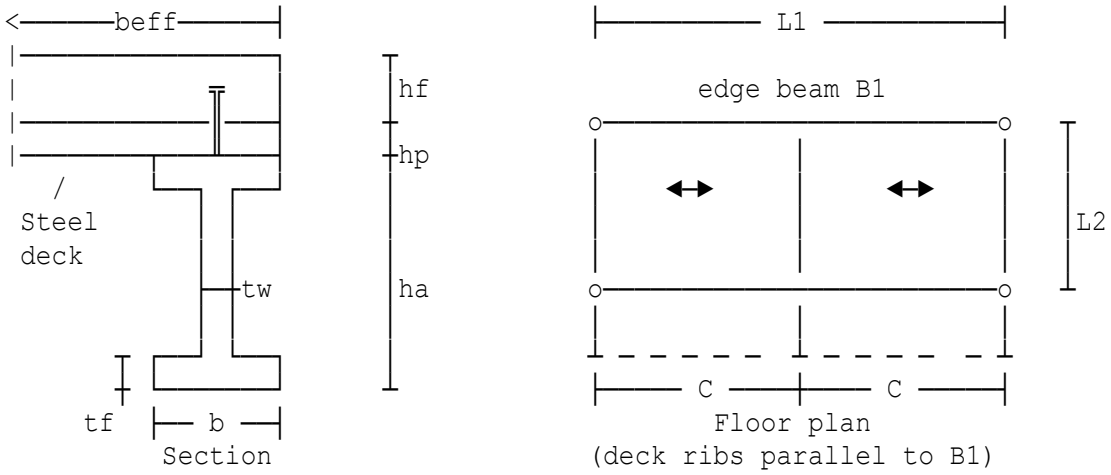

Beam span	L1=6 m
Secondary beam span	L2=6 m
Concrete density (const.stage)	D'c=19 kN/m³
Concrete density (final stage)	Dc=18 kN/m³

Deck is parallel to supporting beam and supported on secondary beams.
305 x 102 x 28 UKB
Dimensions (mm): h=308.7 b=101.8 tw=6 tf=8.8 r=7.6
Properties (cm): Iy=5370 Iz=155 Wply=403 Wplz=48.5 It=7.4

Partial safety factor (reinfnt.)	gams=1.15
Partial safety factor (concrete)	gamc=1.5
Partial safety factor (steel)	gamM0=1.0
Partial safety factor (steel)	gamM1=1.0
Partial safety factor (studs)	gamv=1.25
Permanent load (ULS)	gamG=1.25
Variable load (ULS)	gamQ=1.5

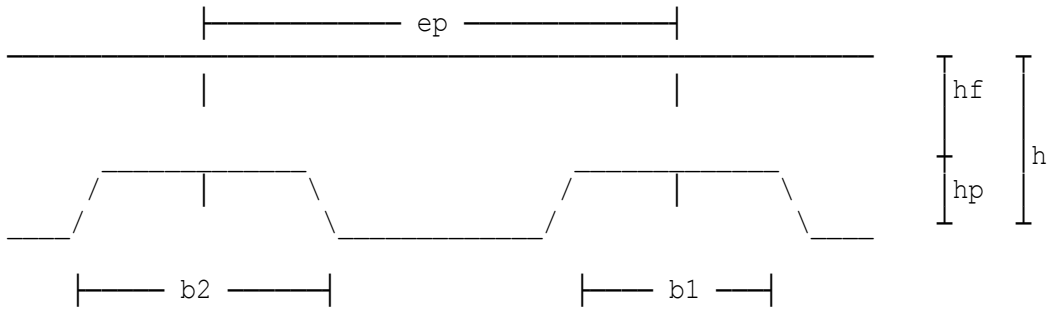

Depth of concrete above profile	hf=80 mm
Depth of profiling	hp=50 mm
Centres of profiles	ep=300 mm
Width at inside of profile	b1=125 mm
Width at outside of profile	b2=175 mm
Thickness of sheeting	tp=1.2 mm

Mean width of concrete ribs	b0=125 mm
Weight of steel decking	fsd=0.12 kN/m²
Variable load (const.stage)	fc=0.75 kN/m²
Variable load (final stage)	fi=3 kN/m²
Partition load	fp=1 kN/m²
Ceiling and services	fcs=0.25 kN/m²
Raised floor	fr=0 kN/m²
Wall or other UDL (final stage)	fw=0 kN/m
Self weight of secondary beam	fb=0.2 kN/m
Char yield strength of reinft.	fyk=500 N/mm²
Area of reinfnt.per shear plane	Ae=198 mm²/m

DESIGN SUMMARY	**305 x 102 x 28 UKB Grade**	**S 355**
CONSTRUCTION	**Steel yield strength**	**355 N/mm²**
STAGE	**Concrete strength**	**25 N/mm²**
	Maximum moment	**57.3 kNm**
	Moment resistance	**143 kNm**
	Unity factor	**0.4 ≤ 1**
	Buckling resistance	**95.7 kNm**
	Unity factor	**0.599 ≤ 1**
	Maximum shear force	**19.6 kN**
	Shear resistance	**407 kN**
	Unity factor	**0.048 ≤ 1**
	Deflection to span ratio (G + Q)	**1: 511**
DESIGN SUMMARY	**Effective width**	**0.75 m**
FINAL STAGE	**Stud shear resistance**	**72.6 kN**
	Number of studs per rib	**1 No.**
	Number of 19 mm studs	**12 No.**
	Stud spacing	**500 mm**
	Design compressive force:	
	Concrete	**850 kN**
	Studs	**436 kN**
	Shear connection ratio	**0.513**
	Partial shear connection	**provided**
	Maximum moment	**127 kNm**
	Moment resistance	**226 kNm**
	Unity factor bending	**0.563 ≤ 1**
	Maximum shear force	**42.9 kN**
	Shear plastic resistance	**407 kN**
	Unity factor shear	**0.106 ≤ 1**
	Deflection to span ratio at final stage (G + Q)	**1: 448**
	Slab shear force	**145 kN/m**
	Slab resistance	**145 kN/m**
	Min transverse reinft.	**198 mm²/m**
	Lightweight concrete (LWC) assumed	

Location: Ex2 - long span beam with solid slab

Composite edge beam with a secondary beam at mid-span. Calculations are in accordance with BS EN 1994-1-1:2004 the Code of practice for the 'Design of composite steel and concrete structures'. The beam is unpropped during construction and is assumed to be simply supported.

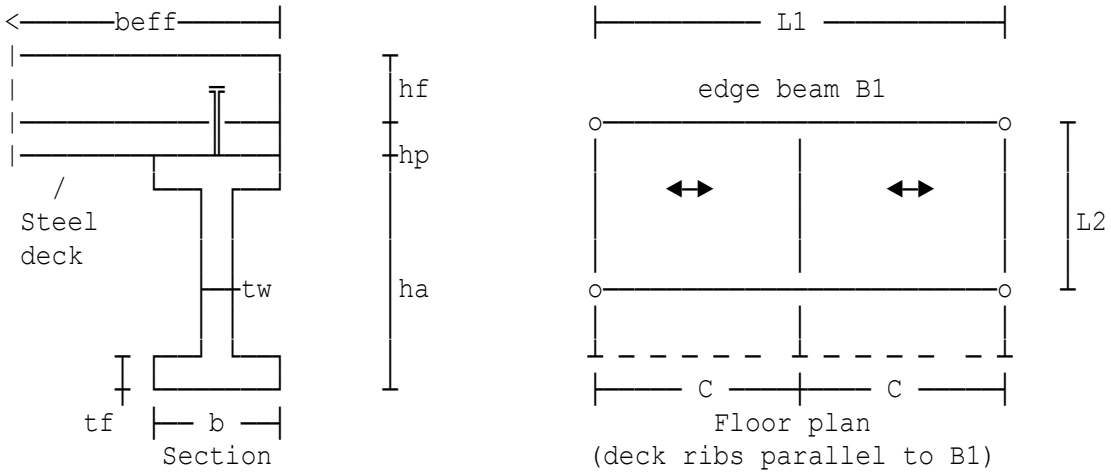

Beam span	L1=15 m
Secondary beam span	L2=6 m
Concrete density (const.stage)	D'c=19 kN/m³
Concrete density (final stage)	Dc=18 kN/m³
610 x 229 x 113 UKB	
Dimensions (mm): h=607.6 b=228.2 tw=11.1 tf=17.3 r=12.7	
Properties (cm): Iy=87300 Iz=3430 Wply=3280 Wplz=469 It=111	
Partial safety factor (reinfnt.)	gams=1.15
Partial safety factor (concrete)	gamc=1.5
Partial safety factor (steel)	gamM0=1.0
Partial safety factor (steel)	gamM1=1.0
Partial safety factor (studs)	gamv=1.25
Permanent load (ULS)	gamG=1.25
Variable load (ULS)	gamQ=1.5
Variable load (const.stage)	fc=0.5 kN/m²
Variable load (final stage)	fi=3 kN/m²
Partition load	fp=1 kN/m²
Ceiling and services	fcs=0.25 kN/m²
Raised floor	fr=0 kN/m²
Wall or other UDL (final stage)	fw=0 kN/m
Self weight of secondary beam	fb=0.2 kN/m
Char yield strength of reinft.	fyk=500 N/mm²
Governing shear length	hf=150 mm
Area of reinfnt.per shear plane	Ae=624 mm²/m

DESIGN SUMMARY	**610 x 229 x 113 UKB Grade S 355**	
CONSTRUCTION	**Steel yield strength**	**345 N/mm²**
STAGE	**Concrete strength**	**25 N/mm²**
	Maximum moment	**439 kNm**
	Moment resistance	**1132 kNm**
	Unity factor	**0.388 ≤ 1**
	Buckling resistance	**707 kNm**
	Unity factor	**0.621 ≤ 1**
	Maximum shear force	**63.7 kN**
	Shear resistance	**1421 kN**
	Unity factor	**0.045 ≤ 1**
	Deflection to span ratio	
	(G + Q)	**1: 418**
DESIGN SUMMARY	**Effective width**	**1.88 m**
FINAL STAGE	**Stud shear resistance**	**72.6 kN**
	Number of 19 mm studs	**78 No.**
	Stud spacing	**190 mm**
	Design compressive force:	
	Concrete	**3984 kN**
	Studs	**2833 kN**
	Shear connection ratio	**0.711**
	Partial shear connection	**provided**
	Maximum moment	**908 kNm**
	Moment resistance	**1693 kNm**
	Unity factor bending	**0.536 ≤ 1**
	Maximum shear force	**126 kN**
	Shear plastic resistance	**1421 kN**
	Unity factor shear	**0.089 ≤ 1**
	Deflection to span ratio	
	at final stage (G + Q)	**1: 351**
	Slab shear force	**382 kN/m**
	Slab resistance	**382 kN/m**
	Min transverse reinft.	**624 mm²/m**
	Lightweight concrete (LWC) assumed	

Location: Ex3

Composite edge beam with a secondary beam at mid-span. Calculations are in accordance with BS EN 1994-1-1:2004 the Code of practice for the 'Design of composite steel and concrete structures'. The beam is unpropped during construction and is assumed to be simply supported.

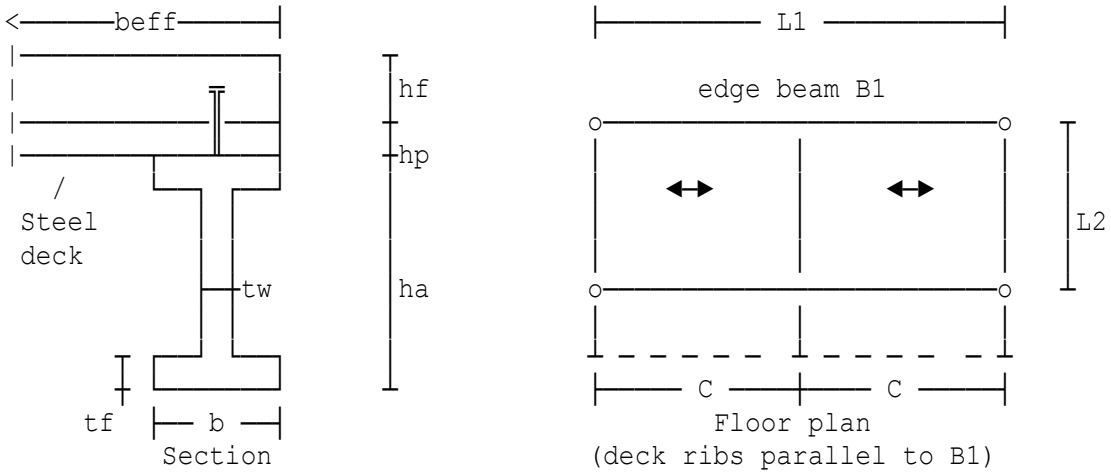

Beam span	L1=6 m
Secondary beam span	L2=6 m
Concrete density (const.stage)	D'c=19 kN/m³
Concrete density (final stage)	Dc=18 kN/m³

Deck is parallel to supporting beam and supported on secondary beams.
305 x 102 x 28 UKB
Dimensions (mm): h=308.7 b=101.8 tw=6 tf=8.8 r=7.6
Properties (cm): Iy=5370 Iz=155 Wply=403 Wplz=48.5 It=7.4

Partial safety factor (reinfnt.)	gams=1.15
Partial safety factor (concrete)	gamc=1.5
Partial safety factor (steel)	gamM0=1.0
Partial safety factor (steel)	gamM1=1.0
Partial safety factor (studs)	gamv=1.25
Permanent load (ULS)	gamG=1.25
Variable load (ULS)	gamQ=1.5

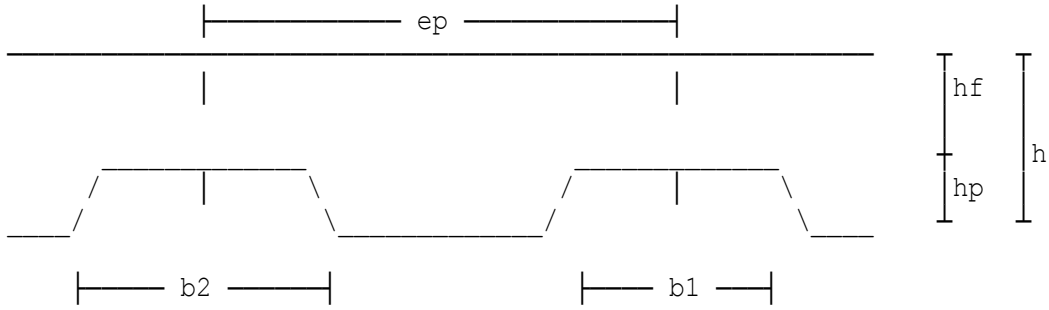

Depth of concrete above profile	hf=80 mm
Depth of profiling	hp=50 mm
Centres of profiles	ep=300 mm
Width at inside of profile	b1=125 mm
Width at outside of profile	b2=175 mm
Thickness of sheeting	tp=1.2 mm

Mean width of concrete ribs	b0=125 mm
Weight of steel decking	fsd=0.12 kN/m²
Variable load (const.stage)	fc=0.5 kN/m²
Variable load (final stage)	fi=3 kN/m²
Partition load	fp=1 kN/m²
Ceiling and services	fcs=0.25 kN/m²
Raised floor	fr=0 kN/m²
Wall or other UDL (final stage)	fw=0 kN/m
Self weight of secondary beam	fb=0.2 kN/m
Char yield strength of reinft.	fyk=500 N/mm²
Area of reinfnt.per shear plane	Ae=198 mm²/m

DESIGN SUMMARY	**305 x 102 x 28 UKB Grade**	**S 355**
CONSTRUCTION	**Steel yield strength**	**355 N/mm²**
STAGE	**Concrete strength**	**25 N/mm²**
	Maximum moment	**52.2 kNm**
	Moment resistance	**143 kNm**
	Unity factor	**0.365 ≤ 1**
	Buckling resistance	**95.7 kNm**
	Unity factor	**0.546 ≤ 1**
	Maximum shear force	**17.9 kN**
	Shear resistance	**407 kN**
	Unity factor	**0.044 ≤ 1**
	Deflection to span ratio (G + Q)	**1: 553**
DESIGN SUMMARY	**Effective width**	**0.75 m**
FINAL STAGE	**Stud shear resistance**	**72.6 kN**
	Number of studs per rib	**1 No.**
	Number of 19 mm studs	**12 No.**
	Stud spacing	**500 mm**
	Design compressive force:	
	Concrete	**850 kN**
	Studs	**436 kN**
	Shear connection ratio	**0.513**
	Partial shear connection	**provided**
	Maximum moment	**127 kNm**
	Moment resistance	**226 kNm**
	Unity factor bending	**0.563 ≤ 1**
	Maximum shear force	**42.9 kN**
	Shear plastic resistance	**407 kN**
	Unity factor shear	**0.106 ≤ 1**
	Deflection to span ratio at final stage (G + Q)	**1: 448**
	Slab shear force	**145 kN/m**
	Slab resistance	**145 kN/m**
	Min transverse reinft.	**198 mm²/m**
	Lightweight concrete (LWC) assumed	

Location: Ex4 - As Ex1 but with P405 rules

Composite edge beam with a secondary beam at mid-span. Calculations are in accordance with BS EN 1994-1-1:2004 the Code of practice for the 'Design of composite steel and concrete structures'. The beam is unpropped during construction and is assumed to be simply supported.

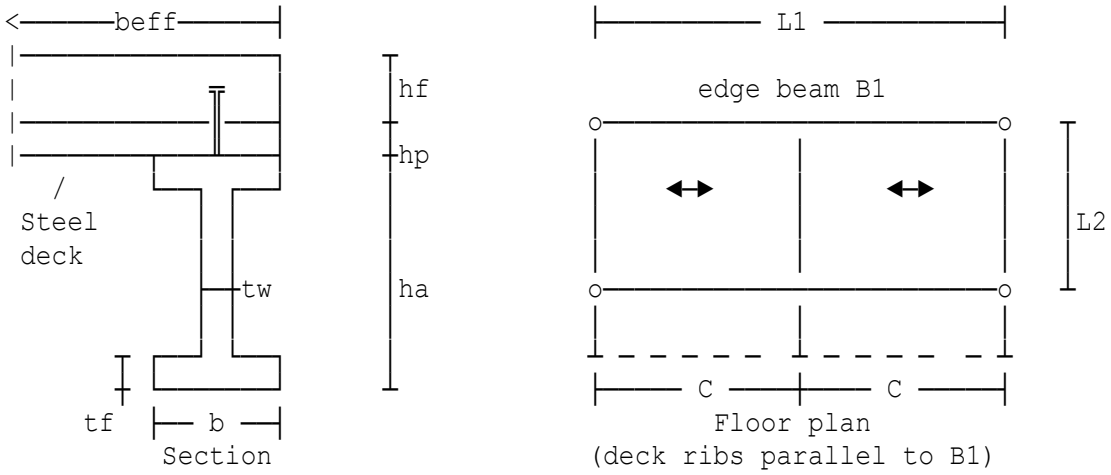

Beam span	L1=6 m
Secondary beam span	L2=6 m
Concrete density (const.stage)	D'c=19 kN/m³
Concrete density (final stage)	Dc=18 kN/m³

Deck is parallel to supporting beam and supported on secondary beams.
305 x 102 x 28 UKB
Dimensions (mm): h=308.7 b=101.8 tw=6 tf=8.8 r=7.6
Properties (cm): Iy=5370 Iz=155 Wply=403 Wplz=48.5 It=7.4

Partial safety factor (reinfnt.)	gams=1.15
Partial safety factor (concrete)	gamc=1.5
Partial safety factor (steel)	gamM0=1.0
Partial safety factor (steel)	gamM1=1.0
Partial safety factor (studs)	gamv=1.25
Permanent load (ULS)	gamG=1.25
Variable load (ULS)	gamQ=1.5

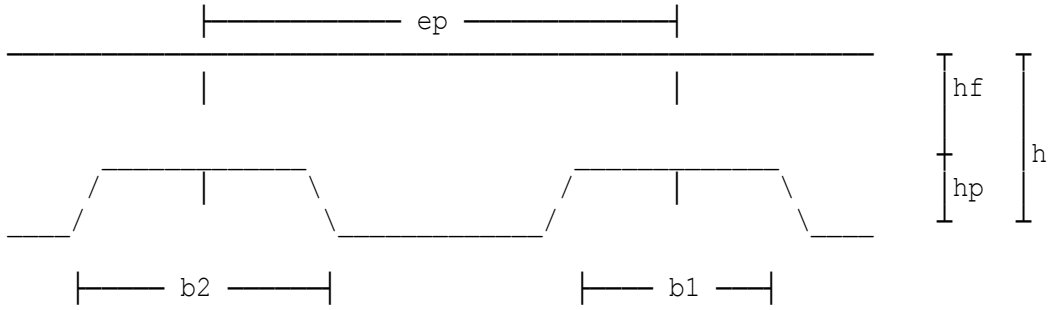

Depth of concrete above profile	hf=80 mm
Depth of profiling	hp=50 mm
Centres of profiles	ep=300 mm
Width at inside of profile	b1=125 mm
Width at outside of profile	b2=175 mm
Thickness of sheeting	tp=1.2 mm

Mean width of concrete ribs	b0=125 mm
Weight of steel decking	fsd=0.12 kN/m²
Variable load (const.stage)	fc=0.75 kN/m²
Variable load (final stage)	fi=3 kN/m²
Partition load	fp=1 kN/m²
Ceiling and services	fcs=0.25 kN/m²
Raised floor	fr=0 kN/m²
Wall or other UDL (final stage)	fw=0 kN/m
Self weight of secondary beam	fb=0.2 kN/m
Char yield strength of reinft.	fyk=500 N/mm²
Area of reinfnt.per shear plane	Ae=87 mm²/m

DESIGN SUMMARY	**305 x 102 x 28 UKB Grade**	**S 355**
CONSTRUCTION	**Steel yield strength**	**355 N/mm²**
STAGE	**Concrete strength**	**25 N/mm²**
	Maximum moment	**57.3 kNm**
	Moment resistance	**143 kNm**
	Unity factor	**0.4 ≤ 1**
	Buckling resistance	**95.7 kNm**
	Unity factor	**0.599 ≤ 1**
	Maximum shear force	**19.6 kN**
	Shear resistance	**407 kN**
	Unity factor	**0.048 ≤ 1**
	Deflection to span ratio (G + Q)	**1: 511**
DESIGN SUMMARY	**Effective width**	**0.75 m**
FINAL STAGE	**Stud shear resistance**	**72.6 kN**
	Number of studs per rib	**1 No.**
	Number of 19 mm studs	**8 No.**
	Stud spacing	**750 mm**
	Design compressive force:	
	Concrete	**850 kN**
	Studs	**291 kN**
	Shear connection ratio	**0.342**
	Partial shear connection	**provided**
	Maximum moment	**127 kNm**
	Moment resistance	**203 kNm**
	Unity factor bending	**0.627 ≤ 1**
	Maximum shear force	**42.9 kN**
	Shear plastic resistance	**407 kN**
	Unity factor shear	**0.106 ≤ 1**
	Deflection to span ratio at final stage (G + Q)	**1: 341**
	Slab shear force	**96.8 kN/m**
	Slab resistance	**97 kN/m**
	Min transverse reinft.	**160 mm²/m**
	Lightweight concrete (LWC) assumed	

Location: Beam on gridline A3

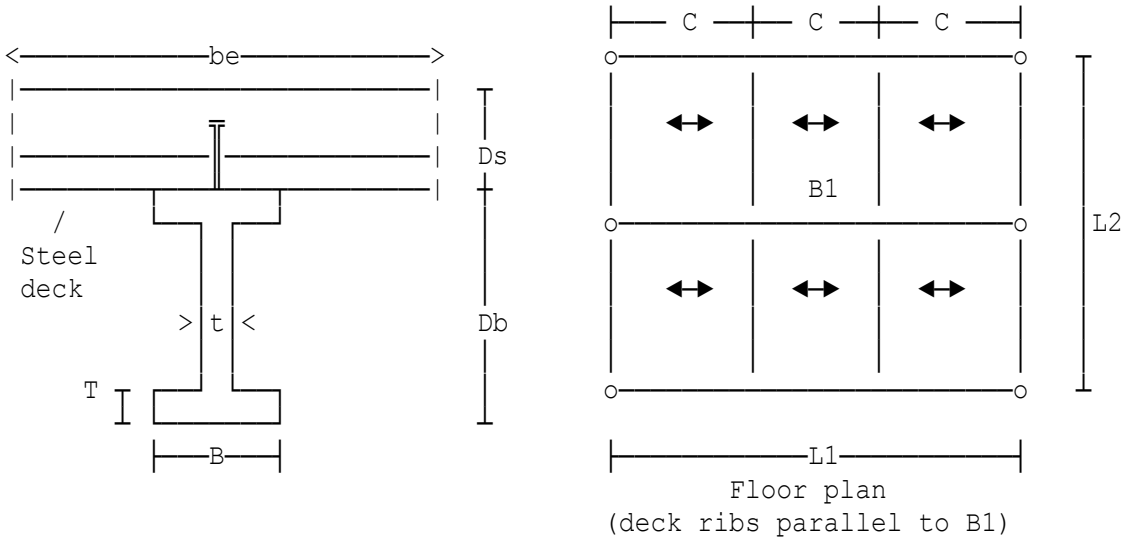

Beam span	L1=6 m
Sum of secondary beam spans	L2=15 m
Concrete cube strength	fcu=25 N/mm²
Air dry density for concrete	Dc=17.6 kN/m³
Freshwet density for concrete	D'c=18.8 kN/m³

Deck is parallel to supporting beam.
305 x 165 x 40 UB.

Young's Modulus	E=205 kN/mm²
Slab depth	Ds=115 mm
Depth of profiling	Dp=50 mm
Centres of profiles	Ct=300 mm
Width at inside of profile	b=125 mm
Width at outside of profile	p=175 mm
Profiled steel deck	decwt=0.12 kN/m²
Reinforcement allowance	reinwt=0.04 kN/m²
Steel beam allowance	selfwt=0.15 kN/m²
Construction load allowance	wc=0.5 kN/m²
Other UDL on beam	w'du=0.5 kN/m
Ceiling and services	wcs=0.25 kN/m²
Imposed	wi=3 kN/m²
Partitions	wp=1 kN/m²
Wall or other UDL	wdu=0.5 kN/m

Number of studs across flange nr=1
Spacing of connectors spac1=200 mm

Check on transverse reinforcement omitted.

COMPOSITE SECTION SUMMARY	**305 x 165 x 40 UB Grade S 355 with 30 No. 19 dia. stud connectors @ 200 centres. Section is satisfactory for construction, composite, elastic, plastic, moment, shear, deflection and natural frequency requirements.**
	Construction stage moment 111.23 kNm
	Steel beam mom. capacity 221.17 kNm
	Const. stage deflection 13.873 mm
	Composite stage moment 285.2 kNm
	Ultimate mom. capacity 360.37 kNm
	Vertical shear force 143.12 kN
	Ult. shear capacity 387.75 kN
	Composite stage deflection 10.757 mm

Location: long span with solid slab

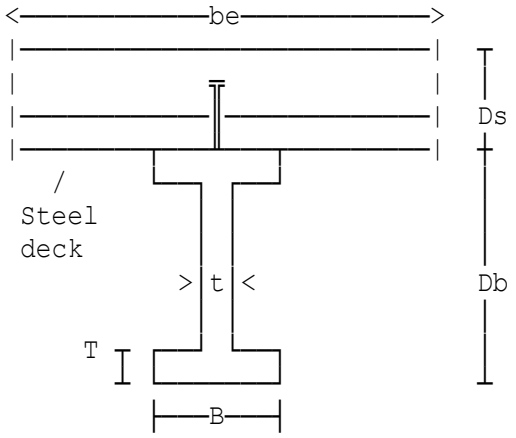

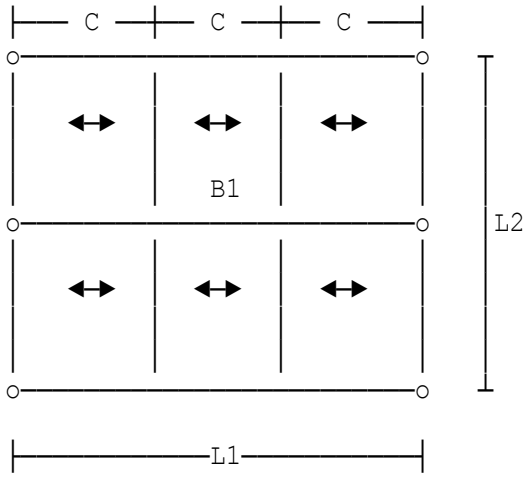

Floor plan
(deck ribs parallel to B1)

Beam span	L1=15 m
Sum of secondary beam spans	L2=15 m
Concrete cube strength	fcu=25 N/mm²
Air dry density for concrete	Dc=17.6 kN/m³
Freshwet density for concrete	D'c=18.8 kN/m³
838 x 292 x 176 UB.	
Young's Modulus	E=205 kN/mm²
Slab depth	Ds=150 mm
Profiled steel deck	decwt=0.12 kN/m²
Reinforcement allowance	reinwt=0.04 kN/m²
Steel beam allowance	selfwt=0.9 kN/m²
Construction load allowance	wc=0.5 kN/m²
Other UDL on beam	w'du=0 kN/m
Ceiling and services	wcs=0.25 kN/m²
Imposed	wi=3 kN/m²
Partitions	wp=1 kN/m²
Wall or other UDL	wdu=0 kN/m

Number of studs across flange nr=2
Percentage to be provided per=90 %

Check on transverse reinforcement omitted.

COMPOSITE SECTION SUMMARY	**838 x 292 x 176 UB Grade S 355 with 172 No. 19 dia. stud connectors @ 174 centres. Studs to be grouped in 2 's. Section is satisfactory for construction, composite, elastic, plastic, moment, shear, deflection and natural frequency requirements.**
	Construction stage moment 1168.3 kNm
	Steel beam mom. capacity 2349.5 kNm
	Const. stage deflection 34.554 mm
	Composite stage moment 2236.6 kNm
	Ultimate mom. capacity 3689.8 kNm
	Vertical shear force 447.33 kN
	Ult. shear capacity 2419.5 kN
	Composite stage deflection 16.718 mm

Location: Example 1 with fire resistance check

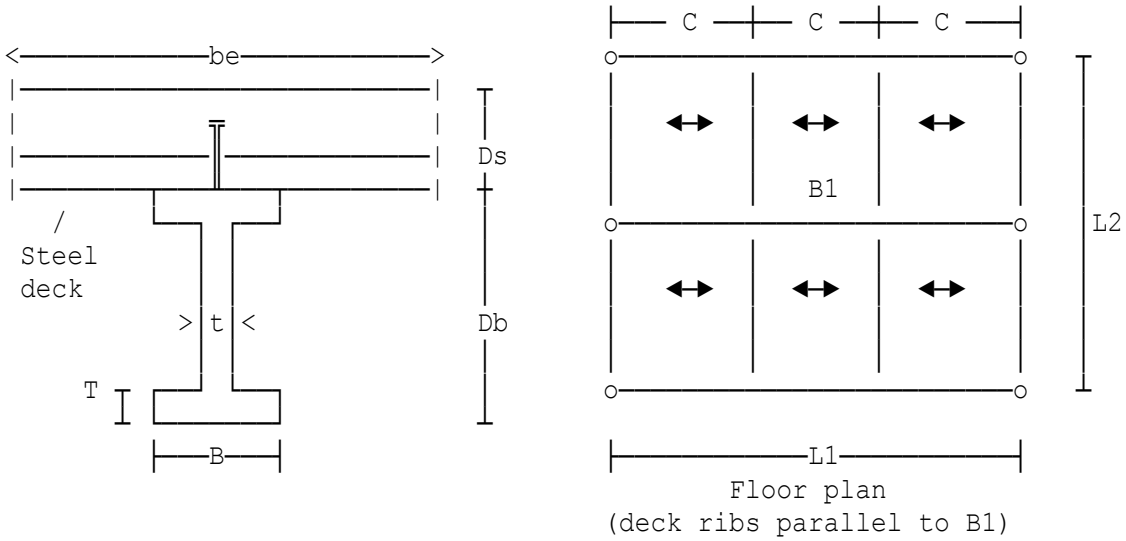

Beam span	L1=6 m
Sum of secondary beam spans	L2=15 m
Concrete cube strength	fcu=25 N/mm²
Air dry density for concrete	Dc=17.6 kN/m³
Freshwet density for concrete	D'c=18.8 kN/m³

Deck is parallel to supporting beam.
305 x 165 x 40 UB.

Young's Modulus	E=205 kN/mm²
Slab depth	Ds=115 mm
Depth of profiling	Dp=50 mm
Centres of profiles	Ct=300 mm
Width at inside of profile	b=125 mm
Width at outside of profile	p=175 mm
Profiled steel deck	decwt=0.12 kN/m²
Reinforcement allowance	reinwt=0.04 kN/m²
Steel beam allowance	selfwt=0.15 kN/m²
Construction load allowance	wc=0.5 kN/m²
Other UDL on beam	w'du=0.5 kN/m
Ceiling and services	wcs=0.25 kN/m²
Imposed	wi=3 kN/m²
Partitions	wp=1 kN/m²
Wall or other UDL	wdu=0.5 kN/m

Number of studs across flange nr=1
Spacing of connectors spac1=200 mm

Check on transverse reinforcement omitted.

Total permanent load Vfp=45 kN

COMPOSITE SECTION SUMMARY	**305 x 165 x 40 UB Grade S 355 with 30 No. 19 dia. stud connectors @ 200 centres. Section is satisfactory for construction, composite, elastic, plastic, moment, shear, deflection and natural frequency requirements.**	
	Construction stage moment	**111.23 kNm**
	Steel beam mom. capacity	**221.17 kNm**
	Const. stage deflection	**13.873 mm**
	Composite stage moment	**285.2 kNm**
	Ultimate mom. capacity	**360.37 kNm**
	Vertical shear force	**143.12 kN**
	Ult. shear capacity	**387.75 kN**
	Composite stage deflection	**10.757 mm**
FIRE RESISTANCE SUMMARY	**Exposed surface area**	**1089.8 mm²**
	Area of section	**51.3 cm²**
	Section factor	**210 /m**
	Load Ratio (R)	**0.50107**
	Section does not have an inherent fire resistance of 30 minutes. Fire protection should be provided	

Location: Ex1 - beam on grid line A3

Composite internal beam with secondary beams located at 1/3 points to BS EN 1994-1-1:2004 the Code for the 'Design of composite steel and concrete structures'. The beam is considered to be unpropped during construction and is assumed to be simply supported.

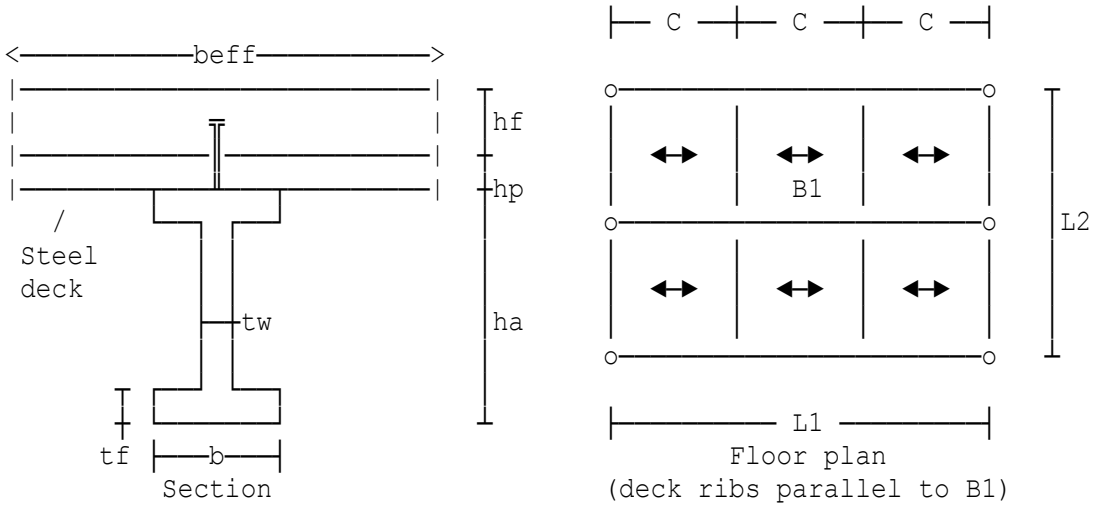

Beam span	L1=6 m
Sum of secondary beam spans	L2=15 m
Concrete density (const.stage)	D'c=19 kN/m³
Concrete density (final stage)	Dc=18 kN/m³

Deck is parallel to supporting beam and supported on secondary beams.
305 x 165 x 40 UKB
Dimensions (mm): h=303.4 b=165 tw=6 tf=10.2 r=8.9
Properties (cm): Iy=8500 Iz=764 Wply=623 Wplz=142 It=14.7

Partial safety factor (reinfnt.)	gams=1.15
Partial safety factor (concrete)	gamc=1.5
Partial safety factor (steel)	gamM0=1.0
Partial safety factor (steel)	gamM1=1.0
Partial safety factor (studs)	gamv=1.25
Permanent load (ULS)	gamG=1.25
Variable load (ULS)	gamQ=1.5

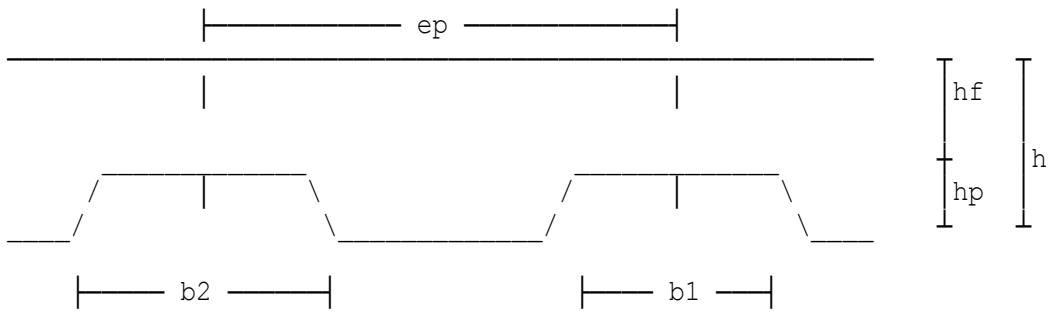

Depth of concrete above profile	hf=80 mm
Depth of profiling	hp=50 mm
Centres of profiles	ep=300 mm
Width at inside of profile	b1=125 mm
Width at outside of profile	b2=175 mm

Thickness of sheeting	tp=1.2 mm
Mean width of concrete ribs	b0=125 mm
Weight of steel decking	fsd=0.12 kN/m²
Variable load (const.stage)	fc=0.75 kN/m²
Variable load (final stage)	fi=3 kN/m²
Partition load	fp=1 kN/m²
Ceiling and services	fcs=0.25 kN/m²
Raised floor	fr=0 kN/m²
Wall or other UDL (final stage)	fw=0.5 kN/m
Self weight of secondary beam	fb=0.2 kN/m
Char yield strength of reinft.	fyk=500 N/mm²
Area of reinfnt.per shear plane	Ae=328 mm²/m

DESIGN SUMMARY	**305 x 165 x 40 UKB Grade**	**S 355**
CONSTRUCTION	**Steel yield strength**	**355 N/mm²**
STAGE	**Concrete strength**	**25 N/mm²**
	Maximum moment	**127 kNm**
	Moment resistance	**221 kNm**
	Unity factor	**0.576 ≤ 1**
	Maximum shear force	**64 kN**
	Shear resistance	**411 kN**
	Unity factor	**0.156 ≤ 1**
	Deflection to span ratio	
	(G + Q)	**1: 287**
DESIGN SUMMARY	**Effective width**	**1.5 m**
FINAL STAGE	**Stud shear resistance**	**72.6 kN**
	Number of studs per rib	**1 No.**
	Number of 19 mm studs	**see footnote**
	Stud spacing between	**see footnote**
	Design compressive force:	
	Concrete	**1700 kN**
	Studs	**799 kN**
	Shear connection ratio	**0.47**
	Partial shear connection	**provided**
	Maximum moment	**286 kNm**
	Moment resistance	**340 kNm**
	Unity factor bending	**0.839 ≤ 1**
	Maximum shear force	**144 kN**
	Shear plastic resistance	**411 kN**
	Unity factor shear	**0.349 ≤ 1**
	Deflection to span ratio	
	at final stage (G + Q)	**1: 247**
	Slab shear force	**202 kN/m**
	Slab resistance	**202 kN/m**
	Min transverse reinft.	**328 mm²/m**
	Lightweight concrete (LWC) assumed	

Stud spacing between each support and 1/3 point to be 180 mm.
The number of studs required between each support & 1/3 point is 11 No. Between 1/3 points provide nominal studs.

Location: Ex2 - long span with solid slab

Composite internal beam with secondary beams located at 1/3 points to BS EN 1994-1-1:2004 the Code for the 'Design of composite steel and concrete structures'. The beam is considered to be unpropped during construction and is assumed to be simply supported.

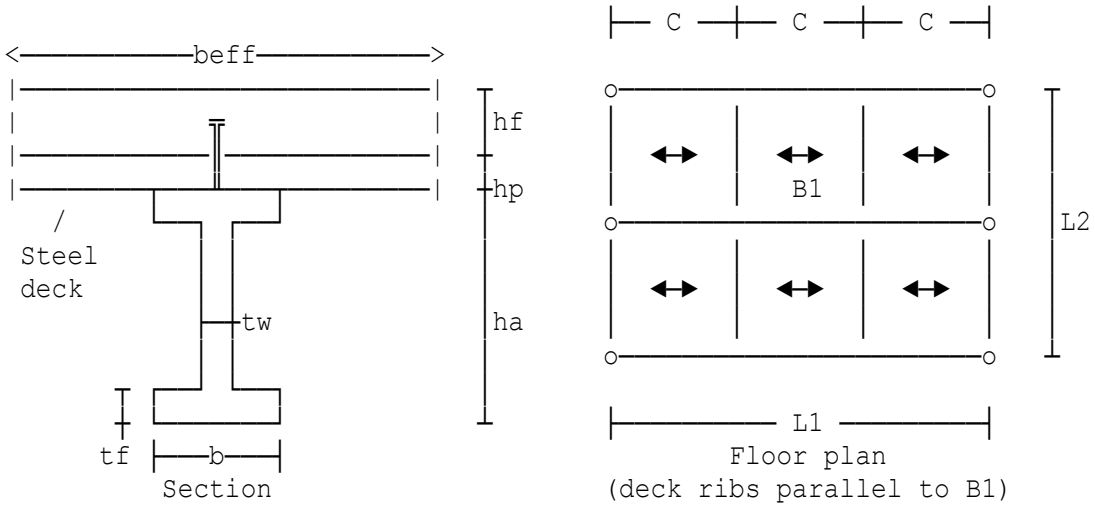

Beam span	L1=15 m
Sum of secondary beam spans	L2=15 m
Concrete density (const.stage)	D'c=26 kN/m³
Concrete density (final stage)	Dc=25 kN/m³

838 x 292 x 176 UKB
Dimensions (mm): h=834.9 b=291.7 tw=14 tf=18.8 r=17.8
Properties (cm): Iy=246000 Iz=7800 Wply=6810 Wplz=842 It=221

Partial safety factor (reinfnt.)	gams=1.15
Partial safety factor (concrete)	gamc=1.5
Partial safety factor (steel)	gamM0=1.0
Partial safety factor (steel)	gamM1=1.0
Partial safety factor (studs)	gamv=1.25
Permanent load (ULS)	gamG=1.25
Variable load (ULS)	gamQ=1.5
Variable load (const.stage)	fc=0.5 kN/m²
Variable load (final stage)	fi=3 kN/m²
Partition load	fp=1 kN/m²
Ceiling and services	fcs=0.25 kN/m²
Raised floor	fr=0 kN/m²
Wall or other UDL (final stage)	fw=0.5 kN/m
Self weight of secondary beam	fb=0.2 kN/m
Char yield strength of reinft.	fyk=500 N/mm²
Governing shear length	hf=150 mm
Area of reinfnt.per shear plane	Ae=968 mm²/m

DESIGN SUMMARY	**838 x 292 x 176 UKB Grade S 355**	
CONSTRUCTION	**Steel yield strength**	**345 N/mm²**
STAGE	**Concrete strength**	**30 N/mm²**
	Maximum moment	**1090 kNm**
	Moment resistance	**2349 kNm**
	Unity factor	**0.464 ≤ 1**
	Buckling resistance	**2235 kNm**
	Unity factor	**0.488 ≤ 1**
	Maximum shear force	**222 kN**
	Shear resistance	**2463 kN**
	Unity factor	**0.09 ≤ 1**
	Deflection to span ratio	
	(G + Q)	**1: 379**
DESIGN SUMMARY	**Effective width**	**3.83 m**
FINAL STAGE	**Stud shear resistance**	**81.7 kN**
	Studs across flange	**in pairs**
	Number of 19 mm studs	**see footnote**
	Stud spacing between	**see footnote**
	Design compressive force:	
	Concrete	**7728 kN**
	Studs	**5389 kN**
	Shear connection ratio	**0.697**
	Partial shear connection	**provided**
	Maximum moment	**2115 kNm**
	Moment resistance	**3579 kNm**
	Unity factor bending	**0.591 ≤ 1**
	Maximum shear force	**428 kN**
	Shear plastic resistance	**2463 kN**
	Unity factor shear	**0.174 ≤ 1**
	Deflection to span ratio	
	at final stage (G + Q)	**1: 312**
	Slab shear force	**544 kN/m**
	Slab resistance	**545 kN/m**
	Min transverse reinft.	**968 mm²/m**
	Normal weight concrete (NWC) assumed	

Stud spacing between each support and 1/3 point to be 150 mm.
The number of studs required between each support & 1/3 point is 33 No. Between 1/3 points provide nominal studs.

Location: Ex3

Composite internal beam with secondary beams located at 1/3 points to BS EN 1994-1-1:2004 the Code for the 'Design of composite steel and concrete structures'. The beam is considered to be unpropped during construction and is assumed to be simply supported.

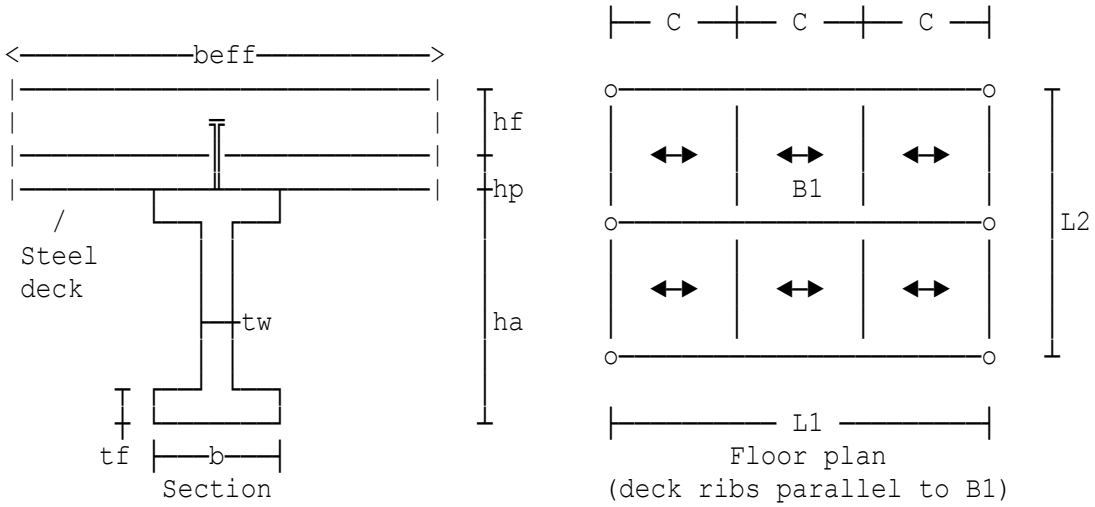

Beam span	L1=6 m
Sum of secondary beam spans	L2=15 m
Concrete density (const.stage)	D'c=19 kN/m³
Concrete density (final stage)	Dc=18 kN/m³

Deck is parallel to supporting beam and supported on secondary beams.
305 x 165 x 40 UKB
Dimensions (mm): h=303.4 b=165 tw=6 tf=10.2 r=8.9
Properties (cm): Iy=8500 Iz=764 Wply=623 Wplz=142 It=14.7

Partial safety factor (reinfnt.)	gams=1.15
Partial safety factor (concrete)	gamc=1.5
Partial safety factor (steel)	gamM0=1.0
Partial safety factor (steel)	gamM1=1.0
Partial safety factor (studs)	gamv=1.25
Permanent load (ULS)	gamG=1.25
Variable load (ULS)	gamQ=1.5

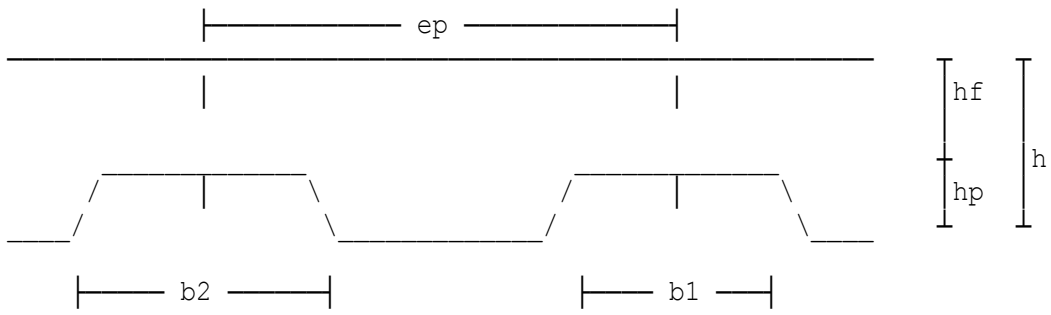

Depth of concrete above profile	hf=80 mm
Depth of profiling	hp=50 mm
Centres of profiles	ep=300 mm
Width at inside of profile	b1=125 mm
Width at outside of profile	b2=175 mm

Thickness of sheeting	tp=1.2 mm
Mean width of concrete ribs	b0=125 mm
Weight of steel decking	fsd=0.12 kN/m²
Variable load (const.stage)	fc=0.5 kN/m²
Variable load (final stage)	fi=3 kN/m²
Partition load	fp=1 kN/m²
Ceiling and services	fcs=0.25 kN/m²
Raised floor	fr=0 kN/m²
Wall or other UDL (final stage)	fw=0.5 kN/m
Self weight of secondary beam	fb=0.2 kN/m
Char yield strength of reinft.	fyk=500 N/mm²
Area of reinfnt.per shear plane	Ae=328 mm²/m

DESIGN SUMMARY	**305 x 165 x 40 UKB Grade**	**S 355**
CONSTRUCTION	**Steel yield strength**	**355 N/mm²**
STAGE	**Concrete strength**	**25 N/mm²**
	Maximum moment	**116 kNm**
	Moment resistance	**221 kNm**
	Unity factor	**0.525 ≤ 1**
	Maximum shear force	**58.4 kN**
	Shear resistance	**411 kN**
	Unity factor	**0.142 ≤ 1**
	Deflection to span ratio	
	(G + Q)	**1: 311**
DESIGN SUMMARY	**Effective width**	**1.5 m**
FINAL STAGE	**Stud shear resistance**	**72.6 kN**
	Number of studs per rib	**1 No.**
	Number of 19 mm studs	**see footnote**
	Stud spacing between	**see footnote**
	Design compressive force:	
	Concrete	**1700 kN**
	Studs	**799 kN**
	Shear connection ratio	**0.47**
	Partial shear connection	**provided**
	Maximum moment	**286 kNm**
	Moment resistance	**340 kNm**
	Unity factor bending	**0.839 ≤ 1**
	Maximum shear force	**144 kN**
	Shear plastic resistance	**411 kN**
	Unity factor shear	**0.349 ≤ 1**
	Deflection to span ratio	
	at final stage (G + Q)	**1: 247**
	Slab shear force	**202 kN/m**
	Slab resistance	**202 kN/m**
	Min transverse reinft.	**328 mm²/m**
	Lightweight concrete (LWC) assumed	

Stud spacing between each support and 1/3 point to be 180 mm.
The number of studs required between each support & 1/3 point is 11 No. Between 1/3 points provide nominal studs.

Location: Ex4 - long span with metal decking

Composite internal beam with secondary beams located at 1/3 points to BS EN 1994-1-1:2004 the Code for the 'Design of composite steel and concrete structures'. The beam is considered to be unpropped during construction and is assumed to be simply supported.

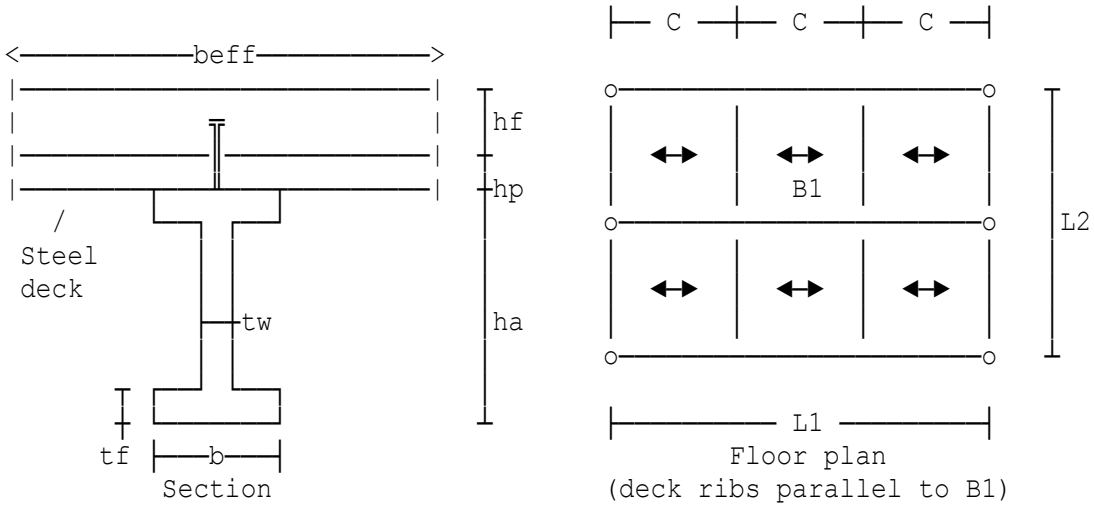

Beam span	L1=15 m
Sum of secondary beam spans	L2=15 m
Concrete density (const.stage)	D'c=26 kN/m³
Concrete density (final stage)	Dc=25 kN/m³

Deck is parallel to supporting beam and supported on secondary beams.
838 x 292 x 176 UKB
Dimensions (mm): h=834.9 b=291.7 tw=14 tf=18.8 r=17.8
Properties (cm): Iy=246000 Iz=7800 Wply=6810 Wplz=842 It=221

Partial safety factor (reinfnt.)	gams=1.15
Partial safety factor (concrete)	gamc=1.5
Partial safety factor (steel)	gamM0=1.0
Partial safety factor (steel)	gamM1=1.0
Partial safety factor (studs)	gamv=1.25
Permanent load (ULS)	gamG=1.25
Variable load (ULS)	gamQ=1.5

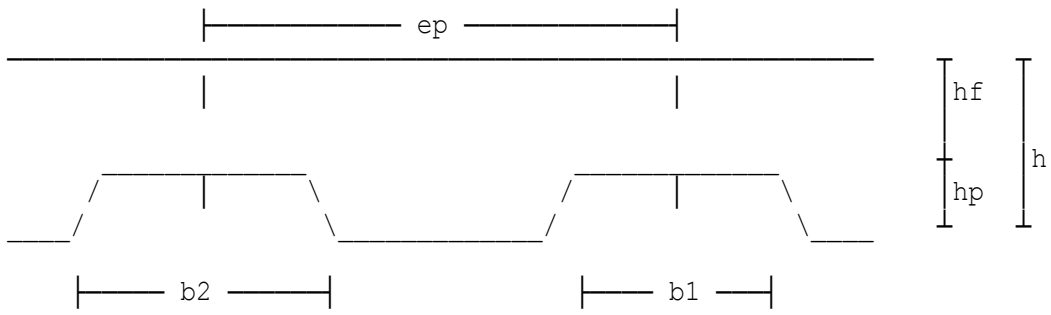

Depth of concrete above profile	hf=139 mm
Depth of profiling	hp=40 mm
Centres of profiles	ep=206 mm
Width at inside of profile	b1=78 mm
Width at outside of profile	b2=103 mm

Thickness of sheeting	tp=0.75 mm
Mean width of concrete ribs	b0=90.5 mm
Weight of steel decking	fsd=0.12 kN/m²
Variable load (const.stage)	fc=0.5 kN/m²
Variable load (final stage)	fi=3 kN/m²
Partition load	fp=1 kN/m²
Ceiling and services	fcs=0.25 kN/m²
Raised floor	fr=0 kN/m²
Wall or other UDL (final stage)	fw=0.5 kN/m
Self weight of secondary beam	fb=0.2 kN/m
Char yield strength of reinft.	fyk=500 N/mm²
Area of reinfnt.per shear plane	Ae=832 mm²/m

DESIGN SUMMARY	**838 x 292 x 176 UKB Grade S 355**	
CONSTRUCTION	**Steel yield strength**	**345 N/mm²**
STAGE	**Concrete strength**	**35 N/mm²**
	Maximum moment	**1156 kNm**
	Moment resistance	**2349 kNm**
	Unity factor	**0.492 ≤ 1**
	Buckling resistance	**2235 kNm**
	Unity factor	**0.517 ≤ 1**
	Maximum shear force	**235 kN**
	Shear resistance	**2463 kN**
	Unity factor	**0.096 ≤ 1**
	Deflection to span ratio	
	(G + Q)	**1: 357**
DESIGN SUMMARY	**Effective width**	**3.83 m**
FINAL STAGE	**Stud shear resistance**	**73.5 kN**
	Number of studs per rib	**2 No.**
	Number of 19 mm studs	**see footnote**
	Stud spacing between	**see footnote**
	Design compressive force:	
	Concrete	**7728 kN**
	Studs	**5438 kN**
	Shear connection ratio	**0.704**
	Partial shear connection	**provided**
	Maximum moment	**2180 kNm**
	Moment resistance	**3771 kNm**
	Unity factor bending	**0.578 ≤ 1**
	Maximum shear force	**441 kN**
	Shear plastic resistance	**2463 kN**
	Unity factor shear	**0.179 ≤ 1**
	Deflection to span ratio	
	at final stage (G + Q)	**1: 303**
	Slab shear force	**490 kN/m**
	Slab resistance	**490 kN/m**
	Min transverse reinft.	**832 mm²/m**
	Normal weight concrete (NWC) assumed	

Stud spacing between each support and 1/3 point to be 150 mm.
The number of studs required between each support & 1/3 point is 33 No. Between 1/3 points provide nominal studs.

Location: Ex5 - beam on grid line A3

Composite internal beam with secondary beams located at 1/3 points to BS EN 1994-1-1:2004 the Code for the 'Design of composite steel and concrete structures'. The beam is considered to be unpropped during construction and is assumed to be simply supported.

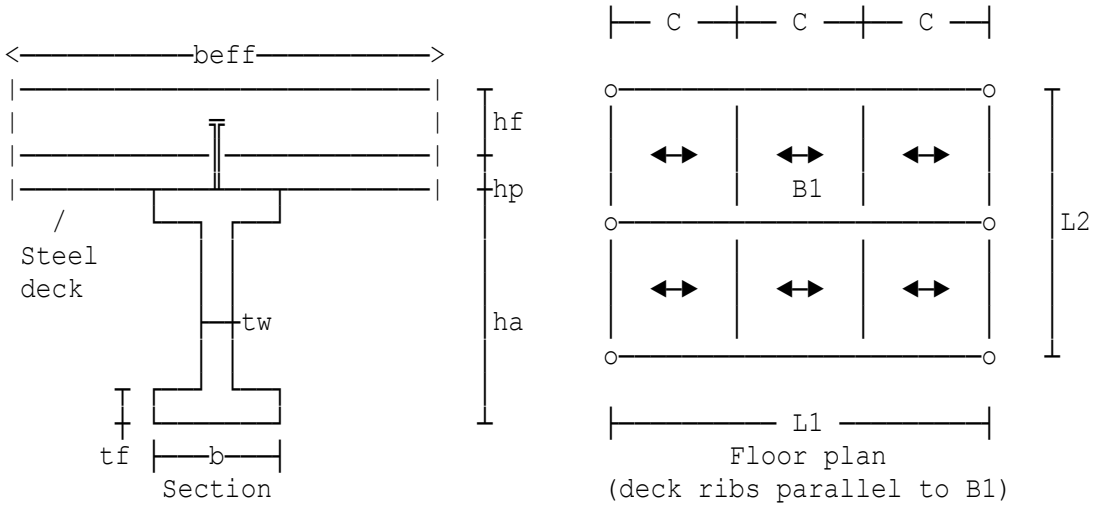

Beam span	L1=6 m
Sum of secondary beam spans	L2=15 m
Concrete density (const.stage)	D'c=19 kN/m³
Concrete density (final stage)	Dc=18 kN/m³

Deck is parallel to supporting beam and supported on secondary beams.
305 x 165 x 40 UKB
Dimensions (mm): h=303.4 b=165 tw=6 tf=10.2 r=8.9
Properties (cm): Iy=8500 Iz=764 Wply=623 Wplz=142 It=14.7

Partial safety factor (reinfnt.)	gams=1.15
Partial safety factor (concrete)	gamc=1.5
Partial safety factor (steel)	gamM0=1.0
Partial safety factor (steel)	gamM1=1.0
Partial safety factor (studs)	gamv=1.25
Permanent load (ULS)	gamG=1.25
Variable load (ULS)	gamQ=1.5

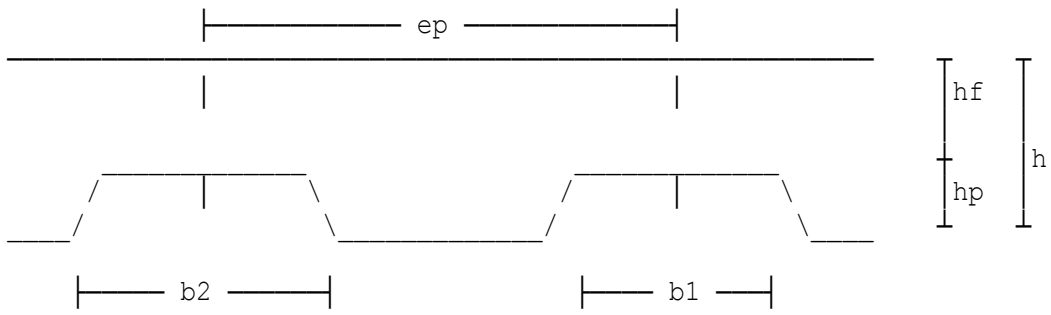

Depth of concrete above profile	hf=80 mm
Depth of profiling	hp=50 mm
Centres of profiles	ep=300 mm
Width at inside of profile	b1=125 mm
Width at outside of profile	b2=175 mm

Thickness of sheeting	tp=1.2 mm
Mean width of concrete ribs	b0=125 mm
Weight of steel decking	fsd=0.12 kN/m²
Variable load (const.stage)	fc=0.75 kN/m²
Variable load (final stage)	fi=3 kN/m²
Partition load	fp=1 kN/m²
Ceiling and services	fcs=0.25 kN/m²
Raised floor	fr=0 kN/m²
Wall or other UDL (final stage)	fw=0.5 kN/m
Self weight of secondary beam	fb=0.2 kN/m
Char yield strength of reinft.	fyk=500 N/mm²
Area of reinfnt.per shear plane	Ae=244 mm²/m

DESIGN SUMMARY	**305 x 165 x 40 UKB Grade**	**S 355**
CONSTRUCTION	**Steel yield strength**	**355 N/mm²**
STAGE	**Concrete strength**	**25 N/mm²**
	Maximum moment	**127 kNm**
	Moment resistance	**221 kNm**
	Unity factor	**0.576 ≤ 1**
	Maximum shear force	**64 kN**
	Shear resistance	**411 kN**
	Unity factor	**0.156 ≤ 1**
	Deflection to span ratio (G + Q)	**1: 287**
DESIGN SUMMARY	**Effective width**	**1.5 m**
FINAL STAGE	**Stud shear resistance**	**72.6 kN**
	Number of studs per rib	**1 No.**
	Number of 19 mm studs	**see footnote**
	Stud spacing between	**see footnote**
	Design compressive force:	
	Concrete	**1700 kN**
	Studs	**654 kN**
	Shear connection ratio	**0.385**
	Partial shear connection	**provided**
	Maximum moment	**286 kNm**
	Moment resistance	**326 kNm**
	Unity factor bending	**0.877 ≤ 1**
	Maximum shear force	**144 kN**
	Shear plastic resistance	**411 kN**
	Unity factor shear	**0.349 ≤ 1**
	Deflection to span ratio at final stage (G + Q)	**1: 193**
	Slab shear force	**165 kN/m**
	Slab resistance	**165 kN/m**
	Min transverse reinft.	**244 mm²/m**
	Lightweight concrete (LWC) assumed	

Stud spacing between each support and 1/3 point to be 220 mm.
The number of studs required between each support & 1/3 point is 9 No. Between 1/3 points provide nominal studs.

WARNING:
Total deflection exceeds L/200 the normally acceptable limit.

Location: Beam on gridline A3

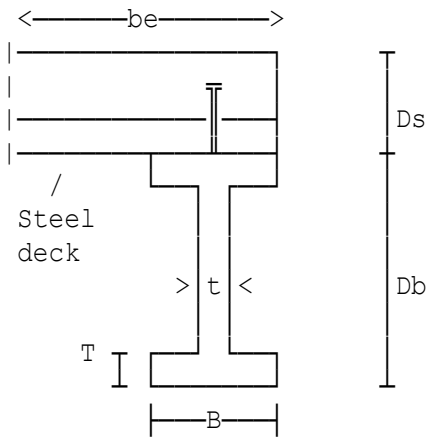

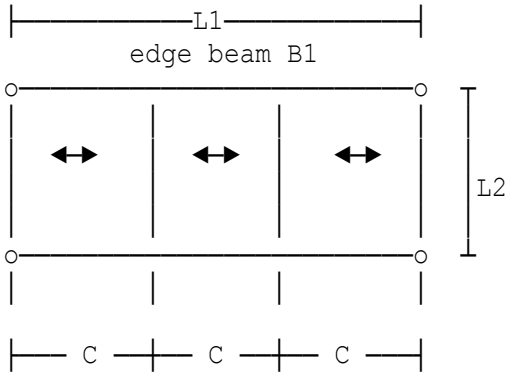

Floor plan
(deck ribs parallel to B1)

Beam span	L1=6 m
Secondary beam span	L2=6 m
Concrete cube strength	fcu=25 N/mm²
Air dry density for concrete	Dc=17.6 kN/m³
Freshwet density for concrete	D'c=18.8 kN/m³
Deck is parallel to supporting beam.	
305 x 102 x 28 UB.	
Young's Modulus	E=205 kN/mm²
Slab depth	Ds=115 mm
Depth of profiling	Dp=50 mm
Centres of profiles	Ct=300 mm
Width at inside of profile	b=125 mm
Width at outside of profile	p=175 mm
Profiled steel deck	decwt=0.12 kN/m²
Reinforcement allowance	reinwt=0.04 kN/m²
Steel beam allowance	selfwt=0.15 kN/m²
Construction load allowance	wc=0.5 kN/m²
Other UDL on beam	w'du=0.33 kN/m
Ceiling and services	wcs=0.25 kN/m²
Imposed	wi=3 kN/m²
Partitions	wp=1 kN/m²
Wall or other UDL	wdu=7.83 kN/m

Number of studs across flange nr=1
Spacing of connectors spac1=400 mm

Check on transverse reinforcement omitted.

COMPOSITE SECTION SUMMARY	**305 x 102 x 28 UB Grade S 355 with 16 No. 19 dia. stud connectors @ 375 centres. Section is satisfactory for construction, composite, elastic, plastic, moment, shear, deflection and natural frequency requirements.**
	Construction stage moment 45.313 kNm
	Steel beam mom. capacity 143.07 kNm
	Const. stage deflection 9.055 mm
	Composite stage moment 162.15 kNm
	Ultimate mom. capacity 238.69 kNm
	Vertical shear force 89.296 kN
	Ult. shear capacity 394.52 kN
	Composite stage deflection 7.1117 mm

Location: Beam on gridline A3

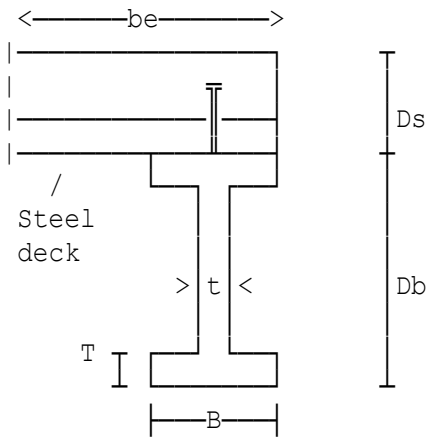

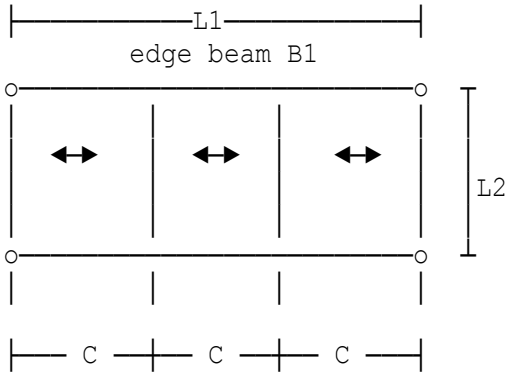

Floor plan
(deck ribs parallel to B1)

Beam span	L1=6 m
Secondary beam span	L2=6 m
Concrete cube strength	fcu=25 N/mm²
Air dry density for concrete	Dc=17.6 kN/m³
Freshwet density for concrete	D'c=18.8 kN/m³

Deck is parallel to supporting beam.
305 x 102 x 28 UB.

Young's Modulus	E=205 kN/mm²
Slab depth	Ds=115 mm
Depth of profiling	Dp=50 mm
Centres of profiles	Ct=300 mm
Width at inside of profile	b=125 mm
Width at outside of profile	p=175 mm
Profiled steel deck	decwt=0.12 kN/m²
Reinforcement allowance	reinwt=0.04 kN/m²
Steel beam allowance	selfwt=0.15 kN/m²
Construction load allowance	wc=0.5 kN/m²
Other UDL on beam	w'du=0.33 kN/m
Ceiling and services	wcs=0.25 kN/m²
Imposed	wi=3 kN/m²
Partitions	wp=1 kN/m²
Wall or other UDL	wdu=7.83 kN/m

Number of studs across flange nr=1
Spacing of connectors spac1=400 mm

Check on transverse reinforcement omitted.

COMPOSITE SECTION SUMMARY	**305 x 102 x 28 UB Grade S 355 with 16 No. 19 dia. stud connectors @ 375 centres. Section is satisfactory for construction, composite, elastic, plastic, moment, shear, deflection and natural frequency requirements.**
	Construction stage moment 45.313 kNm
	Steel beam mom. capacity 143.07 kNm
	Const. stage deflection 9.055 mm
	Composite stage moment 162.15 kNm
	Ultimate mom. capacity 238.69 kNm
	Vertical shear force 89.296 kN
	Ult. shear capacity 394.52 kN
	Composite stage deflection 7.1117 mm

Location: example 1 with fire resistance check

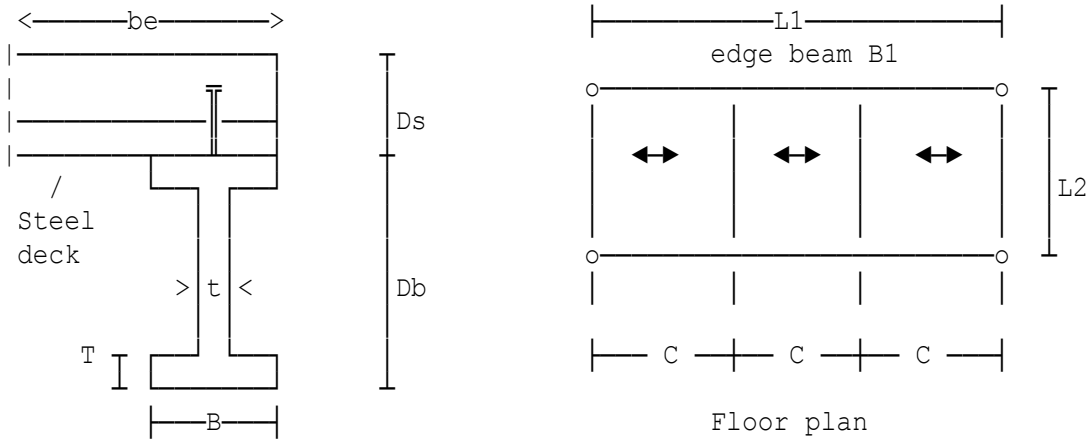

Floor plan
(deck ribs parallel to B1)

Beam span	L1=6 m
Secondary beam span	L2=6 m
Concrete cube strength	fcu=25 N/mm²
Air dry density for concrete	Dc=17.6 kN/m³
Freshwet density for concrete	D'c=18.8 kN/m³

Deck is parallel to supporting beam.
305 x 102 x 28 UB.

Young's Modulus	E=205 kN/mm²
Slab depth	Ds=115 mm
Depth of profiling	Dp=50 mm
Centres of profiles	Ct=300 mm
Width at inside of profile	b=125 mm
Width at outside of profile	p=175 mm
Profiled steel deck	decwt=0.12 kN/m²
Reinforcement allowance	reinwt=0.04 kN/m²
Steel beam allowance	selfwt=0.15 kN/m²
Construction load allowance	wc=0.5 kN/m²
Other UDL on beam	w'du=0.33 kN/m
Ceiling and services	wcs=0.25 kN/m²
Imposed	wi=3 kN/m²
Partitions	wp=1 kN/m²
Wall or other UDL	wdu=7.83 kN/m

Number of studs across flange nr=1
Spacing of connectors spac1=400 mm

Check on transverse reinforcement omitted.

Total permanent load Vfp=18 kN

COMPOSITE SECTION SUMMARY	**305 x 102 x 28 UB Grade S 355 with 16 No. 19 dia. stud connectors @ 375 centres. Section is satisfactory for construction, composite, elastic, plastic, moment, shear, deflection and natural frequency requirements.**	
	Construction stage moment	**45.313 kNm**
	Steel beam mom. capacity	**143.07 kNm**
	Const. stage deflection	**9.055 mm**
	Composite stage moment	**162.15 kNm**
	Ultimate mom. capacity	**238.69 kNm**
	Vertical shear force	**89.296 kN**
	Ult. shear capacity	**394.52 kN**
	Composite stage deflection	**7.1117 mm**
FIRE RESISTANCE SUMMARY	**Exposed surface area**	**910.8 mm²**
	Area of section	**35.9 cm²**
	Section factor	**250 /m**
	Load Ratio (R)	**0.44644**
	Section does not have an inherent fire resistance of 30 minutes. Fire protection should be provided	

Location: Ex1 - Beam on grid line A3

Composite edge beam with secondary beams located at 1/3 points. Design to BS EN 1994-1-1:2004 the Code for the 'Design of composite steel and and concrete structures'. The beam is unpropped during construction and is assumed to be simply supported.

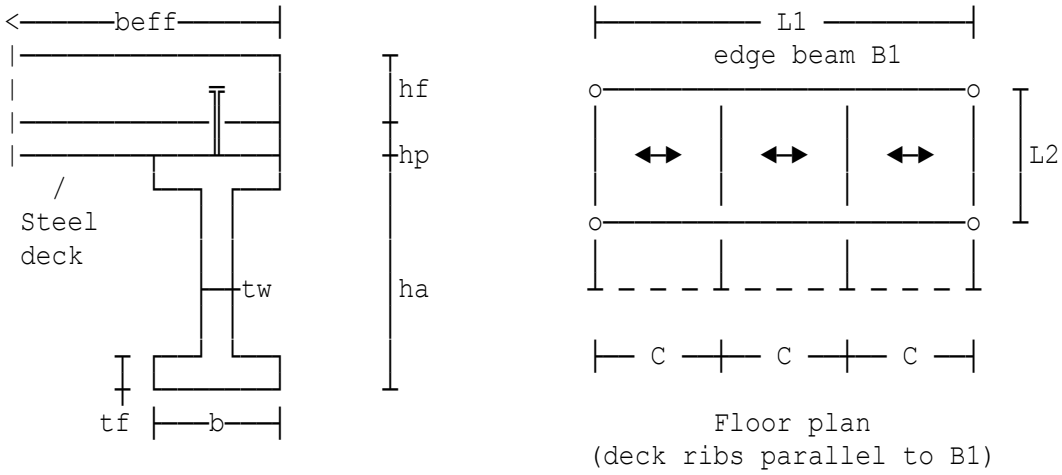

Beam span	L1=6 m
Secondary beam span	L2=6 m
Concrete density (const.stage)	D'c=19 kN/m³
Concrete density (final stage)	Dc=18 kN/m³

Deck is parallel to supporting beam and supported on secondary beams.
305 x 102 x 28 UKB
Dimensions (mm): h=308.7 b=101.8 tw=6 tf=8.8 r=7.6
Properties (cm): Iy=5370 Iz=155 Wply=403 Wplz=48.5 It=7.4

Partial safety factor (reinfnt.)	gams=1.15
Partial safety factor (concrete)	gamc=1.5
Partial safety factor (steel)	gamM0=1.0
Partial safety factor (steel)	gamM1=1.0
Partial safety factor (studs)	gamv=1.25
Permanent load (ULS)	gamG=1.25
Variable load (ULS)	gamQ=1.5

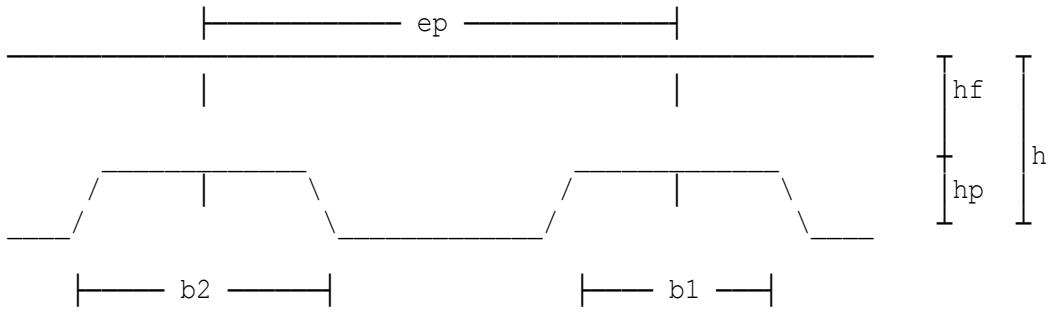

Depth of concrete above profile	hf=80 mm
Depth of profiling	hp=50 mm
Centres of profiles	ep=300 mm
Width at inside of profile	b1=125 mm
Width at outside of profile	b2=175 mm
Thickness of sheeting	tp=1.2 mm

Mean width of concrete ribs	b0=125 mm
Weight of steel decking	fsd=0.12 kN/m²
Variable load (const.stage)	fc=0.75 kN/m²
Variable load (final stage)	fi=3 kN/m²
Partition load	fp=1 kN/m²
Ceiling and services	fcs=0.25 kN/m²
Raised floor	fr=0 kN/m²
Wall or other UDL (final stage)	fw=7.83 kN/m
Self weight of secondary beam	fb=0.2 kN/m
Char yield strength of reinft.	fyk=500 N/mm²
Area of reinfnt.per shear plane	Ae=371 mm²/m

DESIGN SUMMARY	**305 x 102 x 28 UKB Grade**	**S 355**
CONSTRUCTION	**Steel yield strength**	**355 N/mm²**
STAGE	**Concrete strength**	**25 N/mm²**
	Maximum moment	**51.6 kNm**
	Moment resistance	**143 kNm**
	Unity factor	**0.361 ≤ 1**
	Buckling resistance	**129 kNm**
	Unity factor	**0.401 ≤ 1**
	Maximum shear force	**26 kN**
	Shear resistance	**407 kN**
	Unity factor	**0.064 ≤ 1**
	Deflection to span ratio	
	(G + Q)	**1: 447**
DESIGN SUMMARY	**Effective width**	**0.75 m**
FINAL STAGE	**Stud shear resistance**	**72.6 kN**
	Number of studs per rib	**1 No.**
	Number of 19 mm studs	**see footnote**
	Stud spacing between	**see footnote**
	Design compressive force:	
	Concrete	**850 kN**
	Studs	**436 kN**
	Shear connection ratio	**0.513**
	Partial shear connection	**provided**
	Maximum moment	**158 kNm**
	Moment resistance	**226 kNm**
	Unity factor bending	**0.698 ≤ 1**
	Maximum shear force	**86.5 kN**
	Shear plastic resistance	**407 kN**
	Unity factor shear	**0.213 ≤ 1**
	Deflection to span ratio	
	at final stage (G + Q)	**1: 316**
	Slab shear force	**220 kN/m**
	Slab resistance	**221 kN/m**
	Min transverse reinft.	**371 mm²/m**
	Lightweight concrete (LWC)	**assumed**

Stud spacing between each support and 1/3 point to be 330 mm.
The number of studs required between each support & 1/3 point is 6 No. Between 1/3 points provide nominal studs.

Location: Ex2

Composite edge beam with secondary beams located at 1/3 points. Design to BS EN 1994-1-1:2004 the Code for the 'Design of composite steel and and concrete structures'. The beam is unpropped during construction and is assumed to be simply supported.

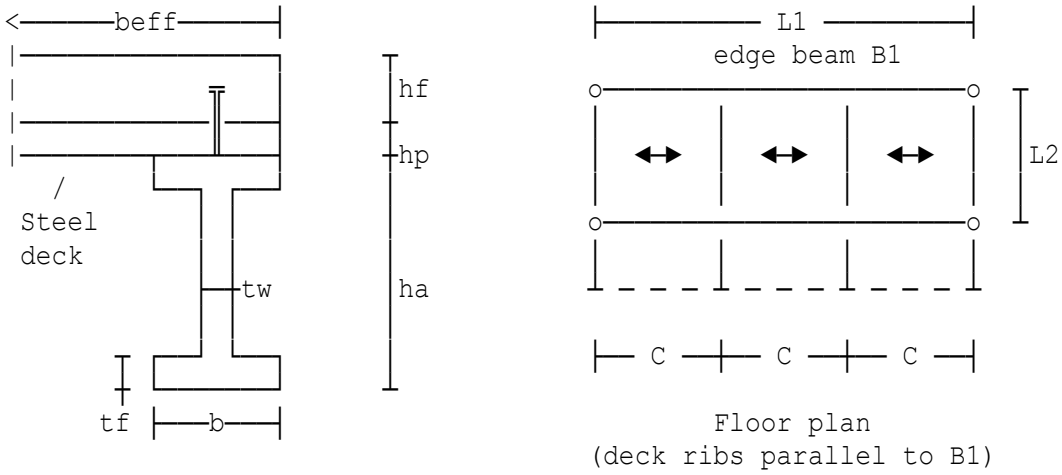

Beam span	L1=6 m
Secondary beam span	L2=6 m
Concrete density (const.stage)	D'c=19 kN/m³
Concrete density (final stage)	Dc=18 kN/m³

Deck is parallel to supporting beam and supported on secondary beams.
305 x 102 x 28 UKB
Dimensions (mm): h=308.7 b=101.8 tw=6 tf=8.8 r=7.6
Properties (cm): Iy=5370 Iz=155 Wply=403 Wplz=48.5 It=7.4

Partial safety factor (reinfnt.)	gams=1.15
Partial safety factor (concrete)	gamc=1.5
Partial safety factor (steel)	gamM0=1.0
Partial safety factor (steel)	gamM1=1.0
Partial safety factor (studs)	gamv=1.25
Permanent load (ULS)	gamG=1.25
Variable load (ULS)	gamQ=1.5

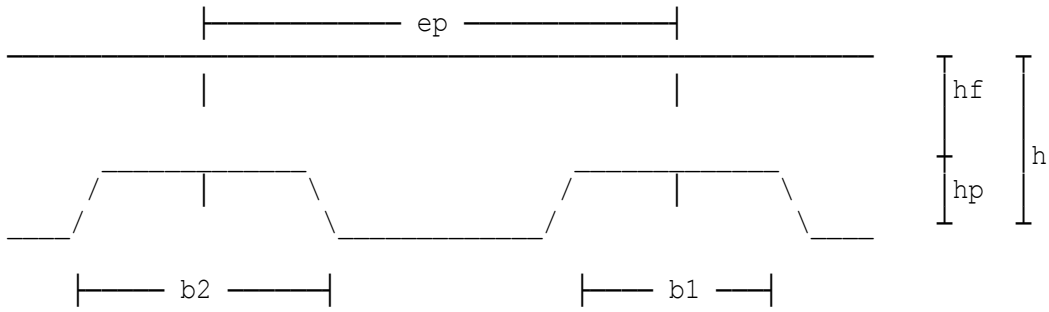

Depth of concrete above profile	hf=80 mm
Depth of profiling	hp=50 mm
Centres of profiles	ep=300 mm
Width at inside of profile	b1=125 mm
Width at outside of profile	b2=175 mm
Thickness of sheeting	tp=1.2 mm

Mean width of concrete ribs	b0=125 mm
Weight of steel decking	fsd=0.12 kN/m²
Variable load (const.stage)	fc=0.5 kN/m²
Variable load (final stage)	fi=3 kN/m²
Partition load	fp=1 kN/m²
Ceiling and services	fcs=0.25 kN/m²
Raised floor	fr=0 kN/m²
Wall or other UDL (final stage)	fw=7.83 kN/m
Self weight of secondary beam	fb=0.2 kN/m
Char yield strength of reinft.	fyk=500 N/mm²
Area of reinfnt.per shear plane	Ae=371 mm²/m

DESIGN SUMMARY	**305 x 102 x 28 UKB Grade**	**S 355**
CONSTRUCTION	**Steel yield strength**	**355 N/mm²**
STAGE	**Concrete strength**	**25 N/mm²**
	Maximum moment	**47.1 kNm**
	Moment resistance	**143 kNm**
	Unity factor	**0.329 ≤ 1**
	Buckling resistance	**129 kNm**
	Unity factor	**0.366 ≤ 1**
	Maximum shear force	**23.8 kN**
	Shear resistance	**407 kN**
	Unity factor	**0.058 ≤ 1**
	Deflection to span ratio	
	(G + Q)	**1: 484**
DESIGN SUMMARY	**Effective width**	**0.75 m**
FINAL STAGE	**Stud shear resistance**	**72.6 kN**
	Number of studs per rib	**1 No.**
	Number of 19 mm studs	**see footnote**
	Stud spacing between	**see footnote**
	Design compressive force:	
	Concrete	**850 kN**
	Studs	**436 kN**
	Shear connection ratio	**0.513**
	Partial shear connection	**provided**
	Maximum moment	**158 kNm**
	Moment resistance	**226 kNm**
	Unity factor bending	**0.698 ≤ 1**
	Maximum shear force	**86.5 kN**
	Shear plastic resistance	**407 kN**
	Unity factor shear	**0.213 ≤ 1**
	Deflection to span ratio	
	at final stage (G + Q)	**1: 316**
	Slab shear force	**220 kN/m**
	Slab resistance	**221 kN/m**
	Min transverse reinft.	**371 mm²/m**
	Lightweight concrete (LWC)	**assumed**

Stud spacing between each support and 1/3 point to be 330 mm.
The number of studs required between each support & 1/3 point is 6 No. Between 1/3 points provide nominal studs.

Location: Ex3

Composite edge beam with secondary beams located at 1/3 points. Design to BS EN 1994-1-1:2004 the Code for the 'Design of composite steel and and concrete structures'. The beam is unpropped during construction and is assumed to be simply supported.

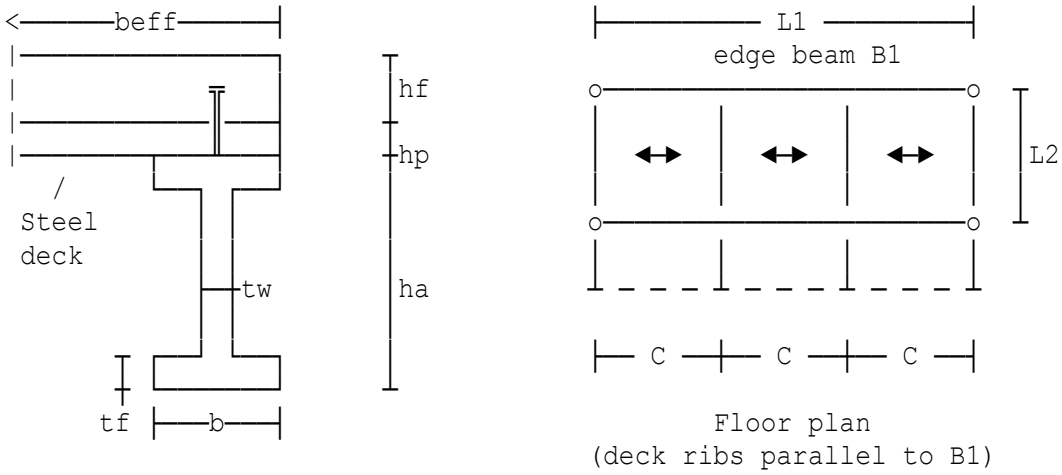

Beam span	L1=6 m
Secondary beam span	L2=6 m
Concrete density (const.stage)	D'c=19 kN/m³
Concrete density (final stage)	Dc=18 kN/m³

Deck is parallel to supporting beam and supported on secondary beams.
305 x 102 x 28 UKB
Dimensions (mm): h=308.7 b=101.8 tw=6 tf=8.8 r=7.6
Properties (cm): Iy=5370 Iz=155 Wply=403 Wplz=48.5 It=7.4

Partial safety factor (reinfnt.)	gams=1.15
Partial safety factor (concrete)	gamc=1.5
Partial safety factor (steel)	gamM0=1.0
Partial safety factor (steel)	gamM1=1.0
Partial safety factor (studs)	gamv=1.25
Permanent load (ULS)	gamG=1.25
Variable load (ULS)	gamQ=1.5

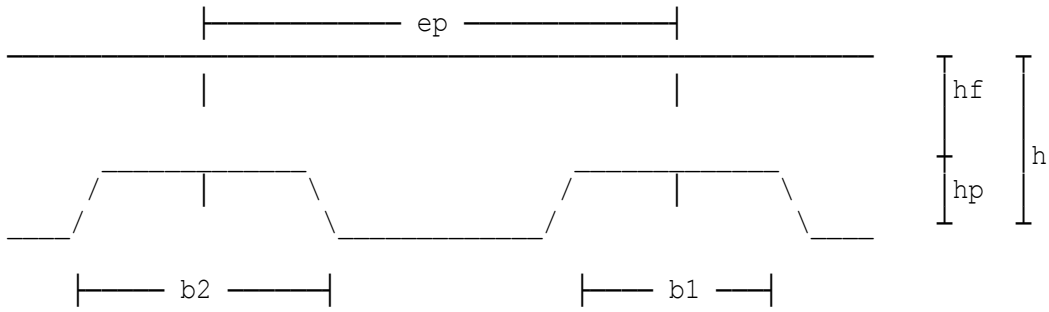

Depth of concrete above profile	hf=80 mm
Depth of profiling	hp=50 mm
Centres of profiles	ep=300 mm
Width at inside of profile	b1=125 mm
Width at outside of profile	b2=175 mm
Thickness of sheeting	tp=1.2 mm

Mean width of concrete ribs	b0=125 mm
Weight of steel decking	fsd=0.12 kN/m²
Variable load (const.stage)	fc=0.5 kN/m²
Variable load (final stage)	fi=3 kN/m²
Partition load	fp=1 kN/m²
Ceiling and services	fcs=0.25 kN/m²
Raised floor	fr=0 kN/m²
Wall or other UDL (final stage)	fw=7.83 kN/m
Self weight of secondary beam	fb=0.2 kN/m
Char yield strength of reinft.	fyk=500 N/mm²
Area of reinfnt.per shear plane	Ae=371 mm²/m

DESIGN SUMMARY	**305 x 102 x 28 UKB Grade**	**S 355**
CONSTRUCTION	**Steel yield strength**	**355 N/mm²**
STAGE	**Concrete strength**	**25 N/mm²**
	Maximum moment	**47.1 kNm**
	Moment resistance	**143 kNm**
	Unity factor	**0.329 ≤ 1**
	Buckling resistance	**129 kNm**
	Unity factor	**0.366 ≤ 1**
	Maximum shear force	**23.8 kN**
	Shear resistance	**407 kN**
	Unity factor	**0.058 ≤ 1**
	Deflection to span ratio	
	(G + Q)	**1: 484**
DESIGN SUMMARY	**Effective width**	**0.75 m**
FINAL STAGE	**Stud shear resistance**	**72.6 kN**
	Number of studs per rib	**1 No.**
	Number of 19 mm studs	**see footnote**
	Stud spacing between	**see footnote**
	Design compressive force:	
	Concrete	**850 kN**
	Studs	**436 kN**
	Shear connection ratio	**0.513**
	Partial shear connection	**provided**
	Maximum moment	**158 kNm**
	Moment resistance	**226 kNm**
	Unity factor bending	**0.698 ≤ 1**
	Maximum shear force	**86.5 kN**
	Shear plastic resistance	**407 kN**
	Unity factor shear	**0.213 ≤ 1**
	Deflection to span ratio	
	at final stage (G + Q)	**1: 316**
	Slab shear force	**220 kN/m**
	Slab resistance	**221 kN/m**
	Min transverse reinft.	**371 mm²/m**
	Lightweight concrete (LWC)	**assumed**

Stud spacing between each support and 1/3 point to be 330 mm.
The number of studs required between each support & 1/3 point is 6 No. Between 1/3 points provide nominal studs.

Location: Ex4 - solid slab

Composite edge beam with secondary beams located at 1/3 points. Design to BS EN 1994-1-1:2004 the Code for the 'Design of composite steel and and concrete structures'. The beam is unpropped during construction and is assumed to be simply supported.

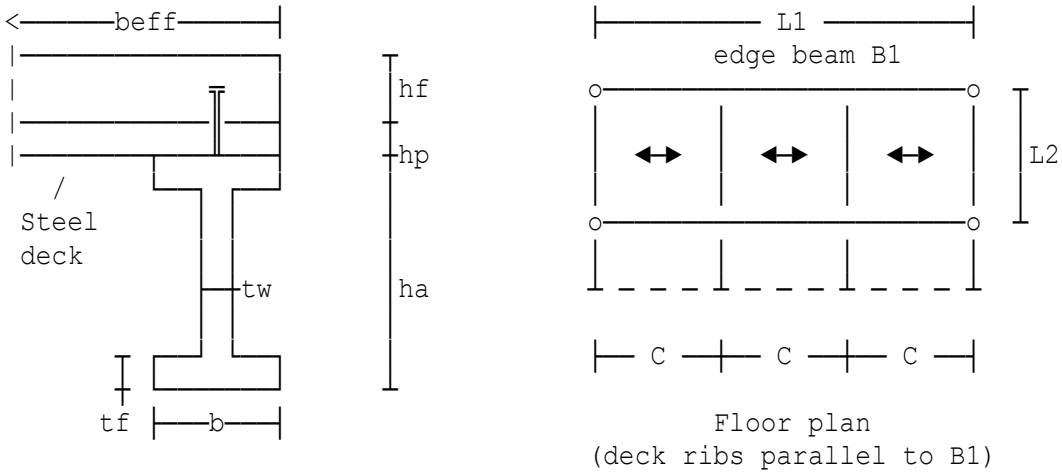

Beam span	L1=6 m
Secondary beam span	L2=6 m
Concrete density (const.stage)	D'c=19 kN/m³
Concrete density (final stage)	Dc=18 kN/m³

305 x 102 x 28 UKB
Dimensions (mm): h=308.7 b=101.8 tw=6 tf=8.8 r=7.6
Properties (cm): Iy=5370 Iz=155 Wply=403 Wplz=48.5 It=7.4

Partial safety factor (reinfnt.)	gams=1.15
Partial safety factor (concrete)	gamc=1.5
Partial safety factor (steel)	gamM0=1.0
Partial safety factor (steel)	gamM1=1.0
Partial safety factor (studs)	gamv=1.25
Permanent load (ULS)	gamG=1.25
Variable load (ULS)	gamQ=1.5
Variable load (const.stage)	fc=0.5 kN/m²
Variable load (final stage)	fi=3 kN/m²
Partition load	fp=1 kN/m²
Ceiling and services	fcs=0.25 kN/m²
Raised floor	fr=0 kN/m²
Wall or other UDL (final stage)	fw=7.83 kN/m
Self weight of secondary beam	fb=0.2 kN/m
Char yield strength of reinft.	fyk=500 N/mm²
Governing shear length	hf=150 mm
Area of reinfnt.per shear plane	Ae=505 mm²/m

DESIGN SUMMARY	**305 x 102 x 28 UKB Grade**	**S 355**
CONSTRUCTION	**Steel yield strength**	**355 N/mm²**
STAGE	**Concrete strength**	**25 N/mm²**
	Maximum moment	**59.5 kNm**
	Moment resistance	**143 kNm**
	Unity factor	**0.416 ≤ 1**
	Buckling resistance	**129 kNm**
	Unity factor	**0.463 ≤ 1**
	Maximum shear force	**30 kN**
	Shear resistance	**407 kN**
	Unity factor	**0.074 ≤ 1**
	Deflection to span ratio	
	(G + Q)	**1: 380**
DESIGN SUMMARY	**Effective width**	**0.75 m**
FINAL STAGE	**Stud shear resistance**	**72.6 kN**
	Number of 19 mm studs	**see footnote**
	Stud spacing between	**see footnote**
	Design compressive force:	
	Concrete	**1275 kN**
	Studs	**654 kN**
	Shear connection ratio	**0.513**
	Partial shear connection	**provided**
	Maximum moment	**170 kNm**
	Moment resistance	**240 kNm**
	Unity factor bending	**0.708 ≤ 1**
	Maximum shear force	**92.8 kN**
	Shear plastic resistance	**407 kN**
	Unity factor shear	**0.228 ≤ 1**
	Deflection to span ratio	
	at final stage (G + Q)	**1: 283**
	Slab shear force	**330 kN/m**
	Slab resistance	**331 kN/m**
	Min transverse reinft.	**505 mm²/m**
	Lightweight concrete (LWC) assumed	

Stud spacing between each support and 1/3 point to be 220 mm.
The number of studs required between each support & 1/3 point is 9 No. Between 1/3 points provide nominal studs.

Location: Ex5 - Beam on grid line A3

Composite edge beam with secondary beams located at 1/3 points. Design to BS EN 1994-1-1:2004 the Code for the 'Design of composite steel and and concrete structures'. The beam is unpropped during construction and is assumed to be simply supported.

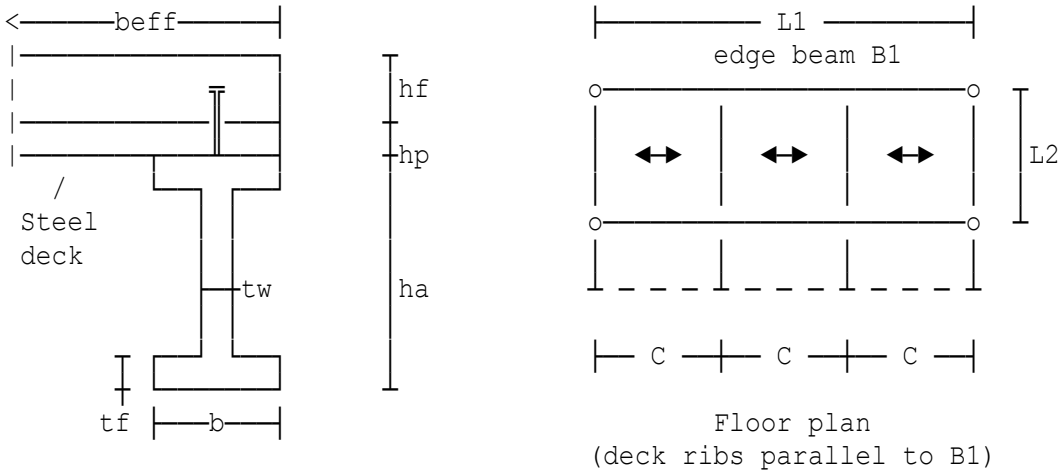

Beam span	L1=6 m
Secondary beam span	L2=6 m
Concrete density (const.stage)	D'c=19 kN/m³
Concrete density (final stage)	Dc=18 kN/m³

Deck is parallel to supporting beam and supported on secondary beams.
305 x 102 x 28 UKB
Dimensions (mm): h=308.7 b=101.8 tw=6 tf=8.8 r=7.6
Properties (cm): Iy=5370 Iz=155 Wply=403 Wplz=48.5 It=7.4

Partial safety factor (reinfnt.)	gams=1.15
Partial safety factor (concrete)	gamc=1.5
Partial safety factor (steel)	gamM0=1.0
Partial safety factor (steel)	gamM1=1.0
Partial safety factor (studs)	gamv=1.25
Permanent load (ULS)	gamG=1.25
Variable load (ULS)	gamQ=1.5

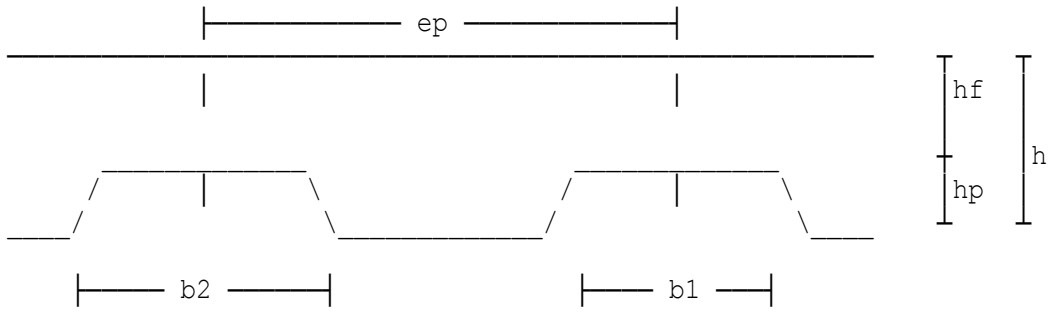

Depth of concrete above profile	hf=80 mm
Depth of profiling	hp=50 mm
Centres of profiles	ep=300 mm
Width at inside of profile	b1=125 mm
Width at outside of profile	b2=175 mm
Thickness of sheeting	tp=1.2 mm

Mean width of concrete ribs	b0=125 mm
Weight of steel decking	fsd=0.12 kN/m²
Variable load (const.stage)	fc=0.75 kN/m²
Variable load (final stage)	fi=3 kN/m²
Partition load	fp=1 kN/m²
Ceiling and services	fcs=0.25 kN/m²
Raised floor	fr=0 kN/m²
Wall or other UDL (final stage)	fw=7.83 kN/m
Self weight of secondary beam	fb=0.2 kN/m
Char yield strength of reinft.	fyk=500 N/mm²
Area of reinfnt.per shear plane	Ae=198 mm²/m

DESIGN SUMMARY	**305 x 102 x 28 UKB Grade**	**S 355**
CONSTRUCTION	**Steel yield strength**	**355 N/mm²**
STAGE	**Concrete strength**	**25 N/mm²**
	Maximum moment	**51.6 kNm**
	Moment resistance	**143 kNm**
	Unity factor	**0.361 ≤ 1**
	Buckling resistance	**129 kNm**
	Unity factor	**0.401 ≤ 1**
	Maximum shear force	**26 kN**
	Shear resistance	**407 kN**
	Unity factor	**0.064 ≤ 1**
	Deflection to span ratio	
	(G + Q)	**1: 447**
DESIGN SUMMARY	**Effective width**	**0.75 m**
FINAL STAGE	**Stud shear resistance**	**72.6 kN**
	Number of studs per rib	**1 No.**
	Number of 19 mm studs	**see footnote**
	Stud spacing between	**see footnote**
	Design compressive force:	
	Concrete	**850 kN**
	Studs	**291 kN**
	Shear connection ratio	**0.342**
	Partial shear connection	**provided**
	Maximum moment	**158 kNm**
	Moment resistance	**203 kNm**
	Unity factor bending	**0.778 ≤ 1**
	Maximum shear force	**86.5 kN**
	Shear plastic resistance	**407 kN**
	Unity factor shear	**0.213 ≤ 1**
	Deflection to span ratio	
	at final stage (G + Q)	**1: 261**
	Slab shear force	**145 kN/m**
	Slab resistance	**145 kN/m**
	Min transverse reinft.	**198 mm²/m**
	Lightweight concrete (LWC)	**assumed**

Stud spacing between each support and 1/3 point to be 500 mm.
The number of studs required between each support & 1/3 point is 4 No. Between 1/3 points provide nominal studs.

Location: Ex1 - Example in SCI publication P360 Section 4

Lateral restraint from steel decking - construction phase

The following calculations are in accordance with EC3 Parts 1-1, 1-3 and SCI P360 entitled 'Stability of Steel Beams and Columns'. The objective is to investigate whether during the construction phase (prior to concrete hardening), the steel decking offers sufficient lateral restraint to the beams such that the beams may be considered as fully restraint against lateral torsional buckling.

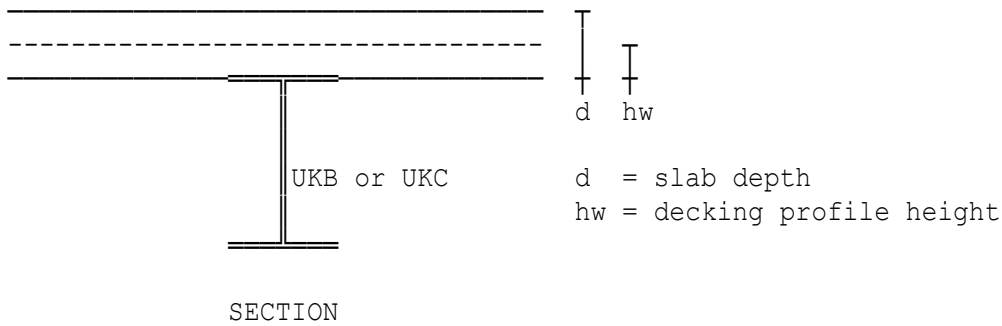

Design assumptions:

- the steel decking is perpendicular to the beam span and is attached at every rib to the top flange of beams
- the composite floor system comprises trapezoidal steel decking and an in-situ cast concrete
- more than two equally spaced beams are present.

Beam span	L=8000 mm
Length of sheeting ⊥ to beams	br=6000 mm (overall length)
Steel decking thickness	t=1 mm
Decking profile height	hw=60 mm

254 x 102 x 22 UKB
Dimensions (mm): h=254 b=101.6 tw=5.7 tf=6.8 r=7.6
Properties (cm): Iy=2840 Iz=119 Wply=259 Wplz=37.3 It=4.15

Available sheeting stiffness - BS EN 1993-1-3, Clause 10.1.1(10)

The shear stiffness of trapezoidal sheeting is given by:

```
S=1000*(t)^3*(50+10*(br)^0.3333)*s/(hw*1000)
 =11583 kN per unit length
```

As S ≥ Sreq (11583 kN ≥ 4960.4 kN), the floor beams may be considered to be laterally restrained by the sheeting during construction phase and therefore the beam may be assumed to me laterally restrained.

UNIVERSAL BEAM	**254 x 102 x 22 UKB**	
	Beam span	**8000 mm**
	Length of sheeting ⊥ to beams	**6000 mm**
DESIGN	**Beam spacing**	**3000 mm**
SUMMARY	**Decking thickness**	**1 mm**
	Decking profile height	**60 mm**
	Required sheeting stiffness	**4960 kN**
	Available sheeting stiffness	**11583 kN**

NOTE: The steel decking is perpendicular to the beam span and is attached at every rib to the top flange of beams. The composite floor system comprises trapezoidal steel decking and an in-situ cast concrete.

Location: First floor - Small UB

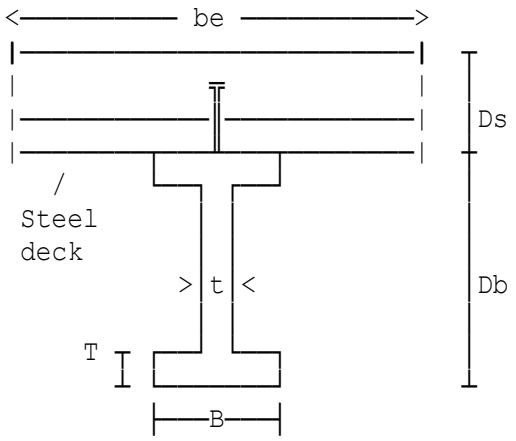

Composite steel deck floor

Section properties

Calculations in accordance with the 'Design recommendations for composite floors and beams using steel decks' published by the Steel Construction Institute in October 83.

Effective width of comp. flange	be=1500 mm
Concrete cube strength	fcu=25 N/mm²
Air dry density for concrete	Dc=17.6 kN/m³
Modular ratio for steel/concrete	ALPe=21
305 x 102 x 33 UB.	
Young's Modulus	E=205 kN/mm²
Slab depth	Ds=115 mm
Depth of profiling	Dp=50 mm

SECTION SUMMARY	**305 x 102 x 33 UB Grade S 355**	
	Slab depth	**115 mm**
	Depth of profiling	**50 mm**
	Effective width of comp. flange	**1500 mm**
	Concrete cube strength	**25 N/mm²**
	Modular ratio for steel/concrete	**21**
	Ultimate moment of resistance	**321.47 kNm**
	Web shear capacity	**439.59 kN**
	2nd mom of area of comp.section	**19212 cm⁴**
	Elastic moduli of composite section	
	Bottom of steel beam flange	**681.19 cm³**
	Top of concrete slab	**27699 cm³**

Location: First floor - Large UB

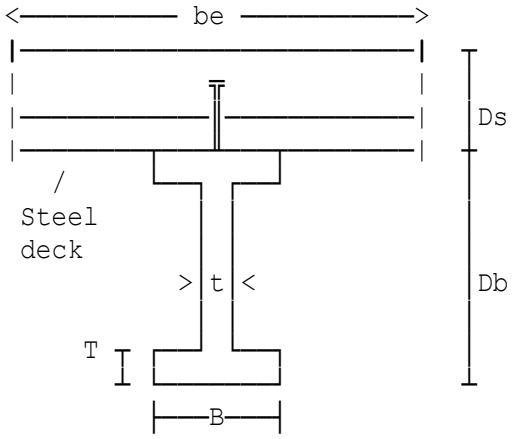

Composite steel deck floor

Section properties

Calculations in accordance with the 'Design recommendations for composite floors and beams using steel decks' published by the Steel Construction Institute in October 83.

Effective width of comp. flange	be=1800 mm
Concrete cube strength	fcu=25 N/mm²
Air dry density for concrete	Dc=17.6 kN/m³
Modular ratio for steel/concrete	ALPe=21
610 x 229 x 113 UB.	
Young's Modulus	E=205 kN/mm²
Slab depth	Ds=150 mm
Depth of profiling	Dp=0 mm

SECTION SUMMARY	**610 x 229 x 113 UB Grade S 355**	
	Slab depth	**150 mm**
	Depth of profiling	**0 mm**
	Effective width of comp. flange	**1800 mm**
	Concrete cube strength	**25 N/mm²**
	Modular ratio for steel/concrete	**21**
	Ultimate moment of resistance	**1725.3 kNm**
	Web shear capacity	**1396.1 kN**
	2nd mom of area of comp.section	**187175 cm⁴**
	Elastic moduli of composite section	
	Bottom of steel beam flange	**3879.4 cm³**
	Top of concrete slab	**142871 cm³**

Location: Small UB with metal decking

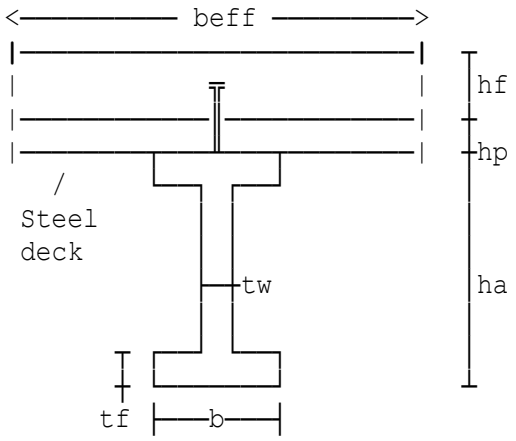

Composite steel deck floor

Section properties

Calculations are in accordance with BS EN 1994-1-1-:2004 the Code for 'Design of composite steel and concrete structures' Part 1-1: General rules & rules for buildings.

Effective width of comp. flange beff=1500 mm
Concrete density (final stage) Dc=18 kN/m³
305 x 102 x 33 UKB
Dimensions (mm): h=312.7 b=102.4 tw=6.6 tf=10.8 r=7.6
Properties (cm): Iy=6500 Iz=194 Wply=481 Wplz=60 It=12.2
Depth of concrete above profile hf=65 mm
Depth of profiling hp=50 mm

SECTION	**305 x 102 x 33 UB Grade S 355**	
SUMMARY	**Overall slab depth**	**115 mm**
	Depth of profiling	**50 mm**
	Effective width of comp.flange	**1500 mm**
	Char.cylinder comp.strength	**25 N/mm²**
	Modular ratio for steel/concrete	**13.96**
	Plastic moment of resistance	**343.31 kNm**
	Shear plastic resistance	**451.65 kN**
	2nd mom of area of comp.section	**21664 cm⁴**
	Elastic moduli of comp.section:	
	(1) Bottom of steel beam flange	**708.51 cm³**
	(2) Top of concrete slab	**24804 cm³**
	Lightweight concrete (LWC) assumed	

Location: Large UB with solid slab

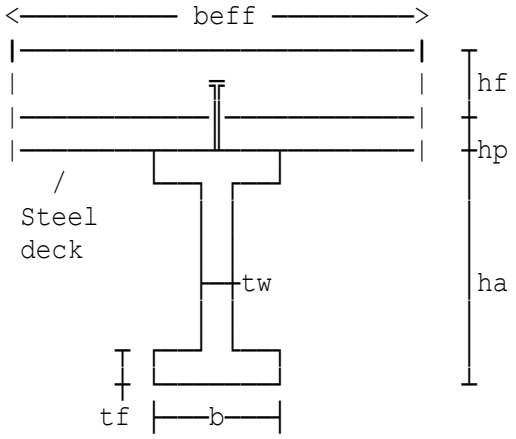

Composite steel deck floor

Section properties

Calculations are in accordance with BS EN 1994-1-1-:2004 the Code for 'Design of composite steel and concrete structures' Part 1-1: General rules & rules for buildings.

Effective width of comp. flange beff=1800 mm
Concrete density (final stage) Dc=17.6 kN/m³
610 x 229 x 113 UKB
Dimensions (mm): h=607.6 b=228.2 tw=11.1 tf=17.3 r=12.7
Properties (cm): Iy=87300 Iz=3430 Wply=3280 Wplz=469 It=111

SECTION	**610 x 229 x 113 UB Grade S 355**	
SUMMARY	**Overall slab depth**	**150 mm**
	Effective width of comp.flange	**1800 mm**
	Char.cylinder comp.strength	**25 N/mm²**
	Modular ratio for steel/concrete	**17.037**
	Plastic moment of resistance	**1777.3 kNm**
	Shear plastic resistance	**1421.3 kN**
	2nd mom of area of comp.section	**198530 cm⁴**
	Elastic moduli of comp.section:	
	(1) Bottom of steel beam flange	**3952.7 cm³**
	(2) Top of concrete slab	**132466 cm³**
	Lightweight concrete (LWC) assumed	

Location: Example 1 - Universal beam example

Calculations in accordance with BS5950 Part3 Section3.1 the 'Code of practice for design of simple and continuous composite beams' July 1990.

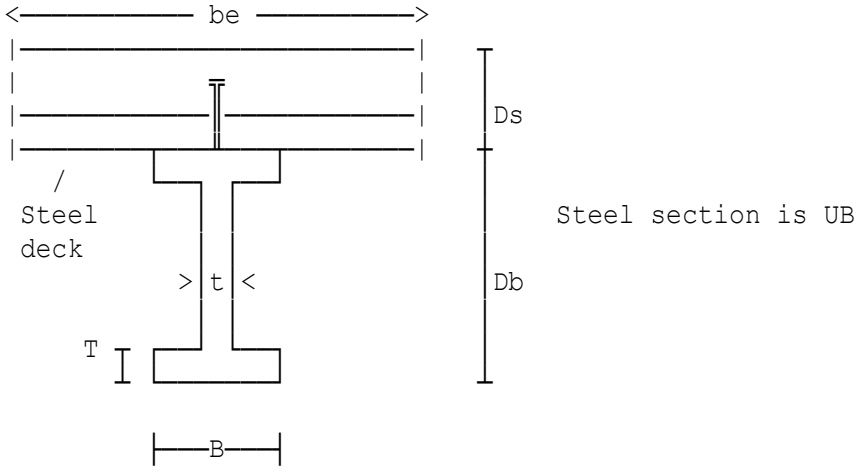

Steel section is UB

Beam is an internal beam.

Factored B.M. in compos.stage	Mcom=320 kNm
Design ultimate shear	Vr=200 kN
Beam span	L1=6 m
Beam centres	L2=3 m
Concrete cube strength	fcu=25 N/mm²
Air dry density for concrete	Dc=17.6 kN/m³
Freshwet density for concrete	D'c=18.8 kN/m³
Deck spans onto supporting beam.	
Modular ratio for steel/concrete	ALPe=15
305 x 165 x 40 UB.	
Young's Modulus	E=205 kN/mm²

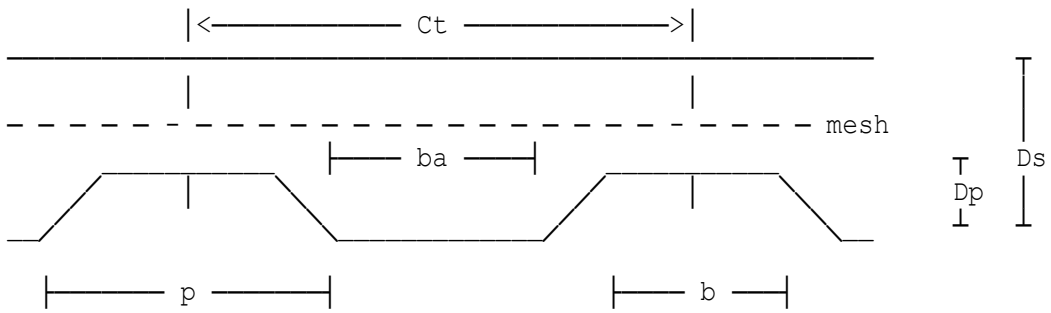

Slab depth	Ds=115 mm
Centres of profiles	Ct=300 mm
Depth of profiling	Dp=50 mm
Width at inside of profile	b=125 mm
Width at outside of profile	p=175 mm

Composite beam deflection (SLS) DELf=6 mm
Number of studs across flange nr=1
Percentage to be provided per=80 %

COMPOSITE SECTION SUMMARY	**305 x 165 x 40 UB Grade S 355 with 28 No. 19 dia. stud connectors @ 214 centres. Section is satisfactory for plastic moment, shear, deflection requirements.**
	Steel beam mom. capacity 221.17 kNm
	Composite stage moment 320 kNm
	Ultimate mom. capacity 355.94 kNm
	Vertical shear force 200 kN
	Ult. shear capacity 387.75 kN
	Composite stage deflection 6.5962 mm

Location: Example 2 - RHS example

Calculations in accordance with BS5950 Part3 Section3.1 the 'Code of practice for design of simple and continuous composite beams' July 1990.

```
<———————— be ————————>
|————————————————————————|
|                        |
|————————————————————————|    Ds
|————————————————————————|
  /
 Steel
 deck
                  > t <          Db

  T

       |———B———|
```

Steel section is RHS

Beam is an internal beam.

Factored B.M. in compos.stage	Mcom=320 kNm
Design ultimate shear	Vr=200 kN
Beam span	L1=6 m
Beam centres	L2=3 m
Concrete cube strength	fcu=25 N/mm²
Air dry density for concrete	Dc=17.6 kN/m³
Freshwet density for concrete	D'c=18.8 kN/m³
Modular ratio for steel/concrete	ALPe=15

300 x 200 x 10 RHS - Hot finished.

Properties (cm): A=94.9 rx=11.2 Zx=788 Sx=956 Ix=11800
J=12900 C=1020 Zy=628 Sy=721 Iy=6280 ry=8.13

Young's Modulus E=205 kN/mm²

```
|————————————————————————————————————————|
|                                        |
| - - - - - - - - - - - - - - - - - - - - - - - - - - - mesh
/                                        /          Ds
|                                        |      Dp
|————————————————————————————————————————|
```

Slab depth Ds=150 mm

Composite beam deflection (SLS) DELf=6 mm
Number of studs across flange nr=1
Percentage to be provided per=80 %

COMPOSITE SECTION SUMMARY

Hot finished RHS to BS EN 10210
300 x 200 x 10 Grade S 355
with 62 No. 19 dia. stud connectors
@ 96 centres.
Section is satisfactory for
plastic moment, shear, deflection
requirements.

Steel beam mom. capacity	**335.69 kNm**
Composite stage moment	**320 kNm**
Ultimate mom. capacity	**684.7 kNm**
Vertical shear force	**200 kN**
Ult. shear capacity	**1212.8 kN**
Composite stage deflection	**6.9059 mm**

Location: Example 3 - Channel example

Calculations in accordance with BS5950 Part3 Section3.1 the 'Code of practice for design of simple and continuous composite beams' July 1990.

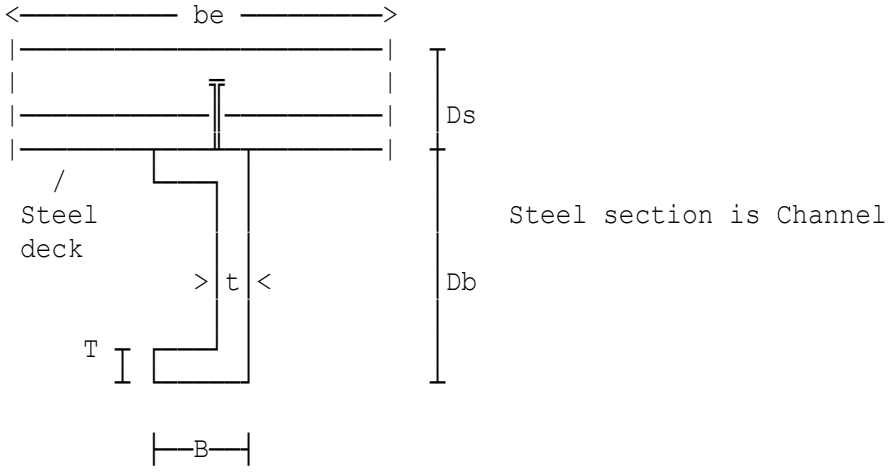

Beam is an internal beam.

Factored B.M. in compos.stage	Mcom=320 kNm
Design ultimate shear	Vr=200 kN
Beam span	L1=6 m
Beam centres	L2=3 m
Concrete cube strength	fcu=25 N/mm²
Air dry density for concrete	Dc=17.6 kN/m³
Freshwet density for concrete	D'c=18.8 kN/m³
Modular ratio for steel/concrete	ALPe=15
305 x 89 Tapered Channel.	
Young's Modulus	E=205 kN/mm²

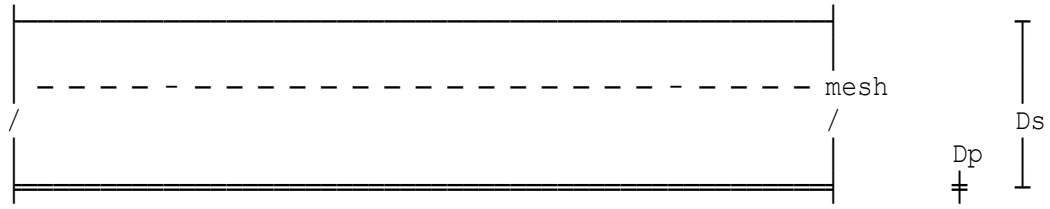

Slab depth Ds=150 mm

Composite beam deflection (SLS) DELf=6 mm
Number of studs across flange nr=1
Percentage to be provided per=80 %

COMPOSITE SECTION SUMMARY	**305 x 89 TFC Grade S 355 with 46 No. 19 dia. stud connectors @ 130 centres. Section is satisfactory for plastic moment, shear, deflection requirements.**
	Steel beam mom. capacity 197.85 kNm
	Composite stage moment 320 kNm
	Ultimate mom. capacity 450.21 kNm
	Vertical shear force 200 kN
	Ult. shear capacity 662.21 kN
	Composite stage deflection 7.0506 mm

Location: Ex1 - Universal beam example with metal decking

Calculations are in accordance with BS EN 1994-1-1:2004 the Code of practice for the 'Design of composite steel & concrete structures'.

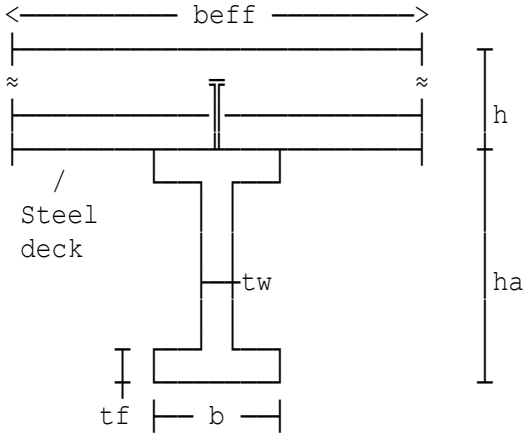

Steel section is UKB

The beam under consideration is an internal beam.

Design B.M. (compos.stage)	MyEd=320 kNm
Design shear force (comp.stage)	VcEd=200 kN
Concrete density (const.stage)	D'c=19 kN/m³
Concrete density (final stage)	Dc=18 kN/m³

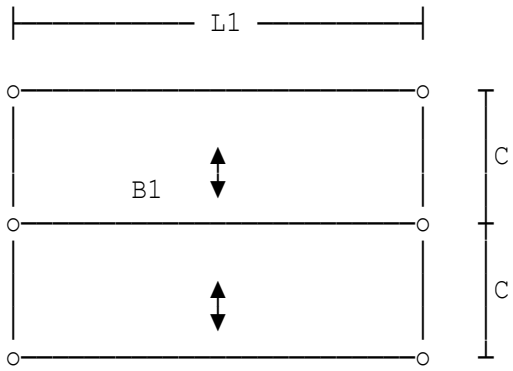

B1 = supporting beam

L1 = beam span

C = beam centres

Floor Plan

Beam span	L1=6 m
Beam cross-centres	C=3 m

Deck spans onto the supporting internal beam under consideration.
305 x 165 x 40 UKB
Dimensions (mm): h=303.4 b=165 tw=6 tf=10.2 r=8.9
Properties (cm): Iy=8500 Iz=764 Wply=623 Wplz=142 It=14.7

Material partial factors

Partial safety factor (reinfnt.)	gams=1.15
Partial safety factor (concrete)	gamc=1.5
Partial safety factor (steel)	gamM0=1.0
Partial safety factor (steel)	gamM1=1.0
Partial safety factor (studs)	gamv=1.25

Concrete slab details

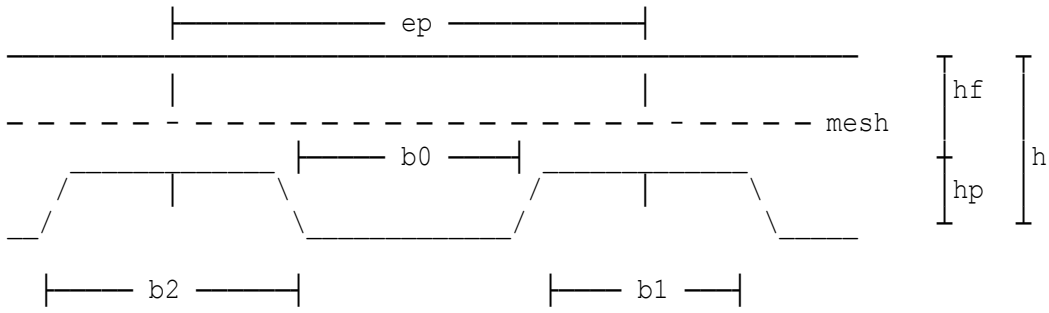

Depth of concrete above profile	hf=80 mm
Depth of profiling	hp=50 mm
Centres of profiles	ep=300 mm
Width at inside of profile	b1=125 mm
Width at outside of profile	b2=175 mm
Thickness of sheeting	tp=1.2 mm
Mean width of concrete ribs	b0=150 mm

Composite section – elastic section properties

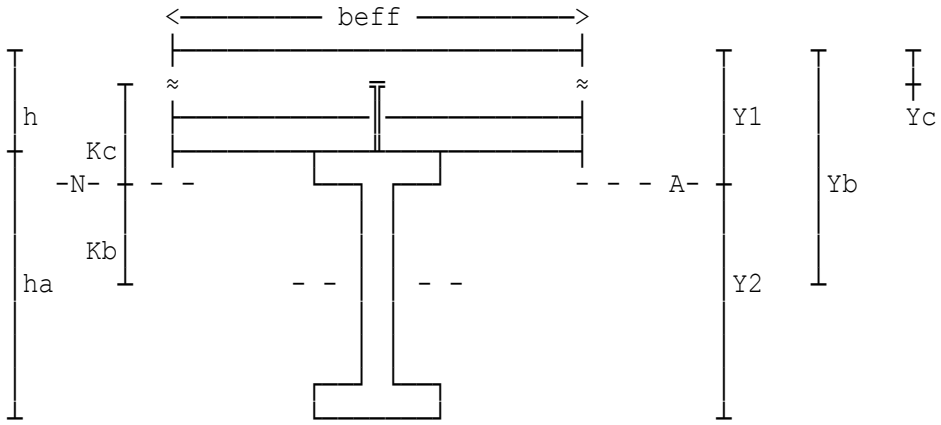

Inertia of combined section (steel units)

	Ina=27727 cm⁴
Composite beam deflection (SLS)	dv=6 mm
Plastic moment of resistance	Mpl=Mplc+Mplf+Mplb+Mplw+Mpll =364.44 kNm
Shear plastic resistance	VplEd=VplRd=411.3 kN
Char yield strength of reinft.	fyk=500 N/mm²

COMPOSITE SECTION SUMMARY

305 x 165 x 40 UKB Grade S 355
with 40 No. 19 dia. stud connectors
@ 300 centres.
Studs to be grouped in 2 's.
Section is satisfactory for plastic
moment, shear & deflection requirements.

Steel beam mom.capacity	221.17 kNm
Composite stage moment	320 kNm
Plastic moment resistance	364.44 kNm
Vertical shear resistance	200 kN
Design shear capacity	411.3 kN
Long.shear stress	2.1791 N/mm²
Long.shear resistance	2.5116 N/mm²
Min transverse reinfnt.	199.91 mm²/mm
Variable load deflection	6 mm
Lightweight concrete (LWC)	assumed

Location: Ex2 - RHS example with solid slab

Calculations are in accordance with BS EN 1994-1-1:2004 the Code of practice for the 'Design of composite steel & concrete structures'.

```
<———————— beff ————————>
|————————————————————————|
|                        |
|————————————————————————|    h
|————————————————————————|
   /
 Steel
 deck
                  tw        ha    Steel section is RHS

                                  tw = tf = t

    tf ├——— b ———┤
```

The beam under consideration is an internal beam.

Design B.M. (compos.stage)	MyEd=320 kNm
Design shear force (comp.stage)	VcEd=200 kN
Concrete density (const.stage)	D'c=19 kN/m³
Concrete density (final stage)	Dc=18 kN/m³
Beam span	L1=6 m

300 x 200 x 10 RHS - Hot finished.
Properties (cm): A=94.9 iz=8.13 Wely=788 Wply=956 Iy=11800
It=12900 Wt=1020 Welz=628 Wplz=721 Iz=6280 iy=11.2

Material partial factors

Partial safety factor (reinfnt.)	gams=1.15
Partial safety factor (concrete)	gamc=1.5
Partial safety factor (steel)	gamM0=1.0
Partial safety factor (steel)	gamM1=1.0
Partial safety factor (studs)	gamv=1.25

Concrete slab details

Composite section – elastic section properties

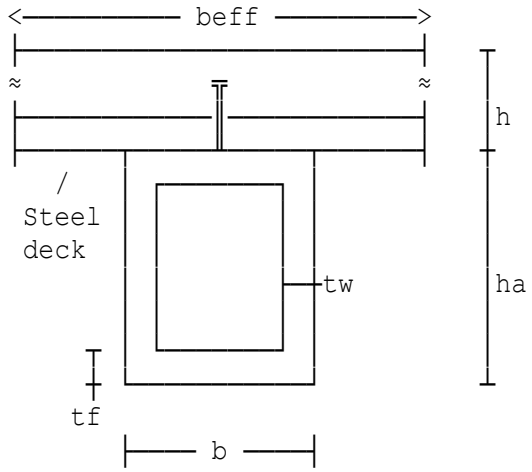

Steel section is RHS

tw = tf = t

hf = h

Inertia of combined section (steel units)

	Ina=45061 cm⁴
Composite beam deflection (SLS)	dv=6 mm
Plastic moment of resistance	Mpl=Mplc+Mpltf+Mplwa+Mplwb+Mpll =521.49 kNm
Shear plastic resistance	VplEd=VplRd=1167 kN
Governing shear length	hf=114.25 mm
Char yield strength of reinft.	fyk=500 N/mm²

	Hot finished RHS to BS EN 10210
COMPOSITE	**300 x 200 x 10 Grade S 355**
SECTION	**with 40 No. 19 dia. stud connectors**
SUMMARY	**@ 150 centres.**
	Section is satisfactory for plastic moment, shear & deflection requirements.
	Steel beam mom.capacity 339.38 kNm
	Composite stage moment 320 kNm
	Plastic moment resistance 521.49 kNm
	Vertical shear resistance 200 kN
	Design shear capacity 1167 kN
	Long.shear stress 2.1192 N/mm²
	Long.shear resistance 2.5116 N/mm²
	Min transverse reinfnt. 277.64 mm²/mm
	Variable load deflection 6 mm
	Lightweight concrete (LWC) assumed

Location: Ex3 - Channel example with solid slab

Calculations are in accordance with BS EN 1994-1-1:2004 the Code of practice for the 'Design of composite steel & concrete structures'.

```
<———————— beff ————————>
|————————————————————————|  ┬
|                        |  │
|————————————————————————|  │h
|————————————————————————|  ┴
   /
 Steel                  |  |                 Steel section is UKPFC
 deck                   |  |
                        |  |tw               ha
                        |  |
                        |  |
                        |  |
```

Composite section – elastic section properties

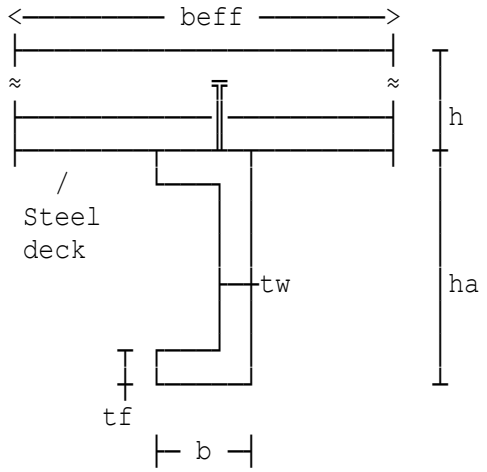

Steel section is UKPFC

Inertia of combined section (steel units)

	Ina=32830 cm⁴
Composite beam deflection (SLS)	dv=6 mm
Plastic moment of resistance	Mpl=Mplc+Mplf+Mplb+Mplw+Mpll =351.81 kNm
Shear plastic resistance	VplEd=VplRd=576.84 kN
Governing shear length	hf=114.25 mm
Char yield strength of reinft.	fyk=500 N/mm²

COMPOSITE SECTION SUMMARY	**300 x 100 UKPFC Grade S 355 with 24 No. 19 dia. stud connectors @ 250 centres. Section is satisfactory for plastic moment, shear & deflection requirements.**
	Steel beam mom.capacity 221.15 kNm
	Composite stage moment 320 kNm
	Plastic moment resistance 351.81 kNm
	Vertical shear resistance 200 kN
	Design shear capacity 576.84 kN
	Long.shear stress 1.2715 N/mm²
	Long.shear resistance 2.5116 N/mm²
	Min transverse reinfnt. 228.5 mm²/mm
	Variable load deflection 6 mm
	Lightweight concrete (LWC) assumed

Location: Ex4 - UB with decking & one secondary beam @ mid-span

Calculations are in accordance with BS EN 1994-1-1:2004 the Code of practice for the 'Design of composite steel & concrete structures'.

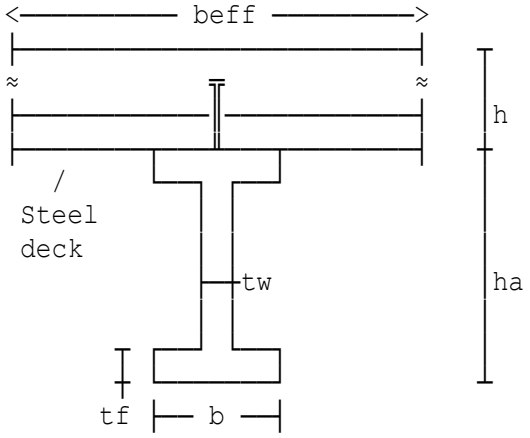

Steel section is UKB

The beam under consideration is an internal beam.

Design B.M. (compos.stage)	MyEd=320 kNm
Design shear force (comp.stage)	VcEd=200 kN
Concrete density (const.stage)	D'c=19 kN/m³
Concrete density (final stage)	Dc=18 kN/m³

Deck is parallel to the supporting beam.

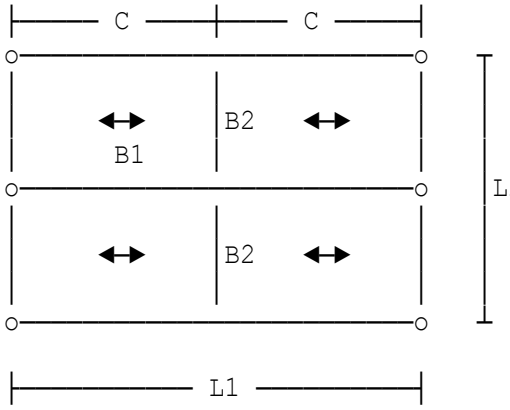

deck ribs are parallel to B1

B1 = beam being considered

B2 = secondary beam

C = L1/2

Floor Plan

Beam span	L1=6 m
Sum of secondary beam spans	L2=6 m

305 x 165 x 40 UKB
Dimensions (mm): h=303.4 b=165 tw=6 tf=10.2 r=8.9
Properties (cm): Iy=8500 Iz=764 Wply=623 Wplz=142 It=14.7

Material partial factors

Partial safety factor (reinfnt.)	gams=1.15
Partial safety factor (concrete)	gamc=1.5
Partial safety factor (steel)	gamM0=1.0
Partial safety factor (steel)	gamM1=1.0
Partial safety factor (studs)	gamv=1.25

Concrete slab details

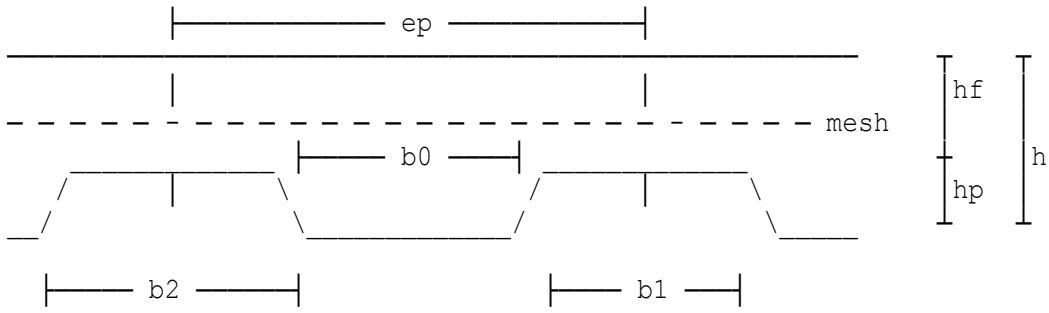

Depth of concrete above profile	hf=80 mm
Depth of profiling	hp=50 mm
Centres of profiles	ep=300 mm
Width at inside of profile	b1=125 mm
Width at outside of profile	b2=175 mm
Thickness of sheeting	tp=1.2 mm
Mean width of concrete ribs	b0=150 mm
Shear force at maximum BM	V=200 kN

Composite section – elastic section properties

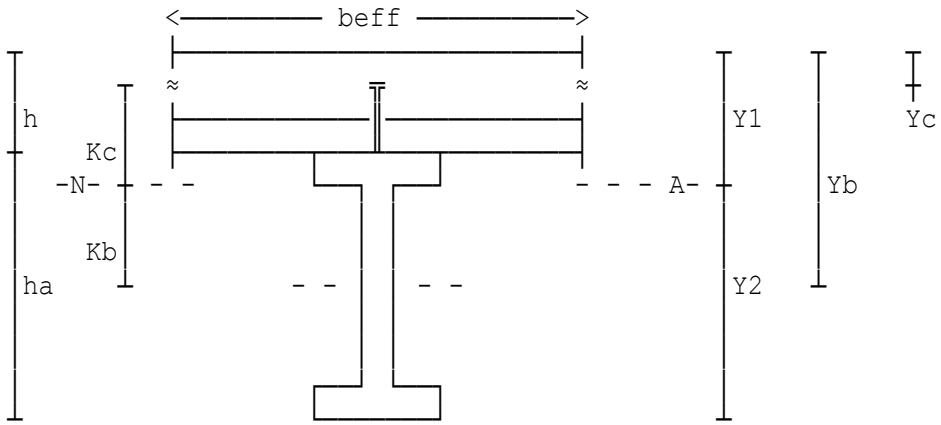

Inertia of combined section (steel units)

	Ina=27727 cm⁴
Composite beam deflection (SLS)	dv=6 mm
Plastic moment of resistance	Mpl=Mplc+Mplf+Mplb+Mplw+Mpll =340.37 kNm
Shear plastic resistance	VplEd=VplRd=411.3 kN
Char yield strength of reinft.	fyk=500 N/mm²
Area of reinfnt.per shear plane	Ae=174 mm²/m

COMPOSITE SECTION SUMMARY	**305 x 165 x 40 UKB Grade S 355 with 22 No. 19 dia. stud connectors @ 270 centres. Section is satisfactory for plastic moment, shear & deflection requirements.**
Steel beam mom.capacity	**221.17 kNm**
Composite stage moment	**320 kNm**
Plastic moment resistance	**340.37 kNm**
Vertical shear resistance	**200 kN**
Design shear capacity	**411.3 kN**
Long.shear force	**134.51 kN/m**
Long.shear resistance	**134.85 kN/m**
Min transverse reinfnt.	**174 mm^2/mm**
Variable load deflection	**6 mm**
Lightweight concrete (LWC)	**assumed**

Location: Ex5 - UB with decking & secondary beams @ 1/3 points

Calculations are in accordance with BS EN 1994-1-1:2004 the Code of practice for the 'Design of composite steel & concrete structures'.

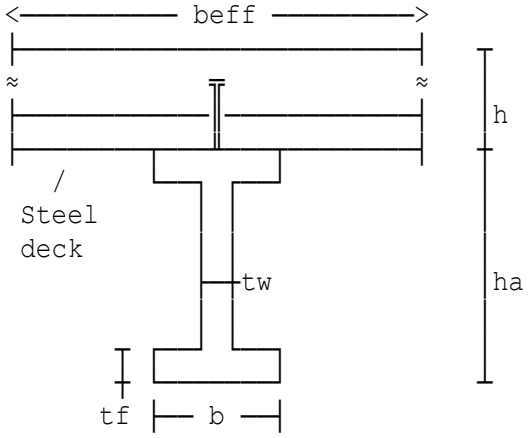

Steel section is UKB

The beam under consideration is an internal beam.

Design B.M. (compos.stage)	MyEd=320 kNm
Design shear force (comp.stage)	VcEd=200 kN
Concrete density (const.stage)	D'c=19 kN/m³
Concrete density (final stage)	Dc=18 kN/m³

Deck is parallel to the supporting beam.

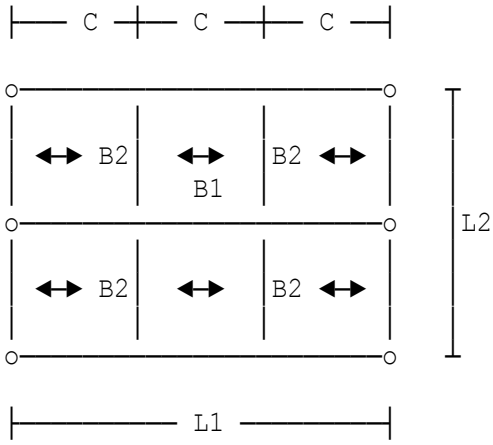

deck ribs are parallel to B1

B1 = beam being considered

B2 = secondary beam

C = L1/3

Floor plan

Beam span	L1=6 m
Sum of secondary beam spans	L2=6 m

305 x 165 x 40 UKB
Dimensions (mm): h=303.4 b=165 tw=6 tf=10.2 r=8.9
Properties (cm): Iy=8500 Iz=764 Wply=623 Wplz=142 It=14.7

Material partial factors

Partial safety factor (reinfnt.) gams=1.15
Partial safety factor (concrete) gamc=1.5
Partial safety factor (steel) gamM0=1.0
Partial safety factor (steel) gamM1=1.0
Partial safety factor (studs) gamv=1.25

Concrete slab details

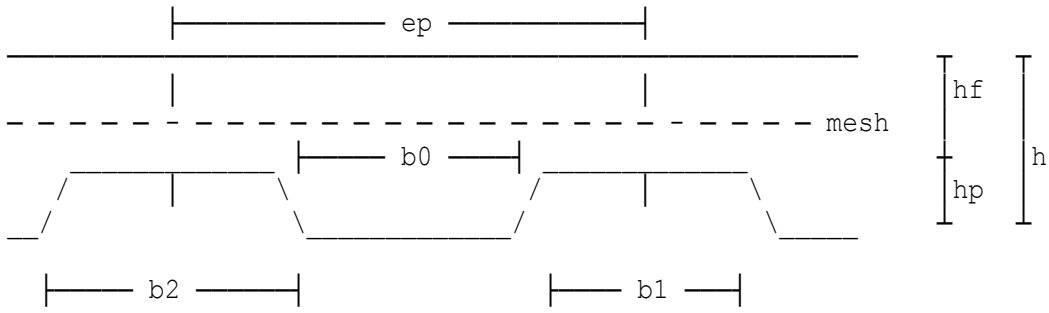

Depth of concrete above profile hf=80 mm
Depth of profiling hp=50 mm
Centres of profiles ep=300 mm
Width at inside of profile b1=125 mm
Width at outside of profile b2=175 mm
Thickness of sheeting tp=1.2 mm
Mean width of concrete ribs b0=150 mm
Shear force at maximum BM V=200 kN

Composite section – elastic section properties

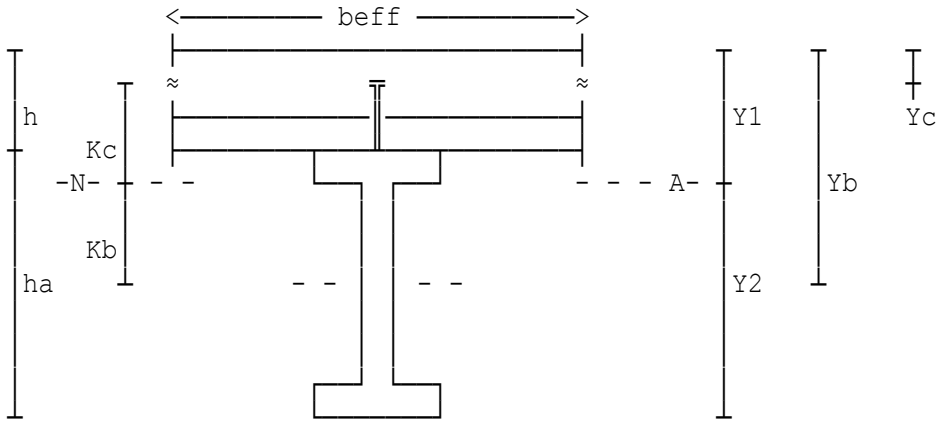

Inertia of combined section (steel units)
Ina=27727 cm⁴
Composite beam deflection (SLS) dv=6 mm
Plastic moment of resistance Mpl=Mplc+Mplf+Mplb+Mplw+Mpll
=340.37 kNm
Shear plastic resistance VplEd=VplRd=411.3 kN

Char yield strength of reinft. fyk=500 N/mm²
Area of reinfnt.per shear plane Ae=328 mm²/m

COMPOSITE SECTION SUMMARY

305 x 165 x 40 UKB Grade S 355
with 11 No. 19 dia. stud connectors
@ 180 centres between each support
and third point, plus nominal studs
between third points.
Section is satisfactory for plastic
moment, shear & deflection requirements.

Steel beam mom.capacity	**221.17 kNm**
Composite stage moment	**320 kNm**
Plastic moment resistance	**340.37 kNm**
Vertical shear resistance	**200 kN**
Design shear capacity	**411.3 kN**
Long.shear force	**201.77 kN/m**
Long.shear resistance	**201.81 kN/m**
Min transverse reinfnt.	**328 mm²/mm**
Variable load deflection	**6 mm**
Lightweight concrete (LWC)	**assumed**

Location: Ex6 - UB with decking & one sec.beam not @ mid-span

Calculations are in accordance with BS EN 1994-1-1:2004 the Code of practice for the 'Design of composite steel & concrete structures'.

```
<---------- beff ---------->
|------------------------|
≈                        ≈
|----------|----------|   h
|----------|----------|
|------------------------|
  /
 Steel
 deck
            |  |
            |tw|            ha
            |  |
            |  |
            |  |
```

Material partial factors

Partial safety factor (reinfnt.) gams=1.15
Partial safety factor (concrete) gamc=1.5
Partial safety factor (steel) gamM0=1.0
Partial safety factor (steel) gamM1=1.0
Partial safety factor (studs) gamv=1.25

Concrete slab details

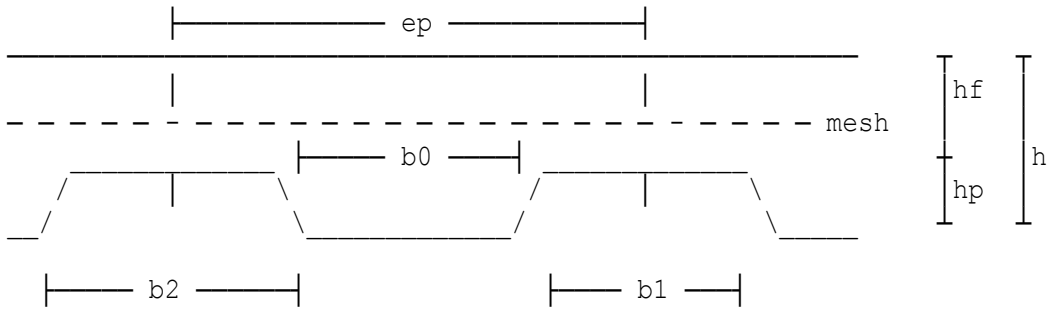

Depth of concrete above profile hf=80 mm
Depth of profiling hp=50 mm
Centres of profiles ep=300 mm
Width at inside of profile b1=125 mm
Width at outside of profile b2=175 mm
Thickness of sheeting tp=1.2 mm
Mean width of concrete ribs b0=150 mm
Shear force at maximum BM V=200 kN

Composite section – elastic section properties

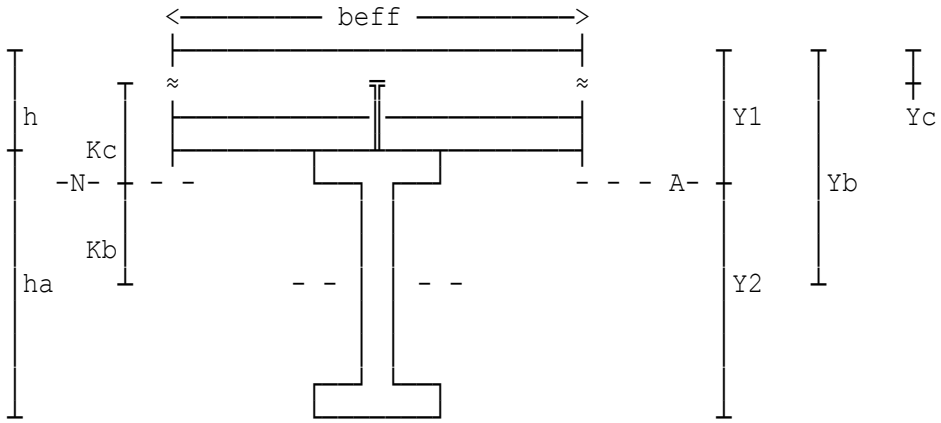

Inertia of combined section (steel units)
Ina=27727 cm⁴
Composite beam deflection (SLS) dv=6 mm
Plastic moment of resistance Mpl=Mplc+Mplf+Mplb+Mplw+Mpll
=340.37 kNm
Shear plastic resistance VplEd=VplRd=411.3 kN

Char yield strength of reinft. fyk=500 N/mm²
Area of reinfnt.per shear plane Ae=328 mm²/m

COMPOSITE SECTION SUMMARY

305 x 165 x 40 UKB Grade S 355
with 22 No. 19 dia. stud connectors
(11 No. @ 180 centres over the shortest distance and 11 No. @ 360 centres over the longest distance).
Section is satisfactory for plastic moment, shear & deflection requirements.

Steel beam mom.capacity	**221.17 kNm**
Composite stage moment	**320 kNm**
Plastic moment resistance	**340.37 kNm**
Vertical shear resistance	**200 kN**
Design shear capacity	**411.3 kN**
Long.shear force	**201.77 kN/m**
Long.shear resistance	**201.81 kN/m**
Min transverse reinfnt.	**328 mm²/mm**
Variable load deflection	**6 mm**
Lightweight concrete (LWC)	**assumed**

Location: Ex7 - UB with decking & two sec.beams not @ 1/3 points

Calculations are in accordance with BS EN 1994-1-1:2004 the Code of practice for the 'Design of composite steel & concrete structures'.

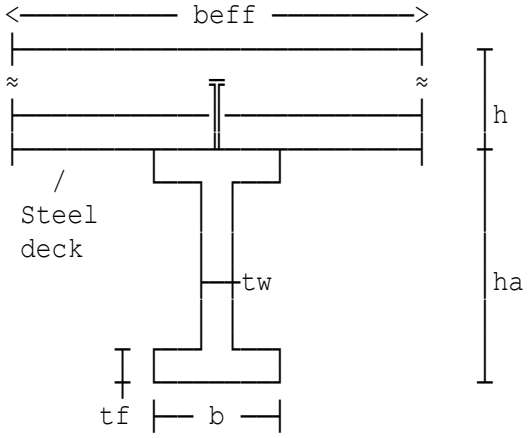

Steel section is UKB

The beam under consideration is an internal beam.

Design B.M. (compos.stage)	MyEd=320 kNm
Design shear force (comp.stage)	VcEd=200 kN
Concrete density (const.stage)	D'c=19 kN/m³
Concrete density (final stage)	Dc=18 kN/m³

Deck is parallel to the supporting beam.

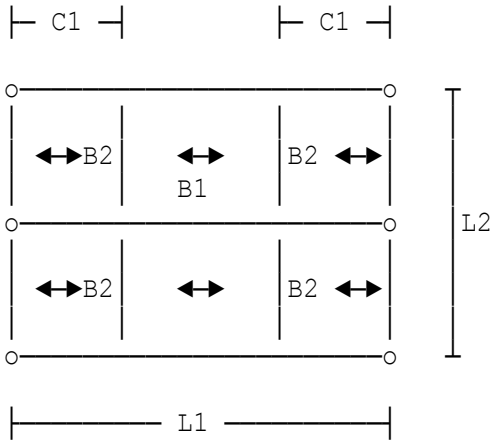

deck ribs are parallel to B1

B1 = beam being considered

B2 = secondary beam

C1 = distance from point of max moment to support

Floor plan

Beam span	L1=6 m
Sum of secondary beam spans	L2=6 m
Distance from supp.to point load	C1=2 m

305 x 165 x 40 UKB
Dimensions (mm): h=303.4 b=165 tw=6 tf=10.2 r=8.9
Properties (cm): Iy=8500 Iz=764 Wply=623 Wplz=142 It=14.7

Material partial factors

Partial safety factor (reinfnt.) gams=1.15
Partial safety factor (concrete) gamc=1.5
Partial safety factor (steel) gamM0=1.0
Partial safety factor (steel) gamM1=1.0
Partial safety factor (studs) gamv=1.25

Concrete slab details

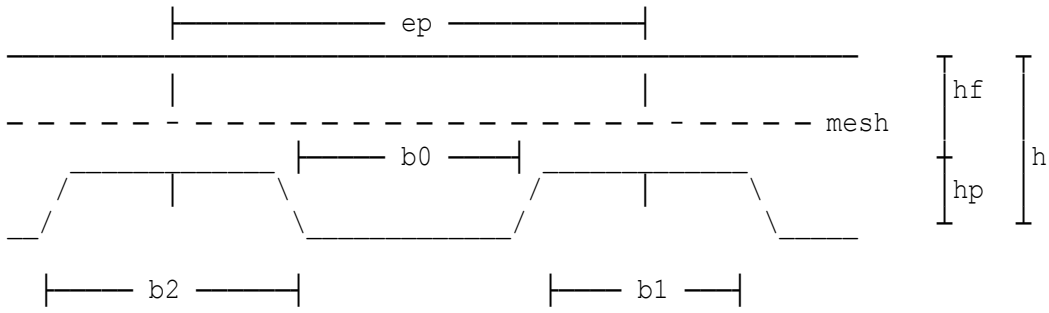

Depth of concrete above profile hf=80 mm
Depth of profiling hp=50 mm
Centres of profiles ep=300 mm
Width at inside of profile b1=125 mm
Width at outside of profile b2=175 mm
Thickness of sheeting tp=1.2 mm
Mean width of concrete ribs b0=150 mm
Shear force at maximum BM V=200 kN

Composite section – elastic section properties

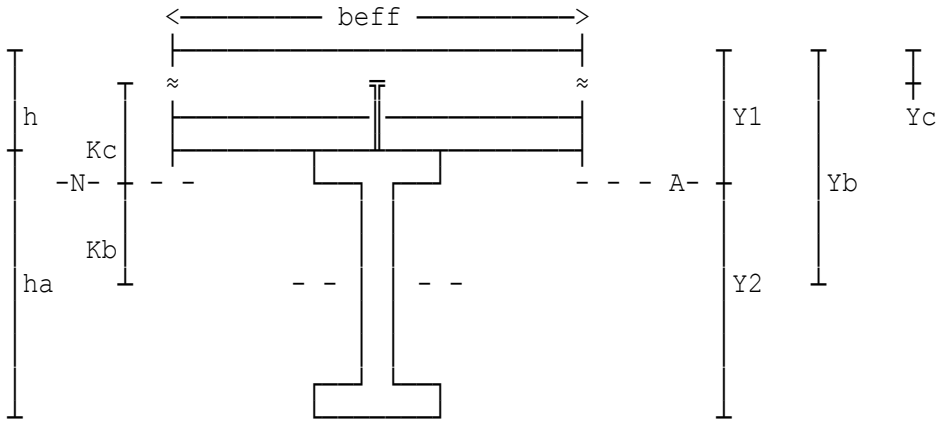

Inertia of combined section (steel units)
Ina=27727 cm⁴
Composite beam deflection (SLS) dv=6 mm
Plastic moment of resistance Mpl=Mplc+Mplf+Mplb+Mplw+Mpll
=340.37 kNm
Shear plastic resistance VplEd=VplRd=411.3 kN

Char yield strength of reinft. fyk=500 N/mm²
Area of reinfnt.per shear plane Ae=328 mm²/m

COMPOSITE SECTION SUMMARY

305 x 165 x 40 UKB Grade S 355
with 11 No. 19 dia. stud connectors
@ 180 centres between each support
and third point, plus nominal studs
between third points.
Section is satisfactory for plastic
moment, shear & deflection requirements.

Steel beam mom.capacity	**221.17 kNm**
Composite stage moment	**320 kNm**
Plastic moment resistance	**340.37 kNm**
Vertical shear resistance	**200 kN**
Design shear capacity	**411.3 kN**
Long.shear force	**201.77 kN/m**
Long.shear resistance	**201.81 kN/m**
Min transverse reinfnt.	**328 mm²/mm**
Variable load deflection	**6 mm**
Lightweight concrete (LWC)	**assumed**

Location: Ex8 - Edge beam with two sec.beams not @ 1/3 points

Calculations are in accordance with BS EN 1994-1-1:2004 the Code of practice for the 'Design of composite steel & concrete structures'.

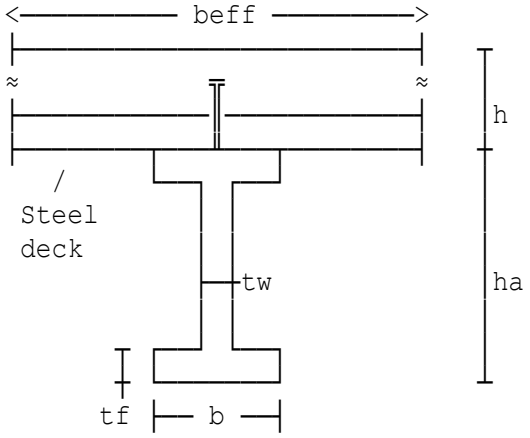

Steel section is UKB

The beam under consideration is an edge beam.

Design B.M. (compos.stage)	MyEd=320 kNm
Design shear force (comp.stage)	VcEd=200 kN
Concrete density (const.stage)	D'c=19 kN/m³
Concrete density (final stage)	Dc=18 kN/m³

Deck is parallel to the supporting beam.

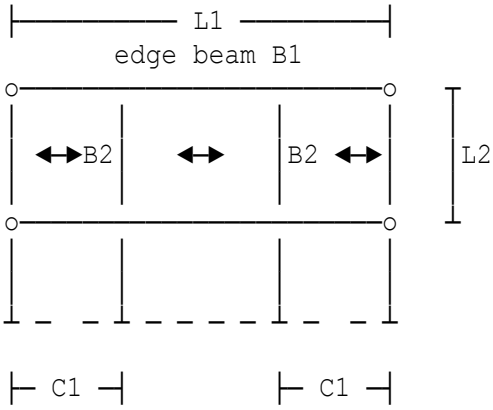

deck ribs are parallel to B1

B1 = beam being considered

B2 = secondary beam

C1 = distance from point of max moment to support

Floor plan

Beam span	L1=6 m
Secondary beam span	L2=6 m
Distance from supp.to point load	C1=2 m

305 x 165 x 54 UKB
Dimensions (mm): h=310.4 b=166.9 tw=7.9 tf=13.7 r=8.9
Properties (cm): Iy=11700 Iz=1060 Wply=846 Wplz=196 It=34.8

Material partial factors

Partial safety factor (reinfnt.) gams=1.15
Partial safety factor (concrete) gamc=1.5
Partial safety factor (steel) gamM0=1.0
Partial safety factor (steel) gamM1=1.0
Partial safety factor (studs) gamv=1.25

Concrete slab details

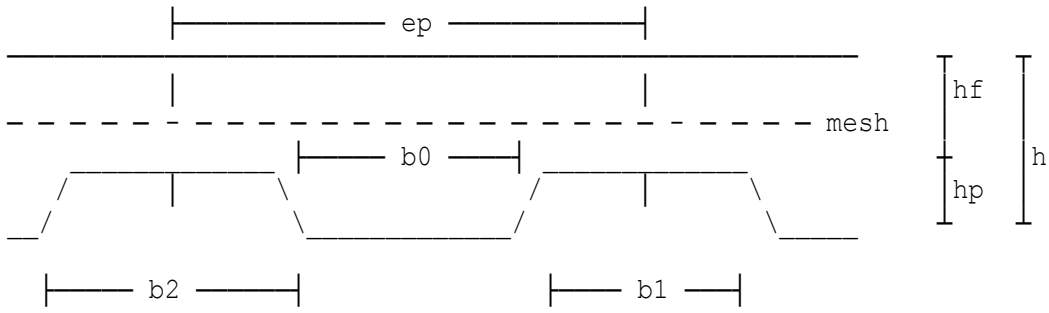

Depth of concrete above profile hf=80 mm
Depth of profiling hp=50 mm
Centres of profiles ep=300 mm
Width at inside of profile b1=125 mm
Width at outside of profile b2=175 mm
Thickness of sheeting tp=1.2 mm
Mean width of concrete ribs b0=150 mm
Shear force at maximum BM V=200 kN

Composite section – elastic section properties

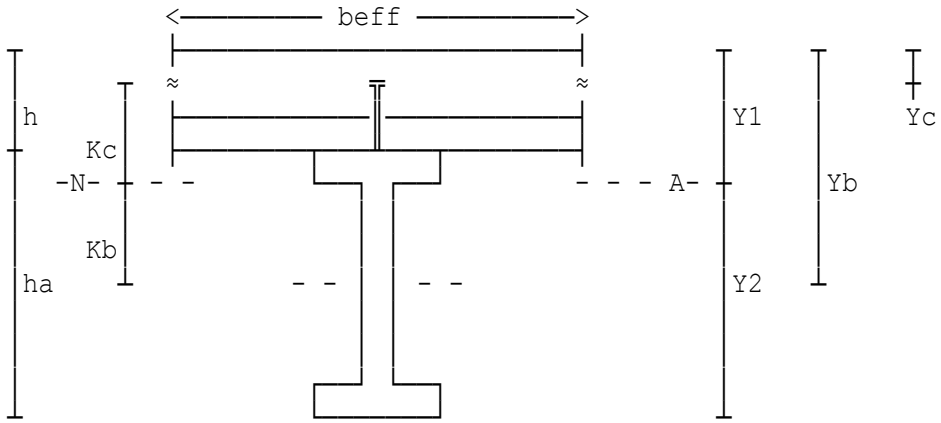

Inertia of combined section (steel units)
Ina=27834 cm⁴
Composite beam deflection (SLS) dv=6 mm
Plastic moment of resistance Mpl=Mplc+Mpltf+Mplwa+Mplwb+Mpll
=392.54 kNm
Shear plastic resistance VplEd=VplRd=544.99 kN

Char yield strength of reinft. fyk=500 N/mm²
Area of reinfnt.per shear plane Ae=371 mm²/m

COMPOSITE SECTION SUMMARY

305 x 165 x 54 UKB Grade S 355
with 6 No. 19 dia. stud connectors
@ 330 centres between each support
and third point, plus nominal studs
between third points.
Section is satisfactory for plastic
moment, shear & deflection requirements.

Steel beam mom.capacity	**300.33 kNm**
Composite stage moment	**320 kNm**
Plastic moment resistance	**392.54 kNm**
Vertical shear resistance	**200 kN**
Design shear capacity	**544.99 kN**
Long.shear force	**220.11 kN/m**
Long.shear resistance	**220.5 kN/m**
Min transverse reinfnt.	**371 mm²/mm**
Variable load deflection	**6 mm**
Lightweight concrete (LWC)	**assumed**

Location: Ex9 - Universal beam with Solid slab

Calculations are in accordance with BS EN 1994-1-1:2004 the Code of practice for the 'Design of composite steel & concrete structures'.

```
<———————— beff ————————>
├──────────────────────────┤
≈                          ≈
├──────────────┬──────────────┤   h
├──────────────┴──────────────┤
   /
 Steel
 deck
              ├─┤tw                ha
       ┌──┬──┬──┬
```

Location: Ex10 - RHS example with solid slab using P405 rules

Calculations are in accordance with BS EN 1994-1-1:2004 the Code of practice for the 'Design of composite steel & concrete structures'.

```
<———————— beff ————————>
|————————————————————————|
|                        |
|————————————————————————|    h
|————————————————————————|
   /
 Steel
 deck
                  tw        ha    Steel section is RHS
                                  tw = tf = t
    tf ├——— b ———┤
```

The beam under consideration is an internal beam.

Design B.M. (compos.stage)	MyEd=320 kNm
Design shear force (comp.stage)	VcEd=200 kN
Concrete density (const.stage)	D'c=19 kN/m³
Concrete density (final stage)	Dc=18 kN/m³
Beam span	L1=6 m

300 x 200 x 10 RHS - Hot finished.
Properties (cm): A=94.9 iz=8.13 Wely=788 Wply=956 Iy=11800
It=12900 Wt=1020 Welz=628 Wplz=721 Iz=6280 iy=11.2

Material partial factors

Partial safety factor (reinfnt.)	gams=1.15
Partial safety factor (concrete)	gamc=1.5
Partial safety factor (steel)	gamM0=1.0
Partial safety factor (steel)	gamM1=1.0
Partial safety factor (studs)	gamv=1.25

Concrete slab details

Composite section – elastic section properties

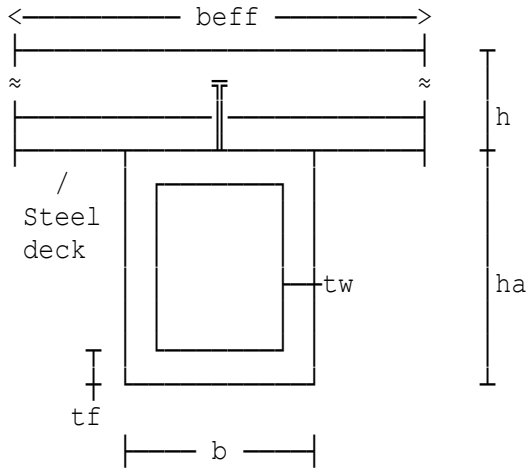

Steel section is RHS

tw = tf = t

hf = h

Inertia of combined section (steel units)

	Ina=45061 cm⁴
Composite beam deflection (SLS)	dv=6 mm

Section chosen is considered to be suitable.

Plastic moment of resistance	Mpl=Mplc+Mpltf+Mplwa+Mplwb+Mpll =492.92 kNm
Shear plastic resistance	VplEd=VplRd=1167 kN
Governing shear length	hf=114.25 mm
Char yield strength of reinft.	fyk=500 N/mm²
Total steel beam deflection	ds=22 mm
Total composite beam deflection	dc=10 mm
Permanent load deflection	dg=6 mm

COMPOSITE SECTION SUMMARY

Hot finished RHS to BS EN 10210
300 x 200 x 10 Grade S 355
with 26 No. 19 dia. stud connectors
@ 230 centres.
Section is satisfactory for plastic moment, shear & deflection requirements.

Steel beam mom.capacity	**339.38 kNm**
Composite stage moment	**320 kNm**
Plastic moment resistance	**492.92 kNm**
Vertical shear resistance	**200 kN**
Design shear capacity	**1167 kN**
Long.shear stress	**1.3775 N/mm²**
Long.shear resistance	**2.5116 N/mm²**
Min transverse reinfnt.	**228.5 mm²/mm**
Deflection to span ratio at final stage (G + Q)	**1: 296**
Lightweight concrete (LWC)	**assumed**

Location: Ex11 - As Ex6 but using SCI P405 rules

Calculations are in accordance with BS EN 1994-1-1:2004 the Code of practice for the 'Design of composite steel & concrete structures'.

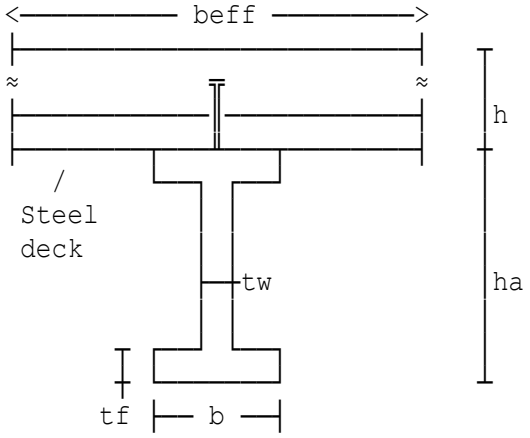

Steel section is UKB

The beam under consideration is an internal beam.
Design B.M. (compos.stage) MyEd=320 kNm
Design shear force (comp.stage) VcEd=200 kN
Concrete density (const.stage) D'c=19 kN/m³
Concrete density (final stage) Dc=18 kN/m³
Deck is parallel to the supporting beam.

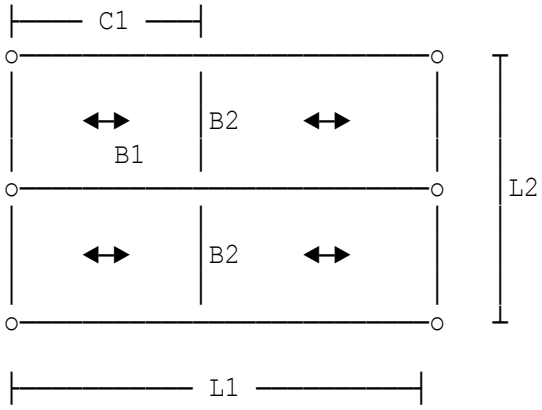

deck ribs are parallel to B1

B1 = beam being considered

B2 = secondary beam

C1 = shorter distance from point of max moment to support

Floor Plan

Beam span L1=6 m
Sum of secondary beam spans L2=6 m
Shorter distance from supp.to PL C1=2 m
305 x 165 x 40 UKB
Dimensions (mm): h=303.4 b=165 tw=6 tf=10.2 r=8.9
Properties (cm): Iy=8500 Iz=764 Wply=623 Wplz=142 It=14.7

Material partial factors

Partial safety factor (reinfnt.) gams=1.15
Partial safety factor (concrete) gamc=1.5
Partial safety factor (steel) gamM0=1.0
Partial safety factor (steel) gamM1=1.0
Partial safety factor (studs) gamv=1.25

Concrete slab details

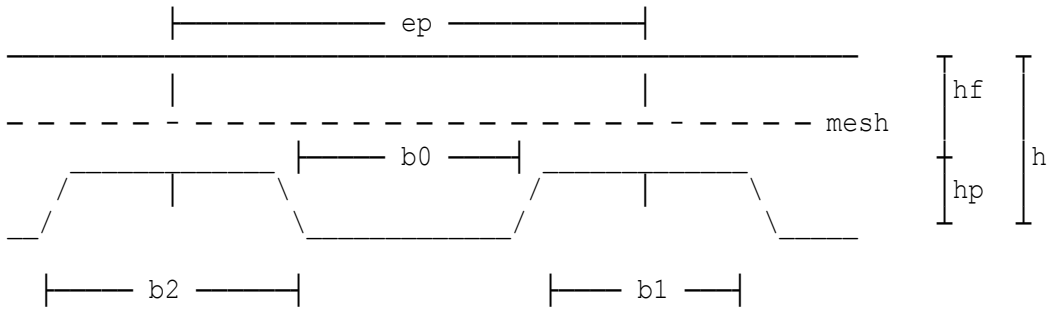

Depth of concrete above profile hf=80 mm
Depth of profiling hp=50 mm
Centres of profiles ep=300 mm
Width at inside of profile b1=125 mm
Width at outside of profile b2=175 mm
Thickness of sheeting tp=1.2 mm
Mean width of concrete ribs b0=150 mm
Shear force at maximum BM V=200 kN

Composite section – elastic section properties

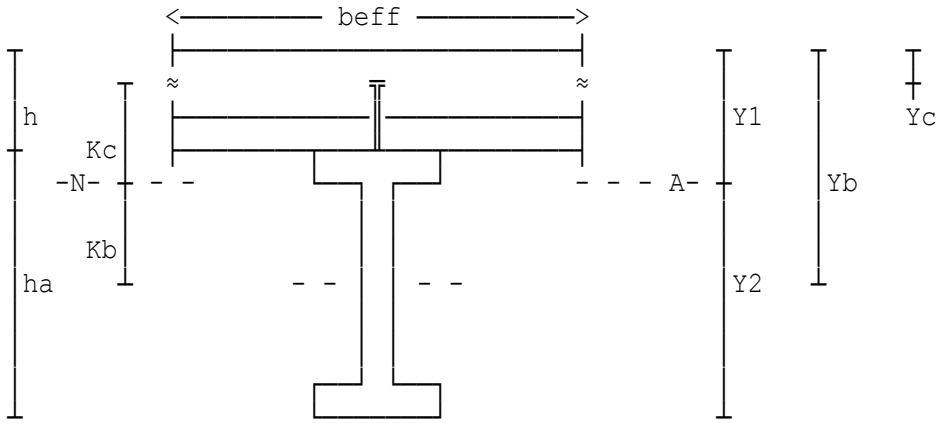

Inertia of combined section (steel units)
Ina=27727 cm⁴
Composite beam deflection (SLS) dv=6 mm
Section chosen is considered to be suitable.
Plastic moment of resistance Mpl=Mplc+Mplf+Mplb+Mplw+Mpll
=333.19 kNm

Shear plastic resistance	VplEd=VplRd=411.3 kN
Char yield strength of reinft.	fyk=500 N/mm²
Area of reinfnt.per shear plane	Ae=282 mm²/m
Total steel beam deflection	ds=22 mm
Total composite beam deflection	dc=10 mm
Permanent load deflection	dg=5 mm

COMPOSITE SECTION SUMMARY

305 x 165 x 40 UKB Grade S 355 with 20 No. 19 dia. stud connectors (10 No. @ 200 centres over the shortest distance and 10 No. @ 400 centres over the longest distance). Section is satisfactory for plastic moment, shear & deflection requirements.

Steel beam mom.capacity	**221.17 kNm**
Composite stage moment	**320 kNm**
Plastic moment resistance	**333.19 kNm**
Vertical shear resistance	**200 kN**
Design shear capacity	**411.3 kN**
Long.shear force	**181.59 kN/m**
Long.shear resistance	**181.81 kN/m**
Min transverse reinfnt.	**282 mm²/mm**
Deflection to span ratio at final stage (G + Q)	**1: 351**
Lightweight concrete (LWC)	**assumed**

Location: Ex12 - As Ex2 but with P405 rules

Calculations are in accordance with BS EN 1994-1-1:2004 the Code of practice for the 'Design of composite steel & concrete structures'.

```
<———————— beff ————————>
|————————————————————————|
|                        |
|————————————————————————|
|————————————————————————|
   /
 Steel
 deck
                    tw
    tf ├——— b ———┤
```

h

ha

Steel section is RHS

tw = tf = t

The beam under consideration is an internal beam.

Design B.M. (compos.stage)	MyEd=320 kNm
Design shear force (comp.stage)	VcEd=200 kN
Concrete density (const.stage)	D'c=19 kN/m³
Concrete density (final stage)	Dc=18 kN/m³
Beam span	L1=6 m

300 x 200 x 10 RHS - Hot finished.

Properties (cm): A=94.9 iz=8.13 Wely=788 Wply=956 Iy=11800
It=12900 Wt=1020 Welz=628 Wplz=721 Iz=6280 iy=11.2

Material partial factors

Partial safety factor (reinfnt.)	gams=1.15
Partial safety factor (concrete)	gamc=1.5
Partial safety factor (steel)	gamM0=1.0
Partial safety factor (steel)	gamM1=1.0
Partial safety factor (studs)	gamv=1.25

Concrete slab details

Composite section – elastic section properties

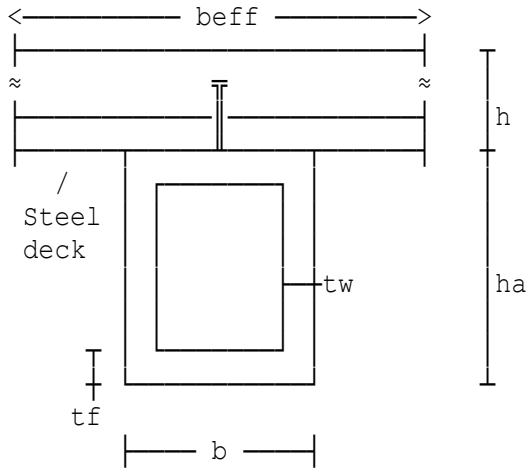

Steel section is RHS

tw = tf = t

hf = h

Inertia of combined section (steel units)

	Ina=45061 cm⁴
Composite beam deflection (SLS)	dv=6 mm

Section chosen is considered to be suitable.

Plastic moment of resistance	Mpl=Mplc+Mpltf+Mplwa+Mplwb+Mpll =522.6 kNm
Shear plastic resistance	VplEd=VplRd=1167 kN
Governing shear length	hf=114.25 mm
Char yield strength of reinft.	fyk=500 N/mm²
Total steel beam deflection	ds=22 mm
Total composite beam deflection	dc=10 mm
Permanent load deflection	dg=5 mm

COMPOSITE SECTION SUMMARY

Hot finished RHS to BS EN 10210
300 x 200 x 10 Grade S 355
with 42 No. 19 dia. stud connectors
@ 140 centres.
Section is satisfactory for plastic moment, shear & deflection requirements.

Steel beam mom.capacity	**339.38 kNm**
Composite stage moment	**320 kNm**
Plastic moment resistance	**522.6 kNm**
Vertical shear resistance	**200 kN**
Design shear capacity	**1167 kN**
Long.shear stress	**2.2252 N/mm²**
Long.shear resistance	**2.5116 N/mm²**
Min transverse reinfnt.	**291.53 mm²/mm**
Deflection to span ratio at final stage (G + Q)	**1: 330**
Lightweight concrete (LWC)	**assumed**

Location: Ex1 -Inner beam

Differential temperature effects in composite bridge decks to BD 37/01

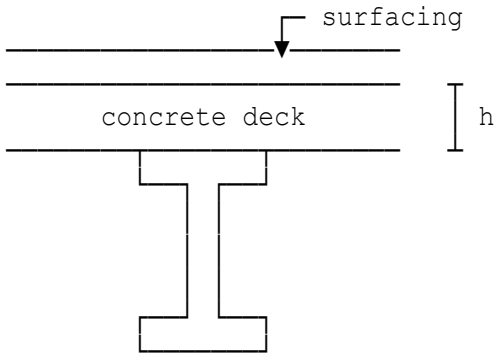

Deck on Truss or Plate Girders

Concrete slab depth	h=220 mm
Depth of surfacing	ds=100 mm
Value of Young's modulus	EMC=31000 N/mm²
Coefficient of expansion	alphac=12E-6 /°C
Value of Young's modulus	EMS=205000 N/mm²
Coefficient of expansion	alphas=12E-6 /°C
Number of cross-sections	ncs=4
Breadth at top	xbt(11)=2744 mm
Breadth at bottom	xbb(11)=2744 mm
Depth	xd(11)=220 mm
Material (1=Steel , 2=Concrete)	mi(11)=2
Breadth at top	xbt(21)=420.5 mm
Breadth at bottom	xbb(21)=420.5 mm
Depth	xd(21)=36.6 mm
Material (1=Steel , 2=Concrete)	mi(21)=1
Breadth at top	xbt(31)=21.5 mm
Breadth at bottom	xbb(31)=21.5 mm
Depth	xd(31)=847.3 mm
Material (1=Steel , 2=Concrete)	mi(31)=1
Breadth at top	xbt(41)=420.5 mm
Breadth at bottom	xbb(41)=420.5 mm
Depth	xd(41)=36.6 mm
Material (1=Steel , 2=Concrete)	mi(41)=1

Positive temperature calculations

Temperature gradient – increments	of depth (Figure 9, BD 37/01)
Depth h1	hp1=0.6*h=132 mm
Depth h2	hp2=0.4*h+400=488 mm
Depth h3	hp3=tsd-400-h=520.5 mm
Temperature values (Figure 9 & Table 23 in BD 37/01):	
Temperature T1	TP1=TABLE 1 for h=220, ds=100 =13.6 °C
Temperature T2	TP2=4 °C

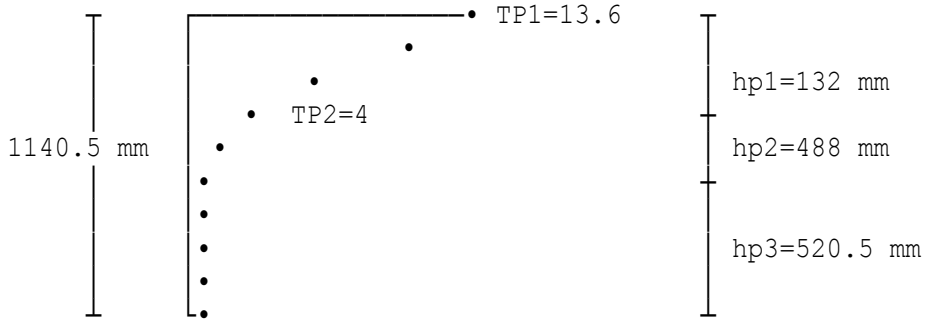

Positive temperature diagram

STRESSES (N/mm²) (tension is positive)

Depth from top	Restrained	Releasing force	Releasing moment	Self equilibrating
0	-5.0592	1.7891	0.92511	-2.345
132	-1.488	1.7891	0.53013	0.83121
220	-1.2197	1.7891	0.26682	0.83622
220	-8.0656	11.831	1.7644	5.5298
256.6	-7.3276	11.831	1.0402	5.5436
620	0	11.831	-6.1504	5.6805
1103.9	0	11.831	-15.725	-3.8945
1140.5	0	11.831	-16.45	-4.6187

Member length L=10 m
Load factor for temperature gamma=1

Plane frame analysis

Axial and bending effects can be analysed in a plane frame model.
Bending effects for hogging releasing moment:

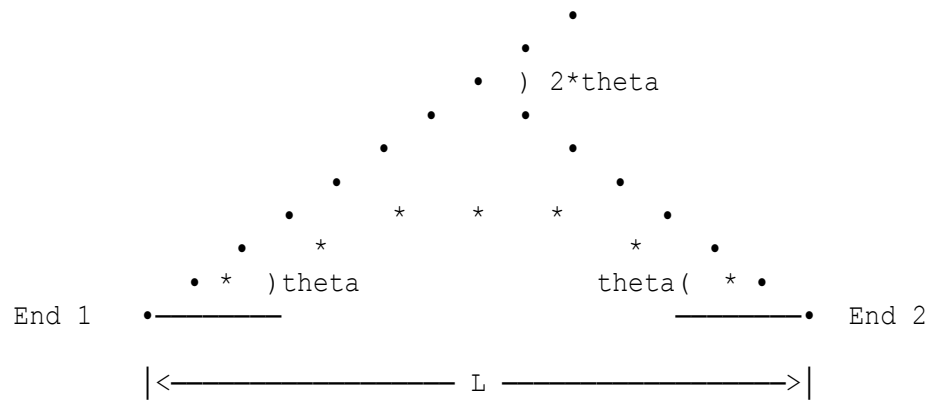

* * deflected shape of released member
•••• tangent to deflected shape at member ends

Calculate the angle (2*theta) in radians
where 2*theta =(RM*L)/(E*I)

```
              •                                 •
                •                             •
            •———•———————————————————————————•———•
                •                             •
              ◀•                              •▶
```

NL-STRESS will apply the opposite of the releasing moment (RM) to the released member and rotate it by 2*theta. The member is then clamped in the frame and let go.

Member distortion (2*theta) mdfmp=(RM*L)/EI=-0.96523E-3 radians
Value of distortion for input to NL-STRESS
                  disfmp=mdfmp*gamma=-0.96523E-3 radians
The distortion should be input into the plane frame analysis using the MEMBER DISTORTIONS option with the following format.

<members> ROTATION Z -0.96523E-3

The equilibrating stresses should be taken into account when stresses at a section due to combinations of loading are calculated.
Longitudinal effects for tensile releasing force:
Released member •—— ——•

```
      |<——dL——>|<————————————————— L —————————————————>|

      •————————*————————————————————————————————————————•
```

Calculate the extension of the member dL=(RF*L)/(A*E) in metres

NL-STRESS will apply the opposite of the releasing force (RF) to the released member and compress it by dL. The member is then clamped in the frame and let go.

Member distortion mdffp=(RF*L)*1000/EQ1=0.57712E-3 m
Value of distortion for input to NL-STRESS
                  disffp=mdffp*gamma=0.57712E-3 m
The value should be input into the plane frame analysis using the MEMBER DISTORTIONS option with the following format.

<members> DISTORTION X 0.57712E-3

The equilibrating stresses should be taken into account when stresses at a section due to combinations of loading are calculated.

Reverse temperature calculations

Temperature gradient — increments of depth (Figure 9, BD 37/01)
Depth h1 hn1=0.6*h=132 mm
Depth h2 hn2=0.4*h=88 mm
Depth h3 hn3=400 mm
Depth h4 hn4=tsd-h-400=520.5 mm
Temperature values (Figure 9 & Table 23 in BD 37/01):
Temperature T1 TR1=TABLE 2 for h=220, ds=100
                =-3.8 °C
Temperature T2 TR2=-8 °C
Temperature T3 TR3=-8 °C

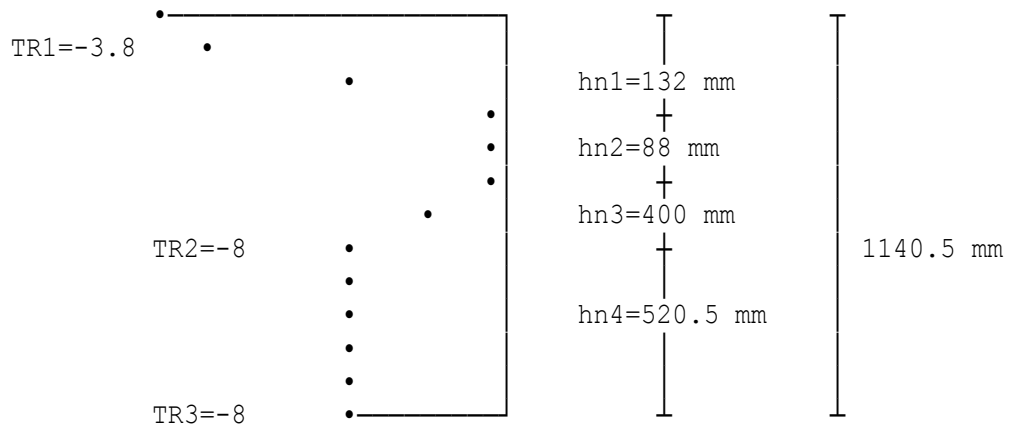

Reverse temperature diagram

STRESSES (N/mm²) (tension is positive)

Depth from top	Restrained	Releasing force	Releasing moment	Self equilibrating
0	1.4136	-0.92855	0.80109	1.2861
132	0	-0.92855	0.45907	-0.46948
220	0	-0.92855	0.23105	-0.6975
220	0	-6.1404	1.5279	-4.6125
256.6	1.8007	-6.1404	0.90079	-3.4389
620	19.68	-6.1404	-5.326	8.2136
1103.9	19.68	-6.1404	-13.617	-0.077837
1140.5	19.68	-6.1404	-14.245	-0.70497

Member length L=10 m
Load factor for temperature gamma=1

Plane frame analysis

Axial and bending effects can be analysed in a plane frame model.
Bending effects for hogging releasing moment:

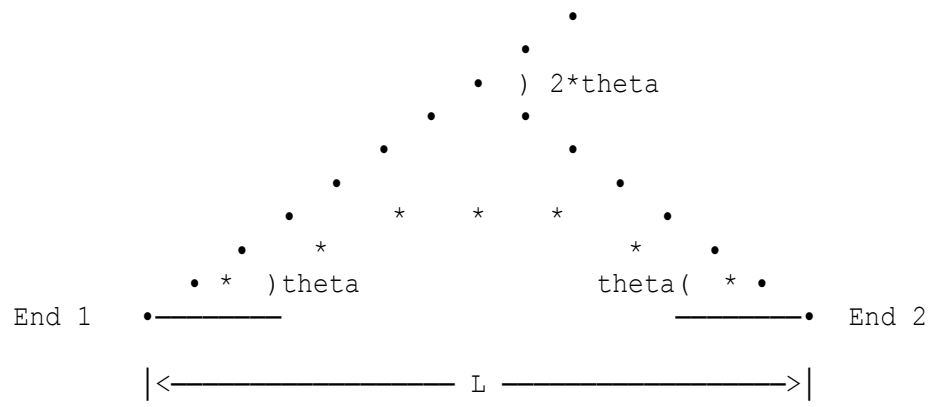

* * deflected shape of released member
•••• tangent to deflected shape at member ends

Calculate the angle (2*theta) in radians
where 2*theta =(RM*L)/(E*I)

```
          •                                 •
            •                             •
        •———•———————————————————————————•———•
            •                             •
          ◄•                                •►
```

NL-STRESS will apply the opposite of the releasing moment (RM) to the released member and rotate it by 2*theta. The member is then clamped in the frame and let go.

Member distortion (2*theta) mdfmp=(RM*L)/EI=-0.83584E-3 radians
Value of distortion for input to NL-STRESS
                  disfmp=mdfmp*gamma=-0.83584E-3 radians
The distortion should be input into the plane frame analysis using the MEMBER DISTORTIONS option with the following format.

<members> ROTATION Z -0.83584E-3

The equilibrating stresses should be taken into account when stresses at a section due to combinations of loading are calculated.
Longitudinal effects for compressive releasing force:
Released member •—— ——•

```
      |<———————————————— L ————————————————>|
      |<——dL——>|                            |

      *— — — — •———————————————————————————•
```

Calculate the contraction of the member dL=(RF*L)/(A*E) in metres

NL-STRESS will apply the opposite of the releasing force (RF) to the released member and extend it by dL. The member is then clamped in the frame and let go.

Member distortion mdffr=(RF*L)*1000/EQ1=-0.29953E-3 m
Value of distortion for input to NL-STRESS
                  disffr=mdffr*gamma=-0.29953E-3 m
The value should be input into the plane frame analysis using the MEMBER DISTORTIONS option with the following format.

<members> DISTORTION X -0.29953E-3

The equilibrating stresses should be taken into account when stresses at a section due to combinations of loading are calculated.

Location: Ex2 - Inner beam

Differential temperature effects in composite bridge decks to BD 37/01

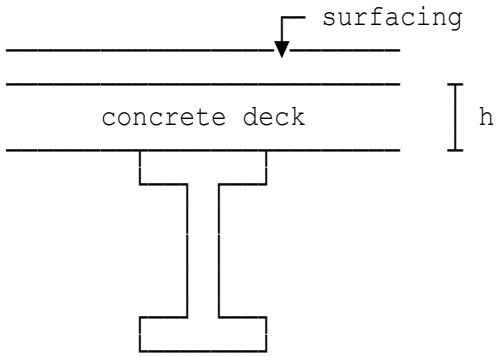

Deck on Truss or Plate Girders

Concrete slab depth	h=200 mm
Depth of surfacing	ds=150 mm
Number of cross-sections	ncs=7
Breadth at top	xbt(11)=1000 mm
Breadth at bottom	xbb(11)=800 mm
Depth	xd(11)=125 mm
Material (1=Steel , 2=Concrete)	mi(11)=2
Young's modulus	E(11)=31000 N/mm²
Coefficient of expansion	coe(11)=12E-6 /°C
Breadth at top	xbt(21)=800 mm
Breadth at bottom	xbb(21)=800 mm
Depth	xd(21)=75 mm
Material (1=Steel , 2=Concrete)	mi(21)=2
Young's modulus	E(21)=25000 N/mm²
Coefficient of expansion	coe(21)=10E-6 /°C
Breadth at top	xbt(31)=800 mm
Breadth at bottom	xbb(31)=800 mm
Depth	xd(31)=15 mm
Material (1=Steel , 2=Concrete)	mi(31)=1
Young's modulus	E(31)=205000 N/mm²
Coefficient of expansion	coe(31)=12E-6 /°C
Breadth at top	xbt(41)=200 mm
Breadth at bottom	xbb(41)=15 mm
Depth	xd(41)=50 mm
Material (1=Steel , 2=Concrete)	mi(41)=1
Young's modulus	E(41)=195000 N/mm²
Coefficient of expansion	coe(41)=11E-6 /°C
Breadth at top	xbt(51)=15 mm
Breadth at bottom	xbb(51)=15 mm
Depth	xd(51)=600 mm
Material (1=Steel , 2=Concrete)	mi(51)=1
Young's modulus	E(51)=190000 N/mm²
Coefficient of expansion	coe(51)=10E-6 /°C
Breadth at top	xbt(61)=15 mm

Breadth at bottom	xbb(61)=400 mm
Depth	xd(61)=75 mm
Material (1=Steel , 2=Concrete)	mi(61)=1
Young's modulus	E(61)=210000 N/mm²
Coefficient of expansion	coe(61)=13E-6 /°C
Breadth at top	xbt(71)=600 mm
Breadth at bottom	xbb(71)=600 mm
Depth	xd(71)=15 mm
Material (1=Steel , 2=Concrete)	mi(71)=1
Young's modulus	E(71)=240000 N/mm²
Coefficient of expansion	coe(71)=15E-6 /°C

Positive temperature calculations

Temperature gradient – increments	of depth (Figure 9, BD 37/01)
Depth h1	hp1=0.6*h=120 mm
Depth h2	hp2=0.4*h+400=480 mm
Depth h3	hp3=tsd-400-h=355 mm
Temperature values (Figure 9 & Table 23 in BD 37/01):	
Temperature T1	TP1=TABLE 1 for h=200, ds=150 =10.5 °C
Temperature T2	TP2=4 °C

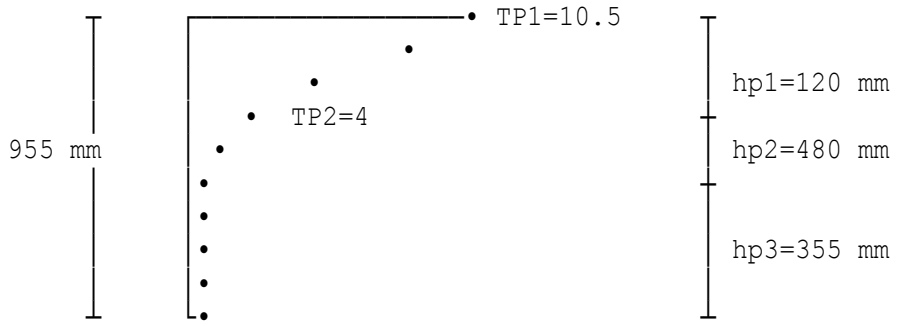

Positive temperature diagram

STRESSES (N/mm²) (tension is positive)

Depth from top	Restrained	Releasing force	Releasing moment	Self equilibrating
0	-3.906	0.99741	1.1522	-1.7564
120	-1.488	0.99741	0.8523	0.36171
125	-1.4725	0.99741	0.83981	0.36472
125	-0.98958	0.80437	0.67726	0.49205
200	-0.83333	0.80437	0.52612	0.49715
200	-8.2	6.5958	4.3142	2.71
215	-7.8925	6.5958	4.0663	2.7696
215	-6.8819	6.2741	3.868	3.2601
265	-5.9881	6.2741	3.082	3.3679
265	-5.3042	6.1132	3.003	3.812
600	0	6.1132	-2.1278	3.9854

865	0	6.1132	-6.1865	-0.073336
865	0	6.7567	-6.8377	-0.081055
940	0	6.7567	-8.1073	-1.3507
940	0	7.7219	-9.2655	-1.5436
955	0	7.7219	-9.5557	-1.8338

Member length L=10 m
Load factor for temperature gamma=1

Plane frame analysis

Axial and bending effects can be analysed in a plane frame model.
Bending effects for hogging releasing moment:

```
                                    •
                                  •
                                •  ) 2*theta
                              •     •
                            •           •
                          •               •
                        •     *    *    *     •
                      •    *                  *    •
                    • *  )theta               theta(  * •
   End 1          •————————                        ————————•  End 2

                 |<————————————————— L —————————————————>|

        *  *    deflected shape of released member
        ••••    tangent to deflected shape at member ends

           Calculate the angle ( 2*theta ) in radians
                   where 2*theta =(RM*L)/(E*I)
              •                                       •
                •                                   •
             •————•————————————————————————————•————•
                •                                   •
               ◀•                                    •▶
```

NL-STRESS will apply the opposite of the releasing moment (RM) to the released member and rotate it by 2*theta. The member is then clamped in the frame and let go.

Member distortion (2*theta) mdfmp=(RM*L)/EI=-0.8061E-3 radians
Value of distortion for input to NL-STRESS
disfmp=mdfmp*gamma=-0.8061E-3 radians
The distortion should be input into the plane frame analysis using the MEMBER DISTORTIONS option with the following format.

<members> ROTATION Z -0.8061E-3

The equilibrating stresses should be taken into account when stresses at a section due to combinations of loading are calculated.

Longitudinal effects for tensile releasing force:
Released member •—— ——•

```
|<——dL——>|<———————————— L ————————————>|

•————————*————————————————————————————•
```

Calculate the extension of the member dL=(RF*L)/(A*E) in metres

NL-STRESS will apply the opposite of the releasing force (RF) to the released member and compress it by dL. The member is then clamped in the frame and let go.

Member distortion mdffp=(RF*L)*1000/EQ1=0.32175E-3 m
Value of distortion for input to NL-STRESS
disffp=mdffp*gamma=0.32175E-3 m
The value should be input into the plane frame analysis using the MEMBER DISTORTIONS option with the following format.

<members> DISTORTION X 0.32175E-3

The equilibrating stresses should be taken into account when stresses at a section due to combinations of loading are calculated.

Reverse temperature calculations

Temperature gradient — increments of depth (Figure 9, BD 37/01)
Depth h1 hn1=0.6*h=120 mm
Depth h2 hn2=0.4*h=80 mm
Depth h3 hn3=400 mm
Depth h4 hn4=tsd-h-400=355 mm
Temperature values (Figure 9 & Table 23 in BD 37/01):
Temperature T1 TR1=TABLE 2 for h=200, ds=150
=-2.3 °C
Temperature T2 TR2=-8 °C
Temperature T3 TR3=-8 °C

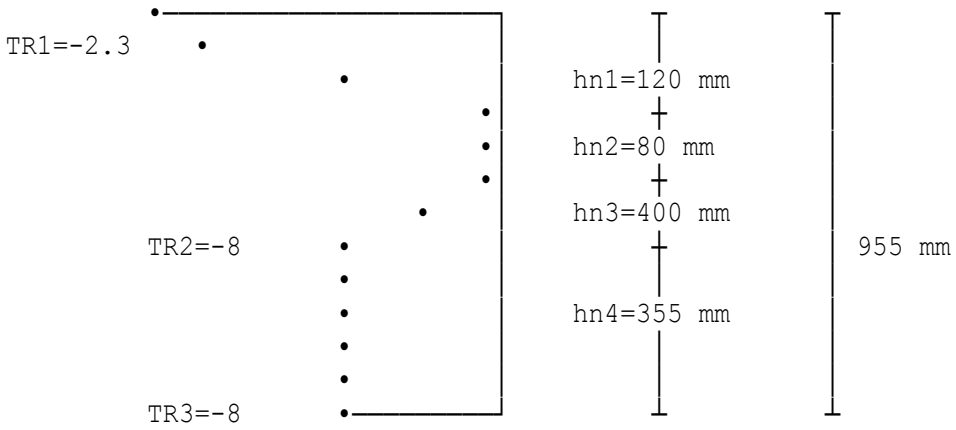

Reverse temperature diagram

STRESSES (N/mm²) (tension is positive)

Depth from top	Restrained	Releasing force	Releasing moment	Self equilibrating
0	0.8556	-1.5148	1.808	1.1488
120	0	-1.5148	1.3374	-0.17738
125	0	-1.5148	1.3178	-0.19699
125	0	-1.2216	1.0628	-0.15886
200	0	-1.2216	0.8256	-0.39604
200	0	-10.017	6.7699	-3.2475
215	0.738	-10.017	6.3809	-2.8985
215	0.6435	-9.5288	6.0697	-2.8156
265	2.7885	-9.5288	4.8364	-1.9039
265	2.47	-9.2844	4.7123	-2.1021
600	15.2	-9.2844	-3.339	2.5766
865	15.2	-9.2844	-9.708	-3.7924
865	21.84	-10.262	-10.73	0.84836
940	21.84	-10.262	-12.722	-1.1439
940	28.8	-11.728	-14.54	2.5327
955	28.8	-11.728	-14.995	2.0773

Member length L=10 m
Load factor for temperature gamma=1

Plane frame analysis

Axial and bending effects can be analysed in a plane frame model.
Bending effects for hogging releasing moment:

```
                                    •
                                  •
                                •  ) 2*theta
                              •     •
                            •           •
                          •               •
                        •      *    *    *      •
                      •    *                  *    •
                   • *  )theta               theta(  * •
   End 1    •————————                          ————————•  End 2

            |<————————————————— L —————————————————>|
```

* * deflected shape of released member
•••• tangent to deflected shape at member ends

Calculate the angle (2*theta) in radians
where 2*theta =(RM*L)/(E*I)

```
            •                                 •
              •                             •
          •———•———————————————————————————•———•
              •                             •
            ◀•                                •▶
```

NL-STRESS will apply the opposite of the releasing moment (RM) to the released member and rotate it by 2*theta. The member is then clamped in the frame and let go.

Member distortion (2*theta) mdfmp=(RM*L)/EI=-0.0012649 radians
Value of distortion for input to NL-STRESS
                  disfmp=mdfmp*gamma=-0.0012649 radians
The distortion should be input into the plane frame analysis using the MEMBER DISTORTIONS option with the following format.

<members> ROTATION Z -0.0012649

The equilibrating stresses should be taken into account when stresses at a section due to combinations of loading are calculated.
Longitudinal effects for compressive releasing force:
Released member •—— ——•

```
      |<———————————————— L ————————————————>|
      |<——dL——>|                            |

      *— — — — •———————————————————————————•
```

Calculate the contraction of the member dL=(RF*L)/(A*E) in metres

NL-STRESS will apply the opposite of the releasing force (RF) to the released member and extend it by dL. The member is then clamped in the frame and let go.

Member distortion mdffr=(RF*L)*1000/EQ1=-0.48865E-3 m
Value of distortion for input to NL-STRESS
                  disffr=mdffr*gamma=-0.48865E-3 m
The value should be input into the plane frame analysis using the MEMBER DISTORTIONS option with the following format.

<members> DISTORTION X -0.48865E-3

The equilibrating stresses should be taken into account when stresses at a section due to combinations of loading are calculated.

Location: Ex1 -Inner beam

Differential temperature effects in composite bridge decks

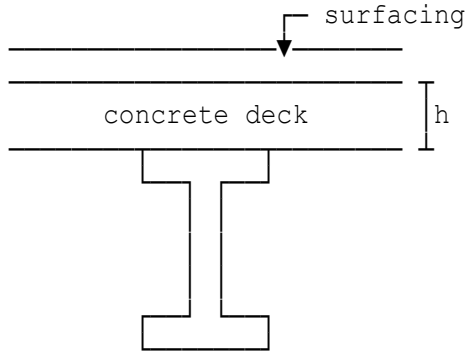

Deck on Truss or Plate Girders

Calculations in accordance with BS EN 1994-2:2005, NA to BS EN 1994-2:2005 and also BS EN 1991-1-5:2003 (reference Clause 5.4.2.5 "Temperature effects").

Concrete slab depth	h=220 mm
Depth of surfacing	ds=100 mm
Value of Young's modulus	EMC=31000 N/mm²
Coefficient of expansion	alphac=12E-6 /°C
Value of Young's modulus	EMS=210000 N/mm²
Coefficient of expansion	alphas=12E-6 /°C
Number of cross-sections	ncs=4
Breadth at top	xbt(11)=2744 mm
Breadth at bottom	xbb(11)=2744 mm
Depth	xd(11)=220 mm
Material (1=Steel , 2=Concrete)	mi(11)=2
Breadth at top	xbt(21)=420.5 mm
Breadth at bottom	xbb(21)=420.5 mm
Depth	xd(21)=36.6 mm
Material (1=Steel , 2=Concrete)	mi(21)=1
Breadth at top	xbt(31)=21.5 mm
Breadth at bottom	xbb(31)=21.5 mm
Depth	xd(31)=847.3 mm
Material (1=Steel , 2=Concrete)	mi(31)=1
Breadth at top	xbt(41)=420.5 mm
Breadth at bottom	xbb(41)=420.5 mm
Depth	xd(41)=36.6 mm
Material (1=Steel , 2=Concrete)	mi(41)=1

Positive temperature calculations

Temperature gradient – increments	of depth (Figure 6.2b, EN 1991-1-5)
Depth h1	hp1=0.6*h=132 mm
Depth h2	hp2=0.4*h+400=488 mm
Depth h3	hp3=tsd-400-h=520.5 mm
Temperature values (Figure 6.2b &	Table B.2 in EN 1991-1-5):
Temperature T1	TP1=TABLE 1 for h=220, ds=100 =13.6 °C
Temperature T2	TP2=4 °C

```
                 ┌──────────────────• TP1=13.6
                 │              •
                 │        •                          hp1=132 mm
                 │     •  TP2=4
     1140.5 mm   │  •                                hp2=488 mm
                 │•
                 │•
                 │•                                  hp3=520.5 mm
                 │•
                 └•
```

Positive temperature diagram

STRESSES (N/mm²) (tension is positive)

Depth from top	Restrained	Releasing force	Releasing moment	Self equilibrating
0	-5.0592	1.7778	0.93114	-2.3503
132	-1.488	1.7778	0.53758	0.82738
220	-1.2197	1.7778	0.27521	0.83333
220	-8.2623	12.043	1.8643	5.6452
256.6	-7.5063	12.043	1.1251	5.6619
620	0	12.043	-6.2146	5.8285
1103.9	0	12.043	-15.988	-3.945
1140.5	0	12.043	-16.727	-4.6842

Member length L=10 m
Load factor for temperature gamma=1

Plane frame analysis

Axial and bending effects can be analysed in a plane frame model.
Bending effects for hogging releasing moment:

```
                                    •
                                  •
                                •  ) 2*theta
                              •     •
                            •         •
                          •             •
                        •     *    *    *     •
                      •    *                 *    •
                    • *  )theta             theta(  * •
   End 1    •────────                        ────────•  End 2

            |<──────────────── L ──────────────>|

        *  *    deflected shape of released member
        ••••    tangent to deflected shape at member ends

           Calculate the angle ( 2*theta ) in radians
                   where 2*theta =(RM*L)/(E*I)
```

```
              •                                 •
                •                             •
            •———•———————————————————————————•———•
                •                             •
              ◀•                              •▶
```

NL-STRESS will apply the opposite of the releasing moment (RM) to the released member and rotate it by 2*theta. The member is then clamped in the frame and let go.

Member distortion (2*theta) mdfmp=(RM*L)/EI=-0.96178E-3 radians
Value of distortion for input to NL-STRESS
                  disfmp=mdfmp*gamma=-0.96178E-3 radians
The distortion should be input into the plane frame analysis using the MEMBER DISTORTIONS option with the following format.

<members> ROTATION Z -0.96178E-3

The equilibrating stresses should be taken into account when stresses at a section due to combinations of loading are calculated.
Longitudinal effects for tensile releasing force:
Released member •—— ——•

```
|<——dL——>|<————————————————— L —————————————————>|

•————————*————————————————————————————————————————•
```

Calculate the extension of the member dL=(RF*L)/(A*E) in metres

NL-STRESS will apply the opposite of the releasing force (RF) to the released member and compress it by dL. The member is then clamped in the frame and let go.

Member distortion mdffp=(RF*L)*1000/EQ1=0.57348E-3 m
Value of distortion for input to NL-STRESS
                  disffp=mdffp*gamma=0.57348E-3 m
The value should be input into the plane frame analysis using the MEMBER DISTORTIONS option with the following format.

<members> DISTORTION X 0.57348E-3

The equilibrating stresses should be taken into account when stresses at a section due to combinations of loading are calculated.

Reverse temperature calculations

Temperature gradient — increments of depth (Figure 6.2b, EN 1991-1-5)
Depth h1 hn1=0.6*h=132 mm
Depth h2 hn2=0.4*h=88 mm
Depth h3 hn3=400 mm
Depth h4 hn4=tsd-h-400=520.5 mm
Temperature values (Figure 6.2b & Table B.2 in EN 1991-1-5):
Temperature T1 TR1=TABLE 2 for h=220, ds=100
                =-3.8 °C
Temperature T2 TR2=-8 °C
Temperature T3 TR3=-8 °C

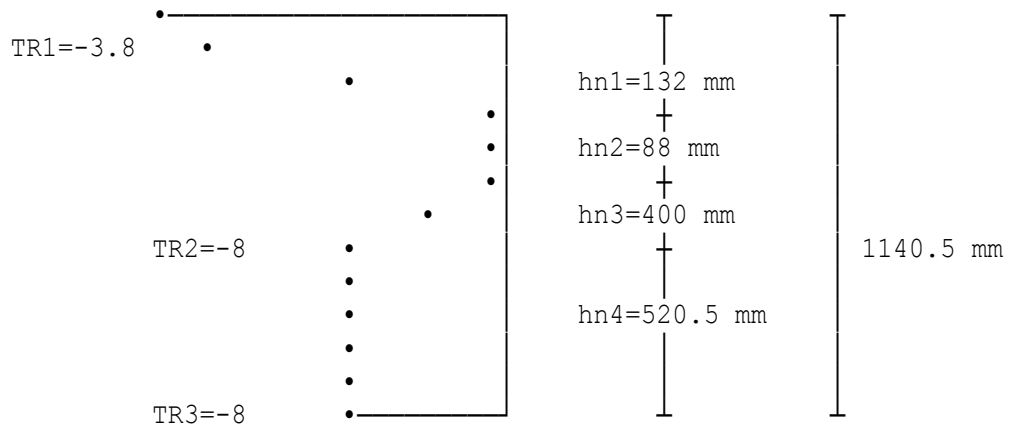

Reverse temperature diagram

STRESSES (N/mm²) (tension is positive)

Depth from top	Restrained	Releasing force	Releasing moment	Self equilibrating
0	1.4136	-0.93649	0.81078	1.2879
132	0	-0.93649	0.46809	-0.4684
220	0	-0.93649	0.23963	-0.69685
220	0	-6.3439	1.6233	-4.7206
256.6	1.8446	-6.3439	0.97966	-3.5196
620	20.16	-6.3439	-5.4113	8.4048
1103.9	20.16	-6.3439	-13.921	-0.10529
1140.5	20.16	-6.3439	-14.565	-0.74895

Member length L=10 m
Load factor for temperature gamma=1

Plane frame analysis

Axial and bending effects can be analysed in a plane frame model.
Bending effects for hogging releasing moment:

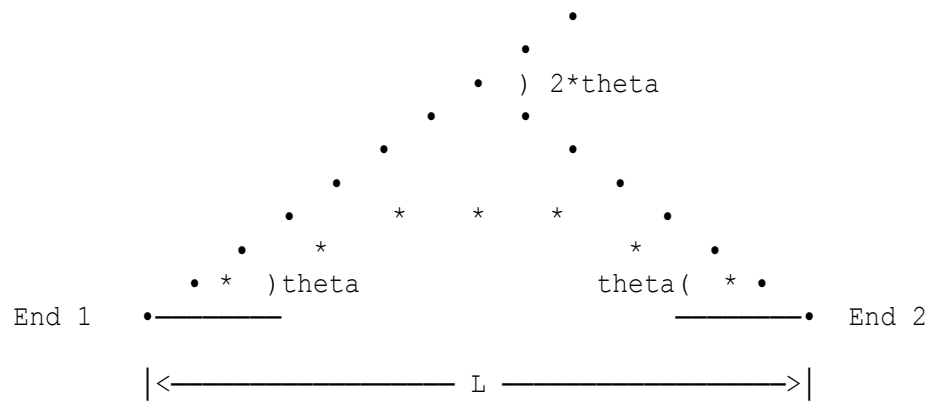

* * deflected shape of released member
•••• tangent to deflected shape at member ends

Calculate the angle (2*theta) in radians
where 2*theta =(RM*L)/(E*I)

```
          •                                 •
            •                             •
        •———•———————————————————————————•———•
            •                             •
          ◀•                              •▶
```

NL-STRESS will apply the opposite of the releasing moment (RM) to the released member and rotate it by 2*theta. The member is then clamped in the frame and let go.

Member distortion (2*theta) mdfmp=(RM*L)/EI=-0.83745E-3 radians
Value of distortion for input to NL-STRESS
                  disfmp=mdfmp*gamma=-0.83745E-3 radians
The distortion should be input into the plane frame analysis using the MEMBER DISTORTIONS option with the following format.

<members> ROTATION Z -0.83745E-3

The equilibrating stresses should be taken into account when stresses at a section due to combinations of loading are calculated.
Longitudinal effects for compressive releasing force:
Released member •—— ——•

```
|<———————————————— L ————————————————>|
|<——dL——>|                           |

*— — — — •———————————————————————————•
```

Calculate the contraction of the member dL=(RF*L)/(A*E) in metres

NL-STRESS will apply the opposite of the releasing force (RF) to the released member and extend it by dL. The member is then clamped in the frame and let go.

Member distortion mdffr=(RF*L)*1000/EQ1=-0.30209E-3 m
Value of distortion for input to NL-STRESS
                  disffr=mdffr*gamma=-0.30209E-3 m
The value should be input into the plane frame analysis using the MEMBER DISTORTIONS option with the following format.

<members> DISTORTION X -0.30209E-3

The equilibrating stresses should be taken into account when stresses at a section due to combinations of loading are calculated.

Location: Ex2 - Inner beam

Differential temperature effects in composite bridge decks

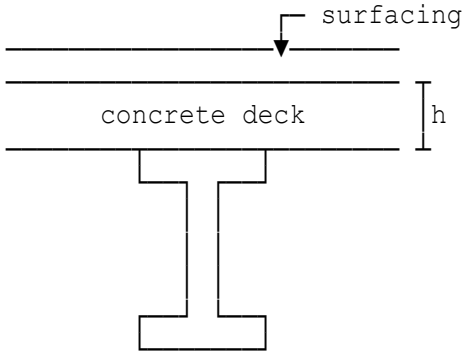

Deck on Truss or Plate Girders

Calculations in accordance with BS EN 1994-2:2005, NA to BS EN 1994-2:2005 and also BS EN 1991-1-5:2003 (reference Clause 5.4.2.5 "Temperature effects").

Concrete slab depth	h=200 mm
Depth of surfacing	ds=150 mm
Number of cross-sections	ncs=7
Breadth at top	xbt(11)=1000 mm
Breadth at bottom	xbb(11)=800 mm
Depth	xd(11)=125 mm
Material (1=Steel , 2=Concrete)	mi(11)=2
Young's modulus	E(11)=31000 N/mm²
Coefficient of expansion	coe(11)=12E-6 /°C
Breadth at top	xbt(21)=800 mm
Breadth at bottom	xbb(21)=800 mm
Depth	xd(21)=75 mm
Material (1=Steel , 2=Concrete)	mi(21)=2
Young's modulus	E(21)=25000 N/mm²
Coefficient of expansion	coe(21)=10E-6 /°C
Breadth at top	xbt(31)=800 mm
Breadth at bottom	xbb(31)=800 mm
Depth	xd(31)=15 mm
Material (1=Steel , 2=Concrete)	mi(31)=1
Young's modulus	E(31)=210000 N/mm²
Coefficient of expansion	coe(31)=12E-6 /°C
Breadth at top	xbt(41)=200 mm
Breadth at bottom	xbb(41)=15 mm
Depth	xd(41)=50 mm
Material (1=Steel , 2=Concrete)	mi(41)=1
Young's modulus	E(41)=195000 N/mm²
Coefficient of expansion	coe(41)=11E-6 /°C
Breadth at top	xbt(51)=15 mm
Breadth at bottom	xbb(51)=15 mm
Depth	xd(51)=600 mm
Material (1=Steel , 2=Concrete)	mi(51)=1
Young's modulus	E(51)=190000 N/mm²
Coefficient of expansion	coe(51)=10E-6 /°C
Breadth at top	xbt(61)=15 mm
Breadth at bottom	xbb(61)=400 mm
Depth	xd(61)=75 mm

Material (1=Steel , 2=Concrete)	mi(61)=1
Young's modulus	E(61)=210000 N/mm²
Coefficient of expansion	coe(61)=13E-6 /°C
Breadth at top	xbt(71)=600 mm
Breadth at bottom	xbb(71)=600 mm
Depth	xd(71)=15 mm
Material (1=Steel , 2=Concrete)	mi(71)=1
Young's modulus	E(71)=240000 N/mm²
Coefficient of expansion	coe(71)=15E-6 /°C

Positive temperature calculations

Temperature gradient – increments	of depth (Figure 6.2b, EN 1991-1-5)
Depth h1	hp1=0.6*h=120 mm
Depth h2	hp2=0.4*h+400=480 mm
Depth h3	hp3=tsd-400-h=355 mm
Temperature values (Figure 6.2b &	Table B.2 in EN 1991-1-5):
Temperature T1	TP1=TABLE 1 for h=200, ds=150 =10.5 °C
Temperature T2	TP2=4 °C

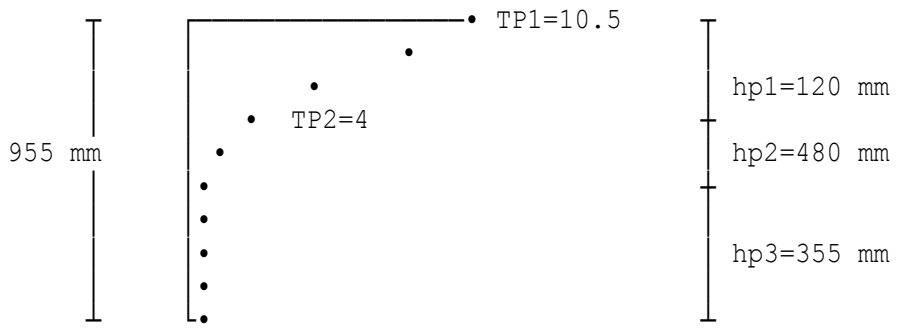

Positive temperature diagram

STRESSES (N/mm²) (tension is positive)

Depth from top	Restrained	Releasing force	Releasing moment	Self equilibrating
0	-3.906	0.99825	1.1484	-1.7593
120	-1.488	0.99825	0.84889	0.35915
125	-1.4725	0.99825	0.83641	0.36217
125	-0.98958	0.80504	0.67453	0.48999
200	-0.83333	0.80504	0.52356	0.49527
200	-8.4	6.7624	4.3979	2.7602
215	-8.085	6.7624	4.1443	2.8216
215	-6.8819	6.2793	3.8483	3.2457
265	-5.9881	6.2793	3.0632	3.3544
265	-5.3042	6.1183	2.9847	3.7988
600	0	6.1183	-2.1402	3.9781
865	0	6.1183	-6.1942	-0.07586

865	0	6.7624	-6.8462	-0.083846
940	0	6.7624	-8.1143	-1.352
940	0	7.7284	-9.2735	-1.5451
955	0	7.7284	-9.5634	-1.835

Member length L=10 m
Load factor for temperature gamma=1

Plane frame analysis

Axial and bending effects can be analysed in a plane frame model.
Bending effects for hogging releasing moment:

```
                                    •
                                  •
                               •  ) 2*theta
                            •     •
                         •           •
                      •                 •
                   •      *    *    *      •
                •    *                  *    •
             • *  )theta               theta(  * •
   End 1   •————————                        ————————•  End 2

           |<————————————————— L —————————————————>|

       *  *    deflected shape of released member
       ••••    tangent to deflected shape at member ends

          Calculate the angle ( 2*theta ) in radians
                  where 2*theta =(RM*L)/(E*I)
             •                                   •
               •                               •
            •————•———————————————————————————•————•
                •                               •
              ◀•                                 •▶
```

NL-STRESS will apply the opposite of the releasing moment (RM) to the released member and rotate it by 2*theta. The member is then clamped in the frame and let go.

Member distortion (2*theta) mdfmp=(RM*L)/EI=-0.80516E-3 radians
Value of distortion for input to NL-STRESS
disfmp=mdfmp*gamma=-0.80516E-3 radians
The distortion should be input into the plane frame analysis using the MEMBER DISTORTIONS option with the following format.

<members> ROTATION Z -0.80516E-3

The equilibrating stresses should be taken into account when stresses at a section due to combinations of loading are calculated.

Longitudinal effects for tensile releasing force:
Released member •—— ——•

```
|<——dL——>|<———————————— L ————————————>|

•————————*————————————————————————————•
```

Calculate the extension of the member dL=(RF*L)/(A*E) in metres

NL-STRESS will apply the opposite of the releasing force (RF) to the released member and compress it by dL. The member is then clamped in the frame and let go.

Member distortion mdffp=(RF*L)*1000/EQ1=0.32202E-3 m
Value of distortion for input to NL-STRESS
disffp=mdffp*gamma=0.32202E-3 m
The value should be input into the plane frame analysis using the MEMBER DISTORTIONS option with the following format.

<members> DISTORTION X 0.32202E-3

The equilibrating stresses should be taken into account when stresses at a section due to combinations of loading are calculated.

Reverse temperature calculations

Temperature gradient — increments of depth (Figure 6.2b, EN 1991-1-5)
Depth h1 hn1=0.6*h=120 mm
Depth h2 hn2=0.4*h=80 mm
Depth h3 hn3=400 mm
Depth h4 hn4=tsd-h-400=355 mm
Temperature values (Figure 6.2b & Table B.2 in EN 1991-1-5):
Temperature T1 TR1=TABLE 2 for h=200, ds=150
=-2.3 °C
Temperature T2 TR2=-8 °C
Temperature T3 TR3=-8 °C

```
          •————————————————————┐          ┬          ┬
TR1=-2.3    •                   │          │          │
                  •             │   hn1=120 mm        │
                            •   │          ┼          │
                            •   │   hn2=80 mm         │
                            •   │          ┼          │
                        •       │   hn3=400 mm        │
          TR2=-8        •       │          ┼          │ 955 mm
                        •       │          │          │
                        •       │   hn4=355 mm        │
                        •       │          │          │
                        •       │          │          │
          TR3=-8        •————————┘          ┴          ┴
```

Reverse temperature diagram

STRESSES (N/mm²) (tension is positive)

Depth from top	Restrained	Releasing force	Releasing moment	Self equilibrating
0	0.8556	-1.5092	1.8057	1.1521
120	0	-1.5092	1.3348	-0.1745
125	0	-1.5092	1.3151	-0.19412
125	0	-1.2171	1.0606	-0.15655
200	0	-1.2171	0.82321	-0.39392
200	0	-10.224	6.915	-3.3089
215	0.756	-10.224	6.5162	-2.9517
215	0.6435	-9.4937	6.0508	-2.7994
265	2.7885	-9.4937	4.8164	-1.8887
265	2.47	-9.2502	4.6929	-2.0873
600	15.2	-9.2502	-3.3651	2.5847
865	15.2	-9.2502	-9.7394	-3.7896
865	21.84	-10.224	-10.765	0.85148
940	21.84	-10.224	-12.759	-1.1425
940	28.8	-11.685	-14.581	2.5343
955	28.8	-11.685	-15.037	2.0786

Member length L=10 m
Load factor for temperature gamma=1

Plane frame analysis

Axial and bending effects can be analysed in a plane frame model.
Bending effects for hogging releasing moment:

```
                                    •
                                  •
                                •  ) 2*theta
                              •     •
                            •           •
                          •               •
                        •      *    *    *      •
                      •    *                  *    •
                   • *  )theta               theta(  * •
   End 1    •————————                          ————————•  End 2

            |<————————————————— L —————————————————>|
```

* * deflected shape of released member
•••• tangent to deflected shape at member ends

Calculate the angle (2*theta) in radians
where 2*theta =(RM*L)/(E*I)

```
            •                                 •
              •                             •
          •———•———————————————————————————•———•
              •                             •
            ◄•                                •►
```

NL-STRESS will apply the opposite of the releasing moment (RM) to the released member and rotate it by 2*theta. The member is then clamped in the frame and let go.

Member distortion (2*theta) mdfmp=(RM*L)/EI=-0.001266 radians
Value of distortion for input to NL-STRESS
                  disfmp=mdfmp*gamma=-0.001266 radians
The distortion should be input into the plane frame analysis using the MEMBER DISTORTIONS option with the following format.

<members> ROTATION Z -0.001266

The equilibrating stresses should be taken into account when stresses at a section due to combinations of loading are calculated.
Longitudinal effects for compressive releasing force:
Released member •—— ——•

```
      |<———————————————— L ————————————————>|
      |<——dL——>|                            |

      *— — — — •————————————————————————————•
```

Calculate the contraction of the member dL=(RF*L)/(A*E) in metres

NL-STRESS will apply the opposite of the releasing force (RF) to the released member and extend it by dL. The member is then clamped in the frame and let go.

Member distortion mdffr=(RF*L)*1000/EQ1=-0.48685E-3 m
Value of distortion for input to NL-STRESS
                  disffr=mdffr*gamma=-0.48685E-3 m
The value should be input into the plane frame analysis using the MEMBER DISTORTIONS option with the following format.

<members> DISTORTION X -0.48685E-3

The equilibrating stresses should be taken into account when stresses at a section due to combinations of loading are calculated.

Location: Ex1 - External beam

Shrinkage modified by creep in composite bridge decks to

BS5400-5:1979 & DOT Standard BD 16/82 (Amendment No. 1)

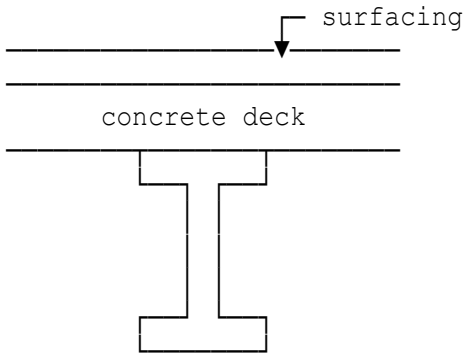

Deck on Truss or Plate Girders

Short term value of modulus	EMC=31000 N/mm²
Creep reduction factor	phic=0.4
Shrinkage strain	ecsc=-0.2E-3
Value of Young's modulus	EMS=205000 N/mm²
Number of cross-sections	ncs=4
Breadth at top	xbt(11)=2650 mm
Breadth at bottom	xbb(11)=2650 mm
Depth	xd(11)=220 mm
Material (1=Steel , 2=Concrete)	mi(11)=2
Breadth at top	xbt(21)=500 mm
Breadth at bottom	xbb(21)=500 mm
Depth	xd(21)=25 mm
Material (1=Steel , 2=Concrete)	mi(21)=1
Breadth at top	xbt(31)=12 mm
Breadth at bottom	xbb(31)=12 mm
Depth	xd(31)=1345 mm
Material (1=Steel , 2=Concrete)	mi(31)=1
Breadth at top	xbt(41)=600 mm
Breadth at bottom	xbb(41)=600 mm
Depth	xd(41)=30 mm
Material (1=Steel , 2=Concrete)	mi(41)=1

STRESSES (N/mm²) (tension is positive)

Depth from top	Restrained	Releasing force	Releasing moment	Self equilibrating
0	2.48	-1.0678	-0.83942	0.5728
220	2.48	-1.0678	-0.53981	0.87241
220	0	-17.653	-8.9243	-26.577
245	0	-17.653	-8.3614	-26.014
1590	0	-17.653	21.921	4.2682
1620	0	-17.653	22.596	4.9436

Member length L=10 m
Partial load factor for shrinkage gamma=1

Plane frame analysis

Axial and bending effects can be analysed in a plane frame model.
Bending effects for sagging releasing moment:

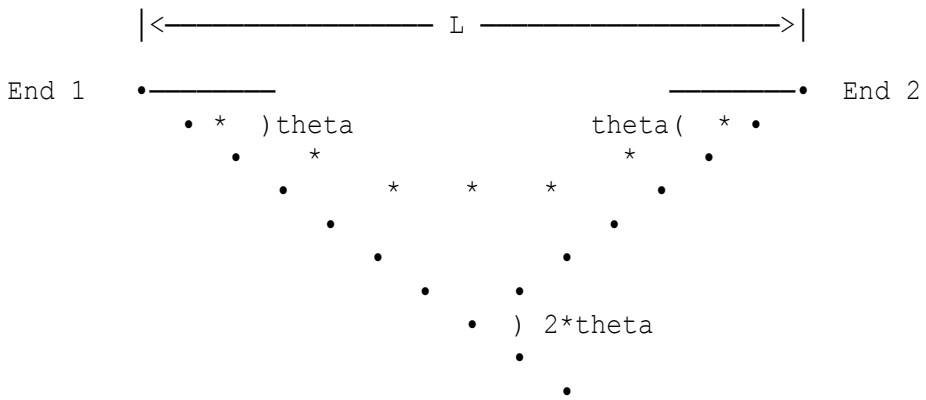

* * deflected shape of released member
•••• tangent to deflected shape at member ends

Calculate the angle (2*theta) in radians
where 2*theta =(RM*L)/(E*I)

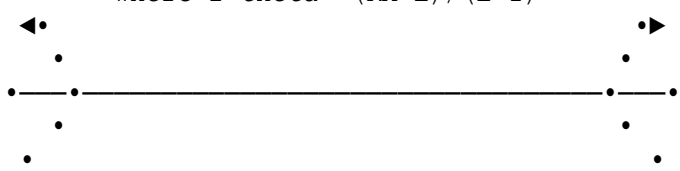

NL-STRESS will apply the opposite of the releasing moment (RM) to the released member and rotate it by 2*theta. The member is then clamped in the frame and let go.

Member distortion (2*theta) mdmfr=(RM*L)/EI=0.0010983 radians
Value of distortion for input to NL-STRESS
dismfr=mdmfr*gamma=0.0010983 radians
The distortion should be input into the plane frame analysis using the MEMBER DISTORTIONS option with the following format.

<members> ROTATION Z 0.0010983

The equilibrating stresses should be taken into account when stresses at a section due to combinations of loading are calculated.

Longitudinal effects for compressive releasing force:
Released member •—— ——•

```
|<———————————————— L ————————————————>|
|<——dL——>|                            |

*— — — — •————————————————————————————•
```

Calculate the contraction of the member dL=(RF*L)/(A*E) in metres

NL-STRESS will apply the opposite of the releasing force (RF) to the released member and extend it by dL. The member is then clamped in the frame and let go.

Member distortion mdffr=(RF*L)*1000/EQ1=-0.86111E-3 m
Value of distortion for input to NL-STRESS
disffr=mdffr*gamma=-0.86111E-3 m
The value should be input into the plane frame analysis using the MEMBER DISTORTIONS option with the following format.

<members> DISTORTION X -0.86111E-3

The equilibrating stresses should be taken into account when the stresses at a section due to combinations of loading are calculated.

Location: Ex2 - Inner beam

Shrinkage modified by creep in composite bridge decks to

BS5400-5:1979 & DOT Standard BD 16/82 (Amendment No. 1)

```
                          surfacing
                          concrete deck
                 \ \                  / /
                  \ \                / /
                   \ \              / /
                    \ \            / /
                     \ \_ _ _ _ __/ /
                      \_ _ _ _ _ _ /
                 Deck on box girders
```

Number of cross-sections	ncs=7
Breadth at top	xbt(11)=1000 mm
Breadth at bottom	xbb(11)=800 mm
Depth	xd(11)=125 mm
Material (1=Steel , 2=Concrete)	mi(11)=2
Creep reduction factor	phi(11)=0.3
Shrinkage strain	ecs(11)=-0.2E-3
Short term Young's modulus	ES(11)=31000 N/mm²
Breadth at top	xbt(21)=800 mm
Breadth at bottom	xbb(21)=800 mm
Depth	xd(21)=75 mm
Material (1=Steel , 2=Concrete)	mi(21)=2
Creep reduction factor	phi(21)=0.5
Shrinkage strain	ecs(21)=-0.3E-3
Short term Young's modulus	ES(21)=25000 N/mm²
Breadth at top	xbt(31)=800 mm
Breadth at bottom	xbb(31)=800 mm
Depth	xd(31)=15 mm
Material (1=Steel , 2=Concrete)	mi(31)=1
Young's modulus for steel	E(31)=205000 N/mm²
Breadth at top	xbt(41)=200 mm
Breadth at bottom	xbb(41)=15 mm
Depth	xd(41)=50 mm
Material (1=Steel , 2=Concrete)	mi(41)=1
Young's modulus for steel	E(41)=195000 N/mm²
Breadth at top	xbt(51)=15 mm
Breadth at bottom	xbb(51)=15 mm
Depth	xd(51)=600 mm
Material (1=Steel , 2=Concrete)	mi(51)=1
Young's modulus for steel	E(51)=190000 N/mm²
Breadth at top	xbt(61)=15 mm
Breadth at bottom	xbb(61)=400 mm
Depth	xd(61)=75 mm
Material (1=Steel , 2=Concrete)	mi(61)=1

Young's modulus for steel E(61)=210000 N/mm²
Breadth at top xbt(71)=600 mm
Breadth at bottom xbb(71)=600 mm
Depth xd(71)=15 mm
Material (1=Steel , 2=Concrete) mi(71)=1
Young's modulus for steel E(71)=240000 N/mm²

STRESSES (N/mm²) (tension is positive)

Depth from top	Restrained	Releasing force	Releasing moment	Self equilibrating
0	1.86	-0.32458	-0.63123	0.9042
125	1.86	-0.32458	-0.48975	1.0457
125	3.75	-0.43626	-0.65827	2.6555
200	3.75	-0.43626	-0.54418	2.7696
200	0	-7.1546	-8.9245	-16.079
215	0	-7.1546	-8.5503	-15.705
215	0	-6.8056	-8.1332	-14.939
265	0	-6.8056	-6.9466	-13.752
265	0	-6.6311	-6.7685	-13.4
865	0	-6.6311	7.1051	0.47398
865	0	-7.3291	7.853	0.52387
940	0	-7.3291	9.7697	2.4406
940	0	-8.3761	11.165	2.7893
955	0	-8.3761	11.604	3.2274

Member length L=10 m
Partial load factor for shrinkage gamma=1

Plane frame analysis

Axial and bending effects can be analysed in a plane frame model.
Bending effects for sagging releasing moment:

```
            |<---------------- L ------------------->|

   End 1    •--------                        --------•  End 2
              • *  )theta                theta(  * •
                 •    *                    *    •
                    •      *    *    *      •
                       •                 •
                          •           •
                             •     •
                                •  ) 2*theta
                                   •
                                      •

         *  *    deflected shape of released member
         ••••    tangent to deflected shape at member ends

          Calculate the angle ( 2*theta ) in radians
                  where 2*theta =(RM*L)/(E*I)
```

```
◄•                                    •►
  •                                  •
•——•————————————————————————————————•——•
  •                                  •
 •                                    •
```

NL-STRESS will apply the opposite of the releasing moment (RM) to the released member and rotate it by 2*theta. The member is then clamped in the frame and let go.

Member distortion (2*theta) mdmfr=(RM*L)/EI=0.001217 radians
Value of distortion for input to NL-STRESS
                  dismfr=mdmfr*gamma=0.001217 radians
The distortion should be input into the plane frame analysis using the MEMBER DISTORTIONS option with the following format.

```
<members> ROTATION Z 0.001217
```

The equilibrating stresses should be taken into account when stresses at a section due to combinations of loading are calculated.
Longitudinal effects for compressive releasing force:
Released member •—— ——•

```
|<———————————————— L ————————————————>|
|<——dL——>|                           |

*— — — — •————————————————————————————•
```

Calculate the contraction of the member dL=(RF*L)/(A*E) in metres

NL-STRESS will apply the opposite of the releasing force (RF) to the released member and extend it by dL. The member is then clamped in the frame and let go.

Member distortion mdffr=(RF*L)*1000/EQ1=-0.34901E-3 m
Value of distortion for input to NL-STRESS
                  disffr=mdffr*gamma=-0.34901E-3 m
The value should be input into the plane frame analysis using the MEMBER DISTORTIONS option with the following format.

```
<members> DISTORTION X -0.34901E-3
```

The equilibrating stresses should be taken into account when the stresses at a section due to combinations of loading are calculated.

Location: Ex1 - External beam

Shrinkage modified by creep in composite bridge decks to

BS EN 1992-1-1:2004 and BS EN 1994-2:2005

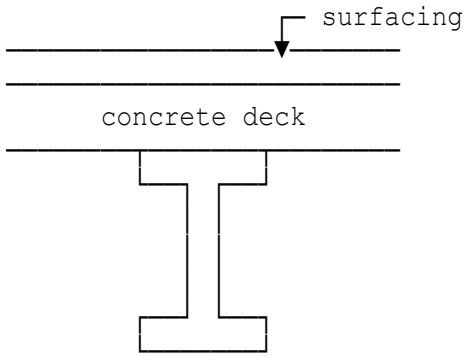

Deck on Truss or Plate Girders

Short term value of modulus	EMC=31000 N/mm²
Ambient relative humidity	RH=80 %
Total shrinkage strain	ecsc=-0.2E-3
Value of Young's modulus	EMS=210000 N/mm²
Number of cross-sections	ncs=4
Breadth at top	xbt(11)=2650 mm
Breadth at bottom	xbb(11)=2650 mm
Depth	xd(11)=220 mm
Material (1=Steel , 2=Concrete)	mi(11)=2
Total shrinkage strain	ecs(11)=ecsc=-0.2E-3
Breadth at top	xbt(21)=500 mm
Breadth at bottom	xbb(21)=500 mm
Depth	xd(21)=25 mm
Material (1=Steel , 2=Concrete)	mi(21)=1
Breadth at top	xbt(31)=12 mm
Breadth at bottom	xbb(31)=12 mm
Depth	xd(31)=1345 mm
Material (1=Steel , 2=Concrete)	mi(31)=1
Breadth at top	xbt(41)=600 mm
Breadth at bottom	xbb(41)=600 mm
Depth	xd(41)=30 mm
Material (1=Steel , 2=Concrete)	mi(41)=1

STRESSES (N/mm²) (tension is positive)

Depth from top	Restrained	Releasing force	Releasing moment	Self equilibrating
0	2.48	-1.0532	-0.84068	0.58617
220	2.48	-1.0532	-0.54315	0.8837
220	0	-17.836	-9.1985	-27.034
245	0	-17.836	-8.6259	-26.462
1590	0	-17.836	22.179	4.3437
1620	0	-17.836	22.866	5.0309

Member length L=10 m
Partial load factor for shrinkage gamma=1

Plane frame analysis

Axial and bending effects can be analysed in a plane frame model.
Bending effects for sagging releasing moment:

```
            |<---------------- L ------------------->|

   End 1    •--------                        --------•  End 2
              • *  )theta               theta(  * •
                •    *                    *    •
                   •      *    *    *      •
                      •                •
                         •           •
                            •     •
                               •  ) 2*theta
                                  •
                                    •
         *  *    deflected shape of released member
         ••••    tangent to deflected shape at member ends

          Calculate the angle ( 2*theta ) in radians
                  where 2*theta =(RM*L)/(E*I)
            <•                                    •>
              •                                  •
            •---•-----------------------------•---•
              •                                  •
             •                                    •
```

NL-STRESS will apply the opposite of the releasing moment (RM) to the released member and rotate it by 2*theta. The member is then clamped in the frame and let go.

Member distortion (2*theta) mdmfr=(RM*L)/EI=0.0010906 radians
Value of distortion for input to NL-STRESS
dismfr=mdmfr*gamma=0.0010906 radians
The distortion should be input into the plane frame analysis using the MEMBER DISTORTIONS option with the following format.

<members> ROTATION Z 0.0010906

The equilibrating stresses should be taken into account when stresses at a section due to combinations of loading are calculated.

Longitudinal effects for compressive releasing force:
Released member •—— ——•

```
|<———————————————— L ————————————————>|
|<——dL——>|                            |

*— — — — •————————————————————————————•
```

Calculate the contraction of the member dL=(RF*L)/(A*E) in metres

NL-STRESS will apply the opposite of the releasing force (RF) to the released member and extend it by dL. The member is then clamped in the frame and let go.

Member distortion mdffr=(RF*L)*1000/EQ1=-0.84932E-3 m
Value of distortion for input to NL-STRESS
disffr=mdffr*gamma=-0.84932E-3 m
The value should be input into the plane frame analysis using the MEMBER DISTORTIONS option with the following format.

<members> DISTORTION X -0.84932E-3

The equilibrating stresses should be taken into account when the stresses at a section due to combinations of loading are calculated.

Location: Ex2 - Inner beam

Shrinkage modified by creep in composite bridge decks to

BS EN 1992-1-1:2004 and BS EN 1994-2:2005

```
                        surfacing
_____________________________________
_____________________________________
            concrete deck
_____________________________________
      \ \                   / /
       \ \                 / /
        \ \               / /
         \ \             / /
          \ \_ _ _ _ __/ /
           \_ _ _ _ _ _ /
        Deck on box girders
```

Number of cross-sections	ncs=7
Breadth at top	xbt(11)=1000 mm
Breadth at bottom	xbb(11)=800 mm
Depth	xd(11)=125 mm
Material (1=Steel , 2=Concrete)	mi(11)=2
Ambient relative humidity	RH=80 %
Total shrinkage strain	ecs(11)=-0.2E-3
Short term Young's modulus	ES(11)=31000 N/mm²
Breadth at top	xbt(21)=800 mm
Breadth at bottom	xbb(21)=800 mm
Depth	xd(21)=75 mm
Material (1=Steel , 2=Concrete)	mi(21)=2
Ambient relative humidity	RH=80 %
Total shrinkage strain	ecs(21)=-0.3E-3
Short term Young's modulus	ES(21)=25000 N/mm²
Breadth at top	xbt(31)=800 mm
Breadth at bottom	xbb(31)=800 mm
Depth	xd(31)=15 mm
Material (1=Steel , 2=Concrete)	mi(31)=1
Young's modulus for steel	E(31)=210000 N/mm²
Breadth at top	xbt(41)=200 mm
Breadth at bottom	xbb(41)=15 mm
Depth	xd(41)=50 mm
Material (1=Steel , 2=Concrete)	mi(41)=1
Young's modulus for steel	E(41)=195000 N/mm²
Breadth at top	xbt(51)=15 mm
Breadth at bottom	xbb(51)=15 mm
Depth	xd(51)=600 mm
Material (1=Steel , 2=Concrete)	mi(51)=1
Young's modulus for steel	E(51)=190000 N/mm²
Breadth at top	xbt(61)=15 mm
Breadth at bottom	xbb(61)=400 mm
Depth	xd(61)=75 mm
Material (1=Steel , 2=Concrete)	mi(61)=1

Young's modulus for steel E(61)=210000 N/mm²
Breadth at top xbt(71)=600 mm
Breadth at bottom xbb(71)=600 mm
Depth xd(71)=15 mm
Material (1=Steel , 2=Concrete) mi(71)=1
Young's modulus for steel E(71)=240000 N/mm²

STRESSES (N/mm²) (tension is positive)

Depth from top	Restrained	Releasing force	Releasing moment	Self equilibrating
0	1.86	-0.32302	-0.62406	0.91292
125	1.86	-0.32302	-0.48377	1.0532
125	3.75	-0.43416	-0.65023	2.6656
200	3.75	-0.43416	-0.53709	2.7787
200	0	-7.2939	-9.0231	-16.317
215	0	-7.2939	-8.643	-15.937
215	0	-6.7729	-8.0256	-14.799
265	0	-6.7729	-6.849	-13.622
265	0	-6.5993	-6.6734	-13.273
865	0	-6.5993	7.0842	0.48494
865	0	-7.2939	7.8299	0.53598
940	0	-7.2939	9.7306	2.4367
940	0	-8.3359	11.121	2.7848
955	0	-8.3359	11.555	3.2193

Member length L=10 m
Partial load factor for shrinkage gamma=1

Plane frame analysis

Axial and bending effects can be analysed in a plane frame model.
Bending effects for sagging releasing moment:

```
            |<---------------- L ------------------->|

   End 1    •--------                        --------•  End 2
              • *  )theta                theta(  * •
                •    *                     *    •
                  •      *    *    *      •
                     •                 •
                        •           •
                           •     •
                              •  ) 2*theta
                                 •
                                    •
         *  *    deflected shape of released member
         ••••    tangent to deflected shape at member ends

          Calculate the angle ( 2*theta ) in radians
                  where 2*theta =(RM*L)/(E*I)
```

```
◄•                                    •►
  •                                  •
•——•————————————————————————————————•——•
  •                                  •
 •                                    •
```

NL-STRESS will apply the opposite of the releasing moment (RM) to the released member and rotate it by 2*theta. The member is then clamped in the frame and let go.

Member distortion (2*theta) mdmfr=(RM*L)/EI=0.0012068 radians
Value of distortion for input to NL-STRESS
                  dismfr=mdmfr*gamma=0.0012068 radians
The distortion should be input into the plane frame analysis using the MEMBER DISTORTIONS option with the following format.

<members> ROTATION Z 0.0012068

The equilibrating stresses should be taken into account when stresses at a section due to combinations of loading are calculated.
Longitudinal effects for compressive releasing force:
Released member •—— ——•

```
|<———————————————— L ————————————————>|
|<——dL——>|                           |

*— — — — •————————————————————————————•
```

Calculate the contraction of the member dL=(RF*L)/(A*E) in metres

NL-STRESS will apply the opposite of the releasing force (RF) to the released member and extend it by dL. The member is then clamped in the frame and let go.

Member distortion mdffr=(RF*L)*1000/EQ1=-0.34733E-3 m
Value of distortion for input to NL-STRESS
                  disffr=mdffr*gamma=-0.34733E-3 m
The value should be input into the plane frame analysis using the MEMBER DISTORTIONS option with the following format.

<members> DISTORTION X -0.34733E-3

The equilibrating stresses should be taken into account when the stresses at a section due to combinations of loading are calculated.

Location: Rectangular section with axial load and bending

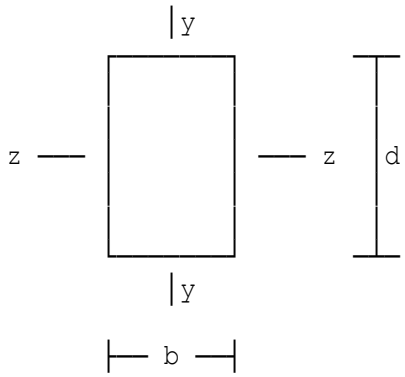

Rectangular timber member subject to axial load and bending about z-z axis

Calculations in accordance with BS5268-2:2002.

Design BM about zz (positive)	Mz=0.5 kNm
Design shear force in y direction	V=0 kN
Design axial load (+ve compress)	F=5 kN
Eff length for bending about zz	Lez'=2.346 m
Depth of section	d=97 mm
Width of section	b=97 mm
Eff length for bending about yy	Ley'=0 m
Strength class C18 to Table 8.	
Timber service class adopted	tmclass=1
Timber service class modification	factor K2=1 as Table 16.
Duration of loading	K3=1.25
Depth factor	K7=(300/d)^0.11=1.1322
Load-sharing modification factor	K8=1.0

Modification factor K12=(0.5+(1+eta)*C/2)-((0.5+(1+eta)*C/2)^2 -C)^0.5=0.4319

DESIGN SUMMARY

Depth of section	**97 mm**
Width of section	**97 mm**
Strength class C18 to Table 8.	
Timber moisture class	**1**
Applied comprn stress	**0.53141 N/mm²**
Permiss comprn stress	**3.8331 N/mm²**
Applied bending stress	**3.287 N/mm²**
Permiss bending stress	**8.2087 N/mm²**
Interaction factor	**0.55611**

Location: Example 2 User defined grade stresses

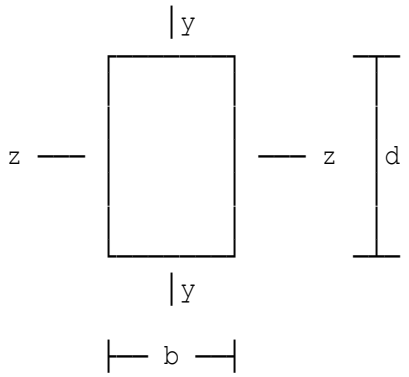

Rectangular timber member subject to axial load and bending about z-z axis

Calculations in accordance with BS5268-2:2002.

Design BM about zz (positive)	Mz=1.45 kNm
Design shear force in y direction	V=0 kN
Design axial load (+ve compress)	F=0 kN
Eff length for bending about zz	Lez'=2.346 m
Depth of section	d=122 mm
Width of section	b=97 mm
Eff length for bending about yy	Ley'=1.2 m
Douglas fir table 10	
Bending parallel to the grain	bparg=6.2 N/mm²
Compress parallel to the grain	cparg=6.6 N/mm²
Compress perpendicular to the grain	cperd=2.4 N/mm²
Tension parallel to the grain	tparg=3.7 N/mm²
Shear parallel to the grain	sparg=0.88 N/mm²
Mean modulus of elasticity	Emean=10000 N/mm²
Minimum modulus of elasticity	Emin=7000 N/mm²
Timber service class adopted	tmclass=1
Timber service class modification	factor K2=1 as Table 16.
Duration of loading	K3=1.25
Depth factor	K7=(300/d)^0.11=1.104
Load-sharing modification factor	K8=1.0 clause 2.10.11

DESIGN SUMMARY

Depth of section	**122 mm**
Width of section	**97 mm**
Douglas fir table 10	
Timber moisture class	**1**
Applied bending stress	**6.026 N/mm²**
Permiss bending stress	**8.5563 N/mm²**

Location: Example 3 TR20 grade stress

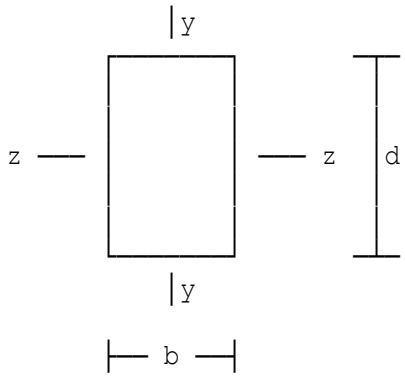

Rectangular timber member subject to axial load and bending about z-z axis

Calculations in accordance with BS5268-2:2002.

Design BM about zz (positive)	Mz=0 kNm
Design shear force in y direction	V=0 kN
Design axial load (+ve compress)	F=6.2 kN
Eff length for bending about zz	Lez'=3.6 m
Depth of section	d=97 mm
Width of section	b=97 mm
Eff length for bending about yy	Ley'=0 m
Strength class TR20 to Table 9.	
Timber service class adopted	tmclass=1
Timber service class modification	factor K2=1 as Table 16.
Duration of loading	K3=1.75
Load-sharing modification factor	K8=1.0

Modification factor K12=(0.5+(1+eta)*C/2)-((0.5+(1+eta)*C/2)^2 -C)^0.5=0.16348

DESIGN SUMMARY

Depth of section	**97 mm**
Width of section	**97 mm**
Strength class TR20 to Table 9.	
Timber moisture class	**1**
Applied comprn stress	**0.65894 N/mm²**
Permiss comprn stress	**2.0884 N/mm²**

Location: Example 4 C24 grade stress with tensile axial load

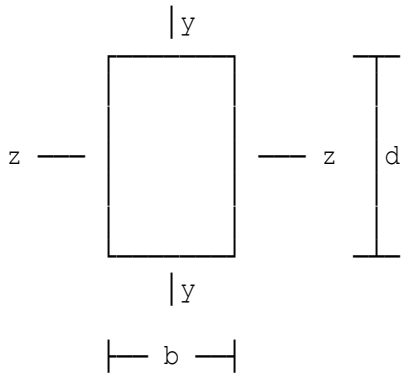

Rectangular timber member subject to axial load and bending about z-z axis

Calculations in accordance with BS5268-2:2002.

Design BM about zz (positive)	Mz=0.4953 kNm
Design shear force in y direction	V=0 kN
Design axial load (+ve compress)	F=-4.9 kN
Eff length for bending about zz	Lez'=2.346 m
Depth of section	d=97 mm
Width of section	b=97 mm
Eff length for bending about yy	Ley'=0 m
Strength class C24 to Table 8.	
Tensile area of cross section	At=7469 mm²
Timber service class adopted	tmclass=3
Timber stress grades and moduli adjusted as table 16.	
Duration of loading	K3=1.75
Depth factor	K7=(300/d)^0.11=1.1322
Load-sharing modification factor	K8=1.0

Width modification factor K14=(300/h)^0.11=1.1322

DESIGN SUMMARY

Depth of section	**97 mm**
Width of section	**97 mm**
Strength class C24 to Table 8.	
Tensile cross sec area	**7469 mm²**
Timber moisture class	**3**
Applied tension stress	**0.65604 N/mm²**
Permiss tension stress	**7.1331 N/mm²**
Applied bending stress	**3.2561 N/mm²**
Permiss bending stress	**11.889 N/mm²**
Interaction factor	**0.36586**

Location: Rectangular section with axial load and bending

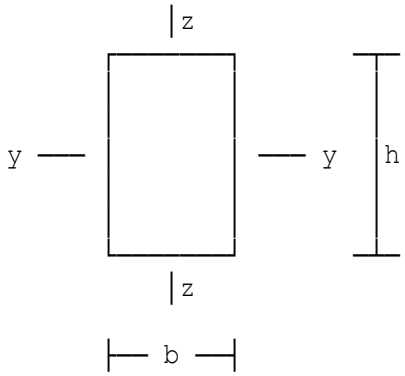

Rectangular timber section

With axial load and bending about y-y axis, in accordance with Eurocode 5 incorporating National Annex Amendment No.2.

Design BM about yy (positive)	Md=1.83 kNm
Design shear force in z direction	Vd=0 kN
Design axial load (+ve compress)	Nd=45.75 kN
Eff length for bending about yy	ley=3.75 m
Depth of section	h=250 mm
Width of section	b=100 mm
Eff length for bending about zz	lez=3.75 m
Timber strength class C22.	
Depth factor (Clause 3.2)	kh=1.0
Load-sharing modification factor	ksys=1.0
Instability factor	kcy=1/(ky+(ky^2-rsry^2)^0.5)=0.75898
Instability factor	kcz=1/(kz+(kz^2-rsrz^2)^0.5)=0.17917
Shear reduction factor	ksh=0.67
Effective length about zz	Le=3 m

DESIGN SUMMARY

Depth of section	**250 mm**
Width of section	**100 mm**
Timber strength class C22.	
Timber moisture class	**2**
Design compr. stress	**1.83 N/mm²**
Design compr. strength	**12.308 N/mm²**
Design bending stress	**1.7568 N/mm²**
Design bending strength	**13.538 N/mm²**
Interaction factor	**0.8467 ≤ 1**

Location: Example 2 User defined grade stresses

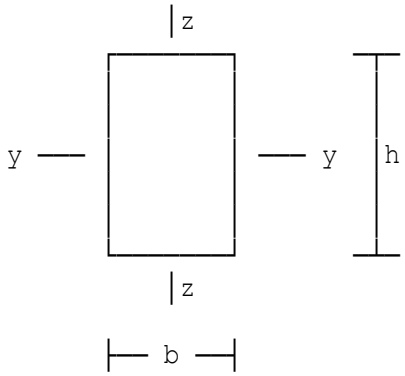

Rectangular timber section

With axial load and bending about y-y axis, in accordance with Eurocode 5 incorporating National Annex Amendment No.2.

Design BM about yy (positive)	Md=2.0735 kNm
Design shear force in z direction	Vd=0 kN
Design axial load (+ve compress)	Nd=0 kN
Eff length for bending about yy	ley=2.346 m
Depth of section	h=122 mm
Width of section	b=97 mm
Eff length for bending about zz	lez=1.2 m

Douglas fir

Bending parallel to the grain	fmk=24 N/mm²
Compress parallel to the grain	fc0k=21 N/mm²
Compress perp to the grain	fc90k=2.5 N/mm²
Tension parallel to the grain	ft0k=14 N/mm²
Shear parallel to the grain	fvk=2.5 N/mm²
Mean modulus of elasticity	E0mean=10000 N/mm²
5th percentile MOE	E005=7000 N/mm²
Depth factor (Clause 3.2)	kh=(150/h)^0.2=1.0422
Load-sharing modification factor	ksys=1.0
Shear reduction factor	ksh=0.67

DESIGN SUMMARY

Depth of section	**122 mm**
Width of section	**97 mm**
Douglas fir	
Timber moisture class	**1**
Design bending stress	**8.6172 N/mm²**
Design bending strength	**15.392 N/mm²**
Interaction factor	**0.55983 ≤ 1**

Location: Example 3

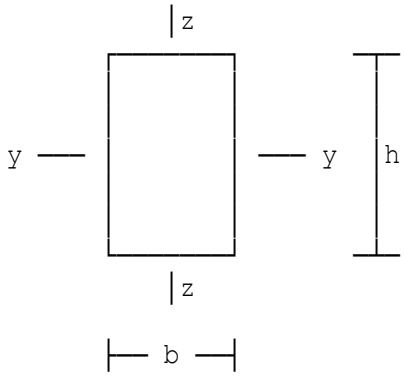

Rectangular timber section

With axial load and bending about y-y axis, in accordance with Eurocode 5 incorporating National Annex Amendment No.2.

Design BM about yy (positive)	Md=0 kNm
Design shear force in z direction	Vd=0 kN
Design axial load (+ve compress)	Nd=8.866 kN
Eff length for bending about yy	ley=3.6 m
Depth of section	h=97 mm
Width of section	b=97 mm
Eff length for bending about zz	lez=0 m
Timber strength class D70.	
Depth factor (Clause 3.2)	kh=(150/h)^0.2=1.0911
Load-sharing modification factor	ksys=1.0
Instability factor	kcy=1/(ky+(ky^2-rsry^2)^0.5)=0.24917
Instability factor	kcz=1/(kz+(kz^2-rsrz^2)^0.5)=1.0638
Max instability factor	kcz=1
Shear reduction factor	ksh=0.67

DESIGN SUMMARY

Depth of section	**97 mm**
Width of section	**97 mm**
Timber strength class D70.	
Timber moisture class	**1**
Design compr. stress	**0.94229 N/mm²**
Design compr. strength	**30.462 N/mm²**
Interaction factor	**0.12415 ≤ 1**

Location: Example 4 C24 grade stress with tensile axial load

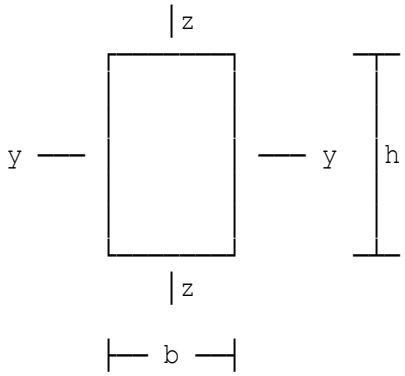

Rectangular timber section

With axial load and bending about y-y axis, in accordance with Eurocode 5 incorporating National Annex Amendment No.2.

Design BM about yy (positive)	Md=0.4953 kNm
Design shear force in z direction	Vd=0 kN
Design axial load (+ve compress)	Nd=-7.007 kN
Eff length for bending about yy	ley=2.346 m
Depth of section	h=97 mm
Width of section	b=97 mm
Eff length for bending about zz	lez=0 m
Timber strength class C24.	
Tensile area of cross section	At=7469 mm²
Depth factor (Clause 3.2)	kh=(150/h)^0.2=1.0911
Load-sharing modification factor	ksys=1.0
Width modification factor	kw=(150/lardim)^0.2=1.0911
Shear reduction factor	ksh=0.67

DESIGN SUMMARY

Depth of section	**97 mm**
Width of section	**97 mm**
Timber strength class C24.	
Tensile cross sec area	**7469 mm²**
Timber moisture class	**3**
Design tension stress	**0.93814 N/mm²**
Design tension strength	**10.953 N/mm²**
Design bending stress	**3.2561 N/mm²**
Design bending strength	**18.129 N/mm²**
Interaction factor	**0.26526 ≤ 1**

Location: Glulam section with axial load & bending

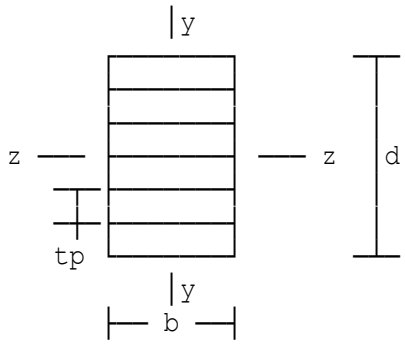

Rectangular glulam member subject to axial load and bending about axis zz with horizontal laminations.

Calculations in accordance with BS5268-2:2002.

Design BM about zz (+ve only)	Mz'=21.5 kNm
Design shear force in y direction	V'=25 kN
Design axial load (+ve compress)	F'=30.9 kN
Eff length for bending about zz	Lez'=4.5 m
Number of laminates in section	np=10
Thickness of laminates in section	tp=45 mm
Width of section	b=135 mm
Eff length for bending about yy	Ley'=0 m
Strength class C30 to Table 8.	
Timber service class adopted	tmclass=1
Timber service class modification	factor K2=1 as Table 16.
Duration of loading	K3=1.25
Depth factor	K7=0.81*(d^2+92300)/(d^2+56800) =0.92089

DESIGN SUMMARY

Laminate Thickness	**45 mm**
Number of laminates	**10**
Depth of section	**450 mm**
Width of section	**135 mm**

GRADE STRESSES

Bending	**11 N/mm²**
Compression // to grain	**8.6 N/mm²**
Shear	**1.2 N/mm²**
Modulus of elasticity	**12300 N/mm²**

Strength class C30 to Table 8.
Moisture service class 1
Dry stresses are appropriate

Applied comprn stress	**0.50864 N/mm²**
Permiss comprn stress	**9.3187 N/mm²**
Applied bending stress	**4.7188 N/mm²**
Permiss bending stress	**13.929 N/mm²**
Interaction factor	**0.39551**
Applied shear stress	**0.61728 N/mm²**
Permiss shear stress	**2.235 N/mm²**

Location: Glulam section with bending and no axial load

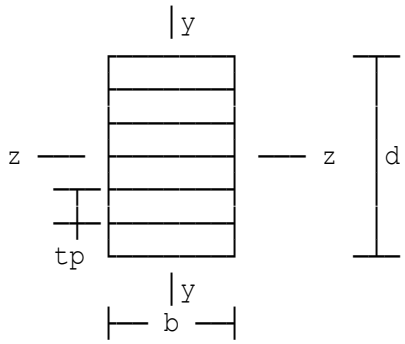

Rectangular glulam member subject to axial load and bending about axis zz with horizontal laminations.

Calculations in accordance with BS5268-2:2002.

Design BM about zz (+ve only)	Mz'=25 kNm
Design shear force in y direction	V'=20 kN
Design axial load (+ve compress)	F'=0 kN
Eff length for bending about zz	Lez'=6 m
Number of laminates in section	np=9
Thickness of laminates in section	tp=45 mm
Width of section	b=115 mm
Eff length for bending about yy	Ley'=1.5 m
Whitewood SS grade	
Bending parallel to the grain	bparg=7.5 N/mm²
Compress parallel to the grain	cparg=7.9 N/mm²
Compress perpendicular to the grain	cperd=2.1 N/mm²
Tension parallel to the grain	tparg=4.5 N/mm²
Shear parallel to the grain	sparg=0.82 N/mm²
Mean modulus of elasticity	Emean=10000 N/mm²
Minimum modulus of elasticity	Emin=7000 N/mm²
Timber service class adopted	tmclass=2
Timber service class modification	factor K2=1 as Table 16.
Duration of loading	K3=1.25
Depth factor	K7=0.81*(d^2+92300)/(d^2+56800) =0.94022
Modification factor	K15=1.42
Modification factor	K16=1.39
Modification factor	K17=1.04
Modification factor	K19=2.34
Modification factor	K20=1.07

DESIGN SUMMARY

Laminate Thickness	**45 mm**
Number of laminates	**9**
Depth of section	**405 mm**
Width of section	**115 mm**

GRADE STRESSES

Bending	**7.5 N/mm²**
Shear	**0.82 N/mm²**
Modulus of elasticity	**10000 N/mm²**
Whitewood SS grade	
Moisture service class	**2**
Dry stresses are appropriate	
Applied bending stress	**7.9521 N/mm²**
Permiss bending stress	**12.517 N/mm²**
Applied shear stress	**0.64412 N/mm²**
Permiss shear stress	**2.3985 N/mm²**

Location: Glulam section bending with axial load (Class 2 Hardwood)

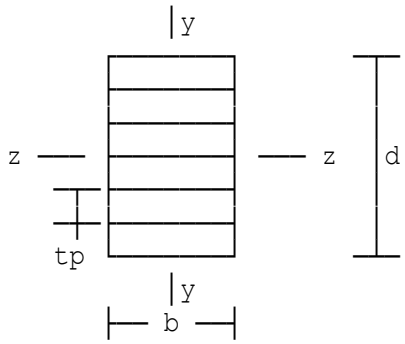

Rectangular glulam member subject to axial load and bending about axis zz with horizontal laminations.

Calculations in accordance with BS5268-2:2002.

Design BM about zz (+ve only)	Mz'=60 kNm
Design shear force in y direction	V'=42 kN
Design axial load (+ve compress)	F'=90 kN
Eff length for bending about zz	Lez'=6 m
Number of laminates in section	np=12
Thickness of laminates in section	tp=45 mm
Width of section	b=90 mm
Eff length for bending about yy	Ley'=1.5 m
Strength class D70 to Table 8.	
Timber service class adopted	tmclass=2
Timber service class modification	factor K2=1 as Table 16.
Duration of loading	K3=1.5
Depth factor	K7=0.81*(d^2+92300)/(d^2+56800) =0.89253

DESIGN SUMMARY

Laminate Thickness	**45 mm**
Number of laminates	**12**
Depth of section	**540 mm**
Width of section	**90 mm**

GRADE STRESSES

Bending	**23 N/mm²**
Compression // to grain	**23 N/mm²**
Shear	**2.6 N/mm²**
Modulus of elasticity	**21000 N/mm²**

Strength class D70 to Table 8.
Moisture service class 2
Dry stresses are appropriate

Applied comprn stress	**1.8519 N/mm²**
Permiss comprn stress	**22.409 N/mm²**
Applied bending stress	**13.717 N/mm²**
Permiss bending stress	**33.872 N/mm²**
Interaction factor	**0.49925**
Applied shear stress	**1.2963 N/mm²**
Permiss shear stress	**5.811 N/mm²**

Location: Glulam section bending with tensile axial load

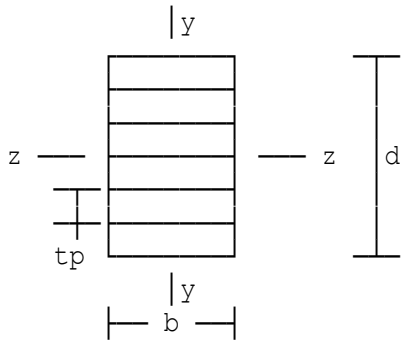

Rectangular glulam member subject to axial load and bending about axis zz with horizontal laminations.

Calculations in accordance with BS5268-2:2002.

Design BM about zz (+ve only)	Mz'=25 kNm
Design shear force in y direction	V'=25 kN
Design axial load (+ve compress)	F'=-60 kN
Eff length for bending about zz	Lez'=6 m
Number of laminates in section	np=10
Thickness of laminates in section	tp=45 mm
Width of section	b=90 mm
Eff length for bending about yy	Ley'=1.5 m
Strength class C27 to Table 8.	
Tensile area of section	At=40000 mm²
Timber service class adopted	tmclass=1
Timber service class modification	factor K2=1 as Table 16.
Duration of loading	K3=1.25
Depth factor	K7=0.81*(d^2+92300)/(d^2+56800) =0.92089
Width modification factor	K14=(300/h)^0.11=0.95638

DESIGN SUMMARY

Laminate Thickness	**45 mm**
Number of laminates	**10**
Depth of section	**450 mm**
Width of section	**90 mm**

GRADE STRESSES

Bending	**10 N/mm²**
Tension // to grain	**6 N/mm²**
Shear	**1.1 N/mm²**
Modulus of elasticity	**12300 N/mm²**

Strength class C27 to Table 8.
Moisture service class 1
Dry stresses are appropriate

Applied tension stress	**1.5 N/mm²**
Permiss tension stress	**7.8901 N/mm²**
Applied bending stress	**8.2305 N/mm²**
Permiss bending stress	**12.662 N/mm²**
Interaction factor	**0.84011**
Applied shear stress	**0.92593 N/mm²**
Permiss shear stress	**2.0488 N/mm²**

Location: Glulam section with axial load & bending

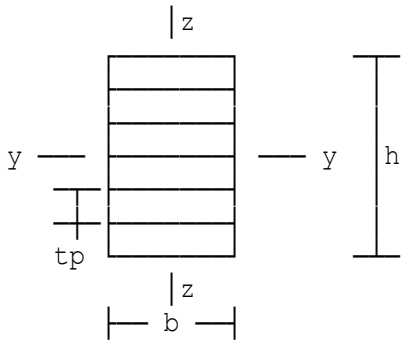

Rectangular glulam member

Glulam is subject to axial load and bending about yy axis with horizontal laminations.

Design is in accordance on with EC5 incorporating NA Amendment No.2.

Design BM about yy (+ve only)	Md'=31.175 kNm
Design shear force in z direction	Vd'=36.25 kN
Design axial load (+ve compress)	Nd'=44.805 kN
Eff length for bending about yy	ley'=4.5 m
Number of laminates in section	np=10
Thickness of laminates in section	tp=45 mm
Width of section	b=135 mm
Eff length for bending about zz	lez'=0 m
Glulam strength class GL32h	
Depth factor (Clause 3.3)	kh=(600/h)^0.1=1.0292
Instability factor	kcy=1/(ky+(ky^2-rsry^2)^0.5)=0.9614
Instability factor	kcz=1/(kz+(kz^2-rsrz^2)^0.5)=1.0309
Max instability factor	kcz=1
Shear reduction factor	ksh=0.67
Effective length about zz	Le=3.6 m
Interaction factor	fact1=sc0d/(kcy*fc0d)+smd/fmd=0.30173
Interaction factor	fact2=(smd/(kcrit*fmd))^2+sc0d/(kcz *fc0d)=0.10319
Governing interaction factor	factor=0.30173

DESIGN SUMMARY

Laminate thickness	**45 mm**
Number of laminates	**10**
Depth of section	**450 mm**
Width of section	**135 mm**

CHARACTERISTIC GRADE STRENGTHS

Bending	**32 N/mm²**
Compression // to grain	**32 N/mm²**
Shear	**3.5 N/mm²**
Modulus of elasticity	**14200 N/mm²**
Glulam strength class GL32h	
Moisture service class	**1**
Dry stresses are appropriate	
Design comprn stress	**0.73753 N/mm²**
Design comprn strength	**24.576 N/mm²**
Design bending strength	**6.8422 N/mm²**
Design bending strength	**25.293 N/mm²**
Interaction factor	**0.30173**
Design shear stress	**0.89061 N/mm²**
Design shear strength	**1.801 N/mm²**

Location: Glulam section with bending and no axial load

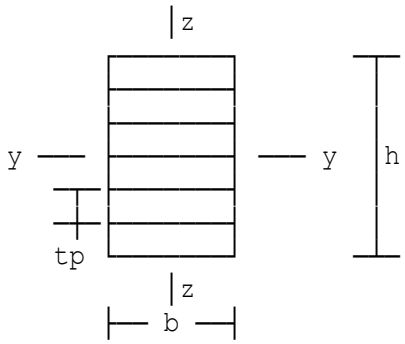

Rectangular glulam member

Glulam is subject to axial load and bending about yy axis with horizontal laminations.

Design is in accordance on with EC5 incorporating NA Amendment No.2.

Design BM about yy (+ve only)	Md'=49.7 kNm
Design shear force in z direction	Vd'=39.76 kN
Design axial load (+ve compress)	Nd'=0 kN
Eff length for bending about yy	ley'=6 m
Number of laminates in section	np=9
Thickness of laminates in section	tp=45 mm
Width of section	b=115 mm
Eff length for bending about zz	lez'=1.5 m

Whitewood SS grade	
Bending parallel to the grain	fmk=24 N/mm²
Compress parallel to the grain	fc0k=21 N/mm²
Compress perp to the grain	fc90k=2.5 N/mm²
Shear parallel to the grain	fvk=3.5 N/mm²
Mean modulus of elasticity	E0mean=11000 N/mm²
5th percentile MOE	E005=9100 N/mm²
Depth factor (Clause 3.3)	kh=(600/h)^0.1=1.0401
Shear reduction factor	ksh=0.67
Effective length about zz	Le=4.8 m

DESIGN SUMMARY

Laminate thickness	**45 mm**
Number of laminates	**9**
Depth of section	**405 mm**
Width of section	**115 mm**

CHARACTERISTIC GRADE STRENGTHS

Bending	**24 N/mm²**
Shear	**3.5 N/mm²**
Modulus of elasticity	**11000 N/mm²**
Whitewood SS grade	
Moisture service class	**2**
Dry stresses are appropriate	
Design bending strength	**15.809 N/mm²**
Design bending strength	**19.171 N/mm²**
Interaction factor	**0.82463**
Design shear stress	**1.2741 N/mm²**
Design shear strength	**1.801 N/mm²**

Location: Glulam section bending with axial load (Class 2 Hardwood)

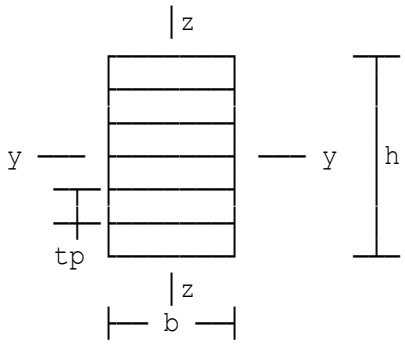

Rectangular glulam member

Glulam is subject to axial load and bending about yy axis with horizontal laminations.

Design is in accordance on with EC5 incorporating NA Amendment No.2.

Design BM about yy (+ve only)	Md'=85.2 kNm
Design shear force in z direction	Vd'=59.64 kN
Design axial load (+ve compress)	Nd'=127.8 kN
Eff length for bending about yy	ley'=6 m
Number of laminates in section	np=12
Thickness of laminates in section	tp=45 mm
Width of section	b=90 mm
Eff length for bending about zz	lez'=1.5 m
Glulam strength class GL32h	
Depth factor (Clause 3.3)	kh=(600/h)^0.1=1.0106
Instability factor	kcy=1/(ky+(ky^2-rsry^2)^0.5)=0.94783
Instability factor	kcz=1/(kz+(kz^2-rsrz^2)^0.5)=0.80174
Shear reduction factor	ksh=0.67
Interaction factor	fact1=sc0d/(kcy*fc0d)+smd/fmd=0.79749
Interaction factor	fact2=(smd/(kcrit*fmd))^2+sc0d/(kcz *fc0d)=0.60464
Governing interaction factor	factor=0.79749

DESIGN SUMMARY

Laminate thickness	**45 mm**
Number of laminates	**12**
Depth of section	**540 mm**
Width of section	**90 mm**

CHARACTERISTIC GRADE STRENGTHS

Bending	**32 N/mm²**
Compression // to grain	**32 N/mm²**
Shear	**3.5 N/mm²**
Modulus of elasticity	**14200 N/mm²**
Glulam strength class GL32h	
Moisture service class	**2**
Dry stresses are appropriate	
Design comprn stress	**2.6296 N/mm²**
Design comprn strength	**27.648 N/mm²**
Design bending strength	**19.479 N/mm²**
Design bending strength	**27.941 N/mm²**
Interaction factor	**0.79749**
Design shear stress	**1.8316 N/mm²**
Design shear strength	**2.0261 N/mm²**

Location: Glulam section bending with tensile axial load

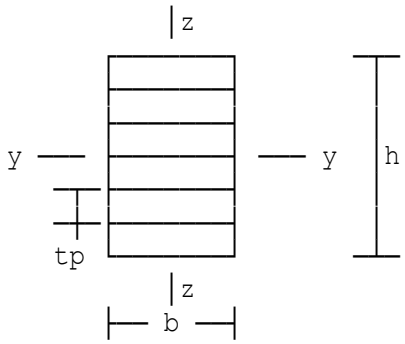

Rectangular glulam member

Glulam is subject to axial load and bending about yy axis with horizontal laminations.

Design is in accordance on with EC5 incorporating NA Amendment No.2.

Design BM about yy (+ve only)	Md'=35.5 kNm
Design shear force in z direction	Vd'=35.5 kN
Design axial load (+ve compress)	Nd'=-85.2 kN
Eff length for bending about yy	ley'=6 m
Number of laminates in section	np=10
Thickness of laminates in section	tp=45 mm
Width of section	b=90 mm
Eff length for bending about zz	lez'=1.5 m
Glulam strength class GL32h	
Tensile area of section	At=40000 mm²
Depth factor (Clause 3.3)	kh=(600/h)^0.1=1.0292
Width modification factor	kw=(600/lardim)^0.1=1.0292
Shear reduction factor	ksh=0.67
Interaction factor	fact1=std/ft0d+smd/fmd=0.56733
Interaction factor	fact2=(smd-std)/(kcrit*fmd)=0.37786
Factor governing design	factor=0.56733

DESIGN SUMMARY

Laminate thickness	**45 mm**
Number of laminates	**10**
Depth of section	**450 mm**
Width of section	**90 mm**

CHARACTERISTIC GRADE STRENGTHS

Bending	**32 N/mm²**
Tension // to grain	**25.6 N/mm²**
Shear	**3.5 N/mm²**
Modulus of elasticity	**14200 N/mm²**
Glulam strength class GL32h	
Moisture service class	**1**
Dry stresses are appropriate	
Design tensile stress	**2.13 N/mm²**
Design tensile strength	**20.235 N/mm²**
Design bending strength	**11.687 N/mm²**
Design bending strength	**25.293 N/mm²**
Interaction factor	**0.56733**
Design shear stress	**1.3083 N/mm²**
Design shear strength	**1.801 N/mm²**

Location: Domestic floor joist example

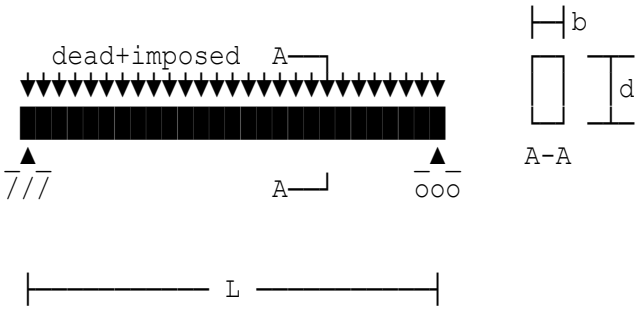

Domestic floor joist

These calculations follow the domestic floor joists example by V C Johnson in TRADA Design Aid DA1 and BS5268-2:2002.

The following assumptions are made in these calculations:

- that the timber has a moisture content of service class 1 or 2 (i.e. K2=1)
- the floor can adequately distribute any concentrated point load to at least two joists.
- the centres of joists do not exceed 610 mm
- that load sharing of the joists can occur & K8 = 1.1.

Effective span of joist	L=3.6 m
Centres of joists	crs=600 mm
Dead load including self weight	dead=0.34 kN/m²
Imposed udl load (on floor)	live=1.5 kN/m²
Imposed point load (on one joist)	PL=2 kN
Depth of section	d=200 mm
Width of section	b=50 mm
Bearing length	lb=100 mm
Strength class C18 to Table 8.	
Duration of loading	K3=1
Depth factor	K7=(300/d)^0.11=1.0456
Load sharing (Clause 2.9)	K8=1.1
From BS5268-2 Table 18, bearing is < 75 mm from joist end.	
Bearing Modification factor	K4=1.0

DESIGN SUMMARY

Joists: 200 mm x 50 mm @ 600 mm crs	
Strength class C18 to Table 8.	
Bending stress	**6.3914 N/mm²**
Permissible bending	**6.671 N/mm²**
Deflection	**8.3371 mm**
Limiting deflection	**10.8 mm**
Shear stress	**0.35508 N/mm²**
Permissible shear	**0.737 N/mm²**
Bearing stress	**0.47344 N/mm²**
Permissible bearing	**2.42 N/mm²**

Location: Example 2: TR26 grade stress

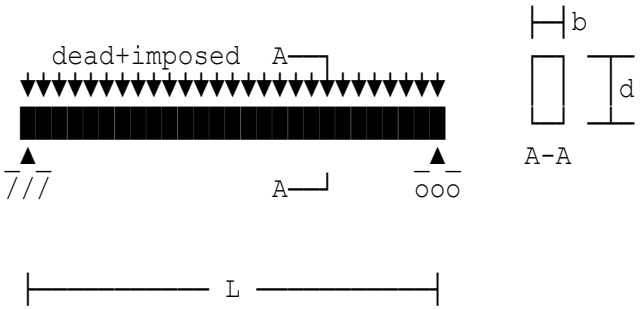

Domestic floor joist

These calculations follow the domestic floor joists example by V C Johnson in TRADA Design Aid DA1 and BS5268-2:2002.

The following assumptions are made in these calculations:

- that the timber has a moisture content of service class 1 or 2 (i.e. K2=1)
- the floor can adequately distribute any concentrated point load to at least two joists.
- the centres of joists do not exceed 610 mm
- that load sharing of the joists can occur & K8 = 1.1.

Effective span of joist	L=2.7 m
Centres of joists	crs=400 mm
Dead load including self weight	dead=0.21 kN/m²
Imposed udl load (on floor)	live=1.5 kN/m²
Imposed point load (on one joist)	PL=2 kN
Depth of section	d=193 mm
Width of section	b=38 mm
Bearing length	lb=75 mm
Strength class TR26 to Table 9.	
Duration of loading	K3=1
Depth factor	K7=(300/d)^0.11=1.0497
Load sharing (Clause 2.9)	K8=1.1
From BS5268-2 Table 18, bearing is > 75 mm from joist end.	
Bearing modification factor	K4=1.14

DESIGN SUMMARY

Joists: 193 mm x 38 mm @ 400 mm crs	
Strength class TR26 to Table 9.	
Bending stress	**6.047 N/mm²**
Permissible bending	**11.547 N/mm²**
Deflection	**3.5253 mm**
Limiting deflection	**8.1 mm**
Shear stress	**0.43225 N/mm²**
Permissible shear	**1.21 N/mm²**
Bearing stress	**0.74154 N/mm²**
Permissible bearing	**3.135 N/mm²**

Location: Example 3: D60 Hardwood grade stress

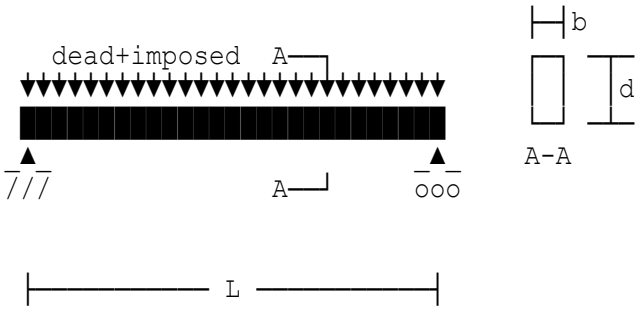

Domestic floor joist

These calculations follow the domestic floor joists example by V C Johnson in TRADA Design Aid DA1 and BS5268-2:2002.

The following assumptions are made in these calculations:

- that the timber has a moisture content of service class 1 or 2 (i.e. K2=1)
- the floor can adequately distribute any concentrated point load to at least two joists.
- the centres of joists do not exceed 610 mm
- that load sharing of the joists can occur & K8 = 1.1.

Effective span of joist	L=5.4 m
Centres of joists	crs=600 mm
Dead load including self weight	dead=0.44 kN/m²
Imposed udl load (on floor)	live=1.5 kN/m²
Imposed point load (on one joist)	PL=2 kN
Depth of section	d=247 mm
Width of section	b=47 mm
Bearing length	lb=100 mm
Strength class D60 to Table 8.	
Duration of loading	K3=1
Depth factor	K7=(300/d)^0.11=1.0216
Load sharing (Clause 2.9)	K8=1.1
From BS5268-2 Table 18, bearing is < 75 mm from joist end.	
Bearing Modification factor	K4=1.0

DESIGN SUMMARY

Joists: 247 mm x 47 mm @ 600 mm crs	
Strength class D60 to Table 8.	
Bending stress	**8.8779 N/mm²**
Permissible bending	**20.228 N/mm²**
Deflection	**12.182 mm**
Limiting deflection	**14 mm**
Shear stress	**0.40608 N/mm²**
Permissible shear	**2.64 N/mm²**
Bearing stress	**0.66868 N/mm²**
Permissible bearing	**5.72 N/mm²**

Location: Example 4: User defined grade stresses

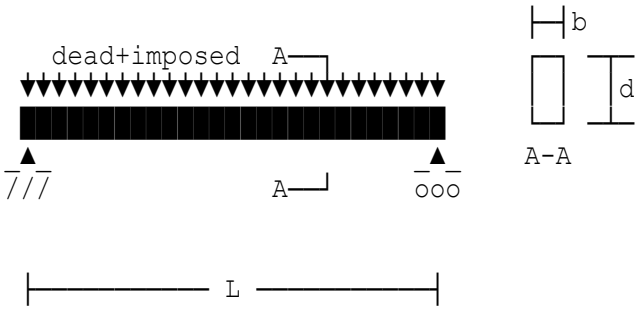

Domestic floor joist

These calculations follow the domestic floor joists example by V C Johnson in TRADA Design Aid DA1 and BS5268-2:2002.

The following assumptions are made in these calculations:

- that the timber has a moisture content of service class 1 or 2 (i.e. K2=1)
- the floor can adequately distribute any concentrated point load to at least two joists.
- the centres of joists do not exceed 610 mm
- that load sharing of the joists can occur & K8 = 1.1.

Effective span of joist	L=2.8 m
Centres of joists	crs=333 mm
Dead load including self weight	dead=0.15 kN/m²
Imposed udl load (on floor)	live=1.5 kN/m²
Imposed point load (on one joist)	PL=2 kN
Depth of section	d=125 mm
Width of section	b=75 mm
Bearing length	lb=150 mm
Douglas fir table 10	
Bending parallel to the grain	bparg=6.2 N/mm²
Compress parallel to the grain	cparg=6.6 N/mm²
Compress perpendicular to the grain	cperd=2.4 N/mm²
Tension parallel to the grain	tparg=3.7 N/mm²
Shear parallel to the grain	sparg=0.88 N/mm²
Mean modulus of elasticity	Emean=11000 N/mm²
Minimum modulus of elasticity	Emin=7000 N/mm²
Duration of loading	K3=1.25
Depth factor	K7=(300/d)^0.11=1.1011
Load sharing (Clause 2.9)	K8=1.1
Bearing modification factor	K4=1.0

DESIGN SUMMARY

Joists: 125 mm x 75 mm @ 333 mm crs	
Douglas fir table 10	
Bending stress	**7.4186 N/mm²**
Permissible bending	**9.3868 N/mm²**
Deflection	**7.1186 mm**
Limiting deflection	**8.4 mm**
Shear stress	**0.33119 N/mm²**
Permissible shear	**1.21 N/mm²**
Bearing stress	**0.18399 N/mm²**
Permissible bearing	**3.3 N/mm²**

Location: Domestic floor joist example

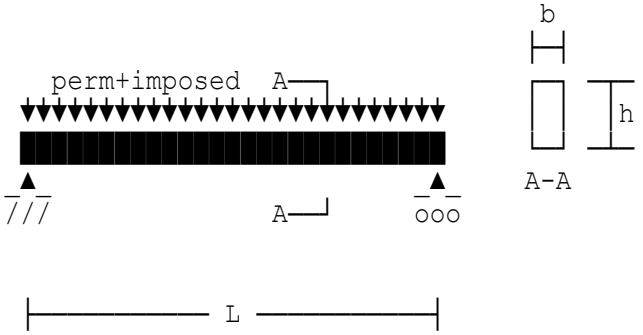

Domestic floor joist

Calculations are in accordance with EC5 incorporating National Annex Amendment No.2

The following assumptions are made in these calculations:

- that the timber has a moisture content of service class 1 or 2
- the floor can adequately distribute any concentrated point load to at least two joists
- the centres of joists do not exceed 600 mm
- that load sharing of the joists can occur.

Effective span of joist	L=3.6 m
Centres of joists	crs=600 mm
Permanent load including s.weight	Gk=0.34 kN/m²
Imposed udl load (on floor)	Qk=1.5 kN/m²
Imposed point load (on one joist)	PL=2 kN
Depth of section	h=200 mm
Width of section	b=50 mm
Bearing length	lb=100 mm
Timber strength class C18.	
Depth factor (Clause 3.2)	kh=1.0
Load sharing factor	ksys=1.1
Bearing modification factor	kc90=1.5
Notch factor for shear	kv=1.0
Shear reduction factor	ksh=0.67

DESIGN SUMMARY

Joists: 200 mm x 50 mm @ 600 mm crs	
Timber strength class C18.	
Bending stress	**9.4384 N/mm²**
Design bending strength	**12.185 N/mm²**
Combined total deflection	**10.601 mm**
Allowable deflection	**14.4 mm**
Shear stress	**0.52175 N/mm²**
Design shear strength	**1.542 N/mm²**
Bearing stress	**0.69914 N/mm²**
Design bearing strength	**2.2338 N/mm²**

Location: Domestic floor joist example

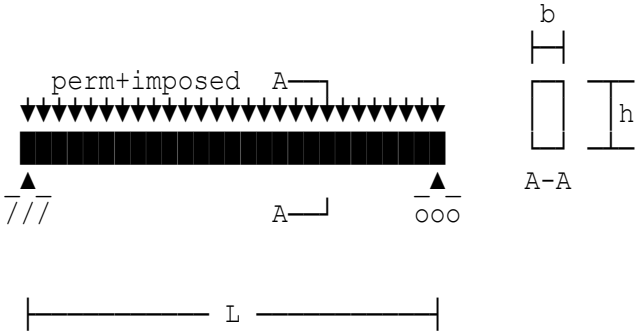

Domestic floor joist

Calculations are in accordance with EC5 incorporating National Annex Amendment No.2

The following assumptions are made in these calculations:

- that the timber has a moisture content of service class 1 or 2
- the floor can adequately distribute any concentrated point load to at least two joists
- the centres of joists do not exceed 600 mm
- that load sharing of the joists can occur.

Effective span of joist	L=3.8 m
Centres of joists	crs=600 mm
Permanent load including s.weight	Gk=0.3666 kN/m²
Imposed udl load (on floor)	Qk=1.5 kN/m²
Imposed point load (on one joist)	PL=1 kN
Depth of section	h=225 mm
Width of section	b=44 mm
Bearing length	lb=75 mm
Timber strength class C22.	
Depth factor (Clause 3.2)	kh=1.0
Load sharing factor	ksys=1.1
Bearing modification factor	kc90=1.5
Notch factor for shear	kv=1.0
Shear reduction factor	ksh=0.67

DESIGN SUMMARY

Joists: 225 mm x 44 mm @ 600 mm crs	
Timber strength class C22.	
Bending stress	**8.0074 N/mm²**
Design bending strength	**14.892 N/mm²**
Combined total deflection	**9.6864 mm**
Allowable deflection	**15.2 mm**
Shear stress	**0.47176 N/mm²**
Design shear strength	**1.7234 N/mm²**
Bearing stress	**0.94824 N/mm²**
Design bearing strength	**2.4369 N/mm²**

Location: Example 2: D60 Hardwood grade stress

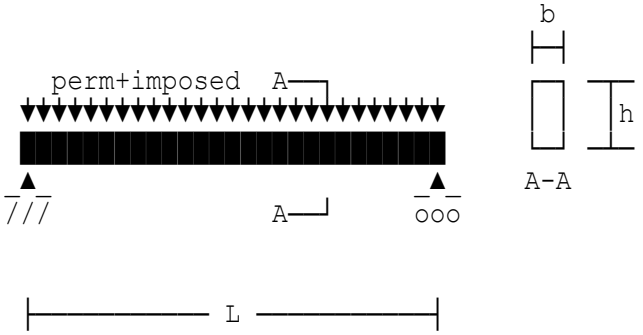

Domestic floor joist

Calculations are in accordance with EC5 incorporating National Annex Amendment No.2

The following assumptions are made in these calculations:

- that the timber has a moisture content of service class 1 or 2
- the floor can adequately distribute any concentrated point load to at least two joists
- the centres of joists do not exceed 600 mm
- that load sharing of the joists can occur.

Effective span of joist	L=5 m
Centres of joists	crs=600 mm
Permanent load including s.weight	Gk=0.44 kN/m²
Imposed udl load (on floor)	Qk=1.5 kN/m²
Imposed point load (on one joist)	PL=2 kN
Depth of section	h=247 mm
Width of section	b=47 mm
Bearing length	lb=100 mm
Timber strength class D70.	
Depth factor (Clause 3.2)	kh=1.0
Load sharing factor	ksys=1.1
Bearing modification factor	kc90=1.0
Notch factor for shear	kv=1.0
Shear reduction factor	ksh=0.67

DESIGN SUMMARY

Joists: 247 mm x 47 mm @ 600 mm crs	
Timber strength class D70.	
Bending stress	**11.158 N/mm²**
Design bending strength	**47.385 N/mm²**
Combined total deflection	**10.617 mm**
Allowable deflection	**20 mm**
Shear stress	**0.54847 N/mm²**
Design shear strength	**2.2677 N/mm²**
Bearing stress	**0.90766 N/mm²**
Design bearing strength	**8.1231 N/mm²**

Location: Example 3: User defined grade stresses

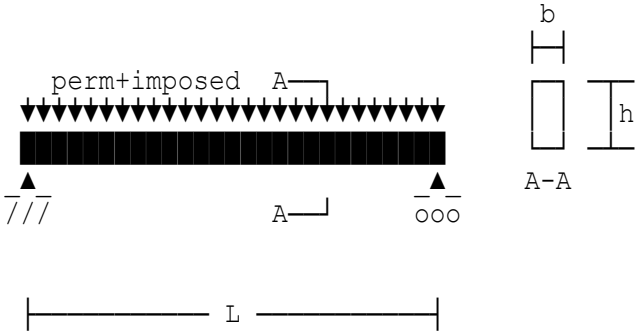

Domestic floor joist

Calculations are in accordance with EC5 incorporating National Annex Amendment No.2

The following assumptions are made in these calculations:
- that the timber has a moisture content of service class 1 or 2
- the floor can adequately distribute any concentrated point load to at least two joists
- the centres of joists do not exceed 600 mm
- that load sharing of the joists can occur.

Effective span of joist	L=2.8 m
Centres of joists	crs=333 mm
Permanent load including s.weight	Gk=0.15 kN/m²
Imposed udl load (on floor)	Qk=1.5 kN/m²
Imposed point load (on one joist)	PL=2 kN
Depth of section	h=125 mm
Width of section	b=75 mm
Bearing length	lb=150 mm

Softwood C24 strength class	
Bending parallel to the grain	fmk=24 N/mm²
Compress parallel to the grain	fc0k=21 N/mm²
Compress perp to the grain	fc90k=2.5 N/mm²
Tension parallel to the grain	ft0k=14 N/mm²
Shear parallel to the grain	fvk=2.5 N/mm²
Mean modulus of elasticity	E0mean=11000 N/mm²
5th percentile MOE	E005=7400 N/mm²
Depth factor (Clause 3.2)	kh=(150/h)^0.2=1.0371
Load sharing factor	ksys=1.1
Bearing modification factor	kc90=1.5
Notch factor for shear	kv=1.0
Shear reduction factor	ksh=0.67

DESIGN SUMMARY

Joists: 125 mm x 75 mm @ 333 mm crs	
Softwood C24 strength class	
Bending stress	**11.09 N/mm²**
Design bending strength	**16.849 N/mm²**
Combined total deflection	**8.8364 mm**
Allowable deflection	**11.2 mm**
Shear stress	**0.49264 N/mm²**
Design shear strength	**1.1338 N/mm²**
Bearing stress	**0.27506 N/mm²**
Design bearing strength	**2.5385 N/mm²**

Location: Biaxial bending of timber section

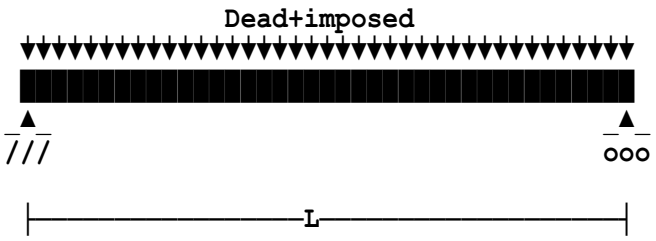

Timber beam subject to bi-axial bending to BS5268-2:2002

Beam span L=2.2 m
Depth of section d=172 mm
Width of section b=63 mm
Strength class C18 to Table 8.
Timber service class adopted tmclass=1
Timber service class modification factor K2=1 as Table 16.

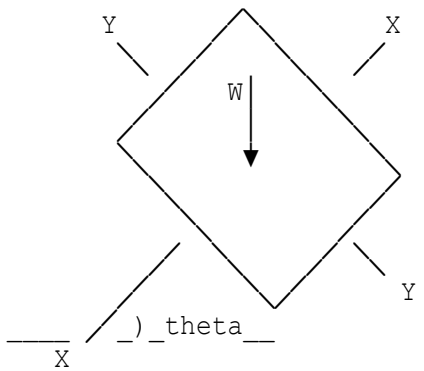

Theta is the angle between force W and axis Y-Y, and also as shown in the diagram. Load W is applied vertically and is to be resolved into components in each of the axes X-X and Y-Y.
Load W is applied in the vertical direction only.

Dead vertical load W Wvd=0.44 kN/m
Live vertical load W Wvl=0.44 kN/m
Angle of X-X axis to horizontal theta=30°
Axial load (+ve Compress) Fa'=0 kN
Duration of loading K3=1
Depth factor Kx7=(300/d)^0.11=1.0631
Depth factor Ky7=1.17
Load-sharing modification factor K8=1.0

Length of bearing lb=100 mm
From BS5268-2 Table 18, bearing is < 75 mm from joist end.
Bearing Modification factor K4=1.0

DESIGN SUMMARY

Member: 172 mm x 63 mm
Strength class C18 to Table 8.

Bending stress X-X	1.4843 N/mm²
Bending stress Y-Y	2.3396 N/mm²
Permiss bending X-X	6.166 N/mm²
Permiss bending Y-Y	6.786 N/mm²
Interaction factor	0.5855
Deflection	6.5158 mm
Limiting deflection	6.6 mm
Shear stress	0.13333 N/mm²
Permissible shear	0.67 N/mm²
Wx Bearing stress	0.13307 N/mm²
Wy Bearing stress	0.02814 N/mm²
Permissible bearing	2.2 N/mm²

Location: Example 2; Table 9 grade stresses; No axial force

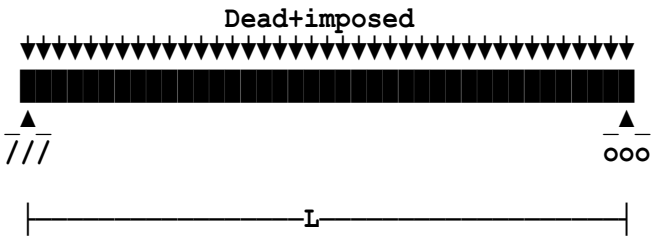

Timber beam subject to bi-axial bending to BS5268-2:2002

Beam span L=2.2 m
Depth of section d=172 mm
Width of section b=63 mm
Strength class C22 to Table 8.
Timber service class adopted tmclass=1
Timber service class modification factor K2=1 as Table 16.

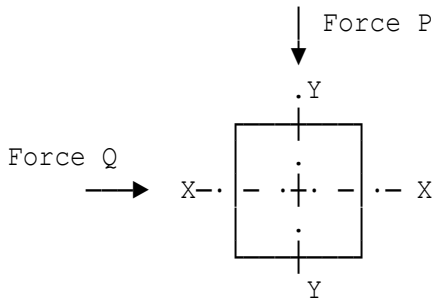

Force P acts along axis Y-Y causing local bending about X-X axis.

Force Q acts along axis X-X causing local bending about Y-Y axis.

Load applied along local axes of member.

Dead load in direction P Wxd=0.4 kN/m
Live load in direction P Wxl=0.4 kN/m
Dead load in direction Q Wyd=0.175 kN/m
Live load in direction Q Wyl=0.175 kN/m
Axial load (+ve Compress) Fa'=0 kN
Duration of loading K3=1
Depth factor Kx7=(300/d)^0.11=1.0631
Depth factor Ky7=1.17
Load-sharing modification factor K8=1.0

Length of bearing lb=100 mm
From BS5268-2 Table 18, bearing is < 75 mm from joist end.
Bearing Modification factor K4=1.0

DESIGN SUMMARY

Member: 172 mm x 63 mm
Strength class C22 to Table 8.

Bending stress X-X	1.5581 N/mm²
Bending stress Y-Y	1.8611 N/mm²
Permiss bending X-X	7.2291 N/mm²
Permiss bending Y-Y	7.956 N/mm²
Interaction factor	0.44946
Deflection	4.8883 mm
Limiting deflection	6.6 mm
Shear stress	0.1323 N/mm²
Permissible shear	0.71 N/mm²
Wx Bearing stress	0.13968 N/mm²
Wy Bearing stress	0.022384 N/mm²
Permissible bearing	2.3 N/mm²

Location: Example 3; Table 9 grade stresses; Comp axial force

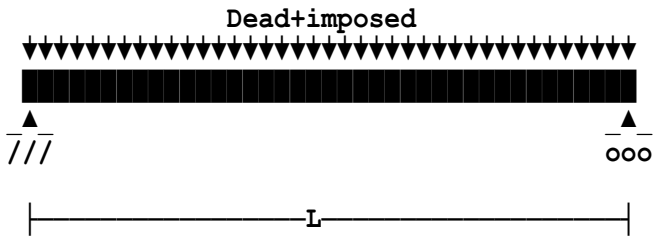

Timber beam subject to

bi-axial bending to

BS5268-2:2002

Beam span L=2.2 m
Depth of section d=172 mm
Width of section b=63 mm
Strength class C22 to Table 8.
Timber service class adopted tmclass=2
Timber service class modification factor K2=1 as Table 16.

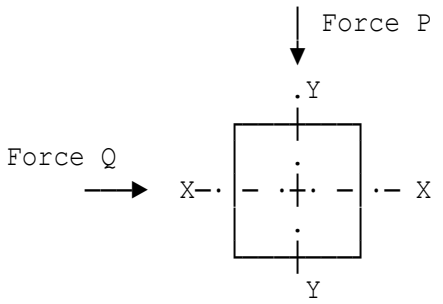

Force P acts along axis Y-Y causing local bending about X-X axis.

Force Q acts along axis X-X causing local bending about Y-Y axis.

Load applied along local axes of member.

Dead load in direction P Wxd=0.4 kN/m
Live load in direction P Wxl=0.4 kN/m
Dead load in direction Q Wyd=0.175 kN/m
Live load in direction Q Wyl=0.175 kN/m
Axial load (+ve Compress) Fa'=5 kN
Eff length for bending about x-x Lex=2200 mm
Eff length for bending about y-y Ley=0 mm
Duration of loading K3=1
Depth factor Kx7=(300/d)^0.11=1.0631
Depth factor Ky7=1.17
Load-sharing modification factor K8=1.0
Modification factor K12=(0.5+(1+eta)*C/2)-((0.5+(1+eta)*C/2)^2 -C)^0.5=0.7685

Length of bearing lb=100 mm
From BS5268-2 Table 18, bearing is > 75 mm from joist end.
Bearing modification factor K4=1.1

DESIGN SUMMARY

Member: 172 mm x 63 mm
Strength class C22 to Table 8.

Bending stress X-X	1.5581 N/mm²
Bending stress Y-Y	1.8611 N/mm²
Permiss bending X-X	7.2291 N/mm²
Permiss bending Y-Y	7.956 N/mm²
Applied Comp Stress	0.46142 N/mm²
Permiss Compression	5.7637 N/mm²
Interaction factor	0.53695
Deflection	4.8883 mm
Limiting deflection	6.6 mm
Shear stress	0.1323 N/mm²
Permissible shear	0.71 N/mm²
Wx Bearing stress	0.13968 N/mm²
Wy Bearing stress	0.022384 N/mm²
Permissible bearing	2.53 N/mm²

Location: Example 4; User defined grade stresses

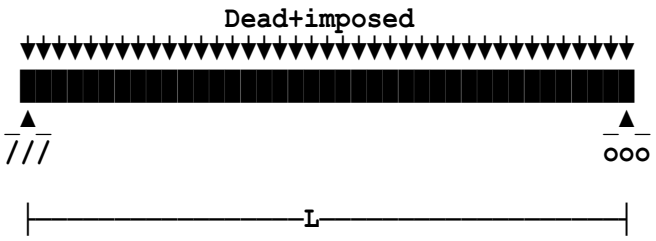

Timber beam subject to bi-axial bending to BS5268-2:2002

Beam span L=2.4 m
Depth of section d=193 mm
Width of section b=96 mm
Whitewood SS grade
Bending parallel to the grain bparg=6.8 N/mm²
Compress parallel to the grain cparg=7.5 N/mm²
Compress perpendicular to the grain cperd=2.3 N/mm²
Tension parallel to the grain tparg=3.7 N/mm²
Shear parallel to the grain sparg=0.88 N/mm²
Mean modulus of elasticity Emean=10000 N/mm²
Minimum modulus of elasticity Emin=7000 N/mm²
Timber service class adopted tmclass=1
Timber service class modification factor K2=1 as Table 16.

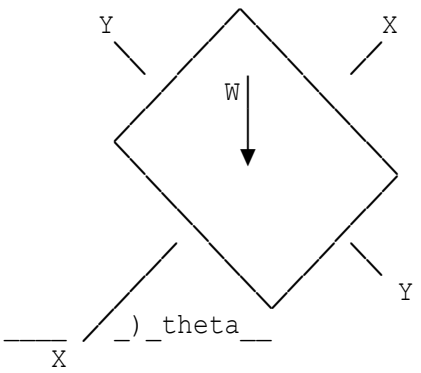

Theta is the angle between force W and axis Y-Y, and also as shown in the diagram. Load W is applied vertically and is to be resolved into components in each of the axes X-X and Y-Y.
Load W is applied in the vertical direction only.

Dead vertical load W Wvd=1.9 kN/m
Live vertical load W Wvl=1.9 kN/m
Angle of X-X axis to horizontal theta=10°
Axial load (+ve Compress) Fa'=0 kN
Duration of loading K3=1
Depth factor Kx7=(300/d)^0.11=1.0497
Depth factor Ky7=(300/b)^0.11=1.1335
Load-sharing modification factor K8=1.0

Length of bearing lb=100 mm
From BS5268-2 Table 18, bearing is < 75 mm from joist end.
Bearing Modification factor K4=1.0

DESIGN SUMMARY

Member: 193 mm x 96 mm	
Whitewood SS grade	
Bending stress X-X	**4.521 N/mm²**
Bending stress Y-Y	**1.6026 N/mm²**
Permiss bending X-X	**7.1381 N/mm²**
Permiss bending Y-Y	**7.708 N/mm²**
Interaction factor	**0.84128**
Deflection	**5.2996 mm**
Limiting deflection	**7.2 mm**
Shear stress	**0.36733 N/mm²**
Permissible shear	**0.88 N/mm²**
Wx Bearing stress	**0.46778 N/mm²**
Wy Bearing stress	**0.041028 N/mm²**
Permissible bearing	**2.3 N/mm²**

Location: Biaxial bending of timber section

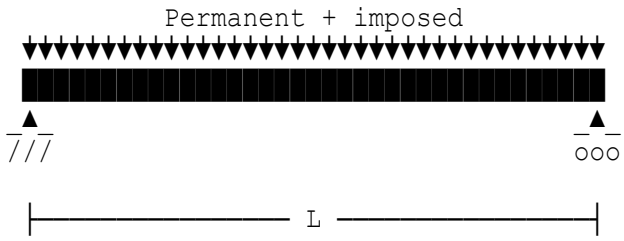

Timber beam subject to bi-axial bending to EC5 incorporating National Annex Amendment No.2

Beam span	L=2.2 m
Depth of section	h=172 mm
Width of section	b=63 mm
Bearing length	lb=100 mm

Timber strength class C18.

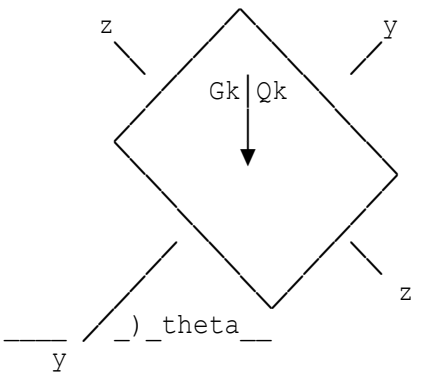

Loads Gk and Qk are to be resolved into yy and zz components.

Permanent load	Gk=0.44 kN/m
Variable load	Qk=0.44 kN/m
Angle of yy axis to horizontal	theta=30°
Permanent axial load (+ve Comp)	Nper=0 kN
Variable axial load (+ve Comp)	Nvar=0 kN
Bearing modification factor	kc90=1.5
Depth factor (Clause 3.3)	kyh=1.0
Depth factor (Clause 3.2)	kzh=(150/b)^0.2=1.1895
Load-sharing modification factor	ksys=1.0
Shear reduction factor	ksh=0.67
Effective length about zz	Le=1.76 m

DESIGN SUMMARY

Member: 172 mm x 63 mm	
Timber strength class C18.	
Bending stress yy	**2.1151 N/mm²**
Bending stress zz	**3.334 N/mm²**
Design bending strength yy	**8.3077 N/mm²**
Design bending strength zz	**9.8817 N/mm²**
Interaction factor	**0.51561**
Deflection	**6.038 mm**
Limiting deflection	**8.8 mm**
Shear stress	**0.19 N/mm²**
Design shear strength	**1.0514 N/mm²**
Fyd Bearing stress	**0.18962 N/mm²**
Fzd Bearing stress	**0.040099 N/mm²**
Design bearing strength	**3.3 N/mm²**

Location: Biaxial bending of timber section

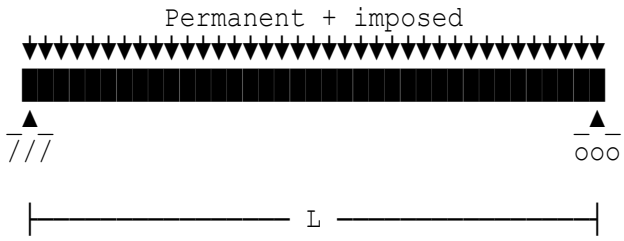

Timber beam subject to bi-axial bending to EC5 incorporating National Annex Amendment No.2

Beam span	L=2.2 m
Depth of section	h=172 mm
Width of section	b=63 mm
Bearing length	lb=50 mm

Timber strength class C18.

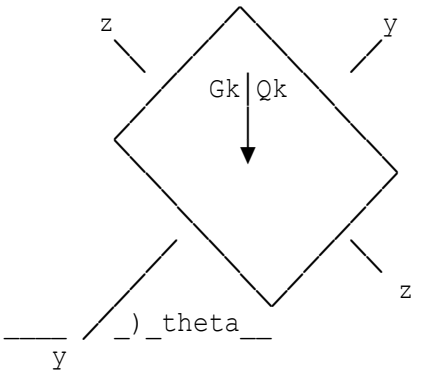

Loads Gk and Qk are to be resolved into yy and zz components.

Permanent load	Gk=0.44 kN/m
Variable load	Qk=0.44 kN/m
Angle of yy axis to horizontal	theta=30°
Permanent axial load (+ve Comp)	Nper=0 kN
Variable axial load (+ve Comp)	Nvar=0 kN
Bearing modification factor	kc90=1.5
Depth factor (Clause 3.3)	kyh=1.0
Depth factor (Clause 3.2)	kzh=(150/b)^0.2=1.1895
Load-sharing modification factor	ksys=1.0
Shear reduction factor	ksh=0.67
Effective length about zz	Le=1.76 m

DESIGN SUMMARY

Member: 172 mm x 63 mm	
Timber strength class C18.	
Bending stress yy	**2.1151 N/mm²**
Bending stress zz	**3.334 N/mm²**
Design bending strength yy	**8.3077 N/mm²**
Design bending strength zz	**9.8817 N/mm²**
Interaction factor	**0.51561**
Deflection	**6.038 mm**
Limiting deflection	**8.8 mm**
Shear stress	**0.19 N/mm²**
Design shear strength	**1.0514 N/mm²**
Fyd Bearing stress	**0.37924 N/mm²**
Fzd Bearing stress	**0.080198 N/mm²**
Design bearing strength	**3.3 N/mm²**

Location: Example 2 - No axial force

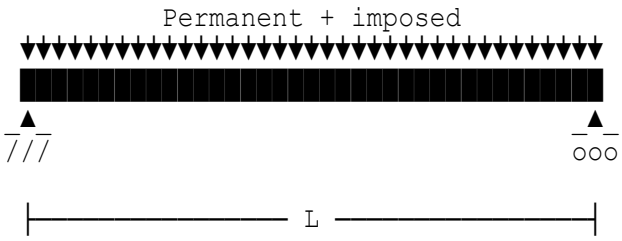

Timber beam subject to bi-axial bending to EC5 incorporating National Annex Amendment No.2

Beam span	L=2.2 m
Depth of section	h=172 mm
Width of section	b=63 mm
Bearing length	lb=50 mm

Timber strength class C22.

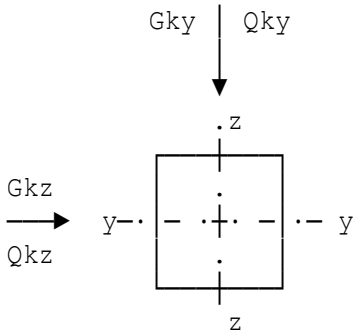

Loads Gky and Qky act along axis zz causing local bending about about yy axis.

Loads Gkz and Qkz act along axis yy causing local bending about zz axis.

Loads are applied along local axes of member.

Permanent load in direction zz	Gky=0.4 kN/m
Variable load in direction zz	Qky=0.4 kN/m
Permanent load in direction yy	Gkz=0.175 kN/m
Variable load in direction yy	Qkz=0.175 kN/m
Permanent axial load (+ve Comp)	Nper=0 kN
Variable axial load (+ve Comp)	Nvar=0 kN
Bearing modification factor	kc90=1.5
Depth factor (Clause 3.3)	kyh=1.0
Depth factor (Clause 3.2)	kzh=(150/b)^0.2=1.1895
Load-sharing modification factor	ksys=1.0
Shear reduction factor	ksh=0.67
Effective length about zz	Le=1.76 m

DESIGN SUMMARY

Member: 172 mm x 63 mm	
Timber strength class C22.	
Bending stress yy	**2.2203 N/mm²**
Bending stress zz	**2.652 N/mm²**
Design bending strength yy	**10.154 N/mm²**
Design bending strength zz	**12.078 N/mm²**
Interaction factor	**0.37265**
Deflection	**4.4166 mm**
Limiting deflection	**8.8 mm**
Shear stress	**0.18853 N/mm²**
Design shear strength	**1.1751 N/mm²**
Fyd Bearing stress	**0.3981 N/mm²**
Fzd Bearing stress	**0.063794 N/mm²**
Design bearing strength	**3.6 N/mm²**

Location: Example 3 - Compression axial force

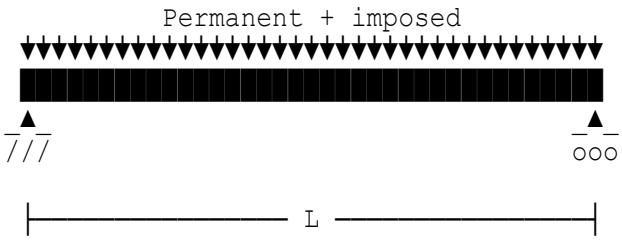

Timber beam subject to bi-axial bending to EC5 incorporating National Annex Amendment No.2

Beam span	L=2.2 m
Depth of section	h=172 mm
Width of section	b=63 mm
Bearing length	lb=50 mm
Timber strength class C22.	

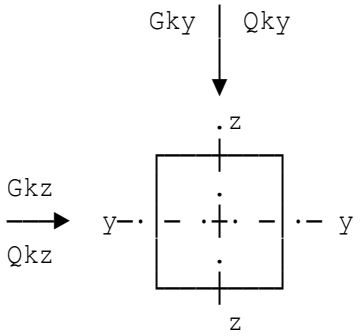

Loads Gky and Qky act along axis zz causing local bending about about yy axis.

Loads Gkz and Qkz act along axis yy causing local bending about zz axis.

Loads are applied along local axes of member.

Permanent load in direction zz	Gky=0.4 kN/m
Variable load in direction zz	Qky=0.4 kN/m
Permanent load in direction yy	Gkz=0.175 kN/m
Variable load in direction yy	Qkz=0.175 kN/m
Permanent axial load (+ve Comp)	Nper=20 kN
Variable axial load (+ve Comp)	Nvar=15 kN
Eff length for bending about yy	ley=2200 mm
Eff length for bending about zz	lez=0 mm
Bearing modification factor	kc90=1.5
Depth factor (Clause 3.3)	kyh=1.0
Depth factor (Clause 3.2)	kzh=(150/b)^0.2=1.1895
Load-sharing modification factor	ksys=1.0
Instability factor	kcy=1/(ky+(ky^2-rsry^2)^0.5)=0.84165
Instability factor	kcz=1/(kz+(kz^2-rsrz^2)^0.5)=1.0638
Max instability factor	kcz=1
Shear reduction factor	ksh=0.67

Effective length about zz Le=1.76 m

	Member: 172 mm x 63 mm	
	Timber strength class C22.	
	Bending stress yy	**2.2203 N/mm²**
	Bending stress zz	**2.652 N/mm²**
	Design bending strength yy	**10.154 N/mm²**
	Design bending strength zz	**12.078 N/mm²**
	Applied compression Stress	**4.5681 N/mm²**
	Design compressive strength	**9.2308 N/mm²**
	Interaction factor	**0.96036**
	Deflection	**4.8297 mm**
DESIGN	**Limiting deflection**	**8.8 mm**
SUMMARY	**Shear stress**	**0.18853 N/mm²**
	Design shear strength	**1.1751 N/mm²**
	Fyd Bearing stress	**0.3981 N/mm²**
	Fzd Bearing stress	**0.063794 N/mm²**
	Design bearing strength	**3.6 N/mm²**

Location: Example 4 - User defined grade stresses

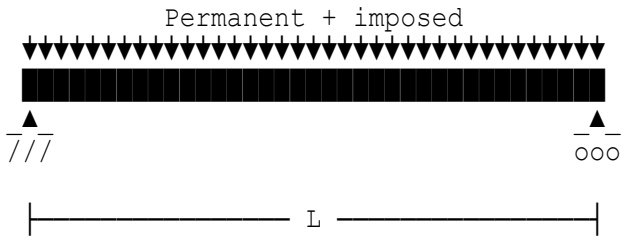

Timber beam subject to bi-axial bending to EC5 incorporating National Annex Amendment No.2

Beam span	L=2.4 m
Depth of section	h=193 mm
Width of section	b=96 mm
Bearing length	lb=50 mm

Whitewood

Bending parallel to the grain	fmk=18 N/mm²
Compress parallel to the grain	fc0k=18 N/mm²
Compress perp to the grain	fc90k=2.2 N/mm²
Tension parallel to the grain	ft0k=7.2 N/mm²
Shear parallel to the grain	fvk=3 N/mm²
Mean modulus of elasticity	E0mean=9000 N/mm²
5th percentile MOE	E005=6000 N/mm²

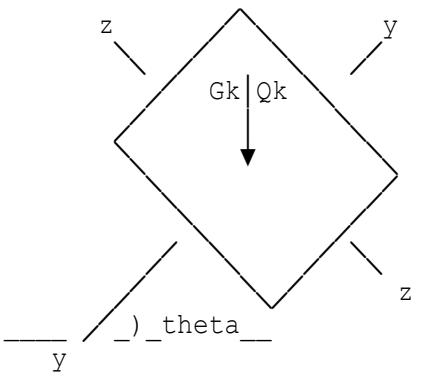

Loads Gk and Qk are to be resolved into yy and zz components.

Permanent load	Gk=1.9 kN/m
Variable load	Qk=1.9 kN/m
Angle of yy axis to horizontal	theta=10°
Permanent axial load (+ve Comp)	Nper=0 kN
Variable axial load (+ve Comp)	Nvar=0 kN
Bearing modification factor	kc90=1.5
Depth factor (Clause 3.3)	kyh=1.0
Depth factor (Clause 3.2)	kzh=(150/b)^0.2=1.0934
Load-sharing modification factor	ksys=1.0
Shear reduction factor	ksh=0.67

Effective length about zz Le=1.92 m

	Member: 193 mm x 96 mm	
	Whitewood	
	Bending stress yy	**6.4424 N/mm²**
	Bending stress zz	**2.2838 N/mm²**
	Design bending strength yy	**8.3077 N/mm²**
	Design bending strength zz	**9.0833 N/mm²**
	Interaction factor	**0.95147**
	Deflection	**5.7295 mm**
DESIGN	**Limiting deflection**	**9.6 mm**
SUMMARY	**Shear stress**	**0.52345 N/mm²**
	Design shear strength	**0.92769 N/mm²**
	Fyd Bearing stress	**1.3332 N/mm²**
	Fzd Bearing stress	**0.11693 N/mm²**
	Design bearing strength	**3.3 N/mm²**

Location: Example 5 - Compression axial force

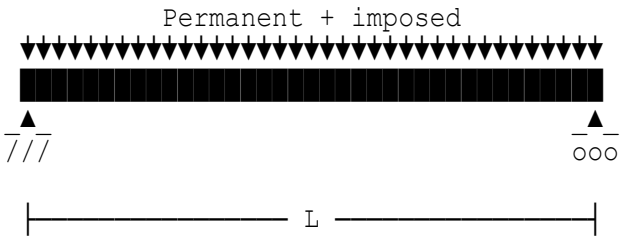

Timber beam subject to bi-axial bending to EC5 incorporating National Annex Amendment No.2

Beam span	L=3.75 m
Depth of section	h=250 mm
Width of section	b=100 mm
Bearing length	lb=50 mm

Timber strength class C22.

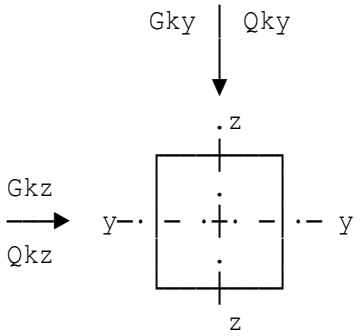

Loads Gky and Qky act along axis zz causing local bending about about yy axis.

Loads Gkz and Qkz act along axis yy causing local bending about zz axis.

Loads are applied along local axes of member.

Permanent load in direction zz	Gky=0.5 kN/m
Variable load in direction zz	Qky=0.25 kN/m
Permanent load in direction yy	Gkz=0 kN/m
Variable load in direction yy	Qkz=0 kN/m
Permanent axial load (+ve Comp)	Nper=17 kN
Variable axial load (+ve Comp)	Nvar=15 kN
Eff length for bending about yy	ley=3750 mm
Eff length for bending about zz	lez=3750 mm
Bearing modification factor	kc90=1.5
Depth factor (Clause 3.3)	kyh=1.0
Depth factor (Clause 3.2)	kzh=(150/b)^0.2=1.0845
Load-sharing modification factor	ksys=1.0
Instability factor	kcy=1/(ky+(ky^2-rsry^2)^0.5)=0.75898
Instability factor	kcz=1/(kz+(kz^2-rsrz^2)^0.5)=0.17917
Shear reduction factor	ksh=0.67
Effective length about zz	Le=3 m

DESIGN SUMMARY

Member: 250 mm x 100 mm	
Timber strength class C22.	
Bending stress yy	**1.7719 N/mm²**
Bending stress zz	**0 N/mm²**
Design bending strength yy	**13.538 N/mm²**
Design bending strength zz	**14.682 N/mm²**
Applied compression Stress	**1.818 N/mm²**
Design compressive strength	**12.308 N/mm²**
Interaction factor	**0.91603**
Deflection	**2.5562 mm**
Limiting deflection	**15 mm**
Shear stress	**0.11754 N/mm²**
Design shear strength	**1.5668 N/mm²**
Fyd Bearing stress	**0.39375 N/mm²**
Fzd Bearing stress	**0 N/mm²**
Design bearing strength	**3.6 N/mm²**

Location: Timber beam with udl & point loads

Timber beam to BS5268-2:2002

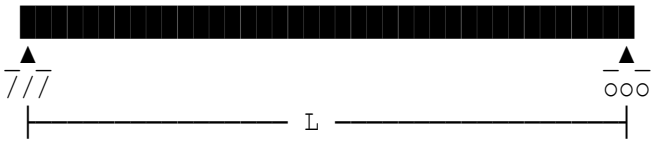

Simply supported beam subjected to vertical loads.

Beam span	L=3.6 m
Dist. from left support to start	Lau(1)=0 m
Distance from left support to end	Lbu(1)=3.6 m
Dead load (unfactored)	Gku(1)=0.204 kN/m
Imposed load (unfactored)	Qku(1)=0.9 kN/m
Maximum span bending moment	1.7885 kNm
Design shear force	Fve'=1.9872

Section design parameters

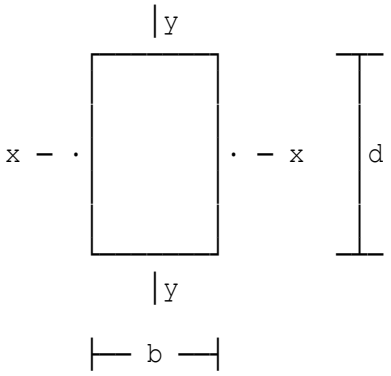

Design axial load (+ve comp)	Fa=3 kN
Depth of section	d=225 mm
Width of section	b=50 mm
Eff length for bending about xx	Lex=3600 mm
Eff length for bending about yy	Ley=0 mm
Length of bearing	lb=100 mm

From BS5268-2 Table 18, bearing is > 75 mm from joist end.

Bearing modification factor	K4=1.1

Strength class C18 to Table 8.

Timber service class adopted	tmclass=1

Timber service class modification factor K2=1 as Table 16.

Duration of loading	K3=1
Depth factor	K7=(300/d)^0.11=1.0322
Load-sharing modification factor	K8=1.1

Modification factor K12=(0.5+(1+eta)*C/2)-((0.5+(1+eta)*C/2)^2 -C)^0.5=0.69057

Depth of notch at support	notch=20 mm
Extent of notch	al=100 mm
	K5=(d*(he-al)+(al*he))/he/he=1.05

DESIGN SUMMARY

Member: 225 mm x 50 mm	
Strength class C18 to Table 8.	
Moisture service class 1	
Bending stress	**4.2394 N/mm²**
Permissible bending	**6.5851 N/mm²**
Comp Stress @ Mids.	**0.26667 N/mm²**
Permiss compression	**5.3933 N/mm²**
Interaction factor	**0.70258**
Comp Stress @ Supp.	**0.29268 N/mm²**
Deflection	**5.9258 mm**
Limiting deflection	**10.8 mm**
Shear stress	**0.29081 N/mm²**
Permissible shear	**0.77383 N/mm²**
Bearing stress	**0.39744 N/mm²**
Permissible bearing	**2.662 N/mm²**

Location: Example 2; No axial load

Timber beam to BS5268-2:2002

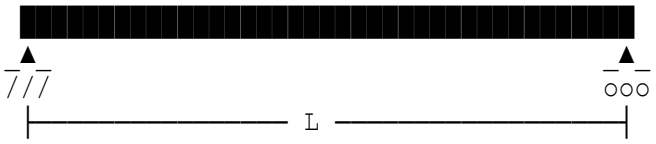

Simply supported beam subjected to vertical loads.

Beam span	L=3.6 m
Dist. from left support to start	Lau(1)=0 m
Distance from left support to end	Lbu(1)=3.6 m
Dead load (unfactored)	Gku(1)=0.204 kN/m
Imposed load (unfactored)	Qku(1)=1.5 kN/m
Maximum span bending moment	2.7605 kNm
Design shear force	Fve'=3.0672

Section design parameters

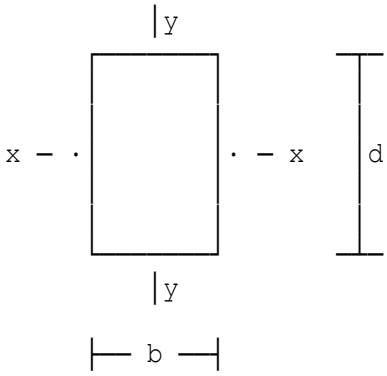

Design axial load (+ve comp)	Fa=0 kN
Depth of section	d=225 mm
Width of section	b=47 mm
Eff length for bending about xx	Lex=3600 mm
Eff length for bending about yy	Ley=0 mm
Length of bearing	lb=147 mm

From BS5268-2 Table 18, bearing is < 75 mm from joist end.

Bearing Modification factor	K4=1.0

Strength class TR26 to Table 9.

Timber service class adopted	tmclass=1

Timber service class modification factor K2=1 as Table 16.

Duration of loading	K3=1.5
Depth factor	K7=(300/d)^0.11=1.0322
Load-sharing modification factor	K8=1.1
No notches exist at the support	K5=1.0

DESIGN SUMMARY

Member: 225 mm x 47 mm	
Strength class TR26 to Table 9.	
Moisture service class 1	
Bending stress	**6.961 N/mm²**
Permissible bending	**17.03 N/mm²**
Deflection	**8.0495 mm**
Limiting deflection	**10.8 mm**
Shear stress	**0.43506 N/mm²**
Permissible shear	**1.815 N/mm²**
Bearing stress	**0.44394 N/mm²**
Permissible bearing	**4.125 N/mm²**

Location: Example 3; Bending and tensile axial load

Timber beam to BS5268-2:2002

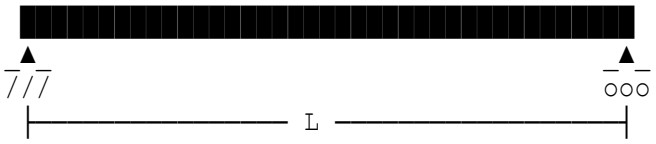

Simply supported beam subjected to vertical loads.

Beam span	L=4.5 m
Dist. from left support to start	Lau(1)=0 m
Distance from left support to end	Lbu(1)=4.5 m
Dead load (unfactored)	Gku(1)=0.15 kN/m
Imposed load (unfactored)	Qku(1)=1.75 kN/m
Maximum span bending moment	4.8094 kNm
Design shear force	Fve'=4.275

Section design parameters

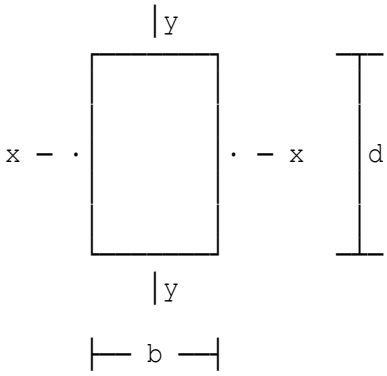

Design axial load (+ve comp)	Fa=-3 kN
Depth of section	d=272 mm
Width of section	b=63 mm
Eff length for bending about xx	Lex=4.5 mm
Eff length for bending about yy	Ley=0 mm
Length of bearing	lb=100 mm

From BS5268-2 Table 18, bearing is > 75 mm from joist end.

Bearing modification factor	K4=1.1

Strength class C24 to Table 8.

Timber service class adopted	tmclass=1

Timber service class modification factor K2=1 as Table 16.

Tensile area of cross section	At=10000 mm²
Duration of loading	K3=1.5
Depth factor	K7=(300/d)^0.11=1.0108
Load-sharing modification factor	K8=1.1 clause 2.10.11
No notches exist at the support	K5=1.0

Width modification factor K14=(300/h)^0.11=1.0108

	Member: 272 mm x 63 mm	
	Strength class C24 to Table 8.	
	Moisture service class 1	
	Bending stress	**6.191 N/mm²**
	Permissible bending	**12.509 N/mm²**
	Tension stress	**0.3 N/mm²**
	Permiss tension	**6.8231 N/mm²**
	Interaction factor	**0.53889**
DESIGN	**Deflection**	**12.355 mm**
SUMMARY	**Limiting deflection**	**13.5 mm**
	Shear stress	**0.37421 N/mm²**
	Permissible shear	**1.1715 N/mm²**
	Bearing stress	**0.67857 N/mm²**
	Permissible bearing	**4.356 N/mm²**

Location: Example 4; with User defined grade stresses

Timber beam to BS5268-2:2002

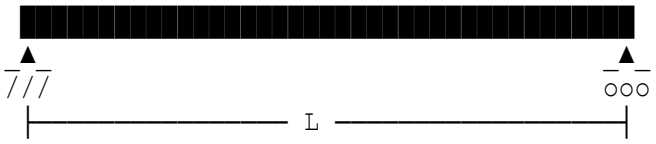

Simply supported beam subjected to vertical loads.

Beam span	L=3.6 m
Dist. from left support to start	Lau(1)=0 m
Distance from left support to end	Lbu(1)=3.6 m
Dead load (unfactored)	Gku(1)=0.204 kN/m
Imposed load (unfactored)	Qku(1)=0.9 kN/m
Maximum span bending moment	1.7885 kNm
Design shear force	Fve'=1.9872

Section design parameters

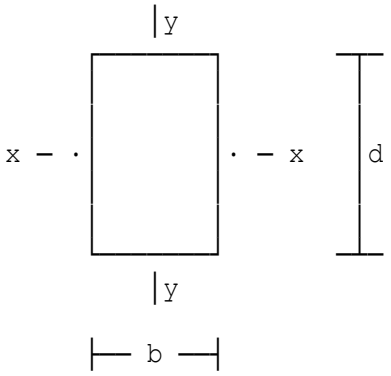

Design axial load (+ve comp)	Fa=3 kN
Depth of section	d=225 mm
Width of section	b=50 mm
Eff length for bending about xx	Lex=3600 mm
Eff length for bending about yy	Ley=0 mm
Length of bearing	lb=100 mm

From BS5268-2 Table 18, bearing is > 75 mm from joist end.

Bearing modification factor	K4=1.1

Redwood / Whitewood SS grade table 10

Bending parallel to the grain	bparg=7.5 N/mm²
Compress parallel to the grain	cparg=7.9 N/mm²
Compress perpendicular to the grain	cperd=2.1 N/mm²
Tension parallel to the grain	tparg=4.5 N/mm²
Shear parallel to the grain	sparg=0.82 N/mm²
Mean modulus of elasticity	Emean=10000 N/mm²
Minimum modulus of elasticity	Emin=7000 N/mm²
Timber service class adopted	tmclass=1

Timber service class modification factor K2=1 as Table 16.

```
Duration of loading              K3=1
Depth factor                     K7=(300/d)^0.11=1.0322
Load-sharing modification factor K8=1.1
Modification factor   K12=(0.5+(1+eta)*C/2)-((0.5+(1+eta)*C/2)^2
                          -C)^0.5=0.69566
Depth of notch at support        notch=20 mm
Extent of notch                  al=100 mm
                                 K5=(d*(he-al)+(al*he))/he/he=1.05
```

DESIGN SUMMARY

Member: 225 mm x 50 mm	
Redwood / Whitewood SS grade table 10	
Moisture service class 1	
Bending stress	**4.2394 N/mm²**
Permissible bending	**8.5152 N/mm²**
Comp Stress @ Mids.	**0.26667 N/mm²**
Permiss compression	**6.0453 N/mm²**
Interaction factor	**0.5482**
Comp Stress @ Supp.	**0.29268 N/mm²**
Deflection	**5.3925 mm**
Limiting deflection	**10.8 mm**
Shear stress	**0.29081 N/mm²**
Permissible shear	**0.94707 N/mm²**
Bearing stress	**0.39744 N/mm²**
Permissible bearing	**2.541 N/mm²**

Location: Timber beam with udl & point loads

Timber beam to EC5 - incorporating national amendment No.2

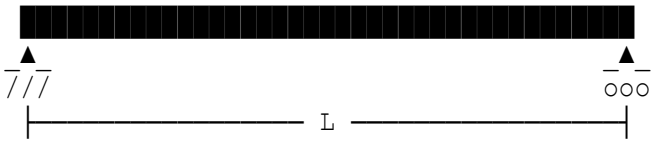

Simply supported beam subject to vertical loads.

Beam span	L=3.6 m
Dist. from left support to start	Lau(1)=0 m
Distance from left support to end	Lbu(1)=3.6 m
Permanent load (unfactored)	Gku(1)=0.21996 kN/m
Variable load 1 (unfactored)	Qua(1)=0.9 kN/m

Characteristic values of actions

Permanent:	
Reaction at left hand end	0.39593 kN
Reaction at right hand end	0.39593 kN
Maximum span moment	Mkp=0.35634 kNm
Maximum shear force	Fkp=0.39593 kN
Variable 1:	
Reaction at left hand end	1.62 kN
Reaction at right hand end	1.62 kN
Maximum span moment	Mkv1=1.458 kNm
Maximum shear force	Fkv1=1.62 kN
Design axial load (+ve compress)	Nd=0 kN

Section design parameters

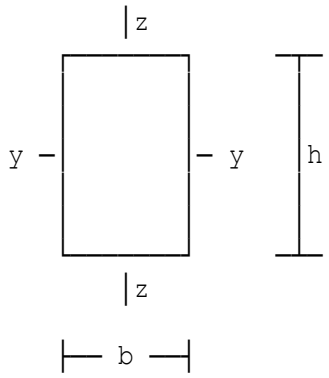

Depth of section	h=225 mm
Width of section	b=44 mm
Eff.length for bending about yy	ley=3800 mm
Eff.length for bending about zz	lez=0 mm
Length of bearing	lb=75 mm

Timber strength class C18.

Depth factor (Clause 3.2)	kh=1.0
Load-sharing modification factor	ksys=1.1
Depth of notch at support	notch=20 mm
Notch is on top edge of beam	kv=1
Bearing modification factor	kc90=1
Shear reduction factor	ksh=0.67
Effective length about zz	Le=2.88 m

	Member: 225 mm x 44 mm	
	Timber strength class C18.	
	Moisture service class	**1**
	Design bending stress	**7.1867 N/mm²**
	Design bending strength	**8.6394 N/mm²**
DESIGN	**Deflection**	**8.852 mm**
SUMMARY	**Limiting deflection**	**14.4 mm**
	Design shear stress	**0.49054 N/mm²**
	Design shear strength	**1.542 N/mm²**
	Design bearing stress	**0.89834 N/mm²**
	Design bearing strength	**1.4892 N/mm²**

Location: Example 2; No axial load

Timber beam to EC5 - incorporating national amendment No.2

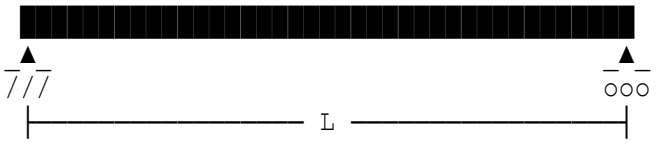

Simply supported beam subject to vertical loads.

Beam span	L=3.6 m
Dist. from left support to start	Lau(1)=0 m
Distance from left support to end	Lbu(1)=3.6 m
Permanent load (unfactored)	Gku(1)=0.204 kN/m
Variable load 1 (unfactored)	Qua(1)=1.5 kN/m

Characteristic values of actions

Permanent:	
Reaction at left hand end	0.3672 kN
Reaction at right hand end	0.3672 kN
Maximum span moment	Mkp=0.33048 kNm
Maximum shear force	Fkp=0.3672 kN
Variable 1:	
Reaction at left hand end	2.7 kN
Reaction at right hand end	2.7 kN
Maximum span moment	Mkv1=2.43 kNm
Maximum shear force	Fkv1=2.7 kN
Design axial load (+ve compress)	Nd=0 kN

Section design parameters

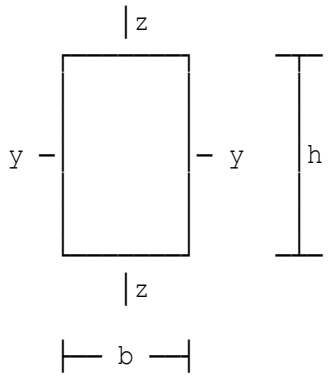

Depth of section	h=225 mm
Width of section	b=47 mm
Eff.length for bending about yy	ley=3600 mm
Eff.length for bending about zz	lez=0 mm
Length of bearing	lb=147 mm

Timber strength class D70.

Depth factor (Clause 3.2)	kh=1.0
Load-sharing modification factor	ksys=1.0
No notches exist at the support	kv=1.0
Bearing modification factor	kc90=1.0
Shear reduction factor	ksh=0.67
Effective length about zz	Le=2.88 m

	Member: 225 mm x 47 mm	
	Timber strength class D70.	
	Moisture service class	**1**
	Design bending stress	**10.317 N/mm²**
	Design bending strength	**25.449 N/mm²**
DESIGN	**Deflection**	**5.5394 mm**
SUMMARY	**Limiting deflection**	**14.4 mm**
	Design shear stress	**0.64158 N/mm²**
	Design shear strength	**2.0615 N/mm²**
	Design bearing stress	**0.65794 N/mm²**
	Design bearing strength	**7.3846 N/mm²**

Location: Example 3; Bending and tensile axial load

Timber beam to EC5 - incorporating national amendment No.2

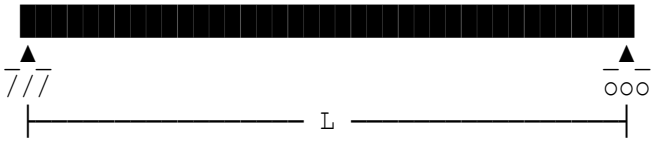

Simply supported beam subject to vertical loads.

Beam span	L=4.5 m
Dist. from left support to start	Lau(1)=0 m
Distance from left support to end	Lbu(1)=4.5 m
Permanent load (unfactored)	Gku(1)=0.15 kN/m
Variable load 1 (unfactored)	Qua(1)=1.75 kN/m

Characteristic values of actions

Permanent:	
Reaction at left hand end	0.3375 kN
Reaction at right hand end	0.3375 kN
Maximum span moment	Mkp=0.37969 kNm
Maximum shear force	Fkp=0.3375 kN
Variable 1:	
Reaction at left hand end	3.9375 kN
Reaction at right hand end	3.9375 kN
Maximum span moment	Mkv1=4.4297 kNm
Maximum shear force	Fkv1=3.9375 kN
Design axial load (+ve compress)	Nd=-3 kN

Section design parameters

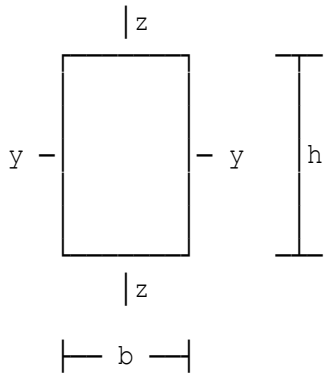

Depth of section	h=272 mm
Width of section	b=63 mm
Eff.length for bending about yy	ley=4.5 mm
Eff.length for bending about zz	lez=0 mm
Length of bearing	lb=100 mm

Timber strength class C24.

Tensile area of cross section	At=10000 mm²
Depth factor (Clause 3.2)	kh=1.0
Load-sharing modification factor	ksys=1.0
Width modification factor	kw=(150/lardim)^0.2=0.88778
Width modification factor	kw=1.0
No notches exist at the support	kv=1.0
Bearing modification factor	kc90=1
Shear reduction factor	ksh=0.67

DESIGN SUMMARY

Member: 272 mm x 63 mm	
Timber strength class C24.	
Moisture service class	**1**
Design bending stress	**9.2132 N/mm²**
Design bending strength	**16.615 N/mm²**
Design tension stress	**0.3 N/mm²**
Design tension strength	**10.038 N/mm²**
Interaction factor	**0.58438**
Deflection	**11.374 mm**
Limiting deflection	**18 mm**
Design shear stress	**0.55412 N/mm²**
Design shear strength	**1.8554 N/mm²**
Design bearing stress	**1.0098 N/mm²**
Design bearing strength	**1.7308 N/mm²**

Location: Example 4; with User defined grade stresses

Timber beam to EC5 - incorporating national amendment No.2

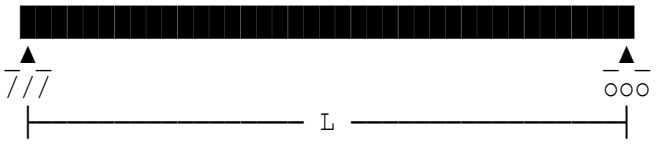

Simply supported beam subject to vertical loads.

Beam span	L=3.6 m
Dist. from left support to start	Lau(1)=0 m
Distance from left support to end	Lbu(1)=3.6 m
Permanent load (unfactored)	Gku(1)=0.204 kN/m
Variable load 1 (unfactored)	Qua(1)=0.45 kN/m
Variable load 2 (unfactored)	Qub(1)=0.45 kN/m

Characteristic values of actions

Permanent:	
Reaction at left hand end	0.3672 kN
Reaction at right hand end	0.3672 kN
Maximum span moment	Mkp=0.33048 kNm
Maximum shear force	Fkp=0.3672 kN
Variable 1:	
Reaction at left hand end	0.81 kN
Reaction at right hand end	0.81 kN
Maximum span moment	Mkv1=0.729 kNm
Maximum shear force	Fkv1=0.81 kN
Variable 2:	
Reaction at left hand end	0.81 kN
Reaction at right hand end	0.81 kN
Maximum span moment	Mkv2=0.729 kNm
Maximum shear force	Fkv2=0.81 kN
Design moment	Md1=gamG*Mkp+gamQ*Mkv2=1.5396 kNm
Design shear force	Vd1=gamG*Fkp+gamQ*Fkv2=1.7107 kN
Design moment	Md2=gamG*Mkp+gamQ*(Mkv2+psi0v1*Mkv1) =2.3051 kNm
Design shear force	Vd2=gamG*Fkp+gamQ*(Fkv2+psi0v1*Fkv1) =2.5612 kN

Design values - combination 2

Design bending moment	Md=2.3051 kNm
Design shear force	Vd=2.5612 kN
Load duration factor	kmod=0.8
Design axial load (+ve compress)	Nd=0 kN

Section design parameters

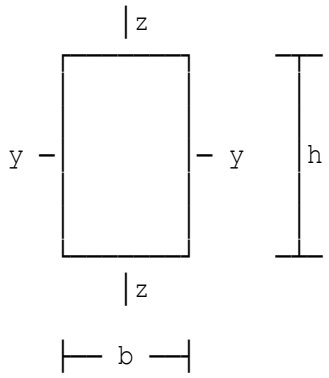

Depth of section	h=225 mm
Width of section	b=50 mm
Eff.length for bending about yy	ley=3600 mm
Eff.length for bending about zz	lez=0 mm
Length of bearing	lb=100 mm

Redwood / Whitewood SS grade table 10

Bending parallel to the grain	fmk=24 N/mm²
Compress parallel to the grain	fc0k=21 N/mm²
Compress perp to the grain	fc90k=2.5 N/mm²
Tension parallel to the grain	ft0k=14 N/mm²
Shear parallel to the grain	fvk=3 N/mm²
Mean modulus of elasticity	E0mean=11000 N/mm²
5th percentile MOE	E005=7400 N/mm²
Depth factor (Clause 3.2)	kh=1.0
Load-sharing modification factor	ksys=1.0
Depth of notch at support	notch=20 mm
Notch is on top edge of beam	kv=1
Bearing modification factor	kc90=1
Shear reduction factor	ksh=0.67

DESIGN SUMMARY

Member: 225 mm x 50 mm	
Redwood / Whitewood SS grade table 10	
Moisture service class	**1**
Design bending stress	**5.4639 N/mm²**
Design bending strength	**14.769 N/mm²**
Deflection	**5.5928 mm**
Limiting deflection	**14.4 mm**
Design shear stress	**0.37295 N/mm²**
Design shear strength	**1.2369 N/mm²**
Design bearing stress	**0.51224 N/mm²**
Design bearing strength	**1.5385 N/mm²**

NOTE: The above values relate to combination 2 and need to be compared with those of combination 1.

Location: Simply supported rectangular glulam section

Simply supported glulam beam to BS5268-2:2002

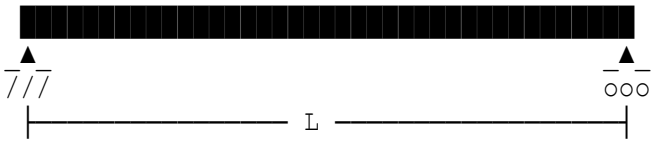

Simply supported beam subjected to vertical loads.

Beam span	L=4.5 m
Dist. from left support to start	Lau(1)=0 m
Distance from left support to end	Lbu(1)=4.5 m
Dead load (unfactored)	Gku(1)=6 kN/m
Imposed load (unfactored)	Qku(1)=12 kN/m
Maximum span bending moment	45.563 kNm
Design shear force	Fve'=40.5

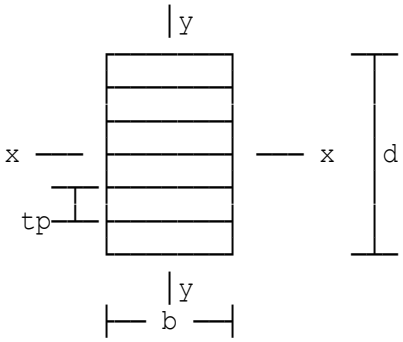

Rectangular glulam member with horizontal laminates

Member laterally restrained in bending

Design axial load (+ve compress)	F'=30.9 kN
Eff length for buckling about zz	Lex'=4.5 m
Eff length for buckling about yy	Ley'=0 m
Number of laminates in section	np=10
Thickness of laminates in section	tp=45 mm
Width of section	b=135 mm
Strength class C22 to Table 8.	
Timber service class adopted	tmclass=1
Timber service class modification	factor K2=1 as Table 16.
Duration of loading	K3=1.25
Depth factor	K7=0.81*(d^2+92300)/(d^2+56800) =0.92089
No notches exist at the support	K5=1.0

DESIGN SUMMARY

Laminate Thickness	**45 mm**
Number of laminates	**10**
Depth of section	**450 mm**
Width of section	**135 mm**

Strength class C22 to Table 8.

Moisture service class	**1**
Applied comprn @ Midsp	**0.50864 N/mm²**
Permiss comprn stress	**8.1199 N/mm²**
Applied bending stress	**10 N/mm²**
Permiss bending stress	**11.115 N/mm²**
Interact fact. @ Midsp	**0.96906**
Applied shear stress	**1 N/mm²**
Permiss shear stress	**2.0768 N/mm²**
Dead+imposed+shear Defl	**10.42 mm**
Limiting deflection	**13.5 mm**

No precamber of beam is necessary

Location: Rectangular glulam section; Axial & bending; User stresses

Simply supported glulam beam to BS5268-2:2002

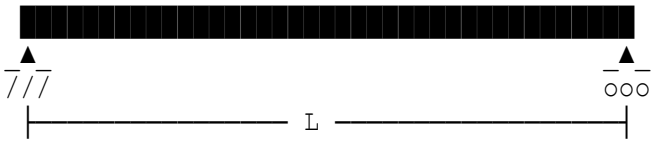

Simply supported beam subjected to vertical loads.

Beam span	L=6 m
Distance from left support	Lc(1)=2 m
Dead load (unfactored)	Gkc(1)=8 kN
Imposed load (unfactored)	Qkc(1)=0 kN
Distance from left support	Lc(2)=4 m
Dead load (unfactored)	Gkc(2)=8 kN
Imposed load (unfactored)	Qkc(2)=0 kN
Dist. from left support to start	Lau(1)=0 m
Distance from left support to end	Lbu(1)=6 m
Dead load (unfactored)	Gku(1)=5.5 kN/m
Imposed load (unfactored)	Qku(1)=0 kN/m
Maximum span bending moment	40.75 kNm
Design shear force	Fve'=24.5

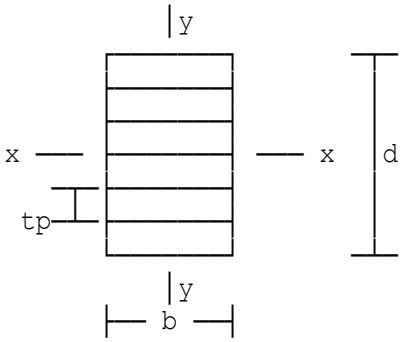

Rectangular glulam member with horizontal laminates

Member laterally restrained in bending

Design axial load (+ve compress)	F'=25 kN
Eff length for buckling about zz	Lex'=6 m
Eff length for buckling about yy	Ley'=1.5 m
Number of laminates in section	np=10
Thickness of laminates in section	tp=45 mm
Width of section	b=115 mm
Whitewood	
Bending parallel to the grain	bparg=7.5 N/mm²
Compress parallel to the grain	cparg=7.9 N/mm²
Compress perpendicular to the grain	cperd=2.1 N/mm²
Tension parallel to the grain	tparg=4.5 N/mm²
Shear parallel to the grain	sparg=0.82 N/mm²
Mean modulus of elasticity	Emean=10000 N/mm²
Minimum modulus of elasticity	Emin=7000 N/mm²

```
Timber service class adopted      tmclass=1
Timber service class modification factor K2=1 as Table 16.
Duration of loading               K3=1.25
Depth factor                      K7=0.81*(d^2+92300)/(d^2+56800)
                                    =0.92089
Modification factor               K15=1.39
Modification factor               K16=1.39
Modification factor               K17=1.04
Modification factor               K19=2.34
Modification factor               K20=1.07

No notches exist at the support   K5=1.0
```

DESIGN SUMMARY

Laminate Thickness	**45 mm**
Number of laminates	**10**
Depth of section	**450 mm**
Width of section	**115 mm**
Whitewood	
Moisture service class	**1**
Applied comprn @ Midsp	**0.48309 N/mm²**
Permiss comprn stress	**7.9001 N/mm²**
Applied bending stress	**10.499 N/mm²**
Permiss bending stress	**12 N/mm²**
Interact fact. @ Midsp	**0.94602**
Applied shear stress	**0.71014 N/mm²**
Permiss shear stress	**2.3985 N/mm²**
Dead+imposed+shear Defl	**17.91 mm**
Limiting deflection	**18 mm**
No precamber of beam is	**necessary**

Location: Rectangular glulam section; tension and bending

Simply supported glulam beam to BS5268-2:2002

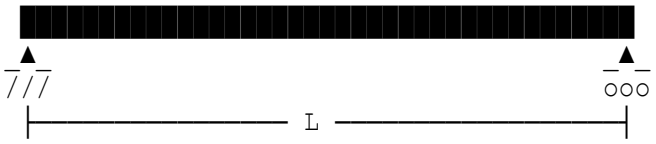

Simply supported beam subjected to vertical loads.

Beam span	L=6 m
Distance from left support	Lc(1)=2 m
Dead load (unfactored)	Gkc(1)=8 kN
Imposed load (unfactored)	Qkc(1)=0 kN
Distance from left support	Lc(2)=4 m
Dead load (unfactored)	Gkc(2)=8 kN
Imposed load (unfactored)	Qkc(2)=0 kN
Dist. from left support to start	Lau(1)=2 m
Distance from left support to end	Lbu(1)=4 m
Dead load (unfactored)	Gku(1)=5.5 kN/m
Imposed load (unfactored)	Qku(1)=0 kN/m
Maximum span bending moment	29.75 kNm
Design shear force	Fve'=13.5

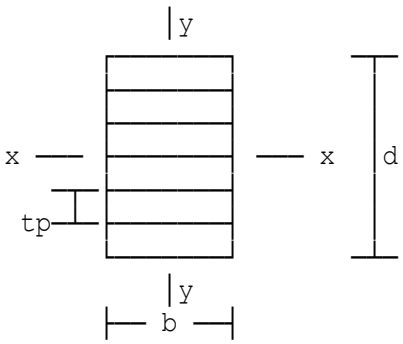

Rectangular glulam member with horizontal laminates

Member laterally restrained in bending

Design axial load (+ve compress)	F'=-40 kN
Number of laminates in section	np=10
Thickness of laminates in section	tp=45 mm
Width of section	b=90 mm
Strength class D70 to Table 8.	
Tensile area of section	At=40000 mm²
Timber service class adopted	tmclass=1
Timber service class modification	factor K2=1 as Table 16.
Duration of loading	K3=1.25
Depth factor	K7=0.81*(d^2+92300)/(d^2+56800) =0.92089
Width modification factor	K14=(300/h)^0.11=0.95638
No notches exist at the support	K5=1.0

DESIGN SUMMARY

Laminate Thickness	**45 mm**
Number of laminates	**10**
Depth of section	**450 mm**
Width of section	**90 mm**

Strength class D70 to Table 8.

Moisture service class	**1**
Applied tension stress	**1 N/mm²**
Permiss tension stress	**18.147 N/mm²**
Applied bending stress	**9.7942 N/mm²**
Permiss bending stress	**29.123 N/mm²**
Interact fact. @ Midsp	**0.39141**
Applied shear stress	**0.5 N/mm²**
Permiss shear stress	**4.8425 N/mm²**
Dead+imposed+shear Defl	**8.2184 mm**
Limiting deflection	**18 mm**

No precamber of beam is necessary

Location: Rectangular glulam section; comp and bending

Simply supported glulam beam to BS5268-2:2002

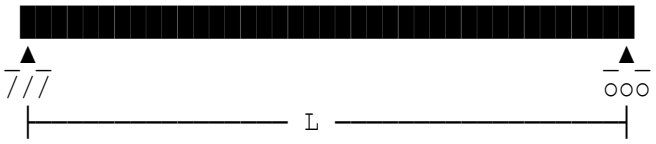

Simply supported beam subjected to vertical loads.

Beam span	L=6 m
Distance from left support	Lc(1)=1 m
Dead load (unfactored)	Gkc(1)=10 kN
Imposed load (unfactored)	Qkc(1)=0 kN
Distance from left support	Lc(2)=5 m
Dead load (unfactored)	Gkc(2)=10 kN
Imposed load (unfactored)	Qkc(2)=0 kN
Dist. from left support to start	Lau(1)=0 m
Distance from left support to end	Lbu(1)=6 m
Dead load (unfactored)	Gku(1)=5 kN/m
Imposed load (unfactored)	Qku(1)=5 kN/m
Maximum span bending moment	55 kNm
Design shear force	Fve'=40

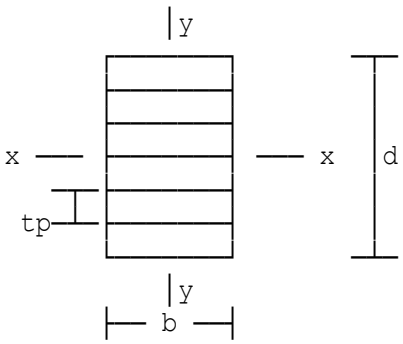

Rectangular glulam member with horizontal laminates

Member laterally restrained in bending

Design axial load (+ve compress)	F'=90 kN
Eff length for buckling about zz	Lex'=6 m
Eff length for buckling about yy	Ley'=1.5 m
Number of laminates in section	np=10
Thickness of laminates in section	tp=45 mm
Width of section	b=90 mm
Strength class D70 to Table 8.	
Timber service class adopted	tmclass=2
Timber service class modification	factor K2=1 as Table 16.
Duration of loading	K3=1.25
Depth factor	K7=0.81*(d^2+92300)/(d^2+56800) =0.92089

No notches exist at the support K5=1.0

DESIGN SUMMARY

Laminate Thickness	**45 mm**
Number of laminates	**10**
Depth of section	**450 mm**
Width of section	**90 mm**

Strength class D70 to Table 8.

Moisture service class	**2**
Applied comprn @ Midsp	**2.2222 N/mm²**
Permiss comprn stress	**19.562 N/mm²**
Applied bending stress	**18.107 N/mm²**
Permiss bending stress	**29.123 N/mm²**
Interact fact. @ Midsp	**0.75793**
Applied shear stress	**1.4815 N/mm²**
Permiss shear stress	**4.8425 N/mm²**
Dead+imposed+shear Defl	**16.019 mm**
Limiting deflection	**18 mm**

No precamber of beam is necessary

Location: Simply supported rectangular glulam section

Simply supported glulam beam to EC5

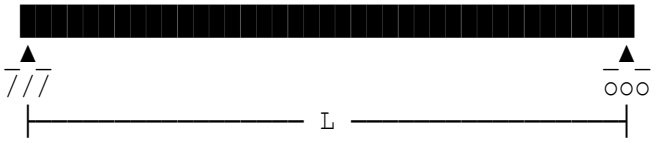

Simply supported beam subject to vertical loads.

Beam span	L=4.5 m
Dist. from left support to start	Lau(1)=0 m
Distance from left support to end	Lbu(1)=4.5 m
Permanent load (unfactored)	Gku(1)=6 kN/m
Variable load 1 (unfactored)	Qua(1)=12 kN/m

Characteristic values of actions

Permanent:	
Reaction at left hand end	13.5 kN
Reaction at right hand end	13.5 kN
Maximum span moment	Mkp=15.188 kNm
Maximum shear force	Fkp=13.5 kN
Variable 1:	
Reaction at left hand end	27 kN
Reaction at right hand end	27 kN
Maximum span moment	Mkv1=30.375 kNm
Maximum shear force	Fkv1=27 kN
Design axial load (+ve compress)	Nd=43.878 kN
Eff.length for buckling about yy	ley'=4.5 m
Eff.length for buckling about zz	lez'=0 m

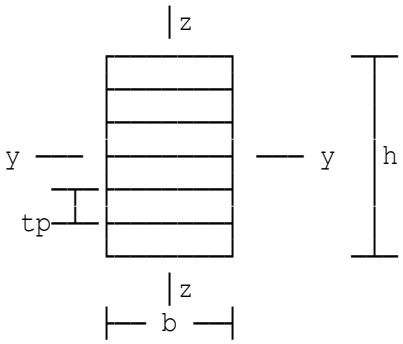

Rectangular glulam member

with horizontal laminates

Member laterally restrained

in bending

Number of laminates in section	np=10
Thickness of laminates in section	tp=45 mm
Width of section	b=135 mm
Length of bearing	lb=200 mm
Glulam strength class GL26h	

Depth factor (Clause 3.3)	kh=(600/h)^0.1=1.0292
Instability factor	kcy=1/(ky+(ky^2-rsry^2)^0.5)=0.96417
Instability factor	kcz=1/(kz+(kz^2-rsrz^2)^0.5)=1.0309
Max instability factor	kcz=1
No notches exist at the support	kv=1.0
Bearing modification factor	kc90=1.75
Shear reduction factor	ksh=0.67

DESIGN SUMMARY

Laminate Thickness	**45 mm**
Number of laminates	**10**
Depth of section	**450 mm**
Width of section	**135 mm**

Glulam strength class GL26h

Moisture service class	**1**
Design comprn @ Midsp	**0.72227 N/mm²**
Design comprn strength	**19.968 N/mm²**
Design bending stress	**14.5 N/mm²**
Design bending strength	**20.551 N/mm²**
Interact fact. @ Midsp	**0.74309**
Design shear stress	**1.4428 N/mm²**
Design shear strength	**1.801 N/mm²**
Final Deflection	**12.131 mm**
Limiting deflection	**18 mm**

No precamber of beam is necessary

Location: Rectangular glulam section; Axial & bending; User stresses

Simply supported glulam beam to EC5

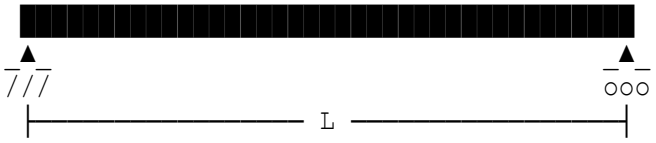

Simply supported beam subject to vertical loads.

Beam span	L=6 m
Distance from left support	Lc(1)=2 m
Permanent load (unfactored)	Gkc(1)=8 kN
Variable load 1 (unfactored)	Qca(1)=1 kN
Distance from left support	Lc(2)=4 m
Permanent load (unfactored)	Gkc(2)=8 kN
Variable load 1 (unfactored)	Qca(2)=0 kN
Dist. from left support to start	Lau(1)=0 m
Distance from left support to end	Lbu(1)=6 m
Permanent load (unfactored)	Gku(1)=5.56 kN/m
Variable load 1 (unfactored)	Qua(1)=0 kN/m

Characteristic values of actions

Permanent:	
Reaction at left hand end	24.68 kN
Reaction at right hand end	24.68 kN
Maximum span moment	Mkp=41.02 kNm
Maximum shear force	Fkp=24.68 kN
Variable 1:	
Reaction at left hand end	0.667 kN
Reaction at right hand end	0.3337 kN
Maximum span moment	Mkv1=1.3005 kNm
Maximum shear force	Fkv1=0.667 kN
Design axial load (+ve compress)	Nd=35.5 kN
Eff.length for buckling about yy	ley'=1.5 m
Eff.length for buckling about zz	lez'=0 m

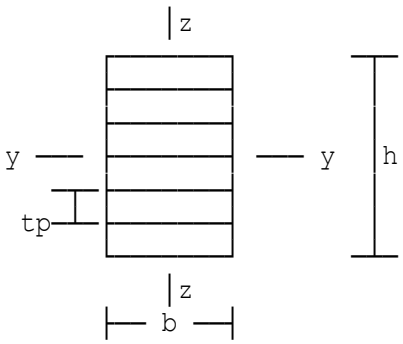

Rectangular glulam member

with horizontal laminates

Member laterally restrained

in bending

Number of laminates in section	np=10
Thickness of laminates in section	tp=45 mm
Width of section	b=115 mm

Length of bearing	lb=200 mm

Whitewood	
Bending parallel to the grain	fmk=32 N/mm²
Compress parallel to the grain	fc0k=31 N/mm²
Compress perp to the grain	fc90k=2.5 N/mm²
Shear parallel to the grain	fvk=3.5 N/mm²
Mean modulus of elasticity	E0mean=14700 N/mm²
5th percentile MOE	E005=11900 N/mm²
Depth factor (Clause 3.3)	kh=(600/h)^0.1=1.0292
Instability factor	kcy=1
Instability factor	kcz=1
No notches exist at the support	kv=1.0
Bearing modification factor	kc90=1
Shear reduction factor	ksh=0.67
Effective length about zz	Le=4.8 m

DESIGN SUMMARY

Laminate Thickness	**45 mm**
Number of laminates	**10**
Depth of section	**450 mm**
Width of section	**115 mm**
Whitewood	
Moisture service class	**1**
Design comprn @ Midsp	**0.68599 N/mm²**
Design comprn strength	**23.808 N/mm²**
Design bending stress	**14.77 N/mm²**
Design bending strength	**25.293 N/mm²**
Interact fact. @ Midsp	**0.5848**
Design shear stress	**0.98979 N/mm²**
Design shear strength	**1.801 N/mm²**
Final Deflection	**21.4 mm**
Limiting deflection	**24 mm**

No precamber of beam is necessary

Location: Simply supported glulam beam with axial load

Simply supported glulam beam to EC5

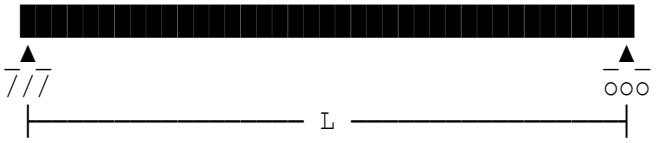

Simply supported beam subject to vertical loads.

Beam span	L=3.5 m
Dist. from left support to start	Lau(1)=0 m
Distance from left support to end	Lbu(1)=3.5 m
Permanent load (unfactored)	Gku(1)=0 kN/m
Variable load 1 (unfactored)	Qua(1)=20 kN/m

Characteristic values of actions

Permanent:	
Reaction at left hand end	0.175E-3 kN
Reaction at right hand end	0.175E-3 kN
Maximum span moment	Mkp=0.15313E-3 kNm
Maximum shear force	Fkp=0.175E-3 kN
Variable 1:	
Reaction at left hand end	35 kN
Reaction at right hand end	35 kN
Maximum span moment	Mkv1=30.625 kNm
Maximum shear force	Fkv1=35 kN
Design axial load (+ve compress)	Nd=77.63 kN
Eff.length for buckling about yy	ley'=3.5 m
Eff.length for buckling about zz	lez'=0 m

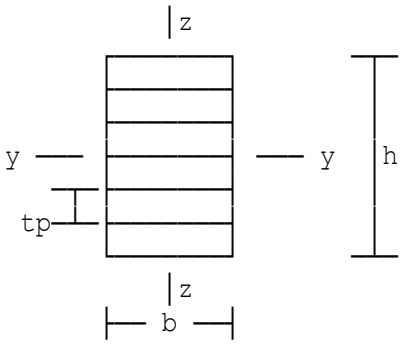

Rectangular glulam member

with horizontal laminates

Member laterally restrained

in bending

Number of laminates in section	np=27
Thickness of laminates in section	tp=20 mm
Width of section	b=165 mm
Length of bearing	lb=300 mm
Glulam strength class GL28h	

Depth factor (Clause 3.3)	kh=(600/h)^0.1=1.0106
Instability factor	kcy=1/(ky+(ky^2-rsry^2)^0.5)=0.99208
Instability factor	kcz=1/(kz+(kz^2-rsrz^2)^0.5)=1.0309
Max instability factor	kcz=1
No notches exist at the support	kv=1.0
Bearing modification factor	kc90=1.75
Shear reduction factor	ksh=0.67
Effective length about zz	Le=2.8 m

DESIGN SUMMARY

Laminate Thickness	**20 mm**
Number of laminates	**27**
Depth of section	**540 mm**
Width of section	**165 mm**

Glulam strength class GL28h

Moisture service class	**2**
Design comprn @ Midsp	**0.87127 N/mm²**
Design comprn strength	**21.504 N/mm²**
Design bending stress	**5.7286 N/mm²**
Design bending strength	**21.732 N/mm²**
Interact fact. @ Midsp	**0.30445**
Design shear stress	**0.87945 N/mm²**
Design shear strength	**1.801 N/mm²**
Final Deflection	**2.719 mm**
Limiting deflection	**14 mm**

No precamber of beam is necessary

Location: Simply supported glulam beam with axial load

Simply supported glulam beam to EC5

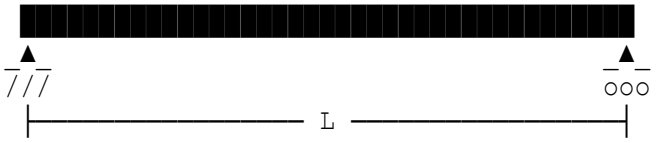

Simply supported beam subject to vertical loads.

Beam span	L=10 m
Dist. from left support to start	Lau(1)=0 m
Distance from left support to end	Lbu(1)=10 m
Permanent load (unfactored)	Gku(1)=1.94 kN/m
Variable load 1 (unfactored)	Qua(1)=2.25 kN/m

Characteristic values of actions

Permanent:	
Reaction at left hand end	9.7 kN
Reaction at right hand end	9.7 kN
Maximum span moment	Mkp=24.25 kNm
Maximum shear force	Fkp=9.7 kN
Variable 1:	
Reaction at left hand end	11.25 kN
Reaction at right hand end	11.25 kN
Maximum span moment	Mkv1=28.125 kNm
Maximum shear force	Fkv1=11.25 kN
Design axial load (+ve compress)	Nd=0 kN
Eff.length for buckling about yy	ley'=10 m
Eff.length for buckling about zz	lez'=0 m

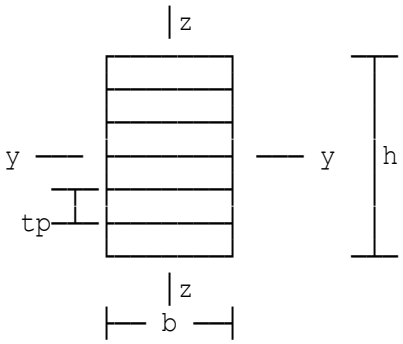

Rectangular glulam member

with horizontal laminates

Member laterally restrained

in bending

Number of laminates in section	np=45
Thickness of laminates in section	tp=12 mm
Width of section	b=115 mm
Length of bearing	lb=50 mm
Glulam strength class GL26h	

Depth factor (Clause 3.3)	kh=(600/h)^0.1=1.0106
No notches exist at the support	kv=1.0
Bearing modification factor	kc90=4
Shear reduction factor	ksh=0.67

DESIGN SUMMARY

Laminate Thickness	**12 mm**
Number of laminates	**45**
Depth of section	**540 mm**
Width of section	**115 mm**
Glulam strength class GL26h	
Moisture service class	**2**
Design bending stress	**13.406 N/mm²**
Design bending strength	**22.702 N/mm²**
Interact fact. @ Midsp	**0.59051**
Design shear stress	**0.72031 N/mm²**
Design shear strength	**2.0261 N/mm²**
Final Deflection	**47.206 mm**
Limiting deflection	**40 mm**
Precamber of beam	**13.834 mm**

Location: Rectangular glulam section; tension and bending (EC only)

Simply supported glulam beam to EC5

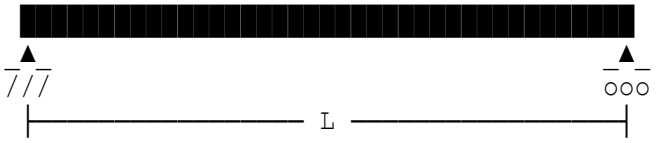

Simply supported beam subject to vertical loads.

Beam span	L=6 m
Distance from left support	Lc(1)=2 m
Permanent load (unfactored)	Gkc(1)=8 kN
Variable load 1 (unfactored)	Qca(1)=0 kN
Distance from left support	Lc(2)=4 m
Permanent load (unfactored)	Gkc(2)=8 kN
Variable load 1 (unfactored)	Qca(2)=0 kN
Dist. from left support to start	Lau(1)=0 m
Distance from left support to end	Lbu(1)=6 m
Permanent load (unfactored)	Gku(1)=3.56 kN/m
Variable load 1 (unfactored)	Qua(1)=0 kN/m

Characteristic values of actions

Permanent:	
Reaction at left hand end	18.68 kN
Reaction at right hand end	18.68 kN
Maximum span moment	Mkp=32.02 kNm
Maximum shear force	Fkp=18.68 kN
Variable 1:	
Reaction at left hand end	0.4E-3 kN
Reaction at right hand end	0.4E-3 kN
Maximum span moment	Mkv1=0.65E-3 kNm
Maximum shear force	Fkv1=0.4E-3 kN
Design axial load (+ve compress)	Nd=-57.2 kN
Eff.length for buckling about yy	ley'=6 m
Eff.length for buckling about zz	lez'=0 m

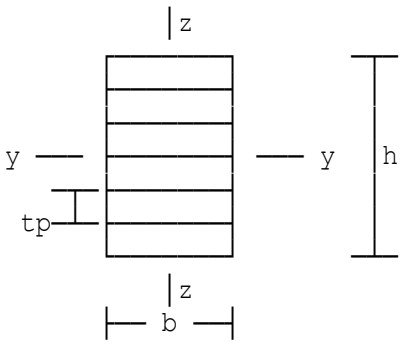

Rectangular glulam member

with horizontal laminates

Member laterally restrained

in bending

Number of laminates in section	np=10
Thickness of laminates in section	tp=45 mm
Width of section	b=90 mm

Length of bearing	lb=200 mm
Glulam strength class GL32h	
Tensile area of section	At=40000 mm²
Depth factor (Clause 3.3)	kh=(600/h)^0.1=1.0292
Width modification factor	kw=(600/lardim)^0.1=1.0292
No notches exist at the support	kv=1.0
Bearing modification factor	kc90=1.75
Shear reduction factor	ksh=0.67
Effective length about zz	Le=4.8 m

DESIGN SUMMARY

Laminate Thickness	**45 mm**
Number of laminates	**10**
Depth of section	**450 mm**
Width of section	**90 mm**

Glulam strength class GL32h

Moisture service class	**1**
Design tensile stress	**1.43 N/mm²**
Design tensile strength	**20.235 N/mm²**
Design bending stress	**14.231 N/mm²**
Design bending strength	**25.293 N/mm²**
Interact fact. @ Midsp	**0.63333**
Design shear stress	**0.92938 N/mm²**
Design shear strength	**1.801 N/mm²**
Final Deflection	**21.727 mm**
Limiting deflection	**24 mm**

No precamber of beam is necessary

Location: Rectangular glulam section; comp and bending (EC only)

Simply supported glulam beam to EC5

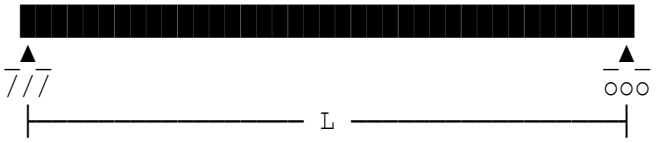

Simply supported beam subject to vertical loads.

Beam span	L=6 m
Distance from left support	Lc(1)=1 m
Permanent load (unfactored)	Gkc(1)=10 kN
Variable load 1 (unfactored)	Qca(1)=0 kN
Distance from left support	Lc(2)=5 m
Permanent load (unfactored)	Gkc(2)=10 kN
Variable load 1 (unfactored)	Qca(2)=0 kN
Dist. from left support to start	Lau(1)=0 m
Distance from left support to end	Lbu(1)=6 m
Permanent load (unfactored)	Gku(1)=4 kN/m
Variable load 1 (unfactored)	Qua(1)=4 kN/m

Characteristic values of actions

Permanent:	
Reaction at left hand end	22 kN
Reaction at right hand end	22 kN
Maximum span moment	Mkp=28 kNm
Maximum shear force	Fkp=22 kN
Variable 1:	
Reaction at left hand end	12 kN
Reaction at right hand end	12 kN
Maximum span moment	Mkv1=18 kNm
Maximum shear force	Fkv1=12 kN
Design axial load (+ve compress)	Nd=128.7 kN
Eff.length for buckling about yy	ley'=6 m
Eff.length for buckling about zz	lez'=1.5 m

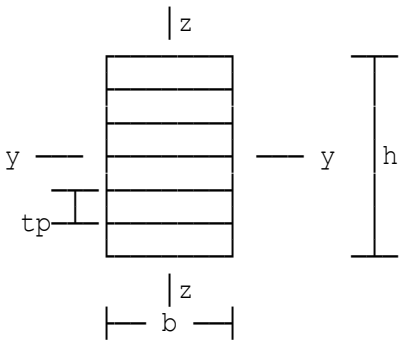

Rectangular glulam member

with horizontal laminates

Member laterally restrained

in bending

Number of laminates in section	np=10
Thickness of laminates in section	tp=45 mm
Width of section	b=90 mm

Length of bearing	lb=200 mm
Glulam strength class GL32h	
Depth factor (Clause 3.3)	kh=(600/h)^0.1=1.0292
Instability factor	kcy=1/(ky+(ky^2-rsry^2)^0.5)=0.90933
Instability factor	kcz=1/(kz+(kz^2-rsrz^2)^0.5)=0.80174
No notches exist at the support	kv=1.0
Bearing modification factor	kc90=1.75
Shear reduction factor	ksh=0.67

DESIGN SUMMARY

Laminate Thickness	**45 mm**
Number of laminates	**10**
Depth of section	**450 mm**
Width of section	**90 mm**
Glulam strength class GL32h	
Moisture service class	**2**
Design comprn @ Midsp	**3.1778 N/mm²**
Design comprn strength	**24.576 N/mm²**
Design bending stress	**21.333 N/mm²**
Design bending strength	**25.293 N/mm²**
Interact fact. @ Midsp	**0.98564**
Design shear stress	**1.7579 N/mm²**
Design shear strength	**1.801 N/mm²**
Final Deflection	**31.946 mm**
Limiting deflection	**24 mm**
Precamber of beam	**11.421 mm**

Location: Flitched timber beam with udl & point loads

Fully restrained flitched beam to BS5268-2:2002 and BS449

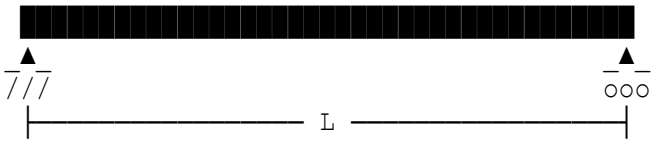

Beam span L=7.5 m
Section comprises steel plates to top & bottom faces of timber.
Depth of timber section d=300 mm
Width of timber section b=100 mm
Depth of steel section ds=12 mm
Width of steel section bs=100 mm
Length of bearing lb=150 mm
Bearing modification factor K4=1.0
Strength class C22 to Table 8.
Timber service class adopted tmclass=1
Timber service class modification factor K2=1 as Table 16.
Load-sharing modification factor K8=1.0

Section properties and Modular ratio

Total Inertia about xx axis in equivalent timber
Extreme fibre is steel plate Yc=Ys=162 mm
Dist of centroid to timber edge Yn=Yt=150 mm
Z to top edge of steel plate Zc=Ixx/Yc=12.765E6 mm³

Simply supported beam subjected to vertical loads.

Beam span L=7.5 m
Dist. from left support to start Lau(1)=0 m
Distance from left support to end Lbu(1)=7.5 m
Dead load (unfactored) Gku(1)=2.25 kN/m
Imposed load (unfactored) Qku(1)=1 kN/m
Maximum span bending moment 22.852 kNm
Design shear force Fve'=12.188

Duration of loading K3=1.25
Depth factor K7=(300/d)^0.11=1
Bolt diameter bd=20 mm
No of rows of bolts to be adopted NRC=1
Spacing of bolts along beam space=250 mm

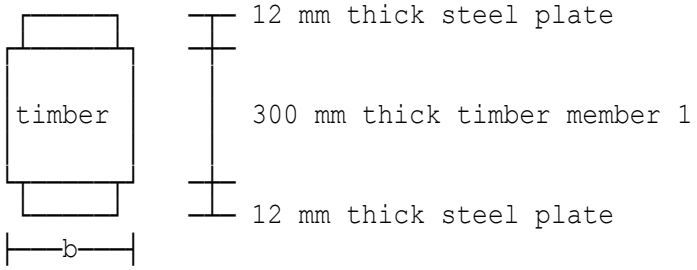

Timber characteristic density pk1=340 kg/m³
Angle between grain and load alp1'=0°

Bolt shear capacities

Basic loads in kN will be derived from formula given in Annex G.3
Load duration for bolted connection = Medium term.
Embedded strength for timber 1
Embedding strength fhod=0.050*(1-0.01*bd)*pk1*Ka=13.6
Embedding strength (Timb 1) fhd1=fhod/((K90*SIN(alp1)^2)
+COS(alp1)^2)=13.6
Equations G1 to G6 in annex G in BS5268-2:2002.

Basic bolt shear capacity basic=1*Gmin/(Fd*Kd)=11.356 kN
Mod factor for moisture content K56=1
Mod factor for number of bolts K57=1

Permissible bolt load pbl=basic*K46*K56*K57=14.195 kN

	Member: 324 mm x 100 mm overall	
DESIGN	**Modular ratio**	**31.538**
SUMMARY	**Timber bending stress**	**1.6575 N/mm²**
	Timber perm. bending	**8.5 N/mm²**
	Steel bending stress	**56.459 N/mm²**
	Steel perm. bending	**180 N/mm²**
	Deflection	**10.6 mm**
	Limiting deflection	**22.5 mm**
	Applied shear	**12.188 kN**
	Shear capacity	**17.75 kN**
	Bearing stress	**0.81253 N/mm²**
	Permissible bearing	**2.875 N/mm²**
	Applied load per bolt	**8.6992 kN**
	Permiss load per bolt	**14.195 kN**

Bolts are 20 mm diameter in 1 row(s) at 250 mm centres.

Location: Flitched timber beam with udl & point loads

Fully restrained flitched beam to BS5268-2:2002 and BS449

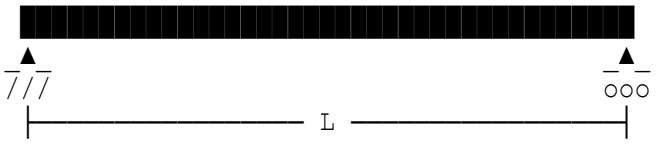

Beam span L=4.8 m
Section comprises one steel web plate with a timber member on each side.
Depth of timber section d=200 mm
Width of timber section b=50 mm
Depth of steel section ds=190 mm
Width of steel section bs=8 mm
Length of bearing lb=100 mm
From BS5268-2 Table 18, bearing is < 75 mm from joist end.
Bearing Modification factor K4=1.0
Strength class C18 to Table 8.
Timber service class adopted tmclass=1
Timber service class modification factor K2=1 as Table 16.
Load-sharing modification factor K8=1.1

Section properties and Modular ratio

Total Inertia about xx axis in equivalent timber
Extreme fibre is timber section Yc=Yt=100 mm
Dist of centroid to steel edge Yn=Ys=95 mm
Z to top edge of timber Zc=Ixx/Yc=2.229E6 mm³

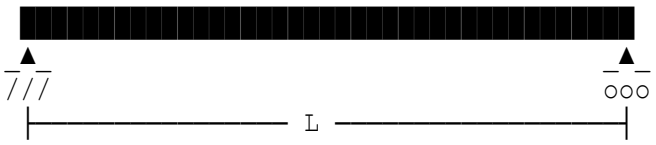

Simply supported beam subjected to vertical loads.

Beam span L=4.8 m
Dist. from left support to start Lau(1)=0 m
Distance from left support to end Lbu(1)=4.8 m
Dead load (unfactored) Gku(1)=1.2 kN/m
Imposed load (unfactored) Qku(1)=0.6 kN/m
Maximum span bending moment 5.184 kNm
Design shear force Fve'=4.32

Duration of loading K3=1
Depth factor K7=(300/d)^0.11=1.0456

Bolts between timber and steel plate along length of beam

Bolt diameter bd=16 mm
Spacing of bolts along beam space=500 mm
Bolts are in double shear. Width of timber for bolt stress calculation

```
is the section width b            bb=50 mm
Angle between grain and load      alp1'=90 degrees
Timber characteristic density     pk1=320 kg/m³
Basic loads in kN will be derived from formula given in Annex G.3
Load duration for bolted connection = Medium term.
Embedded strength for timber 1
Embedding strength                fhod=0.050*(1-0.01*bd)*pk1*Ka=17.78
Embedding strength (Timb 1)       fhd1=fhod/((K90*SIN(alp1)^2)
                                       +COS(alp1)^2)=11.182
Equations G7 to G10 in Annex G in BS5268-2:2002.
Equations  G7       G8       G9        G10
          8945.8   8945.8   6709.3    9226.4
Min value of equations G7 to G10  Gmin=6709.3

Basic bolt shear capacity         basic=1*Gmin/(Fd*Kd)=4.7923 kN
Mod factor for moisture content   K56=0.7
Mod factor for number of bolts    K57=1
Permissible bolt load in timber   pbl=2*basic*K46*K56*K57=6.7093 kN
```

Member: 200 mm x 108 mm overall

DESIGN	**Modular ratio**	**34.167**
SUMMARY	**Timber bending stress**	**2.3257 N/mm²**
	Timber perm. bending	**6.671 N/mm²**
	Steel bending stress	**75.489 N/mm²**
	Steel perm. bending	**180 N/mm²**
	Deflection	**9.5335 mm**
	Limiting deflection	**14 mm**
	Applied shear	**4.32 kN**
	Shear capacity	**9.8267 kN**
	Bearing stress	**0.432 N/mm²**
	Permissible bearing	**2.42 N/mm²**

Bolts are 16 mm diameter at 500 mm centres (10 No total).
Edge distance in the steel to be a minimum of 32 mm.
Bolts along the beam to be staggered above and below the centre line with their centres offset from the beam centre line to suit the min bolt edge spacing of 64 mm.
The minimum No of bolts required at the bearing = 2

Location: Flitched timber beam with udl & point loads

Fully restrained flitched beam to BS5268-2:2002 and BS449

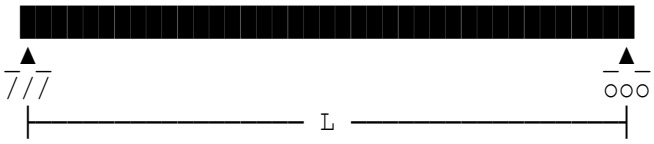

Beam span L=8 m
Section comprises steel plates to each side face of timber section.
Depth of timber section d=400 mm
Width of timber section b=100 mm
Depth of steel section ds=375 mm
Width of steel section bs=12 mm
Length of bearing lb=100 mm
From BS5268-2 Table 18, bearing is < 75 mm from joist end.
Bearing Modification factor K4=1.0
Strength class C18 to Table 8.
Timber service class adopted tmclass=2
Timber service class modification factor K2=1 as Table 16.
Load-sharing modification factor K8=1.0

Section properties and Modular ratio

Total Inertia about xx axis in equivalent timber
Extreme fibre is timber section Yc=Yt=200 mm
Dist of centroid to steel edge Yn=Ys=187.5 mm
Z to top edge of timber Zc=Ixx/Yc=20.684E6 mm³

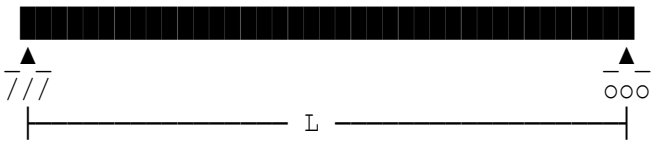

Simply supported beam subjected to vertical loads.

Beam span L=8 m
Distance from left support Lc(1)=2 m
Dead load (unfactored) Gkc(1)=6 kN
Imposed load (unfactored) Qkc(1)=4 kN
Dist. from left support to start Lau(1)=0 m
Distance from left support to end Lbu(1)=8 m
Dead load (unfactored) Gku(1)=4 kN/m
Imposed load (unfactored) Qku(1)=2 kN/m
Maximum span bending moment 58.52 kNm

Design shear force Fve'=31.5

Duration of loading K3=1.25
Depth factor K7=0.81*(d^2+92300)/(d^2+56800)
=0.94263

Bolts between timber and steel plate along length of beam

Bolt diameter bd=20 mm
Spacing of bolts along beam space=500 mm
Bolts are in double shear. Width of timber for bolt stress calculation is the section width b bb=100 mm
Angle between grain and load alp1'=90 degrees
Timber characteristic density pk1=320 kg/m³
Basic loads in kN will be derived from formula given in Annex G.3
Load duration for bolted connection = Medium term.
Embedded strength for timber 1
Embedding strength fhod=0.050*(1-0.01*bd)*pk1*Ka=16.933
Embedding strength (Timb 1) fhd1=fhod/((K90*SIN(alp1)^2)
+COS(alp1)^2)=10.262
Equations G1 to G6 in annex G in BS5268-2:2002.

Basic bolt shear capacity basic=1*Gmin/(Fd*Kd)=6.4748 kN
Mod factor for moisture content K56=0.7
Mod factor for number of bolts K57=1
Permissible bolt load in timber pbl=2*basic*K46*K56*K57=9.0647 kN

	Member: 400 mm x 124 mm overall	
DESIGN	**Modular ratio**	**34.167**
SUMMARY	**Timber bending stress**	**2.8292 N/mm²**
	Timber perm. bending	**6.8341 N/mm²**
	Steel bending stress	**90.623 N/mm²**
	Steel perm. bending	**180 N/mm²**
	Deflection	**16.386 mm**
	Limiting deflection	**24 mm**
	Applied shear	**31.5 kN**
	Shear capacity	**922.33 kN**
	Bearing stress	**13.125 N/mm²**
	Permissible bearing	**210 N/mm²**
	Plt buckling @ supp.	**4.5652 N/mm²**
	Perm. buckling stress	**72.922 N/mm²**

Bolts are 20 mm diameter at 500 mm centres (17 No total).
Edge distance in the steel to be a minimum of 40 mm.
Bolts along the beam to be staggered above and below the centre line with their centres offset from the beam centre line to suit the min bolt edge spacing of 80 mm.
The minimum No of bolts required at the bearing = 4

Location: Flitched timber beam with udl & point loads

Fully restrained flitched beam to BS5268-2:2002 and BS449

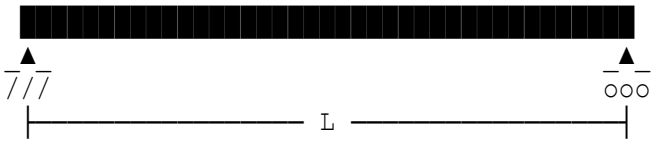


```
Beam span                          L=6 m
Section comprises two steel web plates and 3 timber members.
Depth of timber section            d=400 mm
Width of timber section            b=125 mm
Depth of steel section             ds=375 mm
Width of steel section             bs=16 mm
Length of bearing                  lb=150 mm
Bearing modification factor        K4=1.0
Strength class C22 to Table 8.
Timber service class adopted       tmclass=1
Timber service class modification  factor K2=1 as Table 16.
Load-sharing modification factor   K8=1.0
```

Section properties and Modular ratio

```
Total Inertia about xx axis in equivalent timber
Extreme fibre is timber section    Yc=Yt=200 mm
Dist of centroid to steel edge     Yn=Ys=187.5 mm
Z to top edge of timber            Zc=Ixx/Yc=32.175E6 mm³
```

Simply supported beam subjected to vertical loads.

```
Beam span                          L=6 m
Distance from left support         Lc(1)=3 m
Dead load (unfactored)             Gkc(1)=15.75 kN
Imposed load (unfactored)          Qkc(1)=78.438 kN
Dist. from left support to start   Lau(1)=0 m
Distance from left support to end  Lbu(1)=6 m
Dead load (unfactored)             Gku(1)=0.96 kN/m
Imposed load (unfactored)          Qku(1)=0 kN/m
Maximum span bending moment        145.6 kNm
Design shear force                 Fve'=49.974

Duration of loading                K3=1.25
Depth factor                       K7=0.81*(d^2+92300)/(d^2+56800)
                                     =0.94263
```

Bolts between timber and steel plate along length of beam

Bolt diameter bd=16 mm
Spacing of bolts along beam space=600 mm
Bolts are in double shear. Width of timber for bolt stress calculation is the section width b bb=125 mm
Angle between grain and load alp1'=90 degrees
Timber characteristic density pk1=340 kg/m³
Basic loads in kN will be derived from formula given in Annex G.3
Load duration for bolted connection = Long term.
Embedded strength for timber 1
Embedding strength fhod=0.038*(1-0.01*bd)*pk1*Ka=14.357
Embedding strength (Timb 1) fhd1=fhod/((K90*SIN(alp1)^2)
+COS(alp1)^2)=9.0297
Equations G1 to G6 in annex G in BS5268-2:2002.

Basic bolt shear capacity basic=1*Gmin/(Fd*Kd)=6.1123 kN
Mod factor for moisture content K56=0.7
Mod factor for number of bolts K57=1
Permissible bolt load in timber pbl=4*basic*K46*K56*K57=17.114 kN

	Member: 400 mm x 407 mm overall	
DESIGN	**Modular ratio**	**31.538**
SUMMARY	**Timber bending stress**	**4.5252 N/mm²**
	Timber perm. bending	**8.0124 N/mm²**
	Steel bending stress	**133.8 N/mm²**
	Steel perm. bending	**180 N/mm²**
	Deflection	**11.334 mm**
	Limiting deflection	**18 mm**
	Applied shear	**49.974 kN**
	Shear capacity	**88.75 kN**
	Bearing stress	**0.88843 N/mm²**
	Permissible bearing	**2.875 N/mm²**

Bolts are 16 mm diameter at 600 mm centres (11 No total).
Edge distance in the steel to be a minimum of 32 mm.
Bolts along the beam to be staggered above and below the centre line with their centres offset from the beam centre line to suit the min bolt edge spacing of 64 mm.
The minimum No of bolts required at the bearing = 3

Location: Flitched timber beam with udl & point loads

Fully restrained flitched beam to BS5268-2:2002 and BS449

Beam span L=7.5 m
Design BM about xx (positive) M'=22.852 kNm
Design shear force in y direction Fve'=12.188 kN
Design axial load (+ve compress) Fa=1.2 kN
Section comprises steel plates to top & bottom faces of timber.
Depth of timber section d=300 mm
Width of timber section b=100 mm
Depth of steel section ds=12 mm
Width of steel section bs=100 mm
Length of bearing lb=150 mm
Bearing modification factor K4=1.0
Strength class C22 to Table 8.
Timber service class adopted tmclass=1
Timber service class modification factor K2=1 as Table 16.
Load-sharing modification factor K8=1.0

Section properties and Modular ratio

Total Inertia about xx axis in equivalent timber
Extreme fibre is steel plate Yc=Ys=162 mm
Dist of centroid to timber edge Yn=Yt=150 mm
Z to top edge of steel plate Zc=Ixx/Yc=12.765E6 mm³
Duration of loading K3=1.25
Depth factor K7=(300/d)^0.11=1
Axial compression allowable stress Pc=170 N/mm²
Eff length for bending about xx Lex'=4 m
Eff length for bending about yy Ley'=4 m
Modification factor K12=(0.5+(1+eta)*C/2)-((0.5+(1+eta)*C/2)^2 -C)^0.5=0.19717
Percent proportion of load in timber gtar=28 %
Bolt diameter bd=20 mm
No of rows of bolts to be adopted NRC=1
Spacing of bolts along beam space=250 mm

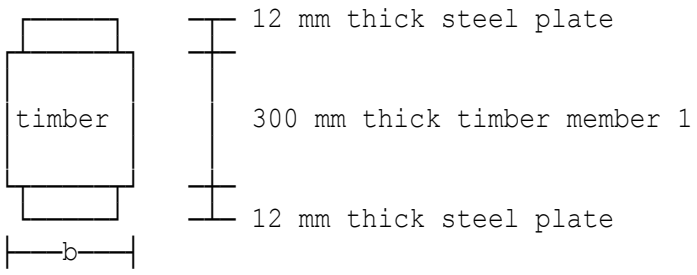

Timber characteristic density pk1=340 kg/m³
Angle between grain and load alp1'=0°

Bolt shear capacities

Basic loads in kN will be derived from formula given in Annex G.3
Load duration for bolted connection = Medium term.
Embedded strength for timber 1

Embedding strength	fhod=0.050*(1-0.01*bd)*pk1*Ka=13.6
Embedding strength (Timb 1)	fhd1=fhod/((K90*SIN(alp1)^2) +COS(alp1)^2)=13.6
Basic bolt shear capacity	basic=1*Gmin/(Fd*Kd)=11.356 kN
Mod factor for moisture content	K56=1
Mod factor for number of bolts	K57=1
Permissible bolt load	pbl=basic*K46*K56*K57=14.195 kN

Member: 324 mm x 100 mm overall

DESIGN SUMMARY	**Modular ratio**	**31.538**
	Timber bending stress	**1.6576 N/mm²**
	Timber perm. bending	**8.5 N/mm²**
	Steel bending stress	**56.46 N/mm²**
	Steel perm. bending	**180 N/mm²**
	Timber moisture class	**1**
	Applied comprn stress	**0.0112 N/mm²**
	Permiss comprn stress	**1.8485 N/mm²**
	Timber interaction factor	**0.20126**
	Steel interaction factor	**0.31578**
	Applied shear	**12.188 kN**
	Shear capacity	**17.75 kN**
	Bearing stress	**0.81253 N/mm²**
	Permissible bearing	**2.875 N/mm²**
	Applied load per bolt	**8.6992 kN**
	Permiss load per bolt	**14.195 kN**

Bolts are 20 mm diameter in 1 row(s) at 250 mm centres.
The end connections are beyond the scope of this proforma.

Location: Flitched timber beam with udl & point loads

Fully restrained flitched beam to BS5268-2:2002 and BS449

```
Beam span                          L=4.8 m
Design BM about xx (positive)      M'=5.184 kNm
Design shear force in y direction Fve'=4.32 kN
Design axial load (+ve compress)  Fa=-10.2 kN
Section comprises one steel web plate with a timber member on each side.
Depth of timber section            d=200 mm
Width of timber section            b=50 mm
Depth of steel section             ds=190 mm
Width of steel section             bs=8 mm
Length of bearing                  lb=100 mm
From BS5268-2 Table 18,  bearing is < 75 mm from joist end.
Bearing Modification factor        K4=1.0
Strength class C18 to Table 8.
Timber service class adopted       tmclass=1
Timber service class modification factor K2=1 as Table 16.
Load-sharing modification factor  K8=1.1
```

Section properties and Modular ratio

```
Total Inertia about xx axis in equivalent timber
Extreme fibre is timber section   Yc=Yt=100 mm
Dist of centroid to steel edge    Yn=Ys=95 mm
Z to top edge of timber           Zc=Ixx/Yc=2.229E6 mm³
Duration of loading               K3=1
Depth factor                      K7=(300/d)^0.11=1.0456
Tensile area of timber section    Tat=19000 mm²
Tensile area of steel section     Tas=1500 mm²
Width modification factor         K14=(300/h)^0.11=1.0456
Percent proportion of load in timber gtar=25 %
```

Bolts between timber and steel plate along length of beam

```
Bolt diameter                     bd=16 mm
Spacing of bolts along beam       space=600 mm
Bolts are in double shear.  Width of timber for bolt stress calculation
is the section width b            bb=50 mm
Angle between grain and load      alp1'=90 degrees
Timber characteristic density     pk1=320 kg/m³
Basic loads in kN will be derived from formula given in Annex G.3
Load duration for bolted connection = Medium term.
Embedded strength for timber 1
Embedding strength                fhod=0.050*(1-0.01*bd)*pk1*Ka=17.78
Embedding strength (Timb 1)       fhd1=fhod/((K90*SIN(alp1)^2)
                                       +COS(alp1)^2)=11.182
Equations G7 to G10 in Annex G in BS5268-2:2002.
Equations  G7       G8       G9        G10
          8945.8   8945.8   6709.3    9226.4
Min value of equations G7 to G10  Gmin=6709.3
```

Basic bolt shear capacity	basic=1*Gmin/(Fd*Kd)=4.7923 kN
Mod factor for moisture content	K56=0.7
Mod factor for number of bolts	K57=1
Permissible bolt load in timber	pbl=2*basic*K46*K56*K57=6.7093 kN

Member: 200 mm x 108 mm overall

DESIGN SUMMARY	**Modular ratio**	**34.167**
	Timber bending stress	**2.3257 N/mm²**
	Timber perm. bending	**6.671 N/mm²**
	Steel bending stress	**75.489 N/mm²**
	Steel perm. bending	**180 N/mm²**
	Timber tensile X sec area	**19000 mm²**
	Steel tensile X sec area	**1500 mm²**
	Timber moisture class	**1**
	Applied tension stress	**0.1275 N/mm²**
	Permiss tension stress	**4.0256 N/mm²**
	Timber interaction factor	**0.3803**
	Steel interaction factor	**0.44899**
	Applied shear	**4.32 kN**
	Shear capacity	**9.8267 kN**
	Bearing stress	**0.432 N/mm²**
	Permissible bearing	**2.42 N/mm²**

Bolts are 16 mm diameter at 600 mm centres (9 No total).
Edge distance in the steel to be a minimum of 32 mm.
The end connections are beyond the scope of this proforma.

Location: Flitched timber beam with udl & point loads

Fully restrained flitched beam to BS5268-2:2002 and BS449

Beam span L=4.8 m
Design BM about xx (positive) M'=5.184 kNm
Design shear force in y direction Fve'=4.32 kN
Design axial load (+ve compress) Fa=-10.2 kN
Section comprises one steel web plate with a timber member on each side.
Depth of timber section d=200 mm
Width of timber section b=50 mm
Depth of steel section ds=190 mm
Width of steel section bs=10 mm
Length of bearing lb=100 mm
From BS5268-2 Table 18, bearing is < 75 mm from joist end.
Bearing Modification factor K4=1.0

Bending parallel to the grain bparg=7.5 N/mm²
Compress parallel to the grain cparg=7.9 N/mm²
Compress perpendicular to the grain cperd=2.1 N/mm²
Tension parallel to the grain tparg=4.5 N/mm²
Shear parallel to the grain sparg=0.82 N/mm²
Mean modulus of elasticity Emean=10000 N/mm²
Minimum modulus of elasticity Emin=7000 N/mm²
Timber service class adopted tmclass=1
Timber service class modification factor K2=1 as Table 16.
Load-sharing modification factor K8=1.1

Section properties and Modular ratio

Total Inertia about xx axis in equivalent timber
Extreme fibre is timber section Yc=Yt=100 mm
Dist of centroid to steel edge Yn=Ys=95 mm
Z to top edge of timber Zc=Ixx/Yc=2.3406E6 mm³
Duration of loading K3=1
Depth factor K7=(300/d)^0.11=1.0456
Tensile area of timber section Tat=19000 mm²
Tensile area of steel section Tas=1500 mm²
Width modification factor K14=(300/h)^0.11=1.0456
Percent proportion of load in timber gtar=25 %

Bolts between timber and steel plate along length of beam

Bolt diameter bd=16 mm
Spacing of bolts along beam space=600 mm
Bolts are in double shear. Width of timber for bolt stress calculation is the section width b bb=50 mm
Angle between grain and load alp1'=90 degrees
Characteristic density timber 1 pk1=420 kg/m³
Basic loads in kN will be derived from formula given in Annex G.3
Load duration for bolted connection = Medium term.
Embedded strength for timber 1

```
Embedding strength                fhod=0.050*(1-0.01*bd)*pk1*Ka=23.336
Embedding strength (Timb 1)       fhd1=fhod/((K90*SIN(alp1)^2)
                                       +COS(alp1)^2)=14.677
Equations G7 to G10 in Annex G in BS5268-2:2002.
Equations  G7       G8       G9        G10
          11741    11741    7886      10570
Min value of equations G7 to G10  Gmin=7886

Basic bolt shear capacity         basic=1*Gmin/(Fd*Kd)=5.6328 kN
Mod factor for moisture content   K56=0.7
Mod factor for number of bolts    K57=1
Permissible bolt load in timber   pbl=2*basic*K46*K56*K57=7.886 kN
```

	Member: 200 mm x 110 mm overall	
DESIGN	**Modular ratio**	**29.286**
SUMMARY	**Timber bending stress**	**2.2148 N/mm²**
	Timber perm. bending	**8.6263 N/mm²**
	Steel bending stress	**61.62 N/mm²**
	Steel perm. bending	**180 N/mm²**
	Timber tensile X sec area	**19000 mm²**
	Steel tensile X sec area	**1500 mm²**
	Timber moisture class	**1**
	Applied tension stress	**0.1275 N/mm²**
	Permiss tension stress	**5.1758 N/mm²**
	Timber interaction factor	**0.28139**
	Steel interaction factor	**0.36602**
	Applied shear	**4.32 kN**
	Shear capacity	**12.027 kN**
	Bearing stress	**0.432 N/mm²**
	Permissible bearing	**2.31 N/mm²**

Bolts are 16 mm diameter at 600 mm centres (9 No total).
Edge distance in the steel to be a minimum of 32 mm.
The end connections are beyond the scope of this proforma.

Location: Flitched timber beam with udl & point loads

Fully restrained flitched beam to BS5268-2:2002 and BS449

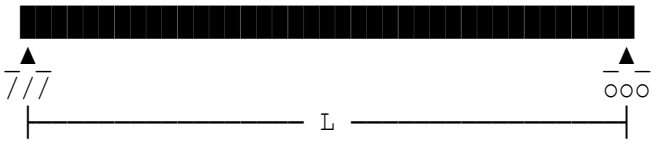

Beam span L=6 m
Section comprises one steel web plate with a timber member on each side.
Depth of timber section d=250 mm
Width of timber section b=75 mm
Depth of steel section ds=225 mm
Width of steel section bs=12 mm
Length of bearing lb=100 mm
From BS5268-2 Table 18, bearing is < 75 mm from joist end.
Bearing Modification factor K4=1.0

WARNING: Strength class not recognised. The scr ref no SHOULD BE 16 or 17.

Location: Flitched timber beam with udl & point loads

Fully restrained flitched beam to BS5268-2:2002 and BS449

```
Beam span                          L=5.5 m
Design BM about xx (positive)      M'=9.1816 kNm
Design shear force in y direction Fve'=6.6776 kN
Design axial load (+ve compress)  Fa=0 kN
Section comprises one steel web plate with a timber member on each side.
Depth of timber section            d=225 mm
Width of timber section            b=50 mm
Depth of steel section             ds=175 mm
Width of steel section             bs=10 mm
Length of bearing                  lb=50 mm
From BS5268-2 Table 18,  bearing is < 75 mm from joist end.
Bearing Modification factor        K4=1.0
Strength class C16 to Table 8.
Timber service class adopted       tmclass=2
Timber service class modification factor K2=1 as Table 16.
Load-sharing modification factor  K8=1.0
```

Section properties and Modular ratio

```
Total Inertia about xx axis in equivalent timber
Extreme fibre is timber section   Yc=Yt=112.5 mm
Dist of centroid to steel edge    Yn=Ys=87.5 mm
Z to top edge of timber           Zc=Ixx/Yc=2.2469E6 mm³
Duration of loading               K3=1.25
Depth factor                      K7=(300/d)^0.11=1.0322
```

Bolts between timber and steel plate along length of beam

```
Bolt diameter                     bd=16 mm
Spacing of bolts along beam       space=450 mm
Bolts are in double shear.  Width of timber for bolt stress calculation
is the section width b            bb=50 mm
Angle between grain and load      alp1'=90 degrees
Timber characteristic density     pk1=310 kg/m³
Basic loads in kN will be derived from formula given in Annex G.3
Load duration for bolted connection = Medium term.
Embedded strength for timber 1
Embedding strength                fhod=0.050*(1-0.01*bd)*pk1*Ka=17.224
Embedding strength (Timb 1)       fhd1=fhod/((K90*SIN(alp1)^2)
                                       +COS(alp1)^2)=10.833
Equations  G7       G8       G9        G10
          8666.2   8666.2   6588      9081.1
Min value of equations G7 to G10  Gmin=6588

Basic bolt shear capacity         basic=1*Gmin/(Fd*Kd)=4.7057 kN
Mod factor for moisture content   K56=1
Mod factor for number of bolts    K57=0.7
```

Permissible bolt load in timber pbl=2*basic*K46*K56*K57=6.588 kN

	Member: 225 mm x 110 mm overall	
DESIGN	**Modular ratio**	**35.345**
SUMMARY	**Timber bending stress**	**4.0863 N/mm²**
	Timber perm. bending	**6.838 N/mm²**
	Steel bending stress	**112.33 N/mm²**
	Steel perm. bending	**180 N/mm²**
	Timber moisture class	**2**
	Applied shear	**6.6776 kN**
	Shear capacity	**12.563 kN**
	Bearing stress	**1.3355 N/mm²**
	Permissible bearing	**2.75 N/mm²**

Bolts are 16 mm diameter at 450 mm centres (13 No total).
Edge distance in the steel to be a minimum of 32 mm.
The end connections are beyond the scope of this proforma.

Location: Flitched timber beam with udl & point loads

Fully Restrained flitched beam to EC5 and EC3

Calculations include EC5 National Annex Amendment No.2.

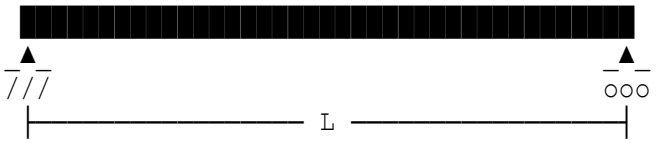

Simply supported beam subject to vertical loads.

Beam span	L=7.5 m
Dist. from left support to start	Lau(1)=0 m
Distance from left support to end	Lbu(1)=7.5 m
Permanent load (unfactored)	Gku(1)=2.25 kN/m
Variable load 1 (unfactored)	Qua(1)=0.5 kN/m
Variable load 2 (unfactored)	Qub(1)=0.5 kN/m

Characteristic values of actions

Permanent:	
Reaction at left hand end	8.4375 kN
Reaction at right hand end	8.4375 kN
Maximum span moment	Mkp=15.82 kNm
Maximum shear force	Fkp=8.4375 kN
Variable 1:	
Reaction at left hand end	1.875 kN
Reaction at right hand end	1.875 kN
Maximum span moment	Mkv1=3.5156 kNm
Maximum shear force	Fkv1=1.875 kN
Variable 2:	
Reaction at left hand end	1.875 kN
Reaction at right hand end	1.875 kN
Maximum span moment	Mkv2=3.5156 kNm
Maximum shear force	Fkv2=1.875 kN

Design values of combined actions for ULS

Design moment	Md1=gamG*Mkp+gamQ*Mkv2=26.63 kNm
Design shear force	Vd1=gamG*Fkp+gamQ*Fkv2=14.203 kN

Design values - combination 1

Design bending moment	Md'=26.63 kNm
Design shear force	Vd'=14.203 kN
Load duration factor	kmod=0.8

Section comprises steel plates to top & bottom faces of timber.

Depth of timber section h=300 mm
Width of timber section b=100 mm
Depth of steel section ds=12 mm
Width of steel section bs=100 mm
Length of bearing lb=150 mm
Timber strength class C22.

Section design values

Design bending moment Md=Md'*10^6=26.63E6 Nmm
Design shear force Vd=Vd'*10^3=14203 N
Design axial load (+ve compress) Nd=0 kN
Depth factor (Clause 3.2) kh=1.0
Bearing modification factor kc90=1.5
Load-sharing modification factor ksys=1.0
Shear reduction factor ksh=0.67
Bolt diameter bd=20 mm
No of rows of bolts to be adopted NRC=1
Spacing of bolts along beam space=250 mm

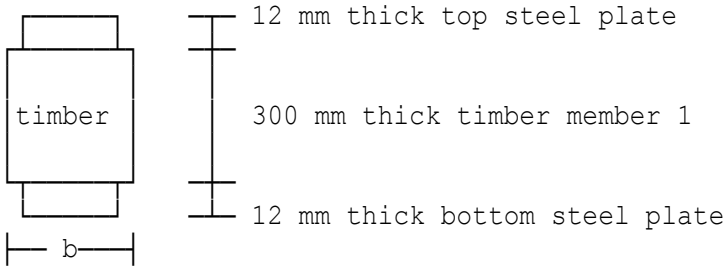

Timber characteristic density pk1=340 kg/m³
Angle between grain and load alp1'=0°

Bolt shear capacities

Basic loads in kN will be derived from the expressions in Section 8 of Eurocode 5.
Char. value of yield moment MyRk=0.3*400*bd^2.6=289640
Char. embedment strength fhok=0.082*(1-0.01*bd)*pk1=22.304
Denominator (expression 8.31) denom=((K90*SIN(alp1)^2)
+COS(alp1)^2)=1
Embedment strength (timber 1) fh1k=fhok/denom=22.304
Embedment strength (timber 2) fh2k=22.304
Factor beta=fh2k/fh1k=1
Expressions (a) to (e) for fasteners in single shear refer to section 8.2.3 in EC5. Zero contribution from rope effect will be considered.
Min value of equations (a)-(e) Gmin=22184

Basic bolt shear resistance basic=Gmin/1000=22.184 kN

Design resistance per bolt pbl=kmod/gamM2*basic=10.239 kN

	Member: 324 mm x 100 mm overall	
	Modular ratio	**31.343**
DESIGN	**Timber bending stress**	**1.9423 N/mm²**
SUMMARY	**Timber design bending strength**	**10.154 N/mm²**
	Steel design bending stress	**65.749 N/mm²**
	Steel design bending strength	**275 N/mm²**
	Final deflection	**11.561 mm**
	Limiting deflection	**30 mm**
	Design shear force	**14.203 kN**
	Design Shear resistance	**23.502 kN**
	Design bearing stress	**0.94687 N/mm²**
	Design bearing strength	**1.6615 N/mm²**
	Design load per bolt	**10.131 kN**
	Design bolt resistance	**10.239 kN**

Bolts are 20 mm diameter in 1 row(s) at 250 mm centres.
NOTE: The above values relate to combination 1 and need to be compared with those of combination 2.

Location: Flitched timber beam

Fully Restrained flitched beam to EC5 and EC3

Calculations include EC5 National Annex Amendment No.2.

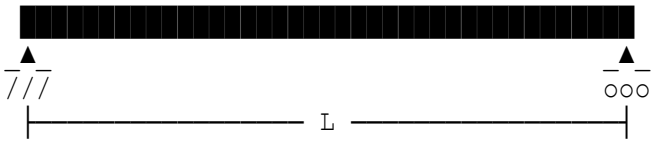

Simply supported beam subject to vertical loads.

Beam span	L=4.8 m
Dist. from left support to start	Lau(1)=0 m
Distance from left support to end	Lbu(1)=4.8 m
Permanent load (unfactored)	Gku(1)=1.2 kN/m
Variable load 1 (unfactored)	Qua(1)=0.6 kN/m

Characteristic values of actions

Permanent:	
Reaction at left hand end	2.88 kN
Reaction at right hand end	2.88 kN
Maximum span moment	Mkp=3.456 kNm
Maximum shear force	Fkp=2.88 kN
Variable 1:	
Reaction at left hand end	1.44 kN
Reaction at right hand end	1.44 kN
Maximum span moment	Mkv1=1.728 kNm
Maximum shear force	Fkv1=1.44 kN

Design values of combined actions for ULS

Design bending moment	Md'=gamG*Mkp+gamQ*Mkv1=7.2576 kNm
Design shear force	Vd'=gamG*Fkp+gamQ*Fkv1=6.048 kN

Section comprises one steel web plate with a timber member on each side.

Depth of timber section	h=200 mm
Width of timber section	b=50 mm
Depth of steel section	ds=190 mm
Width of steel section	bs=8 mm
Length of bearing	lb=100 mm

Timber strength class C18.

Section design values

Design bending moment	Md=Md'*10^6=7.2576E6 Nmm
Design shear force	Vd=Vd'*10^3=6048 N
Design axial load (+ve compress)	Nd=0 kN
Depth factor (Clause 3.2)	kh=1.0
Bearing modification factor	kc90=1.5
Load-sharing modification factor	ksys=1.1
Shear reduction factor	ksh=0.67

Bolts between timber and steel plate along length of beam

Bolt diameter bd=16 mm
Spacing of bolts along beam space=500 mm
Bolts are in double shear. Width of timber for bolt stress calculation is the section width b bb=50 mm
Angle between grain and load alp1'=90 degrees
Timber characteristic density pk1=320 kg/m³
Basic loads in kN will be derived from the expressions in Section 8 of Eurocode 5.
Char. value of yield moment MyRk=0.3*400*bd^2.6=162141
Char. embedment strength fhok=0.082*(1-0.01*bd)*pk1=22.042
Denominator (expression 8.31) denom=((K90*SIN(alp1)^2)
+COS(alp1)^2)=1.59
Embedment strength (timber 1) fh1k=fhok/denom=13.863
Embedment strength (timber 2) fh2k=13.863
Factor beta=fh2k/fh1k=1

Expressions (f) to (m) for fasteners in double shear refer to section 8.2.3 in EC5. Zero contribution from rope effect will be considered.

Equations	f	g	h
	11090	8654.1	13793

Min value of equations (f)-(h) Gmin=8654.1

Basic bolt shear resistance basic=Gmin/1000=8.6541 kN
Design bolt resistance in timber pbl=2*kmod/gamM2*basic=7.9884 kN

	Member: 200 mm x 108 mm overall	
	Modular ratio	**35**
DESIGN	**Timber bending stress**	**3.2013 N/mm²**
SUMMARY	**Timber design bending strength**	**9.1385 N/mm²**
	Steel design bending stress	**106.44 N/mm²**
	Steel design bending strength	**275 N/mm²**
	Final deflection	**10.672 mm**
	Limiting deflection	**19.2 mm**
	Design shear force	**6.048 kN**
	Design Shear resistance	**15.42 kN**
	Design bearing stress	**0.6048 N/mm²**
	Design bearing strength	**1.6754 N/mm²**

Bolts are 16 mm diameter at 500 mm c/c (10 No total).
Edge distance in the steel to be a minimum of 32 mm.
Bolts along the beam to be staggered above and below the centre line with their centres offset from the beam centre line to suit the min bolt edge spacing of 64 mm.
The minimum No of bolts required at the bearing = 2

Location: Flitched timber beam

Fully Restrained flitched beam to EC5 and EC3

Calculations include EC5 National Annex Amendment No.2.

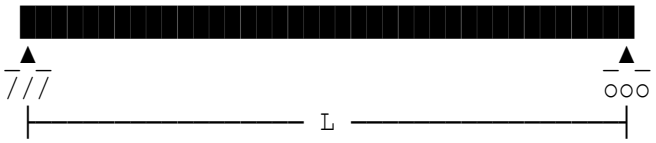

Simply supported beam subject to vertical loads.

Beam span	L=8 m
Distance from left support	Lc(1)=2 m
Permanent load (unfactored)	Gkc(1)=6 kN
Variable load 1 (unfactored)	Qca(1)=4 kN
Dist. from left support to start	Lau(1)=0 m
Distance from left support to end	Lbu(1)=8 m
Permanent load (unfactored)	Gku(1)=4 kN/m
Variable load 1 (unfactored)	Qua(1)=2 kN/m

Characteristic values of actions

Permanent:	
Reaction at left hand end	20.5 kN
Reaction at right hand end	17.5 kN
Maximum span moment	Mkp=38.28 kNm
Maximum shear force	Fkp=20.5 kN
Variable 1:	
Reaction at left hand end	11 kN
Reaction at right hand end	9 kN
Maximum span moment	Mkv1=20.24 kNm
Maximum shear force	Fkv1=11 kN

Design values of combined actions for ULS

Design bending moment	Md'=gamG*Mkp+gamQ*Mkv1=82.038 kNm
Design shear force	Vd'=gamG*Fkp+gamQ*Fkv1=44.175 kN
Section comprises steel plates to	each side face of timber section.
Depth of timber section	h=400 mm
Width of timber section	b=100 mm
Depth of steel section	ds=375 mm
Width of steel section	bs=12 mm
Length of bearing	lb=100 mm

Timber strength class C18.

Section design values

Design bending moment	Md=Md'*10^6=82.038E6 Nmm
Design shear force	Vd=Vd'*10^3=44175 N
Design axial load (+ve compress)	Nd=0 kN
Depth factor (Clause 3.2)	kh=1.0
Bearing modification factor	kc90=1.5
Load-sharing modification factor	ksys=1.0

Shear reduction factor ksh=0.67
Effective length about zz Le=6.4 m

Bolts between timber and steel plate along length of beam

Bolt diameter bd=20 mm
Spacing of bolts along beam space=500 mm
Bolts are in double shear. Width of timber for bolt stress calculation is the section width b bb=100 mm
Angle between grain and load alp1'=90 degrees
Timber characteristic density pk1=320 kg/m³
Basic loads in kN will be derived from the expressions in Section 8 of Eurocode 5.
Char. value of yield moment MyRk=0.3*400*bd^2.6=289640
Char. embedment strength fhok=0.082*(1-0.01*bd)*pk1=20.992
Denominator (expression 8.31) denom=((K90*SIN(alp1)^2)
+COS(alp1)^2)=1.65
Embedment strength (timber 1) fh1k=fhok/denom=12.722
Embedment strength (timber 2) fh2k=12.722
Factor beta=fh2k/fh1k=1

Expressions (j) to (m) for fasteners in double shear refer to section 8.2.3 in EC5. Zero contribution from rope effect will be considered.

Equations	j	k	l	m
	12722	13962	12722	19745

Min value of equations (j)-(m) Gmin=12722

Basic bolt shear resistance basic=Gmin/1000=12.722 kN
Design bolt resistance in timber pbl=2*kmod/gamM2*basic=15.658 kN

	Member: 400 mm x 124 mm overall	
	Modular ratio	**35**
DESIGN	**Timber bending stress**	**3.8837 N/mm²**
SUMMARY	**Timber design bending strength**	**9.0365 N/mm²**
	Steel design bending stress	**127.43 N/mm²**
	Steel design bending strength	**275 N/mm²**
	Final deflection	**22.235 mm**
	Limiting deflection	**32 mm**
	Design shear force	**44.175 kN**
	Design Shear resistance	**1466.3 kN**
	Design bearing stress	**18.406 N/mm²**
	Design bearing strength	**265 N/mm²**
	Plt buckling @ supp.	**6.4022 N/mm²**
	Design buckling strength	**117.89 N/mm²**

Bolts are 20 mm diameter at 500 mm c/c (17 No total).
Edge distance in the steel to be a minimum of 40 mm.
Bolts along the beam to be staggered above and below the centre line with their centres offset from the beam centre line to suit the min bolt edge spacing of 80 mm.
The minimum No of bolts required at the bearing = 3
The steel plates are required to extend over the support and act together with the timber to resist the design bearing stress.

Location: Flitched timber beam

Fully Restrained flitched beam to EC5 and EC3

Calculations include EC5 National Annex Amendment No.2.

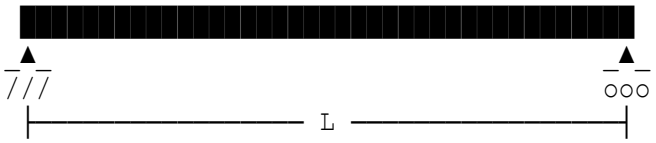

Simply supported beam subject to vertical loads.

Beam span	L=6 m
Distance from left support	Lc(1)=3 m
Permanent load (unfactored)	Gkc(1)=15.75 kN
Variable load 1 (unfactored)	Qca(1)=78.438 kN
Dist. from left support to start	Lau(1)=0 m
Distance from left support to end	Lbu(1)=6 m
Permanent load (unfactored)	Gku(1)=0.96 kN/m
Variable load 1 (unfactored)	Qua(1)=0 kN/m

Characteristic values of actions

Permanent:	
Reaction at left hand end	10.755 kN
Reaction at right hand end	10.755 kN
Maximum span moment	Mkp=27.945 kNm
Maximum shear force	Fkp=10.755 kN
Variable 1:	
Reaction at left hand end	39.219 kN
Reaction at right hand end	39.219 kN
Maximum span moment	Mkv1=117.66 kNm
Maximum shear force	Fkv1=39.219 kN

Design values of combined actions for ULS

Design bending moment	Md'=gamG*Mkp+gamQ*Mkv1=214.22 kNm
Design shear force	Vd'=gamG*Fkp+gamQ*Fkv1=73.348 kN

Section comprises two steel web plates and 3 timber members.

Depth of timber section	h=400 mm
Width of timber section	b=125 mm
Depth of steel section	ds=375 mm
Width of steel section	bs=16 mm
Length of bearing	lb=150 mm

Timber strength class C22.

Section design values

Design bending moment	Md=Md'*10^6=214.22E6 Nmm
Design shear force	Vd=Vd'*10^3=73348 N
Design axial load (+ve compress)	Nd=0 kN
Depth factor (Clause 3.2)	kh=1.0
Bearing modification factor	kc90=1.5
Load-sharing modification factor	ksys=1.0

Shear reduction factor ksh=0.67

Bolts between timber and steel plate along length of beam

Bolt diameter bd=16 mm
Spacing of bolts along beam space=600 mm
Bolts are in double shear. Width of timber for bolt stress calculation is the section width b bb=125 mm
Angle between grain and load alp1'=90 degrees
Timber characteristic density pk1=340 kg/m³
Basic loads in kN will be derived from the expressions in Section 8 of Eurocode 5.
Char. value of yield moment MyRk=0.3*400*bd^2.6=162141
Char. embedment strength fhok=0.082*(1-0.01*bd)*pk1=23.419
Denominator (expression 8.31) denom=((K90*SIN(alp1)^2)
+COS(alp1)^2)=1.59
Embedment strength (timber 1) fh1k=fhok/denom=14.729
Embedment strength (timber 2) fh2k=14.729
Factor beta=fh2k/fh1k=1
Expressions (a) to (e) for fasteners in single shear refer to section 8.2.3 in EC5. Zero contribution from rope effect will be considered.
Min value of equations (a)-(e) Gmin=13998

Basic bolt shear resistance basic=Gmin/1000=13.998 kN
Design bolt resistance in timber pbl=4*kmod/gamM2*basic=34.456 kN

	Member: 400 mm x 407 mm overall	
	Modular ratio	**31.343**
DESIGN	**Timber bending stress**	**6.6863 N/mm²**
SUMMARY	**Timber design bending strength**	**13.538 N/mm²**
	Steel design bending stress	**196.47 N/mm²**
	Steel design bending strength	**275 N/mm²**
	Final deflection	**17.62 mm**
	Limiting deflection	**24 mm**
	Design shear force	**73.348 kN**
	Design Shear resistance	**156.68 kN**
	Design bearing stress	**1.304 N/mm²**
	Design bearing strength	**2.2154 N/mm²**

Bolts are 16 mm diameter at 600 mm c/c (11 No total).
Edge distance in the steel to be a minimum of 32 mm.
Bolts along the beam to be staggered above and below the centre line with their centres offset from the beam centre line to suit the min bolt edge spacing of 64 mm.
The minimum No of bolts required at the bearing = 2

Location: Flitched timber beam

Fully Restrained flitched beam to EC5 and EC3

Calculations include EC5 National Annex Amendment No.2.
Beam span L=7.5 m
Design BM about yy (positive) Md'=32.45 kNm
Design shear force in z direction Vd'=17.307 kN
Design axial load (+ve compress) Nd=1.704 kN
Section comprises steel plates to top & bottom faces of timber.
Depth of timber section h=300 mm
Width of timber section b=100 mm
Depth of steel section ds=12 mm
Width of steel section bs=100 mm
Length of bearing lb=150 mm
Timber strength class C22.

Section design values

Design bending moment Md=Md'*10^6=32.45E6 Nmm
Design shear force Vd=Vd'*10^3=17307 N
Design axial load (+ve compress) Nd=1.704 kN
Depth factor (Clause 3.2) kh=1.0
Bearing modification factor kc90=1.5
Load-sharing modification factor ksys=1.0
Shear reduction factor ksh=0.67
Effective length about zz Le=6 m
Eff.length for bending about yy ley'=4 m
Eff.length for bending about zz lez'=4 m
Instability factor kcy=1/(ky+(ky^2-rsry^2)^0.5)=0.95085
Instability factor kcz=1/(kz+(kz^2-rsrz^2)^0.5)=0.15852
Percent proportion of load in timber gtar=28 %
Bolt diameter bd=20 mm
No of rows of bolts to be adopted NRC=1
Spacing of bolts along beam space=250 mm

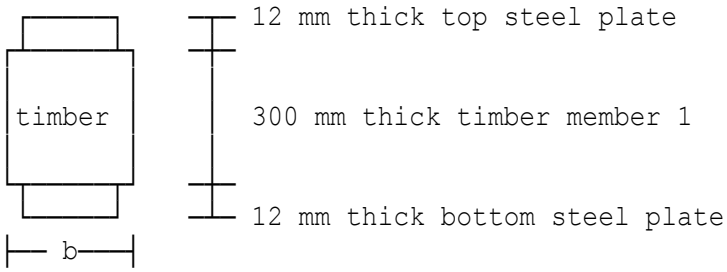

Timber characteristic density pk1=340 kg/m³
Angle between grain and load alp1'=0°

Bolt shear capacities

Basic loads in kN will be derived from the expressions in Section 8 of Eurocode 5.
Char. value of yield moment MyRk=0.3*400*bd^2.6=289640
Char. embedment strength fhok=0.082*(1-0.01*bd)*pk1=22.304

Denominator (expression 8.31)	denom=((K90*SIN(alp1)^2) +COS(alp1)^2)=1
Embedment strength (timber 1)	fh1k=fhok/denom=22.304
Embedment strength (timber 2)	fh2k=22.304
Factor	beta=fh2k/fh1k=1
Min value of equations (a)-(e)	Gmin=22184
Basic bolt shear resistance	basic=Gmin/1000=22.184 kN
Design resistance per bolt	pbl=kmod/gamM2*basic=13.651 kN

	Member: 324 mm x 100 mm overall	
	Modular ratio	**31.343**
DESIGN	**Timber bending stress**	**2.3668 N/mm²**
SUMMARY	**Timber design bending strength**	**13.538 N/mm²**
	Steel design bending stress	**80.119 N/mm²**
	Steel design bending strength	**275 N/mm²**
	Timber moisture class	**1**
	Design compressive stress	**0.015904 N/mm²**
	Design compressive strength	**12.308 N/mm²**
	Timber interaction factor	**0.17618**
	Steel interaction factor	**0.2932**
	Design shear force	**17.307 kN**
	Design Shear resistance	**31.335 kN**
	Design bearing stress	**1.1538 N/mm²**
	Design bearing strength	**2.2154 N/mm²**
	Design load per bolt	**12.344 kN**
	Design bolt resistance	**13.651 kN**

Bolts are 20 mm diameter in 1 row(s) at 250 mm centres.
The end connections are beyond the scope of this proforma.

Location: Flitched timber beam

Fully Restrained flitched beam to EC5 and EC3

Calculations include EC5 National Annex Amendment No.2.
Beam span L=4.8 m
Design BM about yy (positive) Md'=7.3613 kNm
Design shear force in z direction Vd'=6.1344 kN
Design axial load (+ve compress) Nd=-14.484 kN
Section comprises one steel web plate with a timber member on each side.
Depth of timber section h=200 mm
Width of timber section b=50 mm
Depth of steel section ds=190 mm
Width of steel section bs=8 mm
Length of bearing lb=100 mm
Timber strength class C18.

Section design values

Design bending moment Md=Md'*10^6=7.3613E6 Nmm
Design shear force Vd=Vd'*10^3=6134.4 N
Design axial load (+ve compress) Nd=-14.484 kN
Depth factor (Clause 3.2) kh=1.0
Bearing modification factor kc90=1.5
Load-sharing modification factor ksys=1.1
Shear reduction factor ksh=0.67
Tensile area of timber section Tat=19000 mm²
Tensile area of steel section Tas=1500 mm²
Width modification factor kw=(150/lardim)^0.2=0.94409
Width modification factor kw=1.0
Percent proportion of load in timber gtar=25 %

Bolts between timber and steel plate along length of beam

Bolt diameter bd=16 mm
Spacing of bolts along beam space=600 mm
Bolts are in double shear. Width of timber for bolt stress calculation is the section width b bb=50 mm
Angle between grain and load alp1'=90 degrees
Timber characteristic density pk1=320 kg/m³
Basic loads in kN will be derived from the expressions in Section 8 of Eurocode 5.
Char. value of yield moment MyRk=0.3*400*bd^2.6=162141
Char. embedment strength fhok=0.082*(1-0.01*bd)*pk1=22.042
Denominator (expression 8.31) denom=((K90*SIN(alp1)^2)
+COS(alp1)^2)=1.59
Embedment strength (timber 1) fh1k=fhok/denom=13.863
Embedment strength (timber 2) fh2k=13.863
Factor beta=fh2k/fh1k=1

Expressions (f) to (m) for fasteners in double shear refer to section 8.2.3 in EC5. Zero contribution from rope effect will be considered.

Equations	f	g	h
	11090	8654.1	13793

Min value of equations (f)-(h) Gmin=8654.1

Basic bolt shear resistance basic=Gmin/1000=8.6541 kN
Design bolt resistance in timber pbl=2*kmod/gamM2*basic=7.9884 kN

	Member: 200 mm x 108 mm overall	
	Modular ratio	**35**
DESIGN	**Timber bending stress**	**3.247 N/mm²**
SUMMARY	**Timber design bending strength**	**9.1385 N/mm²**
	Steel design bending stress	**107.96 N/mm²**
	Steel design bending strength	**275 N/mm²**
	Timber tensile cross sec area	**19000 mm²**
	Steel tensile cross sec area	**1500 mm²**
	Timber moisture class	**1**
	Design tensile stress	**0.18105 N/mm²**
	Design tensile strength	**5.0769 N/mm²**
	Timber interaction factor	**0.39097**
	Steel interaction factor	**0.41858**
	Design shear force	**6.1344 kN**
	Design Shear resistance	**15.42 kN**
	Design bearing stress	**0.61344 N/mm²**
	Design bearing strength	**1.6754 N/mm²**

Bolts are 16 mm diameter at 600 mm c/c (9 No total).
Edge distance in the steel to be a minimum of 32 mm.
The end connections are beyond the scope of this proforma.

Location: Flitched timber beam

Fully Restrained flitched beam to EC5 and EC3

Calculations include EC5 National Annex Amendment No.2.
Beam span L=4.8 m
Design BM about yy (positive) Md'=7.3613 kNm
Design shear force in z direction Vd'=6.1344 kN
Design axial load (+ve compress) Nd=-14.484 kN
Section comprises one steel web plate with a timber member on each side.
Depth of timber section h=200 mm
Width of timber section b=50 mm
Depth of steel section ds=190 mm
Width of steel section bs=10 mm
Length of bearing lb=100 mm

Bending parallel to the grain fmk=7.5 N/mm²
Compress parallel to the grain fc0k=7.9 N/mm²
Compress perp to the grain fc90k=2.1 N/mm²
Tension parallel to the grain ft0k=4.5 N/mm²
Shear parallel to the grain fvk=1 N/mm²
Mean modulus of elasticity E0mean=10500 N/mm²
5th percentile MOE E005=7000 N/mm²

Section design values

Design bending moment Md=Md'*10^6=7.3613E6 Nmm
Design shear force Vd=Vd'*10^3=6134.4 N
Design axial load (+ve compress) Nd=-14.484 kN
Depth factor (Clause 3.2) kh=1.0
Bearing modification factor kc90=1.5
Load-sharing modification factor ksys=1.1
Shear reduction factor ksh=0.67
Tensile area of timber section Tat=19000 mm²
Tensile area of steel section Tas=1500 mm²
Width modification factor kw=(150/lardim)^0.2=0.94409
Width modification factor kw=1.0
Percent proportion of load in timber gtar=25 %

Bolts between timber and steel plate along length of beam

Bolt diameter bd=16 mm
Spacing of bolts along beam space=600 mm
Bolts are in double shear. Width of timber for bolt stress calculation is the section width b bb=50 mm
Angle between grain and load alp1'=90 degrees
Timber characteristic density pk1=420 kg/m³
Basic loads in kN will be derived from the expressions in Section 8 of Eurocode 5.
Char. value of yield moment MyRk=0.3*400*bd^2.6=162141
Char. embedment strength fhok=0.082*(1-0.01*bd)*pk1=28.93
Denominator (expression 8.31) denom=((K90*SIN(alp1)^2)
+COS(alp1)^2)=1.59

Embedment strength (timber 1) fh1k=fhok/denom=18.195
Embedment strength (timber 2) fh2k=18.195
Factor beta=fh2k/fh1k=1

Expressions (f) to (m) for fasteners in double shear refer to section 8.2.3 in EC5. Zero contribution from rope effect will be considered.

Equations	f	g	h
	14556	10194	15802

Min value of equations (f)-(h) Gmin=10194

Basic bolt shear resistance basic=Gmin/1000=10.194 kN
Design bolt resistance in timber pbl=2*kmod/gamM2*basic=9.4098 kN

DESIGN SUMMARY

Member: 200 mm x 110 mm overall	
Modular ratio	**30**
Timber bending stress	**3.0911 N/mm²**
Timber design bending strength	**3.8077 N/mm²**
Steel design bending stress	**88.098 N/mm²**
Steel design bending strength	**275 N/mm²**
Timber tensile cross sec area	**19000 mm²**
Steel tensile cross sec area	**1500 mm²**
Timber moisture class	**1**
Design tensile stress	**0.18105 N/mm²**
Design tensile strength	**2.2846 N/mm²**
Timber interaction factor	**0.89106**
Steel interaction factor	**0.34115**
Design shear force	**6.1344 kN**
Design Shear resistance	**306.2 kN**
Design bearing stress	**0.61344 N/mm²**
Design bearing strength	**1.5992 N/mm²**

Bolts are 16 mm diameter at 600 mm c/c (9 No total).
Edge distance in the steel to be a minimum of 32 mm.
The end connections are beyond the scope of this proforma.

Location: Flitched timber beam

Fully Restrained flitched beam to EC5 and EC3

Calculations include EC5 National Annex Amendment No.2.

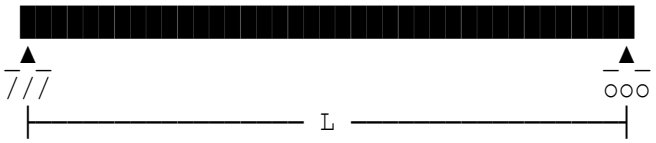

Simply supported beam subject to vertical loads.

Beam span	L=6 m
Dist. from left support to start	Lau(1)=0 m
Distance from left support to end	Lbu(1)=4.8 m
Permanent load (unfactored)	Gku(1)=1.2 kN/m
Variable load 1 (unfactored)	Qua(1)=0.6 kN/m

Characteristic values of actions

Permanent:	
Reaction at left hand end	3.456 kN
Reaction at right hand end	2.304 kN
Maximum span moment	Mkp=4.968 kNm
Maximum shear force	Fkp=3.456 kN
Variable 1:	
Reaction at left hand end	1.728 kN
Reaction at right hand end	1.152 kN
Maximum span moment	Mkv1=2.484 kNm
Maximum shear force	Fkv1=1.728 kN

Design values of combined actions for ULS

Design bending moment	Md'=gamG*Mkp+gamQ*Mkv1=10.433 kNm
Design shear force	Vd'=gamG*Fkp+gamQ*Fkv1=7.2576 kN

Section comprises one steel web plate with a timber member on each side.

Depth of timber section	h=250 mm
Width of timber section	b=75 mm
Depth of steel section	ds=225 mm
Width of steel section	bs=12 mm
Length of bearing	lb=100 mm

Timber strength class D40.

Section design values

Design bending moment	Md=Md'*10^6=10.433E6 Nmm
Design shear force	Vd=Vd'*10^3=7257.6 N
Design axial load (+ve compress)	Nd=0 kN
Depth factor (Clause 3.2)	kh=1.0
Bearing modification factor	kc90=1.0
Load-sharing modification factor	ksys=1.0
Shear reduction factor	ksh=0.67

Bolts between timber and steel plate along length of beam

```
Bolt diameter                      bd=16 mm
Spacing of bolts along beam        space=600 mm
Bolts are in double shear.  Width of timber for bolt stress calculation
is the section width b             bb=75 mm
Angle between grain and load       alp1'=90 degrees
Timber characteristic density      pk1=550 kg/m³
Basic loads in kN will be derived from the expressions in Section 8
of Eurocode 5.
Char. value of yield moment        MyRk=0.3*400*bd^2.6=162141
Char. embedment strength           fhok=0.082*(1-0.01*bd)*pk1=37.884
Denominator (expression 8.31)      denom=((K90*SIN(alp1)^2)
                                         +COS(alp1)^2)=1.14
Embedment strength (timber 1)      fh1k=fhok/denom=33.232
Embedment strength (timber 2)      fh2k=33.232
Factor                             beta=fh2k/fh1k=1
Equations      f        g        h
             39878    19497    21356
Min value of equations (f)-(h)     Gmin=19497

Basic bolt shear resistance        basic=Gmin/1000=19.497 kN
Design bolt resistance in timber   pbl=2*kmod/gamM2*basic=17.997 kN
```

	Member: 250 mm x 162 mm overall	
	Modular ratio	**19.266**
DESIGN	**Timber bending stress**	**3.1442 N/mm²**
SUMMARY	**Timber design bending strength**	**18.462 N/mm²**
	Steel design bending stress	**54.519 N/mm²**
	Steel design bending strength	**275 N/mm²**
	Final deflection	**8.3954 mm**
	Limiting deflection	**24 mm**
	Design shear force	**7.2576 kN**
	Design Shear resistance	**32.469 kN**
	Design bearing stress	**0.48384 N/mm²**
	Design bearing strength	**2.5385 N/mm²**

Bolts are 16 mm diameter at 600 mm c/c (11 No total).
Edge distance in the steel to be a minimum of 32 mm.
Bolts along the beam to be staggered above and below the centre line with their centres offset from the beam centre line to suit the min bolt edge spacing of 64 mm.
The minimum No of bolts required at the bearing = 2

Location: Flitched timber beam

Fully Restrained flitched beam to EC5 and EC3

Calculations include EC5 National Annex Amendment No.2.
Beam span L=5.5 m
Design BM about yy (positive) Md'=13.038 kNm
Design shear force in z direction Vd'=9.4822 kN
Design axial load (+ve compress) Nd=0 kN
Section comprises one steel web plate with a timber member on each side.
Depth of timber section h=225 mm
Width of timber section b=50 mm
Depth of steel section ds=175 mm
Width of steel section bs=10 mm
Length of bearing lb=50 mm
Timber strength class C16.

Section design values

Design bending moment Md=Md'*10^6=13.038E6 Nmm
Design shear force Vd=Vd'*10^3=9482.2 N
Design axial load (+ve compress) Nd=0 kN
Depth factor (Clause 3.2) kh=1.0
Bearing modification factor kc90=1.5
Load-sharing modification factor ksys=1.0
Shear reduction factor ksh=0.67

Bolts between timber and steel plate along length of beam

Bolt diameter bd=16 mm
Spacing of bolts along beam space=450 mm
Bolts are in double shear. Width of timber for bolt stress calculation is the section width b bb=50 mm
Angle between grain and load alp1'=90 degrees
Timber characteristic density pk1=310 kg/m³
Basic loads in kN will be derived from the expressions in Section 8 of Eurocode 5.
Char. value of yield moment MyRk=0.3*400*bd^2.6=162141
Char. embedment strength fhok=0.082*(1-0.01*bd)*pk1=21.353
Denominator (expression 8.31) denom=((K90*SIN(alp1)^2)
+COS(alp1)^2)=1.59
Embedment strength (timber 1) fh1k=fhok/denom=13.429
Embedment strength (timber 2) fh2k=13.429
Factor beta=fh2k/fh1k=1

Equations	f	g	h
	10744	8497.2	13576

Min value of equations (f)-(h) Gmin=8497.2

Basic bolt shear resistance basic=Gmin/1000=8.4972 kN

Design bolt resistance in timber pbl=2*kmod/gamM2*basic=10.458 kN

	Member: 225 mm x 110 mm overall	
	Modular ratio	**38.889**
DESIGN	**Timber bending stress**	**5.4607 N/mm²**
SUMMARY	**Timber design bending strength**	**9.8462 N/mm²**
	Steel design bending stress	**165.17 N/mm²**
	Steel design bending strength	**275 N/mm²**
	Timber moisture class	**2**
	Design shear force	**9.4822 kN**
	Design Shear resistance	**19.791 kN**
	Design bearing stress	**1.8964 N/mm²**
	Design bearing strength	**2.0308 N/mm²**

Bolts are 16 mm diameter at 450 mm c/c (13 No total).
Edge distance in the steel to be a minimum of 32 mm.
The end connections are beyond the scope of this proforma.

Location: Flitched timber beam

Fully Restrained flitched beam to EC5 and EC3

Calculations include EC5 National Annex Amendment No.2.
Beam span L=5.5 m
Design BM about yy (positive) Md'=13.038 kNm
Design shear force in z direction Vd'=17.04 kN
Design axial load (+ve compress) Nd=7.1 kN
Section comprises one steel web plate with a timber member on each side.
Depth of timber section h=225 mm
Width of timber section b=50 mm
Depth of steel section ds=175 mm
Width of steel section bs=10 mm
Length of bearing lb=50 mm
Timber strength class C16.

Section design values

Design bending moment Md=Md'*10^6=13.038E6 Nmm
Design shear force Vd=Vd'*10^3=17040 N
Design axial load (+ve compress) Nd=7.1 kN
Depth factor (Clause 3.2) kh=1.0
Bearing modification factor kc90=1.5
Load-sharing modification factor ksys=1.0
Shear reduction factor ksh=0.67
Eff.length for bending about yy ley'=5.5 m
Eff.length for bending about zz lez'=1.5 m
Instability factor kcy=1/(ky+(ky^2-rsry^2)^0.5)=0.27274
Instability factor kcz=1/(kz+(kz^2-rsrz^2)^0.5)=0.34002
Percent proportion of load in timber gtar=32 %

Bolts between timber and steel plate along length of beam

Bolt diameter bd=16 mm
Spacing of bolts along beam space=450 mm
Bolts are in double shear. Width of timber for bolt stress calculation is the section width b bb=50 mm
Angle between grain and load alp1'=90 degrees
Timber characteristic density pk1=310 kg/m³
Basic loads in kN will be derived from the expressions in Section 8 of Eurocode 5.
Char. value of yield moment MyRk=0.3*400*bd^2.6=162141
Char. embedment strength fhok=0.082*(1-0.01*bd)*pk1=21.353
Denominator (expression 8.31) denom=((K90*SIN(alp1)^2)
+COS(alp1)^2)=1.59
Embedment strength (timber 1) fh1k=fhok/denom=13.429
Embedment strength (timber 2) fh2k=13.429
Factor beta=fh2k/fh1k=1

Equations	f	g	h
	10744	8497.2	13576

Min value of equations (f)-(h) Gmin=8497.2

Basic bolt shear resistance basic=Gmin/1000=8.4972 kN

Design bolt resistance in timber pbl=2*kmod/gamM2*basic=10.458 kN

	Member: 225 mm x 110 mm overall	
	Modular ratio	**38.889**
DESIGN	**Timber bending stress**	**5.4607 N/mm²**
SUMMARY	**Timber design bending strength**	**9.8462 N/mm²**
	Steel design bending stress	**165.17 N/mm²**
	Steel design bending strength	**275 N/mm²**
	Timber moisture class	**2**
	Design compressive stress	**0.10098 N/mm²**
	Design compressive strength	**10.462 N/mm²**
	Timber interaction factor	**0.58999**
	Steel interaction factor	**0.61065**
	Design shear force	**17.04 kN**
	Design Shear resistance	**19.791 kN**
	Design bearing stress	**34.08 N/mm²**
	Design bearing strength	**265 N/mm²**
	Plt buckling @ supp.	**12.393 N/mm²**
	Design buckling strength	**243.76 N/mm²**

Bolts are 16 mm diameter at 450 mm c/c (13 No total).
Edge distance in the steel to be a minimum of 32 mm.
The end connections are beyond the scope of this proforma.

Location: Flitched timber beam with udl & point loads

Fully Restrained flitched beam to EC5 and EC3

Calculations include EC5 National Annex Amendment No.2.

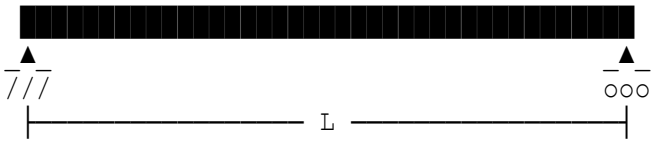

Simply supported beam subject to vertical loads.

Beam span	L=4.8 m
Dist. from left support to start	Lau(1)=0 m
Distance from left support to end	Lbu(1)=4.8 m
Permanent load (unfactored)	Gku(1)=1.2 kN/m
Variable load 1 (unfactored)	Qua(1)=0.6 kN/m
Variable load 2 (unfactored)	Qub(1)=0.5 kN/m

Characteristic values of actions

Permanent:	
Reaction at left hand end	2.88 kN
Reaction at right hand end	2.88 kN
Maximum span moment	Mkp=3.456 kNm
Maximum shear force	Fkp=2.88 kN
Variable 1:	
Reaction at left hand end	1.44 kN
Reaction at right hand end	1.44 kN
Maximum span moment	Mkv1=1.728 kNm
Maximum shear force	Fkv1=1.44 kN
Variable 2:	
Reaction at left hand end	1.2 kN
Reaction at right hand end	1.2 kN
Maximum span moment	Mkv2=1.44 kNm
Maximum shear force	Fkv2=1.2 kN

Design values of combined actions for ULS

Design moment	Md1=gamG*Mkp+gamQ*Mkv1=7.2576 kNm
Design shear force	Vd1=gamG*Fkp+gamQ*Fkv1=6.048 kN

Design values - combination 1

Design bending moment	Md'=7.2576 kNm
Design shear force	Vd'=6.048 kN
Load duration factor	kmod=0.8

Section comprises one steel web plate with a timber member on each side.

Depth of timber section h=200 mm
Width of timber section b=50 mm
Depth of steel section ds=190 mm
Width of steel section bs=8 mm
Length of bearing lb=100 mm
Timber strength class C18.
Modulus of elasticity of steel Est=200000 N/mm²

Section design values

Design bending moment Md=Md'*10^6=7.2576E6 Nmm
Design shear force Vd=Vd'*10^3=6048 N
Design axial load (+ve compress) Nd=0 kN
Depth factor (Clause 3.2) kh=1.0
Bearing modification factor kc90=1.5
Load-sharing modification factor ksys=1.1
Shear reduction factor ksh=0.67
Effective length about zz Le=3.84 m

Bolts between timber and steel plate along length of beam

Bolt diameter bd=16 mm
Spacing of bolts along beam space=500 mm
Bolts are in double shear. Width of timber for bolt stress calculation is the section width b bb=50 mm
Angle between grain and load alp1'=90 degrees
Timber characteristic density pk1=320 kg/m³
Basic loads in kN will be derived from the expressions in Section 8 of Eurocode 5.
Char. value of yield moment MyRk=0.3*400*bd^2.6=162141
Char. embedment strength fhok=0.082*(1-0.01*bd)*pk1=22.042
Denominator (expression 8.31) denom=((K90*SIN(alp1)^2)
+COS(alp1)^2)=1.59
Embedment strength (timber 1) fh1k=fhok/denom=13.863
Embedment strength (timber 2) fh2k=13.863
Factor beta=fh2k/fh1k=1

Expressions (f) to (m) for fasteners in double shear refer to section 8.2.3 in EC5. Zero contribution from rope effect will be considered.

Equations	f	g	h
	11090	8654.1	13793

Min value of equations (f)-(h) Gmin=8654.1

Basic bolt shear resistance basic=Gmin/1000=8.6541 kN

Design bolt resistance in timber pbl=2*kmod/gamM2*basic=8.3079 kN

	Member: 200 mm x 108 mm overall	
	Modular ratio	**33.333**
DESIGN	**Timber bending stress**	**3.3126 N/mm²**
SUMMARY	**Timber design bending strength**	**6.806 N/mm²**
	Steel design bending stress	**104.9 N/mm²**
	Steel design bending strength	**200 N/mm²**
	Final deflection	**12.797 mm**
	Limiting deflection	**19.2 mm**
	Design shear force	**6.048 kN**
	Design Shear resistance	**15.42 kN**
	Design bearing stress	**0.6048 N/mm²**
	Design bearing strength	**1.6754 N/mm²**

Bolts are 16 mm diameter at 500 mm c/c (10 No total).
Edge distance in the steel to be a minimum of 32 mm.
Bolts along the beam to be staggered above and below the centre line with their centres offset from the beam centre line to suit the min bolt edge spacing of 64 mm.
The minimum No of bolts required at the bearing = 2
NOTE: The above values relate to combination 1 and need to be compared with those of combination 2.

Location: Flitched timber beam

Fully Restrained flitched beam to EC5 and EC3

Calculations include EC5 National Annex Amendment No.2.

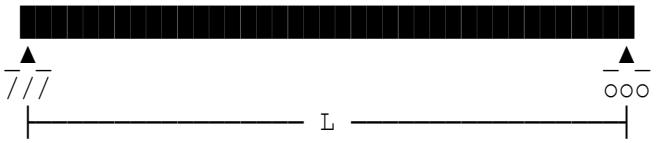

Simply supported beam subject to vertical loads.

Beam span	L=4 m
Distance from left support	Lc(1)=3 m
Permanent load (unfactored)	Gkc(1)=15.75 kN
Variable load 1 (unfactored)	Qca(1)=78.438 kN
Dist. from left support to start	Lau(1)=0 m
Distance from left support to end	Lbu(1)=4 m
Permanent load (unfactored)	Gku(1)=0.96 kN/m
Variable load 1 (unfactored)	Qua(1)=0 kN/m

Characteristic values of actions

Permanent:	
Reaction at left hand end	5.8575 kN
Reaction at right hand end	13.733 kN
Maximum span moment	Mkp=13.253 kNm
Maximum shear force	Fkp=13.733 kN
Variable 1:	
Reaction at left hand end	19.61 kN
Reaction at right hand end	58.829 kN
Maximum span moment	Mkv1=58.829 kNm
Maximum shear force	Fkv1=58.829 kN

Design values of combined actions for ULS

Design bending moment	Md'=gamG*Mkp+gamQ*Mkv1=106.14 kNm
Design shear force	Vd'=gamG*Fkp+gamQ*Fkv1=106.78 kN

Section comprises two steel web plates and 3 timber members.

Depth of timber section	h=400 mm
Width of timber section	b=125 mm
Depth of steel section	ds=375 mm
Width of steel section	bs=16 mm
Length of bearing	lb=150 mm

Bending parallel to the grain	fmk=7.5 N/mm²
Compress parallel to the grain	fc0k=7.9 N/mm²
Compress perp to the grain	fc90k=2.1 N/mm²
Tension parallel to the grain	ft0k=4.5 N/mm²
Shear parallel to the grain	fvk=1 N/mm²
Mean modulus of elasticity	E0mean=10500 N/mm²
5th percentile MOE	E005=7000 N/mm²

Section design values

Design bending moment	Md=Md'*10^6=106.14E6 Nmm
Design shear force	Vd=Vd'*10^3=106783 N
Design axial load (+ve compress)	Nd=0 kN
Depth factor (Clause 3.2)	kh=1.0
Bearing modification factor	kc90=1.5
Load-sharing modification factor	ksys=1.0
Shear reduction factor	ksh=0.67

Bolts between timber and steel plate along length of beam

Bolt diameter	bd=16 mm
Spacing of bolts along beam	space=600 mm
Bolts are in double shear. Width of timber for bolt stress calculation is the section width b	bb=125 mm
Angle between grain and load	alp1'=90 degrees
Timber characteristic density	pk1=320 kg/m³
Basic loads in kN will be derived from the expressions in Section 8 of Eurocode 5.	
Char. value of yield moment	MyRk=0.3*400*bd^2.6=162141
Char. embedment strength	fhok=0.082*(1-0.01*bd)*pk1=22.042
Denominator (expression 8.31)	denom=((K90*SIN(alp1)^2) +COS(alp1)^2)=1.59
Embedment strength (timber 1)	fh1k=fhok/denom=13.863
Embedment strength (timber 2)	fh2k=13.863
Factor	beta=fh2k/fh1k=1
Expressions (a) to (e) for fasteners in single shear refer to section 8.2.3 in EC5. Zero contribution from rope effect will be considered.	
Min value of equations (a)-(e)	Gmin=13278
Basic bolt shear resistance	basic=Gmin/1000=13.278 kN
Design bolt resistance in timber	pbl=4*kmod/gamM2*basic=32.683 kN

	Member: 400 mm x 407 mm overall	
	Modular ratio	**30**
DESIGN	**Timber bending stress**	**3.4134 N/mm²**
SUMMARY	**Timber design bending strength**	**4.6154 N/mm²**
	Steel design bending stress	**96.002 N/mm²**
	Steel design bending strength	**275 N/mm²**
	Final deflection	**5.9493 mm**
	Limiting deflection	**16 mm**
	Design shear force	**106.78 kN**
	Design Shear resistance	**1946.5 kN**
	Design bearing stress	**1.8984 N/mm²**
	Design bearing strength	**1.9385 N/mm²**

Bolts are 16 mm diameter at 600 mm c/c (7 No total).
Edge distance in the steel to be a minimum of 32 mm.
Bolts along the beam to be staggered above and below the centre line with their centres offset from the beam centre line to suit the min bolt edge spacing of 64 mm.
The minimum No of bolts required at the bearing = 3

Location: Flitched timber beam with udl & point loads

Fully Restrained flitched beam to EC5 and EC3

Calculations include EC5 National Annex Amendment No.2.
Beam span L=2.7139 m
Design BM about yy (positive) Md'=9.5135 kNm
Design shear force in z direction Vd'=-20 kN
Design axial load (+ve compress) Nd=19.274 kN
Section comprises steel plates to each side face of timber section.
Depth of timber section h=158 mm
Width of timber section b=100 mm
Depth of steel section ds=79 mm
Width of steel section bs=52 mm
Length of bearing lb=10 mm

Bending parallel to the grain fmk=14 N/mm²
Compress parallel to the grain fc0k=16 N/mm²
Compress perp to the grain fc90k=9.9576 N/mm²
Tension parallel to the grain ft0k=14 N/mm²
Shear parallel to the grain fvk=3 N/mm²
Mean modulus of elasticity E0mean=18538 N/mm²
5th percentile MOE E005=11123 N/mm²
Modulus of elasticity of steel Est=200000 N/mm²

Section design values

Design bending moment Md=Md'*10^6=9.5135E6 Nmm
Design shear force Vd=Vd'*10^3=20000 N
Design axial load (+ve compress) Nd=19.274 kN
Depth factor (Clause 3.2) kh=1.0
Bearing modification factor kc90=1.5
Load-sharing modification factor ksys=1.0
Shear reduction factor ksh=0.67
Effective length about zz Le=2.1711 m
Eff.length for bending about yy ley'=2.7 m
Eff.length for bending about zz lez'=0.5 m
Instability factor kcy=1/(ky+(ky^2-rsry^2)^0.5)=0.50694
Instability factor kcz=1/(kz+(kz^2-rsrz^2)^0.5)=1.0461
Max instability factor kcz=1
Percent proportion of load in timber gtar=30 %

Bolts between timber and steel plate along length of beam

Bolt diameter bd=20 mm
Spacing of bolts along beam space=300 mm
Bolts are in double shear. Width of timber for bolt stress calculation is the section width b bb=100 mm
Angle between grain and load alp1'=90 degrees
Timber characteristic density pk1=344 kg/m³
Basic loads in kN will be derived from the expressions in Section 8 of Eurocode 5.
Char. value of yield moment MyRk=0.3*400*bd^2.6=289640

```
Char. embedment strength          fhok=0.082*(1-0.01*bd)*pk1=22.566
Denominator (expression 8.31)     denom=((K90*SIN(alp1)^2)
                                        +COS(alp1)^2)=1.2
Embedment strength (timber 1)     fh1k=fhok/denom=18.805
Embedment strength (timber 2)     fh2k=18.805
Factor                            beta=fh2k/fh1k=1
Equations      l        m
             18805    24006
Min value of equations (l)-(m)    Gmin=18805

Basic bolt shear resistance       basic=Gmin/1000=18.805 kN
Design bolt resistance in timber  pbl=2*kmod/gamM2*basic=21.062 kN
```

	Member: 158 mm x 204 mm overall	
	Modular ratio	**17.981**
DESIGN	**Timber bending stress**	**6.851 N/mm²**
SUMMARY	**Timber design bending strength**	**7.5385 N/mm²**
	Steel design bending stress	**61.593 N/mm²**
	Steel design bending strength	**181.82 N/mm²**
	Timber moisture class	**2**
	Design compressive stress	**0.36596 N/mm²**
	Design compressive strength	**8.6154 N/mm²**
	Timber interaction factor	**0.9926**
	Steel interaction factor	**0.3478**
	Design shear force	**20 kN**
	Design Shear resistance	**873.86 kN**
	Design bearing stress	**19.231 N/mm²**
	Design bearing strength	**245 N/mm²**
	Plt buckling @ supp.	**3.885 N/mm²**
	Design buckling strength	**200 N/mm²**

Bolts are 20 mm diameter at 300 mm c/c (10 No total).
Edge distance in the steel to be a minimum of 40 mm.
The end connections are beyond the scope of this proforma.

Location: Flitched timber beam with udl & point loads

Fully Restrained flitched beam to EC5 and EC3

Calculations include EC5 National Annex Amendment No.2.
Beam span L=2.7139 m
Design BM about yy (positive) Md'=9.5135 kNm
Design shear force in z direction Vd'=-20 kN
Design axial load (+ve compress) Nd=19.274 kN
Section comprises steel plates to each side face of timber section.
Depth of timber section h=158 mm
Width of timber section b=100 mm
Depth of steel section ds=79 mm
Width of steel section bs=52 mm
Length of bearing lb=10 mm

Bending parallel to the grain fmk=14 N/mm²
Compress parallel to the grain fc0k=16 N/mm²
Compress perp to the grain fc90k=9.9576 N/mm²
Tension parallel to the grain ft0k=14 N/mm²
Shear parallel to the grain fvk=3 N/mm²
Mean modulus of elasticity E0mean=18538 N/mm²
5th percentile MOE E005=11123 N/mm²
Modulus of elasticity of steel Est=200000 N/mm²

Section design values

Design bending moment Md=Md'*10^6=9.5135E6 Nmm
Design shear force Vd=Vd'*10^3=20000 N
Design axial load (+ve compress) Nd=19.274 kN
Depth factor (Clause 3.2) kh=1.0
Bearing modification factor kc90=1.5
Load-sharing modification factor ksys=1.0
Shear reduction factor ksh=0.67
Effective length about zz Le=2.1711 m
Eff.length for bending about yy ley'=2.7139 m
Eff.length for bending about zz lez'=0.5 m
Instability factor kcy=1/(ky+(ky^2-rsry^2)^0.5)=0.50291
Instability factor kcz=1/(kz+(kz^2-rsrz^2)^0.5)=1.0461
Max instability factor kcz=1
Percent proportion of load in timber gtar=30 %

Bolts between timber and steel plate along length of beam

Bolt diameter bd=20 mm
Spacing of bolts along beam space=140 mm
Bolts are in double shear. Width of timber for bolt stress calculation is the section width b bb=100 mm
Angle between grain and load alp1'=90 degrees
Timber characteristic density pk1=344 kg/m³
Basic loads in kN will be derived from the expressions in Section 8 of Eurocode 5.
Char. value of yield moment MyRk=0.3*400*bd^2.6=289640

```
Char. embedment strength          fhok=0.082*(1-0.01*bd)*pk1=22.566
Denominator (expression 8.31)     denom=((K90*SIN(alp1)^2)
                                        +COS(alp1)^2)=1.2
Embedment strength (timber 1)     fh1k=fhok/denom=18.805
Embedment strength (timber 2)     fh2k=18.805
Factor                            beta=fh2k/fh1k=1
Equations      l        m
             18805    24006
Min value of equations (l)-(m)    Gmin=18805

Basic bolt shear resistance       basic=Gmin/1000=18.805 kN
Design bolt resistance in timber  pbl=2*kmod/gamM2*basic=21.062 kN
```

	Member: 158 mm x 204 mm overall	
	Modular ratio	**17.981**
DESIGN	**Timber bending stress**	**6.851 N/mm²**
SUMMARY	**Timber design bending strength**	**7.5385 N/mm²**
	Steel design bending stress	**61.593 N/mm²**
	Steel design bending strength	**181.82 N/mm²**
	Timber moisture class	**2**
	Design compressive stress	**0.36596 N/mm²**
	Design compressive strength	**8.6154 N/mm²**
	Timber interaction factor	**0.99328**
	Steel interaction factor	**0.3478**
	Design shear force	**20 kN**
	Design Shear resistance	**873.86 kN**
	Design bearing stress	**19.231 N/mm²**
	Design bearing strength	**245 N/mm²**
	Plt buckling @ supp.	**3.885 N/mm²**
	Design buckling strength	**200 N/mm²**

Bolts are 20 mm diameter at 140 mm c/c (20 No total).
Edge distance in the steel to be a minimum of 40 mm.
The end connections are beyond the scope of this proforma.

Location: Spaced rectangular section with axial load and bending

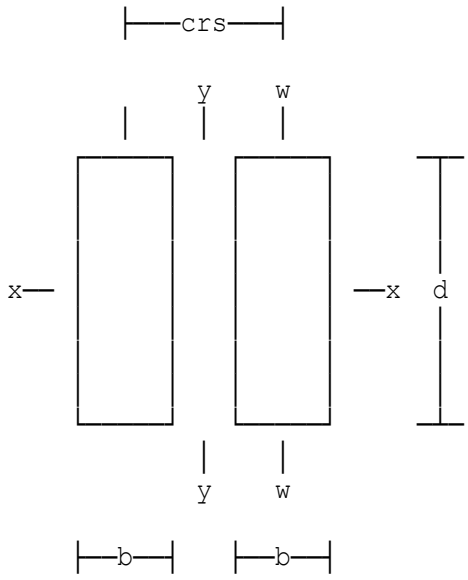

Rectangular timber member composed of two or more equal shafts spaced apart by end and intermediate packing pieces. Member subject to axial load and bending about x-x.

Calculations to BS5268-2:2002.

Design BM about xx (positive)	Mx'=0.2953 kNm
Design shear force in y direction	V'=0 kN
Design axial load (+ve compress)	F'=4.9 kN
Eff.length for bending about xx	Lex=3500 mm
Eff.length for bending about yy	Ley=3500 mm
Depth of section	d=175 mm
Width of section	b=75 mm
Number of shafts	nos=2
Distance between Crs of shafts	crs=200 mm
Strength class C22 to Table 8.	
Actual length of the column	coll=3500 mm
Intermediate pack centres	ipcrs=900 mm
Timber service class adopted	tmclass=1
Timber service class modification	factor K2=1 as Table 16.
Duration of loading	K3=1.25
Depth factor	K7=(300/d)^0.11=1.0611
Load-sharing modification factor	K8=1.0

Modification factor K12=(0.5+(1+eta)*C/2)-((0.5+(1+eta)*C/2)^2 -C)^0.5=0.54924
Actual length of end pack epl=450 mm
Actual length intermediate pack ipl=250 mm

DESIGN SUMMARY

Depth of section	**175 mm**
Width of section	**75 mm**
Strength class C22 to Table 8.	
Number of shafts	**2**
Timber moisture class	**1**
Applied comprn stress	**0.18667 N/mm²**
Permiss comprn stress	**5.1492 N/mm²**
Applied bending stress	**0.3857 N/mm²**
Permiss bending stress	**9.0192 N/mm²**
Interaction factor	**0.079514**
End pack shear force	**1.1944 kN**
End Pack min length	**450 mm**
Chosen end pack length	**450 mm**
Perm glue line stress	**0.71 N/mm²**
Actual glue line stress	**0.015167 N/mm²**
Intermed pack SF	**0.59719 kN**
Min Intermed pack length	**230 mm**
Chosen pack ctrs	**900 mm**
Perm max crs of packs for buckling to cl 2.11.9.2	**1515.5 mm**
Chosen int pack length	**250 mm**
Perm glue line stress	**0.71 N/mm²**
Actual glue line stress	**0.01365 N/mm²**

Location: Spaced rectangular section with axial load and bending

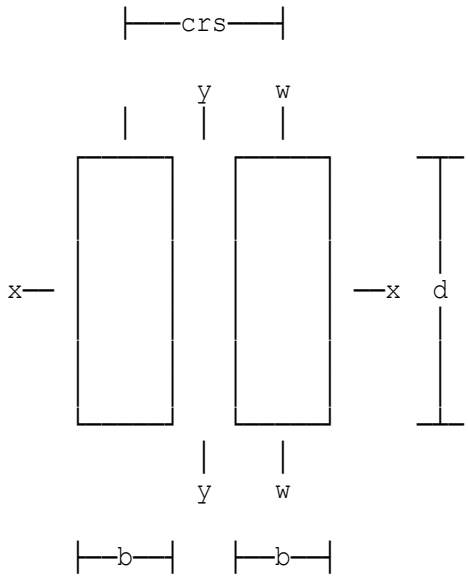

Rectangular timber member composed of two or more equal shafts spaced apart by end and intermediate packing pieces. Member subject to axial load and bending about x-x. Calculations to BS5268-2:2002.

Design BM about xx (positive)	Mx'=0 kNm
Design shear force in y direction	V'=2.5 kN
Design axial load (+ve compress)	F'=20 kN
Eff.length for bending about xx	Lex=4000 mm
Eff.length for bending about yy	Ley=4000 mm
Depth of section	d=120 mm
Width of section	b=35 mm
Number of shafts	nos=2
Distance between Crs of shafts	crs=105 mm
Strength class C24 to Table 8.	
Actual length of the column	coll=4000 mm
Intermediate pack centres	ipcrs=600 mm
Timber service class adopted	tmclass=1
Timber service class modification	factor K2=1 as Table 16.
Duration of loading	K3=1
Load-sharing modification factor	K8=1.0

Modification factor K12=(0.5+(1+eta)*C/2)-((0.5+(1+eta)*C/2)^2 -C)^0.5=0.32483
Actual length of end pack epl=400 mm
Actual length intermediate pack ipl=230 mm

DESIGN SUMMARY

Depth of section	**120 mm**
Width of section	**35 mm**
Strength class C24 to Table 8.	
Number of shafts	**2**
Timber moisture class	**1**
Applied comprn stress	**2.381 N/mm²**
Permiss comprn stress	**2.5661 N/mm²**
Applied shear stress	**0.44643 N/mm²**
Permiss shear stress	**0.71 N/mm²**
End pack shear force	**4.3333 kN**
End Pack min length	**210 mm**
Chosen end pack length	**400 mm**
Perm glue line stress	**0.71 N/mm²**
Actual glue line stress	**0.090278 N/mm²**
Intermed pack SF	**2.1667 kN**
Min Intermed pack length	**230 mm**
Chosen pack ctrs	**600 mm**
Perm max crs of packs for buckling to cl 2.11.9.2	**707.25 mm**
Chosen int pack length	**230 mm**
Perm glue line stress	**0.71 N/mm²**
Actual glue line stress	**0.078502 N/mm²**

Location: Spaced rectangular section with axial load and bending

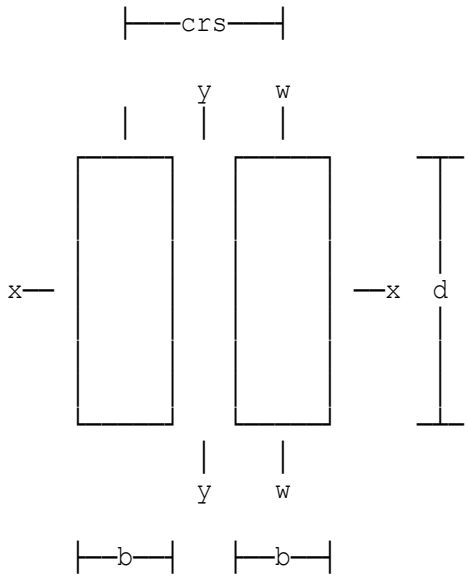

Rectangular timber member composed of two or more equal shafts spaced apart by end and intermediate packing pieces. Member subject to axial load and bending about x-x.

Calculations to BS5268-2:2002.

Design BM about xx (positive)	Mx'=0 kNm
Design shear force in y direction	V'=3.6 kN
Design axial load (+ve compress)	F'=30 kN
Eff.length for bending about xx	Lex=3000 mm
Eff.length for bending about yy	Ley=3000 mm
Depth of section	d=120 mm
Width of section	b=35 mm
Number of shafts	nos=3
Distance between Crs of shafts	crs=105 mm
Strength class C22 to Table 8.	
Actual length of the column	coll=3000 mm
Intermediate pack centres	ipcrs=550 mm
Timber service class adopted	tmclass=1
Timber service class modification	factor K2=1 as Table 16.
Duration of loading	K3=1.25
Load-sharing modification factor	K8=1.0

Modification factor K12=(0.5+(1+eta)*C/2)-((0.5+(1+eta)*C/2)^2 -C)^0.5=0.41861

DESIGN SUMMARY

Depth of section	**120 mm**
Width of section	**35 mm**
Strength class C22 to Table 8.	
Number of shafts	**3**
Timber moisture class	**1**
Applied comprn stress	**2.381 N/mm²**
Permiss comprn stress	**3.9245 N/mm²**
Applied shear stress	**0.42857 N/mm²**
Permiss shear stress	**0.8875 N/mm²**
End pack shear force	**4.3333 kN**
End Pack min length	**210 mm**
Intermed pack SF	**2.1667 kN**
Min Intermed pack length	**230 mm**
Chosen pack ctrs	**550 mm**
Perm max crs of packs for buckling to cl 2.11.9.2	**707.25 mm**

Location: Spaced rectangular section with axial load and bending

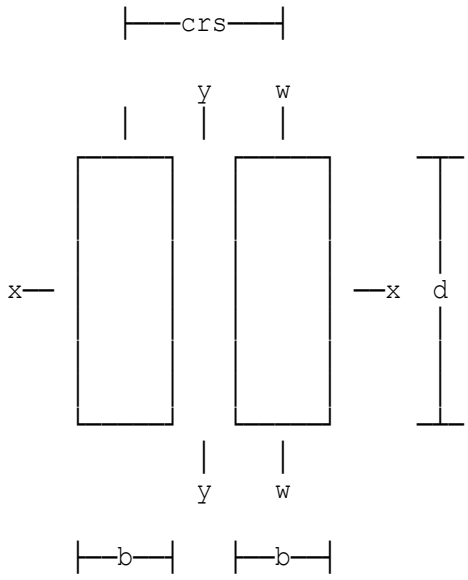

Rectangular timber member composed of two or more equal shafts spaced apart by end and intermediate packing pieces. Member subject to axial load and bending about x-x.

Calculations to BS5268-2:2002.

Design BM about xx (positive)	Mx'=0 kNm
Design shear force in y direction	V'=4.8 kN
Design axial load (+ve compress)	F'=40 kN
Eff.length for bending about xx	Lex=3000 mm
Eff.length for bending about yy	Ley=3000 mm
Depth of section	d=100 mm
Width of section	b=50 mm
Number of shafts	nos=4
Distance between Crs of shafts	crs=105 mm
Strength class TR20 to Table 9.	
Actual length of the column	coll=3000 mm
Intermediate pack centres	ipcrs=750 mm
Timber service class adopted	tmclass=1
Timber service class modification	factor K2=1 as Table 16.
Duration of loading	K3=1.25
Load-sharing modification factor	K8=1.0

Modification factor K12=(0.5+(1+eta)*C/2)-((0.5+(1+eta)*C/2)^2 -C)^0.5=0.30798

DESIGN SUMMARY

Depth of section	**100 mm**
Width of section	**50 mm**
Strength class TR20 to Table 9.	
Number of shafts	**4**
Timber moisture class	**1**
Applied comprn stress	**2 N/mm²**
Permiss comprn stress	**2.8103 N/mm²**
Applied shear stress	**0.36 N/mm²**
Permiss shear stress	**1.025 N/mm²**
End pack shear force	**6.1905 kN**
End Pack min length	**300 mm**
Intermed pack SF	**3.0952 kN**
Min Intermed pack length	**230 mm**
Chosen pack ctrs	**750 mm**
Perm max crs of packs for buckling to cl 2.11.9.2	**1010.4 mm**

Location: Spaced rectangular section with axial load and bending

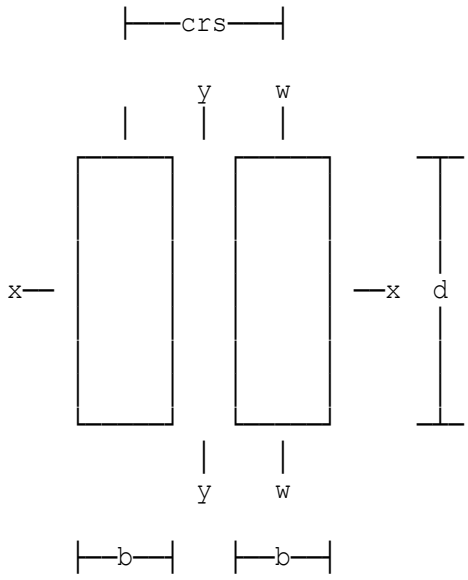

Rectangular timber member composed of two or more equal shafts spaced apart by end and intermediate packing pieces. Member subject to axial load and bending about x-x.

Calculations to BS5268-2:2002.

Design BM about xx (positive)	Mx'=1.3 kNm
Design shear force in y direction	V'=2.5 kN
Design axial load (+ve compress)	F'=15.2 kN
Eff.length for bending about xx	Lex=3000 mm
Eff.length for bending about yy	Ley=3000 mm
Depth of section	d=119 mm
Width of section	b=63 mm
Number of shafts	nos=2
Distance between Crs of shafts	crs=100 mm

Bending parallel to the grain	bparg=7.5 N/mm²
Compress parallel to the grain	cparg=7.9 N/mm²
Compress perpendicular to the grain	cperd=2.1 N/mm²
Tension parallel to the grain	tparg=4.5 N/mm²
Shear parallel to the grain	sparg=0.82 N/mm²
Mean modulus of elasticity	Emean=10000 N/mm²
Minimum modulus of elasticity	Emin=7000 N/mm²
Actual length of the column	coll=3000 mm
Intermediate pack centres	ipcrs=600 mm
Timber service class adopted	tmclass=1
Timber service class modification	factor K2=1 as Table 16.
Duration of loading	K3=1.25
Depth factor	K7=(300/d)^0.11=1.1071
Load-sharing modification factor	K8=1.0

Modification factor K12=(0.5+(1+eta)*C/2)-((0.5+(1+eta)*C/2)^2 -C)^0.5=0.23023

DESIGN SUMMARY

Depth of section	**119 mm**
Width of section	**63 mm**
Number of shafts	**2**
Timber moisture class	**1**
Applied comprn stress	**1.0137 N/mm²**
Permiss comprn stress	**2.2735 N/mm²**
Applied bending stress	**4.3715 N/mm²**
Permiss bending stress	**10.379 N/mm²**
Interaction factor	**0.90522**
Applied shear stress	**0.2501 N/mm²**
Permiss shear stress	**1.025 N/mm²**
End pack shear force	**6.2244 kN**
End Pack min length	**378 mm**
Intermed pack SF	**3.1122 kN**
Min Intermed pack length	**230 mm**
Chosen pack ctrs	**600 mm**
Perm max crs of packs for buckling to cl 2.11.9.2	**1273.1 mm**

Location: Spaced rectangular section with axial load and bending

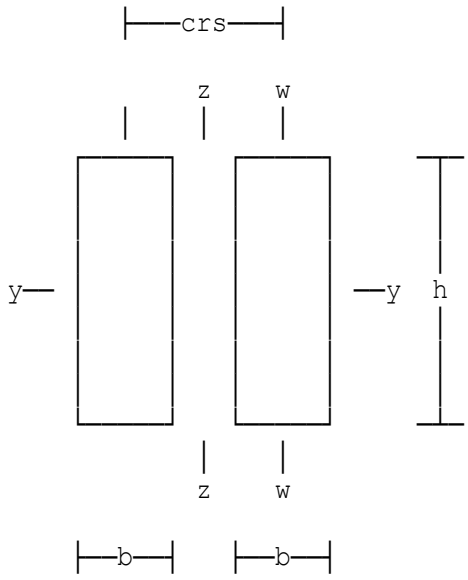

Rectangular timber member composed of two or more equal shafts spaced apart by end and intermediate packing pieces. Member subject to axial load and bending about y-y. Calculations to EC5 incorporating National Annex Amendment No.2.

Design BM about yy (positive)	Md'=0.41933 kNm
Design shear force in z direction	Vdz'=0 kN
Design axial load (+ve compress)	Nd'=6.958 kN
Eff.length for bending about yy	Ley=3500 mm
Eff.length for bending about zz	Lez=3500 mm
Depth of section	h=175 mm
Width of section	b=75 mm
Number of shafts	nos=2
Distance between Crs of shafts	crs=200 mm
Timber strength class C22.	
Actual length of the column	coll=3500 mm
Intermediate pack centres	ipcrs=900 mm
Depth factor (Clause 3.2)	kh=1.0
Load-sharing modification factor	ksys=1.0
Factor η from Table C.1	eta=1
Max instability factor	kcy=1
Instability factor	kcz=1/(kz+(kz^2-rsrz^2)^0.5)=0.73604
Shear reduction factor	ksh=0.67
Effective length about zz	Le=2.8 m

Packs for spaced columns

Fixings are required to transfer a shear force between the abutting face of the packing and one shaft.
End pack shear force epsf=1.3*A*b*sc0d/(nos*crs)=1696 N
Actual length of end pack epl=450 mm
Since plgs ≥ gls (3.8 ≥ 0.021537) then glue line stress on end pack is satisfactory.
Actual length intermediate pack ipl=250 mm
Since plgs ≥ gils (3.8 ≥ 0.019383) then glue line stress on intermediate pack is satisfactory.

DESIGN SUMMARY

Depth of section	**175 mm**
Width of section	**75 mm**
Timber strength class C22.	
Number of shafts	**2**
Timber moisture class	**1**
Design comprn stress	**0.26507 N/mm²**
Design comprn strength	**12.308 N/mm²**
Design bending stress	**0.5477 N/mm²**
Design bending strength	**13.538 N/mm²**
Interaction factor	**0.061992**
End pack shear force	**1.696 kN**
End Pack min length	**187.5 mm**
Chosen end pack length	**450 mm**
Design glue line strength	**3.8 N/mm²**
Design glue line stress	**0.021537 N/mm²**
Intermed.pack SF	**0.84801 kN**
Min intermed.pack length	**187.5 mm**
Chosen pack ctrs	**900 mm**
Perm max centres of packs for buckling	**1515.5 mm**
Chosen inter pack length	**250 mm**
Design glue line strength	**3.8 N/mm²**
Design glue line stress	**0.019383 N/mm²**

Location: Spaced rectangular section with axial load and bending

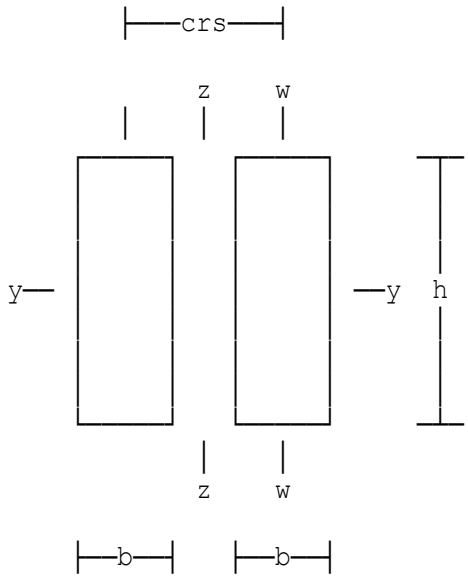

Rectangular timber member composed of two or more equal shafts spaced apart by end and intermediate packing pieces. Member subject to axial load and bending about y-y. Calculations to EC5 incorporating National Annex Amendment No.2.

Design BM about yy (positive)	Md'=0 kNm
Design shear force in z direction	Vdz'=3.55 kN
Design axial load (+ve compress)	Nd'=25.56 kN
Eff.length for bending about yy	Ley=4000 mm
Eff.length for bending about zz	Lez=4000 mm
Depth of section	h=120 mm
Width of section	b=35 mm
Number of shafts	nos=2
Distance between Crs of shafts	crs=105 mm
Timber strength class C24.	
Actual length of the column	coll=4000 mm
Intermediate pack centres	ipcrs=600 mm
Depth factor (Clause 3.2)	kh=(150/h)^0.2=1.0456
Load-sharing modification factor	ksys=1.0
Factor η from Table C.1	eta=1
Max instability factor	kcy=1
Instability factor	kcz=1/(kz+(kz^2-rsrz^2)^0.5)=0.33132
Shear reduction factor	ksh=0.67
Effective length about zz	Le=3.2 m

Packs for spaced columns

Fixings are required to transfer a shear force between the abutting face of the packing and one shaft.
End pack shear force epsf=1.3*A*b*sc0d/(nos*crs)=5538 N
Actual length of end pack epl=400 mm
Since plgs ≥ gls (4 ≥ 0.11538) then glue line stress on end pack is satisfactory.
Actual length intermediate pack ipl=230 mm
Since plgs ≥ gils (4 ≥ 0.10033) then glue line stress on intermediate pack is satisfactory.

DESIGN SUMMARY

Depth of section	**120 mm**
Width of section	**35 mm**
Timber strength class C24.	
Number of shafts	**2**
Timber moisture class	**1**
Design comprn stress	**3.0429 N/mm²**
Design comprn strength	**9.6923 N/mm²**
Interaction factor	**0.94756**
Design shear stress	**0.63393 N/mm²**
Design shear strength	**1.2369 N/mm²**
End pack shear force	**5.538 kN**
End Pack min length	**105 mm**
Chosen end pack length	**400 mm**
Design glue line strength	**4 N/mm²**
Design glue line stress	**0.11538 N/mm²**
Intermed.pack SF	**2.769 kN**
Min intermed.pack length	**105 mm**
Chosen pack ctrs	**600 mm**
Perm max centres of packs for buckling	**707.25 mm**
Chosen inter pack length	**230 mm**
Design glue line strength	**4 N/mm²**
Design glue line stress	**0.10033 N/mm²**

Location: Spaced rectangular section with axial load and bending

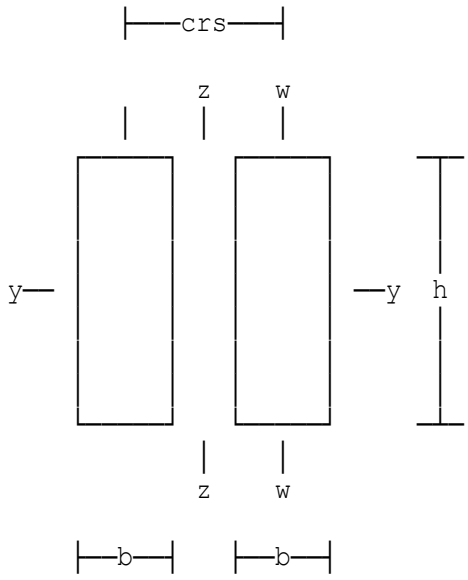

Rectangular timber member composed of two or more equal shafts spaced apart by end and intermediate packing pieces. Member subject to axial load and bending about y-y. Calculations to EC5 incorporating National Annex Amendment No.2.

Design BM about yy (positive)	Md'=0 kNm
Design shear force in z direction	Vdz'=5.112 kN
Design axial load (+ve compress)	Nd'=42.6 kN
Eff.length for bending about yy	Ley=3000 mm
Eff.length for bending about zz	Lez=3000 mm
Depth of section	h=120 mm
Width of section	b=35 mm
Number of shafts	nos=3
Distance between Crs of shafts	crs=105 mm
Timber strength class C22.	
Actual length of the column	coll=3000 mm
Intermediate pack centres	ipcrs=550 mm
Depth factor (Clause 3.2)	kh=(150/h)^0.2=1.0456
Load-sharing modification factor	ksys=1.0
Factor η from Table C.1	eta=1
Max instability factor	kcy=1
Instability factor	kcz=1/(kz+(kz^2-rsrz^2)^0.5)=0.47729
Shear reduction factor	ksh=0.67
Effective length about zz	Le=2.4 m

Packs for spaced columns

Fixings are required to transfer a shear force between the abutting face of the packing and one shaft.
End pack shear force epsf=1.3*A*b*sc0d/(nos*crs)=6153.3 N
Actual length of end pack epl=200 mm
Since plgs ≥ gls (3.8 ≥ 0.25639) then glue line stress on end pack is satisfactory.
Actual length intermediate pack ipl=250 mm
Since plgs ≥ gils (3.8 ≥ 0.10256) then glue line stress on intermediate pack is satisfactory.

DESIGN SUMMARY

Depth of section	**120 mm**
Width of section	**35 mm**
Timber strength class C22.	
Number of shafts	**3**
Timber moisture class	**1**
Design comprn stress	**3.381 N/mm²**
Design comprn strength	**12.308 N/mm²**
Interaction factor	**0.57554**
Design shear stress	**0.60857 N/mm²**
Design shear strength	**1.5668 N/mm²**
End pack shear force	**6.1533 kN**
End Pack min length	**105 mm**
Chosen end pack length	**200 mm**
Design glue line strength	**3.8 N/mm²**
Design glue line stress	**0.25639 N/mm²**
Intermed.pack SF	**3.0767 kN**
Min intermed.pack length	**105 mm**
Chosen pack ctrs	**550 mm**
Perm max centres of packs for buckling	**707.25 mm**
Chosen inter pack length	**250 mm**
Design glue line strength	**3.8 N/mm²**
Design glue line stress	**0.10256 N/mm²**

Location: Spaced rectangular section with axial load and bending

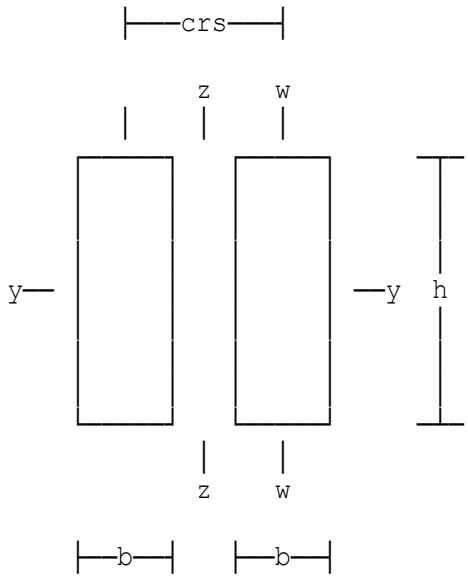

Rectangular timber member composed of two or more equal shafts spaced apart by end and intermediate packing pieces. Member subject to axial load and bending about y-y. Calculations to EC5 incorporating National Annex Amendment No.2.

Design BM about yy (positive)	Md'=0 kNm
Design shear force in z direction	Vdz'=6.816 kN
Design axial load (+ve compress)	Nd'=45 kN
Eff.length for bending about yy	Ley=3000 mm
Eff.length for bending about zz	Lez=3000 mm
Depth of section	h=100 mm
Width of section	b=50 mm
Number of shafts	nos=4
Distance between Crs of shafts	crs=105 mm
Timber strength class D60.	
Actual length of the column	coll=3000 mm
Intermediate pack centres	ipcrs=750 mm
Depth factor (Clause 3.2)	kh=(150/h)^0.2=1.0845
Load-sharing modification factor	ksys=1.0
Factor η from Table C.1	eta=2.5
Max instability factor	kcy=1
Instability factor	kcz=1/(kz+(kz^2-rsrz^2)^0.5)=0.26866
Shear reduction factor	ksh=0.67
Effective length about zz	Le=2.4 m

Packs for spaced columns

Fixings are required to transfer a shear force between the abutting face of the packing and one shaft.

End pack shear force	epsf=1.3*A*b*sc0d/(nos*crs)=6964.3 N
Actual length of end pack	epl=250 mm
Actual length intermediate pack	ipl=250 mm

DESIGN SUMMARY

Depth of section	**100 mm**
Width of section	**50 mm**
Timber strength class D60.	
Number of shafts	**4**
Timber moisture class	**1**
Design comprn stress	**2.25 N/mm²**
Design comprn strength	**20.308 N/mm²**
Interaction factor	**0.41241**
Design shear stress	**0.5112 N/mm²**
Design shear strength	**1.9791 N/mm²**
End pack shear force	**6.9643 kN**
End Pack min length	**82.5 mm**
Intermed.pack SF	**3.4821 kN**
Min intermed.pack length	**82.5 mm**
Chosen pack ctrs	**750 mm**
Perm max centres of packs for buckling	**1010.4 mm**

Location: Spaced rectangular section with axial load and bending

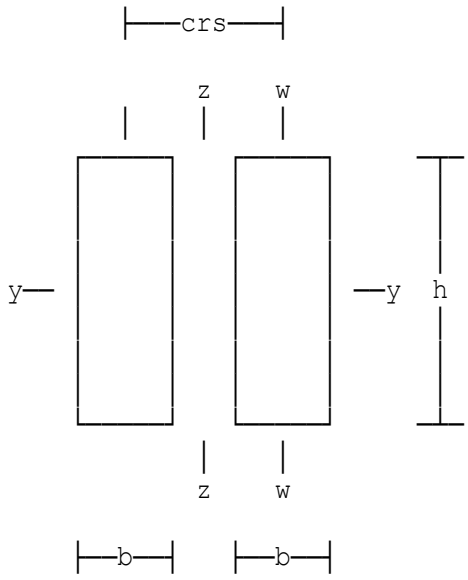

Rectangular timber member composed of two or more equal shafts spaced apart by end and intermediate packing pieces. Member subject to axial load and bending about y-y. Calculations to EC5 incorporating National Annex Amendment No.2.

Design BM about yy (positive)	Md'=1.846 kNm
Design shear force in z direction	Vdz'=3.55 kN
Design axial load (+ve compress)	Nd'=21.584 kN
Eff.length for bending about yy	Ley=3000 mm
Eff.length for bending about zz	Lez=3000 mm
Depth of section	h=119 mm
Width of section	b=63 mm
Number of shafts	nos=2
Distance between Crs of shafts	crs=100 mm

Bending parallel to the grain	fmk=24 N/mm²
Compress parallel to the grain	fc0k=21 N/mm²
Compress perp to the grain	fc90k=2.5 N/mm²
Tension parallel to the grain	ft0k=14 N/mm²
Shear parallel to the grain	fvk=2.5 N/mm²
Mean modulus of elasticity	E0mean=11000 N/mm²
5th percentile MOE	E005=7400 N/mm²
Actual length of the column	coll=3000 mm
Intermediate pack centres	ipcrs=600 mm
Depth factor (Clause 3.2)	kh=(150/h)^0.2=1.0474
Load-sharing modification factor	ksys=1.0
Factor η from Table C.1	eta=1
Max instability factor	kcy=1
Instability factor	kcz=1/(kz+(kz^2-rsrz^2)^0.5)=0.60946
Shear reduction factor	ksh=0.67
Effective length about zz	Le=2.4 m

Packs for spaced columns

Fixings are required to transfer a shear force between the abutting face of the packing and one shaft.
End pack shear force epsf=1.3*A*b*sc0d/(nos*crs)=8838.6 N
Actual length of end pack epl=400 mm
Since plgs ≥ gls (2.5 ≥ 0.18569) then glue line stress on end pack is satisfactory.
Actual length intermediate pack ipl=230 mm
Since plgs ≥ gils (2.5 ≥ 0.16147) then glue line stress on intermediate pack is satisfactory.

DESIGN SUMMARY

Depth of section	**119 mm**
Width of section	**63 mm**
Number of shafts	**2**
Timber moisture class	**1**
Design comprn stress	**1.4395 N/mm²**
Design comprn strength	**12.923 N/mm²**
Design bending stress	**6.2075 N/mm²**
Design bending strength	**15.469 N/mm²**
Interaction factor	**0.51267**
Design shear stress	**0.35514 N/mm²**
Design shear strength	**1.0308 N/mm²**
End pack shear force	**8.8386 kN**
End Pack min length	**55.5 mm**
Chosen end pack length	**400 mm**
Design glue line strength	**2.5 N/mm²**
Design glue line stress	**0.18569 N/mm²**
Intermed.pack SF	**4.4193 kN**
Min intermed.pack length	**55.5 mm**
Chosen pack ctrs	**600 mm**
Perm max centres of packs for buckling	**1273.1 mm**
Chosen inter pack length	**230 mm**
Design glue line strength	**2.5 N/mm²**
Design glue line stress	**0.16147 N/mm²**

Location: Ply box beams with udl & point loads

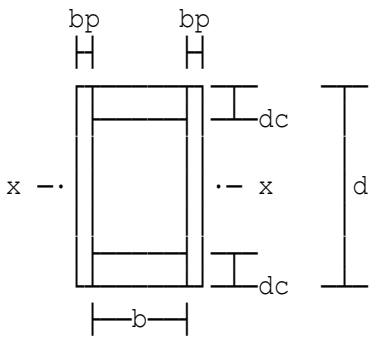

Laterally restrained glued ply or OSB

box beam design to BS5268-2:2002

Depth of ply or OSB section d=350 mm
Nominal width of each ply web bp'=9.5 mm
Depth of each timber section dc=66 mm
Width of timber section b=100 mm
Face grain is parallel to span of the beam.
Strength class C24 to Table 8.
Plywood is Canadian Douglas Fir (unsanded) to Table 45 of BS5268.
Plywood comprises 3 plies
No. of laminates per chord lam27=2
No. of laminates in both chords lam28=4
Since Iratio > 10 and ≤ 20 (11.268 > 10 and ≤ 20) to Clause 2.10.10 the beam should be held in line at the ends and web stiffeners should be used.

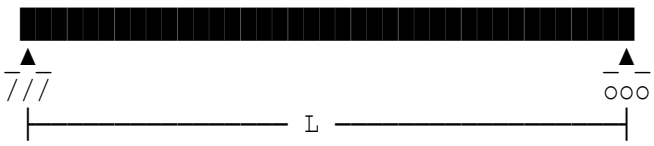

Simply supported beam subjected to vertical loads.

Beam span L=7.5 m
Dist. from left support to start Lau(1)=0 m
Distance from left support to end Lbu(1)=7.5 m
Dead load (unfactored) Gku(1)=0.425 kN/m
Imposed load (unfactored) Qku(1)=0.6 kN/m
Maximum span bending moment 7.207 kNm
Design shear force Fve'=3.8438

Modification factors

Duration of loading K3=1.25
Depth factor K7=0.81*(d^2+92300)/(d^2+56800)
=0.97037
Width modification factor K14=(300/h)^0.11=0.98319

The bending design of the beam is based on the modulus of the flanges and ignores the contribution of the web plate(s).
Permissible stress to be based on the tension grade stress of the timber flanges.

Web to flange connection is to be by glueing to BS6446 requirements.
No. of glue lines ngl=2
Plywood or OSB is to be adhered to timber using nails or staples as the bonding pressure. Mod factor K70=0.9
Length of bearing lb=150 mm
Bearing modification factor K4=1.0

BS5268 part 2 2002 does not give any specific guidance for the design of web stiffeners. Web stiffeners should be placed under any concentrated loads and at bearing positions. Internal stiffeners should also be placed at intervals to ensure buckling of the web members cannot occur. Typically these stiffeners are at centres of between one to two times the clear depth of the web.
In this case this would be at 218 mm to 436 mm centres.

Web splice case 1

Splice plate half length bs=450 mm
Height of each splice plate hs=200 mm
Number of glue lines at this splice section nsp=1
Applied shear force at splice sfs=1.5 kN
Since rollp > sigr (0.21938 N/mm² > 0.061296 N/mm²) then glue line stress is within permissible stresses. Hence splice OK.

DESIGN SUMMARY	**Depth of ply section**	**350 mm**
	Overall beam width	**118 mm**
	Applied BM	**7.207 kNm**
	Moment capacity	**9.5048 kNm**
	Deflection	**19.839 mm**
	Limiting deflection	**22.5 mm**
	Flange to web shear	**0.0814 N/mm²**
	Perm rolling shear	**0.21938 N/mm²**
	Panel shear stress	**0.77249 N/mm²**
	Perm panel stress	**2.15 N/mm²**
	Bearing reaction	**3.8438 kN**
	Bearing capacity	**70.488 kN**

Location: Default case 2

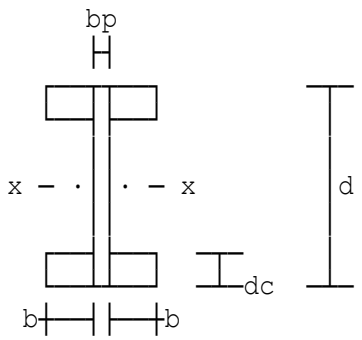

Laterally restrained glued ply or OSB

web I beam design to BS5268-2:2002

Depth of ply or OSB section d=300 mm
Nominal width of ply web bp'=12 mm
Depth of each timber section dc=70 mm
Width of timber section b=44 mm
Face grain is perpendicular to span of the beam.
Strength class C24 to Table 8.
Plywood is Finnish Birch faced, Sanded to Table 32 of BS5268
No. of laminates per chord lam27=2
No. of laminates in both chords lam28=4
Since Iratio > 10 and ≤ 20 (16.837 > 10 and ≤ 20) to Clause 2.10.10 the beam should be held in line at the ends and web stiffeners should be used.

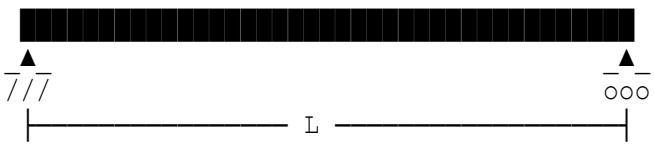

Simply supported beam subjected to vertical loads.

Beam span L=4 m
Dist. from left support to start Lau(1)=0 m
Distance from left support to end Lbu(1)=4 m
Dead load (unfactored) Gku(1)=1 kN/m
Imposed load (unfactored) Qku(1)=1 kN/m
Maximum span bending moment 4 kNm
Design shear force Fve'=4

Modification factors

Duration of loading K3=1
Depth factor K7=(300/d)^0.11=1
Width modification factor K14=(300/h)^0.11=1

The bending design of the beam is based on the modulus of the flanges and ignores the contribution of the web plate(s).
Permissible stress to be based on the tension grade stress of the timber flanges.

Web to flange connection is to be by glueing to BS6446 requirements.
No. of glue lines ngl=2
Plywood or OSB is to be adhered to timber using clamps as the bonding pressure. Mod factor K70=1.0
Length of bearing lb=150 mm
Bearing modification factor K4=1.0

BS5268 part 2 2002 does not give any specific guidance for the design of web stiffeners. Web stiffeners should be placed under any concentrated loads and at bearing positions. Internal stiffeners should also be placed at intervals to ensure buckling of the web members cannot occur. Typically these stiffeners are at centres of between one to two times the clear depth of the web.
In this case this would be at 160 mm to 320 mm centres.

Web splice case 1

Splice plate half length bs=400 mm
Height of each splice plate hs=160 mm
Number of glue lines at this splice section nsp=1
Applied shear force at splice sfs=2.7 kN
Since rollp > sigr (0.615 N/mm² > 0.15746 N/mm²) then glue line stress is within permissible stresses. Hence splice OK.

DESIGN SUMMARY	**Depth of ply section**	**300 mm**
	Overall beam width	**99.5 mm**
	Applied BM	**4 kNm**
	Moment capacity	**5.5932 kNm**
	Deflection	**7.2983 mm**
	Limiting deflection	**12 mm**
	Flange to web shear	**0.10442 N/mm²**
	Perm rolling shear	**0.615 N/mm²**
	Panel shear stress	**1.5033 N/mm²**
	Perm panel stress	**4.83 N/mm²**
	Bearing reaction	**4 kN**
	Bearing capacity	**59.039 kN**

Location: Default case 3

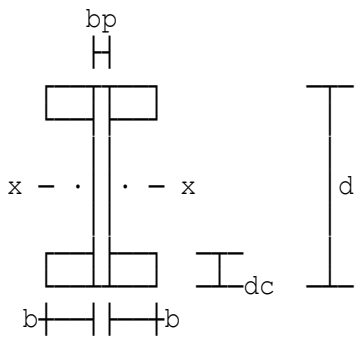

Laterally restrained glued ply or OSB

web I beam design to BS5268-2:2002

Depth of ply or OSB section d=600 mm
Nominal width of ply web bp'=18.5 mm
Depth of each timber section dc=47 mm
Width of timber section b=47 mm
Face grain is parallel to span of the beam.
Strength class C18 to Table 8.
Plywood is Canadian Douglas Fir (unsanded) to Table 45 of BS5268.
Plywood comprises 6 plies
No. of laminates per chord lam27=2
No. of laminates in both chords lam28=4
Since Iratio > 40 (88.983 > 40) to Clause 2.10.10 the beam should be fully restrained along it compression edge and web stiffeners should be used.

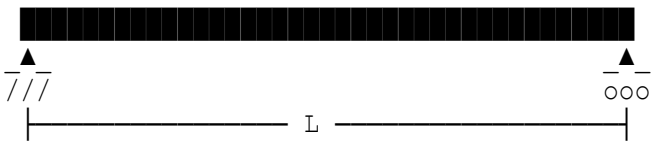

Simply supported beam subjected to vertical loads.

Beam span L=8 m
Dist. from left support to start Lau(1)=0 m
Distance from left support to end Lbu(1)=8 m
Dead load (unfactored) Gku(1)=0.6 kN/m
Imposed load (unfactored) Qku(1)=0.6 kN/m
Maximum span bending moment 9.6 kNm
Design shear force Fve'=4.8

Modification factors

Duration of loading K3=1.25
Depth factor K7=0.81*(d^2+92300)/(d^2+56800)
=0.87899
Width modification factor K14=(300/h)^0.11=0.92659

Design is based on a composite section transformed to suit the varying Young's Modulii of the ply or OSB and timber.

Web to flange connection is to be by glueing to BS6446 requirements.
No. of glue lines ngl=2
Plywood or OSB is to be adhered to timber using clamps as the bonding pressure. Mod factor K70=1.0
Length of bearing lb=100 mm
From BS5268-2 Table 18, bearing is < 75 mm from joist end.
Bearing Modification factor K4=1.0

BS5268 part 2 2002 does not give any specific guidance for the design of web stiffeners. Web stiffeners should be placed under any concentrated loads and at bearing positions. Internal stiffeners should also be placed at intervals to ensure buckling of the web members cannot occur. Typically these stiffeners are at centres of between one to two times the clear depth of the web.
In this case this would be at 506 mm to 1012 mm centres.

Web splice case 1

Splice plate half length bs=600 mm
Height of each splice plate hs=450 mm
Number of glue lines at this splice section nsp=2
Bending Moment at splice point bms=9.6 kNm
Applied shear force at splice sfs=4.8 kN
Since rollp > sigr (0.24375 N/mm² > 0.17075 N/mm²) then glue line stress is within permissible stresses. Hence splice OK.
Since bssp ≤ pply (1.1713 N/mm² ≤ 7.0125 N/mm²) then ply or OSB bending stress at centre of splice plate is within permissible stresses. Hence splice OK.

DESIGN SUMMARY	**Depth of ply section**	**600 mm**
	Overall beam width	**112 mm**
	Applied BM	**9.6 kNm**
	Moment capacity	**25.598 kNm**
	Deflection	**12.861 mm**
	Limiting deflection	**14 mm**
	Flange to web shear	**0.062306 N/mm²**
	Perm rolling shear	**0.24375 N/mm²**
	Panel shear stress	**0.54113 N/mm²**
	Perm panel stress	**2.2125 N/mm²**
	Bearing reaction	**4.8 kN**
	Bearing capacity	**43.579 kN**

Location: Default case 4

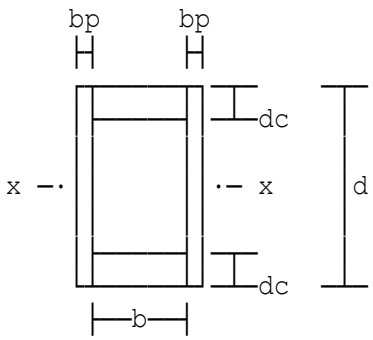

Laterally restrained nailed

ply or OSB box beam design

to BS5268-2:2002

Depth of ply or OSB section d=450 mm
Nominal width of each ply web bp'=18.5 mm
Depth of each timber section dc=47 mm
Width of timber section b=97 mm
Face grain is parallel to span of the beam.
Strength class C24 to Table 8.
Plywood is Canadian Douglas Fir (unsanded) to Table 45 of BS5268.
Plywood comprises 7 plies
No. of laminates per chord lam27=1
No. of laminates in both chords lam28=2
Since Iratio > 10 and ≤ 20 (10.553 > 10 and ≤ 20) to Clause 2.10.10 the beam should be held in line at the ends and web stiffeners should be used.

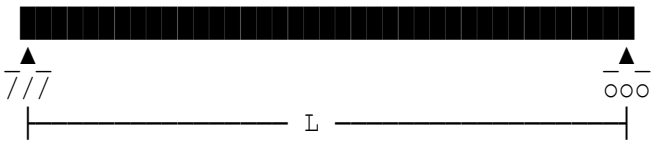

Simply supported beam subjected to vertical loads.

Beam span L=10 m
Dist. from left support to start Lau(1)=0 m
Distance from left support to end Lbu(1)=10 m
Dead load (unfactored) Gku(1)=0.3 kN/m
Imposed load (unfactored) Qku(1)=0.6 kN/m
Maximum span bending moment 11.25 kNm
Design shear force Fve'=4.5

Modification factors

Duration of loading K3=1.25
Depth factor K7=0.81*(d^2+92300)/(d^2+56800)
=0.92089
Width modification factor K14=(300/h)^0.11=0.95638

The bending design of the beam is based on the modulus of the flanges and ignores the contribution of the web plate(s).
Permissible stress to be based on the bending grade stress of the timber flanges.

Web to flange connection is to be by nailing using ordinary round wire nails conforming to BS 1202 : Part 1. Plywood or OSB to timber connection
with nails driven into side grain.
No. of nail shear surfaces ngl=2

Nailed joint position:

Applied SF at nail position	sfs=4.5 kN
Diameter of nails	dn=4 mm
Length of nails	l=75 mm
Basic single shear lateral load	basic=502 N
Mod factor for duration of load	K48=1
Mod factor for number of nails	K50=0.9
Permissible nail load	pnl=basic*K48*K49*K50=451.8 N
Required centres of nails	ncrs=ngl*pnl*Ix/(sfs*1000*fmarea) =141.04 mm

Minimum nail spacings

Edge dist ⊥ to timber grain	edpg=20 mm
End distance // to grain	56 mm
Edge distance in the plywood	12 mm
Distance between lines of nails perpendicular to grain	28 mm
Distance between adjacent nails in any one line, // to grain	56 mm

To fix ply web(s) to the top and bottom chords of the beam adopt 1 row(s) of 4 mm nails 75 mm long at 141 mm centres in each chord.

Length of bearing lb=100 mm
From BS5268-2 Table 18, bearing is < 75 mm from joist end.
Bearing Modification factor K4=1.0

BS5268 part 2 2002 does not give any specific guidance for the design of web stiffeners. Web stiffeners should be placed under any concentrated loads and at bearing positions. Internal stiffeners should also be placed at intervals to ensure buckling of the web members cannot occur. Typically these stiffeners are at centres of between one to two times the clear depth of the web.
In this case this would be at 356 mm to 712 mm centres.

DESIGN SUMMARY

Depth of ply section	**450 mm**
Overall beam width	**133 mm**
Applied BM	**11.25 kNm**
Moment capacity	**14.27 kNm**
Deflection	**39.477 mm**
Limiting deflection	**30 mm**
Precamber of beam	**10.436 mm**
Panel shear stress	**0.35448 N/mm²**
Perm panel stress	**2.2125 N/mm²**
Bearing reaction	**4.5 kN**
Bearing capacity	**56.091 kN**

Location: Default case 5

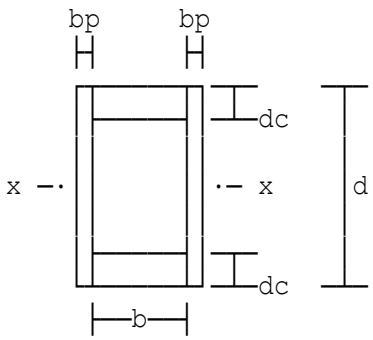

Laterally restrained glued ply or OSB

box beam design to BS5268-2:2002

Depth of ply or OSB section d=1200 mm
Nominal width of each ply web bp'=18 mm
Depth of each timber section dc=147 mm
Width of timber section b=147 mm
Face grain is perpendicular to span of the beam.
Strength class C24 to Table 8.
Plywood is Finnish Birch faced, Sanded to Table 32 of BS5268
No. of laminates per chord lam27=3
No. of laminates in both chords lam28=6
Since Iratio > 40 (47.823 > 40) to Clause 2.10.10 the beam should be fully restrained along it compression edge and web stiffeners should be used.

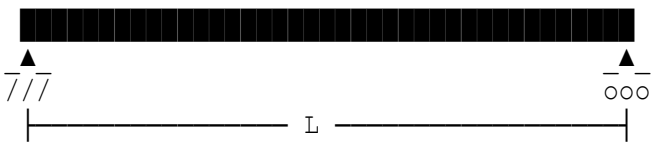

Simply supported beam subjected to vertical loads.

Beam span L=16 m
Dist. from left support to start Lau(1)=0 m
Distance from left support to end Lbu(1)=16 m
Dead load (unfactored) Gku(1)=1.2 kN/m
Imposed load (unfactored) Qku(1)=1 kN/m
Maximum span bending moment 70.4 kNm
Design shear force Fve'=17.6

Modification factors

Duration of loading K3=1.25
Depth factor K7=0.81*(d^2+92300)/(d^2+56800)
=0.82921
Width modification factor K14=(300/h)^0.11=0.85857

Bending design is to be based on the full composite section and includes the contribution of the web(s).
Permissible stress to be based on the tension grade stress of the timber flanges pbs=sigtad=4.4817 N/mm²

Web to flange connection is to be by glueing to BS6446 requirements.
No. of glue lines ngl=2
Plywood or OSB is to be adhered to timber using clamps as the bonding pressure. Mod factor K70=1.0
Length of bearing lb=150 mm
Bearing modification factor K4=1.0

BS5268 part 2 2002 does not give any specific guidance for the design of web stiffeners. Web stiffeners should be placed under any concentrated loads and at bearing positions. Internal stiffeners should also be placed at intervals to ensure buckling of the web members cannot occur. Typically these stiffeners are at centres of between one to two times the clear depth of the web.
In this case this would be at 906 mm to 1812 mm centres.

DESIGN SUMMARY	**Depth of ply section**	**1200 mm**
	Overall beam width	**181.2 mm**
	Applied BM	**70.4 kNm**
	Moment capacity	**110.42 kNm**
	Deflection	**24.049 mm**
	Limiting deflection	**48 mm**
	Flange to web shear	**0.040104 N/mm²**
	Perm rolling shear	**0.615 N/mm²**
	Panel shear stress	**0.5313 N/mm²**
	Perm panel stress	**4.83 N/mm²**
	Bearing reaction	**17.6 kN**
	Bearing capacity	**82.337 kN**

Location: Ply box beams with udl & point loads

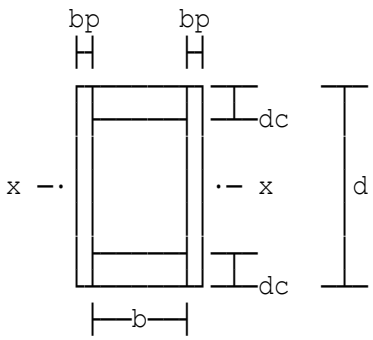

Laterally restrained glued ply or OSB box beam design to BS5268-2:2002

Depth of ply or OSB section d=350 mm
Actual width of each OSB web bp'=9 mm
Depth of each timber section dc=66 mm
Width of timber section b=100 mm
Face grain is parallel to span of the beam.
Strength class C24 to Table 8.
Oriented strand board of Grade 3 (OSB/3) to BS EN12369-1:2001 and BS EN300:1997.
Oriented strand board service class 1
No. of laminates per chord lam27=2
No. of laminates in both chords lam28=4
Since Iratio > 10 and ≤ 20 (11.268 > 10 and ≤ 20) to Clause 2.10.10 the beam should be held in line at the ends and web stiffeners should be used.

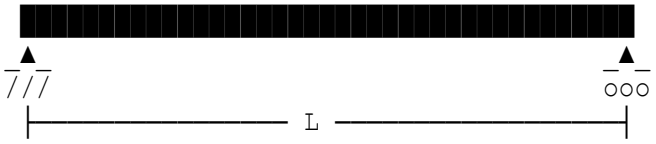

Simply supported beam subjected to vertical loads.

Beam span L=7.5 m
Dist. from left support to start Lau(1)=0 m
Distance from left support to end Lbu(1)=7.5 m
Dead load (unfactored) Gku(1)=0.425 kN/m
Imposed load (unfactored) Qku(1)=0.6 kN/m
Maximum span bending moment 7.207 kNm
Design shear force Fve'=3.8438

Modification factors

Duration of loading K3=1.25
Depth factor K7=0.81*(d^2+92300)/(d^2+56800)
=0.97037
Width modification factor K14=(300/h)^0.11=0.98319

The bending design of the beam is based on the modulus of the flanges and ignores the contribution of the web plate(s).
Permissible stress to be based on the tension grade stress of the timber flanges.

Web to flange connection is to be by glueing to BS6446 requirements.
No. of glue lines ngl=2
Plywood or OSB is to be adhered to timber using nails or staples as the bonding pressure. Mod factor K70=0.9
Length of bearing lb=150 mm
Bearing modification factor K4=1.0

BS5268 part 2 2002 does not give any specific guidance for the design of web stiffeners. Web stiffeners should be placed under any concentrated loads and at bearing positions. Internal stiffeners should also be placed at intervals to ensure buckling of the web members cannot occur. Typically these stiffeners are at centres of between one to two times the clear depth of the web.
In this case this would be at 218 mm to 436 mm centres.

Web splice case 1

Splice plate half length bs=450 mm
Height of each splice plate hs=200 mm
Number of glue lines at this splice section nsp=1
Applied shear force at splice sfs=1.5 kN
Since rollp > sigr (0.12821 N/mm² > 0.061296 N/mm²) then glue line stress is within permissible stresses. Hence splice OK.

DESIGN SUMMARY	**Depth of OSB/3 section**	**350 mm**
	Overall beam width	**118 mm**
	Applied BM	**7.207 kNm**
	Moment capacity	**9.5048 kNm**
	Deflection	**19.324 mm**
	Limiting deflection	**22.5 mm**
	Flange to web shear	**0.0814 N/mm²**
	Perm rolling shear	**0.12821 N/mm²**
	Panel shear stress	**0.77249 N/mm²**
	Perm panel stress	**1.9373 N/mm²**
	Bearing reaction	**3.8438 kN**
	Bearing capacity	**67.788 kN**

Location: Ply box beams with udl & point loads

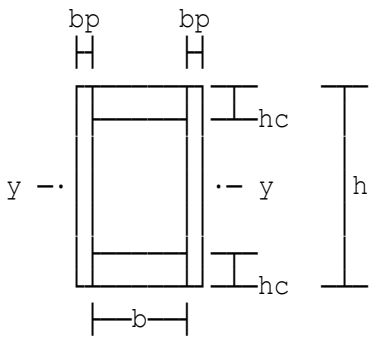

Laterally restrained glued ply or OSB box beam design to EC5 with National Annex Amendment No.2

Depth of ply or OSB section h=350 mm
Nominal width of each ply web bp'=9.5 mm
Depth of each timber section hc=66 mm
Width of timber section b=100 mm
Face grain is parallel to span of beam.
Timber strength class C24.
Plywood is Canadian Douglas Fir (unsanded).
Plywood comprises 3 plies.
Since Iratio > 10 and ≤ 20 (11.268 > 10 and ≤ 20) the beam should be held in line at the ends and web stiffeners should be used.

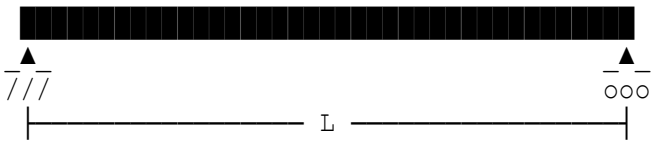

Simply supported beam subject to vertical loads.

Beam span L=7.5 m
Dist. from left support to start Lau(1)=0 m
Distance from left support to end Lbu(1)=7.5 m
Permanent load (unfactored) Gku(1)=0.425 kN/m
Variable load 1 (unfactored) Qua(1)=0.6 kN/m

Characteristic values of actions

Permanent:
Reaction at left hand end 1.5938 kN
Reaction at right hand end 1.5938 kN
Maximum span moment Mkp=2.9883 kNm
Maximum shear force Fkp=1.5938 kN
Variable 1:
Reaction at left hand end 2.25 kN
Reaction at right hand end 2.25 kN
Maximum span moment Mkv1=4.2188 kNm
Maximum shear force Fkv1=2.25 kN

Modification factors

Depth factor (Clause 3.2) kh=(150/hc)^0.2=1.1784
Width modification factor kw=(150/hc')^0.2=1.0845
Load-sharing modification factor ksys=1.0
The bending design of the beam is based on the modulus of the flanges and ignores the contribution of the web plate(s).
Design strength to be based on the tension strength of the timber flanges.
Web service class servc=2
Web to flange connection is to be by glueing.
No. of glue lines ngl=2
Plywood or OSB is to be adhered to timber using nails or staples as the bonding pressure.
Length of bearing lb=150 mm
Bearing modification factor kc90=1.5
Web stiffeners should be placed under any concentrated loads and at bearing positions. Internal stiffeners should also be placed at intervals to ensure buckling of the web members cannot occur. Typically these stiffeners are at centres of between one to two times the clear depth of the web. In this case this would be at 218 mm to 436 mm centres.

Web splice case 1

Splice plate half length bs=450 mm
Height of each splice plate hs=200 mm
Number of glue lines at this splice section nsp=1
Design shear force at splice sfs=1.5 kN
Since pfv90d > sigr (0.36535 N/mm² > 0.061296 N/mm²) glue line design stress is within design strength. Hence splice is OK.

DESIGN SUMMARY	**Depth of ply section**	**350 mm**
	Overall beam width	**118 mm**
	Design bending moment	**10.362 kNm**
	Design moment capacity	**14.983 kNm**
	Deflection	**26.991 mm**
	Limiting deflection	**30 mm**
	Flange/web shear stress	**0.11704 N/mm²**
	Rolling shear strength	**0.36535 N/mm²**
	Design bearing reaction	**5.5266 kN**
	Design bearing capacity	**49.015 kN**

Location: Default case 2

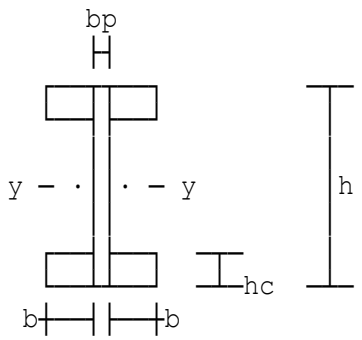

Laterally restrained glued ply or OSB web I beam design to EC5 with National Annex Amendment No.2

Depth of ply or OSB section h=300 mm
Nominal width of ply web bp'=12 mm
Depth of each timber section hc=70 mm
Width of timber section b=44 mm
Face grain is perpendicular to span of beam.
Timber strength class C24.
Plywood is Finnish Birch faced (sanded).
Since Iratio > 10 and ≤ 20 (16.837 > 10 and ≤ 20) the beam should be held in line at the ends and web stiffeners should be used.

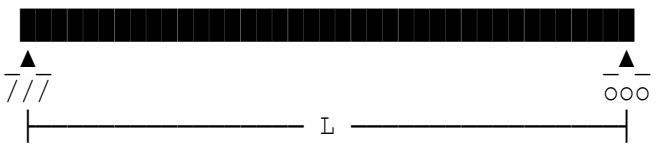

Simply supported beam subject to vertical loads.

Beam span L=4 m
Dist. from left support to start Lau(1)=0 m
Distance from left support to end Lbu(1)=4 m
Permanent load (unfactored) Gku(1)=1 kN/m
Variable load 1 (unfactored) Qua(1)=1 kN/m

Characteristic values of actions

Permanent:
Reaction at left hand end 2 kN
Reaction at right hand end 2 kN
Maximum span moment Mkp=2 kNm
Maximum shear force Fkp=2 kN
Variable 1:
Reaction at left hand end 2 kN
Reaction at right hand end 2 kN
Maximum span moment Mkv1=2 kNm
Maximum shear force Fkv1=2 kN

Modification factors

Depth factor (Clause 3.2) kh=(150/hc)^0.2=1.1647
Width modification factor kw=(150/hc')^0.2=1.1647
Load-sharing modification factor ksys=1.0
The bending design of the beam is based on the modulus of the flanges and ignores the contribution of the web plate(s).
Design strength to be based on the tension strength of the timber flanges.
Web service class servc=2
Web to flange connection is to be by glueing.
No. of glue lines ngl=2
Plywood or OSB is to be adhered to timber using clamps as the bonding pressure.
Length of bearing lb=150 mm
Bearing modification factor kc90=1.5
Web stiffeners should be placed under any concentrated loads and at bearing positions. Internal stiffeners should also be placed at intervals to ensure buckling of the web members cannot occur. Typically these stiffeners are at centres of between one to two times the clear depth of the web. In this case this would be at 160 mm to 320 mm centres.

Web splice case 1

Splice plate half length bs=400 mm
Height of each splice plate hs=160 mm
Number of glue lines at this splice section nsp=1
Design shear force at splice sfs=2.7 kN
Since pfv90d > sigr (0.66568 N/mm² > 0.15746 N/mm²) glue line design stress is within design strength. Hence splice is OK.

DESIGN SUMMARY	**Depth of ply section**	**300 mm**
	Overall beam width	**99.5 mm**
	Design bending moment	**5.7 kNm**
	Design moment capacity	**10.182 kNm**
	Deflection	**9.2122 mm**
	Limiting deflection	**16 mm**
	Flange/web shear stress	**0.14879 N/mm²**
	Rolling shear strength	**0.66568 N/mm²**
	Design bearing reaction	**5.7 kN**
	Design bearing capacity	**54.527 kN**

Location: Default case 3

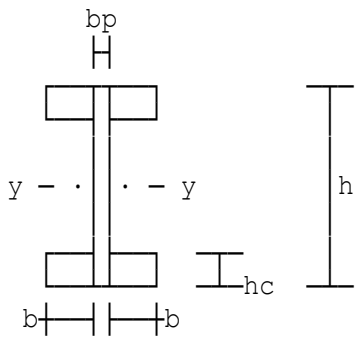

Laterally restrained glued ply or OSB web I beam design to EC5 with National Annex Amendment No.2

Depth of ply or OSB section h=600 mm
Nominal width of ply web bp'=18.5 mm
Depth of each timber section hc=47 mm
Width of timber section b=47 mm
Face grain is parallel to span of beam.
Timber strength class C18.
Plywood is Canadian Douglas Fir (unsanded).
Plywood comprises 6 plies.
Since Iratio > 40 (88.983 > 40) the beam should be fully restrained along its compression edge and web stiffeners should be used.

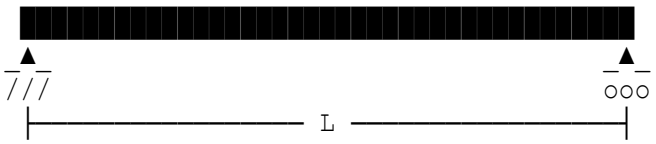

Simply supported beam subject to vertical loads.

Beam span L=8 m
Dist. from left support to start Lau(1)=0 m
Distance from left support to end Lbu(1)=8 m
Permanent load (unfactored) Gku(1)=0.6 kN/m
Variable load 1 (unfactored) Qua(1)=0.6 kN/m

Characteristic values of actions

Permanent:
Reaction at left hand end 2.4 kN
Reaction at right hand end 2.4 kN
Maximum span moment Mkp=4.8 kNm
Maximum shear force Fkp=2.4 kN
Variable 1:
Reaction at left hand end 2.4 kN
Reaction at right hand end 2.4 kN
Maximum span moment Mkv1=4.8 kNm
Maximum shear force Fkv1=2.4 kN

Modification factors

Depth factor (Clause 3.2) kh=(150/hc)^0.2=1.2612
Width modification factor kw=(150/hc')^0.2=1.2612
Load-sharing modification factor ksys=1.1
Design is based on a composite section transformed to suit the varying Young's Modulii of the ply or OSB and timber.
Web service class servc=2
Web to flange connection is to be by glueing.
No. of glue lines ngl=2
Plywood or OSB is to be adhered to timber using clamps as the bonding pressure.
Length of bearing lb=100 mm
Bearing modification factor kc90=1.5
Web stiffeners should be placed under any concentrated loads and at bearing positions. Internal stiffeners should also be placed at intervals to ensure buckling of the web members cannot occur. Typically these stiffeners are at centres of between one to two times the clear depth of the web. In this case this would be at 506 mm to 1012 mm centres.

Web splice case 1

Splice plate half length bs=600 mm
Height of each splice plate hs=450 mm
Number of glue lines at this splice section nsp=2
Bending Moment at splice point bms=13.68 kNm
Design shear force at splice sfs=6.84 kN
Since pfv90d > sigr (0.63394 N/mm² > 0.24332 N/mm²) glue line design stress is within design strength. Hence splice is OK.
Since bssp ≤ fply (2.931 N/mm² ≤ 8.36 N/mm²) ply or OSB design bending stress at centre of splice plate is within the design strength. Hence splice OK.

DESIGN SUMMARY	**Depth of ply section**	**600 mm**
	Overall beam width	**112 mm**
	Design bending moment	**13.68 kNm**
	Design moment capacity	**28.492 kNm**
	Deflection	**14.824 mm**
	Limiting deflection	**32 mm**
	Flange/web shear stress	**0.088786 N/mm²**
	Rolling shear strength	**0.63394 N/mm²**
	Design bearing reaction	**6.84 kN**
	Design bearing capacity	**29.578 kN**

Location: Default case 4

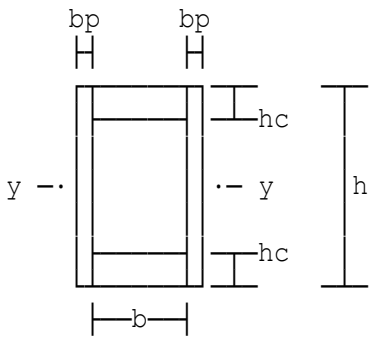

Laterally restrained nailed ply or OSB box beam design to EC5 incorporating National Annex Amendment No.2

Depth of ply or OSB section h=450 mm
Nominal width of each ply web bp'=18.5 mm
Depth of each timber section hc=47 mm
Width of timber section b=97 mm
Face grain is parallel to span of beam.
Timber strength class C24.
Plywood is Canadian Douglas Fir (unsanded).
Plywood comprises 7 plies.
Since Iratio > 10 and ≤ 20 (10.553 > 10 and ≤ 20) the beam should be held in line at the ends and web stiffeners should be used.

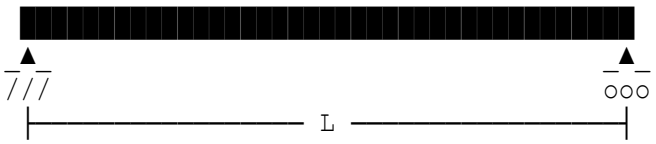

Simply supported beam subject to vertical loads.

Beam span L=10 m
Dist. from left support to start Lau(1)=0 m
Distance from left support to end Lbu(1)=10 m
Permanent load (unfactored) Gku(1)=0.3 kN/m
Variable load 1 (unfactored) Qua(1)=0.6 kN/m

Characteristic values of actions

Permanent:
Reaction at left hand end 1.5 kN
Reaction at right hand end 1.5 kN
Maximum span moment Mkp=3.75 kNm
Maximum shear force Fkp=1.5 kN
Variable 1:
Reaction at left hand end 3 kN
Reaction at right hand end 3 kN
Maximum span moment Mkv1=7.5 kNm
Maximum shear force Fkv1=3 kN

Modification factors

Depth factor (Clause 3.2) kh=(150/hc)^0.2=1.2612
Width modification factor kw=(150/hc')^0.2=1.0911
Load-sharing modification factor ksys=1.0
The bending design of the beam is based on the modulus of the flanges and ignores the contribution of the web plate(s).
Design strength to be based on the bending strength of the timber flanges.
Web service class servc=2
Web to flange connection is to be by nailing using ordinary round wire nails. Plywood or OSB to timber connection with nails driven into side grain.
Number of nail shear surfaces ngl=2

Nailed joint position:

Design SF at nail position sfs=6.525 kN

Headside member - plywood group 1 comprising:
(a) American construction and industrial plywood
(b) Canadian Douglas fir plywood
(c) Canadian softwood plywood
(d) Swedish softwood plywood
(e) Finnish conifer plywood
Ply characteristic density pk1=390 kg/m³
Timber characteristic density pk2=350 kg/m³
Diameter of nails dn=4 mm
Length of nails l=75 mm
Basic loads in N will be derived from expressions given in Section 8 assuming round nails.
Equations a b c d e f
Min value of equations (a)-(f) Gmin=968.09

Char. nail shear capacity basic=Gmin=968.09 N
Material factor for connections gamM=1.3
Design resistance per nail pnl=kmod*basic/gamM=595.75 N
Required centres of nails ncrs=ngl*pnl*Iy/(sfs*1000*fmarea)
=128.26 mm

Minimum nail spacings - EC5 Table 8.2 and Fig 8.7

Minimum spacing of nails within
one row // to grain a1=(5+7*COS(alpha))*dn=48 mm
Actual spacing of nails within
one row // to grain a1=48 mm
Spacing of rows of nails
perpendicular to grain a2=5*dn=20 mm
End distance (loaded) a3t=(10+5*COS(alpha))*dn=60 mm
End distance (unloaded) a3c=10*dn=40 mm
Edge distance (loaded) a4t=(5+2*SIN(alpha))*dn=20 mm
Edge distance (unloaded) a4c=(5+5*SIN(alpha))*dn=20 mm
Fix ply webs to the top and bottom chords of the beam. Adopt 1 row(s) of 4 mm nails 75 mm long at 128 mm centres in each chord.

Length of bearing lb=100 mm
Bearing modification factor kc90=1.5
Web stiffeners should be placed under any concentrated loads and at bearing positions. Internal stiffeners should also be placed at intervals to ensure buckling of the web members cannot occur. Typically these stiffeners are at centres of between one to two times the clear depth of the web. In this case this would be at 356 mm to 712 mm centres.

DESIGN SUMMARY	**Depth of ply section**	**450 mm**
	Overall beam width	**133 mm**
	Design bending moment	**16.313 kNm**
	Design moment capacity	**30.788 kNm**
	Deflection	**31.821 mm**
	Limiting deflection	**40 mm**
	Design bearing reaction	**6.525 kN**
	Design bearing capacity	**45.905 kN**

Location: Default case 5

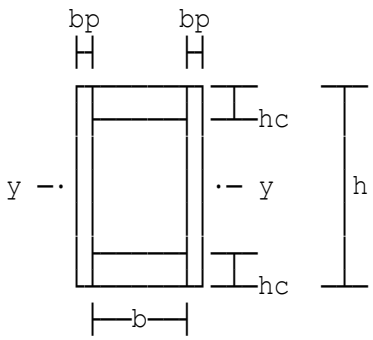

Laterally restrained glued ply or OSB box beam design to EC5 with National Annex Amendment No.2

Depth of ply or OSB section h=1200 mm
Nominal width of each ply web bp'=18 mm
Depth of each timber section hc=147 mm
Width of timber section b=147 mm
Face grain is perpendicular to span of beam.
Timber strength class C24.
Plywood is Finnish Birch faced (sanded).
Since Iratio > 40 (47.823 > 40) the beam should be fully restrained along its compression edge and web stiffeners should be used.

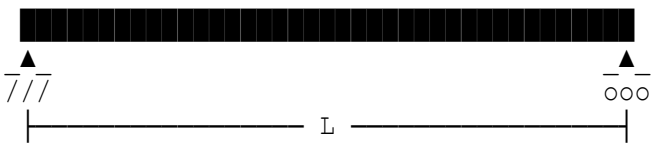

Simply supported beam subject to vertical loads.

Beam span L=16 m
Dist. from left support to start Lau(1)=0 m
Distance from left support to end Lbu(1)=16 m
Permanent load (unfactored) Gku(1)=1.2 kN/m
Variable load 1 (unfactored) Qua(1)=1 kN/m

Characteristic values of actions

Permanent:
Reaction at left hand end 9.6 kN
Reaction at right hand end 9.6 kN
Maximum span moment Mkp=38.4 kNm
Maximum shear force Fkp=9.6 kN
Variable 1:
Reaction at left hand end 8 kN
Reaction at right hand end 8 kN
Maximum span moment Mkv1=32 kNm
Maximum shear force Fkv1=8 kN

Modification factors

Depth factor (Clause 3.2) kh=(150/hc)^0.2=1.004
Width modification factor kw=(150/hc')^0.2=1.004
Load-sharing modification factor ksys=1.0
Bending design is to be based on the full composite section and includes the contribution of the web(s).
Design strength to be based on the tension strength of the timber flanges pbs=ft0d=7.2794 N/mm²
Web service class servc=2
Web to flange connection is to be by glueing.
No. of glue lines ngl=2
Plywood or OSB is to be adhered to timber using clamps as the bonding pressure.
Length of bearing lb=150 mm
Bearing modification factor kc90=1.5
Web stiffeners should be placed under any concentrated loads and at bearing positions. Internal stiffeners should also be placed at intervals to ensure buckling of the web members cannot occur. Typically these stiffeners are at centres of between one to two times the clear depth of the web. In this case this would be at 906 mm to 1812 mm centres.

DESIGN SUMMARY	**Depth of ply section**	**1200 mm**
	Overall beam width	**181.2 mm**
	Design bending moment	**99.84 kNm**
	Design moment capacity	**284.89 kNm**
	Deflection	**40.662 mm**
	Limiting deflection	**64 mm**
	Flange/web shear stress	**0.056875 N/mm²**
	Rolling shear strength	**0.78421 N/mm²**
	Design bearing reaction	**24.96 kN**
	Design bearing capacity	**116.93 kN**

Location: Ply box beams with udl & point loads

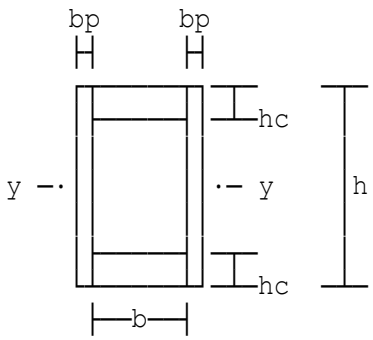

Laterally restrained glued ply or OSB box beam design to EC5 with National Annex Amendment No.2

Depth of ply or OSB section h=350 mm
Actual width of each OSB web bp'=9 mm
Depth of each timber section hc=66 mm
Width of timber section b=100 mm
Face grain is parallel to span of beam.
Timber strength class C24.
Oriented Strand Board:
Oriented strand board of Grade 3 (OSB/3) to BS EN12369-1:2001 and BS EN300:1997.
Oriented strand board service class 1
Actual thickness of OSB bp=9 mm
Since Iratio > 10 and ≤ 20 (11.268 > 10 and ≤ 20) the beam should be held in line at the ends and web stiffeners should be used.

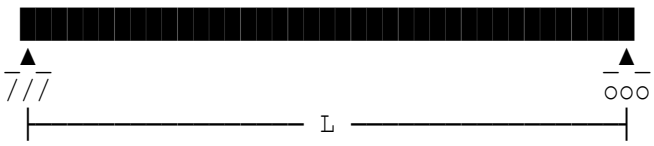

Simply supported beam subject to vertical loads.

Beam span L=7.5 m
Dist. from left support to start Lau(1)=0 m
Distance from left support to end Lbu(1)=7.5 m
Permanent load (unfactored) Gku(1)=0.425 kN/m
Variable load 1 (unfactored) Qua(1)=0.6 kN/m

Characteristic values of actions

Permanent:
Reaction at left hand end 1.5938 kN
Reaction at right hand end 1.5938 kN
Maximum span moment Mkp=2.9883 kNm
Maximum shear force Fkp=1.5938 kN
Variable 1:
Reaction at left hand end 2.25 kN
Reaction at right hand end 2.25 kN
Maximum span moment Mkv1=4.2188 kNm
Maximum shear force Fkv1=2.25 kN

Modification factors

Depth factor (Clause 3.2) kh=(150/hc)^0.2=1.1784
Width modification factor kw=(150/hc')^0.2=1.0845
Load-sharing modification factor ksys=1.0
The bending design of the beam is based on the modulus of the flanges and ignores the contribution of the web plate(s).
Design strength to be based on the tension strength of the timber flanges.
Web to flange connection is to be by glueing.
No. of glue lines ngl=2
Plywood or OSB is to be adhered to timber using nails or staples as the bonding pressure.
Length of bearing lb=150 mm
Bearing modification factor kc90=1.5
Web stiffeners should be placed under any concentrated loads and at bearing positions. Internal stiffeners should also be placed at intervals to ensure buckling of the web members cannot occur. Typically these stiffeners are at centres of between one to two times the clear depth of the web. In this case this would be at 218 mm to 436 mm centres.

Web splice case 1

Splice plate half length bs=450 mm
Height of each splice plate hs=200 mm
Number of glue lines at this splice section nsp=1
Design shear force at splice sfs=1.5 kN
Since pfv90d > sigr (0.4105 N/mm² > 0.061296 N/mm²) glue line design stress is within design strength. Hence splice is OK.

DESIGN SUMMARY	**Depth of OSB/3 section**	**350 mm**
	Overall beam width	**118 mm**
	Design bending moment	**10.362 kNm**
	Design moment capacity	**14.983 kNm**
	Deflection	**23.617 mm**
	Limiting deflection	**30 mm**
	Flange/web shear stress	**0.11704 N/mm²**
	Rolling shear strength	**0.4105 N/mm²**
	Design bearing reaction	**5.5266 kN**
	Design bearing capacity	**57.835 kN**

Location: Example page 268 from book by Jack Porteous

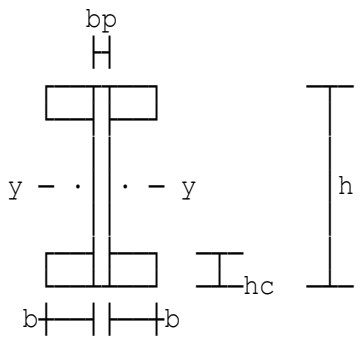

Laterally restrained glued ply or OSB web I beam design to EC5 with National Annex Amendment No.2

Depth of ply or OSB section h=250 mm
Nominal width of ply web bp'=12.5 mm
Depth of each timber section hc=50 mm
Width of timber section b=45 mm
Face grain is perpendicular to span of beam.

Bending parallel to the grain fmk=18 N/mm²
Compress parallel to the grain fc0k=18 N/mm²
Compress perp to the grain fc90k=2.2 N/mm²
Tension parallel to the grain ft0k=11 N/mm²
Shear parallel to the grain fvk=3.4 N/mm²
Mean modulus of elasticity E0mean=9000 N/mm²
5th percentile MOE E005=6000 N/mm²
User defined plywood characteristic strength properties.
Minimum thickness of ply bp=12 mm
Bending face grain // to span pfmk=20.2 N/mm²
Tension // to surface grain pft0k=11.1 N/mm²
Bending face grain ⊥ to span pfm90k=10.4 N/mm²
Tension ⊥ to surface grain pft90k=7.4 N/mm²
Compress // to surface grain pfc0k=14.5 N/mm²
Compress ⊥ to surface grain pfc90k=9.7 N/mm²
Rolling shear pfvrk=0.64 N/mm²
Panel shear pfv0k=3.5 N/mm²
Surface grain ⊥ to the span Emper=3960 N/mm²
Panel shear modulus of rigidity Gw=430 N/mm²
Since Iratio > 10 and ≤ 20 (12.126 > 10 and ≤ 20) the beam should be held in line at the ends and web stiffeners should be used.

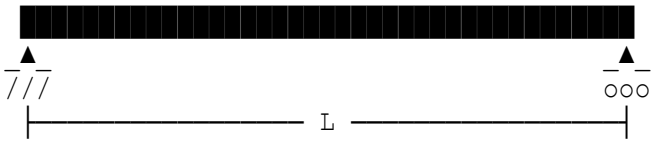

Simply supported beam subject to vertical loads.

Beam span L=4 m
Dist. from left support to start Lau(1)=0 m
Distance from left support to end Lbu(1)=4 m
Permanent load (unfactored) Gku(1)=0.405 kN/m
Variable load 1 (unfactored) Qua(1)=0.9 kN/m

Characteristic values of actions

Permanent:
Reaction at left hand end 0.81 kN
Reaction at right hand end 0.81 kN
Maximum span moment Mkp=0.81 kNm
Maximum shear force Fkp=0.81 kN
Variable 1:
Reaction at left hand end 1.8 kN
Reaction at right hand end 1.8 kN
Maximum span moment Mkv1=1.8 kNm
Maximum shear force Fkv1=1.8 kN

Modification factors

Depth factor (Clause 3.2) kh=(150/hc)^0.2=1.2457
Width modification factor kw=(150/hc')^0.2=1.2457
Load-sharing modification factor ksys=1.0
Bending design is to be based on the full composite section and includes the contribution of the web(s).
Design strength to be based on the bending strength of the timber flanges pbs=fmd=13.799 N/mm²
Web service class servc=2
Web to flange connection is to be by glueing.
No. of glue lines ngl=2
Plywood or OSB is to be adhered to timber using clamps as the bonding pressure.
Length of bearing lb=100 mm
Bearing modification factor kc90=1.5
Web stiffeners should be placed under any concentrated loads and at bearing positions. Internal stiffeners should also be placed at intervals to ensure buckling of the web members cannot occur. Typically these stiffeners are at centres of between one to two times the clear depth of the web. In this case this would be at 150 mm to 300 mm centres.

DESIGN SUMMARY	**Depth of ply section**	**250 mm**
	Overall beam width	**102 mm**
	Design bending moment	**3.7935 kNm**
	Design moment capacity	**11.611 kNm**
	Deflection	**11.978 mm**
	Limiting deflection	**16 mm**
	Flange/web shear stress	**0.1588 N/mm²**
	Rolling shear strength	**0.23718 N/mm²**
	Design bearing reaction	**3.7935 kN**
	Design bearing capacity	**29.877 kN**

Location: Stressed skin floor joists

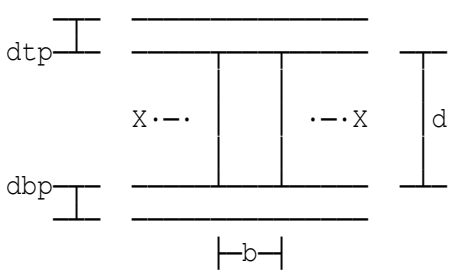

Glued stressed skin floor joist

with top and bottom ply sheathing

to BS5268-2:2002

Depth of timber joist section d=200 mm
Width of timber joist section b=63 mm
Nominal depth of top ply dtp'=22.5 mm
Nominal depth of bottom ply dbp'=12.5 mm
Plywood face grain is perpendicular to span of floor joist.

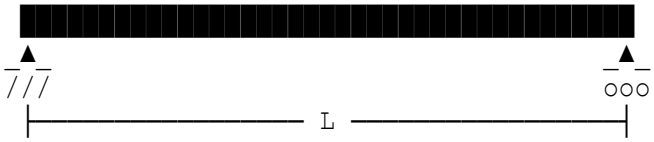

Joist span L=5 m
Centres of joists crs=400 mm
Effective width of top flange ewidth=400 mm

Grade stresses

Strength class C24 to Table 8.
Plywood is Canadian Douglas Fir (unsanded) to Table 45 of BS5268
Top plywood sheath comprises 7 plies.
Bottom plywood sheath comprises 4 plies.
Timber service class adopted tmclass=1
Timber service class modification factor K2=1 as Table 16
Member is in a load-sharing system as defined by Clause 13.
Load-sharing modification factor K8=1.1
The mean modulus of elasticity should be used to calculate deflections and displacements under both dead and imposed loads.

Loading - UDL

Other dead UDL Gkux'=0.25 kN/m²
Imposed load Qkux=1.5 kN/m²
Distance from left support Lc(1)=2.5 m
Dead load (unfactored) Gkc(1)=0.5 kN
Imposed load (unfactored) Qkc(1)=0.5 kN
Maximum span moment M'=1.25 kNm

Analysis results

Unfactored dead shear Rudlhe=Gk*L/2+Plds=0.79378 kN
Unfactored imposed shear Ruilhe=Qk*L/2+Plis=1.75 kN
Shear force Fve=(Gk+Qk)*L/2+Plds+Plis=2.5438 kN
Maximum span bending moment M=(Gk+Qk)*L^2/8+M'=3.8047 kNm

Duration of loading K3=1.25
Depth factor K7=(300/d)^0.11=1.0456
Width modification factor K14=(300/h)^0.11=1.0456

No of spans which ply is continuous over plycon=3
Transverse stresses and deflection to be based on the clear span of ply.

Rolling shear stress at ply/joist interface (position B)

Web to flange connection is to be by glueing.
Since Eayfa ≥ Eayfb (1.6542E9 ≥ 1.2501E9) the 1st moment of area of the top flange is greater than the 1st moment of area of the bottom flange. Rolling shear will be more critical at the top ply

1st moment of area of critical flange Earoll=Eayfa=1.6542E9 Nmm
Rolling shear stress @ position B torB=Fve*1E3*Earoll/EIx/conwid
=0.086688 N/mm²
Plywood is to be adhered to timber using nails or staples as the bonding pressure. Mod factor K70=0.9
Since rollp ≥ torB (0.31556 ≥ 0.086688) the applied rolling shear is less than the permissible shear. Hence OK.
Length of bearing lb=100 mm
From BS5268-2 Table 18, bearing is < 75 mm from joist end.
Bearing Modification factor K4=1.0

Stresses due to bending action

DESIGN SUMMARY	**Compress @ Top face of top ply**	**1.0228 N/mm²**
	Perm Compress stress in top ply	**5.2375 N/mm²**
	Bending in joist @ joist/top ply	**5.1748 N/mm²**
	Bending in joist @ joist/btm ply	**5.4916 N/mm²**
	Perm bending stress in joist	**10.783 N/mm²**
	Tension @ btm face of btm ply	**1.3569 N/mm²**
	Perm tension stress in btm ply	**3.9375 N/mm²**
	Bending stress in top ply spanning between timber joist	**0.7593 N/mm²**
	Perm ply bending stress	**15.5 N/mm²**
	Transverse deflection of top ply	**0.11205 mm**
	Permissible transverse deflection	**1.011 mm**
	Deflection of composite section	**12.552 mm**
	Limiting deflection of comp sect	**15 mm**
	Lateral shear @ neutral axis	**0.25454 N/mm²**
	Permiss.lateral shear in joist	**0.97625 N/mm²**
	Ply flange to joist shear stress	**0.086688 N/mm²**
	Permissible rolling shear in ply	**0.31556 N/mm²**
	Bearing stress on ply	**0.063595 N/mm²**
	Permissible ply bearing stress	**2.7 N/mm²**
	Bearing stress on joist	**0.40378 N/mm²**
	Permissible joist bearing stress	**3.3 N/mm²**

Location: Stressed skin floor joists

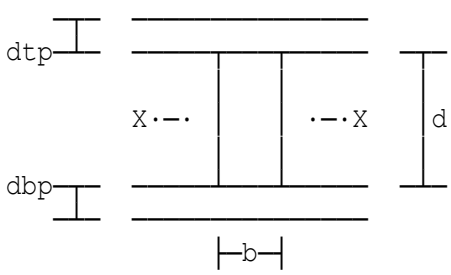

Glued stressed skin floor joist

with top and bottom ply sheathing

to BS5268-2:2002

Depth of timber joist section d=200 mm
Width of timber joist section b=47 mm
Nominal depth of top ply dtp'=24 mm
Nominal depth of bottom ply dbp'=12 mm
Plywood face grain is perpendicular to span of floor joist.

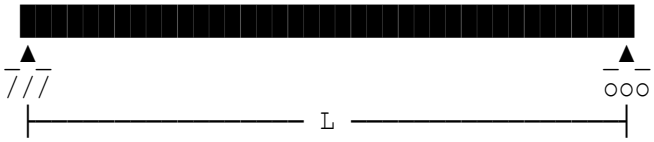

Joist span L=6 m
Centres of joists crs=600 mm
Effective width of top flange ewidth=600 mm

Grade stresses

Strength class C24 to Table 8.
Plywood is Finnish Birch-faced (sanded) to Table 49 of BS5268
Top plywood sheath comprises 17 plies.
Bottom plywood sheath comprises 9 plies.
Timber service class adopted tmclass=1
Timber service class modification factor K2=1 as Table 16
Member is in a load-sharing system as defined by Clause 13.
Load-sharing modification factor K8=1.1
The mean modulus of elasticity should be used to calculate deflections and displacements under both dead and imposed loads.

Loading - UDL

Other dead UDL Gkux'=0.183 kN/m²
Imposed load Qkux=1.5 kN/m²

Analysis results

Unfactored dead shear Rudlhe=Gk*L/2=0.91568 kN
Unfactored imposed shear Ruilhe=Qk*L/2=2.7 kN
Shear force Fve=(Gk+Qk)*L/2=3.6157 kN
Maximum span bending moment M=(Gk+Qk)*L^2/8=5.4235 kNm
Duration of loading K3=1.25
Depth factor K7=(300/d)^0.11=1.0456
Width modification factor K14=(300/h)^0.11=1.0456

No of spans which ply is continuous over plycon=3
Transverse stresses and deflection to be based on the clear span of ply.

Rolling shear stress at ply/joist interface (position B)

Web to flange connection is to be by glueing.
Since Eayfa ≥ Eayfb (4.9686E9 ≥ 3.1897E9) the 1st moment of area of the top flange is greater than the 1st moment of area of the bottom flange. Rolling shear will be more critical at the top ply

1st moment of area of critical flange Earoll=Eayfa=4.9686E9 Nmm
Rolling shear stress @ position B torB=Fve*1E3*Earoll/EIx/conwid
=0.31024 N/mm²
Plywood is to be adhered to timber using nails or staples as the bonding pressure. Mod factor K70=0.9
Since rollp ≥ torB (0.76106 ≥ 0.31024) the applied rolling shear is less than the permissible shear. Hence OK.
Length of bearing lb=100 mm
From BS5268-2 Table 18, bearing is < 75 mm from joist end.
Bearing Modification factor K4=1.0

Stresses due to bending action

DESIGN SUMMARY	**Compress @ Top face of top ply**	**1.7859 N/mm²**
	Perm Compress stress in top ply	**11.138 N/mm²**
	Bending in joist @ joist/top ply	**3.9211 N/mm²**
	Bending in joist @ joist/btm ply	**5.5872 N/mm²**
	Perm bending stress in joist	**10.783 N/mm²**
	Tension @ btm face of btm ply	**2.1298 N/mm²**
	Perm tension stress in btm ply	**20.25 N/mm²**
	Bending stress in top ply spanning between timber joist	**0.76256 N/mm²**
	Perm ply bending stress	**21.425 N/mm²**
	Transverse deflection of top ply	**0.31564 mm**
	Permissible transverse deflection	**1.659 mm**
	Deflection of composite section	**17.533 mm**
	Limiting deflection of comp sect	**18 mm**
	Lateral shear @ neutral axis	**0.41804 N/mm²**
	Permiss.lateral shear in joist	**0.97625 N/mm²**
	Ply flange to joist shear stress	**0.31024 N/mm²**
	Permissible rolling shear in ply	**0.76106 N/mm²**
	Bearing stress on ply	**0.060261 N/mm²**
	Permissible ply bearing stress	**4.9125 N/mm²**
	Bearing stress on joist	**0.76929 N/mm²**
	Permissible joist bearing stress	**3.3 N/mm²**

Location: Stressed skin floor joists

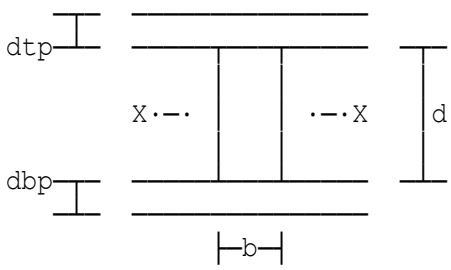

Glued stressed skin floor joist

with top and bottom ply sheathing

to BS5268-2:2002

Depth of timber joist section d=150 mm
Width of timber joist section b=50 mm
Nominal depth of top ply dtp'=15.5 mm
Nominal depth of bottom ply dbp'=9.5 mm
Plywood face grain is parallel to span of floor joist.

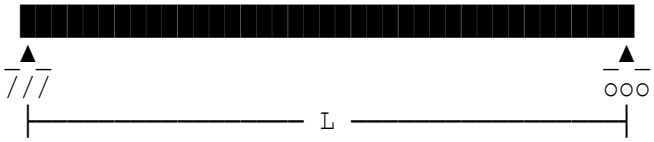

Joist span L=3.6 m
Centres of joists crs=360 mm
Effective width of top flange ewidth=360 mm

Grade stresses

Strength class C24 to Table 8.
User defined plywood grade stresses.
Minimum thickness of top ply dtp=15 mm
Minimum thickness of bottom ply dbp=9 mm
Bending: grain ⊥ to ply span pbperd=4.73 N/mm²
Compress // to face grain pcparg=8.13 N/mm²
Compress ⊥ to face grain pcperd=3.84 N/mm²
Rolling shear prolls=0.51 N/mm²
Face grain // to span Empar=3150 N/mm²
Face grain ⊥ to ply span Ebper=1055 N/mm²
Panel shear modulus of rigidity Gw=255 N/mm²
Tension // to face grain ptbparg=4.97 N/mm²
Face grain // to the span Embpar=2920 N/mm²
Bearing stress on ply face beargs=2.16 N/mm²
Timber service class adopted tmclass=1
Timber service class modification factor K2=1 as Table 16
Member is not in a load-sharing system as defined by Clause 13.
Load-sharing modification factor K8=1.0

Loading - UDL

Density of top ply	gamtply=8.91 kg/m²
Density of bottom ply	gambply=4.3 kg/m²
Other dead UDL	Gkux'=0.1 kN/m²
Imposed load	Qkux=1.75 kN/m²

Analysis results

Unfactored dead shear	Rudlhe=Gk*L/2=0.20816 kN
Unfactored imposed shear	Ruilhe=Qk*L/2=1.134 kN
Shear force	Fve=(Gk+Qk)*L/2=1.3422 kN
Maximum span bending moment	M=(Gk+Qk)*L^2/8=1.2079 kNm
Duration of loading	K3=1.5
Depth factor	K7=(300/d)^0.11=1.0792
Width modification factor	K14=(300/h)^0.11=1.0792

No of spans which ply is continuous over plycon=2
Transverse stresses and deflection to be based on the effective

Rolling shear stress at ply/joist interface (position B)

Web to flange connection is to be by glueing.
Since Eayfa ≥ Eayfb (1.2657E9 ≥ 828.69E6) the 1st moment of area of the top flange is greater than the 1st moment of area of the bottom flange. Rolling shear will be more critical at the top ply

1st moment of area of critical flange Earoll=Eayfa=1.2657E9 Nmm
Rolling shear stress @ position B torB=Fve*1E3*Earoll/EIx/conwid
=0.12494 N/mm²
Plywood is to be adhered to timber using clamps under pressure.
Bonding pressure Mod factor K70=1.0
Since rollp ≥ torB (0.3825 ≥ 0.12494) the applied rolling shear is less than the permissible shear. Hence OK.
Length of bearing lb=75 mm
From BS5268-2 Table 18, bearing is < 75 mm from joist end.
Bearing Modification factor K4=1.0

Stresses due to bending action

DESIGN SUMMARY	**Compress @ Top face of top ply**	**1.1461 N/mm²**
	Perm Compress stress in top ply	**12.195 N/mm²**
	Bending in joist @ joist/top ply	**2.1399 N/mm²**
	Bending in joist @ joist/btm ply	**2.6575 N/mm²**
	Perm bending stress in joist	**12.141 N/mm²**
	Tension @ btm face of btm ply	**1.1945 N/mm²**
	Perm tension stress in btm ply	**7.455 N/mm²**
	Bending stress in top ply spanning between timber joist	**0.89477 N/mm²**
	Perm ply bending stress	**7.095 N/mm²**
	Transverse deflection of top ply	**0.63376 mm**
	Permissible transverse deflection	**1.08 mm**
	Deflection of composite section	**6.4263 mm**
	Limiting deflection of comp sect	**10.8 mm**
	Lateral shear @ neutral axis	**0.20448 N/mm²**
	Permiss.lateral shear in joist	**1.065 N/mm²**
	Ply flange to joist shear stress	**0.12494 N/mm²**
	Permissible rolling shear in ply	**0.3825 N/mm²**
	Bearing stress on ply	**0.04971 N/mm²**
	Permissible ply bearing stress	**3.24 N/mm²**
	Bearing stress on joist	**0.35791 N/mm²**
	Permissible joist bearing stress	**3.6 N/mm²**

Location: Stressed skin floor joists

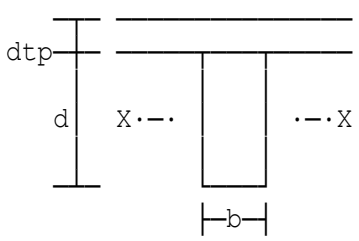

Glued stressed skin floor joist with top ply sheathing only to BS5268-2:2002

Depth of timber joist section d=225 mm
Width of timber joist section b=75 mm
Nominal depth of top ply dtp'=20.5 mm
Plywood face grain is parallel to span of floor joist.

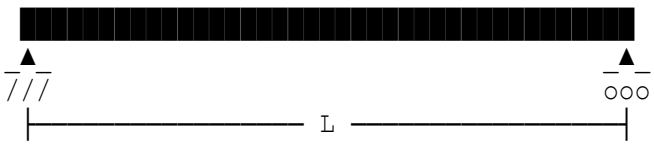

Joist span L=5.5 m
Centres of joists crs=330 mm
Effective width of top flange ewidth=330 mm

Grade stresses

Strength class C24 to Table 8.
Plywood is Canadian Douglas Fir (unsanded) to Table 45 of BS5268
Top plywood sheath comprises 7 plies.
Timber service class adopted tmclass=1
Timber service class modification factor K2=1 as Table 16
Member is in a load-sharing system as defined by Clause 13.
Load-sharing modification factor K8=1.1
The mean modulus of elasticity should be used to calculate deflections and displacements under both dead and imposed loads.

Loading - UDL

Other dead UDL Gkux'=0.10091 kN/m²
Imposed load Qkux=2.5 kN/m²

Analysis results

Unfactored dead shear Rudlhe=Gk*L/2=0.3589 kN
Unfactored imposed shear Ruilhe=Qk*L/2=2.2687 kN
Shear force Fve=(Gk+Qk)*L/2=2.6276 kN
Maximum span bending moment M=(Gk+Qk)*L^2/8=3.613 kNm
Duration of loading K3=1
Depth factor K7=(300/d)^0.11=1.0322
Width modification factor K14=(300/h)^0.11=1.0322

No of spans which ply is continuous over plycon=4
Transverse stresses and deflection to be based on the clear span of ply.

Rolling shear stress at ply/joist interface (position B)

Web to flange connection is to be by glueing.
1st moment of area of top flange Earoll=EAtf*y5=2.1779E9 Nmm
Rolling shear stress @ position B torB=Fve*1E3*Earoll/EIx/conwid
=0.07363 N/mm²
Plywood is to be adhered to timber using nails or staples as the bonding pressure. Mod factor K70=0.9
Since rollp ≥ torB (0.25245 ≥ 0.07363) the applied rolling shear is less than the permissible shear. Hence OK.
Length of bearing lb=100 mm
From BS5268-2 Table 18, bearing is < 75 mm from joist end.
Bearing Modification factor K4=1.0

Stresses due to bending action

DESIGN SUMMARY	**Compress @ Top face of top ply**	**1.2545 N/mm²**
	Perm Compress stress in top ply	**7.68 N/mm²**
	Bending in joist @ joist/top ply	**3.786 N/mm²**
	Bending in joist @ joist/btm ply	**4.6859 N/mm²**
	Perm bending stress in joist	**8.5152 N/mm²**
	Bending stress in top ply spanning between timber joist	**0.38472 N/mm²**
	Perm ply bending stress	**5.37 N/mm²**
	Transverse deflection of top ply	**0.10868 mm**
	Permissible transverse deflection	**0.765 mm**
	Deflection of composite section	**11.366 mm**
	Limiting deflection of comp sect	**14 mm**
	Lateral shear @ neutral axis	**0.21206 N/mm²**
	Permiss.lateral shear in joist	**0.781 N/mm²**
	Ply flange to joist shear stress	**0.07363 N/mm²**
	Permissible rolling shear in ply	**0.25245 N/mm²**
	Bearing stress on joist	**0.35035 N/mm²**
	Permissible joist bearing stress	**2.64 N/mm²**

Location: Stressed skin floor joists

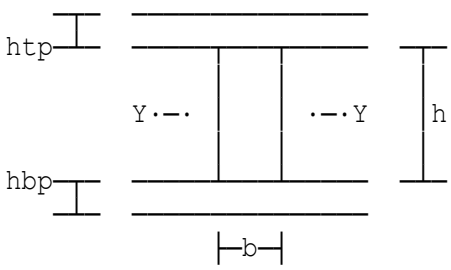

Glued stressed skin floor joist with top and bottom ply sheathing to EC5 with NA Amendment No.2

Depth of timber joist section h=200 mm
Width of timber joist section b=63 mm
Nominal depth of top ply htp'=22.5 mm
Nominal depth of bottom ply hbp'=12.5 mm
Plywood surface grain is perpendicular to span of floor joist.

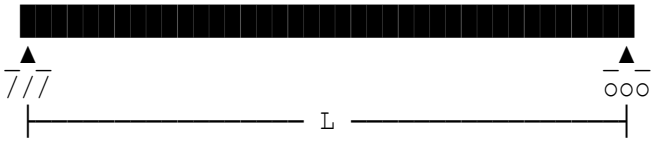

Joist span L=5 m
Bearing length lb=100 mm
Centres of joists crs=400 mm
Effective width of top flange ewidth=400 mm

Characteristic strength properties

Timber: Based on Table 1 & 3 in BS EN 338:2016(E).
Timber strength class C24.
Plywood:
Plywood is Canadian Douglas Fir (unsanded).
Top plywood sheath comprises 7 plies.
Bottom plywood sheath comprises 4 plies.

Member is in a load-sharing system as defined in EC5 Clause 6.6.
Load-sharing modification factor ksys=1.1
The mean modulus of elasticity should be used to calculate deflections and displacements under both permanent and imposed loads.

Bending moments and shear forces

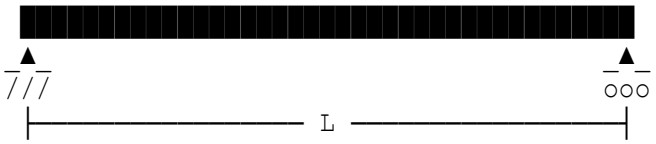

Simply supported beam subject to vertical loads.

Beam span	L=5 m
Distance from left support	Lc(1)=2.5 m
Permanent load (unfactored)	Gkc(1)=0.5 kN
Variable load 1 (unfactored)	Qca(1)=0.5 kN
Dist. from left support to start	Lau(1)=0 m
Distance from left support to end	Lbu(1)=5 m
Permanent load (unfactored)	Gku(1)=0.18 kN/m
Variable load 1 (unfactored)	Qua(1)=0.6 kN/m
DL at centre (unfactored)	Gkt(1)=0 kN/m
Variable load 1 (unfactored)	Qta(1)=0 kN/m

Characteristic values of actions

Permanent:	
Reaction at left hand end	0.70013 kN
Reaction at right hand end	0.70013 kN
Maximum span moment	Mkp=1.1877 kNm
Maximum shear force	Fkp=0.70013 kN
Variable 1:	
Reaction at left hand end	1.7501 kN
Reaction at right hand end	1.7501 kN
Maximum span moment	Mkv1=2.5002 kNm
Maximum shear force	Fkv1=1.7501 kN
Depth factor (Clause 3.2)	kh=1.0
Width modification factor	kw=(150/lardim)^0.2=0.94409
Width modification factor	kw=1.0
Bearing modification factor	kc90=1.5
Shear reduction factor	ksh=0.67

No of spans which ply is continuous over plycon=3
Transverse stresses and deflection to be based on the clear span of ply.

Permanent udl load on floor	Gudl=0.45 kN/m²
Variable udl load on floor	Qudl=1.5 kN/m²
Permanent max point load on floor	Gpl=0.5 kN
Variable max point load on floor	Qpl=0.5 kN

Rolling shear stress at sheathing/joist interface (position B)

Web to flange connection is to be by glueing.
Since Eayfa ≥ Eayfb (3.2451E9 ≥ 2.5475E9) the 1st moment of area of the top flange is greater than the 1st moment of area of the bottom flange. Rolling shear will be more critical at the top sheathing.
1st moment of area of critical flange Earoll=Eayfa=3.2451E9 Nmm
Design rolling shear stress at B:
Since pfvrd ≥ psvrd (0.85067 ≥ 0.16814) the design rolling shear stress is less than the design shear strength. Hence OK.

Design Stresses due to bending

DESIGN SUMMARY	**Compress @ top face of top ply**	**1.9924 N/mm²**
	Design compr.strength in top ply	**5.6667 N/mm²**
	Bending in joist @ joist/top ply	**5.1132 N/mm²**
	Bending in joist @ joist/btm ply	**5.6552 N/mm²**
	Design bending strength in joist	**16.246 N/mm²**
	Tension @ btm face of btm ply	**2.7382 N/mm²**
	Design tension strength (btm ply)	**4.2667 N/mm²**
	Design bending stress in top ply spanning between timber joist	**1.0728 N/mm²**
	Design ply bending strength	**16.867 N/mm²**
	Transverse deflection of top ply	**0.054869 mm**
	Allowable transverse deflection	**1.011 mm**
	Deflection of composite section	**14.033 mm**
	Limiting deflection of comp.sect	**20 mm**
	Lateral shear @ neutral axis	**0.33006 N/mm²**
	Lateral shear strength in joist	**1.8142 N/mm²**
	Ply flange to joist shear stress	**0.16814 N/mm²**
	Rolling shear strength of ply	**0.85067 N/mm²**
	Bearing stress on ply	**0.089258 N/mm²**
	Design ply bearing strength	**1.44 N/mm²**
	Bearing stress on joist	**0.56672 N/mm²**
	Design bearing strength of joist	**2.5385 N/mm²**

Location: Stressed skin floor joists

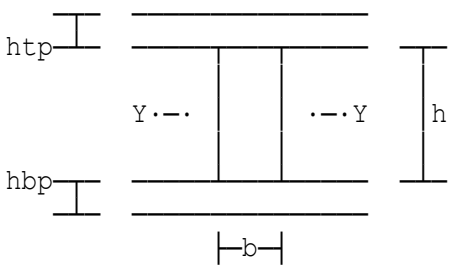

Glued stressed skin floor joist with top and bottom ply sheathing to EC5 with NA Amendment No.2

Depth of timber joist section h=200 mm
Width of timber joist section b=47 mm
Nominal depth of top ply htp'=24 mm
Nominal depth of bottom ply hbp'=12 mm
Plywood surface grain is perpendicular to span of floor joist.

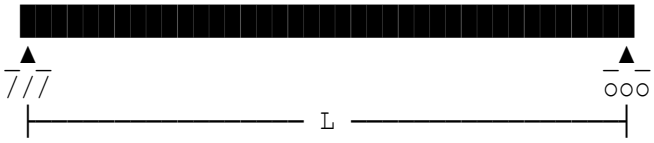

Joist span L=6 m
Bearing length lb=100 mm
Centres of joists crs=600 mm
Effective width of top flange ewidth=600 mm

Characteristic strength properties

Timber: Based on Table 1 & 3 in BS EN 338:2016(E).
Timber strength class C24.
Plywood:
Plywood is Finnish Birch-faced (sanded).
Top plywood sheath comprises 17 plies.
Bottom plywood sheath comprises 9 plies.

Member is in a load-sharing system as defined in EC5 Clause 6.6.
Load-sharing modification factor ksys=1.1
The mean modulus of elasticity should be used to calculate deflections and displacements under both permanent and imposed loads.

Bending moments and shear forces

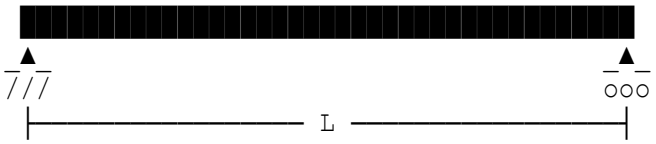

Simply supported beam subject to vertical loads.

Beam span	L=6 m
Dist. from left support to start	Lau(1)=0 m
Distance from left support to end	Lbu(1)=6 m
Permanent load (unfactored)	Gku(1)=0.24 kN/m
Variable load 1 (unfactored)	Qua(1)=0.9 kN/m

Characteristic values of actions

Permanent:	
Reaction at left hand end	0.72 kN
Reaction at right hand end	0.72 kN
Maximum span moment	Mkp=1.08 kNm
Maximum shear force	Fkp=0.72 kN
Variable 1:	
Reaction at left hand end	2.7 kN
Reaction at right hand end	2.7 kN
Maximum span moment	Mkv1=4.05 kNm
Maximum shear force	Fkv1=2.7 kN
Depth factor (Clause 3.2)	kh=1.0
Width modification factor	kw=(150/lardim)^0.2=0.94409
Width modification factor	kw=1.0
Bearing modification factor	kc90=1.5
Shear reduction factor	ksh=0.67

No of spans which ply is continuous over plycon=3
Transverse stresses and deflection to be based on the clear span of ply.

Permanent udl load on floor	Gudl=0.45 kN/m²
Variable udl load on floor	Qudl=1.5 kN/m²

Rolling shear stress at sheathing/joist interface (position B)

Web to flange connection is to be by glueing.
Since Eayfa ≥ Eayfb (10E9 ≥ 7.3847E9) the 1st moment of area of the top flange is greater than the 1st moment of area of the bottom flange. Rolling shear will be more critical at the top sheathing.
1st moment of area of critical flange Earoll=Eayfa=10E9 Nmm
Design rolling shear stress at B:
Since pfvrd ≥ psvrd (1.9213 ≥ 0.47579) the design rolling shear stress is less than the design shear strength. Hence OK.

Design Stresses due to bending

DESIGN SUMMARY	**Compress @ top face of top ply**	**2.7657 N/mm²**
	Design compr.strength in top ply	**16.673 N/mm²**
	Bending in joist @ joist/top ply	**2.7563 N/mm²**
	Bending in joist @ joist/btm ply	**4.623 N/mm²**
	Design bending strength in joist	**16.246 N/mm²**
	Tension @ btm face of btm ply	**3.7474 N/mm²**
	Design tension strength (btm ply)	**23.333 N/mm²**
	Design bending stress in top ply spanning between timber joist	**1.0848 N/mm²**
	Design ply bending strength	**25.933 N/mm²**
	Transverse deflection of top ply	**0.14033 mm**
	Allowable transverse deflection	**1.659 mm**
	Deflection of composite section	**15.114 mm**
	Limiting deflection of comp.sect	**24 mm**
	Lateral shear @ neutral axis	**0.54443 N/mm²**
	Lateral shear strength in joist	**1.8142 N/mm²**
	Ply flange to joist shear stress	**0.47579 N/mm²**
	Rolling shear strength of ply	**1.9213 N/mm²**
	Bearing stress on ply	**0.0837 N/mm²**
	Design ply bearing strength	**2.62 N/mm²**
	Bearing stress on joist	**1.0685 N/mm²**
	Design bearing strength of joist	**2.5385 N/mm²**

Location: Stressed skin floor joists

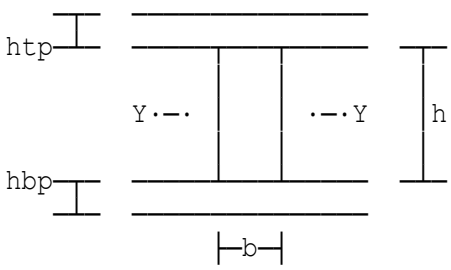

Glued stressed skin floor joist with top and bottom ply sheathing to EC5 with NA Amendment No.2

Depth of timber joist section h=150 mm
Width of timber joist section b=50 mm
Nominal depth of top ply htp'=15.5 mm
Nominal depth of bottom ply hbp'=9.5 mm
Plywood surface grain is parallel to span of floor joist.

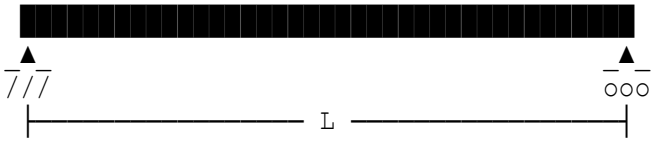

Joist span L=3.6 m
Bearing length lb=75 mm
Centres of joists crs=360 mm
Effective width of top flange ewidth=360 mm

Characteristic strength properties

Timber: Based on Table 1 & 3 in BS EN 338:2016(E).
Timber strength class C24.
Plywood:
User defined sheathing strength properties.

Minimum thickness of top ply	htp=15 mm
Minimum thickness of bottom ply	hbp=9 mm
Bending: grain ⊥ to ply span	pfm90k=15 N/mm²
Compression // to face grain	pfc0k=25 N/mm²
Compression ⊥ to face grain	pfc90k=24 N/mm²
Rolling shear	pfvrk=3.3 N/mm²
Surface grain // to span	Empar=3150 N/mm²
Surface grain ⊥ to ply span	Ebper=1055 N/mm²
Panel shear modulus of rigidity	Gw=255 N/mm²
Tension // to face grain	pbft0k=10 N/mm²
Surface grain // to the span	Embpar=2920 N/mm²
Bearing stress on sheathing face	beargs=2.16 N/mm²

The mean modulus of elasticity should be used to calculate deflections and displacements under both permanent and imposed loads.
Timber modulus of elasticity Et=E0mean=11000 N/mm²
Member is not in a load-sharing system as defined in EC5 Clause 6.6.
Load-sharing modification factor ksys=1.0

Bending moments and shear forces

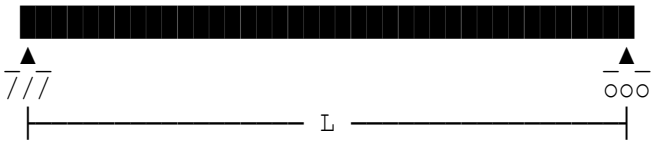

Simply supported beam subject to vertical loads.

Beam span	L=3.6 m
Dist. from left support to start	Lau(1)=0 m
Distance from left support to end	Lbu(1)=3.6 m
Permanent load (unfactored)	Gku(1)=0.108 kN/m
Variable load 1 (unfactored)	Qua(1)=0.63 kN/m

Characteristic values of actions

Permanent:	
Reaction at left hand end	0.1944 kN
Reaction at right hand end	0.1944 kN
Maximum span moment	Mkp=0.17496 kNm
Maximum shear force	Fkp=0.1944 kN
Variable 1:	
Reaction at left hand end	1.134 kN
Reaction at right hand end	1.134 kN
Maximum span moment	Mkv1=1.0206 kNm
Maximum shear force	Fkv1=1.134 kN
Depth factor (Clause 3.2)	kh=1.0
Width modification factor	kw=(150/lardim)^0.2=1
Bearing modification factor	kc90=1.5
Shear reduction factor	ksh=0.67

No of spans which ply is continuous over plycon=2
Transverse stresses and deflection to be based on the effective

Permanent udl load on floor	Gudl=0.3 kN/m²
Variable udl load on floor	Qudl=1.73 kN/m²

Rolling shear stress at sheathing/joist interface (position B)

Web to flange connection is to be by glueing.
Since Eayfa ≥ Eayfb (1.3017E9 ≥ 808.67E6) the 1st moment of area of the top flange is greater than the 1st moment of area of the bottom flange. Rolling shear will be more critical at the top sheathing.
1st moment of area of critical flange Earoll=Eayfa=1.3017E9 Nmm
Design rolling shear stress at B:
Since pfvrd ≥ psvrd (2.475 ≥ 0.15644) the design rolling shear stress is less than the design shear strength. Hence OK.

DESIGN SUMMARY

Design Stresses due to bending

Compress @ top face of top ply	1.4314 N/mm²
Design compr.strength in top ply	18.75 N/mm²
Bending in joist @ joist/top ply	4.1062 N/mm²
Bending in joist @ joist/btm ply	4.8172 N/mm²
Design bending strength in joist	16.615 N/mm²
Tension @ btm face of btm ply	1.4209 N/mm²
Design tension strength (btm ply)	7.5 N/mm²
Design bending stress in top ply spanning between timber joist	1.296 N/mm²
Design ply bending strength	11.25 N/mm²
Transverse deflection of top ply	0.62114 mm
Allowable transverse deflection	1.08 mm
Deflection of composite section	8.9037 mm
Limiting deflection of comp.sect	14.4 mm
Lateral shear @ neutral axis	0.3139 N/mm²
Lateral shear strength in joist	1.8554 N/mm²
Ply flange to joist shear stress	0.15644 N/mm²
Rolling shear strength of ply	2.475 N/mm²
Bearing stress on ply	0.07272 N/mm²
Design ply bearing strength	1.62 N/mm²
Bearing stress on joist	0.52358 N/mm²
Design bearing strength of joist	2.5962 N/mm²

Location: Stressed skin floor joists

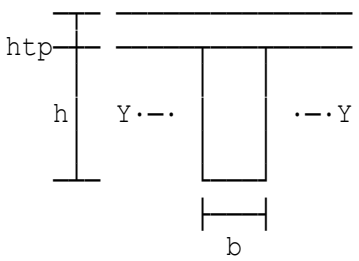

Glued stressed skin floor joist with only top ply sheathing to EC5 with NA Amendment No.2

Depth of timber joist section h=225 mm
Width of timber joist section b=75 mm
Nominal depth of top ply htp'=20.5 mm
Plywood surface grain is parallel to span of floor joist.

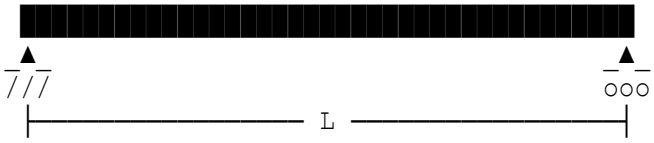

Joist span L=5.5 m
Bearing length lb=100 mm
Centres of joists crs=330 mm
Effective width of top flange ewidth=330 mm

Characteristic strength properties

Timber: Based on Table 1 & 3 in BS EN 338:2016(E).
Timber strength class C24.
Plywood:
Plywood is Canadian Douglas Fir (unsanded).
Top plywood sheath comprises 7 plies.

Member is in a load-sharing system as defined in EC5 Clause 6.6.
Load-sharing modification factor ksys=1.1
The mean modulus of elasticity should be used to calculate deflections and displacements under both permanent and imposed loads.

Bending moments and shear forces

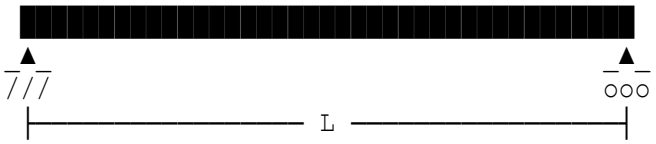

Simply supported beam subject to vertical loads.

Beam span	L=5.5 m
Dist. from left support to start	Lau(1)=0 m
Distance from left support to end	Lbu(1)=5.5 m
Permanent load (unfactored)	Gku(1)=0.099 kN/m
Variable load 1 (unfactored)	Qua(1)=0.8415 kN/m

Characteristic values of actions

Permanent:	
Reaction at left hand end	0.27225 kN
Reaction at right hand end	0.27225 kN
Maximum span moment	Mkp=0.37434 kNm
Maximum shear force	Fkp=0.27225 kN
Variable 1:	
Reaction at left hand end	2.3141 kN
Reaction at right hand end	2.3141 kN
Maximum span moment	Mkv1=3.1819 kNm
Maximum shear force	Fkv1=2.3141 kN
Depth factor (Clause 3.2)	kh=1.0
Width modification factor	kw=(150/lardim)^0.2=0.92211
Width modification factor	kw=1.0
Bearing modification factor	kc90=1.5
Shear reduction factor	ksh=0.67

No of spans which ply is continuous over plycon=4
Transverse stresses and deflection to be based on the clear span of ply.

Permanent udl load on floor	Gudl=0.3 kN/m²
Variable udl load on floor	Qudl=2.5 kN/m²

Rolling shear stress at sheathing/joist interface (position B)

Web to flange connection is to be by glueing.
1st moment of area of top flange Earoll=EAtf*y5=3.9816E9 Nmm
Design rolling shear stress at B:
Since pfvrd ≥ psvrd (0.7315 ≥ 0.16019) the design rolling shear stress is less than the design shear strength. Hence OK.

Design Stresses due to bending

DESIGN SUMMARY	**Compress @ top face of top ply**	**2.7507 N/mm²**
	Design compr.strength in top ply	**9.1 N/mm²**
	Bending in joist @ joist/top ply	**4.1554 N/mm²**
	Bending in joist @ joist/btm ply	**6.1133 N/mm²**
	Design bending strength in joist	**14.215 N/mm²**

Design bending stress in top ply spanning between timber joist	**0.55207 N/mm²**
Design ply bending strength	**6.3583 N/mm²**
Transverse deflection of top ply	**0.052547 mm**
Allowable transverse deflection	**0.765 mm**
Deflection of composite section	**14.768 mm**
Limiting deflection of comp.sect	**22 mm**
Lateral shear @ neutral axis	**0.29777 N/mm²**
Lateral shear strength in joist	**1.5874 N/mm²**
Ply flange to joist shear stress	**0.16019 N/mm²**
Rolling shear strength of ply	**0.7315 N/mm²**
Bearing stress on joist	**0.51183 N/mm²**
Design bearing strength of joist	**2.2212 N/mm²**

Location: Stressed skin floor joists

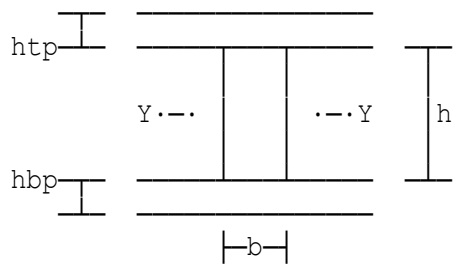

Glued stressed skin floor joist with top and bottom OSB sheathing to EC5 with NA Amendment No.2

Depth of timber joist section h=160 mm
Width of timber joist section b=47 mm
Actual depth of top OSB htp'=16 mm
Actual depth of bottom OSB hbp'=11 mm
The OSB surface grain is parallel to span of floor joist.

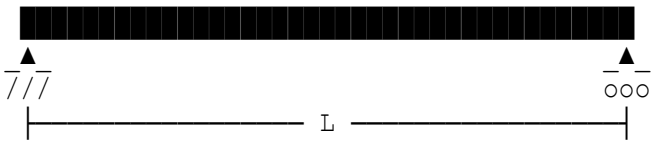

Joist span L=3.6 m
Bearing length lb=75 mm
Centres of joists crs=360 mm
Effective width of top flange ewidth=360 mm

Characteristic strength properties

Timber: Based on Table 1 & 3 in BS EN 338:2016(E).
Timber strength class C24.
Oriented Strand Board (OSB):
Oriented strand board of Grade 3 (OSB/3) to BS EN12369-1:2001 and BS EN300:1997.
Oriented strand board will be of service class 1.
User defined sheathing strength properties.

Bending: grain ⊥ to OSB span	pfm90k=8.2 N/mm²
Compression // to face grain	pfc0k=15.4 N/mm²
Compression ⊥ to face grain	pfc90k=12.7 N/mm²
Rolling shear	pfvrk=1 N/mm²
Surface grain // to span	Empar=3800 N/mm²
Surface grain ⊥ to OSB span	Ebper=4930 N/mm²
Panel shear modulus of rigidity	Gw=50 N/mm²
Tension // to face grain	pbft0k=9.4 N/mm²
Surface grain // to the span	Embpar=3800 N/mm²
Bearing stress on sheathing face	beargs=2.16 N/mm²

Member is in a load-sharing system as defined in EC5 Clause 6.6.
Load-sharing modification factor ksys=1.1
The mean modulus of elasticity should be used to calculate deflections and displacements under both permanent and imposed loads.

Bending moments and shear forces

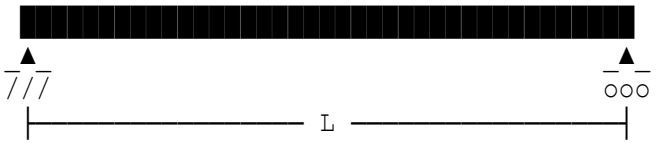

Simply supported beam subject to vertical loads.

Beam span	L=3.6 m
Dist. from left support to start	Lau(1)=0 m
Distance from left support to end	Lbu(1)=3.6 m
Permanent load (unfactored)	Gku(1)=0.108 kN/m
Variable load 1 (unfactored)	Qua(1)=0.63 kN/m

Characteristic values of actions

Permanent:	
Reaction at left hand end	0.1944 kN
Reaction at right hand end	0.1944 kN
Maximum span moment	Mkp=0.17496 kNm
Maximum shear force	Fkp=0.1944 kN
Variable 1:	
Reaction at left hand end	1.134 kN
Reaction at right hand end	1.134 kN
Maximum span moment	Mkv1=1.0206 kNm
Maximum shear force	Fkv1=1.134 kN
Depth factor (Clause 3.2)	kh=1.0
Width modification factor	kw=(150/lardim)^0.2=0.98718
Width modification factor	kw=1.0
Bearing modification factor	kc90=1.5
Shear reduction factor	ksh=0.67

No of spans which OSB is continuous over plycon=4
Transverse stresses and deflection to be based on the clear span of OSB.

Permanent udl load on floor	Gudl=0.3 kN/m²
Variable udl load on floor	Qudl=1.73 kN/m²

Rolling shear stress at sheathing/joist interface (position B)

Web to flange connection is to be by glueing.
Since Eayfa ≥ Eayfb (1.8092E9 ≥ 1.367E9) the 1st moment of area of the top flange is greater than the 1st moment of area of the bottom flange. Rolling shear will be more critical at the top sheathing.
1st moment of area of critical flange Earoll=Eayfa=1.8092E9 Nmm
Design rolling shear stress at B:
Since pfvrd ≥ psvrd (0.825 ≥ 0.16677) the design rolling shear stress is less than the design shear strength. Hence OK.

Design Stresses due to bending

DESIGN SUMMARY	**Compress @ top face of top OSB**	**1.3433 N/mm²**
	Design compr.strength in top OSB	**11.55 N/mm²**
	Bending in joist @ joist/top OSB	**3.2022 N/mm²**
	Bending in joist @ joist/btm OSB	**3.6607 N/mm²**
	Design bending strength in joist	**18.277 N/mm²**
	Tension @ btm face of btm OSB	**1.4276 N/mm²**
	Design tension strength (btm OSB)	**7.05 N/mm²**
	Design bending stress in top OSB spanning between timber joist	**0.83398 N/mm²**
	Design OSB bending strength	**6.15 N/mm²**
	Transverse deflection of top OSB	**0.086474 mm**
	Allowable transverse deflection	**0.939 mm**
	Deflection of composite section	**12.134 mm**
	Limiting deflection of comp.sect	**14.4 mm**
	Lateral shear @ neutral axis	**0.29959 N/mm²**
	Lateral shear strength in joist	**2.0409 N/mm²**
	Ply flange to joist shear stress	**0.16677 N/mm²**
	Rolling shear strength of OSB	**0.825 N/mm²**
	Bearing stress on OSB	**0.07272 N/mm²**
	Design OSB bearing strength	**1.62 N/mm²**
	Bearing stress on joist	**0.557 N/mm²**
	Design bearing strength of joist	**2.8558 N/mm²**

Location: Howe truss on grid line D

Span of truss	L=8 m
Effective height of truss	H=2 m
Top chord node point loading	W=9 kN
Bottom chord node point loading	Wc=2 kN

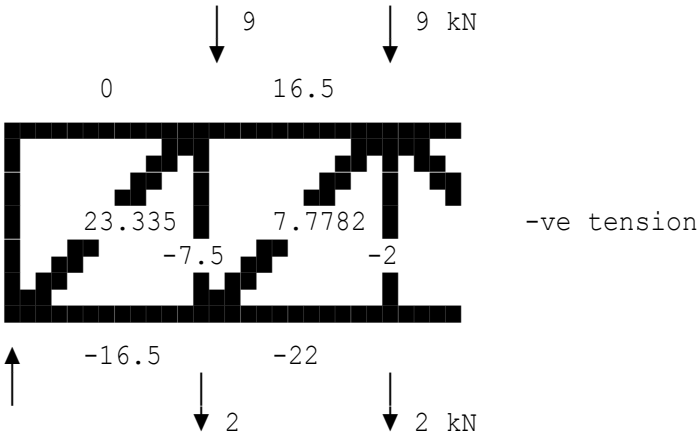

-ve tension

Deflection of frame by strain energy unit load method 0.0063373 m

Empirical value def1=L^2/(4290*H)*(L/26.6+1)
=0.0097026 m

Location: Pratt truss on grid line D

Axial loading coefficients for truss

The coefficients of axial loading are based on tables given in the 'Timber Designers' Manual' by Ozelton and Baird.

Four-panel Pratt truss

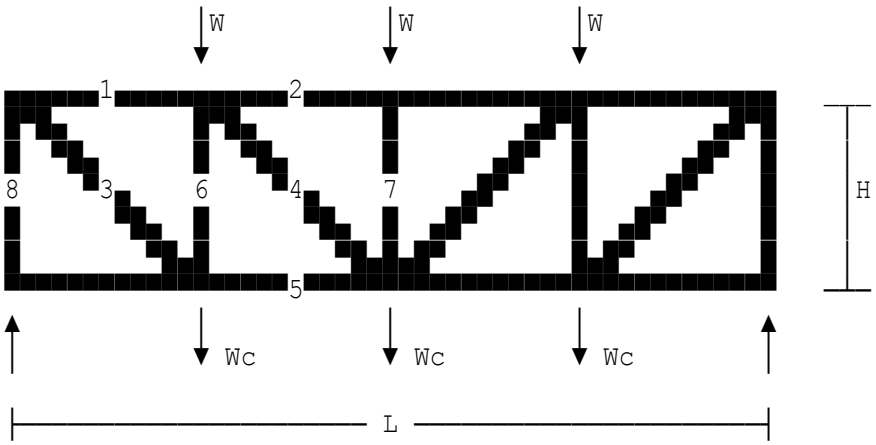

Span of truss	L=8 m
Effective height of truss	H=2 m
Top chord node point loading	W=12 kN
Bottom chord node point loading	Wc=4 kN

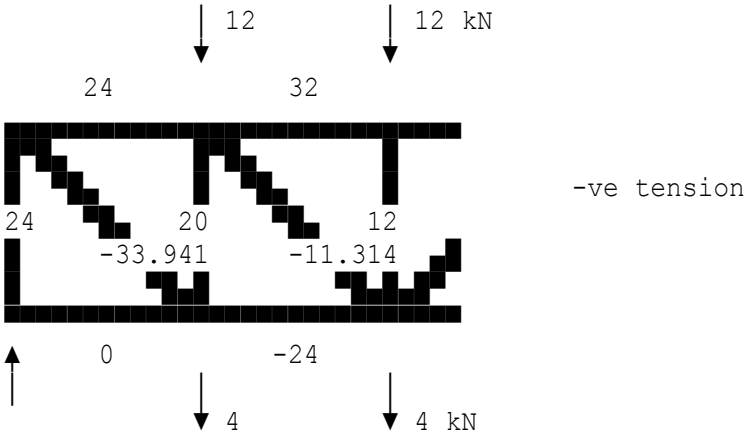

Central deflection of frame

Applying a unit load at the central node of the frame and

using the strain energy formula, deflection = $\Sigma \left[\frac{FUL}{AE} \right]$

Member	Load	Unit	Length	Area	Modulus	Symmetry	FUL/AE
1	24	0.5	2	11280	5.98	2	0.71159E-3
2	32	1	2	11280	5.98	2	0.0018976
3	-33.9	-0.7	2.828	11280	5.98	2	0.0020127
4	-11.3	-0.7	2.828	11280	5.98	2	0.6709E-3
5	-24	-0.5	2	11280	5.98	2	0.71159E-3
6	20	0.5	2	11280	5.98	2	0.59299E-3
7	12	1	2	11280	5.98	2	0.71159E-3
8	24	0.5	2	11280	5.98	2	0.71159E-3

Deflection of frame under applied loading 0.0080205 m
Empirical value def1=L^2/(4290*H)*(L/26.6+1)
=0.0097026 m

Location: Fink truss on grid line D

Span of truss L=6 m
Rafter point load W=7.6 kN
Slope of roof theta'=21.8°

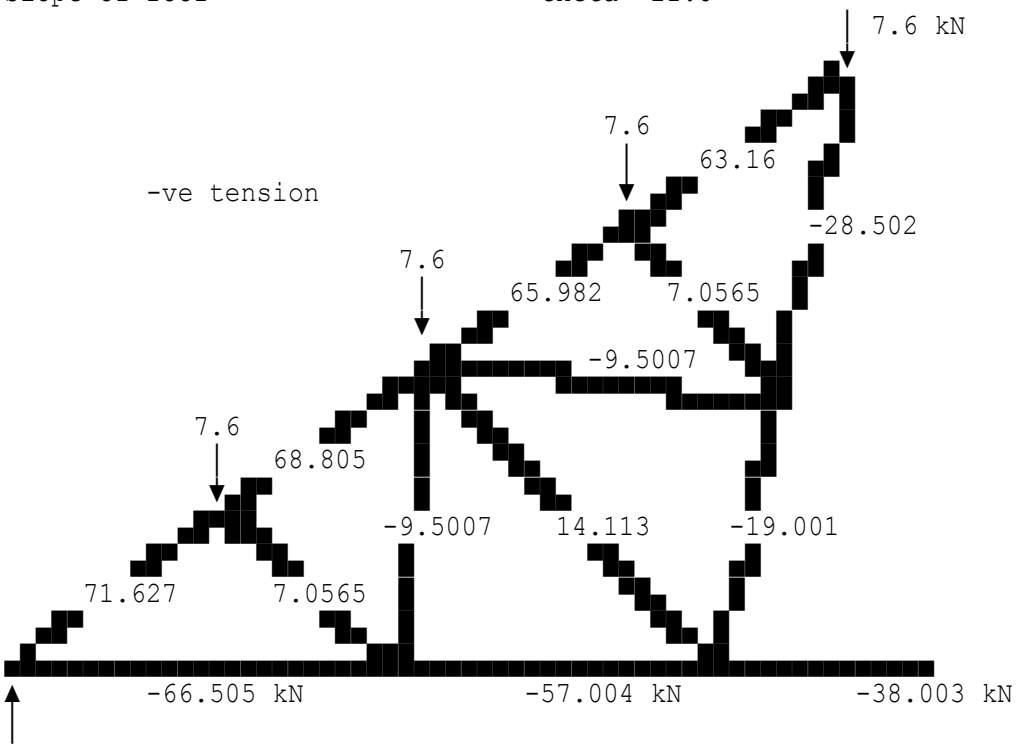

Deflection of frame under applied loading 0.01444 m

Location: Wall Panel Grid Line A/2

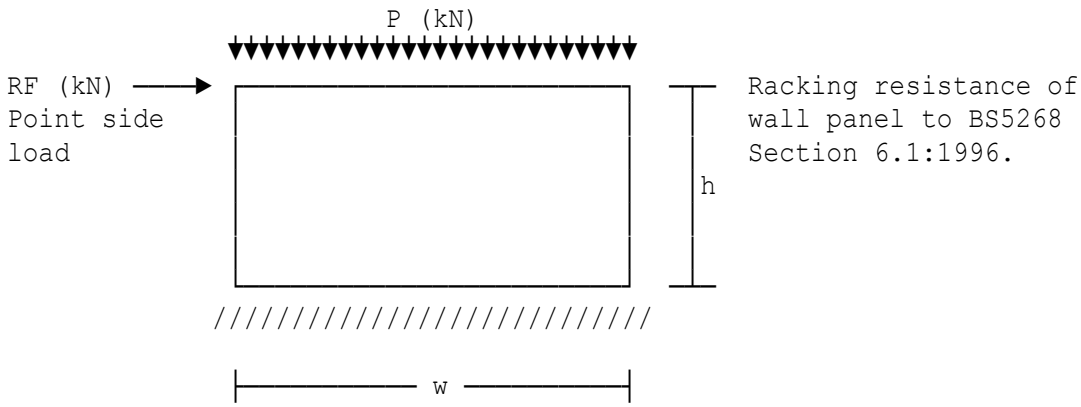

Panel assumed to be supported along full length of base sole plate and laterally restrained perpendicular to plane of racking.

Height of panel	h=2500 mm
Total width of panel	w=3000 mm
Applied load at top of panel	RF=4 kN
Applied vertical load	P=5.01 kN

Wall panel comprises C16 stress grade studs with Canadian Douglas Fir plywood sheathing.

Ply sheathing thickness	pst=9.5 mm

Racking resistance

Nail diameter	Dn=3 mm
Nail spacing	Sp=150 mm

Permissible racking shear load taking into account all modification factors of BS5268:Section 6.1:1996 for ply and OSB sheathing is given by the following equation:

PRS=1680*K101*K102*K103*K104*K105*K106*K107*K108=2198.9 N/m

Permissible racking shear load per metre for 9.5 mm sheathing with 3 mm diameter, 50 mm long round wire nails at 150 mm centres along the full perimeter of the panel is 2198.9 N/m.

Since applied shear load (1333.3 N/m) is less than permissible shear load (2198.9 N/m) then panel is adequate.

Over-turning checks

Density of sheathing	mass=5.5 kg/m²
Stud width	b=75 mm
Stud depth	d=100 mm
Stud centres	scrs=400 mm
FOS against overturning	FOS=1.33
Density of stud timber	dstud'=370 kg/m³
Overall weight of panel	panow=stud+ow=1.0798 kN
Combined vertical load	cvl=P+panow=6.0898 kN

Restoring moment due to vert.load RM=cvl*w/2000=9.1347 kNm
Applied over-turning moment 10 kNm
Factor of safety to overturning OTFOS=RM/aotm=0.91347

DESIGN SUMMARY	**Racking shear load**	**1.3333 kN/m**
	Permiss shear load	**2.1989 kN/m**
	Applied overturning moment	**10 kNm**
	Restoring moment	**9.1347 kNm**
	Reqd uplift strap moment	**4.1653 kNm**
	Sliding load at base	**1.3333 kN/m**
	Nail diameter	**3 mm**
	Nail Length	**50 mm**
	Perimeter nail crs	**150 mm**
	Intermediate nail crs	**300 mm**
	Ply thickness	**9.5 mm**

Location:

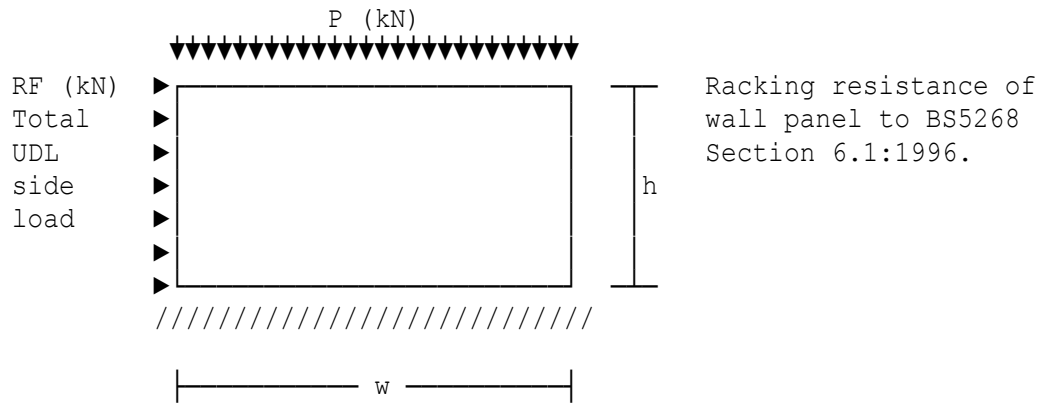

Panel assumed to be supported along full length of base sole plate and laterally restrained perpendicular to plane of racking.

Height of panel	h=2800 mm
Total width of panel	w=4000 mm
Applied load along side of panel	RF=6.01 kN
Applied vertical load	P=3.25 kN

Wall panel comprises C16 stress grade studs with British Hardwood plywood sheathing.

Ply sheathing thickness	pst=12 mm

Racking resistance

Nail diameter	Dn=3 mm
Nail spacing	Sp=150 mm

Permissible racking shear load taking into account all modification factors of BS5268:Section 6.1:1996 for ply and OSB sheathing is given by the following equation:

PRS=1680*K101*K102*K103*K104*K105*K106*K107*K108=2427.2 N/m

Permissible racking shear load per metre for 12 mm sheathing with 3 mm diameter, 65 mm long round wire nails at 150 mm centres along the full perimeter of the panel is 2427.2 N/m.

Since applied shear load (1502.5 N/m) is less than permissible shear load (2427.2 N/m) then panel is adequate.

Over-turning checks

Density of sheathing	mass=7.32 kg/m²
Stud width	b=50 mm
Stud depth	d=125 mm
Stud centres	scrs=450 mm
FOS against overturning	FOS=1.4
Density of stud timber	dstud'=370 kg/m³
Overall weight of panel	panow=stud+ow=1.537 kN
Combined vertical load	cvl=P+panow=4.787 kN

Restoring moment due to vert.load RM=cvl*w/2000=9.574 kNm
Applied over-turning moment 8.414 kNm
Factor of safety to overturning OTFOS=RM/aotm=1.1379

DESIGN SUMMARY	**Racking shear load**	**1.5025 kN/m**
	Permiss shear load	**2.4272 kN/m**
	Applied overturning moment	**8.414 kNm**
	Restoring moment	**9.574 kNm**
	Reqd uplift strap moment	**2.2056 kNm**
	Sliding load at base	**1.5025 kN/m**
	Nail diameter	**3 mm**
	Nail Length	**65 mm**
	Perimeter nail crs	**150 mm**
	Intermediate nail crs	**300 mm**
	Ply thickness	**12 mm**

Location:

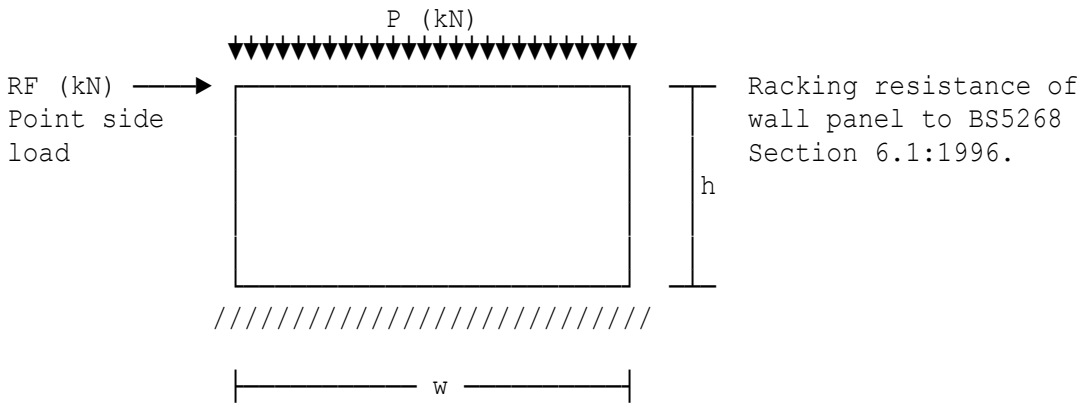

Panel assumed to be supported along full length of base sole plate and laterally restrained perpendicular to plane of racking.

Height of panel	h=4035 mm
Total width of panel	w=5050 mm
Applied load at top of panel	RF=7.12 kN
Applied vertical load	P=9.15 kN

Wall panel comprises C16 stress grade studs with American construction plywood (grade C-D or grade C-C) sheathing.

Ply sheathing thickness	pst=9 mm

Racking resistance

Nail diameter	Dn=3 mm
Nail spacing	Sp=150 mm

Permissible racking shear load taking into account all modification factors of BS5268:Section 6.1:1996 for ply and OSB sheathing is given by the following equation:

PRS=1680*K101*K102*K103*K104*K105*K106*K107*K108=2314.5 N/m

Permissible racking shear load per metre for 9 mm sheathing with 3 mm diameter, 50 mm long round wire nails at 150 mm centres along the full perimeter of the panel is 2314.5 N/m.

Since applied shear load (1409.9 N/m) is less than permissible shear load (2314.5 N/m) then panel is adequate.

Over-turning checks

Density of sheathing	mass=4.9 kg/m²
Stud width	b=97 mm
Stud depth	d=147 mm
Stud centres	scrs=600 mm
FOS against overturning	FOS=1.4
Density of stud timber	dstud'=370 kg/m³
Overall weight of panel	panow=stud+ow=3.2914 kN
Combined vertical load	cvl=P+panow=12.441 kN

Restoring moment due to vert.load RM=cvl*w/2000=31.414 kNm
Applied over-turning moment 28.729 kNm
Factor of safety to overturning OTFOS=RM/aotm=1.0935

DESIGN SUMMARY	**Racking shear load**	**1.4099 kN/m**
	Permiss shear load	**2.3145 kN/m**
	Applied overturning moment	**28.729 kNm**
	Restoring moment	**31.414 kNm**
	Reqd uplift strap moment	**8.8064 kNm**
	Sliding load at base	**1.4099 kN/m**
	Nail diameter	**3 mm**
	Nail Length	**50 mm**
	Perimeter nail crs	**150 mm**
	Intermediate nail crs	**300 mm**
	Ply thickness	**9 mm**

Location:

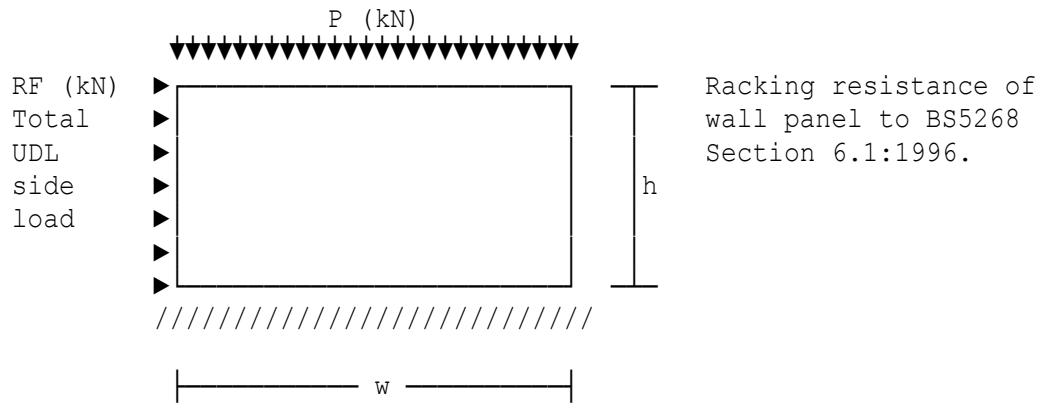

Panel assumed to be supported along full length of base sole plate and laterally restrained perpendicular to plane of racking.

Height of panel	h=2150 mm
Total width of panel	w=1800 mm
Applied load along side of panel	RF=1.57 kN
Applied vertical load	P=1.55 kN

Wall panel comprises C16 stress grade studs with Finnish Birch plywood sheathing.

Ply sheathing thickness	pst=9 mm

Racking resistance

Nail diameter	Dn=3 mm
Nail spacing	Sp=150 mm

Permissible racking shear load taking into account all modification factors of BS5268:Section 6.1:1996 for ply and OSB sheathing is given by the following equation:

PRS=1680*K101*K102*K103*K104*K105*K106*K107*K108=1604.4 N/m

Permissible racking shear load per metre for 9 mm sheathing with 3 mm diameter, 50 mm long round wire nails at 150 mm centres along the full perimeter of the panel is 1604.4 N/m.

Since applied shear load (872.22 N/m) is less than permissible shear load (1604.4 N/m) then panel is adequate.

Over-turning checks

Density of sheathing	mass=6.2 kg/m²
Stud width	b=47 mm
Stud depth	d=97 mm
Stud centres	scrs=450 mm
FOS against overturning	FOS=1.4
Density of stud timber	dstud'=370 kg/m³
Overall weight of panel	panow=stud+ow=0.46506 kN
Combined vertical load	cvl=P+panow=2.0151 kN

Restoring moment due to vert.load RM=cvl*w/2000=1.8136 kNm
Applied over-turning moment 1.6878 kNm
Factor of safety to overturning OTFOS=RM/aotm=1.0745

DESIGN SUMMARY	**Racking shear load**	**0.87222 kN/m**
	Permiss shear load	**1.6044 kN/m**
	Applied overturning moment	**1.6878 kNm**
	Restoring moment	**1.8136 kNm**
	Reqd uplift strap moment	**0.54929 kNm**
	Sliding load at base	**0.87222 kN/m**
	Nail diameter	**3 mm**
	Nail Length	**50 mm**
	Perimeter nail crs	**150 mm**
	Intermediate nail crs	**300 mm**
	Ply thickness	**9 mm**

Location:

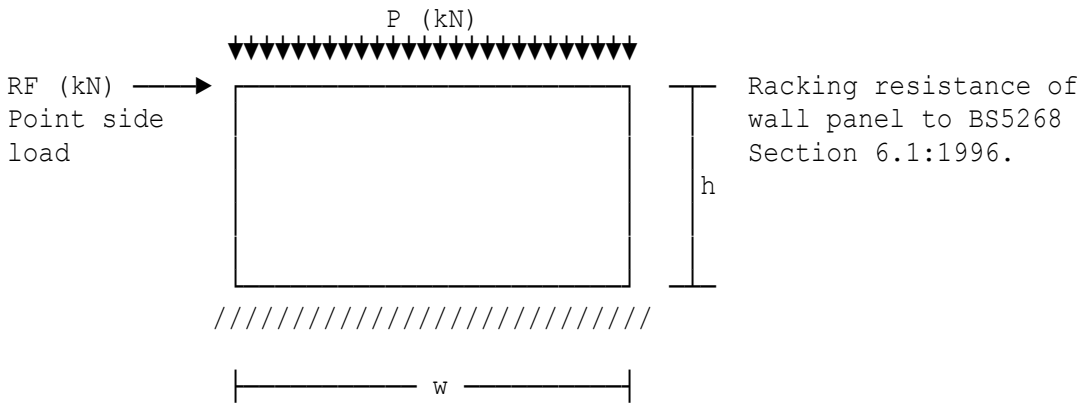

Panel assumed to be supported along full length of base sole plate and laterally restrained perpendicular to plane of racking.

Height of panel	h=6000 mm
Total width of panel	w=6750 mm
Applied load at top of panel	RF=18.5 kN
Applied vertical load	P=15.5 kN

Wall panel comprises C16 stress grade studs with Swedish Softwood Construction plywood sheathing.

Ply sheathing thickness	pst=12.5 mm

Racking resistance

Nail diameter	Dn=3 mm
Nail spacing	Sp=150 mm

Permissible racking shear load taking into account all modification factors of BS5268:Section 6.1:1996 for ply and OSB sheathing is given by the following equation:

PRS=1680*K101*K102*K103*K104*K105*K106*K107*K108=2791 N/m

Permissible racking shear load per metre for 12.5 mm sheathing with 3 mm diameter, 75 mm long round wire nails at 150 mm centres along the full perimeter of the panel is 2791 N/m.

Since applied shear load (2740.7 N/m) is less than permissible shear load (2791 N/m) then panel is adequate.

Over-turning checks

Density of sheathing	mass=5.3 kg/m²
Stud width	b=63 mm
Stud depth	d=197 mm
Stud centres	scrs=400 mm
FOS against overturning	FOS=1.4
Density of stud timber	dstud'=370 kg/m³
Overall weight of panel	panow=stud+ow=7.2123 kN
Combined vertical load	cvl=P+panow=22.712 kN

Restoring moment due to vert.load RM=cvl*w/2000=76.654 kNm
Applied over-turning moment 111 kNm
Factor of safety to overturning OTFOS=RM/aotm=0.69058

DESIGN SUMMARY	**Racking shear load**	**2.7407 kN/m**
	Permiss shear load	**2.791 kN/m**
	Applied overturning moment	**111 kNm**
	Restoring moment	**76.654 kNm**
	Reqd uplift strap moment	**78.746 kNm**
	Sliding load at base	**2.7407 kN/m**
	Nail diameter	**3 mm**
	Nail Length	**75 mm**
	Perimeter nail crs	**150 mm**
	Intermediate nail crs	**300 mm**
	Ply thickness	**12.5 mm**

Location:

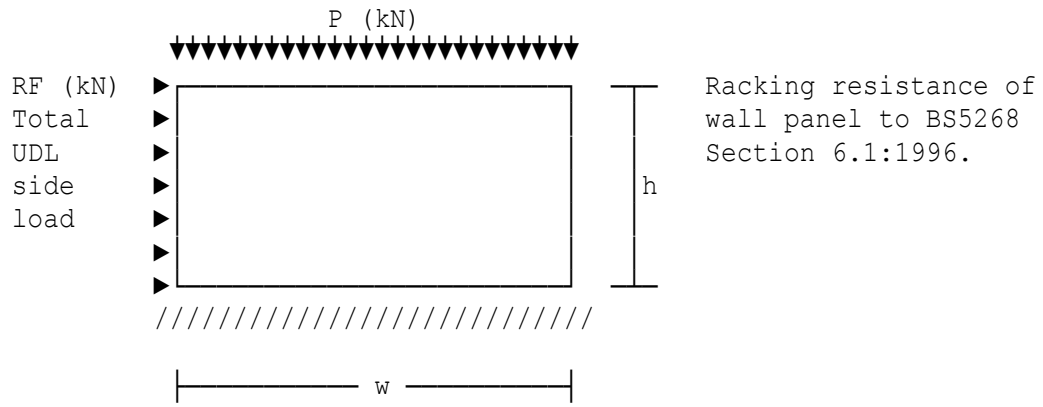

Panel assumed to be supported along full length of base sole plate and laterally restrained perpendicular to plane of racking.

Height of panel	h=5200 mm
Total width of panel	w=14600 mm
Applied load along side of panel	RF=18.528 kN
Applied vertical load	P=3.872 kN

Wall panel comprises C16 stress grade studs with Finnish Birch faced plywood sheathing.

Ply sheathing thickness	pst=8 mm

Racking resistance

Nail diameter	Dn=3 mm
Nail spacing	Sp=150 mm

Permissible racking shear load taking into account all modification factors of BS5268:Section 6.1:1996 for ply and OSB sheathing is given by the following equation:

PRS=1680*K101*K102*K103*K104*K105*K106*K107*K108=1861.8 N/m

Permissible racking shear load per metre for 8 mm sheathing with 3 mm diameter, 50 mm long round wire nails at 150 mm centres along the full perimeter of the panel is 1861.8 N/m.

Since applied shear load (1269 N/m) is less than permissible shear load (1861.8 N/m) then panel is adequate.

Over-turning checks

Density of sheathing	mass=4.9 kg/m²
Stud width	b=47 mm
Stud depth	d=175 mm
Stud centres	scrs=400 mm
FOS against overturning	FOS=1.25
Density of stud timber	dstud'=370 kg/m³
Overall weight of panel	panow=stud+ow=10.161 kN
Combined vertical load	cvl=P+panow=14.033 kN

Restoring moment due to vert.load RM=cvl*w/2000=102.44 kNm
Applied over-turning moment 48.173 kNm
Factor of safety to overturning OTFOS=RM/aotm=2.1266

DESIGN SUMMARY	**Racking shear load**	**1.269 kN/m**
	Permiss shear load	**1.8618 kN/m**
	Applied overturning moment	**48.173 kNm**
	Restoring moment	**102.44 kNm**
	FOS against overturning	**2.1266**
	Min reqd overturning FOS	**1.25**
	Sliding load at base	**1.269 kN/m**
	Nail diameter	**3 mm**
	Nail Length	**50 mm**
	Perimeter nail crs	**150 mm**
	Intermediate nail crs	**300 mm**
	Ply thickness	**8 mm**

Location:

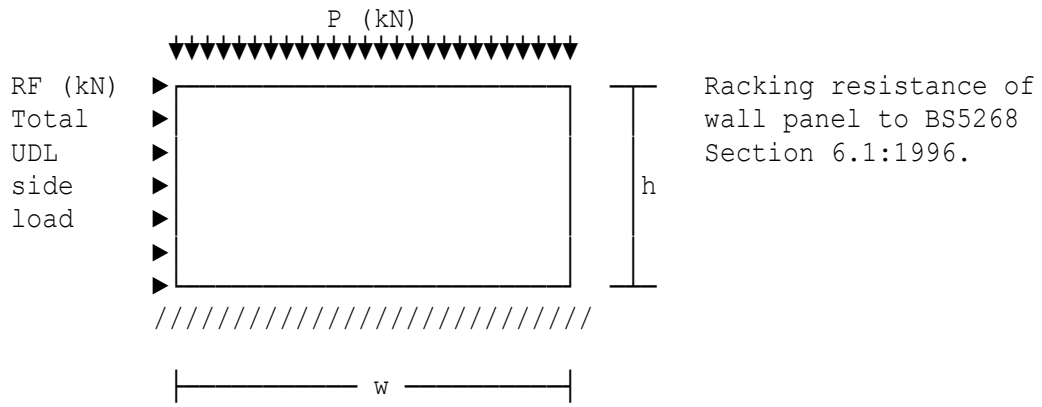

Panel assumed to be supported along full length of base sole plate and laterally restrained perpendicular to plane of racking.

Height of panel	h=3000 mm
Total width of panel	w=4100 mm
Applied load along side of panel	RF=4.912 kN
Applied vertical load	P=4.1 kN

WARNING:
Plasterboard alone should not be relied upon to provide the racking resistance of a dwelling; however plasterboard will contribute to the racking resistance if used with ply or OSB sheathing. This is outside the scope of this proforma, the user should refer to the relevant clauses of BS5268:Section 6.1:1996 (Cl.4.7.4.1 to 4.7.5).

Location:

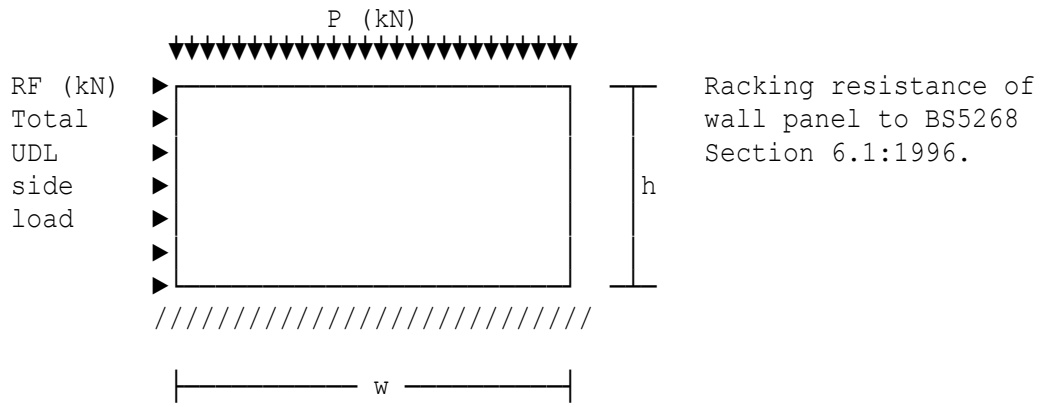

Panel assumed to be supported along full length of base sole plate and laterally restrained perpendicular to plane of racking.

Height of panel	h=3000 mm
Total width of panel	w=4100 mm
Applied load along side of panel	RF=4.912 kN
Applied vertical load	P=4.1 kN

Wall panel comprises C16 stress grade studs with Swedish Softwood Construction OSB sheathing.

OSB sheathing thickness	pst=8 mm

Racking resistance

Nail diameter	Dn=3 mm
Nail spacing	Sp=150 mm
Width of opening in wall panel	wopen=800 mm
Height of opening in wall panel	hopen=800 mm

Permissible racking shear load taking into account all modification factors of BS5268:Section 6.1:1996 for ply and OSB sheathing is given by the following equation:

PRS=1680*K101*K102*K103*K104*K105*K106*K107*K108=1703.8 N/m

Permissible racking shear load per metre for 8 mm sheathing with 3 mm diameter, 50 mm long round wire nails at 150 mm centres along the full perimeter of the panel is 1703.8 N/m.

Since applied shear load (1198 N/m) is less than permissible shear load (1703.8 N/m) then panel is adequate.

Over-turning checks

Density of sheathing	mass=5 kg/m²
Stud width	b=47 mm
Stud depth	d=97 mm
Stud centres	scrs=600 mm
FOS against overturning	FOS=1.33
Density of stud timber	dstud'=370 kg/m³

Overall weight of panel	panow=stud+ow=1.0756 kN
Combined vertical load	cvl=P+panow=5.1756 kN
Restoring moment due to vert.load	RM=cvl*w/2000=10.61 kNm
Applied over-turning moment	7.368 kNm
Factor of safety to overturning	OTFOS=RM/aotm=1.44

DESIGN	**Racking shear load**	**1.198 kN/m**
SUMMARY	**Permiss shear load**	**1.7038 kN/m**
	Applied overturning moment	**7.368 kNm**
	Restoring moment	**10.61 kNm**
	FOS against overturning	**1.44**
	Min reqd overturning FOS	**1.33**
	Sliding load at base	**1.198 kN/m**
	Nail diameter	**3 mm**
	Nail Length	**50 mm**
	Perimeter nail crs	**150 mm**
	Intermediate nail crs	**300 mm**
	OSB (type F2) thickness	**8 mm**

Location: Wall Panel Grid Line A/2

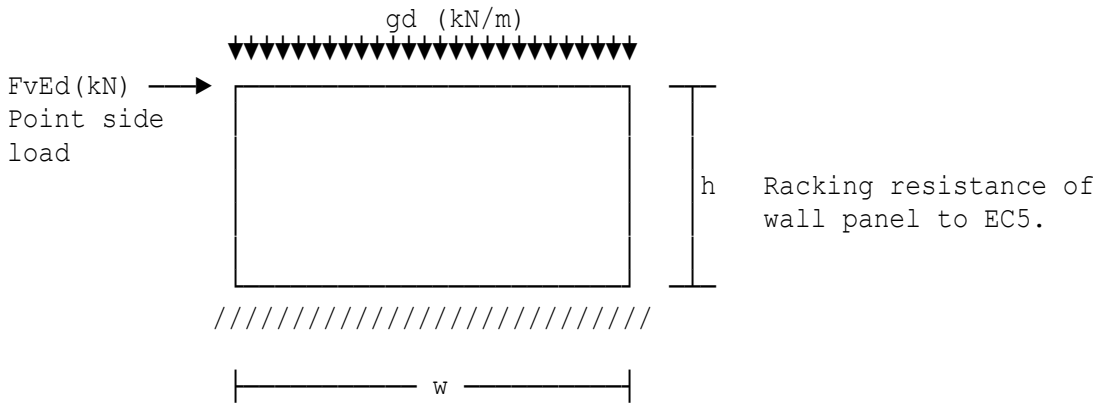

Panel assumed to be supported along full length of base sole plate and laterally restrained perpendicular to plane of racking.

Height of panel h=2500 mm
Total width of panel w=3000 mm
Design side PL on panel FvEd=5.4 kN
Design vertical load (permanent) gd=2.2545 kN/m
Wall panel comprises C16 stress grade studs with Canadian Douglas Fir plywood sheathing.
Ply sheathing thickness pst=9.5 mm

Design racking resistance

The design (racking) shear resistance FvRd will be evaluated in accordance with EC5, Section 9.2.4.3.2 for ply and OSB sheathing.

Nail diameter dn=3 mm
Nail spacing along perimeter sf=150 mm
Lateral design capac of fastener FfRd=370 N
Density of stud timber pk1=370 kg/m³
Basic fastener spacing so=9.7*dn/pk1=0.078649 m
Panel dimension factor kd=(w/h)^0.4=1.0757
Uniformly distributed load factor kq=1+(0.083*gd-0.0008*gd^2)*(2400/w)^0.4=1.1674
Fastener spacing factor ks=1/(0.86*sf/(so*1000)+0.57)=0.45245
Sheathing is assumed to be on one side of the panel only.
Sheathing material factor kn=1.0

Design racking strength of wall FvRd=FfRd*kd*kq*ks*kn/so=2672.9 N/m

Design racking shear resistance per metre for 9.5 mm sheathing with 3 mm diameter, 50 mm long round wire nails at 150 mm centres along the full perimeter of the panel is 2672.9 N/m.

Since the base design shear load (1800 N/m) is less than the design shear resistance (2672.9 N/m) the panel is adequate.

Over-turning checks

Density of sheathing	mass=5.5 kg/m²
Stud width	b=75 mm
Stud depth	d=100 mm
Stud centres	scrs=400 mm
FOS against overturning	FOS=1.33
Overall weight of panel	panow=stud+ow=1.0798 kN
Permanent actions factor	gamG=1.35
Combined design vertical load	cvl=gd'+panow*gamG=8.2212 kN
Restoring moment due to vert.load	RM=cvl*w/2000=12.332 kNm
Design over-turning moment	Mdot=13.5 kNm
Factor of safety to overturning	OTFOS=RM/Mdot=0.91347
Strap design uplift moment	Mdstr=Mdot*FOS-RM=5.6232 kNm

Buckling strength of the sheathing

The buckling of the sheets under the action of shear force FvEd may be disregarded provided EC5 expression 9.33 is satisfied.

Expression 9.33 ratio=(scrs-b)/pst=34.211
The ratio of clear distance between studs and thickness of sheathing is less than the upper limit ratio of 100. Hence OK.

DESIGN SUMMARY	**Design racking shear**	**1.8 kN/m**
	Design shear strength	**2.6729 kN/m**
	Design overturning moment	**13.5 kNm**
	Design restoring moment	**12.332 kNm**
	Strap design uplift moment	**5.6232 kNm**
	Sliding load at base	**1.8 kN/m**
	Nail diameter	**3 mm**
	Nail Length	**50 mm**
	Perimeter nail crs	**150 mm**
	Intermediate nail crs	**300 mm**
	Ply thickness	**9.5 mm**

Location:

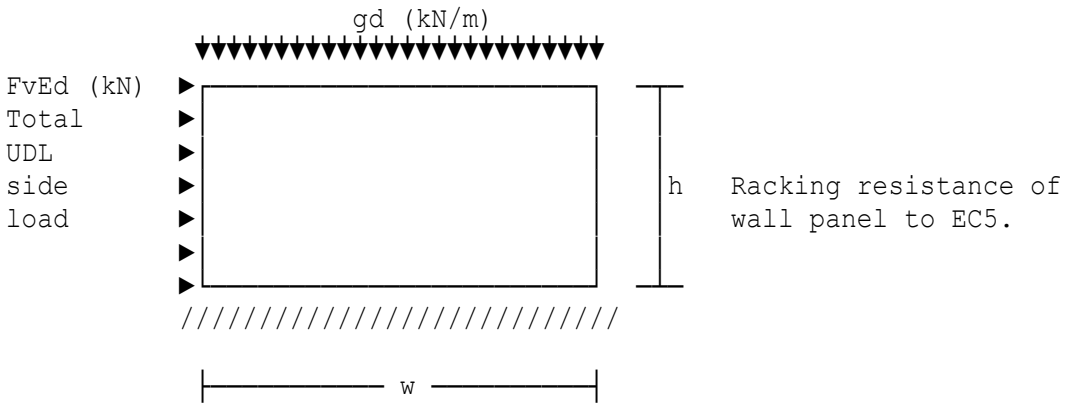

Panel assumed to be supported along full length of base sole plate and laterally restrained perpendicular to plane of racking.

Height of panel h=2800 mm
Total width of panel w=4000 mm
Design side UDL on panel FvEd=8.414 kN
Design vertical load (permanent) gd=1.0969 kN/m
Wall panel comprises C16 stress grade studs with British Hardwood plywood sheathing.
Ply sheathing thickness pst=12 mm

Design racking resistance

The design (racking) shear resistance FvRd will be evaluated in accordance with EC5, Section 9.2.4.3.2 for ply and OSB sheathing.

Nail diameter dn=3 mm
Nail spacing along perimeter sf=150 mm
Lateral design capac of fastener FfRd=370 N
Density of stud timber pk1=370 kg/m³
Basic fastener spacing so=9.7*dn/pk1=0.078649 m
Panel dimension factor kd=(w/h)^0.4=1.1533
Uniformly distributed load factor kq=1+(0.083*gd-0.0008*gd^2)*(2400/w)^0.4=1.0734
Fastener spacing factor ks=1/(0.86*sf/(so*1000)+0.57)=0.45245
Sheathing is assumed to be on one side of the panel only.
Sheathing material factor kn=1.0

Design racking strength of wall FvRd=FfRd*kd*kq*ks*kn/so=2635.2 N/m

Design racking shear resistance per metre for 12 mm sheathing with 3 mm diameter, 65 mm long round wire nails at 150 mm centres along the full perimeter of the panel is 2635.2 N/m.

Since the base design shear load (2103.5 N/m) is less than the design shear resistance (2635.2 N/m) the panel is adequate.

Over-turning checks

Density of sheathing	mass=7.32 kg/m²
Stud width	b=50 mm
Stud depth	d=125 mm
Stud centres	scrs=450 mm
FOS against overturning	FOS=1.4
Overall weight of panel	panow=stud+ow=1.537 kN
Permanent actions factor	gamG=1.35
Combined design vertical load	cvl=gd'+panow*gamG=6.4626 kN
Restoring moment due to vert.load	RM=cvl*w/2000=12.925 kNm
Design over-turning moment	Mdot=11.78 kNm
Factor of safety to overturning	OTFOS=RM/Mdot=1.0972
Strap design uplift moment	Mdstr=Mdot*FOS-RM=3.5669 kNm

Buckling strength of the sheathing

The buckling of the sheets under the action of shear force FvEd may be disregarded provided EC5 expression 9.33 is satisfied.

Expression 9.33 ratio=(scrs-b)/pst=33.333
The ratio of clear distance between studs and thickness of sheathing is less than the upper limit ratio of 100. Hence OK.

DESIGN SUMMARY	**Design racking shear**	**2.1035 kN/m**
	Design shear strength	**2.6352 kN/m**
	Design overturning moment	**11.78 kNm**
	Design restoring moment	**12.925 kNm**
	Strap design uplift moment	**3.5669 kNm**
	Sliding load at base	**2.1035 kN/m**
	Nail diameter	**3 mm**
	Nail Length	**65 mm**
	Perimeter nail crs	**150 mm**
	Intermediate nail crs	**300 mm**
	Ply thickness	**12 mm**

Location:

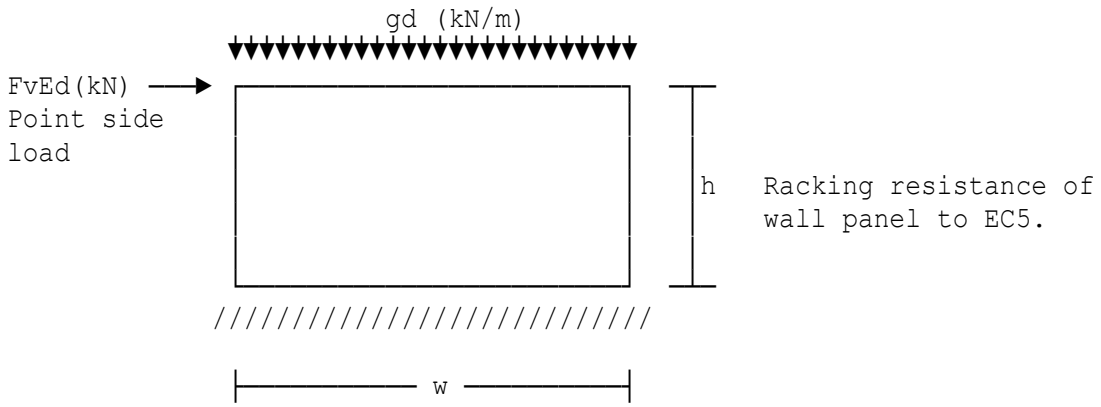

Panel assumed to be supported along full length of base sole plate and laterally restrained perpendicular to plane of racking.

Height of panel h=4035 mm
Total width of panel w=5050 mm
Design side PL on panel FvEd=9.968 kN
Design vertical load (permanent) gd=2.446 kN/m
Wall panel comprises C16 stress grade studs with American construction plywood (grade C-D or grade C-C) sheathing.
Ply sheathing thickness pst=9 mm

Design racking resistance

The design (racking) shear resistance FvRd will be evaluated in accordance with EC5, Section 9.2.4.3.2 for ply and OSB sheathing.

Nail diameter dn=3 mm
Nail spacing along perimeter sf=150 mm
Lateral design capac of fastener FfRd=370 N
Density of stud timber pk1=370 kg/m³
Basic fastener spacing so=9.7*dn/pk1=0.078649 m
Panel dimension factor kd=(4800/h)^0.4=1.0719
Uniformly distributed load factor kq=1+(0.083*gd-0.0008*gd^2)*(2400/w)^0.4=1.1472
Fastener spacing factor ks=1/(0.86*sf/(so*1000)+0.57)=0.45245
Sheathing is assumed to be on one side of the panel only.
Sheathing material factor kn=1.0

Design racking strength of wall FvRd=FfRd*kd*kq*ks*kn/so=2617.5 N/m

Design racking shear resistance per metre for 9 mm sheathing with 3 mm diameter, 50 mm long round wire nails at 150 mm centres along the full perimeter of the panel is 2617.5 N/m.

Since the base design shear load (1973.9 N/m) is less than the design shear resistance (2617.5 N/m) the panel is adequate.

Over-turning checks

Density of sheathing	mass=4.9 kg/m²
Stud width	b=97 mm
Stud depth	d=147 mm
Stud centres	scrs=600 mm
FOS against overturning	FOS=1.4
Overall weight of panel	panow=stud+ow=3.2914 kN
Permanent actions factor	gamG=1.35
Combined design vertical load	cvl=gd'+panow*gamG=16.796 kN
Restoring moment due to vert.load	RM=cvl*w/2000=42.409 kNm
Design over-turning moment	Mdot=40.221 kNm
Factor of safety to overturning	OTFOS=RM/Mdot=1.0544
Strap design uplift moment	Mdstr=Mdot*FOS-RM=13.9 kNm

Buckling strength of the sheathing

The buckling of the sheets under the action of shear force FvEd may be disregarded provided EC5 expression 9.33 is satisfied.

Expression 9.33 ratio=(scrs-b)/pst=55.889
The ratio of clear distance between studs and thickness of sheathing is less than the upper limit ratio of 100. Hence OK.

DESIGN SUMMARY	**Design racking shear**	**1.9739 kN/m**
	Design shear strength	**2.6175 kN/m**
	Design overturning moment	**40.221 kNm**
	Design restoring moment	**42.409 kNm**
	Strap design uplift moment	**13.9 kNm**
	Sliding load at base	**1.9739 kN/m**
	Nail diameter	**3 mm**
	Nail Length	**50 mm**
	Perimeter nail crs	**150 mm**
	Intermediate nail crs	**300 mm**
	Ply thickness	**9 mm**

Location:

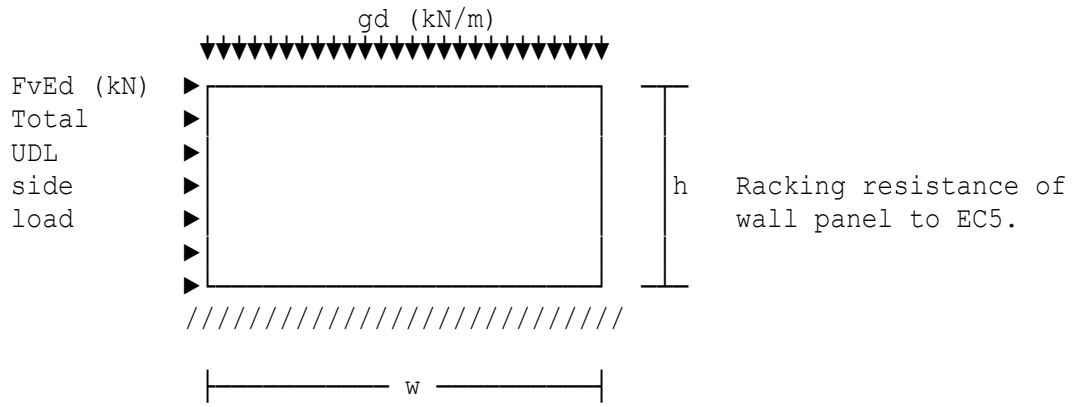

Panel assumed to be supported along full length of base sole plate and laterally restrained perpendicular to plane of racking.

Height of panel h=2150 mm
Total width of panel w=1800 mm
Design side UDL on panel FvEd=2.198 kN
Design vertical load (permanent) gd=1.1625 kN/m
Wall panel comprises C16 stress grade studs with Finnish Birch plywood sheathing.
Ply sheathing thickness pst=9 mm

Design racking resistance

The design (racking) shear resistance FvRd will be evaluated in accordance with EC5, Section 9.2.4.3.2 for ply and OSB sheathing.

Nail diameter dn=3 mm
Nail spacing along perimeter sf=150 mm
Lateral design capac of fastener FfRd=370 N
Density of stud timber pk1=370 kg/m³
Basic fastener spacing so=9.7*dn/pk1=0.078649 m
Panel dimension factor kd=w/h=0.83721
Uniformly distributed load factor kq=1+(0.083*gd-0.0008*gd^2)*(2400/w)^0.4=1.107
Fastener spacing factor ks=1/(0.86*sf/(so*1000)+0.57)=0.45245
Sheathing is assumed to be on one side of the panel only.
Sheathing material factor kn=1.0

Design racking strength of wall FvRd=FfRd*kd*kq*ks*kn/so=1972.8 N/m

Design racking shear resistance per metre for 9 mm sheathing with 3 mm diameter, 50 mm long round wire nails at 150 mm centres along the full perimeter of the panel is 1972.8 N/m.

Since the base design shear load (1221.1 N/m) is less than the design shear resistance (1972.8 N/m) the panel is adequate.

Over-turning checks

Density of sheathing	mass=6.2 kg/m²
Stud width	b=47 mm
Stud depth	d=97 mm
Stud centres	scrs=450 mm
FOS against overturning	FOS=1.4
Overall weight of panel	panow=stud+ow=0.46506 kN
Permanent actions factor	gamG=1.35
Combined design vertical load	cvl=gd'+panow*gamG=2.7203 kN
Restoring moment due to vert.load	RM=cvl*w/2000=2.4483 kNm
Design over-turning moment	Mdot=2.3629 kNm
Factor of safety to overturning	OTFOS=RM/Mdot=1.0361
Strap design uplift moment	Mdstr=Mdot*FOS-RM=0.85976 kNm

Buckling strength of the sheathing

The buckling of the sheets under the action of shear force FvEd may be disregarded provided EC5 expression 9.33 is satisfied.

Expression 9.33 ratio=(scrs-b)/pst=44.778
The ratio of clear distance between studs and thickness of sheathing is less than the upper limit ratio of 100. Hence OK.

DESIGN SUMMARY	**Design racking shear**	**1.2211 kN/m**
	Design shear strength	**1.9728 kN/m**
	Design overturning moment	**2.3629 kNm**
	Design restoring moment	**2.4483 kNm**
	Strap design uplift moment	**0.85976 kNm**
	Sliding load at base	**1.2211 kN/m**
	Nail diameter	**3 mm**
	Nail Length	**50 mm**
	Perimeter nail crs	**150 mm**
	Intermediate nail crs	**300 mm**
	Ply thickness	**9 mm**

Location:

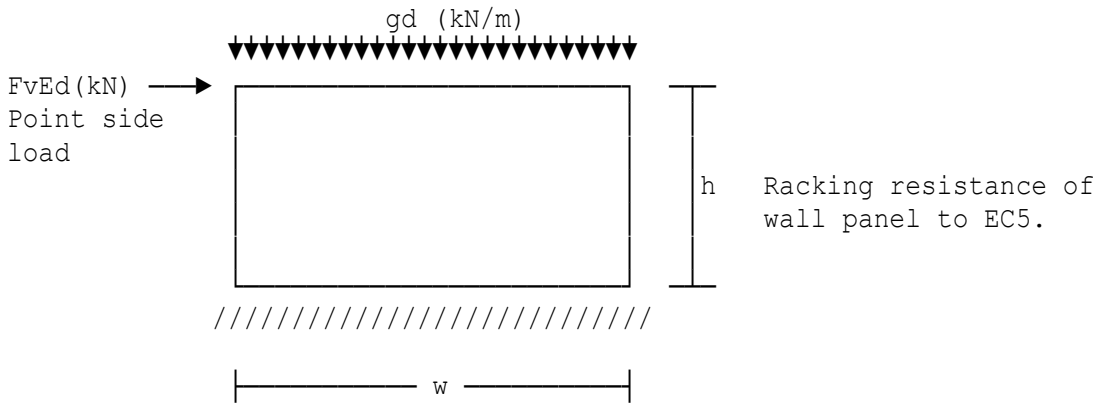

Panel assumed to be supported along full length of base sole plate and laterally restrained perpendicular to plane of racking.

Height of panel	h=6000 mm
Total width of panel	w=6750 mm
Design side PL on panel	FvEd=22.2 kN
Design vertical load (permanent)	gd=3.1 kN/m

Wall panel comprises C16 stress grade studs with Swedish Softwood Construction plywood sheathing.

Ply sheathing thickness	pst=12.5 mm

Design racking resistance

The design (racking) shear resistance FvRd will be evaluated in accordance with EC5, Section 9.2.4.3.2 for ply and OSB sheathing.

Nail diameter	dn=3 mm
Nail spacing along perimeter	sf=150 mm
Lateral design capac of fastener	FfRd=570 N
Density of stud timber	pk1=370 kg/m³
Basic fastener spacing	so=9.7*dn/pk1=0.078649 m
Panel dimension factor	kd=(4800/h)^0.4=0.91461
Uniformly distributed load factor	kq=1+(0.083*gd-0.0008*gd^2)*(2400 /w)^0.4=1.1651
Fastener spacing factor	ks=1/(0.86*sf/(so*1000)+0.57)=0.45245

Sheathing is assumed to be on one side of the panel only.

Sheathing material factor	kn=1.0

Design racking strength of wall FvRd=FfRd*kd*kq*ks*kn/so=3494.1 N/m

Design racking shear resistance per metre for 12.5 mm sheathing with 3 mm diameter, 75 mm long round wire nails at 150 mm centres along the full perimeter of the panel is 3494.1 N/m.

Since the base design shear load (3288.9 N/m) is less than the design shear resistance (3494.1 N/m) the panel is adequate.

Over-turning checks

Density of sheathing	mass=5.3 kg/m²
Stud width	b=63 mm
Stud depth	d=197 mm
Stud centres	scrs=400 mm
FOS against overturning	FOS=1.4
Overall weight of panel	panow=stud+ow=7.2123 kN
Permanent actions factor	gamG=1.35
Combined design vertical load	cvl=gd'+panow*gamG=30.662 kN
Restoring moment due to vert.load	RM=cvl*w/2000=103.48 kNm
Design over-turning moment	Mdot=133.2 kNm
Factor of safety to overturning	OTFOS=RM/Mdot=0.7769
Strap design uplift moment	Mdstr=Mdot*FOS-RM=82.997 kNm

Buckling strength of the sheathing

The buckling of the sheets under the action of shear force FvEd may be disregarded provided EC5 expression 9.33 is satisfied.

Expression 9.33 ratio=(scrs-b)/pst=26.96
The ratio of clear distance between studs and thickness of sheathing is less than the upper limit ratio of 100. Hence OK.

DESIGN SUMMARY	**Design racking shear**	**3.2889 kN/m**
	Design shear strength	**3.4941 kN/m**
	Design overturning moment	**133.2 kNm**
	Design restoring moment	**103.48 kNm**
	Strap design uplift moment	**82.997 kNm**
	Sliding load at base	**3.2889 kN/m**
	Nail diameter	**3 mm**
	Nail Length	**75 mm**
	Perimeter nail crs	**150 mm**
	Intermediate nail crs	**300 mm**
	Ply thickness	**12.5 mm**

Location:

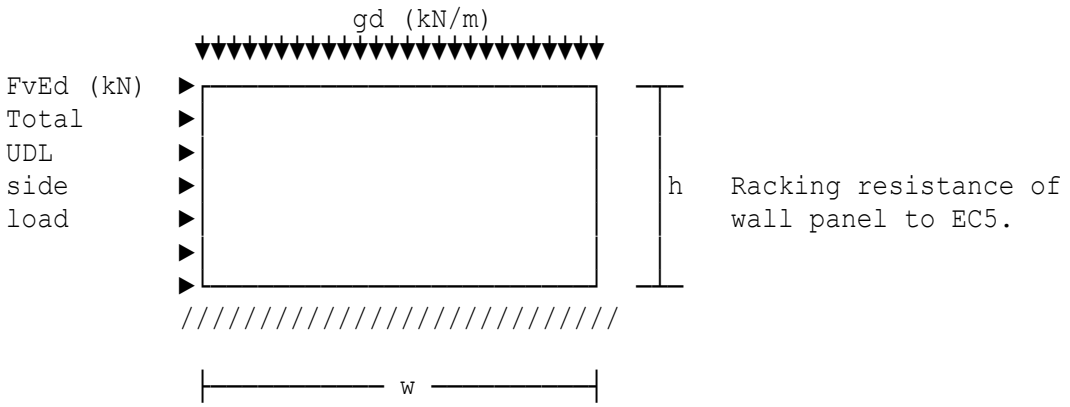

Panel assumed to be supported along full length of base sole plate and laterally restrained perpendicular to plane of racking.

Height of panel h=5200 mm
Total width of panel w=14600 mm
Design side UDL on panel FvEd=25.939 kN
Design vertical load (permanent) gd=0.35803 kN/m
Wall panel comprises C16 stress grade studs with Finnish Birch faced plywood sheathing.
Ply sheathing thickness pst=8 mm

Design racking resistance

The design (racking) shear resistance FvRd will be evaluated in accordance with EC5, Section 9.2.4.3.2 for ply and OSB sheathing.

Nail diameter dn=3 mm
Nail spacing along perimeter sf=150 mm
Lateral design capac of fastener FfRd=370 N
Density of stud timber pk1=370 kg/m³
Basic fastener spacing so=9.7*dn/pk1=0.078649 m
Panel dimension factor kd=(4800/h)^0.4=0.96849
Uniformly distributed load factor kq=1+(0.083*gd-0.0008*gd^2)*(2400/w)^0.4=1.0144
Fastener spacing factor ks=1/(0.86*sf/(so*1000)+0.57)=0.45245
Sheathing is assumed to be on one side of the panel only.
Sheathing material factor kn=1.0

Design racking strength of wall FvRd=FfRd*kd*kq*ks*kn/so=2091.1 N/m

Design racking shear resistance per metre for 8 mm sheathing with 3 mm diameter, 50 mm long round wire nails at 150 mm centres along the full perimeter of the panel is 2091.1 N/m.

Since the base design shear load (1776.6 N/m) is less than the design shear resistance (2091.1 N/m) the panel is adequate.

Over-turning checks

Density of sheathing	mass=4.9 kg/m²
Stud width	b=47 mm
Stud depth	d=175 mm
Stud centres	scrs=400 mm
FOS against overturning	FOS=1.25
Overall weight of panel	panow=stud+ow=10.161 kN
Permanent actions factor	gamG=1.35
Combined design vertical load	cvl=gd'+panow*gamG=18.945 kN
Restoring moment due to vert.load	RM=cvl*w/2000=138.3 kNm
Design over-turning moment	Mdot=67.441 kNm
Factor of safety to overturning	OTFOS=RM/Mdot=2.0507

Buckling strength of the sheathing

The buckling of the sheets under the action of shear force FvEd may be disregarded provided EC5 expression 9.33 is satisfied.

Expression 9.33 ratio=(scrs-b)/pst=44.125
The ratio of clear distance between studs and thickness of sheathing is less than the upper limit ratio of 100. Hence OK.

DESIGN SUMMARY	**Design racking shear**	**1.7766 kN/m**
	Design shear strength	**2.0911 kN/m**
	Design overturning moment	**67.441 kNm**
	Design restoring moment	**138.3 kNm**
	FOS against overturning	**2.0507**
	Min reqd.overturning FOS	**1.25**
	Sliding load at base	**1.7766 kN/m**
	Nail diameter	**3 mm**
	Nail Length	**50 mm**
	Perimeter nail crs	**150 mm**
	Intermediate nail crs	**300 mm**
	Ply thickness	**8 mm**

Location:

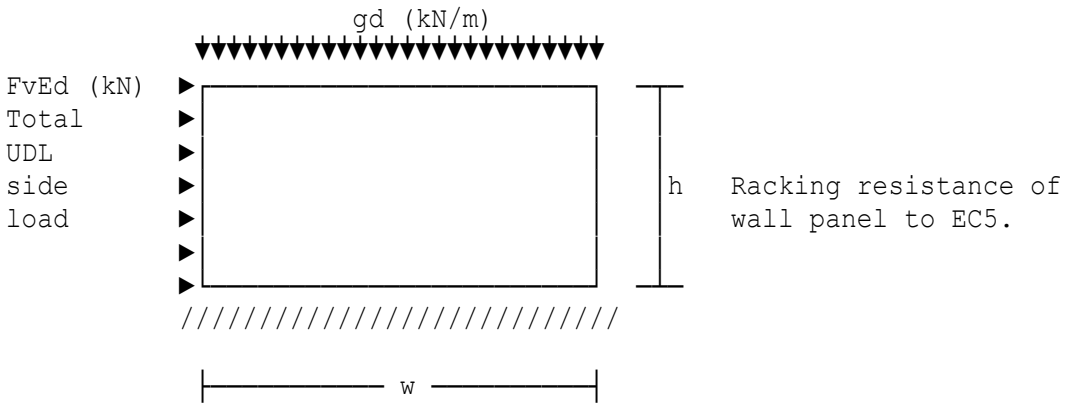

Panel assumed to be supported along full length of base sole plate and laterally restrained perpendicular to plane of racking.

Height of panel	h=3000 mm
Total width of panel	w=4100 mm
Design side UDL on panel	FvEd=6.8768 kN
Design vertical load (permanent)	gd=1.1268 kN/m

WARNING:
Plasterboard alone should not be relied upon to provide the racking resistance of a dwelling; however plasterboard will contribute to the racking resistance if used with ply or OSB sheathing. This is outside the scope of this proforma.

Location:

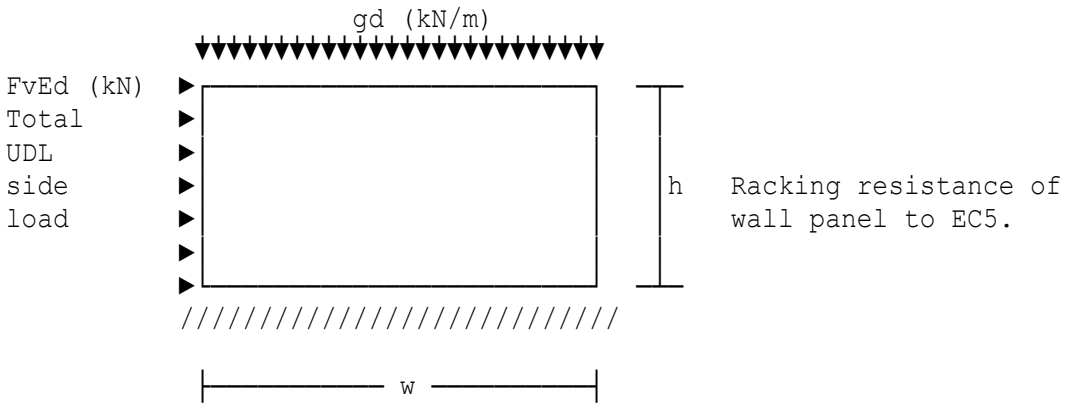

Panel assumed to be supported along full length of base sole plate and laterally restrained perpendicular to plane of racking.

Height of panel h=3000 mm
Total width of panel w=4100 mm
Design side UDL on panel FvEd=6.8768 kN
Design vertical load (permanent) gd=1.35 kN/m
Wall panel comprises C16 stress grade studs with Swedish Softwood Construction OSB sheathing.
OSB sheathing thickness pst=8 mm

Design racking resistance

The design (racking) shear resistance FvRd will be evaluated in accordance with EC5, Section 9.2.4.3.2 for ply and OSB sheathing.

Nail diameter dn=3 mm
Nail spacing along perimeter sf=150 mm
Lateral design capac of fastener FfRd=370 N
Density of stud timber pk1=370 kg/m³
Basic fastener spacing so=9.7*dn/pk1=0.078649 m
Panel dimension factor kd=(w/h)^0.4=1.1331
Uniformly distributed load factor kq=1+(0.083*gd-0.0008*gd^2)*(2400/w)^0.4=1.0893
Fastener spacing factor ks=1/(0.86*sf/(so*1000)+0.57)=0.45245
Sheathing is assumed to be on one side of the panel only.
Sheathing material factor kn=1.0

Design racking strength of wall FvRd=FfRd*kd*kq*ks*kn/so=2627.1 N/m

Design racking shear resistance per metre for 8 mm sheathing with 3 mm diameter, 50 mm long round wire nails at 150 mm centres along the full perimeter of the panel is 2627.1 N/m.

Since the base design shear load (1677.3 N/m) is less than the design shear resistance (2627.1 N/m) the panel is adequate.

Over-turning checks

Density of sheathing	mass=5 kg/m²
Stud width	b=47 mm
Stud depth	d=97 mm
Stud centres	scrs=600 mm
FOS against overturning	FOS=1.33
Overall weight of panel	panow=stud+ow=1.0756 kN
Permanent actions factor	gamG=1.35
Combined design vertical load	cvl=gd'+panow*gamG=6.9871 kN
Restoring moment due to vert.load	RM=cvl*w/2000=14.324 kNm
Design over-turning moment	Mdot=10.315 kNm
Factor of safety to overturning	OTFOS=RM/Mdot=1.3886

Buckling strength of the sheathing

The buckling of the sheets under the action of shear force FvEd may be disregarded provided EC5 expression 9.33 is satisfied.

Expression 9.33 ratio=(scrs-b)/pst=69.125
The ratio of clear distance between studs and thickness of sheathing is less than the upper limit ratio of 100. Hence OK.

DESIGN SUMMARY	**Design racking shear**	**1.6773 kN/m**
	Design shear strength	**2.6271 kN/m**
	Design overturning moment	**10.315 kNm**
	Design restoring moment	**14.324 kNm**
	FOS against overturning	**1.3886**
	Min reqd.overturning FOS	**1.33**
	Sliding load at base	**1.6773 kN/m**
	Nail diameter	**3 mm**
	Nail Length	**50 mm**
	Perimeter nail crs	**150 mm**
	Intermediate nail crs	**300 mm**
	OSB thickness	**8 mm**

Location: Timber beam with udl & point loads

Structural design of a timber member for fire resistance

BS5268 Part 4 Section 4.1: 1978 sets out a method for calculating the fire resistance of timber members. Fire resistance of a member is the period of time which the member is required to support the design load without failure whilst subjected to the fire.
The method assumes that a depth of charring occurs around the exposed face of the section, and the corners of the beam become rounded.
The residual section is checked for stability strength and the beam deflection is limited to Span/20 (1990 revision).

Basic fire exposure period	period=30 min
Timber is Western red cedar	
Charring depth	char=25 mm
Original depth of section	od=297 mm
Original width of section	ob=147 mm

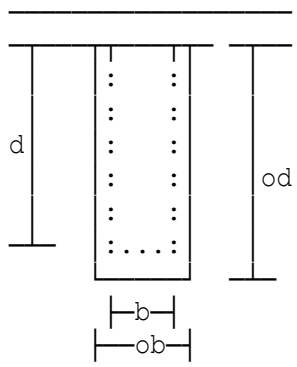

Timber beam is exposed on three sides and protected by structure on top face.

Residual depth of beam	d=od-char=272 mm
Residual width of beam	b=ob-2*char=97 mm

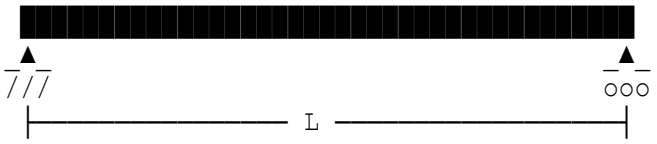

Simply supported beam subjected to vertical loads.

Beam span	L=7.2 m
Dist. from left support to start	Lau(1)=0 m
Distance from left support to end	Lbu(1)=7.2 m
Dead load (unfactored)	Gku(1)=0.25 kN/m
Imposed load (unfactored)	Qku(1)=1.2 kN/m
Maximum span bending moment	9.396 kNm
Design shear force	Fve'=5.22

Eff.length for bending about xx Lex=7200 mm
Eff.length for bending about yy Ley=0 mm
Length of bearing lb=147 mm
From BS5268 Part 2 Table 18 and bearing is < 75 mm from joist end
Bearing Modification factor K4=1.0
Strength class C16 to Table 8.

Depth factor K7=(300/d)^0.11=1.0108
Load-sharing modification factor K8=1.1
No notches exist at the support. K5=1.0

Permissible stresses

BS 5268 Part 4 Section 4.1 does not give any guidance on the enhancement to the shear stress or for compression perpendicular to the grain using the residual section method.
Shear enhancement factor adopted Shefac=2
Shear parallel to grain torad=Shefac*K2shr*K3*K5*K8*torad
=1.474 N/mm²
Compress perp to grain enhancement factor adopted Cpgfac=2
Compress perp to grain (no wane) sigbad=Cpgfac*K2per*K3*K4*K8*sigbad
=4.84 N/mm²

DESIGN SUMMARY

Bending stress	**7.8587 N/mm²**
Permissible bending	**13.26 N/mm²**
Deflection	**36.236 mm**
Limiting deflection	**360 mm**
Shear stress	**0.29677 N/mm²**
Permissible shear	**1.474 N/mm²**
Bearing stress	**0.36608 N/mm²**
Permissible bearing	**4.84 N/mm²**

Location: Timber beam with udl & point loads (2)

Structural design of a timber member for fire resistance

BS5268 Part 4 Section 4.1: 1978 sets out a method for calculating the fire resistance of timber members. Fire resistance of a member is the period of time which the member is required to support the design load without failure whilst subjected to the fire.
The method assumes that a depth of charring occurs around the exposed face of the section, and the corners of the beam become rounded.
The residual section is checked for stability strength and the beam deflection is limited to Span/20 (1990 revision).
Basic fire exposure period period=60 min
Timber is a structural species included in BS 5268-2:2002 except Western red cedar or a hardwood having a nominal density of 650 kg/m³ at 18% moisture content.

Charring depth char=40 mm
Original depth of section od=305 mm
Original width of section ob=197 mm

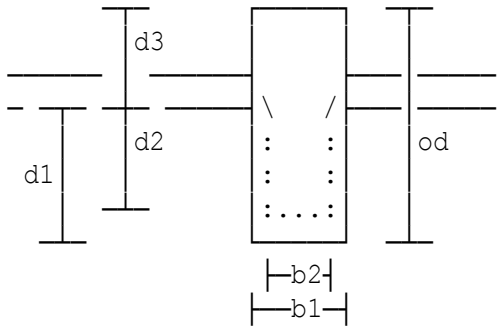

Timber beam partly exposed with protective structure part way down beam's depth.

Depth of beam below fire proof structure d1=125 mm

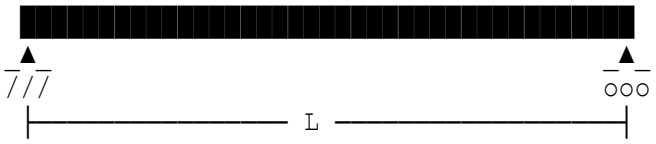

Simply supported beam subjected to vertical loads.

Beam span L=8.5 m
Dist. from left support to start Lau(1)=0 m
Distance from left support to end Lbu(1)=8.5 m
Dead load (unfactored) Gku(1)=0.45 kN/m
Imposed load (unfactored) Qku(1)=0.9 kN/m
Maximum span bending moment 12.192 kNm
Design shear force Fve'=5.7375

Design axial load (+ve compress) Fa=9.2 kN
Eff.length for bending about xx Lex=8500 mm
Eff.length for bending about yy Ley=0 mm
Length of bearing lb=100 mm
>From BS5268 Part 2 Table 18 and bearing is > 75 mm from joist end
Bearing modification factor K4=1.1
Strength class C18 to Table 8.

Depth factor K7=(300/d)^0.11=1.018
Load-sharing modification factor K8=1.1
Modulus of elasticity mod factor K9=1
Modification factor K12=(0.5+(1+eta)*C/2)-((0.5+(1+eta)*C/2)^2-C)^0.5
=0.25615
Depth of notch at support notch=20 mm
Extent of notch al=100 mm
K5=(d*(he-al)+(al*he))/he/he=1.0489

Permissible stresses

BS 5268 Part 4 Section 4.1 does not give any guidance on the enhancement to the shear stress or for compression perpendicular to the grain using the residual section method.
Shear enhancement factor adopted Shefac=2
Shear parallel to grain torad=Shefac*K2shr*K3*K5*K8*torad
=1.5461 N/mm²
Compress perp to grain enhancement factor adopted Cpgfac=2
Compress perp to grain (no wane) sigbad=Cpgfac*K2per*K3*K4*K8*sigbad
=5.324 N/mm²

DESIGN SUMMARY

Bending stress	**8.401 N/mm²**
Permissible bending	**14.614 N/mm²**
Comp Stress @ Mids.	**0.21528 N/mm²**
Permiss.compression	**4.001 N/mm²**
Interaction factor	**0.64239**
Comp.stress @ Supp.	**0.26632 N/mm²**
Deflection	**55.181 mm**
Limiting deflection	**425 mm**
Shear stress	**0.24913 N/mm²**
Permissible shear	**1.5461 N/mm²**
Bearing stress	**0.39031 N/mm²**
Permissible bearing	**5.324 N/mm²**

Location: Timber beam with udl & point loads (3)

Structural design of a timber member for fire resistance

BS5268 Part 4 Section 4.1: 1978 sets out a method for calculating the fire resistance of timber members. Fire resistance of a member is the period of time which the member is required to support the design load without failure whilst subjected to the fire.
The method assumes that a depth of charring occurs around the exposed face of the section, and the corners of the beam become rounded.
The residual section is checked for stability strength and the beam deflection is limited to Span/20 (1990 revision).
Basic fire exposure period period=15 min
Timber is a hardwood having a nominal density of 650 kg/m³ at 18% moisture content.

Charring depth char=7.5 mm
Original depth of section od=272 mm
Original width of section ob=63 mm

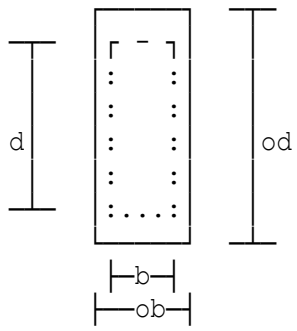

Timber beam exposed on all four sides.

Residual depth of beam d=od-2*char=253.25 mm
Residual width of beam b=ob-2*char=44.25 mm

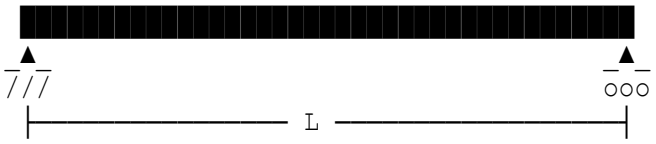

Simply supported beam subjected to vertical loads.

Beam span L=4.5 m
Dist. from left support to start Lau(1)=0 m
Distance from left support to end Lbu(1)=4.5 m
Dead load (unfactored) Gku(1)=0.35 kN/m
Imposed load (unfactored) Qku(1)=1.75 kN/m
Maximum span bending moment 5.3156 kNm
Design shear force Fve'=4.725

Design axial load (+ve compress) Fa=-3 kN
Eff.length for bending about xx Lex=0 mm
Eff.length for bending about yy Ley=0 mm
Length of bearing lb=100 mm
>From BS5268 Part 2 Table 18 and bearing is > 75 mm from joist end
Bearing modification factor K4=1.1
Strength class D40 to Table 8.

Tensile area of cross section At=5500 mm²
Depth factor K7=(300/d)^0.11=1.0188
Load-sharing modification factor K8=1.0
Modulus of elasticity mod factor K9=1.06
No notches exist at the support. K5=1.0

Permissible stresses

Width modification factor K14=(300/h)^0.11=1.0188
BS 5268 Part 4 Section 4.1 does not give any guidance on the enhancement to the shear stress or for compression perpendicular to the grain using the residual section method.
Shear enhancement factor adopted Shefac=2
Shear parallel to grain torad=Shefac*K2shr*K3*K5*K8*torad
=4 N/mm²
Compress perp to grain enhancement factor adopted Cpgfac=2
Compress perp to grain (no wane) sigbad=Cpgfac*K2per*K3*K4*K8*sigbad
=8.58 N/mm²

DESIGN SUMMARY

Bending stress	**11.462 N/mm²**
Permissible bending	**25.47 N/mm²**
Tension stress	**0.54545 N/mm²**
Permiss.tension	**15.282 N/mm²**
Interaction factor	**0.48572**
Deflection	**25.164 mm**
Limiting deflection	**225 mm**
Shear stress	**0.63246 N/mm²**
Permissible shear	**4 N/mm²**
Bearing stress	**1.0678 N/mm²**
Permissible bearing	**8.58 N/mm²**

Location: Timber beam with udl & point loads (4)

Structural design of a timber member for fire resistance

BS5268 Part 4 Section 4.1: 1978 sets out a method for calculating the fire resistance of timber members. Fire resistance of a member is the period of time which the member is required to support the design load without failure whilst subjected to the fire.
The method assumes that a depth of charring occurs around the exposed face of the section, and the corners of the beam become rounded.
The residual section is checked for stability strength and the beam deflection is limited to Span/20 (1990 revision).
Basic fire exposure period period=60 min
Timber is a structural species included in BS 5268-2:2002 except Western red cedar or a hardwood having a nominal density of 650 kg/m³ at 18% moisture content.

Charring depth char=40 mm
Original depth of section od=247 mm
Original width of section ob=97 mm

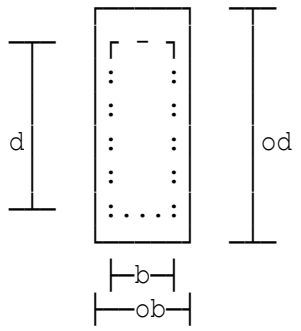

Timber beam exposed on all four sides.

Residual depth of beam d=od-2*char=167 mm
Residual width of beam b=ob-2*char=17 mm
Residual width is less than 2 x char depth so depth of charred corners overlap. Neglect contribution from remaining section below char rounding. Reduced depth of section d=d-2*char=87 mm

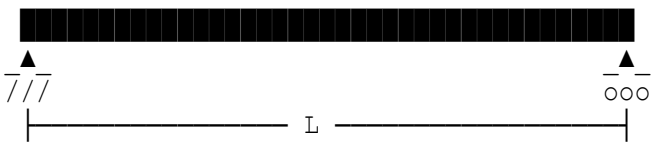

Simply supported beam subjected to vertical loads.

Beam span L=2.4 m
Distance from left support Lc(1)=1.2 m
Dead load (unfactored) Gkc(1)=0.3 kN
Imposed load (unfactored) Qkc(1)=0.35 kN

Maximum span bending moment 0.39 kNm
Design shear force Fve'=0.325
Eff.length for bending about xx Lex=0 mm
Eff.length for bending about yy Ley=0 mm
Length of bearing lb=75 mm
From BS5268 Part 2 Table 18 and bearing is < 75 mm from joist end
Bearing Modification factor K4=1.0
Strength class C24 to Table 8.

Depth factor K7=(300/d)^0.11=1.1459
Load-sharing modification factor K8=1.0
No notches exist at the support. K5=1.0

Permissible stresses

BS 5268 Part 4 Section 4.1 does not give any guidance on the enhancement to the shear stress or for compression perpendicular to the grain using the residual section method.
Shear enhancement factor adopted Shefac=2
Shear parallel to grain torad=Shefac*K2shr*K3*K5*K8*torad
=1.42 N/mm²
Compress perp to grain enhancement factor adopted Cpgfac=2
Compress perp to grain (no wane) sigbad=Cpgfac*K2per*K3*K4*K8*sigbad
=4.8 N/mm²

	Bending stress	**18.186 N/mm²**
	Permissible bending	**19.337 N/mm²**
DESIGN	**Deflection**	**28.574 mm**
SUMMARY	**Limiting deflection**	**120 mm**
	Shear stress	**0.32961 N/mm²**
	Permissible shear	**1.42 N/mm²**
	Bearing stress	**0.2549 N/mm²**
	Permissible bearing	**4.8 N/mm²**

Location: Timber beam with udl & point loads

Structural design of a timber member for fire resistance

BS EN 1995-1-2:2004 sets out a method for calculating the fire resistance of timber members. Fire resistance of a member is the period of time which the member is required to support the design load without failure whilst subjected to the fire.
The method assumes that a depth of charring occurs around the exposed face of the section, and the corners of the beam become rounded. The residual section is checked for strength and the beam deflection is limited to Span/20 which is the recommended vertical deflection limit given in the EC5 Manual.

Basic fire exposure period	period=30 min
Enter the charring rate βn	betan=0.6
Effective charring depth	char=betan*period+k0*d0=25 mm
Original depth of section	oh=297 mm
Original width of section	ob=147 mm

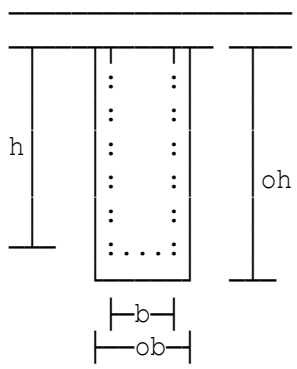

Timber beam is exposed on three sides and protected by structure on top face.

Residual depth of beam	h=oh-char=272 mm
Residual width of beam	b=ob-2*char=97 mm

Timber beam to EC5

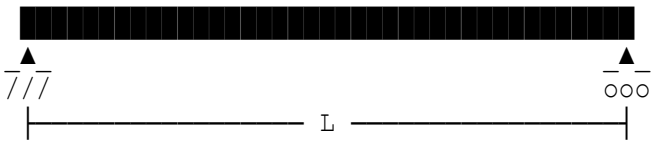

Simply supported beam subject to vertical loads.

Beam span	L=7.2 m
Dist. from left support to start	Lau(1)=0 m
Distance from left support to end	Lbu(1)=7.2 m
Permanent load (unfactored)	Gku(1)=0.25 kN/m
Variable load 1 (unfactored)	Qua(1)=1.2 kN/m

Characteristic values of actions

Permanent:	
Reaction at left hand end	0.9 kN
Reaction at right hand end	0.9 kN
Maximum span moment	Mkp=1.62 kNm
Maximum shear force	Fkp=0.9 kN
Variable 1:	
Reaction at left hand end	4.32 kN
Reaction at right hand end	4.32 kN
Maximum span moment	Mkv1=7.776 kNm
Maximum shear force	Fkv1=4.32 kN
Design axial load (+ve compress)	Nd=0 kN

Section design parameters

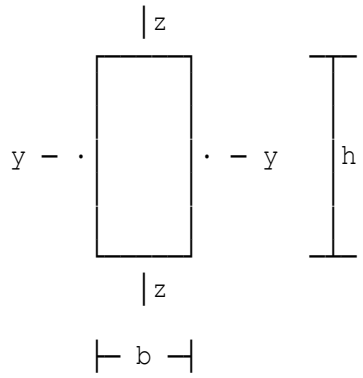

Eff.length for bending about yy	Ley'=7200 mm
Eff.length for bending about zz	Lez=0 mm
Length of bearing	lb=147 mm
Bearing modification factor	kc90=1.5
Timber strength class C16.	
Depth factor (Clause 3.2)	kh=1.0
Load-sharing modification factor	ksys=1.1
No notches exist at the support	kv=1.0
Effective length about zz	Le=5.76 m

	Design bending stress	**7.8587 N/mm²**
	Design bending strength	**22 N/mm²**
DESIGN	**Deflection**	**39.859 mm**
SUMMARY	**Limiting deflection**	**360 mm**
	Design shear stress	**0.29677 N/mm²**
	Design shear strength	**4.4 N/mm²**
	Design bearing stress	**0.36608 N/mm²**
	Design bearing strength	**4.5375 N/mm²**

Location: Timber beam with udl & point loads (2)

Structural design of a timber member for fire resistance

BS EN 1995-1-2:2004 sets out a method for calculating the fire resistance of timber members. Fire resistance of a member is the period of time which the member is required to support the design load without failure whilst subjected to the fire.
The method assumes that a depth of charring occurs around the exposed face of the section, and the corners of the beam become rounded. The residual section is checked for strength and the beam deflection is limited to Span/20 which is the recommended vertical deflection limit given in the EC5 Manual.

Basic fire exposure period	period=60 min
Enter the charring rate βn	betan=0.7
Effective charring depth	char=betan*period+k0*d0=49 mm
Original depth of section	oh=305 mm
Original width of section	ob=197 mm

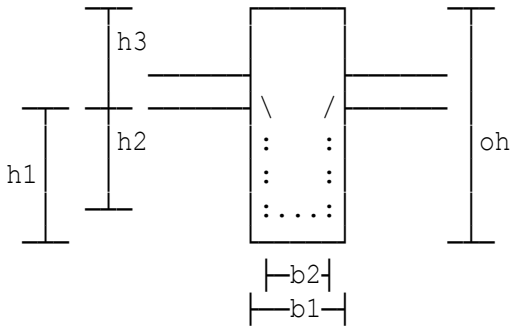

Timber beam partly exposed with protective structure part way down beam's depth.

Depth of beam below fire proof structure h1=125 mm

Timber beam to EC5

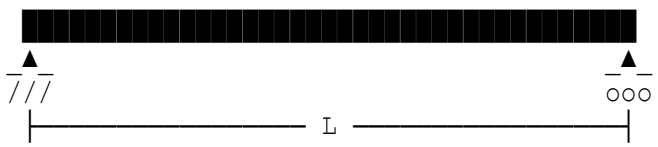

Simply supported beam subject to vertical loads.

Beam span	L=8.5 m
Dist. from left support to start	Lau(1)=0 m
Distance from left support to end	Lbu(1)=8.5 m
Permanent load (unfactored)	Gku(1)=0.45 kN/m
Variable load 1 (unfactored)	Qua(1)=0.9 kN/m

Characteristic values of actions

Permanent:	
Reaction at left hand end	1.9125 kN
Reaction at right hand end	1.9125 kN
Maximum span moment	Mkp=4.0641 kNm
Maximum shear force	Fkp=1.9125 kN
Variable 1:	
Reaction at left hand end	3.825 kN
Reaction at right hand end	3.825 kN
Maximum span moment	Mkv1=8.1281 kNm
Maximum shear force	Fkv1=3.825 kN
Design axial load (+ve compress)	Nd=9.2 kN

Section design parameters

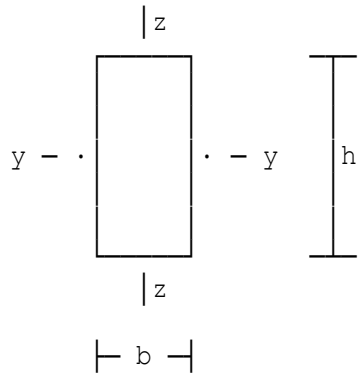

Eff.length for bending about yy	Ley'=8500 mm
Eff.length for bending about zz	Lez=0 mm
Length of bearing	lb=100 mm
Bearing modification factor	kc90=1.5
Timber strength class C18.	
Depth factor (Clause 3.2)	kh=1.0
Load-sharing modification factor	ksys=1.1
Instability factor	kcy=1/(ky+(ky^2-rsry^2)^0.5)=0.18288
Instability factor	kcz=1/(kz+(kz^2-rsrz^2)^0.5)=1.0638
Max instability factor	kcz=1
Depth of notch at support	notch=20 mm
Notch is on top edge of beam	kv=1
Effective length about zz	Le=6.8 m

DESIGN SUMMARY

Design bending stress	**8.2567 N/mm²**
Design bending strength	**24.75 N/mm²**
Design comp stress @ Mids.	**0.21403 N/mm²**
Design comp strength	**24.75 N/mm²**
Interaction factor	**0.38089**
Design comp stress @ Supp.	**0.2634 N/mm²**
Deflection	**54.627 mm**
Limiting deflection	**425 mm**
Design shear stress	**0.2464 N/mm²**
Design shear strength	**4.675 N/mm²**
Design bearing stress	**0.38767 N/mm²**
Design bearing strength	**4.5375 N/mm²**

Location: Timber beam with udl & point loads (3)

Structural design of a timber member for fire resistance

BS EN 1995-1-2:2004 sets out a method for calculating the fire resistance of timber members. Fire resistance of a member is the period of time which the member is required to support the design load without failure whilst subjected to the fire.
The method assumes that a depth of charring occurs around the exposed face of the section, and the corners of the beam become rounded. The residual section is checked for strength and the beam deflection is limited to Span/20 which is the recommended vertical deflection limit given in the EC5 Manual.

Basic fire exposure period	period=15 min
Enter the charring rate βn	betan=0.7
Effective charring depth	char=betan*period+k0*d0=15.75 mm
Original depth of section	oh=272 mm
Original width of section	ob=63 mm

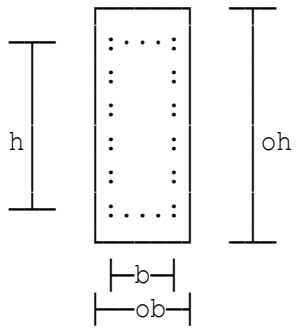

Timber beam exposed on all four sides.

Residual depth of beam	h=oh-2*char=240.5 mm
Residual width of beam	b=ob-2*char=31.5 mm

Timber beam to EC5

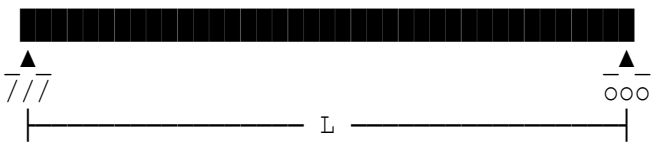

Simply supported beam subject to vertical loads.

Beam span	L=4.5 m
Dist. from left support to start	Lau(1)=0 m
Distance from left support to end	Lbu(1)=4.5 m
Permanent load (unfactored)	Gku(1)=0.35 kN/m
Variable load 1 (unfactored)	Qua(1)=1.75 kN/m

Characteristic values of actions

Permanent:	
Reaction at left hand end	0.7875 kN
Reaction at right hand end	0.7875 kN
Maximum span moment	Mkp=0.88594 kNm
Maximum shear force	Fkp=0.7875 kN
Variable 1:	
Reaction at left hand end	3.9375 kN
Reaction at right hand end	3.9375 kN
Maximum span moment	Mkv1=4.4297 kNm
Maximum shear force	Fkv1=3.9375 kN
Design axial load (+ve compress)	Nd=-3 kN

Section design parameters

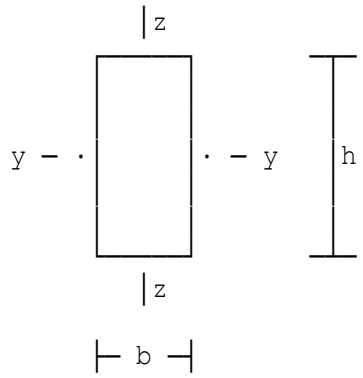

Eff.length for bending about yy	Ley'=0 mm
Eff.length for bending about zz	Lez=0 mm
Length of bearing	lb=100 mm
Bearing modification factor	kc90=1.5
Timber strength class C40.	
Tensile area of cross section	At=5500 mm²
Depth factor (Clause 3.2)	kh=1.0
Load-sharing modification factor	ksys=1.0
No notches exist at the support	kv=1.0
Width modification factor	kw=(150/lardim)^0.2=0.9099
Width modification factor	kw=1.0

	Design bending stress	**19.019 N/mm²**
	Design bending strength	**50 N/mm²**
	Design tension stress	**0.54545 N/mm²**
	Design tension strength	**32.5 N/mm²**
	Interaction factor	**0.39717**
DESIGN	**Deflection**	**24.793 mm**
SUMMARY	**Limiting deflection**	**225 mm**
	Design shear stress	**0.93555 N/mm²**
	Design shear strength	**5 N/mm²**
	Design bearing stress	**1.5 N/mm²**
	Design bearing strength	**5.25 N/mm²**

Location: Timber beam with udl & point loads (4)

Structural design of a timber member for fire resistance

BS EN 1995-1-2:2004 sets out a method for calculating the fire resistance of timber members. Fire resistance of a member is the period of time which the member is required to support the design load without failure whilst subjected to the fire.
The method assumes that a depth of charring occurs around the exposed face of the section, and the corners of the beam become rounded. The residual section is checked for strength and the beam deflection is limited to Span/20 which is the recommended vertical deflection limit given in the EC5 Manual.

Basic fire exposure period	period=60 min
Enter the charring rate βn	betan=0.55
Effective charring depth	char=betan*period+k0*d0=40 mm
Original depth of section	oh=247 mm
Original width of section	ob=97 mm

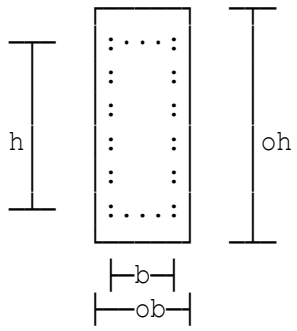

Timber beam exposed on all four sides.

Residual depth of beam	h=oh-2*char=167 mm
Residual width of beam	b=ob-2*char=17 mm

Residual width is less than 2 x char depth so depth of charred corners overlap. Neglect contribution from remaining section below char rounding. Reduced depth of section h=h-2*char=87 mm.

Timber beam to EC5

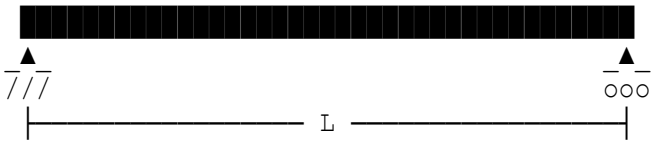

Simply supported beam subject to vertical loads.

Beam span	L=2.4 m
Distance from left support	Lc(1)=1.2 m
Permanent load (unfactored)	Gkc(1)=0.3 kN
Variable load 1 (unfactored)	Qca(1)=0.35 kN

Characteristic values of actions

Permanent:	
Reaction at left hand end	0.15 kN
Reaction at right hand end	0.15 kN
Maximum span moment	Mkp=0.18 kNm
Maximum shear force	Fkp=0.15 kN
Variable 1:	
Reaction at left hand end	0.175 kN
Reaction at right hand end	0.175 kN
Maximum span moment	Mkv1=0.21 kNm
Maximum shear force	Fkv1=0.175 kN
Design axial load (+ve compress)	Nd=0 kN

Section design parameters

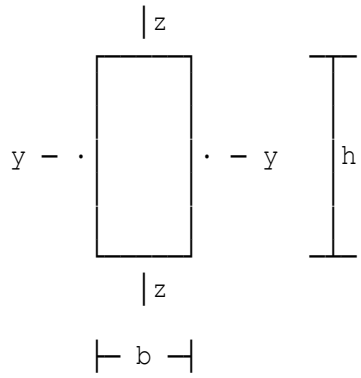

Eff.length for bending about yy	Ley'=0 mm
Eff.length for bending about zz	Lez=0 mm
Length of bearing	lb=75 mm
Bearing modification factor	kc90=1.5
Timber strength class C24.	
Depth factor (Clause 3.2)	kh=(150/h)^0.2=1.1151
Load-sharing modification factor	ksys=1.0
No notches exist at the support	kv=1.0

	Design bending stress	**18.186 N/mm²**
	Design bending strength	**33.453 N/mm²**
DESIGN	**Deflection**	**18.703 mm**
SUMMARY	**Limiting deflection**	**120 mm**
	Design shear stress	**0.32961 N/mm²**
	Design shear strength	**5 N/mm²**
	Design bearing stress	**0.2549 N/mm²**
	Design bearing strength	**4.6875 N/mm²**

Location: Ex1 - Solid timber joists & OSB/3 boarding

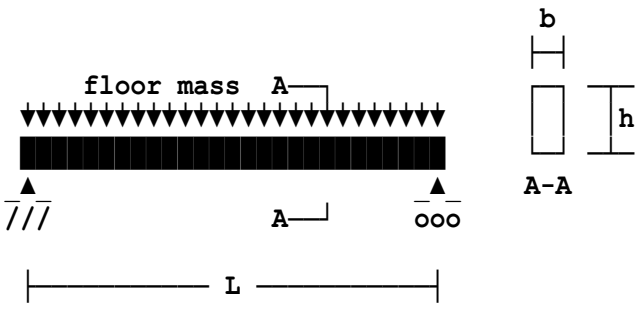

Floor vibration check

Calculations are in accordance with EC5 incorporating NA Amendment No.2. Floor joists assumed to be simply supported and subjected to uniformly distributed loading.

The design requirements in EC5 relate solely to residential floors and the following vibration verifications will need to be considered:

- fundamental frequency check
- static deflection under a point load check
- unit impulse velocity response check.

Effective span of joist	L=3.75 m
Width of floor structure	B=4 m
Joist spacing	s=400 mm
Mass of the floor	mf=35 kg/m²
Depth of section	h=200 mm
Width of section	b=47 mm
Flooring thickness	t=18 mm

Floor joist properties

Floor joist selected are solid timber joists.
Timber strength class C18.
Mean modulus of elasticity E0mean=9000 N/mm²

Flooring properties

Oriented strand board (OSB/3), service class 1 or 2 to BS EN 12369-1.
Mean modulus of elasticity Ef0mean=4930 N/mm²
Amplification factor kamp=1.05
Function value kstrut=1

	Span of floor structure	**3.75 m**
DESIGN	**Width of floor structure**	**4 m**
SUMMARY	**Flooring thickness**	**18 mm**
	Floor fundamental frequency	**15.853 Hz**
	Min allowable frequency	**8 Hz**
	Floor static deflection	**1.466 mm**
	Max allowable static deflection	**1.8 mm**
	Actual unit impulse velocity	**0.024465 m/(Ns²)**
	Max allowable impulse velocity	**0.04267 m/(Ns²)**

Therefore floor is OK.

Location: Ex2 - Solid timber joists & ply flooring

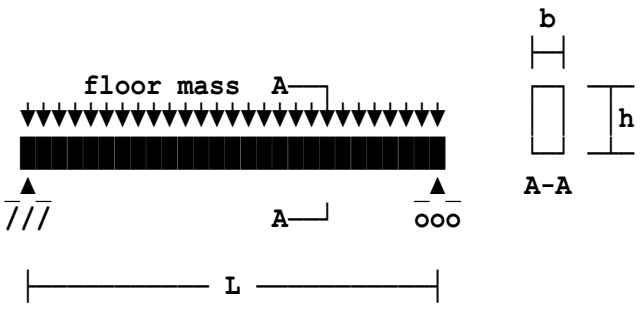

Floor vibration check

Calculations are in accordance with EC5 incorporating NA Amendment No.2. Floor joists assumed to be simply supported and subjected to uniformly distributed loading.

The design requirements in EC5 relate solely to residential floors and the following vibration verifications will need to be considered:

- fundamental frequency check
- static deflection under a point load check
- unit impulse velocity response check.

Effective span of joist	L=3.6 m
Width of floor structure	B=7.2 m
Joist spacing	s=600 mm
Mass of the floor	mf=47.204 kg/m²
Depth of section	h=195 mm
Width of section	b=47 mm
Flooring thickness	t=12 mm

Floor joist properties

Floor joist selected are solid timber joists.
Timber strength class C24.

Mean modulus of elasticity	E0mean=11000 N/mm²

Flooring properties

Mean modulus of elasticity	Ef0mean=11000 N/mm²
Amplification factor	kamp=1.05
Function value	kstrut=1

	Span of floor structure	**3.6 m**
DESIGN	**Width of floor structure**	**7.2 m**
SUMMARY	**Flooring thickness**	**12 mm**
	Floor fundamental frequency	**12.872 Hz**
	Min allowable frequency	**8 Hz**
	Floor static deflection	**1.6652 mm**
	Max allowable static deflection	**1.8 mm**
	Actual unit impulse velocity	**0.025889 m/(Ns²)**
	Max allowable impulse velocity	**0.034431 m/(Ns²)**

Therefore floor is OK.

Location: Ex3 - Domestic floor (thin webbed joists & ply flooring)

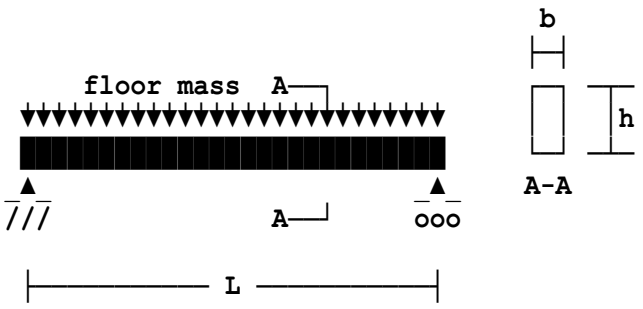

Floor vibration check

Calculations are in accordance with EC5 incorporating NA Amendment No.2. Floor joists assumed to be simply supported and subjected to uniformly distributed loading.

The design requirements in EC5 relate solely to residential floors and the following vibration verifications will need to be considered:

- fundamental frequency check
- static deflection under a point load check
- unit impulse velocity response check.

Effective span of joist	L=3.75 m
Width of floor structure	B=4 m
Joist spacing	s=400 mm
Mass of the floor	mf=35 kg/m²
Flooring thickness	t=18.5 mm

Floor joist properties

Floor joist selected are glued thin webbed joists.
Timber strength class C18.

Mean modulus of elasticity	E0mean=9000 N/mm²

Flooring properties

Plywood to be of service class 1 or 2 to BS EN 12369-1.
Plywood is Canadian Douglas Fir (unsanded).
Plywood comprises 7 plies.

Mean modulus of elasticity	Ef0mean=9620 N/mm²
Second moment of area of a joist	Ijoist=31E6 mm⁴
Amplification factor	kamp=1.05
Function value	kstrut=1

	Span of floor structure	**3.75 m**
DESIGN	**Width of floor structure**	**4 m**
SUMMARY	**Flooring thickness**	**18.5 mm**
	Floor fundamental frequency	**15.769 Hz**
	Min allowable frequency	**8 Hz**
	Floor static deflection	**1.2404 mm**
	Max allowable static deflection	**1.8 mm**
	Actual unit impulse velocity	**0.020666 m/(Ns²)**
	Max allowable impulse velocity	**0.039937 m/(Ns²)**

Therefore floor is OK.

Location: Ex4 - Domestic floor (joists are floor trusses)

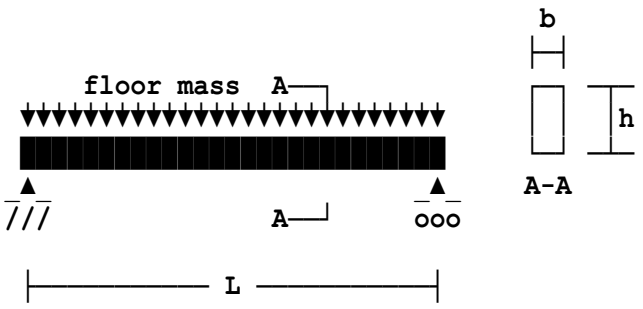

Floor vibration check

Calculations are in accordance with EC5 incorporating NA Amendment No.2. Floor joists assumed to be simply supported and subjected to uniformly distributed loading.

The design requirements in EC5 relate solely to residential floors and the following vibration verifications will need to be considered:

- fundamental frequency check
- static deflection under a point load check
- unit impulse velocity response check.

Effective span of joist	L=3.75 m
Width of floor structure	B=4 m
Joist spacing	s=400 mm
Mass of the floor	mf=35 kg/m²
Flooring thickness	t=18 mm

Floor joist properties

Floor joist selected are mechanically jointed floor trusses.

Mean modulus of elasticity	E0mean=11000 N/mm²

Flooring properties

Mean modulus of elasticity	Ef0mean=4930 N/mm²
Second moment of area of a joist	Ijoist=31E6 mm⁴
Amplification factor	kamp=1.3
Function value	kstrut=1

DESIGN SUMMARY

Span of floor structure	**3.75 m**
Width of floor structure	**4 m**
Flooring thickness	**18 mm**
Floor fundamental frequency	**17.433 Hz**
Min allowable frequency	**8 Hz**
Floor static deflection	**1.501 mm**
Max allowable static deflection	**1.8 mm**
Actual unit impulse velocity	**0.024245 m/(Ns²)**
Max allowable impulse velocity	**0.049823 m/(Ns²)**

Therefore floor is OK.

Location: Ex5 - Domestic floor (glulam beams as floor joists)

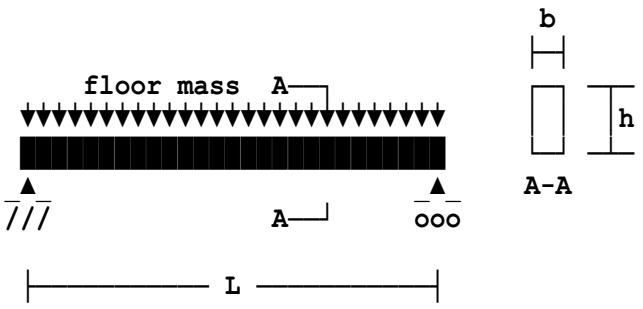

Floor vibration check

Calculations are in accordance with EC5 incorporating NA Amendment No.2. Floor joists assumed to be simply supported and subjected to uniformly distributed loading.

The design requirements in EC5 relate solely to residential floors and the following vibration verifications will need to be considered:

- fundamental frequency check
- static deflection under a point load check
- unit impulse velocity response check.

Effective span of joist	L=5 m
Width of floor structure	B=4 m
Joist spacing	s=600 mm
Mass of the floor	mf=100 kg/m²
Depth of section	h=300 mm
Width of section	b=100 mm
Flooring thickness	t=18 mm

Floor joist properties

Floor joist selected are glulam beams.
Glulam strength class GL24h

Mean modulus of elasticity	E0mean=11500 N/mm²

Flooring properties

Mean modulus of elasticity	Ef0mean=4930 N/mm²
Amplification factor	kamp=1.05
Function value	kstrut=1

	Span of floor structure	**5 m**
DESIGN	**Width of floor structure**	**4 m**
SUMMARY	**Flooring thickness**	**18 mm**
	Floor fundamental frequency	**13.048 Hz**
	Min allowable frequency	**8 Hz**
	Floor static deflection	**0.51584 mm**
	Max allowable static deflection	**1.408 mm**
	Actual unit impulse velocity	**0.010404 m/(Ns²)**
	Max allowable impulse velocity	**0.024764 m/(Ns²)**

Therefore floor is OK.

Location: Ex6 - Domestic floor (stressed skin timber floor joists)

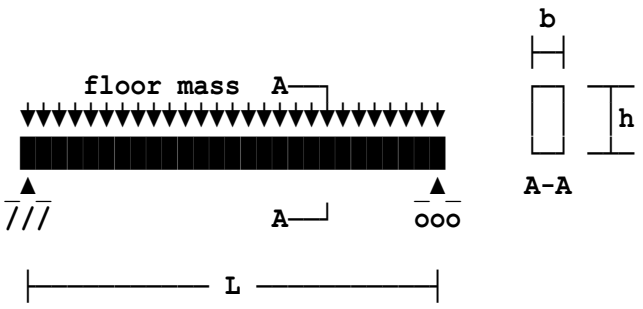

Floor vibration check

Calculations are in accordance with EC5 incorporating NA Amendment No.2. Floor joists assumed to be simply supported and subjected to uniformly distributed loading.

The design requirements in EC5 relate solely to residential floors and the following vibration verifications will need to be considered:

- fundamental frequency check
- static deflection under a point load check
- unit impulse velocity response check.

Effective span of joist	L=5.5 m
Width of floor structure	B=4 m
Joist spacing	s=330 mm
Mass of the floor	mf=35 kg/m²
Depth of section	h=225 mm
Width of section	b=75 mm
Flooring thickness	t=20.5 mm

Floor joist properties

Floor joist selected is a stressed skin timber floor joist.
Mean modulus of elasticity E0mean=11600 N/mm²

Flooring properties

Plywood to be of service class 1 or 2 to BS EN 12369-1.
Plywood is Canadian Douglas Fir (unsanded).
Plywood comprises 7 plies.
Mean modulus of elasticity Ef0mean=8930 N/mm²
Timber strength class C24.
Mean modulus of elasticity E0mean=11000 N/mm²
Amplification factor kamp=1.05
Function value kstrut=1

DESIGN SUMMARY	**Span of floor structure**	**5.5 m**
	Width of floor structure	**4 m**
	Flooring thickness	**20.5 mm**
	Floor fundamental frequency	**14.89 Hz**
	Min allowable frequency	**8 Hz**
	Floor static deflection	**1.2124 mm**
	Max allowable static deflection	**1.2679 mm**
	Actual unit impulse velocity	**0.014556 m/(Ns²)**
	Max allowable impulse velocity	**0.036508 m/(Ns²)**

Therefore floor is OK.

Location: Ex7 - Domestic floor (user defined)

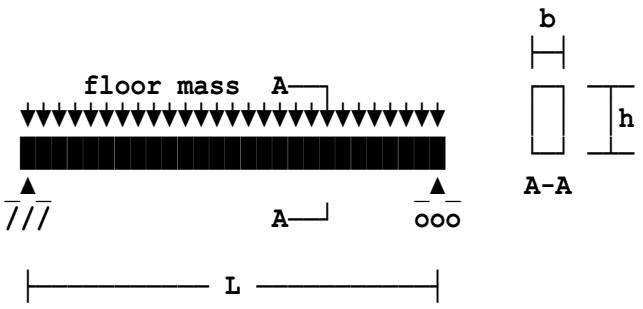

Floor vibration check

Calculations are in accordance with EC5 incorporating NA Amendment No.2. Floor joists assumed to be simply supported and subjected to uniformly distributed loading.

The design requirements in EC5 relate solely to residential floors and the following vibration verifications will need to be considered:

- fundamental frequency check
- static deflection under a point load check
- unit impulse velocity response check.

Effective span of joist	L=3.75 m
Width of floor structure	B=4 m
Joist spacing	s=400 mm
Mass of the floor	mf=35 kg/m²
Flooring thickness	t=18 mm

Floor joist properties

Mean modulus of elasticity	E0mean=11000 N/mm²

Flooring properties

Mean modulus of elasticity	Ef0mean=4930 N/mm²
Second moment of area of a joist	Ijoist=31E6 mm⁴
Amplification factor	kamp=1.05
Function value	kstrut=1

	Span of floor structure	**3.75 m**
DESIGN	**Width of floor structure**	**4 m**
SUMMARY	**Flooring thickness**	**18 mm**
	Floor fundamental frequency	**17.433 Hz**
	Min allowable frequency	**8 Hz**
	Floor static deflection	**1.2124 mm**
	Max allowable static deflection	**1.8 mm**
	Actual unit impulse velocity	**0.024245 m/(Ns²)**
	Max allowable impulse velocity	**0.046399 m/(Ns²)**
	Therefore floor is OK.	

Location: Ex8 - Floor vibrations to EC5

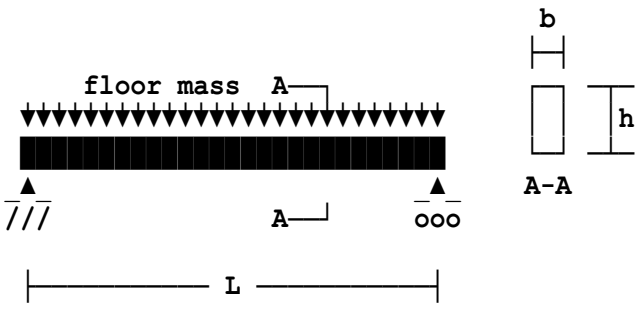

Floor vibration check

Calculations are in accordance with EC5 incorporating NA Amendment No.2. Floor joists assumed to be simply supported and subjected to uniformly distributed loading.

The design requirements in EC5 relate solely to residential floors and the following vibration verifications will need to be considered:

- fundamental frequency check
- static deflection under a point load check
- unit impulse velocity response check.

Effective span of joist	L=1 m
Width of floor structure	B=10 m
Joist spacing	s=100 mm
Mass of the floor	mf=0.05 kg/m²
Flooring thickness	t=10 mm

Floor joist properties

Mean modulus of elasticity	E0mean=13000 N/mm²

Flooring properties

Oriented strand board (OSB/3), service class 1 or 2 to BS EN 12369-1.

Mean modulus of elasticity	Ef0mean=1980 N/mm²
Second moment of area of a joist	Ijoist=5E9 mm⁴
Amplification factor	kamp=1.05
Function value	kstrut=1

	Span of floor structure	**1 m**
DESIGN	**Width of floor structure**	**10 m**
SUMMARY	**Flooring thickness**	**10 mm**
	Floor fundamental frequency	**179098 Hz**
	Min allowable frequency	**8 Hz**
	Floor static deflection	**0.10096E-3 mm**
	Max allowable static deflection	**1.8 mm**
	Actual unit impulse velocity	**0.00798 m/(Ns²)**
	Max allowable impulse velocity	**179.99 m/(Ns²)**
	Therefore floor is OK.	

Location: Ex9 - Floor joists are mechanically jointed floor trusses

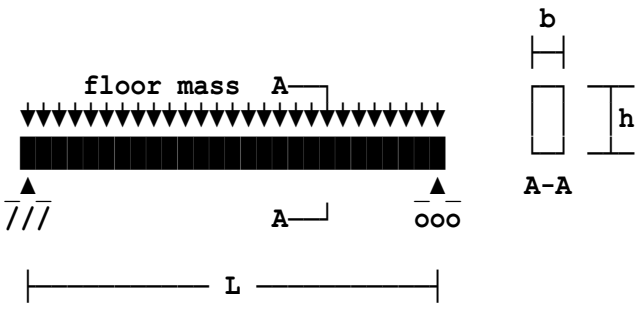

Floor vibration check

Calculations are in accordance with EC5 incorporating NA Amendment No.2. Floor joists assumed to be simply supported and subjected to uniformly distributed loading.

The design requirements in EC5 relate solely to residential floors and the following vibration verifications will need to be considered:

- fundamental frequency check
- static deflection under a point load check
- unit impulse velocity response check.

Effective span of joist	L=3.75 m
Width of floor structure	B=4 m
Joist spacing	s=400 mm
Mass of the floor	mf=35 kg/m²
Flooring thickness	t=18.5 mm

Floor joist properties

Floor joist selected are glued thin webbed joists.
Timber strength class C18.

Mean modulus of elasticity	E0mean=9000 N/mm²

Flooring properties

Plywood to be of service class 1 or 2 to BS EN 12369-1.
Plywood is Canadian Douglas Fir (unsanded).
Plywood comprises 7 plies.

Mean modulus of elasticity	Ef0mean=9620 N/mm²
Second moment of area of a joist	Ijoist=31E6 mm⁴
Amplification factor	kamp=1.3
Function value	kstrut=1

	Span of floor structure	**3.75 m**
DESIGN	**Width of floor structure**	**4 m**
SUMMARY	**Flooring thickness**	**18.5 mm**
	Floor fundamental frequency	**15.769 Hz**
	Min allowable frequency	**8 Hz**
	Floor static deflection	**1.5357 mm**
	Max allowable static deflection	**1.8 mm**
	Actual unit impulse velocity	**0.020666 m/(Ns²)**
	Max allowable impulse velocity	**0.043155 m/(Ns²)**

Therefore floor is OK.

Location: Ex10 - Solid timber joists & OSB/3 boarding

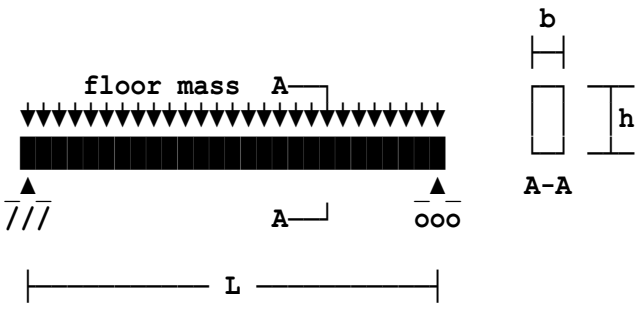

Floor vibration check

Calculations are in accordance with EC5 incorporating NA Amendment No.2. Floor joists assumed to be simply supported and subjected to uniformly distributed loading.

The design requirements in EC5 relate solely to residential floors and the following vibration verifications will need to be considered:

- fundamental frequency check
- static deflection under a point load check
- unit impulse velocity response check.

Effective span of joist	L=3.75 m
Width of floor structure	B=4 m
Joist spacing	s=400 mm
Mass of the floor	mf=35 kg/m²
Depth of section	h=200 mm
Width of section	b=47 mm
Flooring thickness	t=18 mm

Floor joist properties

Floor joist selected are solid timber joists.

Bending parallel to the grain	fmk=30 N/mm²
Compress parallel to the grain	fc0k=24 N/mm²
Compress perp to the grain	fc90k=5.3 N/mm²
Tension parallel to the grain	ft0k=18 N/mm²
Shear parallel to the grain	fvk=3.9 N/mm²
Mean modulus of elasticity	E0mean=11000 N/mm²
5th percentile MOE	E005=9200 N/mm²

Flooring properties

Oriented strand board (OSB/3), service class 1 or 2 to BS EN 12369-1.

Mean modulus of elasticity	Ef0mean=4930 N/mm²
Amplification factor	kamp=1.05
Function value	kstrut=1

	Span of floor structure	**3.75 m**
DESIGN	**Width of floor structure**	**4 m**
SUMMARY	**Flooring thickness**	**18 mm**
	Floor fundamental frequency	**17.526 Hz**
	Min allowable frequency	**8 Hz**
	Floor static deflection	**1.1995 mm**
	Max allowable static deflection	**1.8 mm**
	Actual unit impulse velocity	**0.024231 m/(Ns²)**
	Max allowable impulse velocity	**0.04667 m/(Ns²)**

Therefore floor is OK.

Location: Timber connection default case 1

Timber to timber joint without pre-drilled holes to BS5268-2:2002

Axial load to be carried by joint F=6 kN
Thickness of headside member th=50 mm
Strength class C24 to Table 8.
Timber characteristic density pk1=350 kg/m³
Strength class C24 to Table 8.
Thickness of pointside timber tp=63 mm
Timber characteristic density pk2=350 kg/m³
End grain modification factor K43=1
Diameter of nails d=4.2 mm
Length of nails l=85 mm
Improved nail modification factor K44=1
Basic loads in N will be derived from formula given in Annex G.2.
Equations G1 to G6 in annex G in BS5268-2:2002.

Basic nail shear capacity basic=1*Gmin/(Fd*Kd)=518 N
Mod factor for duration of load K48=1.12
Mod factor for number of nails K50=1

Minimum nail spacings

Edge distance ⊥ to timber grain 21 mm
Timber is a softwood except Douglas fir therefore the spacings given in Table 60 for timber-to-timber joints are multiplied by 0.8.
Edge distance ⊥ to timber grain 21 mm
End distance parallel to grain 68 mm

Joint slip check

Slip per shear plane U=F*1000/Kser=7.2676 mm
Slip per fastener per shear plane Uf=U/n=0.66069 mm

Location: Timber connection default case 2

Timber to timber joint with pre-drilled holes to BS5268-2:2002

Holes not greater than 0.8 of the nail diameter

Axial load to be carried by joint	F=4 kN
Thickness of headside member	th=38 mm
Strength class C18 to Table 8.	
Timber characteristic density	pk1=320 kg/m³
Strength class C22 to Table 8.	
Thickness of pointside timber	tp=38 mm
Timber characteristic density	pk2=340 kg/m³
End grain modification factor	K43=1
Diameter of nails	d=4.6 mm
Length of nails	l=75 mm
Improved nail modification factor	K44=1.2
Basic nail shear capacity	basich=620 N
Basic nail shear capacity	basicp=620 N
Pointside basic load is critical	basic=basicp=500.51 N
Mod factor for duration of load	K48=1
Mod factor for number of nails	K50=0.9

Minimum nail spacings

Edge distance ⊥ to timber grain 23 mm
Timber is a softwood except Douglas fir therefore the spacings given in Table 60 for timber-to-timber joints are multiplied by 0.8.
Edge distance ⊥ to timber grain 23 mm
End distance parallel to grain 52 mm

Joint slip check

Slip per shear plane U=F*1000/Kser=3.0381 mm
Slip per fastener per shear plane Uf=U/n=0.37977 mm

Location: Timber connection default case 3

Steel plate-to-timber joint to BS5268-2:2002

Axial load to be carried by joint F=8 kN
Thickness of headside steel plate th=10 mm
Strength class C24 to Table 8.
Thickness of pointside timber tp=72 mm
Timber characteristic density pk2=350 kg/m³
Diameter of nails d=6 mm
Length of nails l=58 mm
Improved nail modification factor K44=1.2
Basic loads in N will be derived from formula given in Annex G.2.
Equations G1 to G6 in annex G in BS5268-2:2002.

Basic nail shear capacity basic=1*Gmin/(Fd*Kd)=1022 N

Mod factor for duration of load K48=1.25
Mod factor for number of nails K50=1

Minimum nail spacings

Nails are driven at right angles to the glued surface of pre-glued laminated members, therefore the spacings are multiplied by 0.9.
Edge distance ⊥ to timber grain 30 mm
End distance parallel to grain 76 mm

Location: Timber connection default case 4

Plywood to timber joint to BS5268-2:2002 Nails driven into side grain

Axial load to be carried by joint F=15 kN

Plywood group 1 (see Clause 6.1) comprising:
(a) American construction and industrial plywood
(b) Canadian Douglas fir plywood
(c) Canadian softwood plywood
(d) Swedish softwood plywood
(e) Finnish conifer plywood

Thickness of headside member	th=19 mm
Timber characteristic density	pk1=505 kg/m³
Strength class C18 to Table 8.	
Thickness of pointside timber	tp=63 mm
Timber characteristic density	pk2=320 kg/m³
Diameter of nails	d=3.4 mm
Length of nails	l=75 mm

Basic loads in N will be derived from formula given in Annex G.2
Equations G1 to G6 in annex G in BS5268-2:2002.

Basic nail shear capacity	basic=1*Gmin/(Fd*Kd)=280.69 N
Mod factor for duration of load	K48=1.12
Mod factor for number of nails	K50=1

Minimum nail spacings

End distance parallel to grain	48 mm
Edge distance in the plywood	11 mm
Loaded edge distance in timber	17 mm
Distance between lines of nails perpendicular to grain	24 mm
Distance between adjacent nails in any one line, parallel to grain	48 mm

Joint slip check

Slip per shear plane	U=F*1000/Kser=24.611 mm
Slip per fastener per shear plane	Uf=U/n=0.51272 mm

Location: Timber connection default case 5

Particleboard to timber joint in accordance with BS5268-2:2002

Headside is particleboard without pre-drilled holes and nails driven into side grain of timber.

Axial load to be carried by joint	F=2.5 kN
Thickness of headside member	th=18 mm
Strength class C30 to Table 8.	
Thickness of pointside timber	tp=47 mm
Timber characteristic density	pk2=380 kg/m³
Diameter of nails	d=3.8 mm
Length of nails	l=50 mm
Basic single shear lateral load	basic=140 N
Mod factor for duration of load	K48=1.4
Mod factor for number of nails	K50=0.9

Minimum nail spacings

End distance parallel to grain	54 mm
Loaded edge distance in particleboard	23 mm
Unloaded edge distance in timber & part'board	12 mm
Loaded edge distance in timber	19 mm
Distance between lines of nails perpendicular to grain	27 mm
Distance between adjacent nails in any one line, parallel to grain	54 mm

Joint slip check

Slip per shear plane	U=F*1000/Kser=2.8999 mm
Slip per fastener per shear plane	Uf=U/n=0.19332 mm

Location: Timber connection default case 6

Timber joint with nails in withdrawal - design to BS5268-2:2002

Axial load to be carried by joint F=0.5 kN
Strength class C22 to Table 8.

Thickness of pointside timber	tp=75 mm
Timber characteristic density	pk2=340 kg/m³
Diameter of nails	d=3.4 mm
Pointside embedment of nail	pen=65 mm
Improved nail modification factor	K45=1
Basic withdrawal load	Wbasic=1.93 N/mm penetration
Mod factor for duration of load	K48=1.25
Mod factor for number of nails	K50=1
Permissible nail load	pnl=Wbasic*pen*K48*K49*K50=156.81 N
Number of nails required	n=INT(F*1000/pnl)+1=4

Minimum nail spacings

Edge dist perpend to timber grain 17 mm
Timber is a softwood except Douglas fir therefore the spacings given in Table 60 for timber-to-timber joints are multiplied by 0.8.

Edge dist perpend to timber grain	17 mm
End distance parallel to grain	55 mm
Loaded edge distance in timber	17 mm
Distance between lines of nails perpendicular to grain	28 mm
Distance between adjacent nails in any one line, parallel to grain	55 mm

Location: Timber connection default case 4

Plywood to timber joint to BS5268-2:2002 Nails driven into side grain

Axial load to be carried by joint F=1.5 kN

Plywood group 2 (see Clause 6.1) comprising:
(a) Finnish birch-faced plywood
(b) Finnish birch plywood

Thickness of headside member	th=9 mm
Timber characteristic density	pk1=641 kg/m³
Strength class C14 to Table 8.	
Thickness of pointside timber	tp=50 mm
Timber characteristic density	pk2=290 kg/m³
Diameter of nails	d=2.7 mm
Length of nails	l=50 mm

Basic loads in N will be derived from formula given in Annex G.2
Equations G1 to G6 in annex G in BS5268-2:2002.

Basic nail shear capacity basic=1*Gmin/(Fd*Kd)=195.99 N

Mod factor for duration of load K48=1.12
Mod factor for number of nails K50=1

Minimum nail spacings

End distance parallel to grain	38 mm
Edge distance in the plywood	9 mm
Loaded edge distance in timber	14 mm
Distance between lines of nails perpendicular to grain	19 mm
Distance between adjacent nails in any one line, parallel to grain	38 mm

Location: Timber connection default case 2

Timber to timber joint with pre-drilled holes to BS5268-2:2002

Holes not greater than 0.8 of the nail diameter

Axial load to be carried by joint	F=4 kN
Thickness of headside member	th=60 mm
Strength class C30 to Table 8.	
Timber characteristic density	pk1=380 kg/m³
Strength class C30 to Table 8.	
Thickness of pointside timber	tp=75 mm
Timber characteristic density	pk2=380 kg/m³
End grain modification factor	K43=1
Diameter of nails	d=5 mm
Length of nails	l=120 mm
Improved nail modification factor	K44=1.2
Basic nail shear capacity	basich=778 N
Basic nail shear capacity	basicp=778 N
Pointside basic load is critical	basic=basicp=933.6 N
Mod factor for duration of load	K48=1
Mod factor for number of nails	K50=0.9

Minimum nail spacings

Edge distance ⊥ to timber grain 25 mm
Timber is a softwood except Douglas fir therefore the spacings given in Table 60 for timber-to-timber joints are multiplied by 0.8.
Edge distance ⊥ to timber grain 25 mm
End distance parallel to grain 56 mm

Joint slip check

Slip per shear plane	U=F*1000/Kser=2.16 mm
Slip per fastener per shear plane	Uf=U/n=0.43199 mm

Location: Timber connection default case 3

Steel plate-to-timber joint to BS5268-2:2002

Axial load to be carried by joint F=8 kN
Thickness of headside steel plate th=10 mm
Strength class C24 to Table 8.
Thickness of pointside timber tp=125 mm
Timber characteristic density pk2=350 kg/m³
Diameter of nails d=8 mm
Length of nails l=106 mm
Improved nail modification factor K44=1.2
Basic loads in N will be derived from formula given in Annex G.2.
Equations G1 to G6 in annex G in BS5268-2:2002.

Basic nail shear capacity basic=1*Gmin/(Fd*Kd)=1642.9 N

Mod factor for duration of load K48=1.25
Mod factor for number of nails K50=1

Minimum nail spacings

Nails are driven at right angles to the glued surface of pre-glued laminated members, therefore the spacings are multiplied by 0.9.
Edge distance ⊥ to timber grain 40 mm
End distance parallel to grain 101 mm

Location: Timber connection default case 4

Plywood to timber joint to BS5268-2:2002 Nails driven into side grain

Axial load to be carried by joint F=5 kN

Plywood group 1 (see Clause 6.1) comprising:
(a) American construction and industrial plywood
(b) Canadian Douglas fir plywood
(c) Canadian softwood plywood
(d) Swedish softwood plywood
(e) Finnish conifer plywood

Thickness of headside member	th=15 mm
Timber characteristic density	pk1=505 kg/m³
Strength class C14 to Table 8.	
Thickness of pointside timber	tp=63 mm
Timber characteristic density	pk2=290 kg/m³
Diameter of nails	d=3.4 mm
Length of nails	l=65 mm

Basic loads in N will be derived from formula given in Annex G.2
Equations G1 to G6 in annex G in BS5268-2:2002.

Basic nail shear capacity	basic=1*Gmin/(Fd*Kd)=215.24 N
Mod factor for duration of load	K48=1.12
Mod factor for number of nails	K50=1

Minimum nail spacings

End distance parallel to grain	48 mm
Edge distance in the plywood	11 mm
Loaded edge distance in timber	17 mm
Distance between lines of nails perpendicular to grain	24 mm
Distance between adjacent nails in any one line, parallel to grain	48 mm

Joint slip check

Slip per shear plane	U=F*1000/Kser=9.5089 mm
Slip per fastener per shear plane	Uf=U/n=0.4528 mm

Location: Timber connection default case 1

Timber to timber joint without pre-drilled holes to BS5268-2:2002

Axial load to be carried by joint F=6 kN
Thickness of headside member th=50 mm
Strength class C22 to Table 8.
Timber characteristic density pk1=340 kg/m³
Strength class C24 to Table 8.
Thickness of pointside timber tp=50 mm
Timber characteristic density pk2=350 kg/m³
End grain modification factor K43=1
Diameter of nails d=4.2 mm
Length of nails l=90 mm
Improved nail modification factor K44=1
Basic loads in N will be derived from formula given in Annex G.2.
Equations G1 to G6 in annex G in BS5268-2:2002.

Basic nail shear capacity basic=1*Gmin/(Fd*Kd)=563.24 N
Mod factor for duration of load K48=1.12
Mod factor for number of nails K50=1

Minimum nail spacings

Edge distance ⊥ to timber grain 21 mm
Timber is a softwood except Douglas fir therefore the spacings given in Table 60 for timber-to-timber joints are multiplied by 0.8.
Edge distance ⊥ to timber grain 21 mm
End distance parallel to grain 68 mm

Joint slip check

Slip per shear plane U=F*1000/Kser=7.5906 mm
Slip per fastener per shear plane Uf=U/n=0.75906 mm

Location: Timber connection default case 1

Timber-to-timber joint without pre-drilled holes to EC5

Characteristic permanent load Gk=3 kN
Characteristic variable load Qk=3 kN

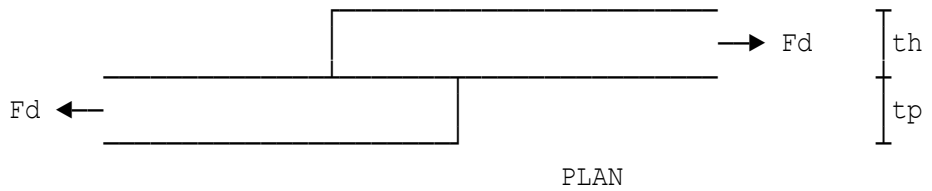

Thickness of headside member th=50 mm
Timber strength class C24.
Timber characteristic density pk1=350 kg/m³
Timber strength class C24.
Thickness of pointside timber tp=63 mm
Timber characteristic density pk2=350 kg/m³
Diameter of nails d=4.2 mm
Length of nails l=85 mm
Basic loads will be derived from expressions given in Section 8 assuming round nails.
Expressions (a)-(f) for fasteners in single shear refer to section 8.2.2 in EC5. Zero contribution from rope effect will be considered.
Equations a b c d e f
Min value of equations (a)-(f) Gmin=1173.5
Char nail shear capacity basic=Gmin=1173.5 N
Material factor for connections gamM=1.3
Design resistance per nail pnl=kmod*basic/gamM=722.17 N
Number of nails required n=INT(Fd*1000/pnl)+1=12

Minimum nail spacings - EC5 Table 8.2 & Figure 8.7

Minimum spacing of nails within
one row parallel to grain a1=(5+5*COS(alpha))*d=42 mm
Actual spacing of nails within
one row parallel to grain a1=42 mm
Spacing of rows of nails
perpendicular to grain a2=5*d=21 mm
End distance (loaded) a3t=(10+5*COS(alpha))*d=63 mm
End distance (unloaded) a3c=10*d=42 mm
Edge distance (loaded) a4t=(5+2*SIN(alpha))*d=21 mm
Edge distance (unloaded) a4c=(5+5*SIN(alpha))*d=21 mm

Joint slip check - EC5 Section 7

Total instantaneous slip SLS utser=2*uiser=1.4535 mm
Total instantaneous slip ULS utuls=2*uiult=2.0713 mm
Psi 2 factor (variable action) psi2v=0.3
ufser=2*(uiser*Gk'/Fdser*(1+psi2p*kdef)+uiser*Qk'/Fdser*(1+psi2v
*kdef))=2.0204 mm
ufult=2*(uiult*Gk'/Fdser*(1+psi2p*kdef)+uiult*Qk'/Fdser*(1+psi2v
*kdef))=2.8791 mm

DESIGN SUMMARY	**Design axial load**	**8.55 kN**
	Headside member thickness	**50 mm**
	Pointside member thickness	**63 mm**
	Number of nails required	**12**
	Diameter of nails	**4.2 mm**
	Length of smooth nails	**85 mm**

Nails should comply with BS EN 14592 and should have a minimum ultimate tensile strength of 600 N/mm². Pre-drilled holes are not required.
In order to eliminate the effect of number of nails in a row the minimum spacing of nails in a row parallel to grain needs to be 58.8 mm.

Location: Timber connection default case 2

Timber-to-timber joint with pre-drilled holes to EC5

Holes not greater than 0.8 of the nail diameter

Characteristic permanent load Gk=2 kN
Characteristic variable load Qk=2 kN

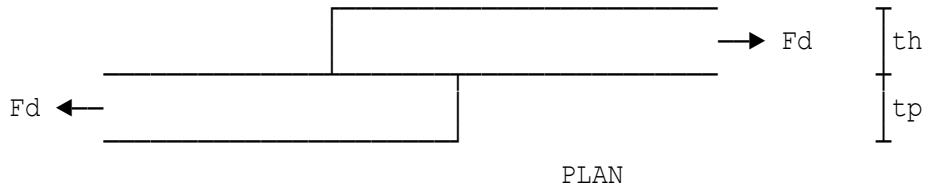

Thickness of headside member th=38 mm
Timber strength class C22.
Timber characteristic density pk1=340 kg/m³
Timber strength class C22.
Thickness of pointside timber tp=38 mm
Timber characteristic density pk2=340 kg/m³
Diameter of nails d=4.6 mm
Length of nails l=75 mm
Basic loads in N will be derived from expressions given in Section 8 assuming round nails.
Expressions (a)-(f) for fasteners in single shear refer to section 8.2.2 in EC5. Zero contribution from rope effect will be considered.
Equations a b c d e f
Min value of equations (a)-(f) Gmin=1754.8

Char nail shear capacity basic=Gmin=1754.8 N
Material factor for connections gamM=1.3
Design resistance per nail pnl=kmod*basic/gamM=1079.9 N
Number of nails required n=INT(Fd*1000/pnl)+1=6

Minimum nail spacings - EC5 Table 8.2 & Figure 8.7

Spacing of nails within one row parallel to grain a1=(4+COS(alpha))*d=23 mm
Actual spacing of nails within one row parallel to grain a1=23 mm
Spacing of rows of nails perpendicular to grain a2=(3+SIN(alpha))*d=13.8 mm
End distance (loaded) a3t=(7+5*COS(alpha))*d=55.2 mm
End distance (unloaded) a3c=7*d=32.2 mm
Edge distance (loaded) a4t=(3+2*SIN(alpha))*d=13.8 mm
Edge distance (unloaded) a4c=3*d=13.8 mm

Joint slip check - EC5 Section 7

Total instantaneous slip SLS utser=2*uiser=1.0634 mm
Total instantaneous slip ULS utuls=2*uiult=1.5153 mm
Psi 2 factor (variable action) psi2v=0.3

```
ufser=2*(uiser*Gk'/Fdser*(1+psi2p*kdef)+uiser*Qk'/Fdser*(1+psi2v
      *kdef))=1.6163 mm
ufult=2*(uiult*Gk'/Fdser*(1+psi2p*kdef)+uiult*Qk'/Fdser*(1+psi2v
      *kdef))=2.3033 mm
```

DESIGN SUMMARY	**Design axial load**	**5.7 kN**
	Headside member thickness	**38 mm**
	Pointside member thickness	**38 mm**
	Number of nails required	**6**
	Diameter of nails	**4.6 mm**
	Length of smooth nails	**75 mm**

Nails should comply with BS EN 14592 and should have a minimum ultimate tensile strength of 600 N/mm². Provide pre-drilled holes.
In order to eliminate the effect of number of nails in a row the minimum spacing of nails in a row parallel to grain needs to be 64.4 mm.

Location: Timber connection default case 3

Steel plate-to-timber joint to EC5

Characteristic permanent load Gk=4 kN
Characteristic variable load Qk=4 kN

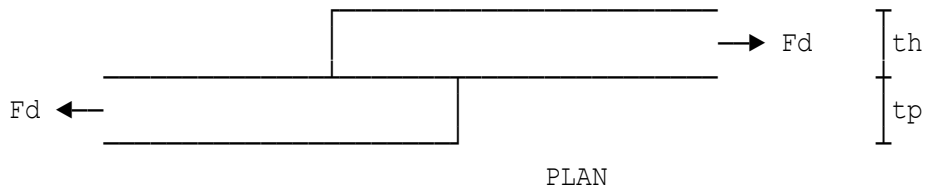

Thickness of headside steel plate th=10 mm
Timber strength class C24.
Thickness of pointside timber tp=72 mm
Timber characteristic density pk2=350 kg/m³
Diameter of nails d=6 mm
Length of nails l=58 mm
Basic loads in N will be derived from expressions given in Section 8 assuming round nails.
Expressions (a) to (e) for fasteners in single shear refer to section 8.2.3 in EC5. Zero contribution from rope effect will be considered.
Min value of equations (a)-(e) Gmin=2538.3

Char nail shear capacity basic=Gmin=2538.3 N
Material factor for connections gamM=1.3
Design resistance per nail pnl=kmod*basic/gamM=1269.2 N
Number of nails required n=INT(Fd*1000/pnl)+1=9

Minimum nail spacings - EC5 Table 8.2 & Figure 8.7

Minimum spacing of nails within
one row parallel to grain a1=(5+7*COS(alpha))*d=72 mm
Actual spacing of nails within
one row parallel to grain a1=72 mm
Spacing of rows of nails
perpendicular to grain a2=5*d=30 mm
End distance (loaded) a3t=(10+5*COS(alpha))*d=90 mm
End distance (unloaded) a3c=10*d=60 mm
Edge distance (loaded) a4t=(5+2*SIN(alpha))*d=30 mm
Edge distance (unloaded) a4c=(5+5*SIN(alpha))*d=30 mm

Joint slip check - EC5 Section 7

Total instantaneous slip SLS utser=2*uiser=0.97128 mm
Total instantaneous slip ULS utuls=2*uiult=1.3841 mm
Psi 2 factor (variable action) psi2v=0.3
ufser=2*(uiser*Gk'/Fdser*(1+psi2p*kdef)+uiser*Qk'/Fdser*(1+psi2v
*kdef))=2.234 mm
ufult=2*(uiult*Gk'/Fdser*(1+psi2p*kdef)+uiult*Qk'/Fdser*(1+psi2v
*kdef))=3.1834 mm

DESIGN SUMMARY	**Design axial load**	**11.4 kN**
	Headside member thickness	**10 mm**
	Pointside member thickness	**72 mm**
	Number of nails required	**9**
	Diameter of nails	**6 mm**
	Length of smooth nails	**58 mm**

Nails should comply with BS EN 14592 and should have a minimum ultimate tensile strength of 600 N/mm². Pre-drilled holes are not required.
In order to eliminate the effect of number of nails in a row the minimum spacing of nails in a row parallel to grain needs to be 84 mm.

Location: Timber connection default case 4

Plywood-to-timber joint to EC5 nails driven into side grain

Characteristic permanent load Gk=7.5 kN
Characteristic variable load Qk=7.5 kN

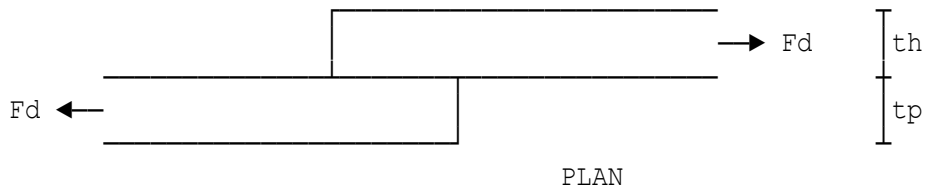

Plywood group 1 comprising:
(a) American construction and industrial plywood
(b) Canadian Douglas fir plywood
(c) Canadian softwood plywood
(d) Swedish softwood plywood
(e) Finnish conifer plywood
Thickness of headside member th=19 mm
Timber characteristic density pk1=505 kg/m³
Timber strength class C18.
Thickness of pointside timber tp=63 mm
Timber characteristic density pk2=320 kg/m³
Diameter of nails d=3.4 mm
Length of nails l=75 mm
Basic loads in N will be derived from expressions given in Section 8 assuming round nails.
Expressions (a)-(f) for fasteners in single shear refer to section 8.2.2 in EC5. Zero contribution from rope effect will be considered.
Equations a b c d e f
Min value of equations (a)-(f) Gmin=925.51

Char nail shear capacity basic=Gmin=925.51 N
Material factor for connections gamM=1.3
Design resistance per nail pnl=kmod*basic/gamM=569.55 N
Number of nails required n=INT(Fd*1000/pnl)+1=38

Minimum nail spacings - EC5 Table 8.2 & Figure 8.7

Minimum spacing of nails within
one row parallel to grain a1=(5+5*COS(alpha))*d=34 mm
Actual spacing of nails within
one row parallel to grain a1=34 mm
Spacing of rows of nails
perpendicular to grain a2=5*d=17 mm
End distance (loaded) a3t=(10+5*COS(alpha))*d=51 mm
End distance (unloaded) a3c=10*d=34 mm
Edge distance (loaded) a4t=(5+2*SIN(alpha))*d=17 mm
Edge distance (unloaded) a4c=(5+5*SIN(alpha))*d=17 mm

Joint slip check - EC5 Section 7

Total instantaneous slip SLS utser=2*uiser=1.5544 mm
Total instantaneous slip ULS utuls=2*uiult=2.215 mm
Psi 2 factor (variable action) psi2v=0.3
ufser=2*(uiser*Gk'/Fdser*(1+psi2p*kdef)+uiser*Qk'/Fdser*(1+psi2v
*kdef))=2.1606 mm
ufult=2*(uiult*Gk'/Fdser*(1+psi2p*kdef)+uiult*Qk'/Fdser*(1+psi2v
*kdef))=3.0788 mm

DESIGN SUMMARY	**Design axial load**	**21.375 kN**
	Headside member thickness	**19 mm**
	Pointside member thickness	**63 mm**
	Number of nails required	**38**
	Diameter of nails	**3.4 mm**
	Length of smooth nails	**75 mm**

Nails should comply with BS EN 14592 and should have a minimum ultimate tensile strength of 600 N/mm². Pre-drilled holes are not required.
In order to eliminate the effect of number of nails in a row the minimum spacing of nails in a row parallel to grain needs to be 47.6 mm.

Location: Timber connection default case 5

Particleboard to timber joint in accordance with EC5

Headside is particleboard without pre-drilled holes and nails are driven into side grain of timber.
Characteristic permanent load Gk=1.25 kN
Characteristic variable load Qk=1.25 kN

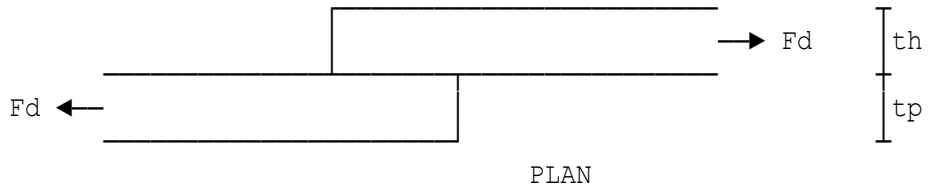

Thickness of headside member th=18 mm
Particleboard char density pk1=400 kg/m³
Timber strength class C30.
Thickness of pointside timber tp=47 mm
Timber characteristic density pk2=380 kg/m³
Diameter of nails d=3.8 mm
Length of nails l=50 mm
Basic loads in N will be derived from expressions given in Section 8 assuming round nails.
Expressions (a)-(f) for fasteners in single shear refer to section 8.2.2 in EC5. Zero contribution from rope effect will be considered.
Equations a b c d e f
Min value of equations (a)-(f) Gmin=1010.3

Char nail shear capacity basic=Gmin=1010.3 N
Material factor for connections gamM=1.3
Design resistance per nail pnl=kmod*basic/gamM=621.75 N
Number of nails required n=INT(Fd*1000/pnl)+1=6

Minimum nail spacings - EC5 Table 8.2 & Figure 8.7

Minimum spacing of nails within one row parallel to grain a1=(5+5*COS(alpha))*d=38 mm
Actual spacing of nails within one row parallel to grain a1=38 mm
Spacing of rows of nails perpendicular to grain a2=5*d=19 mm
End distance (loaded) a3t=(10+5*COS(alpha))*d=57 mm
End distance (unloaded) a3c=10*d=38 mm
Edge distance (loaded) a4t=(5+2*SIN(alpha))*d=19 mm
Edge distance (unloaded) a4c=(5+5*SIN(alpha))*d=19 mm

Joint slip check - EC5 Section 7

Total instantaneous slip SLS utser=2*uiser=1.1599 mm
Total instantaneous slip ULS utuls=2*uiult=1.6529 mm
Psi 2 factor (variable action) psi2v=0.3
ufser=2*(uiser*Gk'/Fdser*(1+psi2p*kdef)+uiser*Qk'/Fdser*(1+psi2v *kdef))=1.7631 mm

```
ufult=2*(uiult*Gk'/Fdser*(1+psi2p*kdef)+uiult*Qk'/Fdser*(1+psi2v
      *kdef))=2.5124 mm
```

DESIGN SUMMARY	**Design axial load**	**3.5625 kN**
	Headside member thickness	**18 mm**
	Pointside member thickness	**47 mm**
	Number of nails required	**6**
	Diameter of nails	**3.8 mm**
	Length of smooth nails	**50 mm**

Nails should comply with BS EN 14592 and should have a minimum ultimate tensile strength of 600 N/mm². Pre-drilled holes are not required.
In order to eliminate the effect of number of nails in a row the minimum spacing of nails in a row parallel to grain needs to be 53.2 mm.

Location: Timber connection default case 6

Timber joint with nails in withdrawal to EC5

Characteristic permanent load	Gk=0.25 kN
Characteristic variable load	Qk=0.25 kN
Thickness of headside member	th=50 mm
Timber strength class C22.	
Thickness of pointside timber	tp=75 mm
Timber characteristic density	pk2=340 kg/m³
Diameter of nails	d=3.4 mm
Pointside embedment of nail	pen=65 mm
Nail head diameter	dh=7.65 mm
Material factor for connections	gamM=1.3
Nail design withdrawal capacity	FaxRd=kmod*FaxRk*wcrf/gamM=314.43 N
Number of nails required	n=INT(Fd*1000/FaxRd)+1=3

Minimum nail spacings - EC5 Table 8.2 & Figure 8.7

Minimum spacing of nails within one row parallel to grain	a1=(5+5*COS(alpha))*d=34 mm
Actual spacing of nails within one row parallel to grain	a1=34 mm
Spacing of rows of nails perpendicular to grain	a2=5*d=17 mm
End distance (loaded)	a3t=(10+5*COS(alpha))*d=51 mm
End distance (unloaded)	a3c=10*d=34 mm
Edge distance (loaded)	a4t=(5+2*SIN(alpha))*d=17 mm
Edge distance (unloaded)	a4c=(5+5*SIN(alpha))*d=17 mm

DESIGN SUMMARY	**Design axial load**	**0.7125 kN**
	Headside member thickness	**50 mm**
	Pointside member thickness	**75 mm**
	Number of nails required	**3**
	Diameter of nails	**3.4 mm**
	Length of smooth nails	**115 mm**

Nails should comply with BS EN 14592 and should have a minimum ultimate tensile strength of 600 N/mm². Pre-drilled holes are not required.
In order to eliminate the effect of number of nails in a row the minimum spacing of nails in a row parallel to grain needs to be 47.6 mm.

Location: Timber connection default case 4

Plywood-to-timber joint to EC5 nails driven into side grain

Characteristic permanent load Gk=0.75 kN
Characteristic variable load Qk=0.75 kN

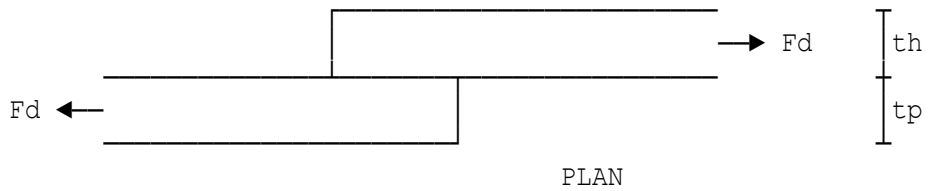

Plywood group 2 comprising:
(a) Finnish birch-faced plywood
(b) Finnish birch plywood
Thickness of headside member th=9 mm
Timber characteristic density pk1=641 kg/m³
Timber strength class C14.
Thickness of pointside timber tp=50 mm
Timber characteristic density pk2=290 kg/m³
Diameter of nails d=2.7 mm
Length of nails l=50 mm
Basic loads in N will be derived from expressions given in Section 8 assuming round nails.
Expressions (a)-(f) for fasteners in single shear refer to section 8.2.2 in EC5. Zero contribution from rope effect will be considered.
Equations a b c d e f
Min value of equations (a)-(f) Gmin=564.44

Char nail shear capacity basic=Gmin=564.44 N
Material factor for connections gamM=1.3
Design resistance per nail pnl=kmod*basic/gamM=282.22 N
Number of nails required n=INT(Fd*1000/pnl)+1=8

Minimum nail spacings - EC5 Table 8.2 & Figure 8.7

Spacing of nails within one row parallel to grain a1=(4+COS(alpha))*d=13.5 mm
Actual spacing of nails within one row parallel to grain a1=13.5 mm
Spacing of rows of nails perpendicular to grain a2=(3+SIN(alpha))*d=8.1 mm
End distance (loaded) a3t=(7+5*COS(alpha))*d=32.4 mm
End distance (unloaded) a3c=7*d=18.9 mm
Edge distance (loaded) a4t=(3+2*SIN(alpha))*d=8.1 mm
Edge distance (unloaded) a4c=3*d=8.1 mm

Joint slip check - EC5 Section 7

Total instantaneous slip SLS utser=2*uiser=0.64684 mm
Total instantaneous slip ULS utuls=2*uiult=0.92175 mm

```
Psi 2 factor (variable action)    psi2v=0.3
ufser=2*(uiser*Gk'/Fdser*(1+psi2p*kdef)+uiser*Qk'/Fdser*(1+psi2v
      *kdef))=1.4877 mm
ufult=2*(uiult*Gk'/Fdser*(1+psi2p*kdef)+uiult*Qk'/Fdser*(1+psi2v
      *kdef))=2.12 mm
```

DESIGN SUMMARY	**Design axial load**	**2.1375 kN**
	Headside member thickness	**9 mm**
	Pointside member thickness	**50 mm**
	Number of nails required	**8**
	Diameter of nails	**2.7 mm**
	Length of smooth nails	**50 mm**

Nails should comply with BS EN 14592 and should have a minimum ultimate tensile strength of 600 N/mm². Provide pre-drilled holes.
In order to eliminate the effect of number of nails in a row the minimum spacing of nails in a row parallel to grain needs to be 37.8 mm.

Location: Timber connection default case 2

Timber-to-timber joint with pre-drilled holes to EC5

Holes not greater than 0.8 of the nail diameter

Characteristic permanent load Gk=2 kN
Characteristic variable load Qk=2 kN

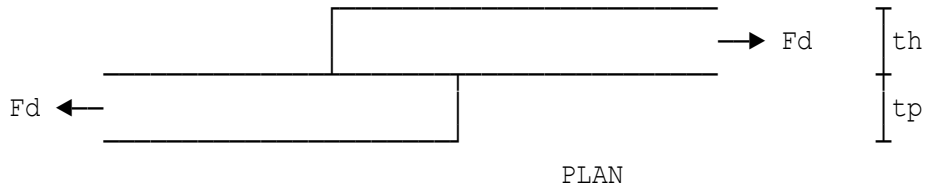

Thickness of headside member th=60 mm
Timber strength class C30.
Timber characteristic density pk1=380 kg/m³
Timber strength class C30.
Thickness of pointside timber tp=75 mm
Timber characteristic density pk2=380 kg/m³
Diameter of nails d=5 mm
Length of nails l=120 mm
Basic loads in N will be derived from expressions given in Section 8 assuming round nails.
Expressions (a)-(f) for fasteners in single shear refer to section 8.2.2 in EC5. Zero contribution from rope effect will be considered.
Equations a b c d e f
Min value of equations (a)-(f) Gmin=2151.1

Char nail shear capacity basic=Gmin=2151.1 N
Material factor for connections gamM=1.3
Design resistance per nail pnl=kmod*basic/gamM=1323.7 N
Number of nails required n=INT(Fd*1000/pnl)+1=5

Minimum nail spacings - EC5 Table 8.2 & Figure 8.7

Spacing of nails within one row parallel to grain a1=(4+COS(alpha))*d=25 mm
Actual spacing of nails within one row parallel to grain a1=25 mm
Spacing of rows of nails perpendicular to grain a2=(3+SIN(alpha))*d=15 mm
End distance (loaded) a3t=(7+5*COS(alpha))*d=60 mm
End distance (unloaded) a3c=7*d=35 mm
Edge distance (loaded) a4t=(3+4*SIN(alpha))*d=15 mm
Edge distance (unloaded) a4c=3*d=15 mm

Joint slip check - EC5 Section 7

Total instantaneous slip SLS utser=2*uiser=0.99358 mm
Total instantaneous slip ULS utuls=2*uiult=1.4159 mm
Psi 2 factor (variable action) psi2v=0.3

```
ufser=2*(uiser*Gk'/Fdser*(1+psi2p*kdef)+uiser*Qk'/Fdser*(1+psi2v
      *kdef))=1.5102 mm
ufult=2*(uiult*Gk'/Fdser*(1+psi2p*kdef)+uiult*Qk'/Fdser*(1+psi2v
      *kdef))=2.1521 mm
```

DESIGN SUMMARY	**Design axial load**	**5.7 kN**
	Headside member thickness	**60 mm**
	Pointside member thickness	**75 mm**
	Number of nails required	**5**
	Diameter of nails	**5 mm**
	Length of smooth nails	**120 mm**

Nails should comply with BS EN 14592 and should have a minimum ultimate tensile strength of 600 N/mm². Provide pre-drilled holes.
In order to eliminate the effect of number of nails in a row the minimum spacing of nails in a row parallel to grain needs to be 70 mm.

Location: Timber connection default case 3

Steel plate-to-timber joint to EC5

Characteristic permanent load Gk=4 kN
Characteristic variable load Qk=4 kN

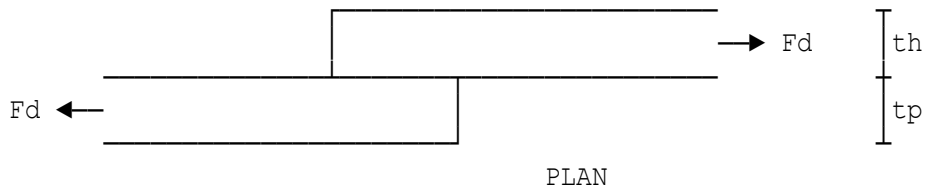

Thickness of headside steel plate th=10 mm
Timber strength class C24.
Thickness of pointside timber tp=125 mm
Timber characteristic density pk2=350 kg/m³
Diameter of nails d=8 mm
Length of nails l=106 mm
Basic loads in N will be derived from expressions given in Section 8 assuming round nails.
Expressions (a) to (e) for fasteners in single shear refer to section 8.2.3 in EC5. Zero contribution from rope effect will be considered.
Min value of equations (a)-(e) Gmin=5473.5

Char nail shear capacity basic=Gmin=5473.5 N
Material factor for connections gamM=1.3
Design resistance per nail pnl=kmod*basic/gamM=2736.7 N
Number of nails required n=INT(Fd*1000/pnl)+1=5

Minimum nail spacings - EC5 Table 8.2 & Figure 8.7

Minimum spacing of nails within
one row parallel to grain a1=(5+7*COS(alpha))*d=96 mm
Actual spacing of nails within
one row parallel to grain a1=96 mm
Spacing of rows of nails
perpendicular to grain a2=5*d=40 mm
End distance (loaded) a3t=(10+5*COS(alpha))*d=120 mm
End distance (unloaded) a3c=10*d=80 mm
Edge distance (loaded) a4t=(5+2*SIN(alpha))*d=40 mm
Edge distance (unloaded) a4c=(5+5*SIN(alpha))*d=40 mm

Joint slip check - EC5 Section 7

Total instantaneous slip SLS utser=2*uiser=1.3889 mm
Total instantaneous slip ULS utuls=2*uiult=1.9792 mm
Psi 2 factor (variable action) psi2v=0.3
ufser=2*(uiser*Gk'/Fdser*(1+psi2p*kdef)+uiser*Qk'/Fdser*(1+psi2v
*kdef))=3.1944 mm
ufult=2*(uiult*Gk'/Fdser*(1+psi2p*kdef)+uiult*Qk'/Fdser*(1+psi2v
*kdef))=4.5521 mm

DESIGN SUMMARY	**Design axial load**	**11.4 kN**
	Headside member thickness	**10 mm**
	Pointside member thickness	**125 mm**
	Number of nails required	**5**
	Diameter of nails	**8 mm**
	Length of smooth nails	**106 mm**

Nails should comply with BS EN 14592 and should have a minimum ultimate tensile strength of 600 N/mm². Pre-drilled holes are not required.
In order to eliminate the effect of number of nails in a row the minimum spacing of nails in a row parallel to grain needs to be 112 mm.

Location: Timber connection default case 4

Plywood-to-timber joint to EC5 nails driven into side grain

Characteristic permanent load Gk=2.5 kN
Characteristic variable load Qk=2.5 kN

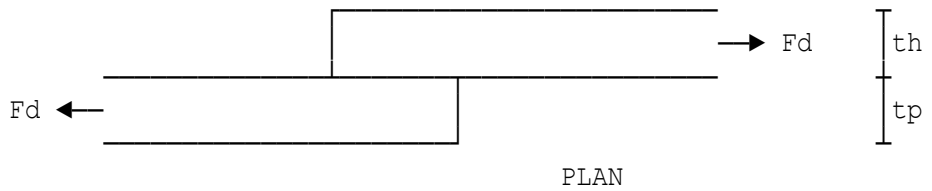

Plywood group 1 comprising:
(a) American construction and industrial plywood
(b) Canadian Douglas fir plywood
(c) Canadian softwood plywood
(d) Swedish softwood plywood
(e) Finnish conifer plywood
Thickness of headside member th=15 mm
Timber characteristic density pk1=505 kg/m³
Timber strength class C14.
Thickness of pointside timber tp=63 mm
Timber characteristic density pk2=290 kg/m³
Diameter of nails d=3.4 mm
Length of nails l=65 mm
Basic loads in N will be derived from expressions given in Section 8 assuming round nails.
Expressions (a)-(f) for fasteners in single shear refer to section 8.2.2 in EC5. Zero contribution from rope effect will be considered.
Equations a b c d e f
Min value of equations (a)-(f) Gmin=786.36

Char nail shear capacity basic=Gmin=786.36 N
Material factor for connections gamM=1.3
Design resistance per nail pnl=kmod*basic/gamM=483.91 N
Number of nails required n=INT(Fd*1000/pnl)+1=15

Minimum nail spacings - EC5 Table 8.2 & Figure 8.7

Minimum spacing of nails within
one row parallel to grain a1=(5+5*COS(alpha))*d=34 mm
Actual spacing of nails within
one row parallel to grain a1=34 mm
Spacing of rows of nails
perpendicular to grain a2=5*d=17 mm
End distance (loaded) a3t=(10+5*COS(alpha))*d=51 mm
End distance (unloaded) a3c=10*d=34 mm
Edge distance (loaded) a4t=(5+2*SIN(alpha))*d=17 mm
Edge distance (unloaded) a4c=(5+5*SIN(alpha))*d=17 mm

Joint slip check - EC5 Section 7

Total instantaneous slip SLS utser=2*uiser=1.5214 mm
Total instantaneous slip ULS utuls=2*uiult=2.168 mm
Psi 2 factor (variable action) psi2v=0.3
ufser=2*(uiser*Gk'/Fdser*(1+psi2p*kdef)+uiser*Qk'/Fdser*(1+psi2v
*kdef))=2.1148 mm
ufult=2*(uiult*Gk'/Fdser*(1+psi2p*kdef)+uiult*Qk'/Fdser*(1+psi2v
*kdef))=3.0136 mm

DESIGN SUMMARY	**Design axial load**	**7.125 kN**
	Headside member thickness	**15 mm**
	Pointside member thickness	**63 mm**
	Number of nails required	**15**
	Diameter of nails	**3.4 mm**
	Length of smooth nails	**65 mm**

Nails should comply with BS EN 14592 and should have a minimum ultimate tensile strength of 600 N/mm². Pre-drilled holes are not required.
In order to eliminate the effect of number of nails in a row the minimum spacing of nails in a row parallel to grain needs to be 47.6 mm.

Location: Timber connection default case 1

Timber-to-timber joint without pre-drilled holes to EC5

Characteristic permanent load Gk=3 kN
Characteristic variable load Qk=3 kN

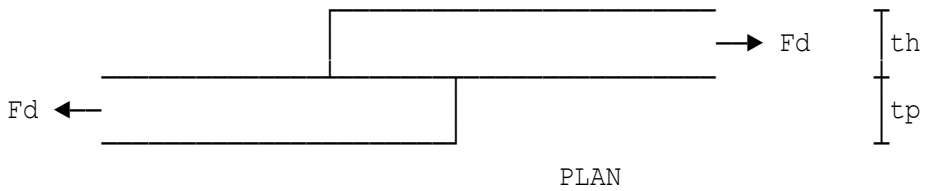

Thickness of headside member th=50 mm
Timber strength class C22.
Timber characteristic density pk1=340 kg/m³
Timber strength class C22.
Thickness of pointside timber tp=50 mm
Timber characteristic density pk2=340 kg/m³
Diameter of nails d=4.2 mm
Length of nails l=90 mm
Basic loads will be derived from expressions given in Section 8 assuming round nails.
Expressions (a)-(f) for fasteners in single shear refer to section 8.2.2 in EC5. Zero contribution from rope effect will be considered.
Equations a b c d e f
Min value of equations (a)-(f) Gmin=1229.9
Char nail shear capacity basic=Gmin=1229.9 N
Material factor for connections gamM=1.3
Design resistance per nail pnl=kmod*basic/gamM=756.84 N
Number of nails required n=INT(Fd*1000/pnl)+1=12

Minimum nail spacings - EC5 Table 8.2 & Figure 8.7

Minimum spacing of nails within
one row parallel to grain a1=(5+5*COS(alpha))*d=42 mm
Actual spacing of nails within
one row parallel to grain a1=42 mm
Spacing of rows of nails
perpendicular to grain a2=5*d=21 mm
End distance (loaded) a3t=(10+5*COS(alpha))*d=63 mm
End distance (unloaded) a3c=10*d=42 mm
Edge distance (loaded) a4t=(5+2*SIN(alpha))*d=21 mm
Edge distance (unloaded) a4c=(5+5*SIN(alpha))*d=21 mm

Joint slip check - EC5 Section 7

Total instantaneous slip SLS utser=2*uiser=1.5181 mm
Total instantaneous slip ULS utuls=2*uiult=2.1633 mm
Psi 2 factor (variable action) psi2v=0.3
ufser=2*(uiser*Gk'/Fdser*(1+psi2p*kdef)+uiser*Qk'/Fdser*(1+psi2v
*kdef))=2.1102 mm
ufult=2*(uiult*Gk'/Fdser*(1+psi2p*kdef)+uiult*Qk'/Fdser*(1+psi2v
*kdef))=3.007 mm

DESIGN SUMMARY	**Design axial load**	**8.55 kN**
	Headside member thickness	**50 mm**
	Pointside member thickness	**50 mm**
	Number of nails required	**12**
	Diameter of nails	**4.2 mm**
	Length of smooth nails	**90 mm**

Nails should comply with BS EN 14592 and should have a minimum ultimate tensile strength of 600 N/mm². Pre-drilled holes are not required.
In order to eliminate the effect of number of nails in a row the minimum spacing of nails in a row parallel to grain needs to be 58.8 mm.

Location: Ex 10.13.1 Jack Porteous book p.417

Timber-to-timber joint without pre-drilled holes to EC5

Characteristic permanent load Gk=2.5 kN
Characteristic variable load Qk=3.5 kN

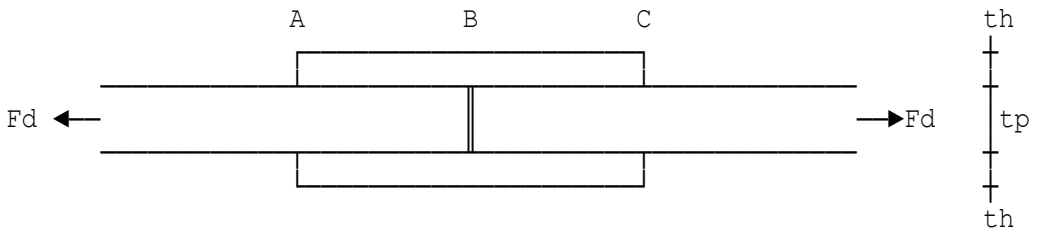

PLAN

Thickness of headside member th=36 mm
Timber strength class C22.
Timber characteristic density pk1=340 kg/m³
Timber strength class C22.
Thickness of pointside timber tp=50 mm
Timber characteristic density pk2=340 kg/m³
Diameter of nails d=3.35 mm
Length of nails l=65 mm
Basic loads will be derived from expressions given in Section 8
assuming round nails.
Equations a b c d e f
Min value of equations (a)-(f) Gmin=802.9
Char nail shear capacity basic=Gmin=802.9 N
Material factor for connections gamM=1.3
Design resistance per nail pnl=kmod*basic/gamM=494.09 N
Number of nails one side (A-B) n=INT(Fd/2*1000/pnl)+1=9
Number of nails both sides (A-B) Ntot=18

Minimum nail spacings - EC5 Table 8.2 & Figure 8.7

Minimum spacing of nails within
one row parallel to grain a1=(5+5*COS(alpha))*d=33.5 mm
Actual spacing of nails within
one row parallel to grain a1=33.5 mm
Spacing of rows of nails
perpendicular to grain a2=5*d=16.75 mm
End distance (loaded) a3t=(10+5*COS(alpha))*d=50.25 mm
End distance (unloaded) a3c=10*d=33.5 mm
Edge distance (loaded) a4t=(5+2*SIN(alpha))*d=16.75 mm
Edge distance (unloaded) a4c=(5+5*SIN(alpha))*d=16.75 mm

Joint slip check - EC5 Section 7

Total instantaneous slip SLS utser=2*uiser=2.4255 mm
Total instantaneous slip ULS utuls=2*uiult=3.4867 mm
Psi 2 factor (variable action) psi2v=0.3
ufser=2*(uiser*Gk'/Fdser*(1+psi2p*kdef)+uiser*Qk'/Fdser*(1+psi2v
*kdef))=3.5736 mm

```
ufult=2*(uiult*Gk'/Fdser*(1+psi2p*kdef)+uiult*Qk'/Fdser*(1+psi2v
      *kdef))=5.1371 mm
```

DESIGN SUMMARY	**Design axial load**	**8.625 kN**
	Headside member thickness	**36 mm**
	Pointside member thickness	**50 mm**
	Nail details between A-B:	
	Number of nails per side	**9**
	Total number of nails	**18**
	Nail details between B-C:	
	Number of nails per side	**9**
	Total number of nails	**18**
	Diameter of nails	**3.35 mm**
	Length of smooth nails	**65 mm**

Nails should comply with BS EN 14592 and should have a minimum ultimate tensile strength of 600 N/mm². Pre-drilled holes are not required.
In order to eliminate the effect of number of nails in a row the minimum spacing of nails in a row parallel to grain needs to be 46.9 mm.

Location: Screwed timber-to-timber joint connection

Timber to timber screwed joint - BS5268-2:2002

Axial load to be carried by joint	F=5.5 kN
Thickness of headside member	th=38 mm
Thickness of pointside timber	tp=76 mm
End grain modification factor	K43=0.7
Diameter of screw shank	d=4 mm
Length of screws	l=90 mm
Basic screw shear headside capacity	basich=361 N
Basic screw shear pointside capacity	basicp=361 N
Mod factor for duration of load	K52=1.12
Mod factor for number of screws	K54=0.9
Permissible screw load	psl=basic*K52*K53*K54=363.89 N
Number of screws required	n=INT(F*1000/psl)+1=16

Minimum screw spacings

End distance parallel to grain	40 mm
Edge dist perpendicular to grain	20 mm
Distance between lines of screws perpendicular to grain	12 mm
Distance between adjacent screws on a line, parallel to grain	40 mm

Joint slip check

Slip per shear plane	U=F*1000/Kser=4.8041 mm
Slip per fastener per shear plane	Uf=U/n=0.30025 mm

Location: Screwed metal plate-to-timber joint connection

Metal plate-to-timber screwed joint - BS5268-2:2002

Axial load to be carried by joint	F=4.8 kN
Thickness of headside steel plate	th=4 mm
Thickness of pointside timber	tp=38 mm
End grain modification factor	K43=1
Diameter of screw shank	d=4 mm
Length of screws	l=38 mm

Basic loads in kN will be derived from formula given in Annex G.2

Basic screw shear capacity	basic=1*Gmin/(Fd*Kd)=388.12 N

Basic screw shear capacity	basic=K46*basic=485.14 N
Mod factor for duration of load	K52=1.12
Mod factor for number of screws	K54=1
Permissible screw load	psl=basic*K52*K53*K54=380.35 N
Number of screws required	n=INT(F*1000/psl)+1=13

Minimum screw spacings

End distance parallel to grain	40 mm
Edge dist perpendicular to grain	20 mm
Distance between lines of screws perpendicular to grain	12 mm
Distance between adjacent screws on a line, parallel to grain	40 mm

Location: Screwed ply-to-timber joint

Ply plate to timber screwed joint - BS5268-2:2002

Axial load to be carried by joint	F=4.8 kN
Thickness of headside ply	th=9 mm

Plywood group 1 (Clause 38) comprising:
(a) American construction and industrial plywood
(b) Canadian Douglas fir plywood
(c) Canadian softwood plywood
(d) Swedish softwood plywood
(e) Finnish conifer plywood

Thickness of pointside timber	tp=63 mm
Diameter of screw shank	d=4 mm
Length of screws	l=63 mm
Basic screw shear capacity	basic=238 N
Mod factor for duration of load	K52=1.12
Mod factor for number of screws	K54=1
Permissible screw load	psl=basic*K52*K53*K54=266.56 N
Number of screws required	n=INT(F*1000/psl)+1=19

Minimum screw spacings

End distance parallel to grain	40 mm
Edge dist perpendicular to grain	20 mm
Distance between lines of screws perpendicular to grain	12 mm
Distance between adjacent screws on a line, parallel to grain	40 mm

Joint slip check

Slip per shear plane	U=F*1000/Kser=4.3971 mm
Slip per fastener per shear plane	Uf=U/n=0.23143 mm

Location: Screwed timber joint connection in withdrawal

Timber joint with screws in withdrawal - BS5268-2:2002

Axial load to be carried by joint	F=1.6 kN
Thickness of pointside timber	tp=48 mm
Diameter of screw shank	d=4 mm
Pointside embedment of screw	pen=48 mm
Basic withdrawal load (Table 67)	Wbasic=11.53 N/mm penetration
Mod factor for duration of load	K52=1.12
Mod factor for number of screws	K54=1
Permissible screw load	pnl=Wbasic*pen*K52*K53*K54=619.85 N
Number of screws required	n=INT(F*1000/pnl)+1=3

Minimum screw spacings

End distance parallel to grain	40 mm
Edge dist perpendicular to grain	20 mm
Distance between lines of screws perpendicular to grain	12 mm
Distance between adjacent screws on a line, parallel to grain	40 mm

Location: Screwed timber to timber joint

Metal plate-to-timber screwed joint - BS5268-2:2002

Axial load to be carried by joint	F=4.8 kN
Thickness of headside steel plate	th=4 mm
Thickness of pointside timber	tp=38 mm
End grain modification factor	K43=1
Diameter of screw shank	d=4 mm
Length of screws	l=36 mm

Basic loads in kN will be derived from formula given in Annex G.2
Equations G1 to G6 in annex G in BS5268-2:2002.

Basic screw shear capacity	basic=1*Gmin/(Fd*Kd)=388.12 N

Basic screw shear capacity	basic=K46*basic=485.14 N
Mod factor for duration of load	K52=1.12
Mod factor for number of screws	K54=1
Permissible screw load	psl=basic*K52*K53*K54=543.36 N
Number of screws required	n=INT(F*1000/psl)+1=9

Minimum screw spacings

End distance parallel to grain	40 mm
Edge dist perpendicular to grain	20 mm
Distance between lines of screws perpendicular to grain	12 mm
Distance between adjacent screws on a line, parallel to grain	40 mm

Joint slip check

Slip per shear plane	U=F*1000/Kser=2.2969 mm
Slip per fastener per shear plane	Uf=U/n=0.25521 mm

Location: Screwed metal plate-to-timber joint connection

Metal plate-to-timber screwed joint - BS5268-2:2002

Axial load to be carried by joint	F=4.8 kN
Thickness of headside steel plate	th=4 mm
Thickness of pointside timber	tp=38 mm
End grain modification factor	K43=1
Diameter of screw shank	d=4 mm
Length of screws	l=38 mm

Basic loads in kN will be derived from formula given in Annex G.2

Basic screw shear capacity	basic=1*Gmin/(Fd*Kd)=388.12 N

Basic screw shear capacity	basic=K46*basic=485.14 N
Mod factor for duration of load	K52=1.12
Mod factor for number of screws	K54=1
Permissible screw load	psl=basic*K52*K53*K54=543.36 N
Number of screws required	n=INT(F*1000/psl)+1=9

Minimum screw spacings

End distance parallel to grain	40 mm
Edge dist perpendicular to grain	20 mm
Distance between lines of screws perpendicular to grain	12 mm
Distance between adjacent screws on a line, parallel to grain	40 mm

Joint slip check

Slip per shear plane	U=F*1000/Kser=2.2969 mm
Slip per fastener per shear plane	Uf=U/n=0.25521 mm

Location: Screwed timber-to-timber joint connection

Timber-to-timber screwed joint to EC5

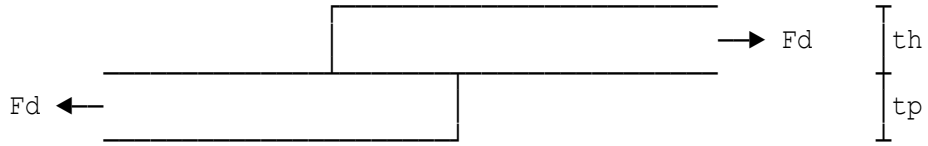

PLAN

```
Characteristic permanent load     Gk=2.75 kN
Characteristic variable load      Qk=2.75 kN
Design axial load at joint        Fd=1.35*Gk+1.5*Qk=7.8375 kN
Timber strength class C22.
Thickness of headside member      th=38 mm
Timber strength class C22.
Thickness of pointside timber     tp=76 mm
Diameter of screw shank           d=4 mm
Length of screws                  l=90 mm
Basic loads in N will be derived from expressions given in Section 8
assuming smooth shank screws.
Equations  a        b        c         d         e         f
Min value of equations (a)-(f)    Gmin=1134.7
Charact screw shear capacity      basic=Gmin=1134.7 N
Material factor for connections   gamM=1.3
Design resistance per screw       pnl=kmod*basic/gamM=698.3 N
Number of screws required         n=INT(Fd*1000/pnl)+1=12
```

Minimum screw spacings - EC5 Table 8.2

```
Minimum spacing of screws within
one row parallel to grain         a1=(5+5*COS(alpha))*d=40 mm
Actual spacing of screws within
one row parallel to grain         a1=40 mm
Spacing of rows of screws
perpendicular to grain            a2=5*d=20 mm
End distance (loaded)             a3t=(10+5*COS(alpha))*d=60 mm
End distance (unloaded)           a3c=10*d=40 mm
Edge distance (loaded)            a4t=(5+2*SIN(alpha))*d=20 mm
Edge distance (unloaded)          a4c=(5+5*SIN(alpha))*d=20 mm
```

Joint slip check - EC5 Section 7

```
Total instantaneous slip SLS      utser=2*uiser=1.447 mm
Total instantaneous slip ULS      utuls=2*uiult=2.062 mm
Psi 2 factor (variable action)    psi2v=0.3
ufser=2*(uiser*Gk'/Fdser*(1+psi2p*kdef)+uiser*Qk'/Fdser*(1+psi2v
      *kdef))=2.0113 mm
ufult=2*(uiult*Gk'/Fdser*(1+psi2p*kdef)+uiult*Qk'/Fdser*(1+psi2v
      *kdef))=2.8661 mm
```

DESIGN SUMMARY	**Design axial load**	**7.8375 kN**
	Headside member thickness	**38 mm**
	Pointside member thickness	**76 mm**
	Number of screws required	**12**
	Diameter of screws	**4 mm**
	Length of screws	**90 mm**

Provide smooth shank screws to EN 14592 of min ultimate tensile strength of 540 N/mm². Pre-drilled holes are not required. In order to eliminate the effect of number of screws in a row the min spacing of screws in a row parallel to grain needs to be 56 mm.

Location: Screwed metal plate-to-timber joint connection

Metal plate-to-timber screwed joint to EC5

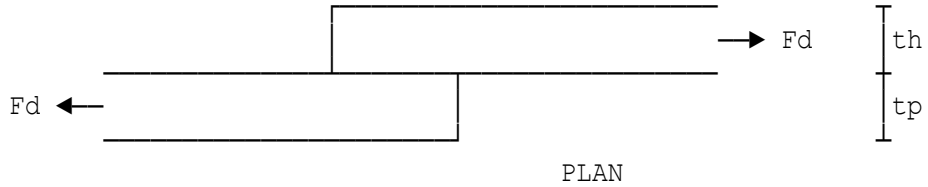

Characteristic permanent load Gk=2.4 kN
Characteristic variable load Qk=2.4 kN
Design axial load at joint Fd=1.35*Gk+1.5*Qk=6.84 kN
Thickness of headside steel plate th=4 mm
Timber strength class C22.
Thickness of pointside timber tp=38 mm
Diameter of screw shank d=4 mm
Length of screws l=38 mm
Basic loads in N will be derived from expressions given in Section 8 assuming smooth shank screws.
Min value of equations (a)-(e) Gmin=1301.5

Char screw shear capacity basic=Gmin=1301.5 N
Material factor for connections gamM=1.3
Design resistance per screw pnl=kmod*basic/gamM=650.73 N
Number of screws required n=INT(Fd*1000/pnl)+1=11

Minimum screw spacings - EC5 Table 8.2

Minimum spacing of screws within one row parallel to grain a1=(5+5*COS(alpha))*d=40 mm
Actual spacing of screws within one row parallel to grain a1=40 mm
Spacing of rows of screws perpendicular to grain a2=5*d=20 mm
End distance (loaded) a3t=(10+5*COS(alpha))*d=60 mm
End distance (unloaded) a3c=10*d=40 mm
Edge distance (loaded) a4t=(5+2*SIN(alpha))*d=20 mm
Edge distance (unloaded) a4c=(5+5*SIN(alpha))*d=20 mm

Joint slip check - EC5 Section 7

Total instantaneous slip SLS utser=2*uiser=0.68882 mm
Total instantaneous slip ULS utuls=2*uiult=0.98156 mm
Psi 2 factor (variable action) psi2v=0.3
ufser=2*(uiser*Gk'/Fdser*(1+psi2p*kdef)+uiser*Qk'/Fdser*(1+psi2v *kdef))=1.5843 mm
ufult=2*(uiult*Gk'/Fdser*(1+psi2p*kdef)+uiult*Qk'/Fdser*(1+psi2v *kdef))=2.2576 mm

DESIGN SUMMARY	**Design axial load**	**6.84 kN**
	Headside member thickness	**4 mm**
	Pointside member thickness	**38 mm**
	Number of screws required	**11**
	Diameter of screws	**4 mm**
	Length of screws	**38 mm**

Provide smooth shank screws to EN 14592 of min ultimate tensile strength of 540 N/mm². Pre-drilled holes are not required. In order to eliminate the effect of number of screws in a row the min spacing of screws in a row parallel to grain needs to be 56 mm.

Location: Screwed ply-to-timber joint

Ply plate-to-timber screwed joint to EC5

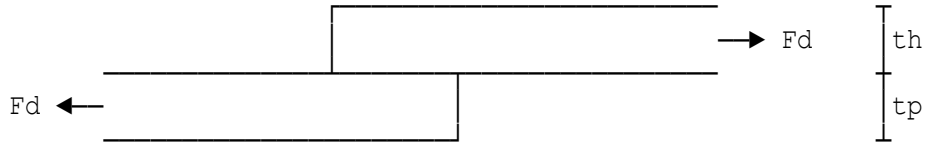

PLAN

Characteristic permanent load Gk=2.4 kN
Characteristic variable load Qk=2.4 kN
Design axial load at joint Fd=1.35*Gk+1.5*Qk=6.84 kN
Plywood group 1 comprising:
(a) American construction and industrial plywood
(b) Canadian Douglas fir plywood
(c) Canadian softwood plywood
(d) Swedish softwood plywood
(e) Finnish conifer plywood
Thickness of headside member th=9 mm
Timber strength class C16.
Thickness of pointside timber tp=63 mm
Diameter of screw shank d=4 mm
Length of screws l=63 mm
Basic loads in N will be derived from expressions given in Section 8 assuming smooth shank screws.
Equations a b c d e f
Min value of equations (a)-(f) Gmin=846.75

Char screw shear capacity basic=Gmin=846.75 N
Material factor for connections gamM=1.3
Design resistance per screw pnl=kmod*basic/gamM=521.08 N
Number of screws required n=INT(Fd*1000/pnl)+1=14

Minimum screw spacings - EC5 Table 8.2

Minimum spacing of screws within
one row parallel to grain a1=(5+5*COS(alpha))*d=40 mm
Actual spacing of screws within
one row parallel to grain a1=40 mm
Spacing of rows of screws
perpendicular to grain a2=5*d=20 mm
End distance (loaded) a3t=(10+5*COS(alpha))*d=60 mm
End distance (unloaded) a3c=10*d=40 mm
Edge distance (loaded) a4t=(5+2*SIN(alpha))*d=20 mm
Edge distance (unloaded) a4c=(5+5*SIN(alpha))*d=20 mm

Joint slip check - EC5 Section 7

Total instantaneous slip SLS utser=2*uiser=1.2433 mm
Total instantaneous slip ULS utuls=2*uiult=1.7717 mm

```
Psi 2 factor (variable action)    psi2v=0.3
ufser=2*(uiser*Gk'/Fdser*(1+psi2p*kdef)+uiser*Qk'/Fdser*(1+psi2v
      *kdef))=1.8898 mm
ufult=2*(uiult*Gk'/Fdser*(1+psi2p*kdef)+uiult*Qk'/Fdser*(1+psi2v
      *kdef))=2.693 mm
```

DESIGN SUMMARY	**Design axial load**	**6.84 kN**
	Headside member thickness	**9 mm**
	Pointside member thickness	**63 mm**
	Number of screws required	**14**
	Diameter of screws	**4 mm**
	Length of screws	**63 mm**

Provide smooth shank screws to EN 14592 of min ultimate tensile strength of 540 N/mm². Pre-drilled holes are not required. In order to eliminate the effect of number of screws in a row the min spacing of screws in a row parallel to grain needs to be 56 mm.

Location: Screwed timber joint connection in withdrawal

Timber joint with screws in withdrawal to EC5

Characteristic permanent load	Gk=0.8 kN
Characteristic variable load	Qk=0.8 kN
Design axial load at joint	Fd=1.35*Gk+1.5*Qk=2.28 kN
Thickness of headside member	th=25 mm

Bending parallel to the grain	fmk=22 N/mm²
Compress parallel to the grain	fc0k=20 N/mm²
Compress perp to the grain	fc90k=2.4 N/mm²
Tension parallel to the grain	ft0k=13 N/mm²
Shear parallel to the grain	fvk=3.8 N/mm²
Mean modulus of elasticity	E0mean=10000 N/mm²
5th percentile MOE	E005=6700 N/mm²
Characteristic density timber 2	pk2=340 kg/m³
Thickness of pointside timber	tp=48 mm
Diameter of screw shank	d=4 mm
Pointside embedment of screw	pen=48 mm
Screw head diameter	dh=8 mm

Material factor for connections	gamM=1.3
Screw design withdrawal capacity	FaxRd=4*kmod*FaxRk/gamM=1092.7 N
Number of screws required	n=INT(Fd*1000/FaxRd)+1=3

The design withdrawal capacity of the connection taking into account the effective number of screws as per EC5, Clause 8.7.2(8) is given by the following expression:

Spacing in a plane // grain	a1=28 mm
Perpendicular to the grain	a2=20 mm
End distance as per Fig 8.11a	a1cg=40 mm
Edge distance as per Fig 8.11a	a2cg=16 mm

DESIGN SUMMARY	**Design axial load**	**2.28 kN**
	Headside member thickness	**25 mm**
	Pointside member thickness	**48 mm**
	Number of screws required	**3**
	Diameter of screws	**4 mm**
	Length of screws	**73 mm**

Provide smooth shank screws to EN 14592 of min ultimate tensile strength of 540 N/mm². Pre-drilled holes are not required.

Location: Screwed timber to timber joint

Metal plate-to-timber screwed joint to EC5

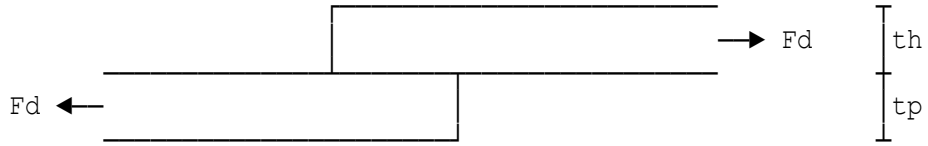

PLAN

Characteristic permanent load Gk=2.4 kN
Characteristic variable load Qk=2.4 kN
Design axial load at joint Fd=1.35*Gk+1.5*Qk=6.84 kN
Thickness of headside steel plate th=4 mm
Timber strength class C22.
Thickness of pointside timber tp=38 mm
Diameter of screw shank d=4 mm
Length of screws l=36 mm
Basic loads in N will be derived from expressions given in Section 8 assuming smooth shank screws.
Expressions (a) to (e) for fasteners in single shear refer to section 8.2.3 in EC5. Zero contribution from rope effect will be considered.
Min value of equations (a)-(e) Gmin=1255.8

Char screw shear capacity basic=Gmin=1255.8 N
Material factor for connections gamM=1.3
Design resistance per screw pnl=kmod*basic/gamM=772.81 N
Number of screws required n=INT(Fd*1000/pnl)+1=9

Minimum screw spacings - EC5 Table 8.2

Minimum spacing of screws within
one row parallel to grain a1=(5+5*COS(alpha))*d=40 mm
Actual spacing of screws within
one row parallel to grain a1=40 mm
Spacing of rows of screws
perpendicular to grain a2=5*d=20 mm
End distance (loaded) a3t=(10+5*COS(alpha))*d=60 mm
End distance (unloaded) a3c=10*d=40 mm
Edge distance (loaded) a4t=(5+2*SIN(alpha))*d=20 mm
Edge distance (unloaded) a4c=(5+5*SIN(alpha))*d=20 mm

Joint slip check - EC5 Section 7

Total instantaneous slip SLS utser=2*uiser=0.84189 mm
Total instantaneous slip ULS utuls=2*uiult=1.1997 mm
Psi 2 factor (variable action) psi2v=0.3
ufser=2*(uiser*Gk'/Fdser*(1+psi2p*kdef)+uiser*Qk'/Fdser*(1+psi2v
*kdef))=1.1702 mm
ufult=2*(uiult*Gk'/Fdser*(1+psi2p*kdef)+uiult*Qk'/Fdser*(1+psi2v
*kdef))=1.6676 mm

DESIGN SUMMARY	**Design axial load**	**6.84 kN**
	Headside member thickness	**4 mm**
	Pointside member thickness	**38 mm**
	Number of screws required	**9**
	Diameter of screws	**4 mm**
	Length of screws	**36 mm**

Provide smooth shank screws to EN 14592 of min ultimate tensile strength of 540 N/mm². Pre-drilled holes are not required. In order to eliminate the effect of number of screws in a row the min spacing of screws in a row parallel to grain needs to be 56 mm.

Location: Screwed metal plate-to-timber joint connection

Metal plate-to-timber screwed joint to EC5

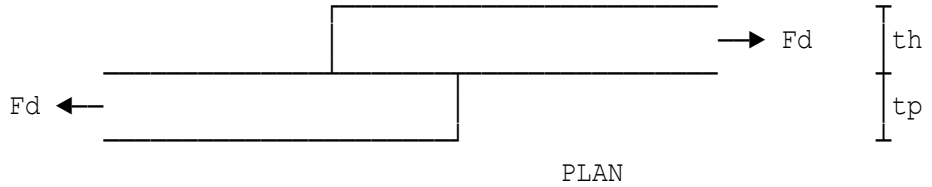

Characteristic permanent load Gk=2.4 kN
Characteristic variable load Qk=2.4 kN
Design axial load at joint Fd=1.35*Gk+1.5*Qk=6.84 kN
Thickness of headside steel plate th=4 mm
Timber strength class C22.
Thickness of pointside timber tp=38 mm
Diameter of screw shank d=4 mm
Length of screws l=38 mm
Basic loads in N will be derived from expressions given in Section 8 assuming smooth shank screws.
Min value of equations (a)-(e) Gmin=1301.5

Char screw shear capacity basic=Gmin=1301.5 N
Material factor for connections gamM=1.3
Design resistance per screw pnl=kmod*basic/gamM=800.89 N
Number of screws required n=INT(Fd*1000/pnl)+1=9

Minimum screw spacings - EC5 Table 8.2

Minimum spacing of screws within one row parallel to grain a1=(5+5*COS(alpha))*d=40 mm
Actual spacing of screws within one row parallel to grain a1=40 mm
Spacing of rows of screws perpendicular to grain a2=5*d=20 mm
End distance (loaded) a3t=(10+5*COS(alpha))*d=60 mm
End distance (unloaded) a3c=10*d=40 mm
Edge distance (loaded) a4t=(5+2*SIN(alpha))*d=20 mm
Edge distance (unloaded) a4c=(5+5*SIN(alpha))*d=20 mm

Joint slip check - EC5 Section 7

Total instantaneous slip SLS utser=2*uiser=0.84189 mm
Total instantaneous slip ULS utuls=2*uiult=1.1997 mm
Psi 2 factor (variable action) psi2v=0.3
ufser=2*(uiser*Gk'/Fdser*(1+psi2p*kdef)+uiser*Qk'/Fdser*(1+psi2v *kdef))=1.1702 mm
ufult=2*(uiult*Gk'/Fdser*(1+psi2p*kdef)+uiult*Qk'/Fdser*(1+psi2v *kdef))=1.6676 mm

DESIGN SUMMARY	**Design axial load**	**6.84 kN**
	Headside member thickness	**4 mm**
	Pointside member thickness	**38 mm**
	Number of screws required	**9**
	Diameter of screws	**4 mm**
	Length of screws	**38 mm**

Provide smooth shank screws to EN 14592 of min ultimate tensile strength of 540 N/mm². Pre-drilled holes are not required. In order to eliminate the effect of number of screws in a row the min spacing of screws in a row parallel to grain needs to be 56 mm.

Location: Bolt design

Axial load to be carried by joint F=4.55 kN

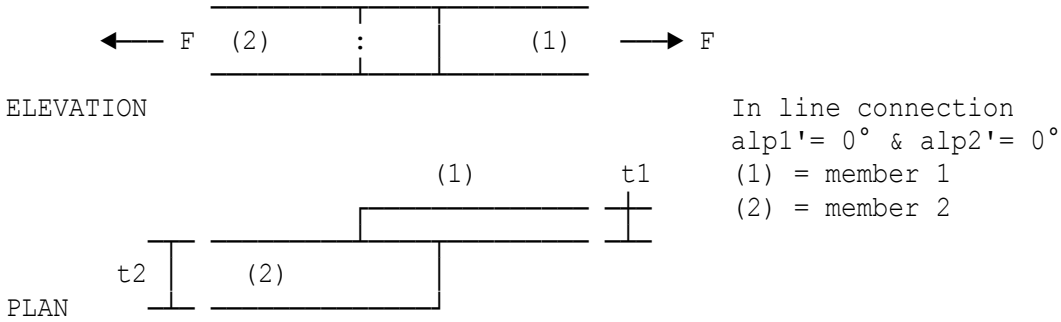

Thickness of thinner member t1=47 mm
Strength class C24 to Table 8.
Thickness of other member t2=47 mm
Strength class C24 to Table 8.
Joint to be connected by bolts K2b=1.33
Fixing diameter (8 to 36 mm) bd=16 mm
Basic loads in kN will be derived from formula given in Annex G.3
Load duration for bolt/dowel connection = Medium term.
Fixing spacing parallel to the grain alphapar=64 mm

Basic bolt shear capacity basic=1*Gmin/(Fd*Kd)=3.2882 kN
Mod factor for moisture content K56=1
Mod factor for number of bolts K57=1

Permissible bolt load pbl=basic*K56*K57=3.2882 kN
Number of bolts required n=INT(F/pbl)+1=2

Minimum bolt/dowel spacing

The fixing spacing in the direction of load should be not less than 64 mm. For loading parallel to the grain, the spacing across the grain between fixings or rows of fixings should be not less than 64 mm.

For loading perpendicular to the grain, the spacing parallel to the grain between fixings or rows of fixings should be not less than 79 mm.

When two timber members are fixed together at right-angles to each other, the minimum bolt/dowel spacing should be 80 mm.

The distance from the end of the timber to the centre of the nearest bolt/dowel hole for parallel to the grain loading should be not less than 64 mm where the bolts/dowels are bearing away from the end of the member, or 112 mm where bolts/dowels are bearing towards the end of the member.

The distance from the edge of the timber to the centre of the nearest bolt/dowel hole should be not less than 24 mm except when loading is perpendicular to the grain and then the distance from the edge of the timber towards which the fixings are bearing and the centre of the nearest fixing hole, should be not less than 64 mm.

DESIGN SUMMARY	**Axial load to be carried by joint**	**4.55 kN**
	Permissible load on each bolt	**3.2882 kN**
	Number of bolts required per joint	**2**
	Load capacity of the joint	**6.5765 kN**

Location: Default case 2

Axial load to be carried by joint F=6.5 kN

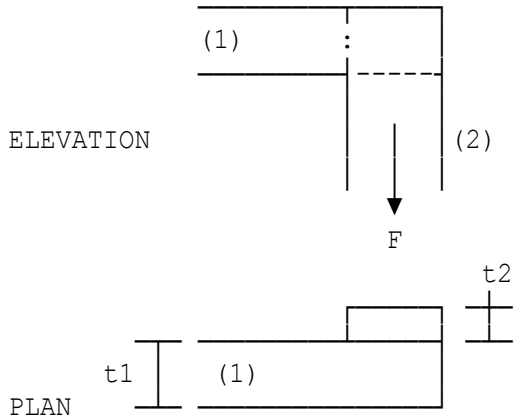

Members with grain at
90° to one another
alp1'=90° (member 1)
alp2'=0° (member 2)

(1) = member 1
(2) = member 2

Thickness of member 1	t1=35 mm
Default case with scr=0	
Characteristic density timber 1	pk1=310 kg/m³
Angle between grain and load	alp1'=90 degrees
Thickness of member 2	t2=35 mm
Default case with scr=0	
Characteristic density timber 2	pk2=310 kg/m³
Angle between grain and load	alp2'=0 degrees
Joint to be connected by bolts	K2b=1.33
Fixing diameter (8 to 36 mm)	bd=12 mm

Basic loads in kN will be derived from formula given in Annex G.3
Load duration for bolt/dowel connection = Medium term.
Fixing spacing parallel to the grain alphapar=48 mm

Basic bolt shear capacity	basic=1*Gmin/(Fd*Kd)=1.5875 kN
Mod factor for moisture content	K56=1
Mod factor for number of bolts	K57=1
Permissible bolt load	pbl=basic*K56*K57=1.5875 kN
Number of bolts required	n=INT(F/pbl)+1=5

DESIGN	**Axial load to be carried by joint**	**6.5 kN**
SUMMARY	**Permissible load on each bolt**	**1.5875 kN**
	Number of bolts required per joint	**5**
	Load capacity of the joint	**7.9376 kN**

Location: Default case 3

Axial load to be carried by joint F=8.5 kN

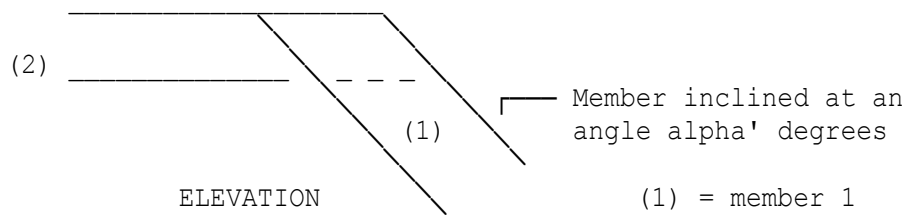

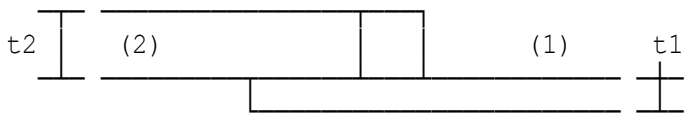

PLAN

Thickness of member 1	t1=72 mm
Strength class C16 to Table 8.	
Timber characteristic density	pk1=310 kg/m³
Angle between grain and load	alp1'=0°
Thickness of member 2	t2=72 mm
Strength class C16 to Table 8.	
Timber characteristic density	pk2=310 kg/m³
Angle between grain and load	alp2'=45°
Joint to be connected by bolts	K2b=1.33
Fixing diameter (8 to 36 mm)	bd=16 mm

Basic loads in kN will be derived from formula given in Annex G.3
Load duration for bolt/dowel connection = Short term.
Fixing spacing parallel to the grain alphapar=64 mm

Basic bolt shear capacity	basic=1*Gmin/(Fd*Kd)=3.9774 kN
Mod factor for moisture content	K56=1
Mod factor for number of bolts	K57=1
Permissible bolt load	pbl=basic*K56*K57=3.9774 kN
Number of bolts required	n=INT(F/pbl)+1=3

DESIGN SUMMARY	**Axial load to be carried by joint**	**8.5 kN**
	Permissible load on each bolt	**3.9774 kN**
	Number of bolts required per joint	**3**
	Load capacity of the joint	**11.932 kN**

Location: Default case 4

Axial load to be carried by joint F=8.5 kN

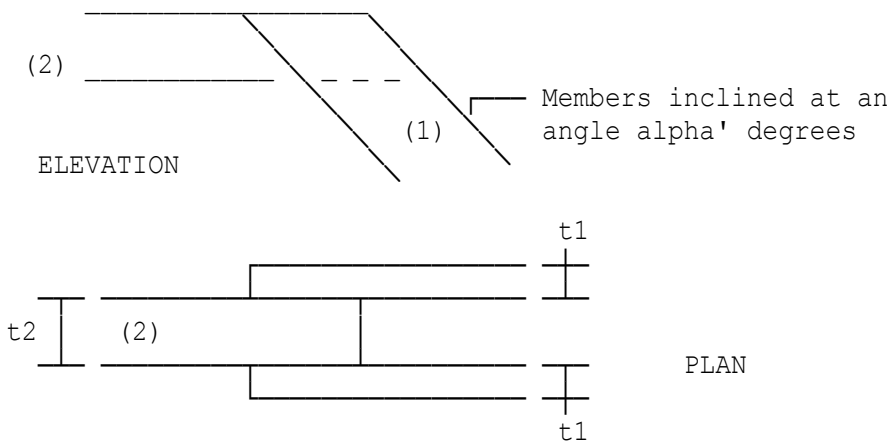

Thickness of member 1 t1=36 mm
Strength class C30 to Table 8.
Timber characteristic density pk1=380 kg/m³
Angle between grain and load alp1'=0°
Thickness of member 2 t2=72 mm
Strength class C30 to Table 8.
Timber characteristic density pk2=380 kg/m³
Angle between grain and load alp2'=45°
Joint to be connected by bolts K2b=1.33
Fixing diameter (8 to 36 mm) bd=16 mm
Basic loads in kN will be derived from formula given in Annex G.3
Constant Kd=1
Load duration for bolt/dowel connection = Short term.
Fixing spacing parallel to the grain alphapar=64 mm

Equations	G7	G8	G9	G10
	7922.1	6541.8	6933.4	9731.9

Min value of equations G7 to G10 Gmin=6541.8

Basic bolt shear capacity basic=1*Gmin/(Fd*Kd)=4.6727 kN
Mod factor for moisture content K56=1
Mod factor for number of bolts K57=1

Permissible bolt load pbl=basic*K56*K57=4.6727 kN
Number of bolts required n=INT(F/pbl)+1=2

DESIGN SUMMARY	**Axial load to be carried by joint**	**8.5 kN**
	Permissible load on each bolt	**4.6727 kN**
	Number of bolts required per joint	**2**
	Load capacity of the joint	**9.3454 kN**

Location: Default case 5

Axial load to be carried by joint F=8.5 kN

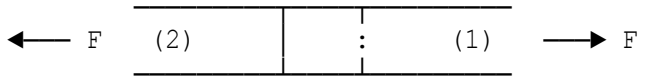

ELEVATION

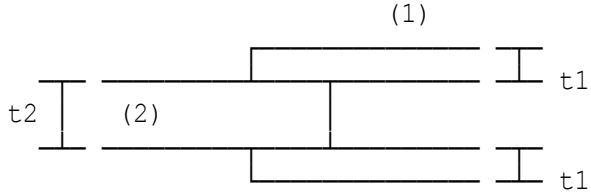

PLAN

In line connection
alp1'=0° & alp2'=0°

(1) = member 1
(2) = member 2

Thickness of outer members t1=48.5 mm
Strength class C16 to Table 8.
Timber characteristic density pk1=310 kg/m³
Angle between grain and load alp1'=0 degrees
Thickness of other member t2=97 mm
Strength class C16 to Table 8.
Timber characteristic density pk2=310 kg/m³
Angle between grain and load alp2'=0 degrees
Joint to be connected by bolts K2b=1.33
Fixing diameter (8 to 36 mm) bd=20 mm
Basic loads in kN will be derived from formula given in Annex G.3
Constant Kd=1
Load duration for bolt/dowel connection = Long term.
Fixing spacing parallel to the grain alphapar=80 mm

Equations	G7	G8	G9	G10
	6910.2	6910.2	8140.9	11507

Min value of equations G7 to G10 Gmin=6910.2

Basic bolt shear capacity basic=1*Gmin/(Fd*Kd)=5.1186 kN
Mod factor for moisture content K56=1
Mod factor for number of bolts K57=1

Permissible bolt load pbl=basic*K56*K57=5.1186 kN
Number of bolts required n=INT(F/pbl)+1=2

DESIGN SUMMARY	**Axial load to be carried by joint**	**8.5 kN**
	Permissible load on each bolt	**5.1186 kN**
	Number of bolts required per joint	**2**
	Load capacity of the joint	**10.237 kN**

Location: Default case 6

Axial load to be carried by joint F=4.55 kN

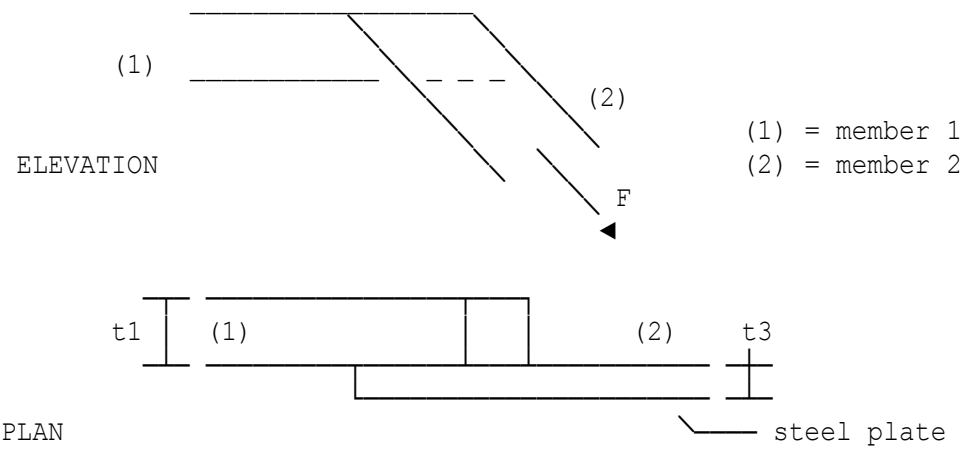

Thickness of timber member t1=47 mm
Strength class C24 to Table 8.
Timber characteristic density pk1=350 kg/m³
Angle between grain and load alp1'=45°
Thickness of steel plate t3=15 mm
Load is inclined at an angle to the grain of the timber thus:
Modification factor K46=1.0
Joint to be connected by bolts K2b=1.33
Fixing diameter (8 to 36 mm) bd=12 mm

Bolt shear capacities

Basic loads in kN will be derived from formula given in Annex G.3
Load duration for bolt/dowel connection = Medium term.
Fixing spacing parallel to the grain alphapar=48 mm
Embedded strength for timber 1
Embedding strength fhod=0.050*(1-0.01*bd)*pk1*Ka=12.449
Embedding strength (Timb 1) fhd1=fhod/((K90*SIN(alp1)^2)
+COS(alp1)^2)=9.8409
beta=1

Basic bolt shear capacity basic=1*Gmin/(Fd*Kd)=2.184 kN
Mod factor for moisture content K56=1
Mod factor for number of bolts K57=1

Permissible bolt load pbl=basic*K46*K56*K57=2.184 kN
Number of bolts required n=INT(F/pbl)+1=3

Minimum bolt/dowel spacing

The fixing spacing in the direction of load should be not less than 48 mm. For loading parallel to the grain, the spacing across the grain between fixings or rows of fixings should be not less than 48 mm.

For loading perpendicular to the grain, the spacing parallel to the grain between fixings or rows of fixings should be not less than 60 mm.

When two timber members are fixed together at right-angles to each other, the minimum bolt/dowel spacing should be 60 mm.

The distance from the end of the timber to the centre of the nearest bolt/dowel hole for parallel to the grain loading should be not less than 48 mm where the bolts/dowels are bearing away from the end of the member, or 84 mm where bolts/dowels are bearing towards the end of the member.

The distance from the edge of the timber to the centre of the nearest bolt/dowel hole should be not less than 18 mm except when loading is perpendicular to the grain and then the distance from the edge of the timber towards which the fixings are bearing and the centre of the nearest fixing hole, should be not less than 48 mm.

DESIGN	**Axial load to be carried by joint**	**4.55 kN**
SUMMARY	**Permissible load on each bolt**	**2.184 kN**
	Number of bolts required per joint	**3**
	Load capacity of the joint	**6.5521 kN**

Location: Default case 7

Axial load to be carried by joint F=9.7 kN

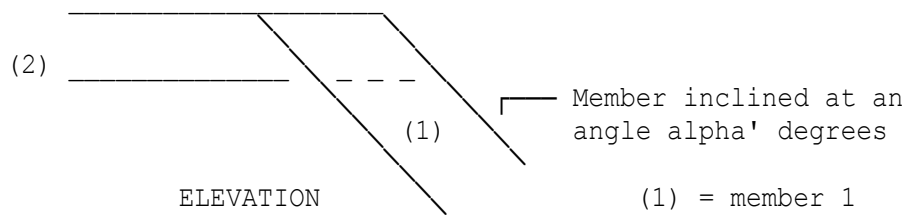

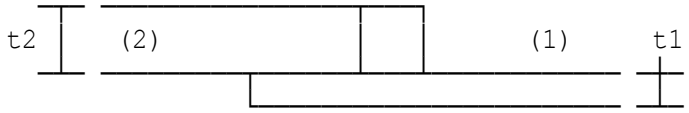

PLAN

Thickness of member 1	t1=97 mm
Strength class C24 to Table 8.	
Timber characteristic density	pk1=350 kg/m³
Angle between grain and load	alp1'=0°
Thickness of member 2	t2=72 mm
Strength class C24 to Table 8.	
Timber characteristic density	pk2=350 kg/m³
Angle between grain and load	alp2'=42°
Joint to be connected by bolts	K2b=1.33
Fixing diameter (8 to 36 mm)	bd=20 mm

Basic loads in kN will be derived from formula given in Annex G.3
Load duration for bolt/dowel connection = Medium term.
Fixing spacing parallel to the grain alphapar=140 mm
Equations G1 to G6 in annex G in BS5268-2:2002.

Basic bolt shear capacity	basic=1*Gmin/(Fd*Kd)=6.6875 kN
Mod factor for moisture content	K56=1
Mod factor for number of bolts	K57=1
Permissible bolt load	pbl=basic*K56*K57=6.6875 kN
Number of bolts required	n=INT(F/pbl)+1=2

DESIGN SUMMARY	**Axial load to be carried by joint**	**9.7 kN**
	Permissible load on each bolt	**6.6875 kN**
	Number of bolts required per joint	**2**
	Load capacity of the joint	**13.375 kN**

Location: Bolt design

Joint comprising 2 members (fasteners in single shear)

Design axial load at joint Fd'=5.8 kN

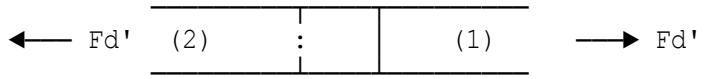

ELEVATION

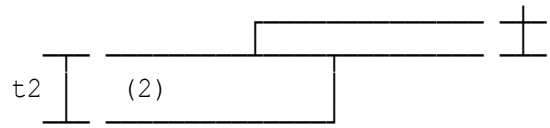

PLAN

In line connection
alp1'= 0° & alp2'=0°
(1) = member 1
(2) = member 2

Thickness of thinner member t1=47 mm
Timber strength class C24.
Thickness of other member t2=47 mm
Timber strength class C24.
Bolt/dowel diameter (8 to 30 mm) bd=16 mm
Basic loads are in kN and will be derived from EC5 Section 8.
Charact fastener yield moment MyRk=0.3*400*bd^2.6=162141 Nmm
Charact.embedment strength fhok1=0.082*(1-0.01*bd)*pk1
=24.108 N/mm²
Denominator (expression 8.31) denom1=((K90*SIN(alp1)^2)
+COS(alp1)^2)=1
Embedment strength (Timber 1) fh1k=fhok1/denom1=24.108 N/mm²
Charact.embedment strength fhok2=0.082*(1-0.01*bd)*pk1
=24.108 N/mm²
Denominator (expression 8.31) denom2=((K90*SIN(alp2)^2)
+COS(alp2)^2)=1
Embedment strength (Timber 2) fh2k=fhok2/denom2=24.108 N/mm²
Factor beta=fh2k/fh1k=1
Equations a b c d e f
Min value of equations (a)-(f) Gmin=7509.4
Char fastener shear resistance basic=Gmin/1000=7.5094 kN

Design resistance per fastener pbl=kmod*basic/gamM=4.0435 kN
Number of fasteners required n=INT(Fd'/pbl)+1=2
Total No of fasteners at joint n=2
Number of fasteners per row nfpr=2
Lines of fasteners to be adopted rpl=1
Spacing between fasteners a1=80 mm
Effect No of fasteners per row nef=nfpr^0.9*(a1/(13*bd))^0.25=1.4695
Effective joint design capacity Fvef=rpl*nef*pbl=5.9421 kN

Minimum bolt spacings

Angle alpha alpha=0 radians
Spacing parallel to grain a1=(4+COS(alpha))*bd=80 mm
Spacing perpendicular to grain a2=4*bd=64 mm
End distance (loaded end) a3t=7*bd=112 mm

End distance (unloaded end)	a3c=4*bd=64 mm
Edge distance (loaded edge)	a4t=3*bd=48 mm
Edge distance (unloaded edge)	a4c=3*bd=48 mm

DESIGN	**Design axial load at joint**	**5.8 kN**
SUMMARY	**Number of fasteners per joint**	**2**
	Effective joint design capacity	**5.9421 kN**

Location: Default case 2

Joint comprising 2 members (fasteners in single shear)

Design axial load at joint Fd'=9.1 kN

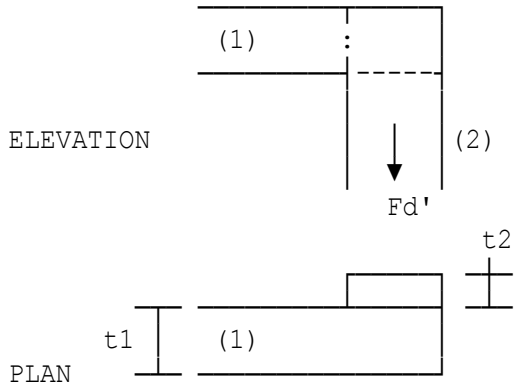

Members with grain at 90° to one another
alp1'=90° (member 1)
alp2'=0° (member 2)

(1) = member 1
(2) = member 2

Thickness of member 1 t1=35 mm

Default case with scr=0
Bending parallel to the grain fmk=22 N/mm²
Compress parallel to the grain fc0k=20 N/mm²
Compress perp to the grain fc90k=2.4 N/mm²
Tension parallel to the grain ft0k=13 N/mm²
Shear parallel to the grain fvk=2.4 N/mm²
Mean modulus of elasticity E0mean=10000 N/mm²
5th percentile MOE E005=6700 N/mm²
Characteristic density timber 1 pk1=310 kg/m³
Angle between grain and load alp1'=90 degrees
Thickness of member 2 t2=35 mm

Default case with scr=0
Bending parallel to the grain fmk=22 N/mm²
Compress parallel to the grain fc0k=20 N/mm²
Compress perp to the grain fc90k=2.4 N/mm²
Tension parallel to the grain ft0k=13 N/mm²
Shear parallel to the grain fvk=2.4 N/mm²
Mean modulus of elasticity E0mean=10000 N/mm²
5th percentile MOE E005=6700 N/mm²
Characteristic density timber 2 pk2=310 kg/m³
Angle between grain and load alp2'=0 degrees
Bolt/dowel diameter (8 to 30 mm) bd=12 mm
Basic loads are in kN and will be derived from EC5 Section 8.
Charact fastener yield moment MyRk=0.3*400*bd^2.6=76745 Nmm
Charact.embedment strength fhok1=0.082*(1-0.01*bd)*pk1
=22.37 N/mm²
Denominator (expression 8.31) denom1=((K90*SIN(alp1)^2)
+COS(alp1)^2)=1.53
Embedment strength (Timber 1) fh1k=fhok1/denom1=14.621 N/mm²
Charact.embedment strength fhok2=0.082*(1-0.01*bd)*pk1
=22.37 N/mm²
Denominator (expression 8.31) denom2=((K90*SIN(alp2)^2)
+COS(alp2)^2)=1

Embedment strength (Timber 2)	fh2k=fhok2/denom2=22.37 N/mm²
Factor	beta=fh2k/fh1k=1.53
Equations a b c d e f	
Min value of equations (a)-(f)	Gmin=3196.2
Char fastener shear resistance	basic=Gmin/1000=3.1962 kN
Design resistance per fastener	pbl=kmod*basic/gamM=1.4752 kN
Number of fasteners required	n=INT(Fd'/pbl)+1=7
Total No of fasteners at joint	n=7
Shear force on LHS of joint	FvEd1=4.55 kN
Shear force on RHS of joint	FvEd2=4.55 kN
Height of member (2)	h=225 mm
Loaded edge distance	he=175 mm

DESIGN	**Design axial load at joint**	**9.1 kN**
SUMMARY	**Number of fasteners per joint**	**7**
	Design joint resistance	**10.326 kN**

Location: Default case 3

Joint comprising 2 members (fasteners in single shear)

Design axial load at joint Fd'=11.9 kN

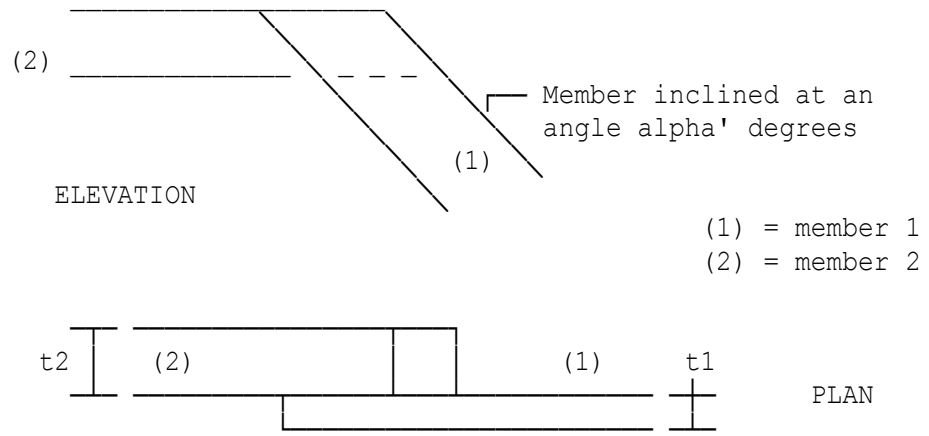

Thickness of member 1	t1=72 mm
Timber strength class C16.	
Timber characteristic density	pk1=310 kg/m³
Angle between grain and load	alp1'=0°
Thickness of member 2	t2=72 mm
Timber strength class C16.	
Timber characteristic density	pk2=310 kg/m³
Angle between grain and load	alp2'=45°
Bolt/dowel diameter (8 to 30 mm)	bd=16 mm
Basic loads are in kN and will be	derived from EC5 Section 8.
Charact fastener yield moment	MyRk=0.3*400*bd^2.6=162141 Nmm
Charact.embedment strength	fhok1=0.082*(1-0.01*bd)*pk1 =21.353 N/mm²
Denominator (expression 8.31)	denom1=((K90*SIN(alp1)^2) +COS(alp1)^2)=1
Embedment strength (Timber 1)	fh1k=fhok1/denom1=21.353 N/mm²
Charact.embedment strength	fhok2=0.082*(1-0.01*bd)*pk1 =21.353 N/mm²
Denominator (expression 8.31)	denom2=((K90*SIN(alp2)^2) +COS(alp2)^2)=1.295
Embedment strength (Timber 2)	fh2k=fhok2/denom2=16.489 N/mm²
Factor	beta=fh2k/fh1k=0.7722
Equations a b c	d e f
Min value of equations (a)-(f)	Gmin=9006.4
Char fastener shear resistance	basic=Gmin/1000=9.0064 kN
Design resistance per fastener	pbl=kmod*basic/gamM=4.8496 kN
Number of fasteners required	n=INT(Fd'/pbl)+1=3
Total No of fasteners at joint	n=3

Shear force on LHS of joint	FvEd1=4.2073 kN
Shear force on RHS of joint	FvEd2=4.2073 kN
Height of member (2)	h=225 mm
Loaded edge distance	he=175 mm

DESIGN	**Design axial load at joint**	**11.9 kN**
SUMMARY	**Number of fasteners per joint**	**3**
	Design joint resistance	**14.549 kN**

Location: Default case 4

Joint comprising 3 members (fasteners in double shear)

Design axial load at joint Fd'=11.9 kN

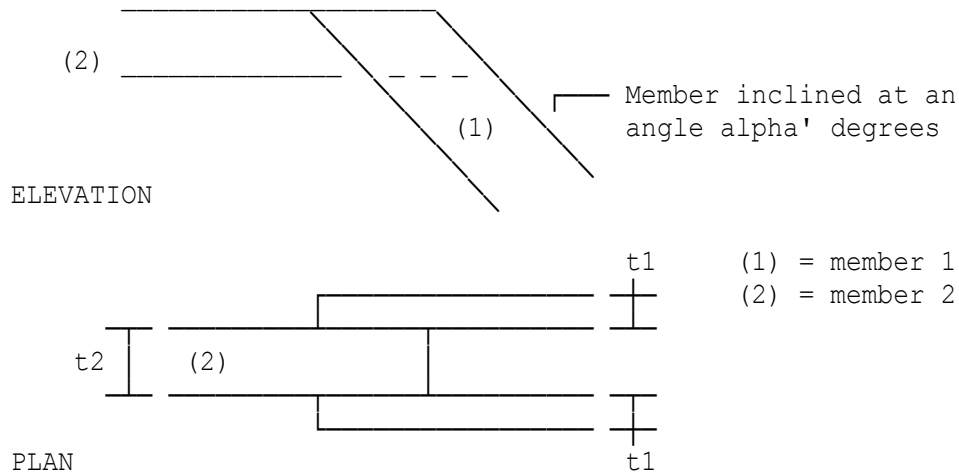

Thickness of member 1 t1=36 mm
Timber strength class C30.
Timber characteristic density pk1=380 kg/m³
Angle between grain and load alp1'=0°
Thickness of member 2 t2=72 mm
Timber strength class C30.
Timber characteristic density pk2=380 kg/m³
Angle between grain and load alp2'=45°
Bolt/dowel diameter (8 to 30 mm) bd=16 mm
Basic loads are in kN and will be derived from EC5 Section 8.
Charact fastener yield moment MyRk=0.3*400*bd^2.6=162141 Nmm
Charact.embedment strength fhok1=0.082*(1-0.01*bd)*pk1
=26.174 N/mm²
Denominator (expression 8.31) denom1=((K90*SIN(alp1)^2)
+COS(alp1)^2)=1
Embedment strength (Timber 1) fh1k=fhok1/denom1=26.174 N/mm²
Charact.embedment strength fhok2=0.082*(1-0.01*bd)*pk1
=26.174 N/mm²
Denominator (expression 8.31) denom2=((K90*SIN(alp2)^2)
+COS(alp2)^2)=1.295
Embedment strength (Timber 2) fh2k=fhok2/denom2=20.212 N/mm²
Factor beta=fh2k/fh1k=0.7722

Equations	g	h	j	k
	15076	11642	8730.5	12511

Min value of equations (g)-(k) Gmin=8730.5
Char fastener shear resistance basic=Gmin/1000=8.7305 kN

Design resistance per fastener pbl=kmod*2*basic/gamM=9.4021 kN
Number of fasteners required n=INT(Fd'/pbl)+1=2
Total No of fasteners at joint n=2

Shear force on LHS of joint	FvEd1=4.2073 kN
Shear force on RHS of joint	FvEd2=4.2073 kN
Height of member (2)	h=200 mm
Loaded edge distance	he=100 mm

DESIGN	**Design axial load at joint**	**11.9 kN**
SUMMARY	**Number of fasteners per joint**	**2**
	Design joint resistance	**18.804 kN**

Location: Default case 5

Joint comprising 3 members (fasteners in double shear)

Design axial load at joint Fd'=11.9 kN

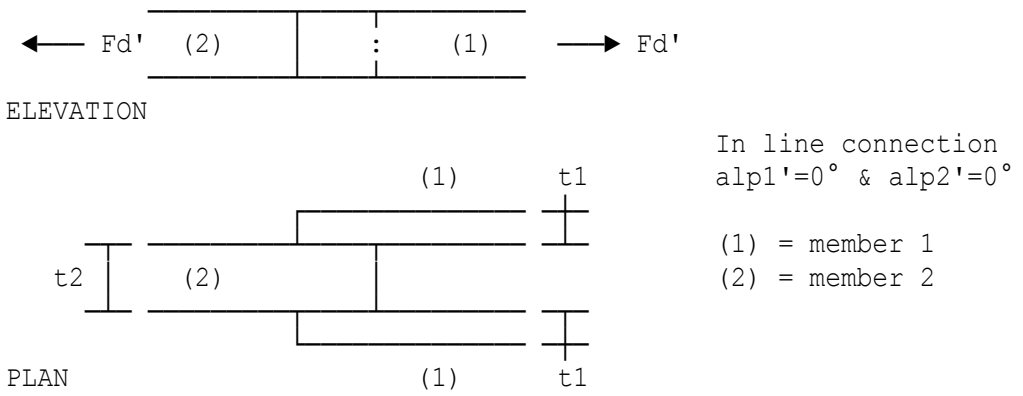

In line connection
alp1'=0° & alp2'=0°

(1) = member 1
(2) = member 2

Thickness of outer members t1=48.5 mm
Timber strength class D35.
Timber characteristic density pk1=540 kg/m³
Angle between grain and load alp1'=0 degrees
Thickness of other member t2=97 mm
Timber strength class D35.
Timber characteristic density pk2=540 kg/m³
Angle between grain and load alp2'=0 degrees
Bolt/dowel diameter (8 to 30 mm) bd=20 mm
Basic loads are in kN and will be derived from EC5 Section 8.
Charact fastener yield moment MyRk=0.3*400*bd^2.6=289640 Nmm
Charact.embedment strength fhok1=0.082*(1-0.01*bd)*pk1
=35.424 N/mm²
Denominator (expression 8.31) denom1=((K90*SIN(alp1)^2)
+COS(alp1)^2)=1
Embedment strength (Timber 1) fh1k=fhok1/denom1=35.424 N/mm²
Charact.embedment strength fhok2=0.082*(1-0.01*bd)*pk1
=35.424 N/mm²
Denominator (expression 8.31) denom2=((K90*SIN(alp2)^2)
+COS(alp2)^2)=1
Embedment strength (Timber 2) fh2k=fhok2/denom2=35.424 N/mm²
Factor beta=fh2k/fh1k=1

Equations	g	h	j	k
	34361	34361	17642	23297

Min value of equations (g)-(k) Gmin=17642
Char fastener shear resistance basic=Gmin/1000=17.642 kN

Design resistance per fastener pbl=kmod*2*basic/gamM=18.999 kN
Number of fasteners required n=INT(Fd'/pbl)+1=1
Total No of fasteners at joint n=1

DESIGN	**Design axial load at joint**	**11.9 kN**
SUMMARY	**Number of fasteners per joint**	**1**
	Design joint resistance	**18.999 kN**

Location: Default case 6

Joint comprising timber member fixed to metal plate

with fasteners in single shear

Design axial load at joint Fd'=6.37 kN

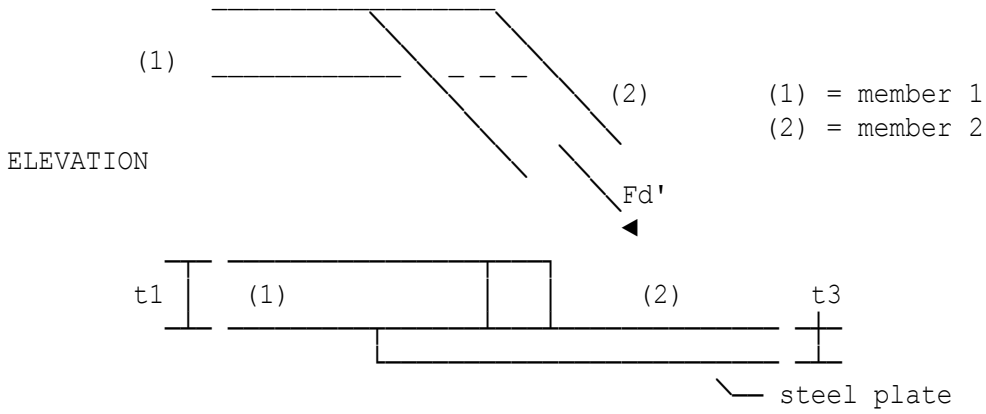

Thickness of timber member t1=47 mm
Timber strength class C24.
Timber characteristic density pk1=350 kg/m³
Angle between grain and load alp1'=45°
Thickness of steel plate t3=15 mm
Bolt diameter (10 to 12 mm) bd=12 mm

Fastener shear capacities

Basic loads are in kN and will be derived from EC5 Section 8.
Charact fastener yield moment MyRk=0.3*400*bd^2.6=76745 Nmm
Charact.embedment strength fhok1=0.082*(1-0.01*bd)*pk1
=25.256 N/mm²
Denominator (expression 8.31) denom1=((K90*SIN(alp1)^2)
+COS(alp1)^2)=1.265
Embedment strength (Timber 1) fh1k=fhok1/denom1=19.965 N/mm²
Factor beta=fh2k/fh1k=1
Min value of equations (a)-(e) Gmin=6826.6
Char fastener shear resistance basic=Gmin/1000=6.8266 kN

Design resistance per fastener pbl=kmod*basic/gamM=3.6759 kN
Total No of fasteners at joint n=2
Number of fasteners per row nfpr=2
Lines of fasteners to be adopted rpl=1
Spacing between fasteners a1=80 mm
Effect No of fasteners per row nef=nfpr^0.9*(a1/(13*bd))^0.25=1.5791
Effective joint design capacity Fvef=rpl*nef*pbl=5.8047 kN

Toothed-plate connector assembly

Toothed-plate connectors should comply with BS EN 912 and BS EN 14545.
Connector nominal diameter dc=50 mm

Design shear capacity for one toothed-plate connector unit

Thickness of metal in connector	tmet=0.9 mm
Toothed-plate connector height	hc=15 mm
Material factor for connection	gamM=1.3
Design capacity of one TPC unit	FvRd=interf*kmod*FvRk/(1000*gamM) =3.4267 kN

Combined effective joint design resistance

Combined joint design resistance	pbl=pbl1+pbl2=12.658 kN

Minimum bolt spacings

Angle alpha	alpha=0.7854 radians
Spacing parallel to grain	a1=(4+COS(alpha))*bd=56.485 mm
Spacing perpendicular to grain	a2=4*bd=48 mm
End distance (loaded end)	a3t=7*bd=84 mm
End distance (unloaded end)	a3c=4*bd=48 mm
Edge distance (loaded edge)	a4t=(2+2*SIN(alpha))*bd=40.971 mm
Edge distance (unloaded edge)	a4c=3*bd=36 mm

Minimum spacings for toothed-plate connectors - to EC5 Table 8.8

Spacing within one row parallel to grain:
a1=(1.2+0.3*COS(alpha))*dc=70.607 mm
Spacing between connector rows perpendicular to grain:
a2=1.2*dc=60 mm

End distance (loaded)	a3t=1.5*dc=75 mm
End distance (unloaded)	a3c=(0.9+0.6*SIN(alpha))*dc=66.213 mm
Edge distance (loaded)	a4t=(0.6+0.2*SIN(alpha))*dc=37.071 mm
Edge distance (unloaded)	a4c=0.6*dc=30 mm

Shear force on LHS of joint	FvEd1=2.2521 kN
Shear force on RHS of joint	FvEd2=2.2521 kN
Height of member (2)	h=200 mm
Loaded edge distance	he=100 mm

Joint slip check - to EC5 Section 7

Stiffness of joint final condition at the SLS:
Kserfj=Kserj/(1+2*kdef)=2983 N
Final deflection of the joint at SLS:
utser=Fdsls/Kserfj+2=3.4933 mm

DESIGN SUMMARY	**Design axial load at joint**	**6.37 kN**
	Number of fasteners per joint	**2**
	Contribution from bolts	**5.8047 kN**
	Contribution from connectors	**6.8535 kN**
	Combined design joint resistance	**12.658 kN**

Location: Default case 7

Joint comprising 2 members (fasteners in single shear)

Design axial load at joint Fd'=13.58 kN

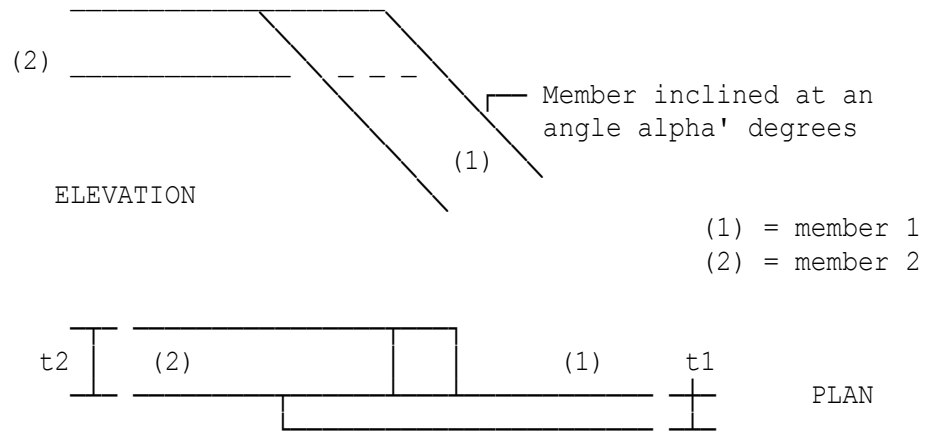

Thickness of member 1 t1=97 mm
Timber strength class C24.
Timber characteristic density pk1=350 kg/m³
Angle between grain and load alp1'=0°
Thickness of member 2 t2=72 mm
Timber strength class C24.
Timber characteristic density pk2=350 kg/m³
Angle between grain and load alp2'=42°
Bolt/dowel diameter (8 to 30 mm) bd=20 mm
Basic loads are in kN and will be derived from EC5 Section 8.
Charact fastener yield moment MyRk=0.3*400*bd^2.6=289640 Nmm
Charact.embedment strength fhok1=0.082*(1-0.01*bd)*pk1
=22.96 N/mm²
Denominator (expression 8.31) denom1=((K90*SIN(alp1)^2)
+COS(alp1)^2)=1
Embedment strength (Timber 1) fh1k=fhok1/denom1=22.96 N/mm²
Charact.embedment strength fhok2=0.082*(1-0.01*bd)*pk1
=22.96 N/mm²
Denominator (expression 8.31) denom2=((K90*SIN(alp2)^2)
+COS(alp2)^2)=1.291
Embedment strength (Timber 2) fh2k=fhok2/denom2=17.784 N/mm²
Factor beta=fh2k/fh1k=0.77458
Expressions (a)-(f) for fasteners in single shear refer to section 8.2.2 in EC5. Zero contribution from rope effect will be considered.
Equations a b c d e f
Min value of equations (a)-(f) Gmin=13392
Char fastener shear resistance basic=Gmin/1000=13.392 kN

Design resistance per fastener pbl=kmod*basic/gamM=9.2713 kN
Number of fasteners required n=INT(Fd'/pbl)+1=2
Total No of fasteners at joint n=2
Number of fasteners per row nfpr=2

Lines of fasteners to be adopted	rpl=1
Spacing between fasteners	a1=100 mm
Effect No of fasteners per row	nef=nfpr^0.9*(a1/(13*bd))^0.25=1.4695
Effective joint design capacity	Fvef=rpl*nef*pbl=13.625 kN

Shear force on LHS of joint	FvEd1=4.5434 kN
Shear force on RHS of joint	FvEd2=4.5434 kN
Height of member (2)	h=200 mm
Loaded edge distance	he=100 mm

DESIGN	**Design axial load at joint**	**13.58 kN**
SUMMARY	**Number of fasteners per joint**	**2**
	Effective joint design capacity	**13.625 kN**

Location: Default case 8

Joint comprising 3 members (fasteners in double shear)

Design axial load at joint Fd'=22 kN

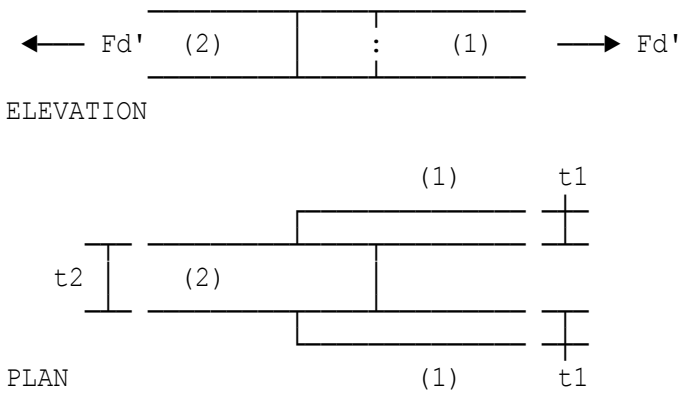

In line connection
alp1'=0° & alp2'=0°

(1) = member 1
(2) = member 2

Thickness of outer members t1=48.5 mm
Timber strength class D35.
Timber characteristic density pk1=540 kg/m³
Angle between grain and load alp1'=0 degrees
Thickness of other member t2=97 mm
Timber strength class D35.
Timber characteristic density pk2=540 kg/m³
Angle between grain and load alp2'=0 degrees
Bolt/dowel diameter (8 to 30 mm) bd=16 mm
Basic loads are in kN and will be derived from EC5 Section 8.
Charact fastener yield moment MyRk=0.3*400*bd^2.6=162141 Nmm
Charact.embedment strength fhok1=0.082*(1-0.01*bd)*pk1
=37.195 N/mm²
Denominator (expression 8.31) denom1=((K90*SIN(alp1)^2)
+COS(alp1)^2)=1
Embedment strength (Timber 1) fh1k=fhok1/denom1=37.195 N/mm²
Charact.embedment strength fhok2=0.082*(1-0.01*bd)*pk1
=37.195 N/mm²
Denominator (expression 8.31) denom2=((K90*SIN(alp2)^2)
+COS(alp2)^2)=1
Embedment strength (Timber 2) fh2k=fhok2/denom2=37.195 N/mm²
Factor beta=fh2k/fh1k=1
Expressions (g)-(k) for fasteners in double shear, refer to section 8.2.2 in EC5. Zero contribution from rope effect will be considered.

Equations	g	h	j	k
	28863	28863	13351	15976

Min value of equations (g)-(k) Gmin=13351
Char fastener shear resistance basic=Gmin/1000=13.351 kN

Design resistance per fastener pbl=kmod*2*basic/gamM=14.378 kN
Number of fasteners required n=INT(Fd'/pbl)+1=2
Total No of fasteners at joint n=2
Number of fasteners per row nfpr=1
Lines of fasteners to be adopted rpl=2
Spacing between fasteners a1=112 mm

Effect No of fasteners per row	nef=nfpr^0.9*(a1/(13*bd))^0.25=0.85662
Effective joint design capacity	Fvef=rpl*nef*pbl=24.633 kN

Minimum bolt spacings

Angle alpha	alpha=0 radians
Spacing parallel to grain	a1=(4+COS(alpha))*bd=80 mm
Spacing perpendicular to grain	a2=4*bd=64 mm
End distance (loaded end)	a3t=7*bd=112 mm
End distance (unloaded end)	a3c=4*bd=64 mm
Edge distance (loaded edge)	a4t=3*bd=48 mm
Edge distance (unloaded edge)	a4c=3*bd=48 mm

DESIGN	**Design axial load at joint**	**22 kN**
SUMMARY	**Number of fasteners per joint**	**2**
	Effective joint design capacity	**24.633 kN**

Location: Ex1 - Bolted timber connection

Timber to timber joint
with timber splice
plate adopted.

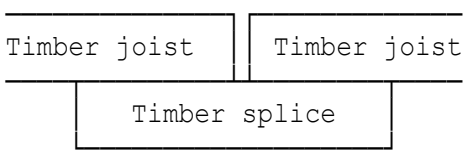

Plan view on splice

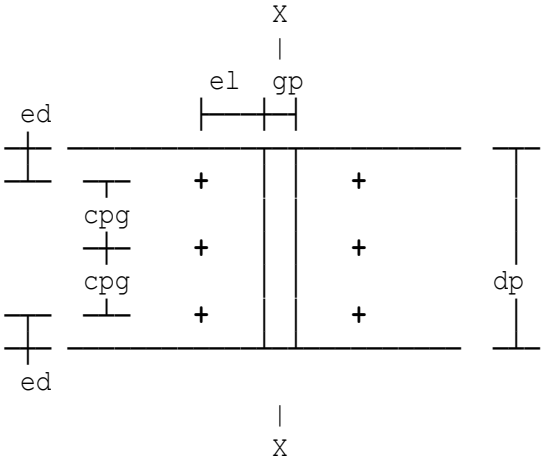

Three bolt symmetrical joint

with in line splice plate

designed to BS5268-2:2002

Shear load to be carried by joint F=1.15 kN
Moment resisted by bolt group BM=0.35 kNm
Depth of timber section dp=300 mm
Thickness of member 1 t1=47 mm
Strength class C22 to Table 8.
Timber characteristic density pk1=340 kg/m³
Thickness of timber splice plate t2=63 mm
Strength class C22 to Table 8.
Timber characteristic density pk2=340 kg/m³
Gap distance between joists gp=10 mm
Joint to be connected by bolts K2b=1.33
Fixing diameter (8 mm to 36 mm) d=16 mm
Actual edge distance to bolt ctr ed=65 mm
Actual end distance el=125 mm
Basic loads in kN will be derived from formula given in Annex G.
Constant Kd=1
Load duration for bolted/dowelled connection = long term.
Embedding strength (Timb 1) fhd1=fhod/den1=8.0742 N/mm²
Embedding strength (Timb 2) fhd2=fhod/den2=8.0742 N/mm²
Factor beta=fhd2/fhd1=1

Basic bolt shear capacity basic=1*Gmin/(Fd*Kd)=2.9517 kN
Mod factor for moisture content K56=1
Mod factor for number of bolts K57=1

Dry stresses are appropriate
Depth factor K7=(300/dp)^0.11=1

DESIGN SUMMARY

Bolt summary:
Max resultant force 2.0942 kN
Angle to grain 10.547 degrees
Permissible bolt load 2.9517 kN

Timber splice plate summary:
Combined bend moment 0.4995 kNm
Applied bend stress 0.52857 N/mm²
Permiss bend Stress 7.48 N/mm²
Applied shear stress 0.10952 N/mm²
Permiss shear Stress 0.781 N/mm²

Location: Ex2 - Timber splice plate

Timber to timber joint
with timber splice
plate adopted.

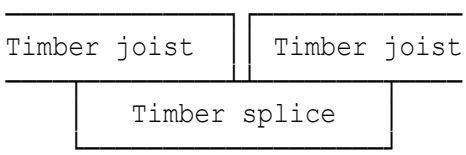

Plan view on splice

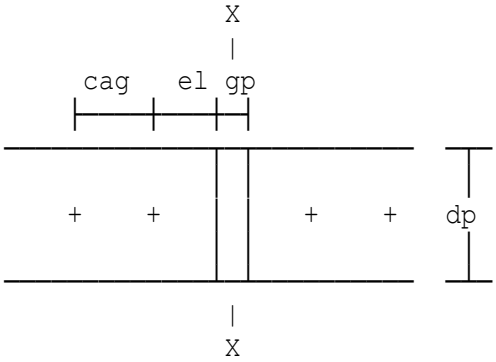

Two bolt symmetrical joint

with in line splice plate

designed to BS5268-2:2002

Shear load to be carried by joint F=0.35 kN
Moment resisted by bolt group BM=0.15 kNm
Depth of timber section dp=200 mm
Thickness of member 1 t1=47 mm
Strength class C22 to Table 8.
Timber characteristic density pk1=340 kg/m³
Thickness of timber splice plate t2=47 mm
Strength class C22 to Table 8.
Timber characteristic density pk2=340 kg/m³
Gap distance between joists gp=5 mm
Joint to be connected by bolts K2b=1.33
Fixing diameter (8 mm to 36 mm) d=16 mm
Actual end distance el=100 mm
Actual centres of bolts // grain cag=150 mm

Basic loads in kN will be derived from formula given in Annex G.
Constant Kd=1
Load duration for bolted/dowelled connection = medium term.
Fixing spacing parallel to the grain alphapar=112 mm
Embedding strength (Timb 1) fhd1=fhod/den1=11.881 N/mm²
Embedding strength (Timb 2) fhd2=fhod/den2=11.881 N/mm²
Factor beta=fhd2/fhd1=1
Equations G1 to G6 in annex G in BS5268-2:2002.

Basic bolt shear capacity basic=1*Gmin/(Fd*Kd)=3.5158 kN
Mod factor for moisture content K56=1
Mod factor for number of bolts K57=1

Dry stresses are appropriate
Depth factor K7=(300/dp)^0.11=1.0456

DESIGN SUMMARY

Bolt summary:
Max resultant force 1.175 kN
Angle to grain 90 degrees
Permissible bolt load 3.5158 kN

Timber splice plate summary:
Combined bend moment 0.21213 kNm
Applied bend stress 0.67699 N/mm²
Permiss bend Stress 9.7765 N/mm²
Applied shear stress 0.061375 N/mm²
Permiss shear Stress 0.97625 N/mm²

Location: Ex3 - Steel splice plate

Timber to timber joint
with steel splice
plate adopted.

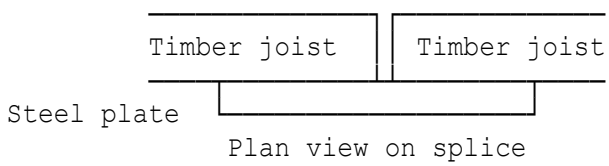

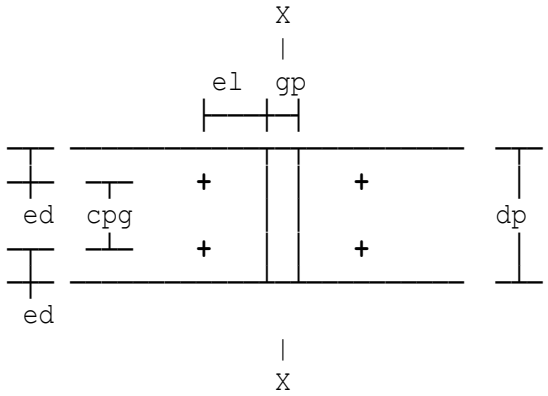

Two bolt symmetrical joint
with in line splice plate
designed to BS5268-2:2002

Shear load to be carried by joint F=0.35 kN
Moment resisted by bolt group BM=0.15 kNm
Depth of timber section dp=200 mm
Thickness of member 1 t1=47 mm
Strength class C22 to Table 8.
Timber characteristic density pk1=340 kg/m³
Thickness of steel splice plate st=10 mm
Gap distance between joists gp=0 mm
Joint to be connected by bolts K2b=1.33
Fixing diameter (8 mm to 36 mm) d=16 mm
Actual edge distance to bolt ctr ed=64 mm
Actual end distance el=112 mm
Basic loads in kN will be derived from formula given in Annex G.
Constant Kd=1
Load duration for bolted/dowelled connection = short term.
Embedding strength (Timb 1) fhd1=fhod/den1=12.265 N/mm²

Basic bolt shear capacity basic=1*Gmin/(Fd*Kd)=3.6292 kN
Mod factor for moisture content K56=0.7
Mod factor for number of bolts K57=1

DESIGN SUMMARY

Bolt summary:
Max resultant force 2.0907 kN
Angle to grain 4.8016 degrees
Permissible bolt load 2.5405 kN

Steel splice plate summary:
Combined bend moment 0.1892 kNm
Applied bend stress 2.838 N/mm²
Permiss bend Stress 180 N/mm²
Applied shear stress 0.21084 N/mm²
Permiss shear stress 100 N/mm²

Location: Ex4 - Timber overlap splice

Timber to timber
overlap joint to
be adopted.

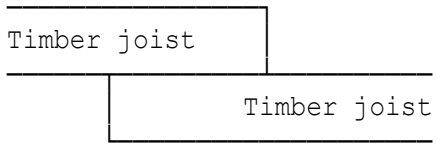

Plan view on splice

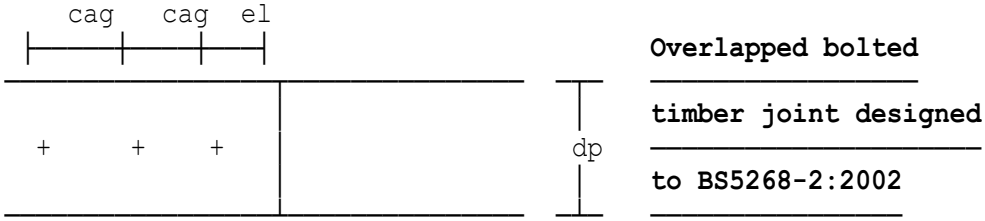

Shear load to be carried by joint	F=2 kN
Moment resisted by bolt group	BM=0.25 kNm
Depth of timber section	dp=200 mm
Thickness of member 1	t1=75 mm
Strength class C22 to Table 8.	
Timber characteristic density	pk1=340 kg/m³
Thickness of member 2	t2=75 mm
Strength class C22 to Table 8.	
Timber characteristic density	pk2=340 kg/m³
Joint to be connected by bolts	K2b=1.33
Fixing diameter (8 mm to 36 mm)	d=16 mm
Actual end distance	el=125 mm
Actual centres of bolts // grain	cag=150 mm

Basic loads in kN will be derived from formula given in Annex G.

Constant	Kd=1

Load duration for bolted/dowelled connection = medium term.
Fixing spacing parallel to the grain alphapar=100 mm

Embedding strength (Timb 1)	fhd1=fhod/den1=11.226 N/mm²
Embedding strength (Timb 2)	fhd2=fhod/den2=11.226 N/mm²
Factor	beta=fhd2/fhd1=1

Equations G1 to G6 in annex G in BS5268-2:2002.

Basic bolt shear capacity	basic=1*Gmin/(Fd*Kd)=5.3012 kN
Mod factor for moisture content	K56=0.4
Mod factor for number of bolts	K57=1

DESIGN SUMMARY

Bolt summary:
Max resultant force 1.5 kN
Angle to grain 90 degrees
Permissible bolt load 2.1205 kN

Location: Ex5 - Timber splice plate

Timber to timber joint
with timber splice
plate adopted.

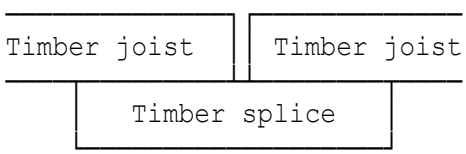

Plan view on splice

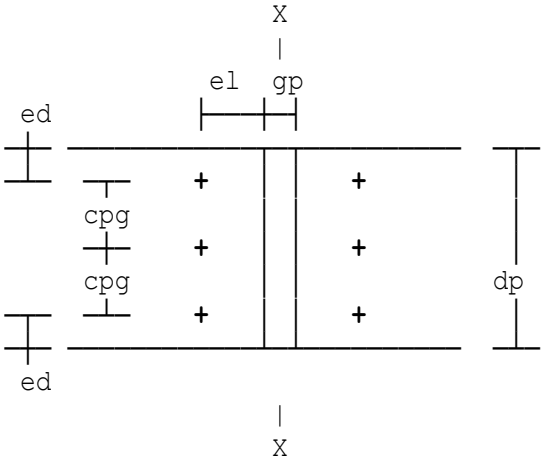

Three bolt symmetrical joint

with in line splice plate

designed to BS5268-2:2002

Shear load to be carried by joint F=0.5 kN
Moment resisted by bolt group BM=0.25 kNm
Depth of timber section dp=225 mm
Thickness of member 1 t1=76 mm
Strength class C22 to Table 8.
Timber characteristic density pk1=340 kg/m³
Thickness of timber splice plate t2=76 mm
Strength class C22 to Table 8.
Timber characteristic density pk2=340 kg/m³
Gap distance between joists gp=50 mm
Joint to be connected by bolts K2b=1.33
Fixing diameter (8 mm to 36 mm) d=12 mm
Actual edge distance to bolt ctr ed=48 mm
Actual end distance el=90 mm
Basic loads in kN will be derived from formula given in Annex G.
Constant Kd=1
Load duration for bolted/dowelled connection = long term.
Embedding strength (Timb 1) fhd1=fhod/den1=8.5681 N/mm²
Embedding strength (Timb 2) fhd2=fhod/den2=8.5681 N/mm²
Factor beta=fhd2/fhd1=1

Basic bolt shear capacity basic=1*Gmin/(Fd*Kd)=2.934 kN
Mod factor for moisture content K56=1
Mod factor for number of bolts K57=1

Dry stresses are appropriate
Depth factor K7=(300/dp)^0.11=1.0322

DESIGN SUMMARY

Bolt summary:
Max resultant force 1.9451 kN
Angle to grain 4.9154 degrees
Permissible bolt load 2.934 kN

Timber splice plate summary:
Combined bend moment 0.3075 kNm
Applied bend stress 0.47953 N/mm²
Permiss bend Stress 7.7205 N/mm²
Applied shear stress 0.052772 N/mm²
Permiss shear Stress 0.781 N/mm²

Location: Ex6 - Timber splice plate

Timber to timber joint
with timber splice
plate adopted.

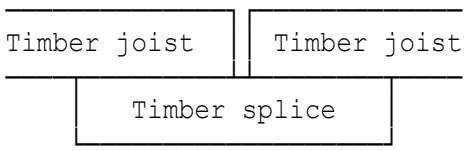

Plan view on splice

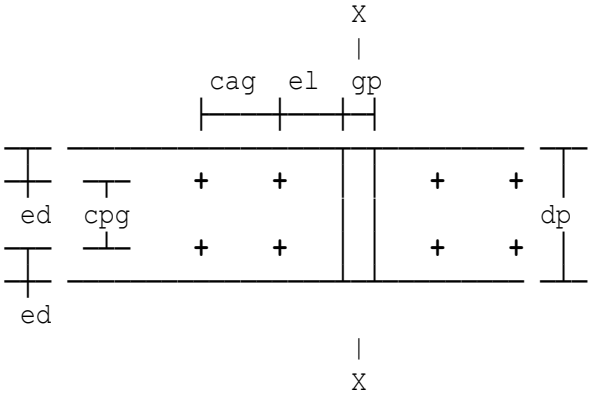

Four bolt symmetrical joint
with in line splice plate
designed to BS5268-2:2002

Shear load to be carried by joint F=0.9 kN
Moment resisted by bolt group BM=0.45 kNm
Depth of timber section dp=225 mm
Thickness of member 1 t1=47 mm
Strength class C22 to Table 8.
Timber characteristic density pk1=340 kg/m³
Thickness of timber splice plate t2=47 mm
Strength class C22 to Table 8.
Timber characteristic density pk2=340 kg/m³
Gap distance between joists gp=0 mm
Joint to be connected by bolts K2b=1.33
Fixing diameter (8 mm to 36 mm) d=12 mm
Actual edge distance to bolt ctr ed=65 mm
Actual end distance el=125 mm
Actual centres of bolts // grain cag=100 mm
Basic loads in kN will be derived from formula given in Annex G.
Constant Kd=1
Load duration for bolted/dowelled connection = long term.
Fixing spacing parallel to the grain alphapar=84 mm
Embedding strength (Timb 1) fhd1=fhod/den1=9.3782 N/mm²
Embedding strength (Timb 2) fhd2=fhod/den2=9.3782 N/mm²
Factor beta=fhd2/fhd1=1

Basic bolt shear capacity basic=1*Gmin/(Fd*Kd)=2.1585 kN
Mod factor for moisture content K56=1
Mod factor for number of bolts K57=1

DESIGN SUMMARY

Bolt summary:
Max resultant force 1.8011 kN
Angle to grain 51.405 degrees
Permissible bolt load 2.1585 kN

Location: Ex7 - Timber splice plate

Timber to timber joint
with timber splice
plate adopted.

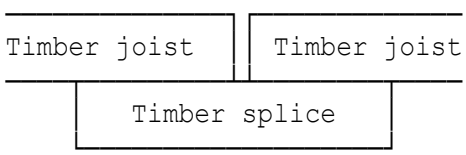

Plan view on splice

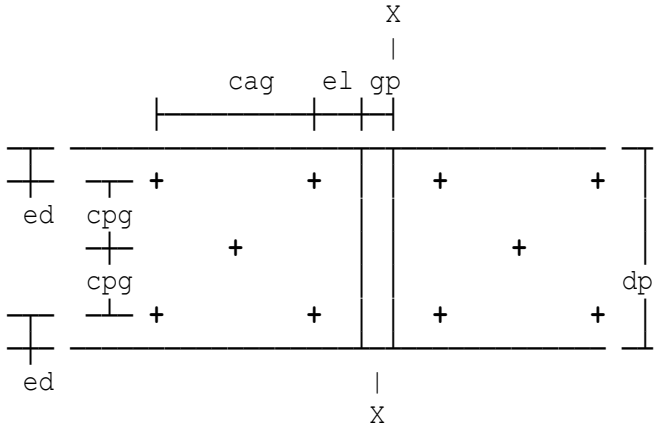

Five bolt symmetrical joint with in line splice plate designed to BS5268-2:2002

```
Shear load to be carried by joint F=2.25 kN
Moment resisted by bolt group     BM=0.8 kNm
Depth of timber section           dp=300 mm
Thickness of member 1             t1=50 mm
Strength class C22 to Table 8.
Timber characteristic density     pk1=340 kg/m³
Thickness of timber splice plate  t2=50 mm
Strength class C22 to Table 8.
Timber characteristic density     pk2=340 kg/m³
Gap distance between joists       gp=0 mm
Joint to be connected by bolts    K2b=1.33
Fixing diameter (8 mm to 36 mm)   d=16 mm
Actual edge distance to bolt ctr  ed=65 mm
Actual end distance               el=125 mm
Actual centres of bolts // grain  cag=100 mm
Basic loads in kN will be derived from formula given in Annex G.
Constant                          Kd=1
Load duration for bolted/dowelled connection = long term.
Fixing spacing parallel to the grain alphapar=100 mm
Embedding strength (Timb 1)       fhd1=fhod/den1=8.6819 N/mm²
Embedding strength (Timb 2)       fhd2=fhod/den2=8.6819 N/mm²
Factor                            beta=fhd2/fhd1=1

Basic bolt shear capacity         basic=1*Gmin/(Fd*Kd)=2.8343 kN
Mod factor for moisture content   K56=1
Mod factor for number of bolts    K57=1
```

Dry stresses are appropriate
Depth factor K7=(300/dp)^0.11=1

DESIGN SUMMARY

Bolt summary:
Max resultant force 2.2893 kN
Angle to grain 40.22 degrees
Permissible bolt load 2.8343 kN

Timber splice plate summary:
Combined bend moment 1.1938 kNm
Applied bend stress 1.5917 N/mm²
Permiss bend Stress 7.48 N/mm²
Applied shear stress 0.25376 N/mm²
Permiss shear Stress 0.781 N/mm²

Location: Ex1 - Bolted timber connection

Timber to timber joint
with timber splice
plate adopted

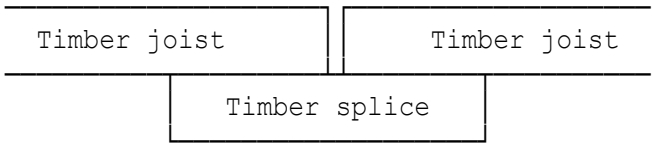

Plan view on splice

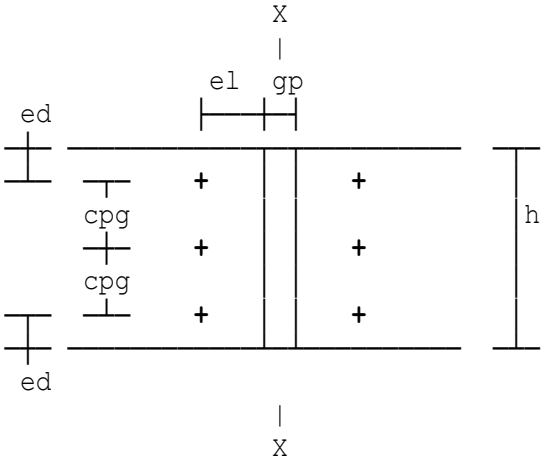

Three bolt symmetrical
joint with in line
splice plate to EC5

```
Design shear to be resisted       Fd'=1.61 kN
Design moment to be resisted      Md=0.49 kNm
Depth of timber section           h=300 mm
Thickness of member 1             t1=47 mm
Timber strength class C22.
Timber characteristic density     pk1=340 kg/m³
Thickness of timber splice plate  t2=63 mm
Timber strength class C22.
Timber characteristic density     pk2=340 kg/m³
Gap distance between joists       gp=10 mm
Fixing diameter (8 mm to 30 mm)   bd=16 mm
Depth factor (Clause 3.2)         kh=1.0
Actual edge distance to bolt ctr  ed=65 mm
Actual end distance               el=125 mm
Basic loads in kN will be derived from the expressions in Section 8
of Eurocode 5.
Char fastener yield moment        MyRk=0.3*400*bd^2.6=162141 Nmm
Char embedment strength           fhok1=0.082*(1-0.01*bd)*pk1=23.419
Embedding strength (Timb 1)       fh1k=fhok1/denom1=22.965 N/mm²
Char embedment strength           fhok2=0.082*(1-0.01*bd)*pk2=23.419
compute (expression 8.31)     denom2=((K90*SIN(alpha)^2)+COS(alpha)^2)
                                  =1.0198
Embedding strength (Timb 2)       fh2k=fhok2/denom2=22.965 N/mm²
Factor                            beta=fh2k/fh1k=1
Equations  a        b        c         d         e         f
Min value of equations (a)-(f)    Gmin=8521.8
Char bolt shear resistance        basic=Gmin/1000=8.5218 kN
Design resistance per bolt        pbl=kmod/gamM*basic=5.2442 kN
```

Load-sharing modification factor	ksys=1.1
Design bending strength	fmd=kh*ksys*fmk*kmod/gamM=14.892 N/mm²
Design shear strength	fvd=ksys*fvk*kmod/gamM=2.5723 N/mm²

Check splitting capacity of the connection

Design resultant force	RF=2.9319 kN
Tension force component ⊥ grain	FvEd=RF*SIN(alpha)=0.53666 kN
Loaded edge distance	he=235 mm
Design splitting capacity	F90Rd=F90Rk*kmod/gamM=13.336 kN

DESIGN SUMMARY

Bolt summary:

Max resultant force	**2.9319 kN**
Angle to grain	**10.547 degrees**
Effect bolt design capacity	**5.2442 kN**

Timber splice plate summary:

Combined bend moment	**0.6993 kNm**
Design bend stress	**0.74 N/mm²**
Design bend strength	**14.892 N/mm²**
Design shear stress	**0.15333 N/mm²**
Design shear strength	**2.5723 N/mm²**

Location: Ex2 - Timber splice plate

Timber to timber joint
with timber splice
plate adopted

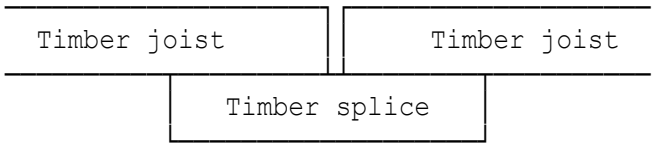

Plan view on splice

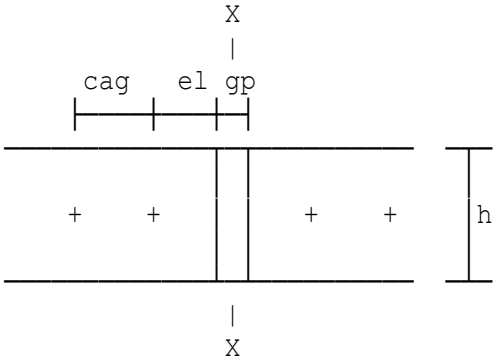

Two bolt symmetrical joint with in line splice plate to EC5

```
Design shear to be resisted       Fd'=0.49 kN
Design moment to be resisted      Md=0.21 kNm
Depth of timber section           h=200 mm
Thickness of member 1             t1=47 mm
Timber strength class C22.
Timber characteristic density     pk1=340 kg/m³
Thickness of timber splice plate  t2=47 mm
Timber strength class C22.
Timber characteristic density     pk2=340 kg/m³
Gap distance between joists       gp=5 mm
Fixing diameter (8 mm to 30 mm)   bd=16 mm
Depth factor (Clause 3.2)         kh=1.0
Actual end distance               el=100 mm
Actual centres of bolts // grain  cag=150 mm

Basic loads in kN will be derived from the expressions in Section 8
of Eurocode 5.
Char fastener yield moment        MyRk=0.3*400*bd^2.6=162141 Nmm
Fixing spacing // to the grain    alphapar=112 mm
Char embedment strength           fhok1=0.082*(1-0.01*bd)*pk1=23.419
Embedding strength (Timb 1)       fh1k=fhok1/denom1=14.729 N/mm²
Char embedment strength           fhok2=0.082*(1-0.01*bd)*pk2=23.419
compute (expression 8.31)     denom2=((K90*SIN(alpha)^2)+COS(alpha)^2)
                                  =1.59
Embedding strength (Timb 2)       fh2k=fhok2/denom2=14.729 N/mm²
Factor                            beta=fh2k/fh1k=1
Expressions (a)-(f) for fasteners in single shear  refer to section
8.2.2 in EC5.  Zero contribution from rope effect will be considered.
Equations  a        b        c         d         e         f
Min value of equations (a)-(f)    Gmin=4587.9
Char bolt shear resistance        basic=Gmin/1000=4.5879 kN
Design resistance per bolt        pbl=kmod/gamM*basic=2.8233 kN
```

Load-sharing modification factor	ksys=1.1
Design bending strength	fmd=kh*ksys*fmk*kmod/gamM=14.892 N/mm²
Design shear strength	fvd=ksys*fvk*kmod/gamM=2.5723 N/mm²

Check splitting capacity of the connection

Design resultant force	RF=1.645 kN
Tension force component ⊥ grain	FvEd=RF*SIN(alpha)=1.645 kN
Loaded edge distance	he=100 mm
Design splitting capacity	F90Rd=F90Rk*kmod/gamM=5.7265 kN

DESIGN SUMMARY

Bolt summary:	
Max resultant force	**1.645 kN**
Angle to grain	**90 degrees**
Design capacity per bolt	**2.8233 kN**
Timber splice plate summary:	
Combined bend moment	**0.29698 kNm**
Design bend stress	**0.94779 N/mm²**
Design bend strength	**14.892 N/mm²**
Design shear stress	**0.085925 N/mm²**
Design shear strength	**2.5723 N/mm²**

Location: Ex3 - Steel splice plate

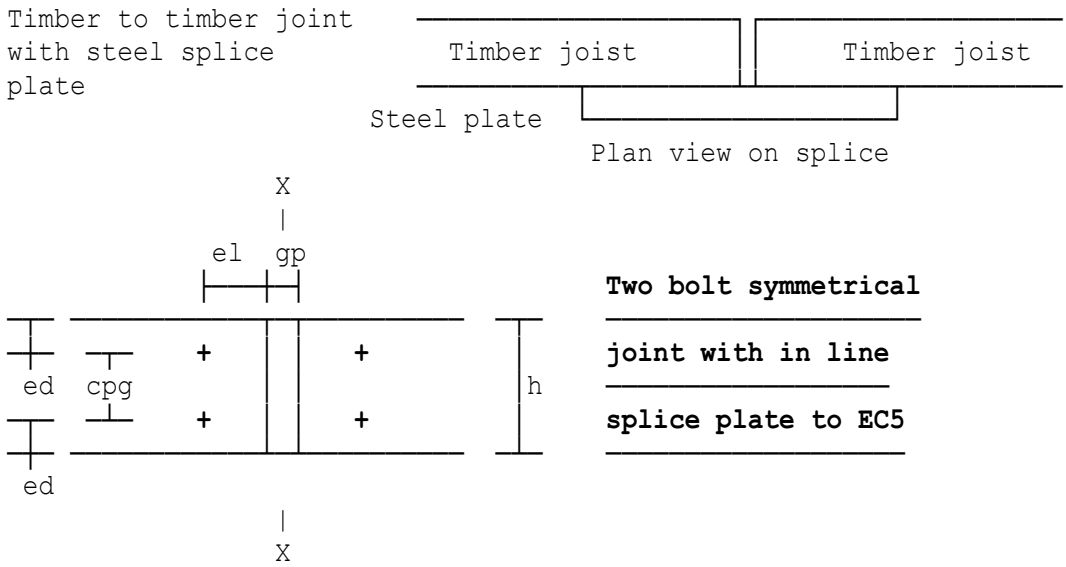

Design shear to be resisted	Fd'=0.49 kN
Design moment to be resisted	Md=0.21 kNm
Depth of timber section	h=200 mm
Thickness of member 1	t1=47 mm
Timber strength class C22.	
Timber characteristic density	pk1=340 kg/m³
Thickness of steel splice plate	st=10 mm
Gap distance between joists	gp=0 mm
Fixing diameter (8 mm to 30 mm)	bd=16 mm
Depth factor (Clause 3.2)	kh=1.0
Actual edge distance to bolt ctr	ed=64 mm
Actual end distance	el=112 mm

Basic loads in kN will be derived from the expressions in Section 8 of Eurocode 5.

Char fastener yield moment	MyRk=0.3*400*bd^2.6=162141 Nmm
Char embedment strength	fhok1=0.082*(1-0.01*bd)*pk1=23.419
Embedding strength (Timb 1)	fh1k=fhok1/denom1=23.323 N/mm²
Min value of equations (a)-(e)	Gmin=8196.6
Char bolt shear resistance	basic=Gmin/1000=8.1966 kN
Design resistance per bolt	pbl=kmod/gamM*basic=5.0441 kN

Check splitting capacity of the connection

Design resultant force	RF=2.9269 kN
Tension force component ⊥ grain	FvEd=RF*SIN(alpha)=0.245 kN
Loaded edge distance	he=136 mm
Design splitting capacity	F90Rd=F90Rk*kmod/gamM=8.3477 kN

DESIGN SUMMARY

Bolt summary:	
Max resultant force	**2.9269 kN**
Angle to grain	**4.8016 degrees**
Effect bolt design capacity	**5.0441 kN**
Steel splice plate summary:	
Combined bend moment	**0.26488 kNm**
Design bend stress	**3.9732 N/mm²**
Design bend strength	**275 N/mm²**
Design shear stress	**0.29518 N/mm²**
Design shear strength	**255 N/mm²**

Location: Ex4 - Timber overlap splice

Timber to timber
overlap joint

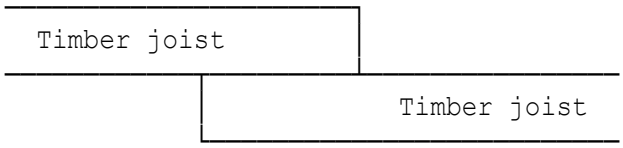

Plan view on splice

Total number of bolts nbolt=4

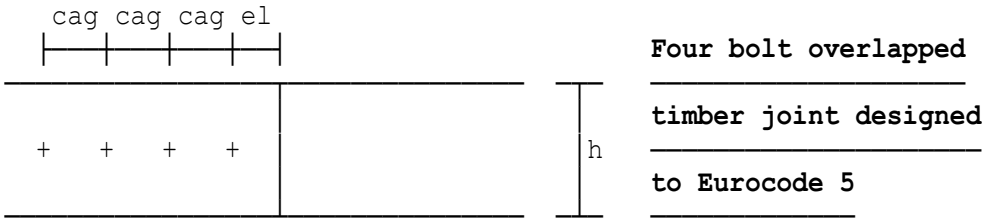

Design shear to be resisted Fd'=2.8 kN
Design moment to be resisted Md=0.35 kNm
Depth of timber section h=200 mm
Thickness of member 1 t1=75 mm
Timber strength class C22.
Timber characteristic density pk1=340 kg/m³
Thickness of member 2 t2=75 mm
Timber strength class C22.
Timber characteristic density pk2=340 kg/m³
Fixing diameter (8 mm to 30 mm) bd=16 mm
Depth factor (Clause 3.2) kh=1.0
Actual end distance el=125 mm
Actual centres of bolts // grain cag=150 mm

Basic loads in kN will be derived from the expressions in Section 8 of Eurocode 5.
Char fastener yield moment MyRk=0.3*400*bd^2.6=162141 Nmm
Fixing spacing // to the grain alphapar=100 mm
Char embedment strength fhok1=0.082*(1-0.01*bd)*pk1=23.419
Embedding strength (Timb 1) fh1k=fhok1/denom1=14.729 N/mm²
Char embedment strength fhok2=0.082*(1-0.01*bd)*pk2=23.419
compute (expression 8.31) denom2=((K90*SIN(alpha)^2)+COS(alpha)^2)
=1.59
Embedding strength (Timb 2) fh2k=fhok2/denom2=14.729 N/mm²
Factor beta=fh2k/fh1k=1
Expressions (a)-(f) for fasteners in single shear refer to section 8.2.2 in EC5. Zero contribution from rope effect will be considered.
Equations a b c d e f
Min value of equations (a)-(f) Gmin=7321.2
Char bolt shear resistance basic=Gmin/1000=7.3212 kN
Design resistance per bolt pbl=kmod/gamM*basic=4.5053 kN

Check splitting capacity of the connection

Design resultant force	RF=1.4778 kN
Tension force component ⊥ grain	FvEd=RF*SIN(alpha)=1.4778 kN
Loaded edge distance	he=100 mm
Design splitting capacity	F90Rd=F90Rk*kmod/gamM=9.138 kN

	Bolt summary:	
DESIGN	**Max resultant force**	**1.4778 kN**
SUMMARY	**Angle to grain**	**90 degrees**
	Design capacity per bolt	**4.5053 kN**

Location: Ex5 - Timber splice plate

Timber to timber joint
with timber splice
plate adopted

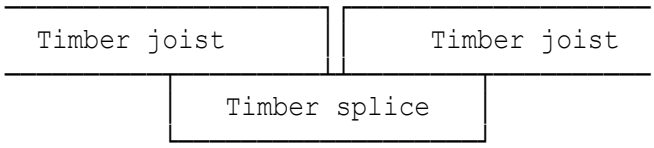

Plan view on splice

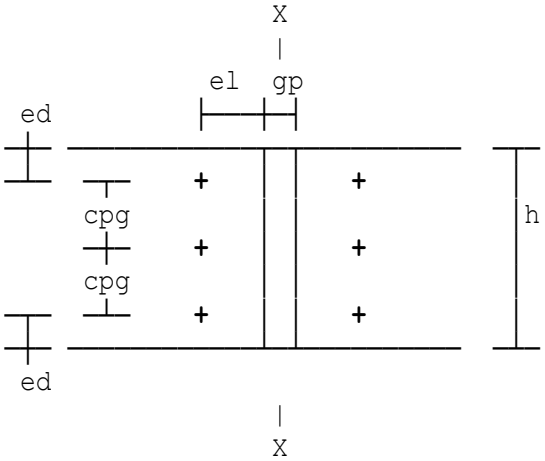

Three bolt symmetrical
joint with in line
splice plate to EC5

```
Design shear to be resisted       Fd'=0.7 kN
Design moment to be resisted      Md=0.35 kNm
Depth of timber section           h=225 mm
Thickness of member 1             t1=76 mm
Timber strength class C22.
Timber characteristic density     pk1=340 kg/m³
Thickness of timber splice plate  t2=76 mm
Timber strength class C22.
Timber characteristic density     pk2=340 kg/m³
Gap distance between joists       gp=50 mm
Fixing diameter (8 mm to 30 mm)   bd=12 mm
Depth factor (Clause 3.2)         kh=1.0
Actual edge distance to bolt ctr  ed=48 mm
Actual end distance               el=90 mm
Basic loads in kN will be derived from the expressions in Section 8
of Eurocode 5.
Char fastener yield moment        MyRk=0.3*400*bd^2.6=76745 Nmm
Char embedment strength           fhok1=0.082*(1-0.01*bd)*pk1=24.534
Embedding strength (Timb 1)       fh1k=fhok1/denom1=24.439 N/mm²
Char embedment strength           fhok2=0.082*(1-0.01*bd)*pk2=24.534
compute (expression 8.31)     denom2=((K90*SIN(alpha)^2)+COS(alpha)^2)
                                  =1.0039
Embedding strength (Timb 2)       fh2k=fhok2/denom2=24.439 N/mm²
Factor                            beta=fh2k/fh1k=1
Equations  a        b        c         d         e         f
Min value of equations (a)-(f)    Gmin=7715.7
Char bolt shear resistance        basic=Gmin/1000=7.7157 kN
Design resistance per bolt        pbl=kmod/gamM*basic=4.7481 kN
```

Load-sharing modification factor	ksys=1.1
Design bending strength	fmd=kh*ksys*fmk*kmod/gamM=14.892 N/mm²
Design shear strength	fvd=ksys*fvk*kmod/gamM=2.5723 N/mm²

Check splitting capacity of the connection

Design resultant force	RF=2.7232 kN
Tension force component ⊥ grain	FvEd=RF*SIN(alpha)=0.23333 kN
Loaded edge distance	he=177 mm
Design splitting capacity	F90Rd=F90Rk*kmod/gamM=18.86 kN

DESIGN SUMMARY

Bolt summary:	
Max resultant force	**2.7232 kN**
Angle to grain	**4.9154 degrees**
Effect bolt design capacity	**4.7481 kN**
Timber splice plate summary:	
Combined bend moment	**0.4305 kNm**
Design bend stress	**0.67135 N/mm²**
Design bend strength	**14.892 N/mm²**
Design shear stress	**0.073881 N/mm²**
Design shear strength	**2.5723 N/mm²**

Location: Ex6 - Timber splice plate

Timber to timber joint
with timber splice
plate adopted

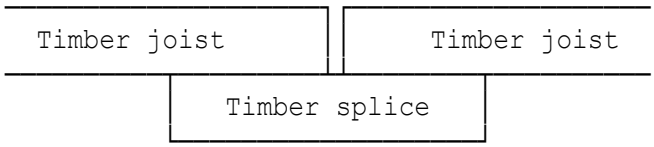

Plan view on splice

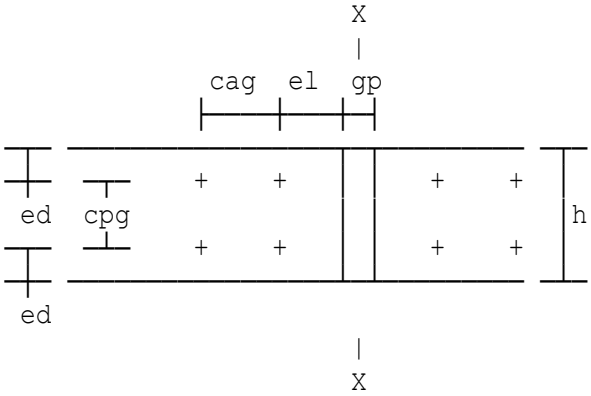

Four bolt symmetrical
joint with in line
splice plate to EC5

Design shear to be resisted Fd'=1.26 kN
Design moment to be resisted Md=0.63 kNm
Depth of timber section h=225 mm
Thickness of member 1 t1=47 mm
Timber strength class C22.
Timber characteristic density pk1=340 kg/m³
Thickness of timber splice plate t2=47 mm
Timber strength class C22.
Timber characteristic density pk2=340 kg/m³
Gap distance between joists gp=0 mm
Fixing diameter (10 mm or 12 mm) bd=12 mm
Depth factor (Clause 3.2) kh=1.0
Actual edge distance to bolt ctr ed=65 mm
Actual end distance el=125 mm
Actual centres of bolts // grain cag=100 mm
Basic loads in kN will be derived from the expressions in Section 8
of Eurocode 5.
Char fastener yield moment MyRk=0.3*400*bd^2.6=76745 Nmm
Fixing spacing // to the grain alphapar=84 mm
Char embedment strength fhok1=0.082*(1-0.01*bd)*pk1=24.534
Embedding strength (Timb 1) fh1k=fhok1/denom1=18.534 N/mm²
Char embedment strength fhok2=0.082*(1-0.01*bd)*pk2=24.534
compute (expression 8.31) denom2=((K90*SIN(alpha)^2)+COS(alpha)^2)
=1.3238
Embedding strength (Timb 2) fh2k=fhok2/denom2=18.534 N/mm²
Factor beta=fh2k/fh1k=1
Equations a b c d e f
Min value of equations (a)-(f) Gmin=4329.8
Char bolt shear resistance basic=Gmin/1000=4.3298 kN
Design resistance per bolt pbl=kmod/gamM*basic=2.6645 kN

Total No of bolts at joint n=4
Number of bolts per row nfpr=2

Spacing between bolts // grain a1=100 mm
EC5 effect No fasteners per row nef=nfpr^0.9*(a1/(13*bd))^0.25=1.6697
TRADA effect No of bolts per row nef=(nfpr)^0.8=1.7411
Effective No of bolts to be adopted nef=1.7411
Effective bolt design capacity Fvef=pbl*nef/nfpr=2.3196 kN

Toothed-plate connector assembly

Toothed-plate connectors should comply with BS EN 912 and BS EN 14545.
Connector nominal diameter dc=50 mm

Design shear capacity for one toothed-plate connector unit

Thickness of metal in connector tmet=0.9 mm
Toothed-plate connector height hc=15 mm
Material factor for connection gamM=1.3
Design capacity of one TPC unit FvRd=interf*kmod*FvRk/(1000*gamM)
=3.8044 kN

Combined design resistance per fixing

Combined design resistance pbl=pbl1+pbl2=6.124 kN

Check splitting capacity of the connection

Design resultant force RF=2.5215 kN
Tension force component ⊥ grain FvEd=RF*SIN(alpha)=1.9707 kN
Loaded edge distance he=160 mm
Design splitting capacity F90Rd=F90Rk*kmod/gamM=9.5294 kN

Minimum spacings for toothed-plate connectors - to EC5 Table 8.8

Spacing within one row parallel to grain:
a1=(1.2+0.3*COS(alpha))*dc=69.357 mm
Spacing between connector rows perpendicular to grain:
a2=1.2*dc=60 mm
End distance (loaded) a3t=1.5*dc=75 mm
End distance (unloaded) a3c=(0.9+0.6*SIN(alpha))*dc=68.447 mm
Edge distance (loaded) a4t=(0.6+0.2*SIN(alpha))*dc=37.816 mm
Edge distance (unloaded) a4c=0.6*dc=30 mm

Joint slip check - to EC5 Section 7

Stiffness of joint final condition at the SLS:
Kserfj=Kserj/(1+2*kdef)=2897.7 N
Final deflection of the joint at SLS:
utser=Fdsls/Kserfj+2=2.3041 mm

DESIGN SUMMARY

Bolt/toothed-plate connector summary:	
Max resultant force	**2.5215 kN**
Angle to grain	**51.405 degrees**
Contribution from bolt	**2.3196 kN**
Contribution from connector	**3.8044 kN**
Combined design resistance	**6.124 kN**

Toothed-plate connectors of nominal diameter 50 mm need to be provided with each 12 mm diameter bolt. Toothed-plate connectors should comply with BS EN 912 and BS EN 14545.

Location: Ex7 - Timber splice plate

Timber to timber joint with timber splice plate adopted

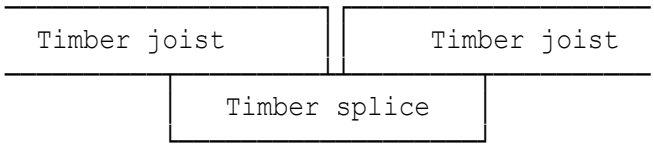

Plan view on splice

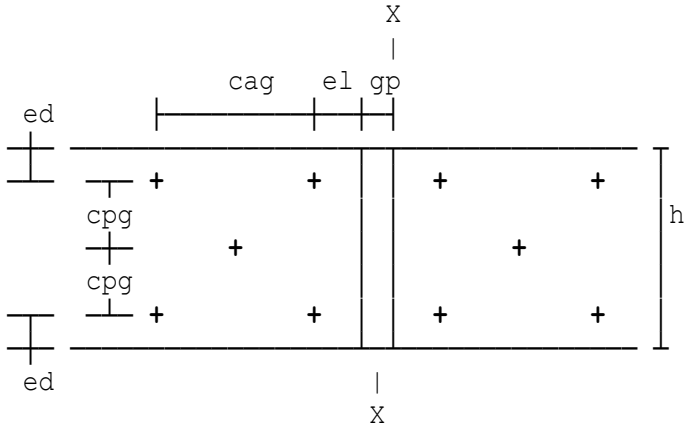

Five bolt symmetrical joint with in line splice plate to EC5

```
Design shear to be resisted       Fd'=3.15 kN
Design moment to be resisted      Md=1.12 kNm
Depth of timber section           h=300 mm
Thickness of member 1             t1=50 mm
Timber strength class C22.
Timber characteristic density     pk1=340 kg/m³
Thickness of timber splice plate  t2=50 mm
Timber strength class C22.
Timber characteristic density     pk2=340 kg/m³
Gap distance between joists       gp=0 mm
Fixing diameter (8 mm to 30 mm)   bd=16 mm
Depth factor (Clause 3.2)         kh=1.0
Actual edge distance to bolt ctr  ed=65 mm
Actual end distance               el=125 mm
Actual centres of bolts // grain  cag=100 mm
Basic loads in kN will be derived from the expressions in Section 8
of Eurocode 5.
Char fastener yield moment        MyRk=0.3*400*bd^2.6=162141 Nmm
Fixing spacing // to the grain    alphapar=100 mm
Char embedment strength           fhok1=0.082*(1-0.01*bd)*pk1=23.419
Embedding strength (Timb 1)       fh1k=fhok1/denom1=18.795 N/mm²
Char embedment strength           fhok2=0.082*(1-0.01*bd)*pk2=23.419
compute (expression 8.31)     denom2=((K90*SIN(alpha)^2)+COS(alpha)^2)
                                  =1.246
Embedding strength (Timb 2)       fh2k=fhok2/denom2=18.795 N/mm²
Factor                            beta=fh2k/fh1k=1
Equations  a        b        c         d         e         f
Min value of equations (a)-(f)    Gmin=6228.3
Char bolt shear resistance        basic=Gmin/1000=6.2283 kN
Design resistance per bolt        pbl=kmod/gamM*basic=3.8328 kN

Total No of bolts at joint        n=5
```

Number of bolts per row	nfpr=2
Spacing between bolts // grain	a1=100 mm
EC5 effect No fasteners per row	nef=nfpr^0.9*(a1/(13*bd))^0.25=1.5539
TRADA effect No of bolts per row	nef=(nfpr)^0.8=1.7411
Effective No of bolts to be adopted	nef=1.7411
Effective bolt design capacity	Fvef=pbl*nef/nfpr=3.3366 kN
Load-sharing modification factor	ksys=1.1
Design bending strength	fmd=kh*ksys*fmk*kmod/gamM=14.892 N/mm²
Design shear strength	fvd=ksys*fvk*kmod/gamM=2.5723 N/mm²

Check splitting capacity of the connection

Design resultant force	RF=3.2051 kN
Tension force component ⊥ grain	FvEd=RF*SIN(alpha)=2.0696 kN
Loaded edge distance	he=235 mm
Design splitting capacity	F90Rd=F90Rk*kmod/gamM=14.187 kN

DESIGN SUMMARY

Bolt summary:

Max resultant force	**3.2051 kN**
Angle to grain	**40.22 degrees**
Effect bolt design capacity	**3.8328 kN**

Timber splice plate summary:

Combined bend moment	**1.6713 kNm**
Design bend stress	**2.2283 N/mm²**
Design bend strength	**14.892 N/mm²**
Design shear stress	**0.35526 N/mm²**
Design shear strength	**2.5723 N/mm²**

Location: Ex8 - Timber splice plate

Timber to timber joint with timber splice plates

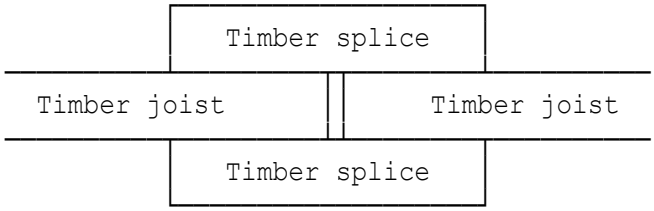

Plan view on splice

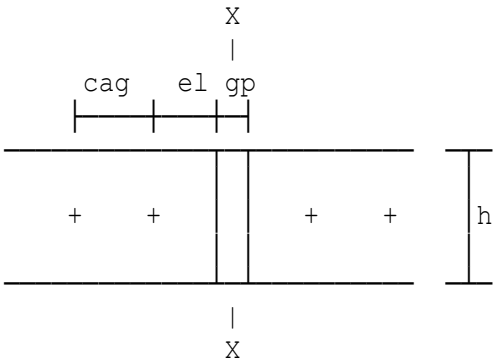

Two bolt symmetrical joint with in line splice plate to EC5

Design shear to be resisted Fd'=0.49 kN
Design moment to be resisted Md=0.21 kNm
Depth of timber section h=200 mm
Thickness of member 1 t1=47 mm
Timber strength class C22.
Timber characteristic density pk1=340 kg/m³
Thickness of timber splice plate t2=47 mm
Timber strength class C22.
Timber characteristic density pk2=340 kg/m³
Gap distance between joists gp=5 mm
Fixing diameter (8 mm to 30 mm) bd=16 mm
Depth factor (Clause 3.2) kh=1.0
Actual end distance el=100 mm
Actual centres of bolts // grain cag=150 mm

Basic loads in kN will be derived from the expressions in Section 8 of Eurocode 5.
Char fastener yield moment MyRk=0.3*400*bd^2.6=162141 Nmm
Fixing spacing // to the grain alphapar=112 mm
Char embedment strength fhok1=0.082*(1-0.01*bd)*pk1=23.419
Embedding strength (Timb 1) fh1k=fhok1/denom1=14.729 N/mm²
Char embedment strength fhok2=0.082*(1-0.01*bd)*pk2=23.419
compute (expression 8.31) denom2=((K90*SIN(alpha)^2)+COS(alpha)^2)
=1.59
Embedding strength (Timb 2) fh2k=fhok2/denom2=14.729 N/mm²
Factor beta=fh2k/fh1k=1
Expressions (g)-(k) for fasteners in double shear, refer to section 8.2.2 in EC5. Zero contribution from rope effect will be considered.

Equations	g	h	j	k
	11076	5538.1	6906.9	10053

Min value of equations (g)-(k) Gmin=5538.1
Char bolt shear resistance basic=Gmin/1000=5.5381 kN

Fasteners are in double shear hence two shear planes per fastener will be utilized in the following calculation:

Design resistance per bolt	pbl=kmod*2/gamM*basic=6.8162 kN
Load-sharing modification factor	ksys=1.1
Design bending strength	fmd=kh*ksys*fmk*kmod/gamM=14.892 N/mm²
Design shear strength	fvd=ksys*fvk*kmod/gamM=2.5723 N/mm²

Check splitting capacity of the connection

Design resultant force	RF=1.645 kN
Tension force component ⊥ grain	FvEd=RF*SIN(alpha)=1.645 kN
Loaded edge distance	he=100 mm
Design splitting capacity	F90Rd=F90Rk*kmod/gamM=5.7265 kN

DESIGN SUMMARY

Bolt summary:	
Max resultant force	**1.645 kN**
Angle to grain	**90 degrees**
Design capacity per bolt	**6.8162 kN**
Timber splice plate summary:	
Combined bend moment	**0.14849 kNm**
Design bend stress	**0.4739 N/mm²**
Design bend strength	**14.892 N/mm²**
Design shear stress	**0.042962 N/mm²**
Design shear strength	**2.5723 N/mm²**

Location: Ex9 - Steel splice plate

Timber to timber joint with steel splice plates

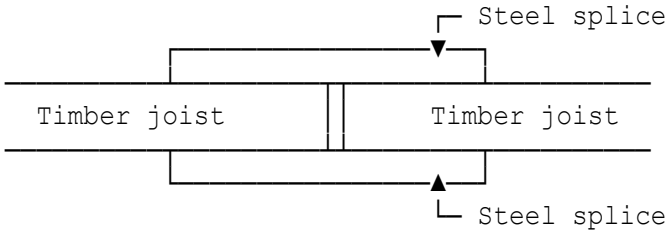

Plan view on splice

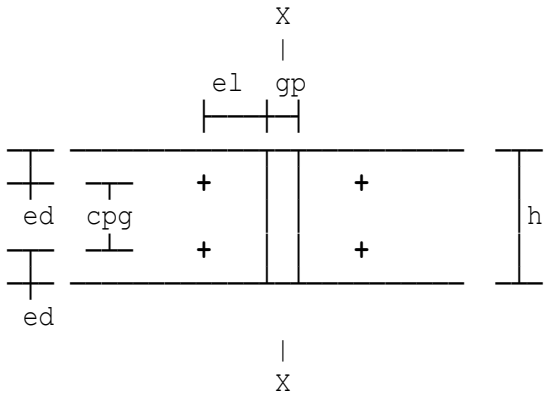

Two bolt symmetrical joint with in line splice plate to EC5

```
Design shear to be resisted       Fd'=0.49 kN
Design moment to be resisted      Md=0.21 kNm
Depth of timber section           h=200 mm
Thickness of member 1             t1=47 mm
Timber strength class C22.
Timber characteristic density     pk1=340 kg/m³
Thickness of steel splice plate   st=10 mm
Gap distance between joists       gp=0 mm
Fixing diameter (8 mm to 30 mm)   bd=16 mm
Depth factor (Clause 3.2)         kh=1.0
Actual edge distance to bolt ctr  ed=64 mm
Actual end distance               el=112 mm
Basic loads in kN will be derived from the expressions in Section 8
of Eurocode 5.
Char fastener yield moment        MyRk=0.3*400*bd^2.6=162141 Nmm
Char embedment strength           fhok1=0.082*(1-0.01*bd)*pk1=23.419
Embedding strength (Timb 1)       fh1k=fhok1/denom1=23.323 N/mm²
Adopt timber embedment strength   fh2k=fh1k=23.323 N/mm²
Equations      j         k         l        m
              8769.4    12651     8769.4   17891
Min value of equations (j)-(m)    Gmin=8769.4
Char bolt shear resistance        basic=Gmin/1000=8.7694 kN
Chosen joint type has a steel splice plate.
Fasteners are in double shear hence two shear planes per fastener
will be utilized in the following calculation:
Design resistance per bolt        pbl=kmod*2/gamM*basic=10.793 kN
```

Check splitting capacity of the connection

Design resultant force	RF=2.9269 kN
Tension force component ⊥ grain	FvEd=RF*SIN(alpha)=0.245 kN
Loaded edge distance	he=100 mm
Design splitting capacity	F90Rd=F90Rk*kmod/gamM=5.7265 kN

DESIGN SUMMARY

Bolt summary:	
Max resultant force	**2.9269 kN**
Angle to grain	**4.8016 degrees**
Effect bolt design capacity	**10.793 kN**
Steel splice plate summary:	
Combined bend moment	**0.13244 kNm**
Design bend stress	**1.9866 N/mm²**
Design bend strength	**275 N/mm²**
Design shear stress	**0.14759 N/mm²**
Design shear strength	**255 N/mm²**

Location: Ex10 - Timber overlap splice

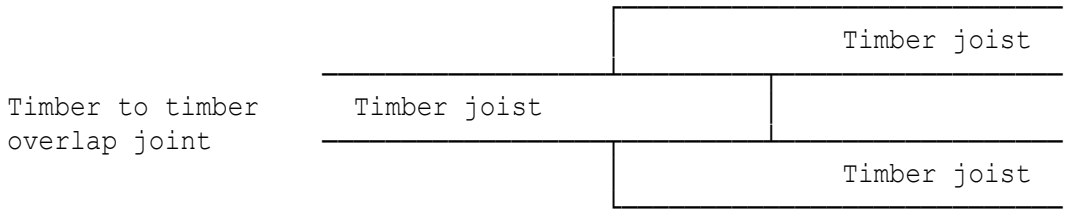

Plan view on splice

Total number of bolts nbolt=3

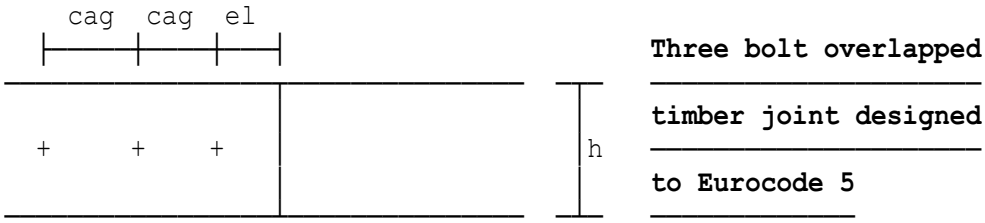

Three bolt overlapped timber joint designed to Eurocode 5

Design shear to be resisted Fd'=2.8 kN
Design moment to be resisted Md=0.35 kNm
Depth of timber section h=200 mm
Thickness of member 1 t1=75 mm
Timber strength class C22.
Timber characteristic density pk1=340 kg/m³
Thickness of member 2 t2=75 mm
Timber strength class C22.
Timber characteristic density pk2=340 kg/m³
Fixing diameter (8 mm to 30 mm) bd=16 mm
Depth factor (Clause 3.2) kh=1.0
Actual end distance el=125 mm
Actual centres of bolts // grain cag=150 mm

Basic loads in kN will be derived from the expressions in Section 8 of Eurocode 5.
Char fastener yield moment MyRk=0.3*400*bd^2.6=162141 Nmm
Fixing spacing // to the grain alphapar=100 mm
Char embedment strength fhok1=0.082*(1-0.01*bd)*pk1=23.419
Embedding strength (Timb 1) fh1k=fhok1/denom1=14.729 N/mm²
Char embedment strength fhok2=0.082*(1-0.01*bd)*pk2=23.419
compute (expression 8.31) denom2=((K90*SIN(alpha)^2)+COS(alpha)^2)
=1.59
Embedding strength (Timb 2) fh2k=fhok2/denom2=14.729 N/mm²
Factor beta=fh2k/fh1k=1
Expressions (g)-(k) for fasteners in double shear, refer to section 8.2.2 in EC5. Zero contribution from rope effect will be considered.

Equations	g	h	j	k
	17675	8837.4	8279.2	10053

Min value of equations (g)-(k) Gmin=8279.2
Char bolt shear resistance basic=Gmin/1000=8.2792 kN
Fasteners are in double shear hence two shear planes per fastener will be utilized in the following calculation:
Design resistance per bolt pbl=kmod*2/gamM*basic=10.19 kN

Check splitting capacity of the connection

Design resultant force	RF=2.1 kN
Tension force component ⊥ grain	FvEd=RF*SIN(alpha)=2.1 kN
Loaded edge distance	he=100 mm
Design splitting capacity	F90Rd=F90Rk*kmod/gamM=9.138 kN

	Bolt summary:	
DESIGN	**Max resultant force**	**2.1 kN**
SUMMARY	**Angle to grain**	**90 degrees**
	Design capacity per bolt	**10.19 kN**

Location: Ex11 - Timber splice plate

Timber to timber joint with timber splice plates

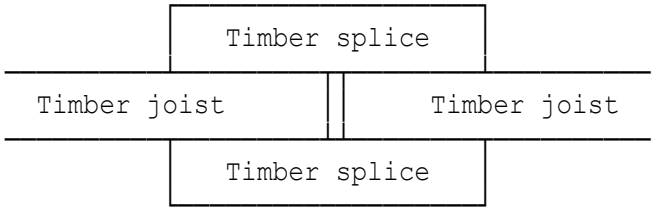

Plan view on splice

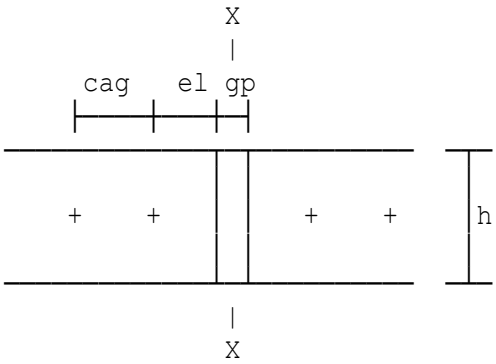

Two bolt symmetrical joint with in line splice plate to EC5

Design shear to be resisted Fd'=0.49 kN
Design moment to be resisted Md=0.21 kNm
Depth of timber section h=200 mm
Thickness of member 1 t1=47 mm
Timber strength class C22.
Timber characteristic density pk1=340 kg/m³
Thickness of timber splice plate t2=47 mm
Timber strength class C22.
Timber characteristic density pk2=340 kg/m³
Gap distance between joists gp=5 mm
Fixing diameter (10 mm or 12 mm) bd=12 mm
Depth factor (Clause 3.2) kh=1.0
Actual end distance el=100 mm
Actual centres of bolts // grain cag=150 mm

Basic loads in kN will be derived from the expressions in Section 8 of Eurocode 5.
Char fastener yield moment MyRk=0.3*400*bd^2.6=76745 Nmm
Fixing spacing // to the grain alphapar=84 mm
Char embedment strength fhok1=0.082*(1-0.01*bd)*pk1=24.534
Embedding strength (Timb 1) fh1k=fhok1/denom1=16.036 N/mm²
Char embedment strength fhok2=0.082*(1-0.01*bd)*pk2=24.534
compute (expression 8.31) denom2=((K90*SIN(alpha)^2)+COS(alpha)^2)
=1.53
Embedding strength (Timb 2) fh2k=fhok2/denom2=16.036 N/mm²
Factor beta=fh2k/fh1k=1
Expressions (g)-(k) for fasteners in double shear, refer to section 8.2.2 in EC5. Zero contribution from rope effect will be considered.

Equations	g	h	j	k
	9044.1	4522	4695.1	6249.9

Min value of equations (g)-(k) Gmin=4522
Char bolt shear resistance basic=Gmin/1000=4.522 kN

Fasteners are in double shear hence two shear planes per fastener will be utilized in the following calculation:
Design resistance per bolt pbl=kmod*2/gamM*basic=5.5656 kN

Toothed-plate connector assembly

Toothed-plate connectors should comply with BS EN 912 and BS EN 14545.
Connector nominal diameter dc=50 mm

Design shear capacity for one toothed-plate connector unit

Thickness of metal in connector tmet=0.9 mm
Toothed-plate connector height hc=15 mm
Material factor for connection gamM=1.3
Design capacity of one TPC unit FvRd=interf*kmod*FvRk/(1000*gamM)
=3.8044 kN

Combined design resistance per fixing

Combined design resistance pbl=pbl1+pbl2=9.37 kN

Load-sharing modification factor ksys=1.1
Design bending strength fmd=kh*ksys*fmk*kmod/gamM=14.892 N/mm²
Design shear strength fvd=ksys*fvk*kmod/gamM=2.5723 N/mm²

Check splitting capacity of the connection

Design resultant force RF=1.645 kN
Tension force component ⊥ grain FvEd=RF*SIN(alpha)=1.645 kN
Loaded edge distance he=100 mm
Design splitting capacity F90Rd=F90Rk*kmod/gamM=5.7265 kN

Minimum spacings for toothed-plate connectors - to EC5 Table 8.8

Spacing within one row parallel to grain:
a1=(1.2+0.3*COS(alpha))*dc=60 mm
Spacing between connector rows perpendicular to grain:
a2=1.2*dc=60 mm
End distance (loaded) a3t=1.5*dc=75 mm
End distance (unloaded) a3c=(0.9+0.6*SIN(alpha))*dc=75 mm
Edge distance (loaded) a4t=(0.6+0.2*SIN(alpha))*dc=40 mm
Edge distance (unloaded) a4c=0.6*dc=30 mm

Joint slip check - to EC5 Section 7

Stiffness of joint final condition at the SLS:
Kserfj=Kserj/(1+2*kdef)=2897.7 N
Final deflection of the joint at SLS:
utser=Fdsls/Kserfj+2=2.1183 mm

DESIGN SUMMARY

Bolt/toothed-plate connector summary:	
Max resultant force	**1.645 kN**
Angle to grain	**90 degrees**
Design capacity per bolt	**9.37 kN**
Timber splice plate summary:	
Combined bend moment	**0.14849 kNm**
Design bend stress	**0.4739 N/mm²**
Design bend strength	**14.892 N/mm²**
Design shear stress	**0.042038 N/mm²**
Design shear strength	**2.5723 N/mm²**

Toothed-plate connectors of nominal diameter 50 mm need to be provided with each 12 mm diameter bolt. Toothed-plate connectors should comply with BS EN 912 and BS EN 14545.

Location: Ex12 - Bolted timber connection

Timber to timber joint
with timber splice
plate adopted

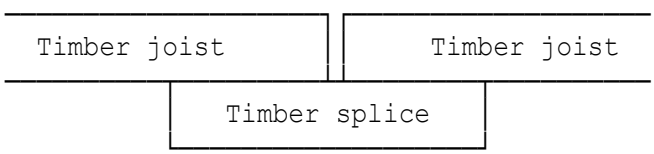

Plan view on splice

Total number of bolts nbolt=4

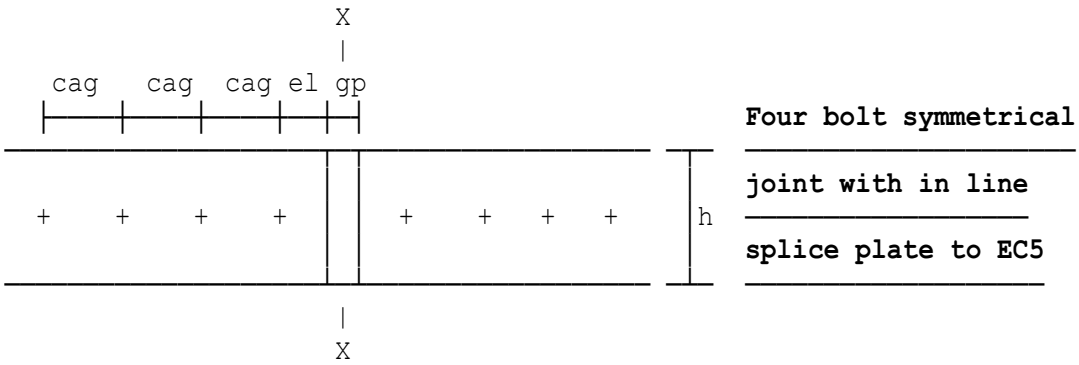

Four bolt symmetrical joint with in line splice plate to EC5

Design shear to be resisted Fd'=1.61 kN
Design moment to be resisted Md=0.49 kNm
Depth of timber section h=300 mm
Thickness of member 1 t1=47 mm
Timber strength class C22.
Timber characteristic density pk1=340 kg/m³
Thickness of timber splice plate t2=63 mm
Timber strength class C22.
Timber characteristic density pk2=340 kg/m³
Gap distance between joists gp=10 mm
Fixing diameter (8 mm to 30 mm) bd=16 mm
Depth factor (Clause 3.2) kh=1.0
Actual end distance el=125 mm
Actual centres of bolts // grain cag=80 mm

Basic loads in kN will be derived from the expressions in Section 8 of Eurocode 5.
Char fastener yield moment MyRk=0.3*400*bd^2.6=162141 Nmm
Fixing spacing // to the grain alphapar=80 mm
Char embedment strength fhok1=0.082*(1-0.01*bd)*pk1=23.419
Embedding strength (Timb 1) fh1k=fhok1/denom1=14.729 N/mm²
Char embedment strength fhok2=0.082*(1-0.01*bd)*pk2=23.419
compute (expression 8.31) denom2=((K90*SIN(alpha)^2)+COS(alpha)^2)
=1.59
Embedding strength (Timb 2) fh2k=fhok2/denom2=14.729 N/mm²
Factor beta=fh2k/fh1k=1
Equations a b c d e f
Min value of equations (a)-(f) Gmin=5465.6
Char bolt shear resistance basic=Gmin/1000=5.4656 kN
Design resistance per bolt pbl=kmod/gamM*basic=3.3634 kN

Load-sharing modification factor	ksys=1.1
Design bending strength	fmd=kh*ksys*fmk*kmod/gamM=14.892 N/mm²
Design shear strength	fvd=ksys*fvk*kmod/gamM=2.5723 N/mm²

Check splitting capacity of the connection

Design resultant force	RF=2.4442 kN
Tension force component ⊥ grain	FvEd=RF*SIN(alpha)=2.4442 kN
Loaded edge distance	he=235 mm
Design splitting capacity	F90Rd=F90Rk*kmod/gamM=13.336 kN

DESIGN SUMMARY

Bolt summary:	
Max resultant force	**2.4442 kN**
Angle to grain	**90 degrees**
Design capacity per bolt	**3.3634 kN**
Timber splice plate summary:	
Combined bend moment	**0.8281 kNm**
Design bend stress	**0.8763 N/mm²**
Design bend strength	**14.892 N/mm²**
Design shear stress	**0.13593 N/mm²**
Design shear strength	**2.5723 N/mm²**

Location: Ex13 - Bolted timber connection

Timber to timber joint with timber splice plates

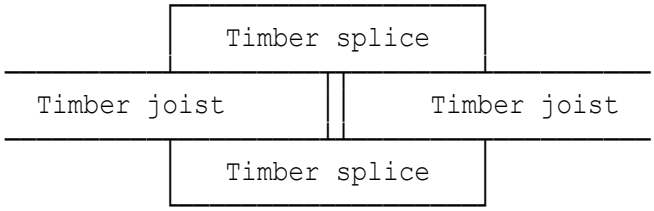

Plan view on splice

Total number of bolts nbolt=4

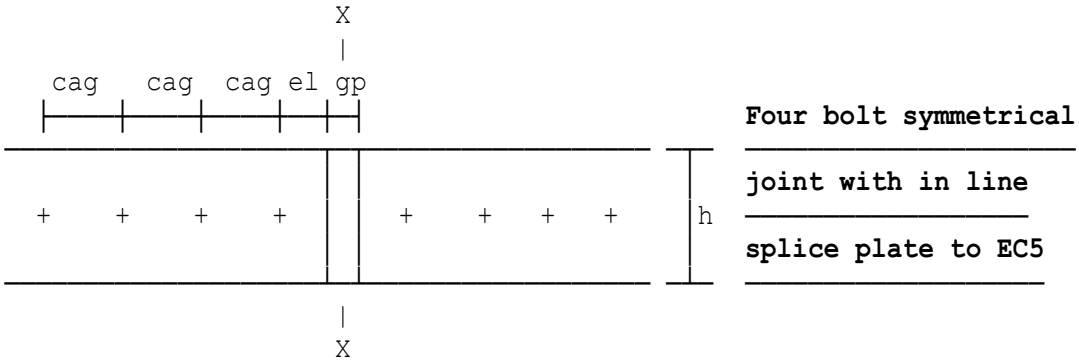

Four bolt symmetrical joint with in line splice plate to EC5

Design shear to be resisted Fd'=1.61 kN
Design moment to be resisted Md=0.49 kNm
Depth of timber section h=300 mm
Thickness of member 1 t1=47 mm
Timber strength class C22.
Timber characteristic density pk1=340 kg/m³
Thickness of timber splice plate t2=63 mm
Timber strength class C22.
Timber characteristic density pk2=340 kg/m³
Gap distance between joists gp=10 mm
Fixing diameter (8 mm to 30 mm) bd=16 mm
Depth factor (Clause 3.2) kh=1.0
Actual end distance el=125 mm
Actual centres of bolts // grain cag=80 mm

Basic loads in kN will be derived from the expressions in Section 8 of Eurocode 5.
Char fastener yield moment MyRk=0.3*400*bd^2.6=162141 Nmm
Fixing spacing // to the grain alphapar=80 mm
Char embedment strength fhok1=0.082*(1-0.01*bd)*pk1=23.419
Embedding strength (Timb 1) fh1k=fhok1/denom1=14.729 N/mm²
Char embedment strength fhok2=0.082*(1-0.01*bd)*pk2=23.419
compute (expression 8.31) denom2=((K90*SIN(alpha)^2)+COS(alpha)^2)
=1.59
Embedding strength (Timb 2) fh2k=fhok2/denom2=14.729 N/mm²
Factor beta=fh2k/fh1k=1

Equations	g	h	j	k
	11076	7423.4	6906.9	10053

Min value of equations (g)-(k) Gmin=6906.9
Char bolt shear resistance basic=Gmin/1000=6.9069 kN

Fasteners are in double shear hence two shear planes per fastener will be utilized in the following calculation:

Design resistance per bolt	pbl=kmod*2/gamM*basic=8.5008 kN
Load-sharing modification factor	ksys=1.1
Design bending strength	fmd=kh*ksys*fmk*kmod/gamM=14.892 N/mm²
Design shear strength	fvd=ksys*fvk*kmod/gamM=2.5723 N/mm²

Check splitting capacity of the connection

Design resultant force	RF=2.4442 kN
Tension force component ⊥ grain	FvEd=RF*SIN(alpha)=2.4442 kN
Loaded edge distance	he=235 mm
Design splitting capacity	F90Rd=F90Rk*kmod/gamM=13.336 kN

DESIGN SUMMARY

Bolt summary:	
Max resultant force	**2.4442 kN**
Angle to grain	**90 degrees**
Design capacity per bolt	**8.5008 kN**
Timber splice plate summary:	
Combined bend moment	**0.41405 kNm**
Design bend stress	**0.43815 N/mm²**
Design bend strength	**14.892 N/mm²**
Design shear stress	**0.067967 N/mm²**
Design shear strength	**2.5723 N/mm²**

Location: Ex14 - Bolted timber connection

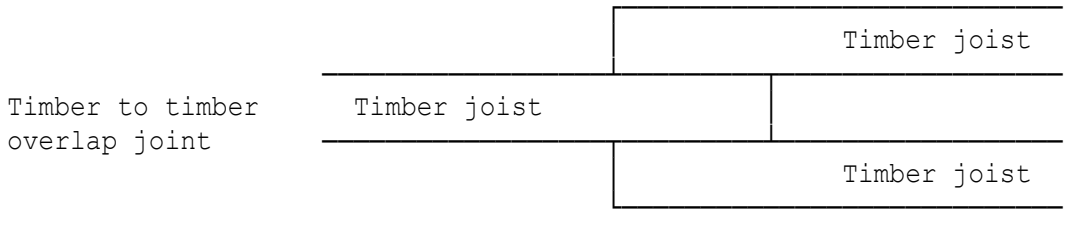

Plan view on splice

Total number of bolts nbolt=5

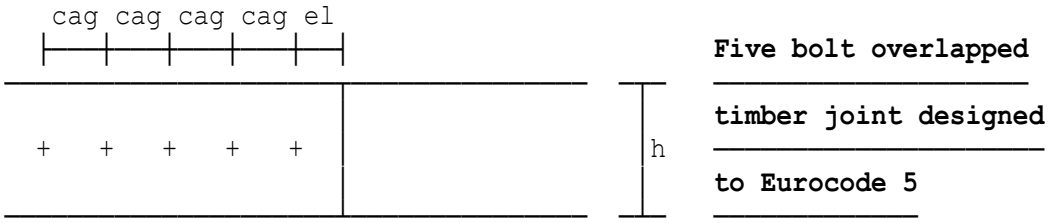

Design shear to be resisted Fd'=1.61 kN
Design moment to be resisted Md=0.49 kNm
Depth of timber section h=300 mm
Thickness of member 1 t1=47 mm
Timber strength class C22.
Timber characteristic density pk1=340 kg/m³
Thickness of member 2 t2=63 mm
Timber strength class C22.
Timber characteristic density pk2=340 kg/m³
Fixing diameter (8 mm to 30 mm) bd=16 mm
Depth factor (Clause 3.2) kh=1.0
Actual end distance el=125 mm
Actual centres of bolts // grain cag=80 mm

Basic loads in kN will be derived from the expressions in Section 8
of Eurocode 5.
Char fastener yield moment MyRk=0.3*400*bd^2.6=162141 Nmm
Fixing spacing // to the grain alphapar=80 mm
Char embedment strength fhok1=0.082*(1-0.01*bd)*pk1=23.419
Embedding strength (Timb 1) fh1k=fhok1/denom1=14.729 N/mm²
Char embedment strength fhok2=0.082*(1-0.01*bd)*pk2=23.419
compute (expression 8.31) denom2=((K90*SIN(alpha)^2)+COS(alpha)^2)
=1.59
Embedding strength (Timb 2) fh2k=fhok2/denom2=14.729 N/mm²
Factor beta=fh2k/fh1k=1

Equations	g	h	j	k
	11076	7423.4	6906.9	10053

Min value of equations (g)-(k) Gmin=6906.9
Char bolt shear resistance basic=Gmin/1000=6.9069 kN
Fasteners are in double shear hence two shear planes per fastener
will be utilized in the following calculation:
Design resistance per bolt pbl=kmod*2/gamM*basic=8.5008 kN

Check splitting capacity of the connection

Design resultant force	RF=1.8533 kN
Tension force component ⊥ grain	FvEd=RF*SIN(alpha)=1.8533 kN
Loaded edge distance	he=235 mm
Design splitting capacity	F90Rd=F90Rk*kmod/gamM=13.336 kN

	Bolt summary:	
DESIGN	**Max resultant force**	**1.8533 kN**
SUMMARY	**Angle to grain**	**90 degrees**
	Design capacity per bolt	**8.5008 kN**

Location: Test case 1

Toothed-plate connector joint design to BS5268-2:2002

Toothed-plate connectors should comply with BS 1579. Bolts should comply with BS EN 20898-2 and washers with BS4320.

Axial load at joint	F=2.15 kN
Number of connectors in joint	ncj=2
Angle between grain and load	alpha'=45°
Thickness of thinner member	t=22 mm
Strength class C14 to Table 8.	
Mod factor for duration of load	K58=1.25
Angle of connector axis to grain	acag=30°
Actual spacing of connectors	aspace=56 mm
End grain is loaded by connector.	
Actual loaded end distance to Figure 7 BS5268-2:2002	alend=60 mm
Actual edge distance to figure 7 BS5268-2:2002	aedge=30 mm
Mod factor for No. of connectors	K61=0.97
Permissible connector load	pcl=basic*K58*K59*K60*K61=1.6643 kN
Actual load per connector	Fa=F/(ncj*interf)=1.075 kN

Since pcl > Fa (1.6643 kN > 1.075 kN) then connector capacity exceeds the applied load and the joint is satisfactory.

	Actual load per connector	**1.075 kN**
DESIGN	**Permissible connector load**	**1.6643 kN**
SUMMARY	**Number of connectors in joint**	**2**
	Number of bolts in joint	**2**
	Provide toothed-plate connector on one side of the timber only	

Location: Test case 2

Toothed-plate connector joint design to BS5268-2:2002

Toothed-plate connectors should comply with BS 1579. Bolts should comply with BS EN 20898-2 and washers with BS4320.

Axial load at joint	F=1.55 kN
Number of connectors in joint	ncj=2
Angle between grain and load	alpha'=90°
Thickness of thinner member	t=60 mm
Strength class C16 to Table 8.	
Mod factor for duration of load	K58=1
Angle of connector axis to grain	acag=45°
Actual spacing of connectors	aspace=70 mm
End grain is loaded by connector.	
Actual loaded end distance to Figure 7 BS5268-2:2002	alend=50 mm
Actual edge distance to figure 7 BS5268-2:2002	aedge=35 mm
Mod factor for No. of connectors	K61=0.97
Permissible connector load	pcl=basic*K58*K59*K60*K61=1.1935 kN
Actual load per connector	Fa=F/(ncj*interf)=0.3875 kN

Since pcl > Fa (1.1935 kN > 0.3875 kN) then connector capacity exceeds the applied load and the joint is satisfactory.

	Actual load per connector	**0.3875 kN**
DESIGN	**Permissible connector load**	**1.1935 kN**
SUMMARY	**Number of connectors in joint**	**2**
	Number of bolts in joint	**2**
	Provide toothed-plate connectors on both sides of timber & on same bolt	

Location: Test case 3

Toothed-plate connector joint design to BS5268-2:2002

Toothed-plate connectors should comply with BS 1579. Bolts should comply with BS EN 20898-2 and washers with BS4320.

Axial load at joint	F=3.55 kN
Number of connectors in joint	ncj=1
Angle between grain and load	alpha'=0°
Thickness of thinner member	t=29 mm
Strength class C24 to Table 8.	
Mod factor for duration of load	K58=1.25
End grain is not loaded by connector.	
Actual unloaded end distance to Figure 7 BS5268-2:2002	auend=44 mm
Actual edge distance to figure 7 BS5268-2:2002	aedge=38 mm
Permissible connector load	pcl=basic*K58*K59*K60*K61=5.5 kN
Actual load per connector	Fa=F/(ncj*interf)=3.55 kN

Since pcl > Fa (5.5 kN > 3.55 kN) then connector capacity exceeds the applied load and the joint is satisfactory.

	Actual load per connector	**3.55 kN**
DESIGN	**Permissible connector load**	**5.5 kN**
SUMMARY	**Number of connectors in joint**	**1**
	Number of bolts in joint	**1**
	Provide toothed-plate connector on one side of the timber only	

Location: Test case 4

Toothed-plate connector joint design to BS5268-2:2002

Toothed-plate connectors should comply with BS 1579. Bolts should comply with BS EN 20898-2 and washers with BS4320.

Axial load at joint	F=5.25 kN
Number of connectors in joint	ncj=2
Angle between grain and load	alpha'=45°
Thickness of thinner member	t=63 mm
Strength class C40 to Table 8.	
Mod factor for duration of load	K58=1
Angle of connector axis to grain	acag=0°
Actual spacing of connectors	aspace=95 mm
End grain is loaded by connector.	
Actual loaded end distance to Figure 7 BS5268-2:2002	alend=80 mm
Actual edge distance to figure 7 BS5268-2:2002	aedge=45 mm
Mod factor for No. of connectors	K61=0.97
Permissible connector load	pcl=basic*K58*K59*K60*K61=2.8165 kN
Actual load per connector	Fa=F/(ncj*interf)=1.3125 kN

Since pcl > Fa (2.8165 kN > 1.3125 kN) then connector capacity exceeds the applied load and the joint is satisfactory.

	Actual load per connector	**1.3125 kN**
DESIGN	**Permissible connector load**	**2.8165 kN**
SUMMARY	**Number of connectors in joint**	**2**
	Number of bolts in joint	**2**
	Provide toothed-plate connectors on both sides of timber & on same bolt	

Location: Test case 5

Toothed-plate connector joint design to BS5268-2:2002

Toothed-plate connectors should comply with BS 1579. Bolts should comply with BS EN 20898-2 and washers with BS4320.

Axial load at joint	F=4.95 kN
Number of connectors in joint	ncj=5
Angle between grain and load	alpha'=37.5°
Thickness of thinner member	t=47 mm
Strength class C22 to Table 8.	
Mod factor for duration of load	K58=1
Angle of connector axis to grain	acag=12°
Actual spacing of connectors	aspace=62.533 mm
End grain is loaded by connector.	
Actual loaded end distance to Figure 7 BS5268-2:2002	alend=60 mm
Actual edge distance to figure 7 BS5268-2:2002	aedge=35 mm
Mod factor for No. of connectors	K61=0.88
Permissible connector load	pcl=basic*K58*K59*K60*K61=0.99632 kN
Actual load per connector	Fa=F/(ncj*interf)=0.99 kN

Since pcl > Fa (0.99632 kN > 0.99 kN) then connector capacity exceeds the applied load and the joint is satisfactory.

	Actual load per connector	**0.99 kN**
DESIGN	**Permissible connector load**	**0.99632 kN**
SUMMARY	**Number of connectors in joint**	**5**
	Number of bolts in joint	**5**
	Provide toothed-plate connector on one side of the timber only	

Location: Test case 6

Toothed-plate connector joint design to BS5268-2:2002

Toothed-plate connectors should comply with BS 1579. Bolts should comply with BS EN 20898-2 and washers with BS4320.

Axial load at joint	F=3.2 kN
Number of connectors in joint	ncj=1
Angle between grain and load	alpha'=90°
Thickness of thinner member	t=50 mm

Strength class C16 to Table 8.

Mod factor for duration of load	K58=1

End grain is not loaded by connector.

Actual unloaded end distance to Figure 7 BS5268-2:2002	auend=102 mm
Actual edge distance to figure 7 BS5268-2:2002	aedge=44 mm
Permissible connector load	pcl=basic*K58*K59*K60*K61=3.13 kN
Actual load per connector	Fa=F/(ncj*interf)=1.6 kN

Since pcl > Fa (3.13 kN > 1.6 kN) then connector capacity exceeds the applied load and the joint is satisfactory.

	Actual load per connector	**1.6 kN**
DESIGN	**Permissible connector load**	**3.13 kN**
SUMMARY	**Number of connectors in joint**	**1**
	Number of bolts in joint	**1**
	Provide toothed-plate connectors on both sides of timber & on same bolt	

Location: Test case 1

Toothed-plate connector joint design to EC5

Toothed-plate connectors should comply with BS EN 912 & BS EN 14545 and be used in conjunction with connector bolts having a min tensile strength of 400 N/mm². Bolts should comply with BS EN 20898-2. Washers should have a minimum thickness of 0.3d and a minimum diameter or side length of 3d, where d is the bolt diameter. Washers need to be used under both the head and nut. Bolt holes in timber should have a diameter not more than 1.0 mm larger than the bolt diameter.

Characteristic permanent load	Gk=1.075 kN
Characteristic variable load	Qk=1.075 kN
Design axial load at joint	Fd=1.35*Gk+1.5*Qk=3.0638 kN
Number of bolts to be used	nbolt=2
Angle between grain and load	alpha'=45°
Connector nominal diameter	dc=38 mm
Timber strength class C14.	
Thickness of thinner member	t1=22 mm
Thickness of other member	t2=22 mm
Thickness of metal in connector	tmet=0.9 mm
Height of toothed-plate connector	hc=12 mm
Material factor for connection	gamM=1.3
Design capacity of joint	FvRd=interf*ncj*kmod*FvRk/(1000 *gamM)=3.835 kN
Design load at joint	Fd=3.0638 kN

Since FvRd ≥ Fd (3.835 kN ≥ 3.0638 kN) design capacity of joint exceeds the design load at joint hence connection is satisfactory.

Minimum toothed-plate connector spacings - EC5 Table 8.8

Spacing within one row parallel to grain:	a1=(1.2+0.3*COS(alpha))*dc=53.661 mm
Spacing between connector rows perpendicular to grain:	a2=1.2*dc=45.6 mm
End distance (loaded)	a3t=1.5*dc=57 mm
End distance (unloaded)	a3c=(0.9+0.6*SIN(alpha))*dc=50.322 mm
Edge distance (loaded)	a4t=(0.6+0.2*SIN(alpha))*dc=28.174 mm
Edge distance (unloaded)	a4c=0.6*dc=22.8 mm
Reduction factors for distance a1	ka1=0.75
Reduction factors for distance a2	ka2=0.75

Joint slip check - EC5 Section 7

Stiffness of joint final condition at the SLS:	Kserfj=Kserj/(1+2*kdef)=3756.8 N
Final deflection of the joint at SLS:	utser=Fdsls/Kserfj+2=2.5723 mm

	Design load at joint	**3.0638 kN**
DESIGN	**Design capacity of joint**	**3.835 kN**
SUMMARY	**Number of connectors in joint**	**2**
	Number of bolts in joint	**2**
	Toothed-plate connector type	**C6**
	Provide a toothed-plate connector on one side of timber only	

The connector bolts hold the members together and are assumed not to contribute to the load-carrying capacity of the connection. Use proformas 273 and 274 to evaluate the bolt contribution.

Location: Test case 2

Toothed-plate connector joint design to EC5

Toothed-plate connectors should comply with BS EN 912 & BS EN 14545 and be used in conjunction with connector bolts having a min tensile strength of 400 N/mm². Bolts should comply with BS EN 20898-2. Washers should have a minimum thickness of 0.3d and a minimum diameter or side length of 3d, where d is the bolt diameter. Washers need to be used under both the head and nut. Bolt holes in timber should have a diameter not more than 1.0 mm larger than the bolt diameter.

Characteristic permanent load	Gk=0.775 kN
Characteristic variable load	Qk=0.775 kN
Design axial load at joint	Fd=1.35*Gk+1.5*Qk=2.2088 kN
Number of bolts to be used	nbolt=2
Angle between grain and load	alpha'=90°
Connector nominal diameter	dc=50 mm
Timber strength class C16.	
Thickness of thinner member	t1=60 mm
Thickness of other member	t2=60 mm
Thickness of metal in connector	tmet=0.9 mm
Height of toothed-plate connector	hc=15 mm
Material factor for connection	gamM=1.3
Design capacity of joint	FvRd=interf*ncj*kmod*FvRk/(1000 *gamM)=5.6367 kN
Design load at joint	Fd=2.2088 kN

Since FvRd ≥ Fd (5.6367 kN ≥ 2.2088 kN) design capacity of joint exceeds the design load at joint hence connection is satisfactory.

Minimum toothed-plate connector spacings - EC5 Table 8.8

Spacing within one row parallel to grain:	a1=(1.2+0.3*COS(alpha))*dc=60 mm
Spacing between connector rows perpendicular to grain:	a2=1.2*dc=60 mm
End distance (loaded)	a3t=1.5*dc=75 mm
End distance (unloaded)	a3c=(0.9+0.6*SIN(alpha))*dc=75 mm
Edge distance (loaded)	a4t=(0.6+0.2*SIN(alpha))*dc=40 mm
Edge distance (unloaded)	a4c=0.6*dc=30 mm

Joint slip check - EC5 Section 7

Stiffness of joint final condition at the SLS:	Kserfj=Kserj/(1+2*kdef)=2325 N
Final deflection of the joint at SLS:	utser=Fdsls/Kserfj+2=2.6667 mm

	Design load at joint	**2.2088 kN**
DESIGN	**Design capacity of joint**	**5.6367 kN**
SUMMARY	**Number of connectors in joint**	**2**
	Number of bolts in joint	**2**
	Toothed-plate connector type	**C6**
	Provide a toothed-plate connector on one side of timber only	

The connector bolts hold the members together and are assumed not to contribute to the load-carrying capacity of the connection. Use proformas 273 and 274 to evaluate the bolt contribution.

Location: Test case 3

Toothed-plate connector joint design to EC5

Toothed-plate connectors should comply with BS EN 912 & BS EN 14545 and be used in conjunction with connector bolts having a min tensile strength of 400 N/mm². Bolts should comply with BS EN 20898-2. Washers should have a minimum thickness of 0.3d and a minimum diameter or side length of 3d, where d is the bolt diameter. Washers need to be used under both the head and nut. Bolt holes in timber should have a diameter not more than 1.0 mm larger than the bolt diameter.

Characteristic permanent load	Gk=3 kN
Characteristic variable load	Qk=0.55 kN
Design axial load at joint	Fd=1.35*Gk+1.5*Qk=4.875 kN
Number of bolts to be used	nbolt=1
Angle between grain and load	alpha'=0°
Connector nominal diameter	dc=63 mm
Timber strength class C24.	
Thickness of thinner member	t1=29 mm
Thickness of other member	t2=29 mm
Thickness of metal in connector	tmet=1.2 mm
Height of toothed-plate connector	hc=10 mm
Material factor for connection	gamM=1.3
Design capacity of joint	FvRd=interf*ncj*kmod*FvRk/(1000 *gamM)=5.539 kN
Design load at joint	Fd=4.875 kN

Since FvRd ≥ Fd (5.539 kN ≥ 4.875 kN) design capacity of joint exceeds the design load at joint hence connection is satisfactory.

Minimum toothed-plate connector spacings - EC5 Table 8.8

Spacing within one row parallel to grain:	a1=(1.2+0.3*COS(alpha))*dc=94.5 mm
Spacing between connector rows perpendicular to grain:	a2=1.2*dc=75.6 mm
End distance (loaded)	a3t=1.5*dc=94.5 mm
End distance (unloaded)	a3c=1.2*dc=75.6 mm
Edge distance (loaded)	a4t=(0.6+0.2*SIN(alpha))*dc=37.8 mm
Edge distance (unloaded)	a4c=0.6*dc=37.8 mm

Joint slip check - EC5 Section 7

Stiffness of joint final condition at the SLS:	Kserfj=Kserj/(1+2*kdef)=3180.3 N
Final deflection of the joint at SLS:	utser=Fdsls/Kserfj+2=3.1163 mm

	Design load at joint	**4.875 kN**
DESIGN	**Design capacity of joint**	**5.539 kN**
SUMMARY	**Number of connectors in joint**	**1**
	Number of bolts in joint	**1**
	Toothed-plate connector type	**C6**
	Provide a toothed-plate connector on one side of timber only	

The connector bolts hold the members together and are assumed not to contribute to the load-carrying capacity of the connection. Use proformas 273 and 274 to evaluate the bolt contribution.

Location: Test case 4

Toothed-plate connector joint design to EC5

Toothed-plate connectors should comply with BS EN 912 & BS EN 14545 and be used in conjunction with connector bolts having a min tensile strength of 400 N/mm². Bolts should comply with BS EN 20898-2. Washers should have a minimum thickness of 0.3d and a minimum diameter or side length of 3d, where d is the bolt diameter. Washers need to be used under both the head and nut. Bolt holes in timber should have a diameter not more than 1.0 mm larger than the bolt diameter.

Characteristic permanent load	Gk=2.625 kN
Characteristic variable load	Qk=2.625 kN
Design axial load at joint	Fd=1.35*Gk+1.5*Qk=7.4813 kN
Number of bolts to be used	nbolt=2
Angle between grain and load	alpha'=45°
Connector nominal diameter	dc=63 mm
Timber strength class C40.	
Thickness of thinner member	t1=63 mm
Thickness of other member	t2=63 mm
Thickness of metal in connector	tmet=1.2 mm
Height of toothed-plate connector	hc=8.7 mm
Material factor for connection	gamM=1.3
Design capacity of joint	FvRd=interf*ncj*kmod*FvRk/(1000 *gamM)=7.737 kN
Design load at joint	Fd=7.4813 kN

Since FvRd ≥ Fd (7.737 kN ≥ 7.4813 kN) design capacity of joint exceeds the design load at joint hence connection is satisfactory.

Minimum toothed-plate connector spacings - EC5 Table 8.8

Spacing within one row parallel to grain:
a1=(1.2+0.3*COS(alpha))*dc=88.964 mm
Spacing between connector rows perpendicular to grain:
a2=1.2*dc=75.6 mm

End distance (loaded)	a3t=1.5*dc=94.5 mm
End distance (unloaded)	a3c=(0.9+0.6*SIN(alpha))*dc=83.429 mm
Edge distance (loaded)	a4t=(0.6+0.2*SIN(alpha))*dc=46.71 mm
Edge distance (unloaded)	a4c=0.6*dc=37.8 mm

Joint slip check - EC5 Section 7

Stiffness of joint final condition at the SLS:
Kserfj=Kserj/(1+2*kdef)=3780 N
Final deflection of the joint at SLS:
utser=Fdsls/Kserfj+2=3.3889 mm

	Design load at joint	**7.4813 kN**
DESIGN	**Design capacity of joint**	**7.737 kN**
SUMMARY	**Number of connectors in joint**	**2**
	Number of bolts in joint	**2**
	Toothed-plate connector type	**C7**
	Provide a toothed-plate connector on one side of timber only	

The connector bolts hold the members together and are assumed not to contribute to the load-carrying capacity of the connection. Use proformas 273 and 274 to evaluate the bolt contribution.

Location: Test case 5

Toothed-plate connector joint design to EC5

Toothed-plate connectors should comply with BS EN 912 & BS EN 14545 and be used in conjunction with connector bolts having a min tensile strength of 400 N/mm². Bolts should comply with BS EN 20898-2. Washers should have a minimum thickness of 0.3d and a minimum diameter or side length of 3d, where d is the bolt diameter. Washers need to be used under both the head and nut. Bolt holes in timber should have a diameter not more than 1.0 mm larger than the bolt diameter.

Characteristic permanent load	Gk=2.475 kN
Characteristic variable load	Qk=2.475 kN
Design axial load at joint	Fd=1.35*Gk+1.5*Qk=7.0538 kN
Number of bolts to be used	nbolt=5
Angle between grain and load	alpha'=37.5°
Connector side length	dc=38 mm
Timber strength class C22.	
Thickness of thinner member	t1=47 mm
Thickness of other member	t2=47 mm
Thickness of metal in connector	tmet=1 mm
Height of toothed-plate connector	hc=11 mm
Material factor for connection	gamM=1.3
Design capacity of joint	FvRd=interf*ncj*kmod*FvRk/(1000 *gamM)=7.8769 kN
Design load at joint	Fd=7.0538 kN

Since FvRd ≥ Fd (7.8769 kN ≥ 7.0538 kN) design capacity of joint exceeds the design load at joint hence connection is satisfactory.

Minimum toothed-plate connector spacings - EC5 Table 8.8

Spacing within one row parallel to grain:	a1=(1.2+0.3*COS(alpha))*dc=54.644 mm
Spacing between connector rows perpendicular to grain:	a2=1.2*dc=45.6 mm
End distance (loaded)	a3t=1.5*dc=57 mm
End distance (unloaded)	a3c=(0.9+0.6*SIN(alpha))*dc=48.08 mm
Edge distance (loaded)	a4t=(0.6+0.2*SIN(alpha))*dc=27.427 mm
Edge distance (unloaded)	a4c=0.6*dc=22.8 mm

Joint slip check - EC5 Section 7

Stiffness of joint final condition at the SLS:	Kserfj=Kserj/(1+2*kdef)=4845 N
Final deflection of the joint at SLS:	utser=Fdsls/Kserfj+2=3.0217 mm

	Design load at joint	**7.0538 kN**
DESIGN	**Design capacity of joint**	**7.8769 kN**
SUMMARY	**Number of connectors in joint**	**5**
	Number of bolts in joint	**5**
	Toothed-plate connector type	**C8**
	Provide a toothed-plate connector on one side of timber only	

The connector bolts hold the members together and are assumed not to contribute to the load-carrying capacity of the connection. Use proformas 273 and 274 to evaluate the bolt contribution.

Location: Test case 6

Toothed-plate connector joint design to EC5

Toothed-plate connectors should comply with BS EN 912 & BS EN 14545 and be used in conjunction with connector bolts having a min tensile strength of 400 N/mm². Bolts should comply with BS EN 20898-2. Washers should have a minimum thickness of 0.3d and a minimum diameter or side length of 3d, where d is the bolt diameter. Washers need to be used under both the head and nut. Bolt holes in timber should have a diameter not more than 1.0 mm larger than the bolt diameter.

Characteristic permanent load	Gk=1.6 kN
Characteristic variable load	Qk=1.6 kN
Design axial load at joint	Fd=1.35*Gk+1.5*Qk=4.56 kN
Number of bolts to be used	nbolt=1
Angle between grain and load	alpha'=90°
Connector nominal diameter	dc=75 mm
Timber strength class C16.	
Outer member thickness	t1=50 mm
Inner member thickness	t2=50 mm
Thickness of metal in connector	tmet=1.25 mm
Height of toothed-plate connector	hc=10.4 mm
Material factor for connection	gamM=1.3
Design capacity of joint	FvRd=interf*ncj*kmod*FvRk/(1000 *gamM)=10.706 kN
Design load at joint	Fd=4.56 kN

Since FvRd ≥ Fd (10.706 kN ≥ 4.56 kN) design capacity of joint exceeds the design load at joint hence connection is satisfactory.

Minimum toothed-plate connector spacings - EC5 Table 8.8

Spacing within one row parallel to grain:	a1=(1.2+0.3*COS(alpha))*dc=90 mm
Spacing between connector rows perpendicular to grain:	a2=1.2*dc=90 mm
End distance (loaded)	a3t=1.5*dc=112.5 mm
End distance (unloaded)	a3c=(0.9+0.6*SIN(alpha))*dc=112.5 mm
Edge distance (loaded)	a4t=(0.6+0.2*SIN(alpha))*dc=60 mm
Edge distance (unloaded)	a4c=0.6*dc=45 mm

Joint slip check - EC5 Section 7

Stiffness of joint final condition at the SLS:	Kserfj=Kserj/(1+2*kdef)=3963.1 N
Final deflection of the joint at SLS:	utser=Fdsls/Kserfj+2=2.8075 mm

	Design load at joint	**4.56 kN**
DESIGN	**Design capacity of joint**	**10.706 kN**
SUMMARY	**Number of connectors in joint**	**1**
	Number of bolts in joint	**1**
	Toothed-plate connector type	**C7**
	Provide toothed-plate connectors on both sides of timber & on same bolt	

The connector bolts hold the members together and are assumed not to contribute to the load-carrying capacity of the connection. Use proformas 273 and 274 to evaluate the bolt contribution.

Location: Forces in rafter 1

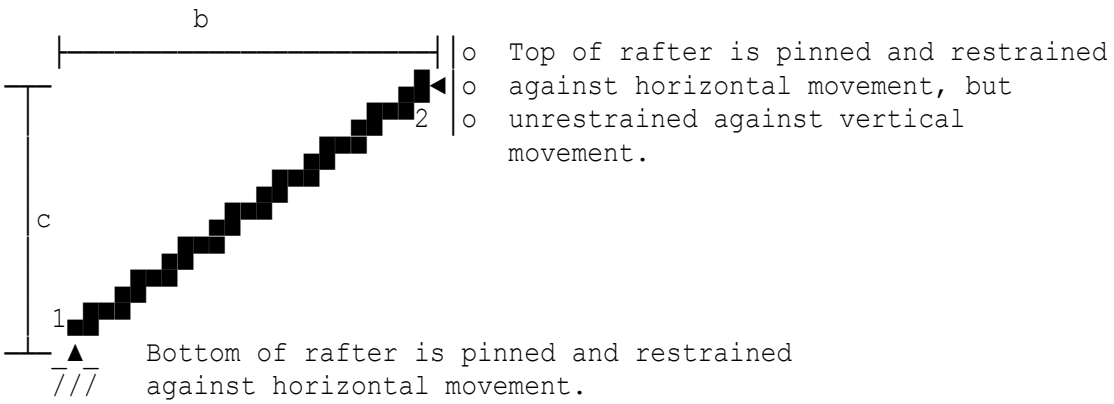

Rafter projection onto horizontal	b=3 m
Rafter projection onto vertical	c=1 m
Elastic modulus	E=9E6 kN/m²
Moment of inertia of rafter	I=14.063E-6 m⁴
Slope of roof	alpha=ATN(c/b)=0.32175 radians
	alpha'=DEG(alpha)=18.435 degrees
Length of rafter	r=SQR(b^2+c^2)=3.1623 m

Loads and reactions are positive in the directions shown.

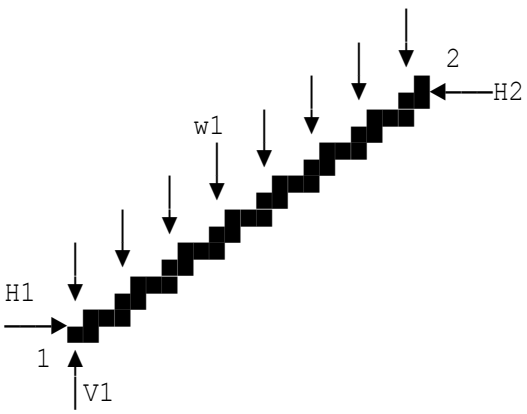

Load is UDL applied vertically per unit length of rafter.

Vertical load per unit length	w1=2 kN/m
Total load on rafter	W=w1*r=6.3246 kN
Vertical reaction at 1 (+ve up)	V1=W=6.3246 kN
Maximum moment (+ve sagging)	M=W*COS(alpha)*r/8=2.3717 kNm
Max defln in rafter (+ve is sag)	D1=5*W*COS(alpha)*r^3/(384*E*I)
	=0.01952 m
Span/deflection ratio	s'd=r/D1=162.01
Deflection/span ratio	d's=D1/r=0.0061726
Horizontal react at 1 (+ve right)	H1=W*b/(2*c)=9.4868 kN
Horizontal react at 2 (+ve left)	H2=9.4868 kN
Axial force at 1 (+ve compressn)	F1=V1*SIN(alpha)+H1*COS(alpha)=11 kN
Shear force at 1	S1=V1*COS(alpha)-H1*SIN(alpha)=3 kN

Location: Forces in rafter 2

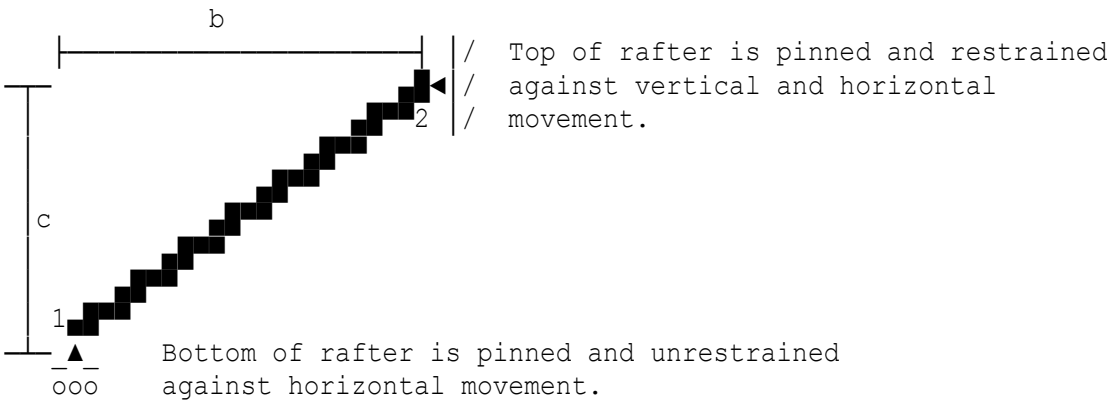

Rafter projection onto horizontal b=3 m
Rafter projection onto vertical c=1 m
Elastic modulus E=9E6 kN/m²
Moment of inertia of rafter I=14.063E-6 m⁴
Slope of roof alpha=ATN(c/b)=0.32175 radians
alpha'=DEG(alpha)=18.435 degrees
Length of rafter r=SQR(b^2+c^2)=3.1623 m
Loads and reactions are positive in the directions shown.

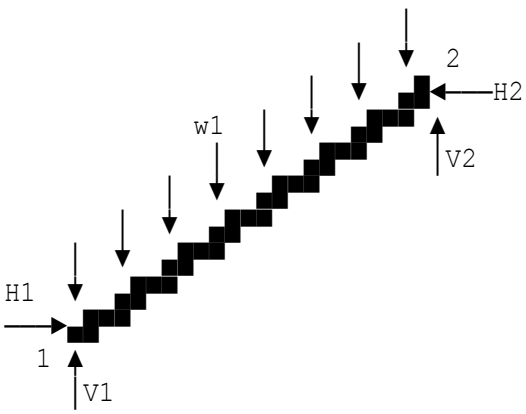

Load is UDL applied vertically
per unit length of rafter.

Vertical load per unit length w1=2 kN/m
Total load on rafter W=w1*r=6.3246 kN
Maximum moment (+ve sagging) M=W*COS(alpha)*r/8=2.3717 kNm
Max defln in rafter (+ve is sag) D1=5*W*COS(alpha)*r^3/(384*E*I)
=0.01952 m
Span/deflection ratio s'd=r/D1=162.01
Deflection/span ratio d's=D1/r=0.0061726
Horizontal react at 1 (+ve right) H1=0 kN as joint 1 is on rollers
Horizontal react at 2 (+ve left) H2=0 kN resolving horizontally
Vertical reaction at 1 (+ve up) V1=W/2=3.1623 kN
Vertical reaction at 2 (+ve up) V2=3.1623 kN
Axial force at 1 (+ve compress.) F1=V1*SIN(alpha)=1 kN
Shear force at 1 S1=V1*COS(alpha)=3 kN

Location: Forces in rafter 3

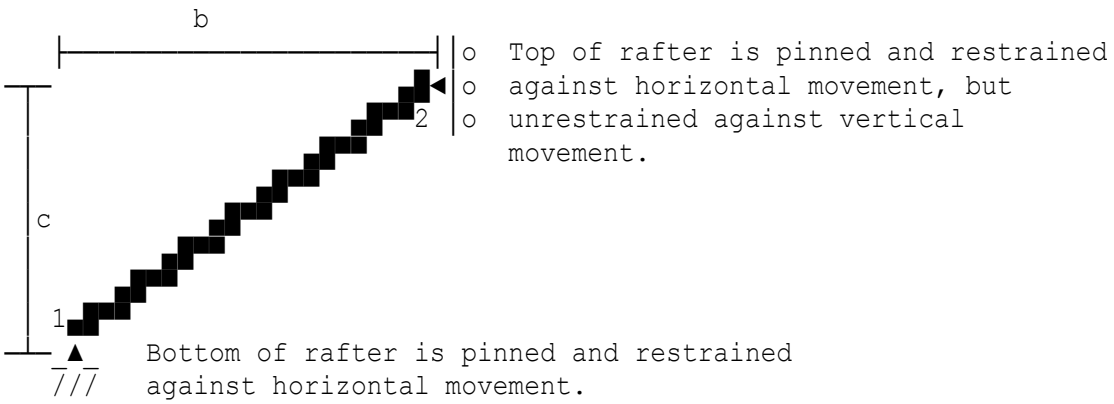

Rafter projection onto horizontal b=3 m
Rafter projection onto vertical c=1 m
Elastic modulus E=9E6 kN/m²
Moment of inertia of rafter I=14.063E-6 m⁴
Slope of roof alpha=ATN(c/b)=0.32175 radians
alpha'=DEG(alpha)=18.435 degrees
Length of rafter r=SQR(b^2+c^2)=3.1623 m
Loads and reactions are positive in the directions shown.

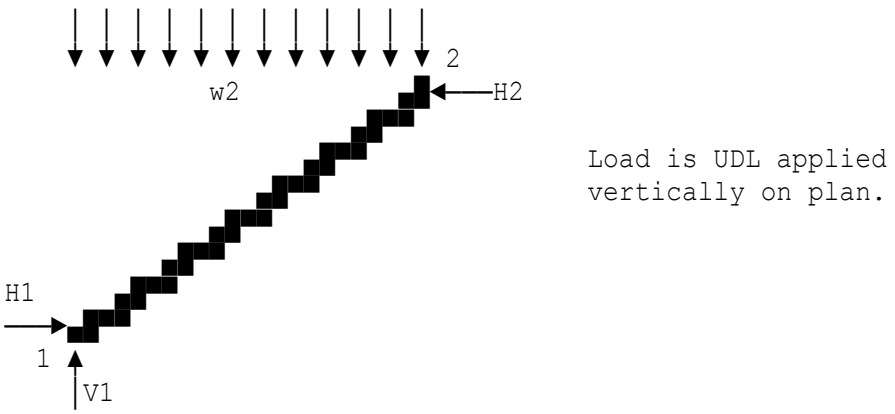

Plan load per unit length w2=1 kN/m
Total load on rafter W=w2*b=3 kN
Vertical reaction at 1 (+ve up) V1=W=3 kN
Maximum moment (+ve sagging) M=W*COS(alpha)*r/8=1.125 kNm
Max defln in rafter (+ve is sag) D1=5*W*COS(alpha)*r^3/(384*E*I)
=0.0092589 m
Span/deflection ratio s'd=r/D1=341.54
Deflection/span ratio d's=D1/r=0.0029279
Horizontal react at 1 (+ve right) H1=W*b/(2*c)=4.5 kN
Horizontal react at 2 (+ve left) H2=4.5 kN
Axial force at 1 (+ve compress.) F1=V1*SIN(alpha)+H1*COS(alpha)
=5.2178 kN
Shear force at 1 S1=V1*COS(alpha)-H1*SIN(alpha)
=1.423 kN

Location: Forces in rafter 4

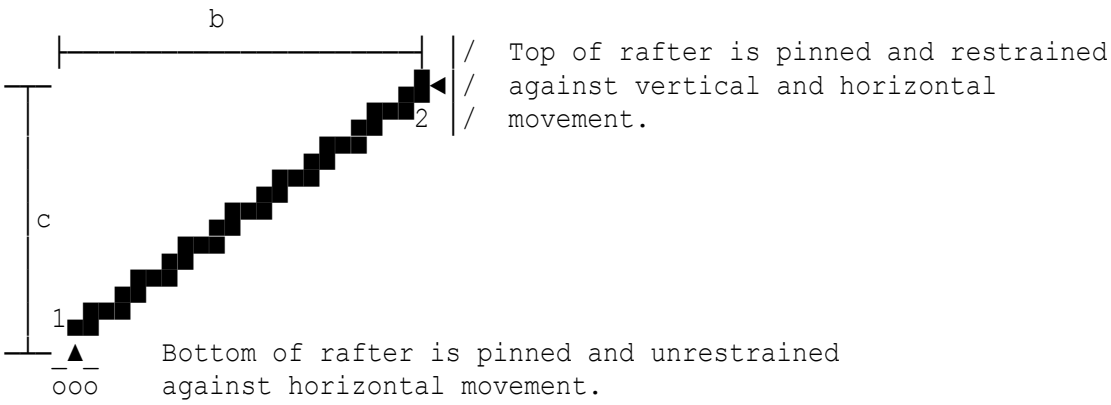

Rafter projection onto horizontal b=3 m
Rafter projection onto vertical c=1 m
Elastic modulus E=9E6 kN/m²
Moment of inertia of rafter I=14.063E-6 m⁴
Slope of roof alpha=ATN(c/b)=0.32175 radians
alpha'=DEG(alpha)=18.435 degrees
Length of rafter r=SQR(b^2+c^2)=3.1623 m
Loads and reactions are positive in the directions shown.

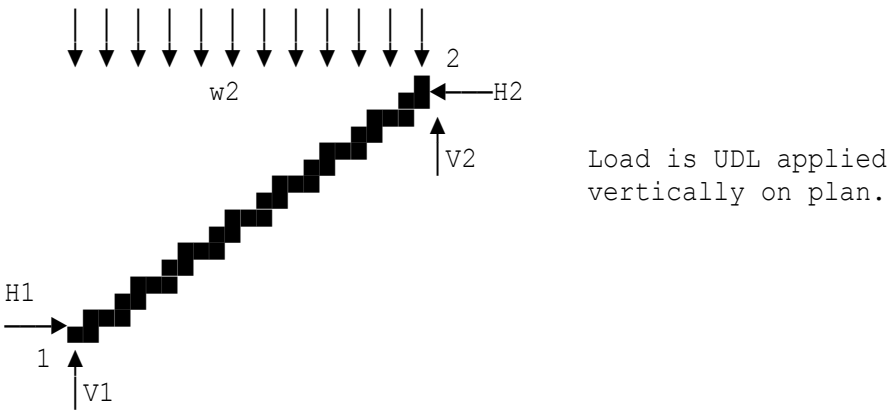

Plan load per unit length w2=2 kN/m
Total load on rafter W=w2*b=6 kN
Maximum moment (+ve sagging) M=W*COS(alpha)*r/8=2.25 kNm
Max defln in rafter (+ve is sag) D1=5*W*COS(alpha)*r^3/(384*E*I)
=0.018518 m
Span/deflection ratio s'd=r/D1=170.77
Deflection/span ratio d's=D1/r=0.0058559
Horizontal react at 1 (+ve right) H1=0 kN as joint 1 is on rollers
Horizontal react at 2 (+ve left) H2=0 kN resolving horizontally
Vertical reaction at 1 (+ve up) V1=W/2=3 kN
Vertical reaction at 2 (+ve up) V2=3 kN
Axial force at 1 (+ve compress.) F1=V1*SIN(alpha)=0.94868 kN
Shear force at 1 S1=V1*COS(alpha)=2.846 kN

Location: Forces in rafter 5

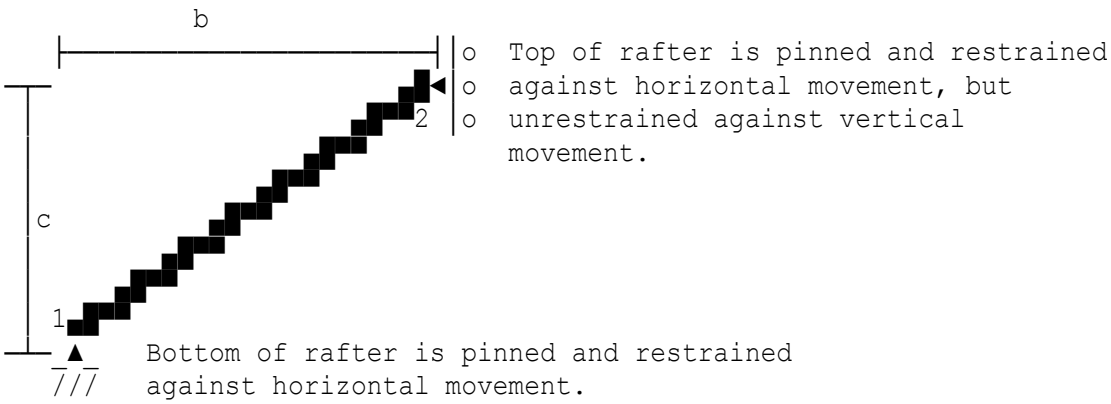

Rafter projection onto horizontal	b=3 m
Rafter projection onto vertical	c=1 m
Elastic modulus	E=9E6 kN/m²
Moment of inertia of rafter	I=14.063E-6 m⁴
Slope of roof	alpha=ATN(c/b)=0.32175 radians
	alpha'=DEG(alpha)=18.435 degrees
Length of rafter	r=SQR(b^2+c^2)=3.1623 m

Loads and reactions are positive in the directions shown.

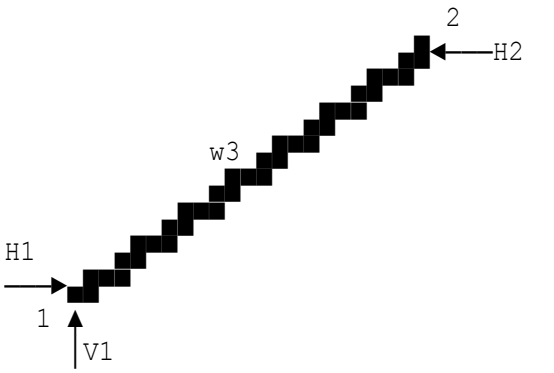

Suction load per unit length	w3=2 kN/m
Total load on rafter	W=w3*r=6.3246 kN
Maximum moment (+ve sagging)	M=-W*r/8=-2.5 kNm
Max defln in rafter (+ve is sag)	D1=-5*W*r^3/(384*E*I)=-0.020575 m
Span/deflection ratio	s'd=r/ABS(D1)=153.69
Deflection/span ratio	d's=ABS(D1)/r=0.0065065
Horizontal react at 2 (+ve left)	H2=-W*r/(2*c)=-10 kN
Horizontal react at 1 (+ve right)	H1=W*SIN(alpha)+H2=-8 kN
Vertical reaction at 1 (+ve up)	V1=-W*COS(alpha)=-6 kN
Axial force at 1 (+ve compress.)	F1=V1*SIN(alpha)+H1*COS(alpha)
	=-9.4868 kN
Shear force at 1	S1=V1*COS(alpha)-H1*SIN(alpha)
	=-3.1623 kN

Location: Forces in rafter 2

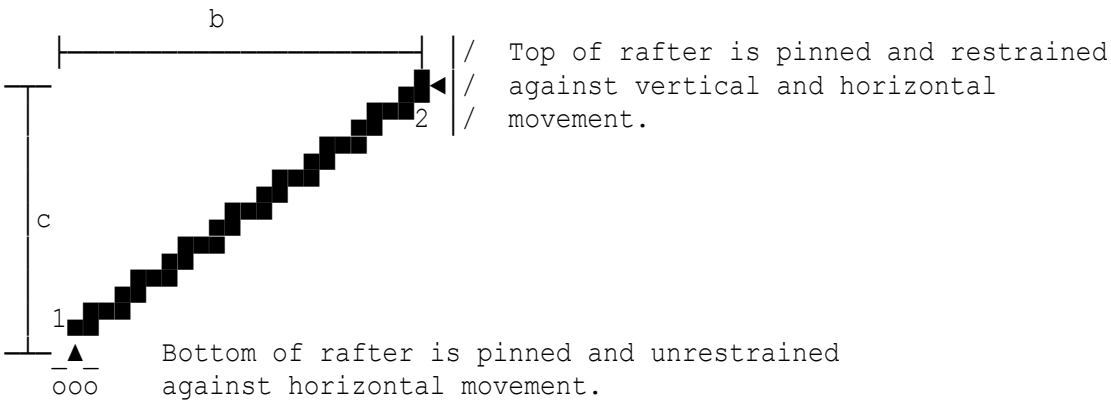

Rafter projection onto horizontal b=3 m
Rafter projection onto vertical c=1 m
Elastic modulus E=9E6 kN/m²
Moment of inertia of rafter I=14.063E-6 m⁴
Slope of roof alpha=ATN(c/b)=0.32175 radians
alpha'=DEG(alpha)=18.435 degrees
Length of rafter r=SQR(b^2+c^2)=3.1623 m
Loads and reactions are positive in the directions shown.

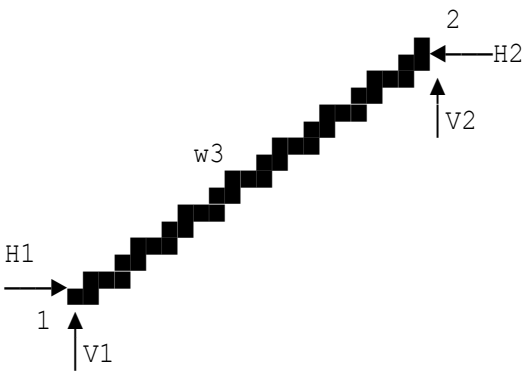

w3 = UDL load from wind suction (+ve) applied at right angles to rafter.

Suction (+ve) per unit length w3=2 kN/m
Total load on rafter W=w3*r=6.3246 kN
Maximum moment (+ve sagging) M=-W*r/8=-2.5 kNm
Max defln in rafter (+ve is sag) D1=-5*W*r^3/(384*E*I)=-0.020575 m
Span/deflection ratio s'd=r/ABS(D1)=153.69
Deflection/span ratio d's=ABS(D1)/r=0.0065065
Horizontal react at 1 (+ve right) H1=0 kN as joint 1 is on rollers
Horizontal react at 2 (+ve left) H2=-W*SIN(alpha)=-2 kN
Vertical reaction at 2 (+ve up) V2=(-W*r/2-H2*c)/b=-2.6667 kN
Vertical reaction at 1 (+ve up) V1=-W*COS(alpha)-V2=-3.3333 kN
Axial force at 1 (+ve compress.) F1=V1*SIN(alpha)=-1.0541 kN
Shear force at 1 S1=V1*COS(alpha)=-3.1623 kN
Shear force at 2 S2=V2*COS(alpha)+H2*SIN(alpha)
=-3.1623 kN

Location: Forces in couple roof

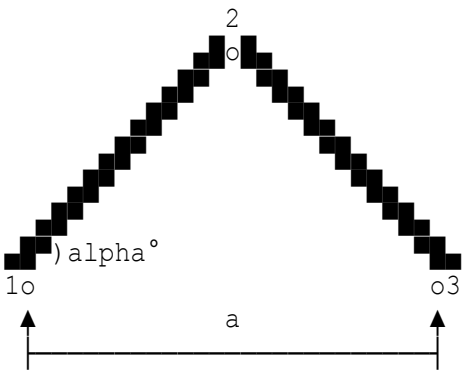

NOTE: At joints 1 and 3 there must be either two horizontal restraints, or a tie between joints 1 and 3, to prevent the formation of a mechanism.

Span of couple	a=3 m
Height of couple	c=1 m
Elastic modulus	E=9E6 kN/m²
Moment of inertia of rafters	I=1 m⁴

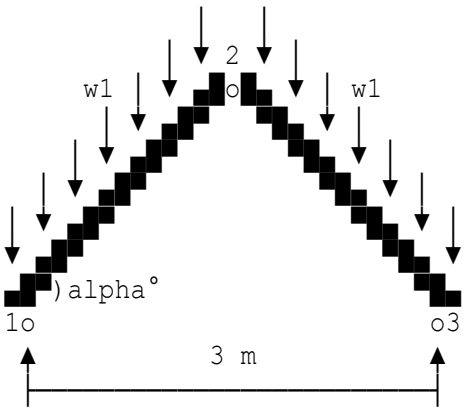

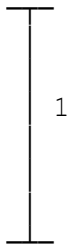

Vertical load per unit length	w1=2 kN/m
Total load on truss	W=w1*2*r=7.2111 kN
Vertical reaction at 1 (+ve up)	V1=W/2=3.6056 kN
Vertical reaction at 3 (+ve up)	V3=3.6056 kN
Horizontal react at 1 (+ve right)	H1=V1*a/(4*c)=2.7042 kN
Horizontal react at 3 (+ve left)	H3=2.7042 kN
Max moment in 1-2 (+ve sagging)	M=V1*COS(alpha)*r/8=0.67604 kNm
Max defln in 1-2 (+ve sagging)	D1=5*V1*COS(alpha)*r^3/(384*E*I) =25.43E-9 m
Span/deflection ratio	s'd=r/D1=70.892E6
Deflection/span ratio	d's=D1/r=14.106E-9
Axial force at 1 (+ve compress.)	F1=V1*SIN(alpha)+H1*COS(alpha)=4.25 kN
Shear force at 1	S1=V1*COS(alpha)-H1*SIN(alpha)=1.5 kN

Location: Forces in collar tie roof

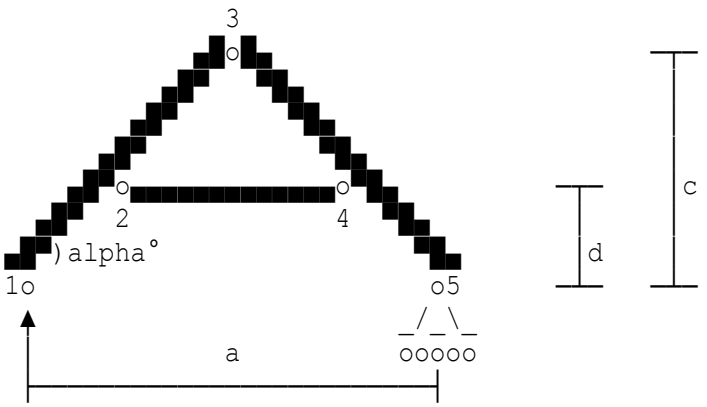

Span of truss	a=3 m
Height of truss	c=1 m
Height to tie	d=0.3 m
Elastic modulus	E=9E6 kN/m²
Moment of inertia of rafters	I=1 m⁴

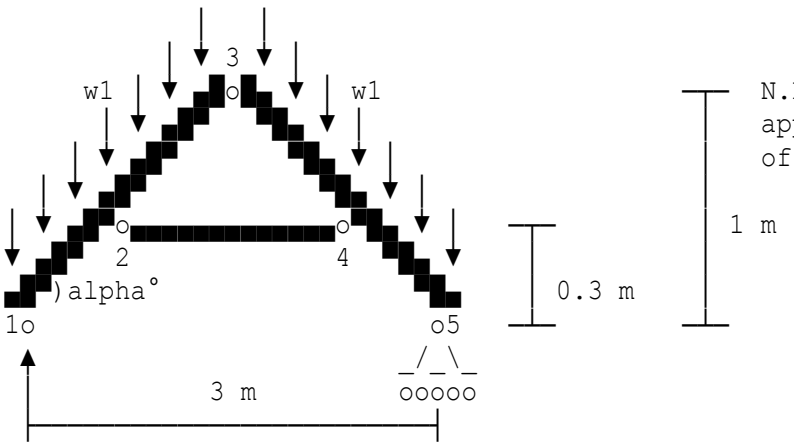

N.B. vertical load applied = twice length of rafter times w1

Vertical load per unit length	w1=2 kN/m
Total load on truss	W=w1*2*r=7.2111 kN
Vertical reaction at 1 (+ve up)	V1=W/2=3.6056 kN
Vertical reaction at 5 (+ve up)	V5=3.6056 kN
Horizontal react at 1 (+ve right)	H1=0 kN
Axial force 1->2 (+ve compress.)	F1=V1*SIN(alpha)=2 kN
Shear force at 1 (or 5)	S1=V1*COS(alpha)=3 kN
Force in tie (-ve tension)	T=-(V1*a/2-w1*r*a/4)/(c-d)=-3.8631 kN
Axial force 2->3 (+ve compress.)	F2=F1-e*w1*SIN(alpha)-T*COS(alpha) =4.6143 kN
Mmt at 2 (+ve sagging)	M2=V1*f-w1*e*f/2=1.3791 kNm
Constant	n=N/L=0.42857
Magnitude of udl normal to rafter	w=w1*COS(alpha)=1.6641 kN/m

The deflection due to spreading is calculated from bending strain energy only, i.e. axial shortening and shear deformation are ignored.

Normal defln at 5 due to UDL	D5u=-w*L^3*N*(3*n^3+4*n^2-1)/(24*E *I)=0.24413E-9 m
Normal defln at 5 due to shear	D5s=S1*N^2*(N+L)/(3*E*I)=58.59E-9 m
Defln at 5 (+ve is rightwards)	D5=2*(D5u+D5s)*SIN(alpha)=65.271E-9 m

Location: Forces and moments in lean-to: Mark A7

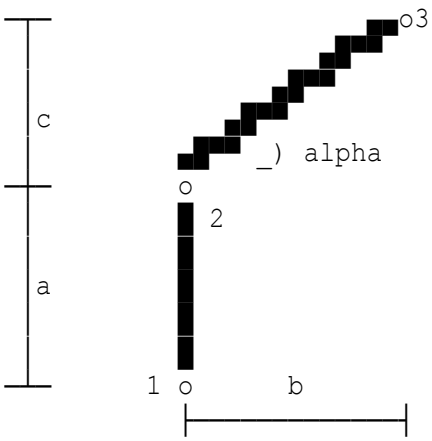

Height of post	a=2.4 m
Width of lean-to	b=2.1 m
Rafter projection onto vertical	c=1 m
Moment of inertia of rafter	Ir=14.063E-6 m⁴
Moment of inertia of post	Ip=14.063E-6 m⁴
Elastic modulus	E=9E6 kN/m²
Vertical load per unit length	w1=2 kN/m
Max defln in rafter (+ve is sag)	D2=5*W*COS(alpha)*r^3/(384*E*Ir) =0.0054371 m
Span/deflection ratio	s'd=r/D2=427.79
Deflection/span ratio	d's=D2/r=0.0023376
Horizontal react at 1 (+ve right)	H1=0 kN as 1-2 is free to articulate
Horizontal react at 3 (+ve left)	H3=0 kN resolving horizontally
Vertical reaction at 1 (+ve up)	V1=W/2=2.3259 kN
Vertical reaction at 3 (+ve up)	V3=2.3259 kN
Axial force 1->2 (+ve compress.)	F1=V1=2.3259 kN
Axial force 2->3 (+ve compress.)	F2=V1*SIN(alpha)=1 kN
Shear force 2->3	S2=V1*COS(alpha)=2.1 kN

Copyright 1986-2024 Fitzroy Systems Ltd.

Location: Trussed beam: support in main room

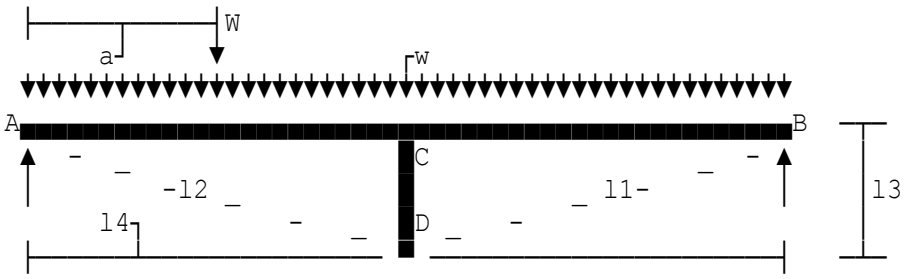

Length of beam AB	l4=6.096 m
UDL on beam	w=13.076 kN/m
Point load on beam	W=0 kN
Distance to point load	a=0 m
Width of beam AB	b=0.2286 m
Depth of beam AB	d=0.2286 m
Elastic modulus for beam AB	E4=9.2666E6 kN/m²
Length of strut CD	l3=0.6096 m
Area of strut CD	A3=0.015484 m²
Elastic modulus for strut CD	E3=92.666E6 kN/m²
Area of ties AD and BD	A1=0.50671E-3 m²
Elastic modulus for ties AD & BD	E1=185.33E6 kN/m²

Trussed beam properties

Area of beam cross-section	A4=b*d=0.052258 m²
Section modulus of beam	zb=b*d^2/6=0.001991 m³
Inertia of beam	I4=b*d^3/12=0.22757E-3 m⁴
Length of ties AD and BD	l1=SQR((l4/2)^2+l3^2)=3.1084 m
Elasticity for strut	e3=l3/(E3*A3)=0.42486E-6 m/kN
Elasticity for two ties	e1=l1^3/(2*l3^2*E1*A1)=0.4303E-3 m/kN
Elasticity for beam in compress.	e4=l4^3/(16*l3^2*A4*E4)=78.678E-6 m/kN
Elasticity for beam in bending	e4'=l4^3/(48*E4*I4)=0.0022379 m/kN
Total elasticity	te=e1+e3+e4+e4'=0.0027473 m/kN

Forces due to UDL

Deflection at C for unbraced beam	deltc=5*w*l4^4/(384*E4*I4)=0.11149 m
Hence thrust in the strut	Fs=deltc/te=40.582 kN
Pull in each tie-rod	Ft=Fs*0.5*l1/l3=103.46 kN
Thrust in beam	Fb=0.5*Fs*(l4/2)/l3=101.46 kN
End reactions	R=w*l4/2=39.856 kN
Position for zero shear	x=0.5*(2*R-Fs)/w=1.4962 m
Shear in beam at ends	sb=R-Ft*l3/l1=19.565 kN
Shear in beam at centre	sc=sb-(l4/2)*w=-20.291 kN
Maximum sagging bending moment	M=sb*x-0.5*w*x^2=14.636 kNm
Bending moment in beam at C	Mc=sb*l4/2-R*l4/4=-1.1073 kNm
Maximum bending moment in beam	Mm=ABS(M)=14.636 kNm
Extreme fibre bending stress	fb=Mm/zb=7351.2 kN/m²
Axial stress in beam	fa=Fb/A4=1941.4 kN/m²
Maximum compressive stress	fmc=fa+fb=9292.6 kN/m²
Maximum tensile stress	fmt=fb-fa=5409.7 kN/m²

Location: Forces in braced shed type GH-4

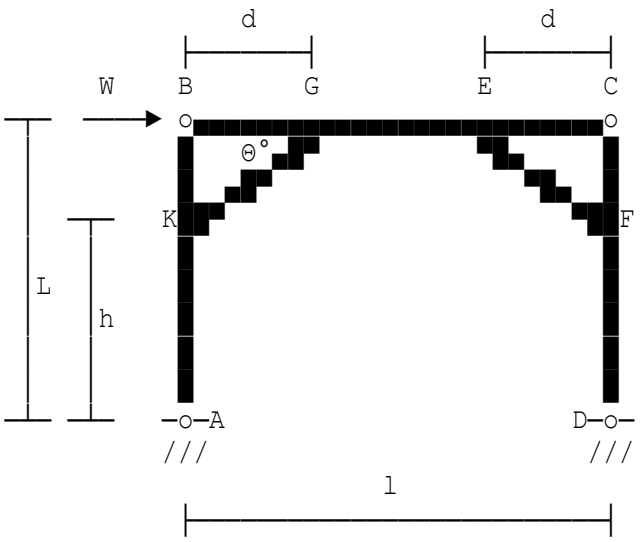

Members AB and CD are similar and represent vertical columns connected by a cross-beam BC having pinned ends. Members KG and EF are braces with pinned ends.

Column feet are pinned.

Span of frame	l=2.4 m
Height of frame	L=3 m
Height to knee brace	h=2.4 m
Distance B to G (also E to C)	d=0.8 m
Horizontal force at B	W=2.5 kN
Horizontal reactions at A & D	H=W/2=1.25 kN
Vertical reaction at D	V=W*L/l=3.125 kN
Moments at K and F are equal	Mk=H*h=3 kNm
Moments at G and E are equal	Mg=W*L*(0.5-d/l)=1.25 kNm
Slope of knee brace with horiz.	theta=ATN((L-h)/d)=0.6435 radians
Tension in KG	T=0.5*W*L/((L-h)*COS(theta))=7.8125 kN
Thrust in EF	T'=T=7.8125 kN
Thrust in BG	t=0.5*W*(2*L-h)/(L-h)=7.5 kN
Tension in EC	t'=t-W=5 kN
Thrust in GE	tg=0.5*W=1.25 kN
Shearing force from B to G	vbg=W*L*(1/l-1/(2*d))=-1.5625 kN
Shearing force from G to E	vge=W*L/l=3.125 kN

Location: Proformas to BS5400:Part 3:2000

Units for input of data and output of results

Moments	kNm
Forces	kN
Stresses	N/mm^2
Young's modulus	N/mm^2
Dimensions including spans	mm
Areas	mm^2
Second moments of area	mm^4

Numbers may be input in exponent form as shown below:

20900000 may be input as 209E5
0.00209 may be input as 2.09E-3

Location: Proformas to BS EN 1993-2:2006

Units for input of data and output of results

Moments	kNm
Forces	kN
Stresses	N/mm^2
Young's modulus	N/mm^2
Dimensions including spans	mm
Areas	mm^2
Second moments of area	mm^4

Numbers may be input in exponent form as shown below:

20900000 may be input as 209E5
0.00209 may be input as 2.09E-3

Copyright 1986-2024 Fitzroy Systems Ltd.

Location: BS 5400:Part 3:2000

Design objectives and partial safety factors

The proforma is in accordance with BS 5400:Part 3:2000 "Code of Practice for Design of Steel Bridges" as implemented by Departmental Standard BD 13/06.

Values of partial safety factors (Clause 4.3.3 and Table 2)

gfL - the values of gfL are given in Departmental Standard BD 37/01 for each type and combination of loading.

gf3 - the factor gf3 in this part of BS 5400 shall be taken as 1.1 for the ultimate limit state and 1.0 for the serviceability limit state.

a) Ultimate limit state

Where explicitly expressed in a strength requirement in this part of BS5400 gm shall be taken as 1.05 except in the following Clauses:

Structural component and behaviour	Clauses	gm
Strength of longitudinal stiffeners	9.10.2.3(a) and (b) 9.11.5.2	1.20 (Comp) 1.05 (Tens)
Buckling resistance of stiffeners	9.13.5.3, 9.13.6, 9.14.4.3, 9.17.6.7, 9.17.7.3.2, 9.17.8	1.20
Fasteners in stiffeners	14.5.3.2, 14.5.3.3, 14.5.3.5	1.20
Fasteners in shear	14.5.3.4	1.10
Friction capacity of HSFG bolts	14.5.4.2	1.30
Welds	14.6.3.11.1, 14.6.3.11.2, 14.6.3.11.3	1.20

b) Serviceability limit state

Where explicitly expressed in a strength requirement in this part of BS5400 gm shall be taken as 1.0 except in the following Clause:

Structural component and behaviour	Clauses	gm
Friction capacity of HSFG bolts	14.5.4.2	1.20

Location: Partial factors to BS EN 1993-2

Partial factors for materials - (BS EN 1993-2 Table 6.1)

Resistance type	Factor
(a) Resistance of members and cross-section	
- resistance of cross-sections to excessive yielding including local buckling	γM0=1.0
- resistance of members to instability assessed by member checks	γM1=1.1
- resistance to fracture of cross sections in tension	γM2=1.25
(b) Resistance of joints	
- resistance of bolts	γM2=1.25
- resistance of rivets	γM2=1.25
- resistance of pins	γM2=1.25
- resistance of welds	γM2=1.25
- resistance of plates in bending	γM2=1.25
- slip resistance at ULS	γM3=1.25
- slip resistance at SLS	γM3ser=1.10
- bearing resistance of an injection bolt	γM4=1.10
- resistance of joints in hollow section lattice girders	γM5=1.10
- resistance of pins at SLS	γM6ser=1.00
- preload of high-strength bolts	γM7=1.10

Partial factors on actions - (BS EN 1990)

Partial factor on:	ULS	SLS
Permanent actions:		
Concrete self weight	γG=1.35	γG=1.00
Steel self weight	γG=1.20	γG=1.00
Super-imposed dead	γG=1.20	γG=1.00
Road surfacing	γG=1.20	γG=1.00
Weight of soil	γG=1.35	γG=1.00
Self weight of other materials	γG=1.35	γG=1.00
Variable actions:		
Road traffic actions	γQ=1.35	γG=1.00
Pedestrian actions	γQ=1.35	γG=1.00
Wind actions	γQ=1.70	γG=1.00
Thermal actions	γQ=1.55	γG=1.00

Location: BS5400:Part 3:2000

Steel grades and standards

Standard BS EN	Strength Grade	Impact Quality
10025	S235	J0
10025	S235	J2
10025	S275	J0
10025	S275	J2
10025	S355	J0
10025	S355	J2
10025	S355	K2
10113-2	S275	N
10113-3	S275	M
10113-2	S275	NL
10113-3	S275	ML
10113-2	S355	N
10113-3	S355	M
10113-2	S355	NL
10113-3	S355	ML
10113-2	S420	N
10113-3	S420	M
10113-2	S420	NL
10113-3	S420	ML
10113-2	S460	N
10113-3	S460	M
10113-2	S460	NL
10113-3	S460	ML

Standard BS EN	Strength Grade	Impact Quality
10137	S460	Q
10137	S460	QL
10137	S460	QL1
10155	S235	J0
10155	S235	J2
10155	S355	J0
10155	S355	J2
10155	S355	K2
10210	S275	J0
10210	S275	J2
10210	S275	N
10210	S275	NL
10210	S355	J0
10210	S355	J2
10210	S355	N
10210	S355	NL
10210	S460	N
10210	S460	NL

Standard BS	Strength Grade	Impact Quality
7668	S345	J0
7668	S345	G

Longitudinal Charpy V-notch

G - 27J @ -15° C	M - 40J @ -20° C	Q - 30J @ -20° C
J0 - 27J @ 0° C	ML - 27J @ -50° C	QL - 30J @ -40° C
J2 - 27J @ -20° C	N - 40J @ -20° C	QL1 - 30J @ -60° C
K2 - 40J @ -20° C	NL - 27J @ -50° C	

Note: 40J @ -20° C ≡ 27J @ -30° C Clause 6.5.4
30J @ -xx° C ≡ 27J @ -xx° C

Location: BS EN 1993-2:2006

Steel grades and standards

Standard BS EN	Strength Grade	Impact Quality
10025	S235	J0
10025	S235	J2
10025	S275	J0
10025	S275	J2
10025	S355	J0
10025	S355	J2
10025	S355	K2
10113-2	S275	N
10113-3	S275	M
10113-2	S275	NL
10113-3	S275	ML
10113-2	S355	N
10113-3	S355	M
10113-2	S355	NL
10113-3	S355	ML
10113-2	S420	N
10113-3	S420	M
10113-2	S420	NL
10113-3	S420	ML
10113-2	S460	N
10113-3	S460	M
10113-2	S460	NL
10113-3	S460	ML

Standard BS EN	Strength Grade	Impact Quality
10137	S460	Q
10137	S460	QL
10137	S460	QL1
10155	S235	J0
10155	S235	J2
10155	S355	J0
10155	S355	J2
10155	S355	K2
10210	S275	J0
10210	S275	J2
10210	S275	N
10210	S275	NL
10210	S355	J0
10210	S355	J2
10210	S355	N
10210	S355	NL
10210	S460	N
10210	S460	NL

Standard BS	Strength Grade	Impact Quality
7668	S345	J0
7668	S345	G

Charpy V-notch

Longitudinal Charpy V-notch		
G - 27J @ -15° C	M - 40J @ -20° C	Q - 30J @ -20° C
J0 - 27J @ 0° C	ML - 27J @ -50° C	QL - 30J @ -40° C
J2 - 27J @ -20° C	N - 40J @ -20° C	QL1 - 30J @ -60° C
K2 - 40J @ -20° C	NL - 27J @ -50° C	

Location: BS5400:Part 3:2000

The proforma is in accordance with BS 5400:Part 3:2000 "Code of Practice for Design of Steel Bridges" as implemented by Departmental Standard BD 13/06.

For steel conforming to the standards in Clause 6.1.2, and supplied within the specified tolerances, the nominal yield stress, σy, should the minimum yield strength specified for the appropriate thickness.

Clause 6.3 states the specified minimum ultimate tensile stress of steel plates and sections of steel should not be less than 1.2σy where σy is the nominal yield stress defined in Clause 6.2.

Copyright 1986-2024 Fitzroy Systems Ltd.

Location: BS EN 1993-2:2006

The proforma is in accordance with BS EN 1993-2:2006 "Eurocode 3 Design of Steel Structures - Part 2: Steel bridges".

Steel conforming to Cl. 3.1 and Table 3.1 of EN 1993-1-1 and supplied within the specified tolerances, the nominal yield stress, fy, should be the minimum yield strength specified for the appropriate thickness.

The ultimate tensile strength fu for hot rolled structural steel should be in accordance with Table 3.1 of BS EN 1993-1-1:2005. Steel grades in Table 3.1 will automatically provide the levels of ductility required by Clause 3.3.2.

Copyright 1986-2024 Fitzroy Systems Ltd.

Location: Ex1 - Edge beam

Minimum effective bridge temperature	Ue=-10 °C
Test temperature	T27J=-30 °C
Factor kd	kd=1
Ratio	srat=0.4
Factor ksigma	ksigma=1
Factor ks	ks=1
Nominal yield stress σy	sigy=355 N/mm²
Limiting thickness	t=50*k*(355/sigy)^1.4*1.2^((U-T27J)/10)=65.727 mm
Limiting thickness for k=1	t1=50*(355/sigy)^1.4*1.2^((U-T27J)/10)=72 mm

Location: Ex1 - Worked example 3.2-2 Designers' Guide to EC3 Part 2

Element thickness	t=40 mm
Minimum ambient air temperature	Tmd=-12 °C
Radiation loss adjustment	dTr=0 °C
Adjustment for stress	dTs=0 °C
Safety allowance	dTR=0 °C
Impact strain rate	e=0.017 /s
Reference strain rate	eo=0.4E-3 /s
Adjustment for cold forming	dTecf=0 °C

SUMMARY OF RESULTS

Actual element thickness	**40 mm**
Maximum thickness permitted	**43.545 mm**
Steel grade	**S 355 (from Table 2.1)**
Steel sub-grade	**J2 (from Table 2.1)**
Steel strength grade required	**S355J2**

NOTE: Further reference should be made to the National Annex to ensure that the grades will also meet any additional guidelines at welded details.

Location: Ex2 - Example 3.2-1 Designers' Guide to EC3 Pt 2 bridge 2

Element thickness	t=30 mm
Minimum ambient air temperature	Tmd=-20 °C
Radiation loss adjustment	dTr=0 °C
Adjustment for stress	dTs=0 °C
Safety allowance	dTR=0 °C
Adjustment for cold forming	dTecf=0 °C

SUMMARY OF RESULTS

Actual element thickness	**30 mm**
Maximum thickness permitted	**35 mm**
Steel grade	**S 355 (from Table 2.1)**
Steel sub-grade	**J0 (from Table 2.1)**
Steel strength grade required	**S355J0**

NOTE: Further reference should be made to the National Annex to ensure that the grades will also meet any additional guidelines at welded details.

Location: Ex3 - Example 3.2-1 Designers' Guide to EC3 Pt 2 bridge 6

Element thickness	t=63 mm
Minimum ambient air temperature	Tmd=-20 °C
Radiation loss adjustment	dTr=0 °C
Adjustment for stress	dTs=0 °C
Safety allowance	dTR=0 °C
Adjustment for cold forming	dTecf=0 °C

SUMMARY OF RESULTS

Actual element thickness	**63 mm**
Maximum thickness permitted	**90 mm**
Steel grade	**S 355 (from Table 2.1)**
Steel sub-grade	**ML or NL (from Table 2.1)**
Steel strength grade required	**S355ML or S355NL**

NOTE: Further reference should be made to the National Annex to ensure that the grades will also meet any additional guidelines at welded details.

Location: Ex1 - Internal girder

Stress analysis - Allowance for shear lag (Clause 8.2)

The calculations are in accordance with BS5400:Part 3:2000 "Code of Practice for Design of Steel Bridges" as implemented by Departmental Standard BD 13/06.

Portion 1

Portion of flange spans between two webs.

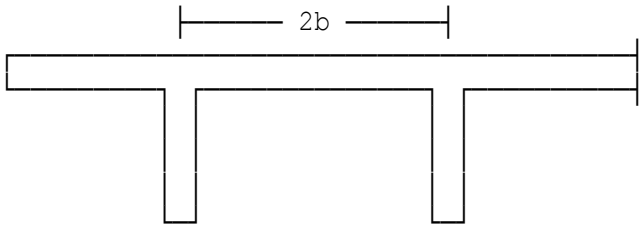

Dimension b b(1)=500 mm
Span of beam between centres of support:
L=2000 mm

Effective breadth ratio for interior spans of continuous beam from Table 5 is 0.36.
Effective breadth be(1)=psi(i)*b(i)=180 mm

Portion 2

Portion of flange projects beyond an outer web.

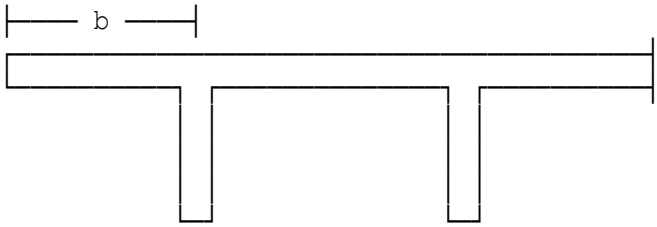

Dimension b b(2)=250 mm

Effective breadth ratio for interior spans of continuous beam from Table 5 is 0.615.
Effective breadth be(2)=k(i)*psi(i)*b(i)=150.87 mm
Total effective breadth be=be(1)+be(2)=330.87 mm

Location: Ex1 - Internal girder without longitudinal stiffeners

Stress analysis - Allowance for shear lag

The proforma is in accordance with BS EN 1993-2:2006 "Eurocode 3 Design of Steel Structures - Part 2: Steel bridges".

The proforma calculates the effective widths for shear lag for members in bending as per Clause 6.2.2.3.

Portion 1

Portion of flange spans between two webs.

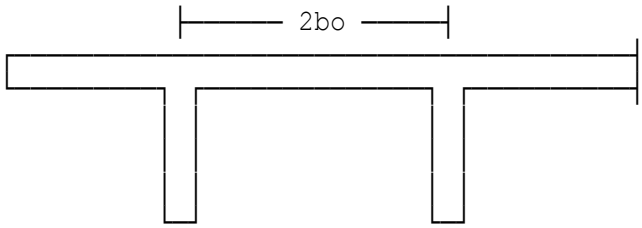

Dimension bo bo(1)=500 mm
Span of beam between centres of support:
L=2000 mm
Distance below is between points of zero bending moment from Fig. 3.1 of BS EN 1993-1-5:2006.
Effective length Le=1400 mm
Effective width at SLS bes(1)=beta*bo(i)=275.28 mm
Effective width at ULS beu(1)=beta^k*bo(i)=404.02 mm

Portion 2

Portion of flange projects beyond an outer web.

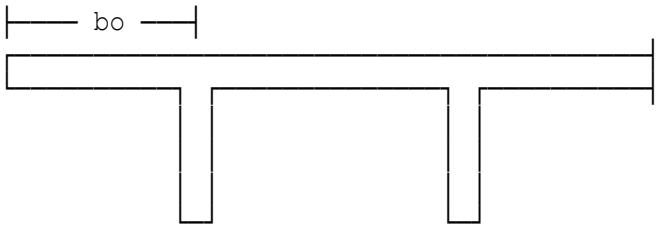

Dimension bo bo(2)=250 mm
Distance below is between points of zero bending moment from Fig. 3.1 of BS EN 1993-1-5:2006.
Effective length Le=1400 mm
Effective width at SLS bes(2)=beta*bo(i)=207.63 mm
Effective width at ULS beu(2)=beta^k*bo(i)=241.85 mm
Total effective width at SLS beff=bes(1)+bes(2)=482.91 mm
Total effective width at ULS beff=beu(1)+beu(2)=645.86 mm

Location: Ex2 - Internal girder with longitudinal stiffeners

Stress analysis - Allowance for shear lag

The proforma is in accordance with BS EN 1993-2:2006 "Eurocode 3 Design of Steel Structures - Part 2: Steel bridges".

The proforma calculates the effective widths for shear lag for members in bending as per Clause 6.2.2.3.

Portion 1

Portion of flange spans between two webs.

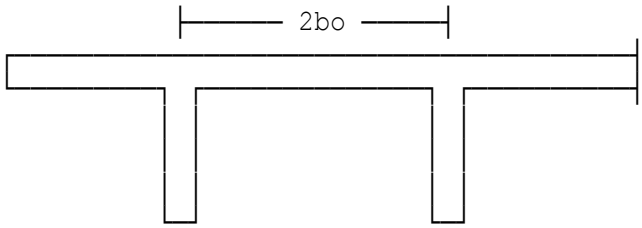

Dimension bo bo(1)=500 mm
Span of beams between centres of support:
Beam span on LHS of support L1=2000 mm
Beam span on RHS of support L2=2000 mm
Distance below is between points of zero bending moment from Fig. 3.1 of BS EN 1993-1-5:2006.
Effective length Le=1000 mm
Total area of long.stiffeners Asl=500 mm²
Flange plate thickness t=15 mm
Effective width at SLS bes(1)=beta*bo(i)=184.73 mm
Effective width at ULS beu(1)=beta^k*bo(i)=298.99 mm

Portion 2

Portion of flange projects beyond an outer web.

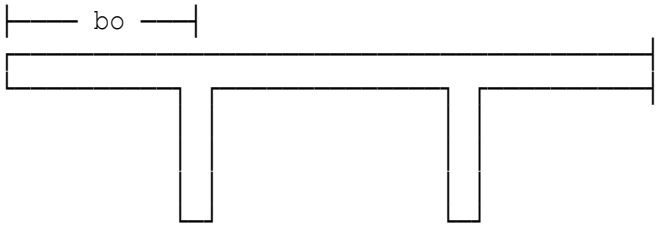

Dimension bo bo(2)=250 mm
Distance below is between points of zero bending moment from Fig. 3.1 of BS EN 1993-1-5:2006.
Effective length Le=1000 mm
Effective width at SLS bes(2)=beta*bo(i)=178.57 mm
Effective width at ULS beu(2)=beta^k*bo(i)=229.83 mm
Total effective width at SLS beff=bes(1)+bes(2)=363.3 mm
Total effective width at ULS beff=beu(1)+beu(2)=528.82 mm

Location: Ex3 - Internal girder section considered at mid-span

Stress analysis - Allowance for shear lag

The proforma is in accordance with BS EN 1993-2:2006 "Eurocode 3 Design of Steel Structures - Part 2: Steel bridges".

The proforma calculates the effective widths for shear lag for members in bending as per Clause 6.2.2.3.

Portion 1

Portion of flange spans between two webs.

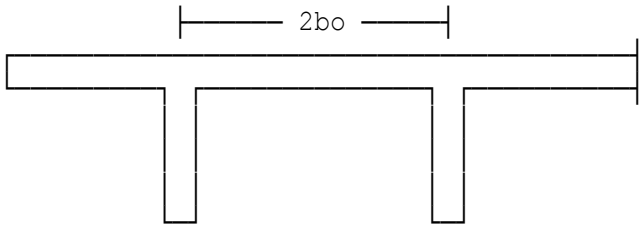

Dimension bo bo(1)=500 mm
Span of beam between centres of support:
L=2000 mm
Distance below is between points of zero bending moment from Fig. 3.1 of BS EN 1993-1-5:2006.
Effective length Le=1400 mm
Effective width at SLS bes(1)=beta*bo(i)=275.28 mm
Effective width at ULS beu(1)=beta^k*bo(i)=404.02 mm

Portion 2

Portion of flange projects beyond an outer web.

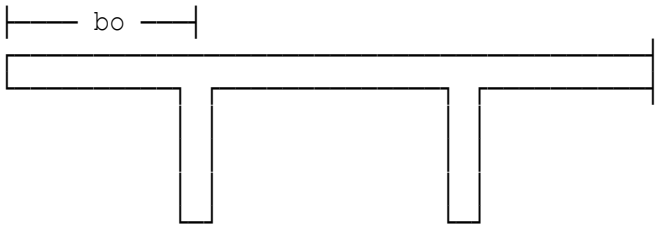

Dimension bo bo(2)=250 mm
Distance below is between points of zero bending moment from Fig. 3.1 of BS EN 1993-1-5:2006.
Effective length Le=1400 mm
Effective width at SLS bes(2)=beta*bo(i)=207.63 mm
Effective width at ULS beu(2)=beta^k*bo(i)=241.85 mm
Total effective width at SLS beff=bes(1)+bes(2)=482.91 mm
Total effective width at ULS beff=beu(1)+beu(2)=645.86 mm

Location: Ex4 - Internal girder without longitudinal stiffeners

Stress analysis - Allowance for shear lag

The proforma is in accordance with BS EN 1993-2:2006 "Eurocode 3 Design of Steel Structures - Part 2: Steel bridges".

The proforma calculates the effective widths for shear lag for members in bending as per Clause 6.2.2.3.

Portion 1

Portion of flange spans between two webs.

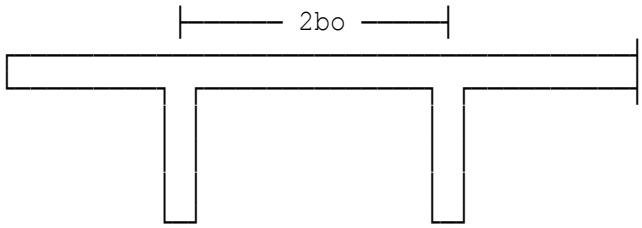

Dimension bo bo(1)=500 mm
Span of beams between centres of support:
Beam span on LHS of support L1=2000 mm
Beam span on RHS of support L2=2000 mm
Distance below is between points of zero bending moment from Fig. 3.1 of BS EN 1993-1-5:2006.
Effective length Le=1000 mm
Effective width at SLS bes(1)=beta*bo(i)=113.76 mm
Effective width at ULS beu(1)=beta^k*bo(i)=238.5 mm

Portion 2

Portion of flange projects beyond an outer web.

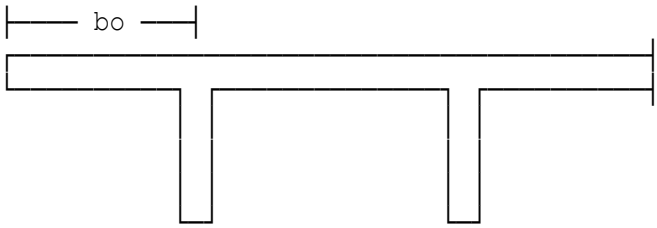

Dimension bo bo(2)=250 mm
Distance below is between points of zero bending moment from Fig. 3.1 of BS EN 1993-1-5:2006.
Effective length Le=1000 mm
Effective width at SLS bes(2)=beta*bo(i)=96.51 mm
Effective width at ULS beu(2)=beta^k*bo(i)=197.06 mm
Total effective width at SLS beff=bes(1)+bes(2)=210.27 mm
Total effective width at ULS beff=beu(1)+beu(2)=435.56 mm

Location: Ex1 - Girder A

BS5400:Part 3:2000 - Shape limitations for flanges

Flanges and webs - Requirements for compact section

The calculations are in accordance with BS 5400:Part 3:2000 "Code of Practice for Design of Steel Bridges" as implemented by Departmental Standard BD 13/06. The proforma checks flanges for compliance with the shape limitations to Clause 9.3.2 and requirements for a compact section to Clause 9.3.7.3.1 or 9.3.7.3.
Flange outstands in compression (Clause 9.3.2.1).
Flange comprises multiple flange plates welded to web. Clause 9.3.2.2.
Flange plates welded along edges.

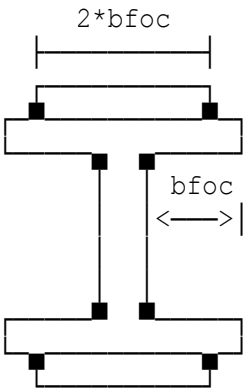

Mean thickness tfoc of outer plate

Mean thickness tfoc of inner plate

Where a flange consists of several flange plates built-up and connected to each other only by welds at their edges, an outer flange plate should not be thicker than an inner plate. For the flange plate connected to the web, bfoc should be taken as the width of the outstand measured from the edge to the surface of the web. For all other plates bfoc should be taken as half the width between the welds connecting it to an inner plate.

Maximum value of bfo/tfo ratio1=bfoc/tfoc=6.0606
Nominal comp yield stress σy syc=345 N/mm²
Flange outstands in tension. Clause 9.3.2.2.
Flange comprises multiple flange plates welded to web. Clause 9.3.2.2.
Flange plates welded along edges.
Where a flange consists of several flange plates built-up and connected to each other only by welds at their edges, an outer flange plate should not be thicker than an inner plate. For the flange plate connected to the web, bfot should be taken as the width of the outstand measured from the edge to the surface of the web.
For all other plates bfot should be taken as half the width between the welds connecting it to an inner plate.

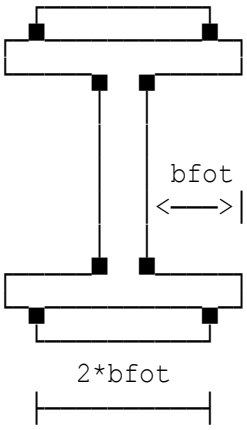

Mean thickness of inner plate tfot

Mean thickness of outer plate tfot

Maximum value of bfo/tfo	ratio2=bfot/tfot=6.0606
Nominal tensile yield stress σy	syt=345 N/mm²

RESULTS FROM CALCULATION

Flange outstands in compression comply with Clause 9.3.2.1
with nominal yield compressive stress of 345 N/mm².
Flange outstands in tension comply with Clause 9.3.2.2
with nominal yield tensile stress of 345 N/mm².
Compact sections. Clause 9.3.7.
Multiple flange plates welded to web:

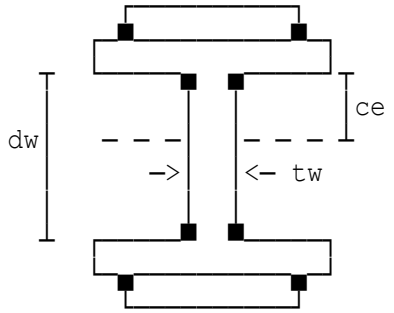

Compression flange

Plastic Neutral Axis

Depths ce and dw should be taken
clear of the web to flange welds.

Thickness of web plate	tw=12 mm
Dimension ce	ce=620 mm
Depth of web	dw=1240 mm
Nominal tensile yield stress σy	syw=355 N/mm²
Nominal tensile yield stress σy	syf=345 N/mm²

RESULTS SUMMARY

Web does not comply with Clause 9.3.7.2.
Compression flange outstands comply with Clause 9.3.7.3.1.
Section is not compact.

Location: Ex1 - Girder A

Shape limitations for flanges

Flanges and webs - Requirements for compact section

The proforma is in accordance with BS EN 1993-2:2006 "Eurocode 3 Design of Steel Structures - Part 2: Steel bridges" and the NA to BS EN 1993-2:2006

Flange outstands in compression. Flange plates welded to web along edges:

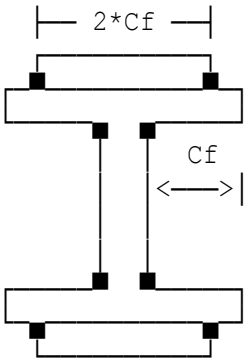

Mean thickness tf of outer plate

Mean thickness tf of inner plate

Where a flange consists of several flange plates built-up and connected to each other only by welds at their edges, an outer flange plate should not be thicker than an inner plate. For the flange plate connected to the web, Cf should be taken as the width of the outstand measured from the edge to the toe of root fillet. For all other plates, Cf should be taken as half the width between the welds connecting it to an inner plate.

Dimension of outstand	Cf=200 mm
Mean thickness of plate	tf=33 mm
Web depth between root fillets	Cw=1240 mm
Thickness of web	tw=12 mm
Yield strength	fy=345 N/mm²
Design axial load	NEd=0 kN

Section classification

Classify outstand element of compression flange:

Outstand	c=Cf=200 mm
Ratio	c't=c/tf=6.0606

As c/tf ≤ 9e (6.0606 ≤ 7.4279), outstand element of compression flange is classified as Class 1 plastic.

Classify web element of section:

Ratio	C't=Cw/tw=103.33

As Cw/tw > 124e (103.33 > 102.34), web element in bending is classified as Class 4 slender.

Location: Ex2 - Girder A

Shape limitations for flanges

Flanges and webs - Requirements for compact section

The proforma is in accordance with BS EN 1993-2:2006 "Eurocode 3 Design of Steel Structures - Part 2: Steel bridges" and the NA to BS EN 1993-2:2006

Flange outstands in compression. Flange plates bolted to the web:

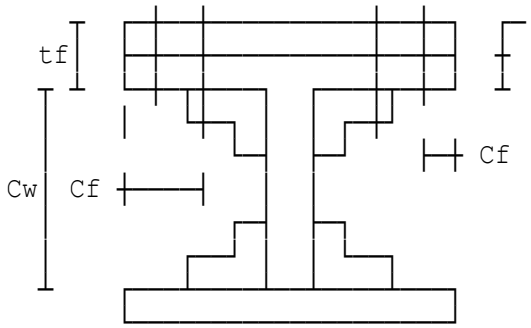

Thickness tf is the mean thickness of the outstand

Dimension Cf is the width of the outstand measured from the edge to the nearest line of bolts connecting it to the supporting part of the member.

Dimension of outstand	Cf=200 mm
Mean thickness of plate	tf=33 mm
Web depth between root fillets	Cw=1000 mm
Thickness of web	tw=12 mm
Yield strength	fy=345 N/mm²
Design axial load	NEd=0 kN

Section classification

Classify outstand element of compression flange:
Outstand c=Cf=200 mm
Ratio c't=c/tf=6.0606
As c/tf ≤ 9e (6.0606 ≤ 7.4279), outstand element of compression flange is classified as Class 1 plastic.
Classify web element of section:
Ratio C't=Cw/tw=83.333
As Cw/tw ≤ 124e (83.333 ≤ 102.34), web element in bending is classified as Class 3 semi-compact.

Location: Ex3 - Girder A

Shape limitations for flanges

Flanges and webs - Requirements for compact section

The proforma is in accordance with BS EN 1993-2:2006 "Eurocode 3 Design of Steel Structures - Part 2: Steel bridges" and the NA to BS EN 1993-2:2006

Flange outstands in compression. Single flange plate welded to web:

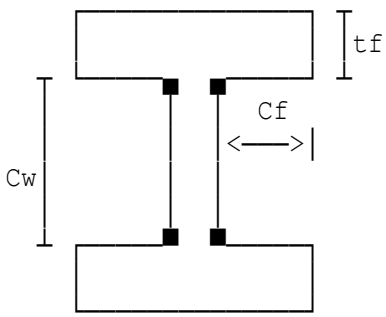

Thickness tf is the mean thickness of the outstand

Dimension Cf is the width of the outstand measured from the edge to the toe of root fillet

Dimension Cw is the web depth between root fillets

Dimension of outstand	Cf=200 mm
Thickness of flange plate	tf=25 mm
Web depth between root fillets	Cw=1000 mm
Thickness of web	tw=12 mm
Yield strength	fy=345 N/mm²
Design axial load	NEd=50 kN

Section classification

Classify outstand element of compression flange:

Parameter (Table 5)	e=(235/fy)^0.5=0.82532
Outstand	c=Cf=200 mm
Ratio	c't=c/tf=8

Classify web element of section:

Depth between fillets	d=Cw=1000 mm
Ratio	c'tw=d/tw=83.333
Area of section	A=5800 mm²
Limiting ratio	c't3=42*e/(0.67+0.33*psic)=101.9

Web is Class 3 semi-compact

Location: Ex4 - Girder A

Shape limitations for flanges

Flanges and webs - Requirements for compact section

The proforma is in accordance with BS EN 1993-2:2006 "Eurocode 3 Design of Steel Structures - Part 2: Steel bridges" and the NA to BS EN 1993-2:2006

Flange outstands in compression. Rolled section:

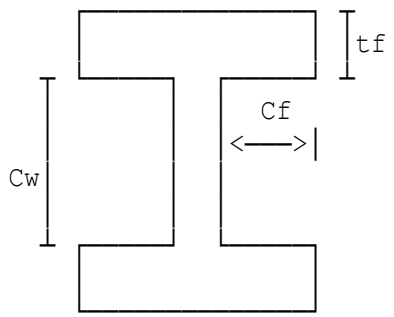

Thickness tf is the thickness of plate

Dimension Cf is the width of the outstand measured from the edge to the toe of root fillet

Dimension Cw is the web depth between root fillets

Dimension of outstand	Cf=200 mm
Thickness of flange plate	tf=25 mm
Web depth between root fillets	Cw=600 mm
Thickness of web	tw=12 mm
Yield strength	fy=345 N/mm²
Design axial load	NEd=100 kN

Section classification

Classify outstand element of compression flange:

Parameter (Table 5)	e=(235/fy)^0.5=0.82532
Outstand	c=Cf=200 mm
Ratio	c't=c/tf=8

Classify web element of section:

Depth between fillets	d=Cw=600 mm
Ratio	c'tw=d/tw=50
Limiting ratio	c't1=396*e/(13*ad-1)=56.725

Web is Class 1 plastic.

Location: Ex1 - Girder W

Openings in webs and compression flanges

The calculations are in accordance with BS5400:Part 3:2000 "Code of Practice for Design of Steel Bridges" as implemented by Departmental Standard BD 13/06.
The proforma outlines the requirements from Clause 9.3.3.

Openings in webs or compression members (Clause 9.3.3)

Clause 9.3.3.1 (General)

Any openings in webs or compression flanges should be framed and the stiffened section designed for local load effects, including secondary bending. Alternatively, openings in webs may be unstiffened provided that they meet the provisions of Clause 9.3.3.2.
All corners should be rounded with a radius of at least one-quarter of the least dimension of the hole.

Openings in webs or compression members (Clause 9.3.3)

Clause 9.3.3.2 (Unstiffened openings in webs)

Openings in a web may be unstiffened provided the following conditions are met:

- the overall greatest internal dimension does not exceed one-tenth of the depth of the web, nor, for longitudinally stiffened webs, one-third of the depth of the panel containing the opening

- the longitudinal distance between the boundaries of adjacent openings is at least three times the maximum internal dimension

- not more than one opening is provided at any cross-section.

Cut outs provided for transverse stiffeners should either have at least one-third of their perimeters welded to stiffeners, or the stiffeners should be cleated to the web with at least two bolts or rivets per side of the connection or by full perimeter welding of the cleat.

Location: Ex1 - Web opening

Openings in beam webs

The proforma is in accordance with BS EN 1993-2:2006 "Eurocode 3 Design of Steel Structures - Part 2: Steel bridges", SCI P355, NA to BS EN 1993-2:2006 and "Access Steel" NCCI: Design rules for web openings in beams SN019b-EN-EU.

Openings in beam webs based on "Access Steel" NCCI SN019b-EN-EU

Reinforced openings

Any openings in beam webs should be reinforced and the stiffened section designed for local load effects, including secondary bending. Reinforced openings should satisfy the following conditions:

1. The minimum projection of the stiffeners past the opening should be at least 20 times the thickness of the stiffener.
2. The stiffener projection from the face of the web should not exceed 10 x thickness of the stiffener.
3. The distance between edges of openings should be at least 1.5 times the length of the longer opening.
4. All corners should be rounded with a radius of at least one-quarter of the least dimension of the hole.
5. The length of the opening should not exceed 2.5 x opening depth.
6. The distance of any part of the opening to the nearest point load should not be less than half the depth of the member.

Openings in webs based on "Access Steel" NCCI SN019b-EN-EU

Unreinforced openings

Openings in a web may be unreinforced (unstiffened) provided the following conditions are met:

1. The depth of the opening should not exceed 0.6 x beam depth.
2. The length of the opening should not exceed 1.5 x opening depth.
3. The distance between edges of openings should be at least 1.5 times the length of the longer opening.
4. Not more than one opening is provided at any cross-section.
5. Opening not to be closer than twice the beam depth from support.
6. The distance of any part of the opening to the nearest point load should not be less than the depth of the member.

Cut outs provided for transverse stiffeners should either have at least one-third of their perimeters welded to stiffeners, or the stiffeners should be cleated to the web with at least two bolts or rivets per side of the connection or by full perimeter welding of the cleat.

Location: Ex1 - Internal beam

Shape limitations for flat stiffeners (Clause 9.3.4.1.2)

The calculations are in accordance with BS 5400:Part 3:2000 "Code of Practice for Design of Steel Bridges"as implemented by Departmental Standard BD 13/06.
Stiffeners to webs and compression flanges. Clause 9.3.4.

Flat stiffeners (Clause 9.3.4.1.2):

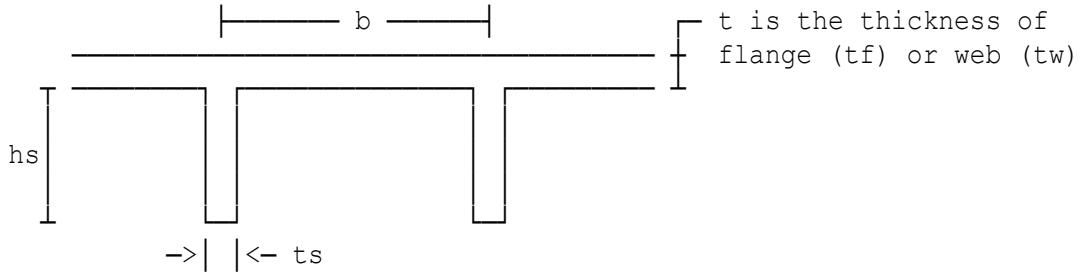

Geometric Notation Figure 1

Dimension b is the spacing of stiffeners or distance between stiffener and the beam flange/web boundary, as appropriate. In the case of a non-uniform spacing the average value on the two sides may be taken.

Depth of stiffener	hs=100 mm
Stiffener thickness	ts=8 mm
Spacing of stiffeners	b=200 mm
Plate thickness (tf or tw)	t=20 mm

Ratio $(b/t)\sqrt{(\sigma y/355)}=9.8581$ is less than 31.
Ratio $(hs/ts)\sqrt{(\sigma ys/355)}=12.5$ is less than limit 19.624.
Stiffener complies with Clause 9.3.4.1.2.

Location: Internal beam

Shape limitations for flat stiffeners (Clause 9.3.4.1.2)

The calculations are in accordance with BS 5400:Part 3:2000 "Code of Practice for Design of Steel Bridges"as implemented by Departmental Standard BD 13/06.
Stiffeners to webs and compression flanges. Clause 9.3.4.

Flat stiffeners (Clause 9.3.4.1.2):

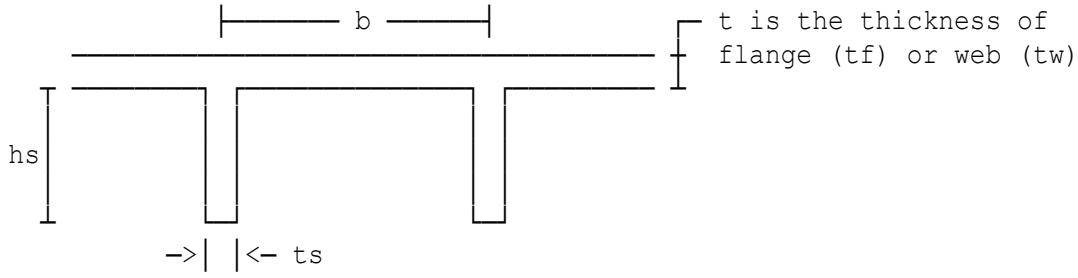

Geometric Notation Figure 1

Dimension b is the spacing of stiffeners or distance between stiffener and the beam flange/web boundary, as appropriate. In the case of a non-uniform spacing the average value on the two sides may be taken.

Depth of stiffener	hs=100 mm
Stiffener thickness	ts=8 mm
Spacing of stiffeners	b=200 mm
Plate thickness (tf or tw)	t=8 mm

Ratio $(b/t)\sqrt{(\sigma y/355)}=25$ is less than 31.
Ratio $(hs/ts)\sqrt{(\sigma ys/355)}=12.5$ exceeds limit 11.025.
Stiffener does not comply with Clause 9.3.4.1.2.

Location: Internal beam

Shape limitations for flat stiffeners (Clause 9.3.4.1.2)

The calculations are in accordance with BS 5400:Part 3:2000 "Code of Practice for Design of Steel Bridges"as implemented by Departmental Standard BD 13/06.
Stiffeners to webs and compression flanges. Clause 9.3.4.

Flat stiffeners (Clause 9.3.4.1.2):

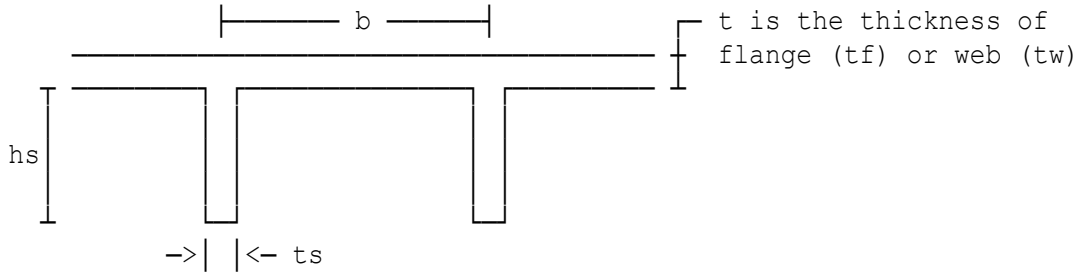

Geometric Notation Figure 1

Dimension b is the spacing of stiffeners or distance between stiffener and the beam flange/web boundary, as appropriate. In the case of a non-uniform spacing the average value on the two sides may be taken.

Depth of stiffener	hs=100 mm
Stiffener thickness	ts=12 mm
Spacing of stiffeners	b=200 mm
Plate thickness (tf or tw)	t=8 mm

Ratio (hs/ts)√(σys/355)=8.3333 is not greater than limit 10.
Stiffener complies with Clause 9.3.4.1.2.

Location: Internal beam

Shape limitations for flat stiffeners (Clause 9.3.4.1.2)

The calculations are in accordance with BS 5400:Part 3:2000 "Code of Practice for Design of Steel Bridges"as implemented by Departmental Standard BD 13/06.
Stiffeners to webs and compression flanges. Clause 9.3.4.

Flat stiffeners (Clause 9.3.4.1.2):

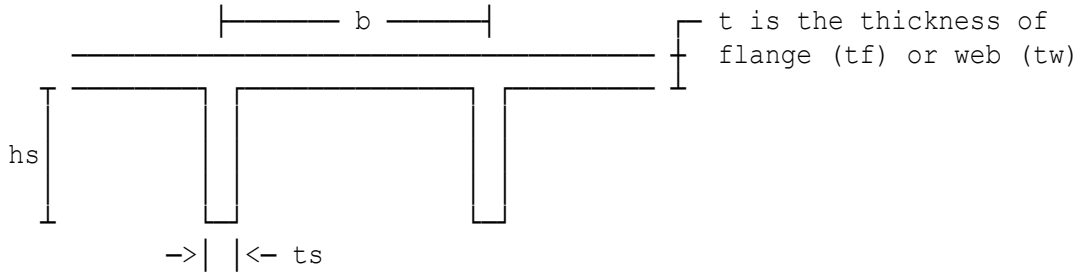

Geometric Notation Figure 1

Dimension b is the spacing of stiffeners or distance between stiffener and the beam flange/web boundary, as appropriate. In the case of a non-uniform spacing the average value on the two sides may be taken.

Depth of stiffener	hs=120 mm
Stiffener thickness	ts=3 mm
Spacing of stiffeners	b=200 mm
Plate thickness (tf or tw)	t=5 mm

Ratio (hs/ts)√(σys/355)=40 exceeds limiting Fig. 2 value 33.
Stiffener does not comply with Clause 9.3.4.1.2.

Location: Internal beam

Shape limitations for flat stiffeners (Clause 9.3.4.1.2)

The calculations are in accordance with BS 5400:Part 3:2000 "Code of Practice for Design of Steel Bridges"as implemented by Departmental Standard BD 13/06.
Stiffeners to webs and compression flanges. Clause 9.3.4.

Flat stiffeners (Clause 9.3.4.1.2):

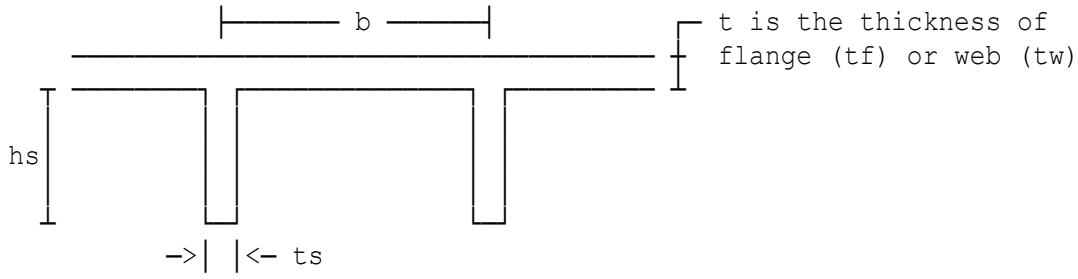

Geometric Notation Figure 1

Dimension b is the spacing of stiffeners or distance between stiffener and the beam flange/web boundary, as appropriate. In the case of a non-uniform spacing the average value on the two sides may be taken.

Depth of stiffener	hs=100 mm
Stiffener thickness	ts=5 mm
Spacing of stiffeners	b=20 mm
Plate thickness (tf or tw)	t=2 mm

Ratio $(bt/ts^2)\sqrt{(\sigma ys/355)}=1.6$ is less than limiting Fig. 2 value 5.
Stiffener does not comply with Clause 9.3.4.1.2.

Location: Internal beam

Shape limitations for flat stiffeners (Clause 9.3.4.1.2)

The calculations are in accordance with BS 5400:Part 3:2000 "Code of Practice for Design of Steel Bridges"as implemented by Departmental Standard BD 13/06.
Stiffeners to webs and compression flanges. Clause 9.3.4.

Flat stiffeners (Clause 9.3.4.1.2):

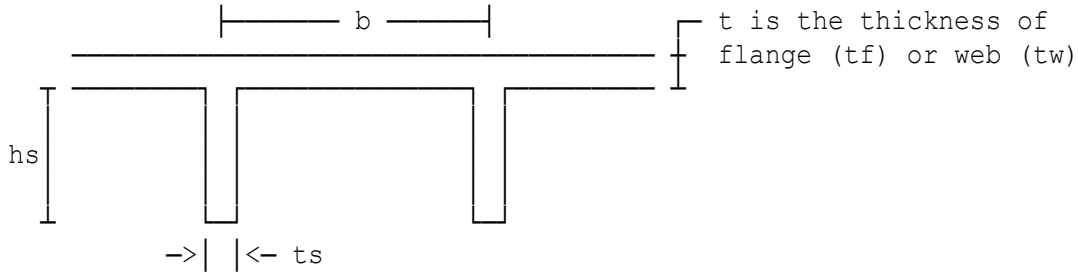

Geometric Notation Figure 1

Dimension b is the spacing of stiffeners or distance between stiffener and the beam flange/web boundary, as appropriate. In the case of a non-uniform spacing the average value on the two sides may be taken.

Depth of stiffener	hs=100 mm
Stiffener thickness	ts=5 mm
Spacing of stiffeners	b=1000 mm
Plate thickness (tf or tw)	t=5 mm

Ratio (bt/ts^2)√(σys/355)=200 exceeds limiting Fig. 2 value 160.
Stiffener does not comply with Clause 9.3.4.1.2.

Location: Internal beam

Shape limitations for flat stiffeners (Clause 9.3.4.1.2)

The calculations are in accordance with BS 5400:Part 3:2000 "Code of Practice for Design of Steel Bridges"as implemented by Departmental Standard BD 13/06.
Stiffeners to webs and compression flanges. Clause 9.3.4.

Flat stiffeners (Clause 9.3.4.1.2):

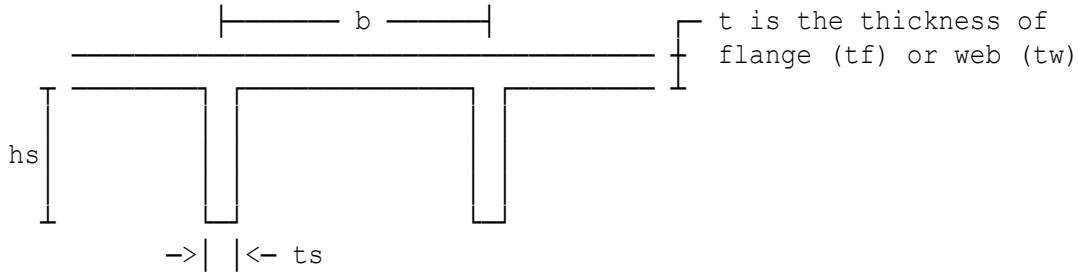

Geometric Notation Figure 1

Dimension b is the spacing of stiffeners or distance between stiffener and the beam flange/web boundary, as appropriate. In the case of a non-uniform spacing the average value on the two sides may be taken.

Depth of stiffener	hs=100 mm
Stiffener thickness	ts=8 mm
Spacing of stiffeners	b=200 mm
Plate thickness (tf or tw)	t=5 mm

Ratio $(b/t)\sqrt{(\sigma y/355)}=40$ exceeds 31.
Ratio $(hs/ts)\sqrt{(\sigma ys/355)}=12.5$ exceeds 10
Stiffener does not comply with Clause 9.3.4.1.2.

Location: Ex1 - Internal beam

Shape limitations for flat stiffeners

The calculations are in accordance with BS EN 1993-1-5:2006 "Eurocode 3: Design of steel structures" Part 1-5: Plated structural elements and NA to BS EN 1993-1-5:2006.

Stiffeners to webs and compression flanges (Clause 9.2.1).

Flat stiffeners (Clause 9.2.1(8)):

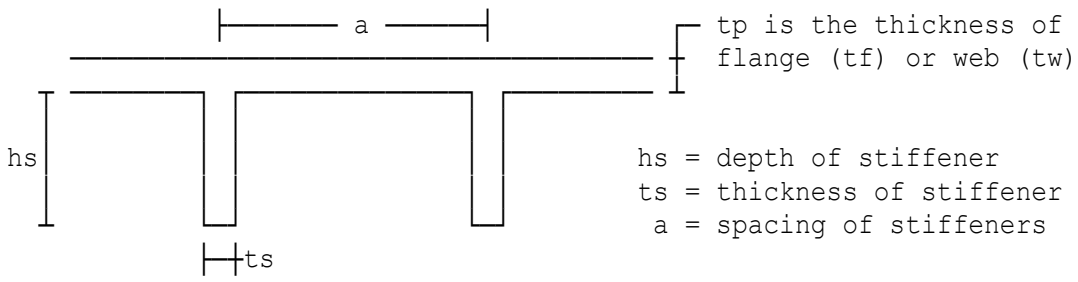

Geometric Notation Figure 1

Dimension a is the spacing of stiffeners or distance between stiffener and the beam flange/web boundary, as appropriate. In the case of a non-uniform spacing the average value on the two sides may be taken.

Depth of stiffener	hs=100 mm
Stiffener thickness	ts=10 mm
Spacing of stiffeners	a=200 mm
Plate thickness (tf or tw)	tp=20 mm
Plate yield strength	fyp=345 N/mm²
Stiffener yield strength	fys=355 N/mm²

Limiting outstand to prevent torsional buckling - Clause 9.2.1(8)

Ratio (hs/ts) p=hs/ts=10
Limit to ratio p=(hs/ts) is 13ε=10.577.
Ratio (hs/ts)=10 is not greater than limit 13ε=10.577.
Stiffener complies with Clause 9.2.1(8).

Stiffness check - Clause 9.3.3(3)

Stiffener length/depth	hw=225 mm
2nd moment of area provided	Ipro=3.8467E6 mm⁴
2nd moment of area required	Ist=1.5*hw^3*tp^3/a^2=3.4172E6 mm⁴

As Ist ≤ Ipro (3.4172E6 mm⁴ ≤ 3.8467E6 mm⁴), the stiffener is OK.

Location: Internal beam

Shape limitations for flat stiffeners

The calculations are in accordance with BS EN 1993-1-5:2006 "Eurocode 3: Design of steel structures" Part 1-5: Plated structural elements and NA to BS EN 1993-1-5:2006.

Stiffeners to webs and compression flanges (Clause 9.2.1).

Flat stiffeners (Clause 9.2.1(8)):

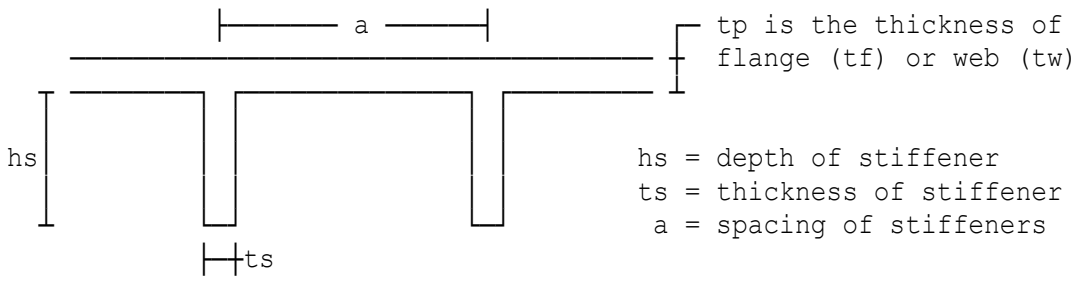

Geometric Notation Figure 1

Dimension a is the spacing of stiffeners or distance between stiffener and the beam flange/web boundary, as appropriate. In the case of a non-uniform spacing the average value on the two sides may be taken.

Depth of stiffener	hs=100 mm
Stiffener thickness	ts=10 mm
Spacing of stiffeners	a=200 mm
Plate thickness (tf or tw)	tp=8 mm
Plate yield strength	fyp=355 N/mm²
Stiffener yield strength	fys=355 N/mm²

Limiting outstand to prevent torsional buckling - Clause 9.2.1(8)

Ratio (hs/ts) p=hs/ts=10
Limit to ratio p=(hs/ts) is 13ε=10.577.
Ratio (hs/ts)=10 is not greater than limit 13ε=10.577.
Stiffener complies with Clause 9.2.1(8).

Stiffness check - Clause 9.3.3(3)

Stiffener length/depth	hw=500 mm
2nd moment of area provided	Ipro=2.6363E6 mm⁴
2nd moment of area required	Ist=1.5*hw^3*tp^3/a^2=2.4E6 mm⁴

As Ist ≤ Ipro (2.4E6 mm⁴ ≤ 2.6363E6 mm⁴), the stiffener is OK.

Location: Internal beam

Shape limitations for flat stiffeners

The calculations are in accordance with BS EN 1993-1-5:2006 "Eurocode 3: Design of steel structures" Part 1-5: Plated structural elements and NA to BS EN 1993-1-5:2006.

Stiffeners to webs and compression flanges (Clause 9.2.1).

Flat stiffeners (Clause 9.2.1(8)):

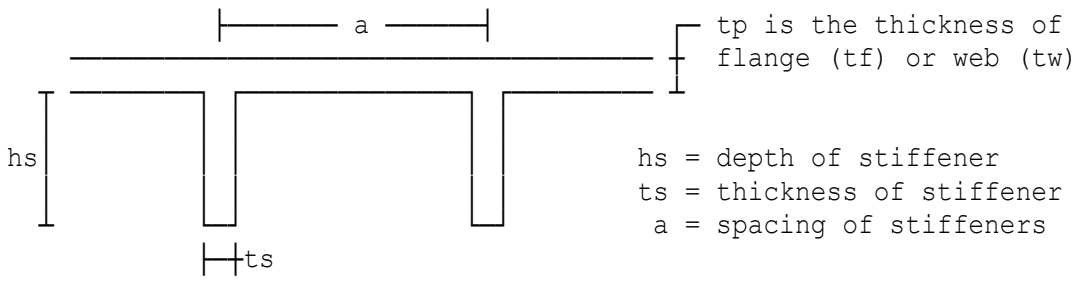

Geometric Notation Figure 1

Dimension a is the spacing of stiffeners or distance between stiffener and the beam flange/web boundary, as appropriate. In the case of a non-uniform spacing the average value on the two sides may be taken.

Depth of stiffener	hs=100 mm
Stiffener thickness	ts=10 mm
Spacing of stiffeners	a=200 mm
Plate thickness (tf or tw)	tp=8 mm
Plate yield strength	fyp=355 N/mm²
Stiffener yield strength	fys=355 N/mm²

Limiting outstand to prevent torsional buckling - Clause 9.2.1(8)

Ratio (hs/ts) p=hs/ts=10
Limit to ratio p=(hs/ts) is 13ε=10.577.
Ratio (hs/ts)=10 is not greater than limit 13ε=10.577.
Stiffener complies with Clause 9.2.1(8).

Stiffness check - Clause 9.3.3(3)

Stiffener length/depth	hw=400 mm
2nd moment of area provided	Ipro=2.6363E6 mm⁴
2nd moment of area required	Ist=1.5*hw^3*tp^3/a^2=1.2288E6 mm⁴

As Ist ≤ Ipro (1.2288E6 mm⁴ ≤ 2.6363E6 mm⁴), the stiffener is OK.

Location: Internal beam

Shape limitations for flat stiffeners

The calculations are in accordance with BS EN 1993-1-5:2006 "Eurocode 3: Design of steel structures" Part 1-5: Plated structural elements and NA to BS EN 1993-1-5:2006.

Stiffeners to webs and compression flanges (Clause 9.2.1).

Flat stiffeners (Clause 9.2.1(8)):

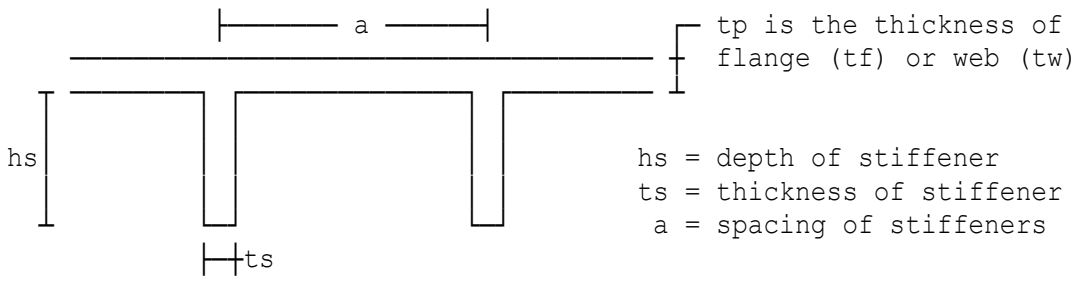

Geometric Notation Figure 1

Dimension a is the spacing of stiffeners or distance between stiffener and the beam flange/web boundary, as appropriate. In the case of a non-uniform spacing the average value on the two sides may be taken.

Depth of stiffener	hs=120 mm
Stiffener thickness	ts=12 mm
Spacing of stiffeners	a=200 mm
Plate thickness (tf or tw)	tp=5 mm
Plate yield strength	fyp=355 N/mm²
Stiffener yield strength	fys=355 N/mm²

Limiting outstand to prevent torsional buckling - Clause 9.2.1(8)

Ratio (hs/ts) p=hs/ts=10
Limit to ratio p=(hs/ts) is 13ε=10.577.
Ratio (hs/ts)=10 is not greater than limit 13ε=10.577.
Stiffener complies with Clause 9.2.1(8).

Stiffness check - Clause 9.3.3(3)

Stiffener length/depth	hw=600 mm
2nd moment of area provided	Ipro=3.5159E6 mm⁴
2nd moment of area required	Ist=1.5*hw^3*tp^3/a^2=1.0125E6 mm⁴

As Ist ≤ Ipro (1.0125E6 mm⁴ ≤ 3.5159E6 mm⁴), the stiffener is OK.

Location: Internal beam

Shape limitations for flat stiffeners

The calculations are in accordance with BS EN 1993-1-5:2006 "Eurocode 3: Design of steel structures" Part 1-5: Plated structural elements and NA to BS EN 1993-1-5:2006.

Stiffeners to webs and compression flanges (Clause 9.2.1).

Flat stiffeners (Clause 9.2.1(8)):

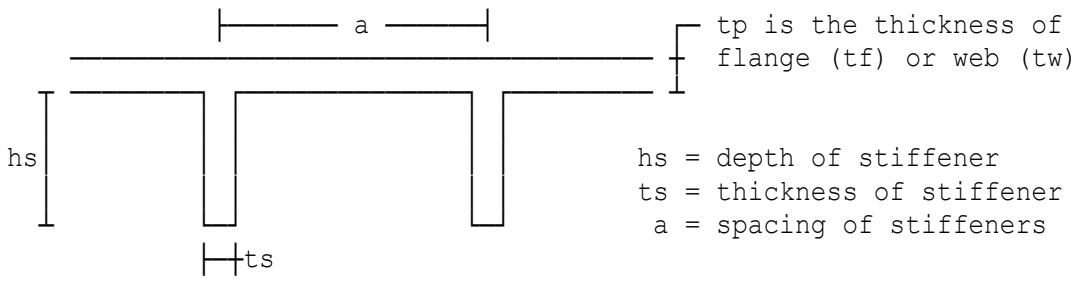

Geometric Notation Figure 1

Dimension a is the spacing of stiffeners or distance between stiffener and the beam flange/web boundary, as appropriate. In the case of a non-uniform spacing the average value on the two sides may be taken.

Depth of stiffener	hs=100 mm
Stiffener thickness	ts=10 mm
Spacing of stiffeners	a=200 mm
Plate thickness (tf or tw)	tp=5 mm
Plate yield strength	fyp=355 N/mm²
Stiffener yield strength	fys=355 N/mm²

Limiting outstand to prevent torsional buckling - Clause 9.2.1(8)

Ratio (hs/ts) p=hs/ts=10
Limit to ratio p=(hs/ts) is 13ε=10.577.
Ratio (hs/ts)=10 is not greater than limit 13ε=10.577.
Stiffener complies with Clause 9.2.1(8).

Stiffness check - Clause 9.3.3(3)

Stiffener length/depth	hw=300 mm
2nd moment of area provided	Ipro=1.9308E6 mm⁴
2nd moment of area required	Ist=1.5*hw^3*tp^3/a^2=126563 mm⁴

As Ist ≤ Ipro (126563 mm⁴ ≤ 1.9308E6 mm⁴), the stiffener is OK.

Location: Internal beam

Shape limitations for flat stiffeners

The calculations are in accordance with BS EN 1993-1-5:2006 "Eurocode 3: Design of steel structures" Part 1-5: Plated structural elements and NA to BS EN 1993-1-5:2006.

Stiffeners to webs and compression flanges (Clause 9.2.1).

Flat stiffeners (Clause 9.2.1(8)):

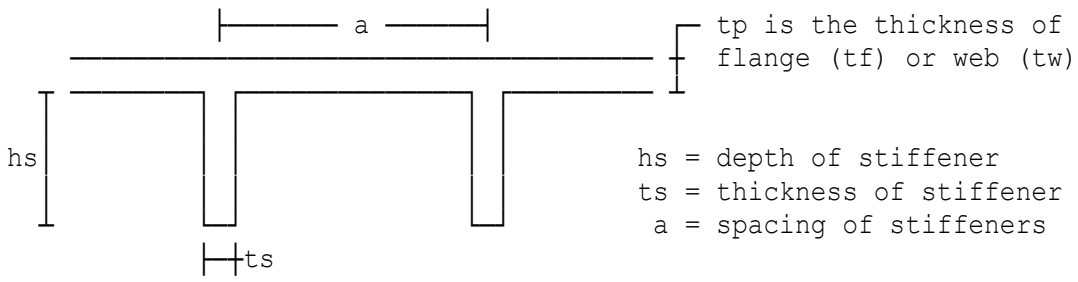

Geometric Notation Figure 1

Dimension a is the spacing of stiffeners or distance between stiffener and the beam flange/web boundary, as appropriate. In the case of a non-uniform spacing the average value on the two sides may be taken.

Depth of stiffener	hs=100 mm
Stiffener thickness	ts=10 mm
Spacing of stiffeners	a=1000 mm
Plate thickness (tf or tw)	tp=5 mm
Plate yield strength	fyp=355 N/mm²
Stiffener yield strength	fys=355 N/mm²

Limiting outstand to prevent torsional buckling - Clause 9.2.1(8)

Ratio (hs/ts) p=hs/ts=10
Limit to ratio p=(hs/ts) is 13ε=10.577.
Ratio (hs/ts)=10 is not greater than limit 13ε=10.577.
Stiffener complies with Clause 9.2.1(8).

Stiffness check - Clause 9.3.3(3)

Stiffener length/depth	hw=700 mm
2nd moment of area provided	Ipro=1.9308E6 mm⁴
2nd moment of area required	Ist=0.75*hw*tp^3=65625 mm⁴

As Ist ≤ Ipro (65625 mm⁴ ≤ 1.9308E6 mm⁴), the stiffener is OK.

Location: Internal beam

Shape limitations for flat stiffeners

The calculations are in accordance with BS EN 1993-1-5:2006 "Eurocode 3: Design of steel structures" Part 1-5: Plated structural elements and NA to BS EN 1993-1-5:2006.

Stiffeners to webs and compression flanges (Clause 9.2.1).

Flat stiffeners (Clause 9.2.1(8)):

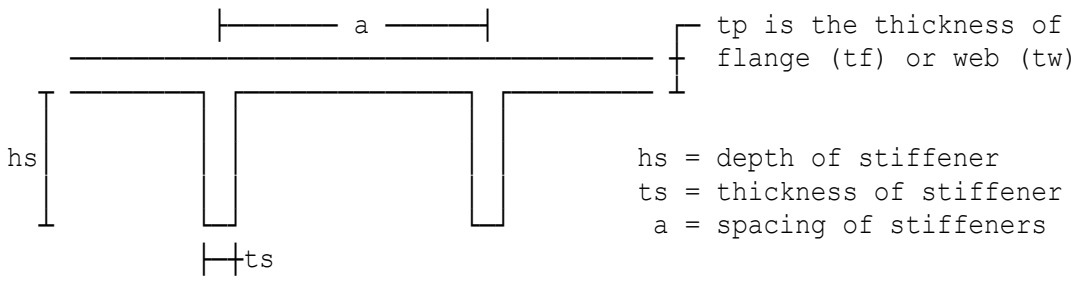

Geometric Notation Figure 1

Dimension a is the spacing of stiffeners or distance between stiffener and the beam flange/web boundary, as appropriate. In the case of a non-uniform spacing the average value on the two sides may be taken.

Depth of stiffener	hs=100 mm
Stiffener thickness	ts=10 mm
Spacing of stiffeners	a=200 mm
Plate thickness (tf or tw)	tp=5 mm
Plate yield strength	fyp=355 N/mm²
Stiffener yield strength	fys=355 N/mm²

Limiting outstand to prevent torsional buckling - Clause 9.2.1(8)

Ratio (hs/ts) p=hs/ts=10
Limit to ratio p=(hs/ts) is 13ε=10.577.
Ratio (hs/ts)=10 is not greater than limit 13ε=10.577.
Stiffener complies with Clause 9.2.1(8).

Stiffness check - Clause 9.3.3(3)

Stiffener length/depth	hw=700 mm
2nd moment of area provided	Ipro=1.9308E6 mm⁴
2nd moment of area required	Ist=1.5*hw^3*tp^3/a^2=1.6078E6 mm⁴

As Ist ≤ Ipro (1.6078E6 mm⁴ ≤ 1.9308E6 mm⁴), the stiffener is OK.

Location: Ex8 - SCI P357 page 62

Shape limitations for flat stiffeners

The calculations are in accordance with BS EN 1993-1-5:2006 "Eurocode 3: Design of steel structures" Part 1-5: Plated structural elements and NA to BS EN 1993-1-5:2006.

Stiffeners to webs and compression flanges (Clause 9.2.1).

Flat stiffeners (Clause 9.2.1(8)):

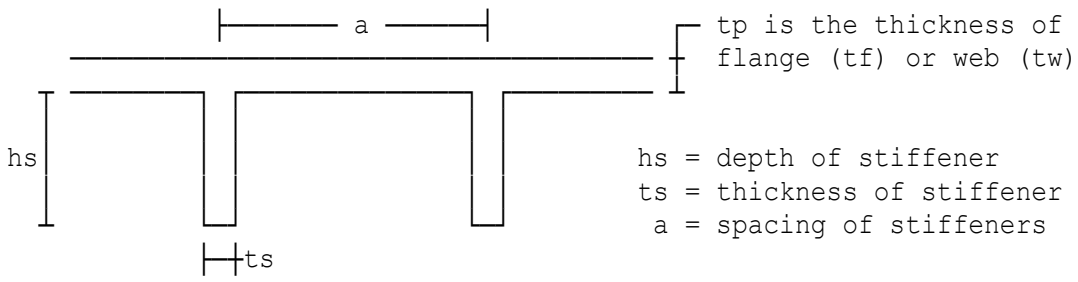

Geometric Notation Figure 1

Dimension a is the spacing of stiffeners or distance between stiffener and the beam flange/web boundary, as appropriate. In the case of a non-uniform spacing the average value on the two sides may be taken.

Depth of stiffener	hs=200 mm
Stiffener thickness	ts=20 mm
Spacing of stiffeners	a=1967 mm
Plate thickness (tf or tw)	tp=14 mm
Plate yield strength	fyp=355 N/mm²
Stiffener yield strength	fys=345 N/mm²

Limiting outstand to prevent torsional buckling - Clause 9.2.1(8)

Ratio (hs/ts) p=hs/ts=10
Limit to ratio p=(hs/ts) is 13ε=10.729.
Ratio (hs/ts)=10 is not greater than limit 13ε=10.729.
Stiffener complies with Clause 9.2.1(8).

Stiffness check - Clause 9.3.3(3)

Stiffener length/depth	hw=1000 mm
2nd moment of area provided	Ipro=39.002E6 mm⁴
2nd moment of area required	Ist=0.75*hw*tp^3=2.058E6 mm⁴

As Ist ≤ Ipro (2.058E6 mm⁴ ≤ 39.002E6 mm⁴), the stiffener is OK.

Location: Ex1 - Stiffeners to plate A

Shape limitations for bulb flat stiffeners (Clause 9.3.4.1.3)

The calculations are in accordance with BS 5400:Part 3:2000 "Code of Practice for Design of Steel Bridges" as implemented by Departmental Standard BD 13/06.
Stiffeners to webs and compression flanges (Clause 9.3.4).
Bulb flat stiffeners (Clause 9.3.4.1.3):

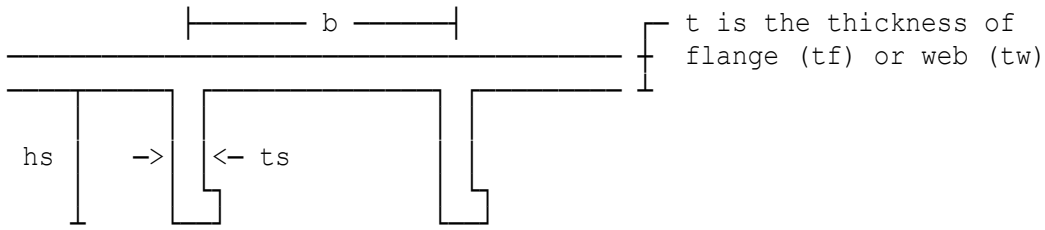

Geometric Notation Figure 1

Dimension b is the spacing of stiffeners or distance between the stiffener and beam flange/web boundary, as appropriate. In the case of non-uniform spacing the average value on the two sides may be taken.

Depth of stiffener	hs=100 mm
Span of stiffener between members	ls=250 mm
Spacing of stiffeners	b=200 mm
Plate thickness (tf or tw)	t=10 mm
Stiffener thickness	ts=10 mm

Factor ks ks=0.4

Ratio ls/hs=2.5 does not exceed 3√(355/σys)=3.
Ratio ((b+ks*hs)/t)*√(σy/355)=24 does not exceed 30.0.
Stiffener complies with Clause 9.3.4.1.3.

Location: Stiffeners to plate A

Shape limitations for bulb flat stiffeners (Clause 9.3.4.1.3)

The calculations are in accordance with BS 5400:Part 3:2000 "Code of Practice for Design of Steel Bridges" as implemented by Departmental Standard BD 13/06.
Stiffeners to webs and compression flanges (Clause 9.3.4).
Bulb flat stiffeners (Clause 9.3.4.1.3):

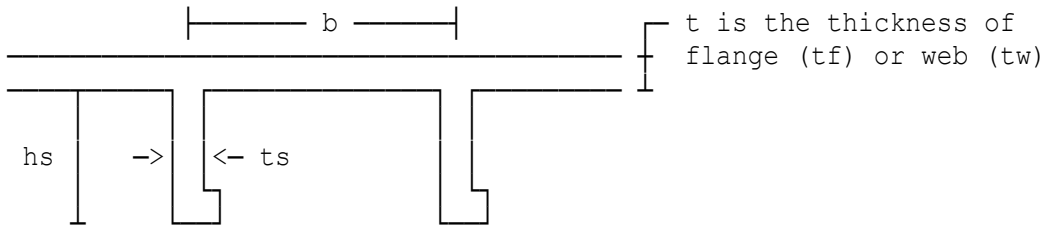

Geometric Notation Figure 1

Dimension b is the spacing of stiffeners or distance between the stiffener and beam flange/web boundary, as appropriate. In the case of non-uniform spacing the average value on the two sides may be taken.

Depth of stiffener	hs=100 mm
Span of stiffener between members	ls=250 mm
Spacing of stiffeners	b=300 mm
Plate thickness (tf or tw)	t=10 mm
Stiffener thickness	ts=10 mm

Factor ks ks=0.4

Ratio ls/hs=2.5 does not exceed 3√(355/σys)=3.
Ratio ((b+ks*hs)/t)*√(σy/355)=34 exceeds 30.0.
Stiffener complies with Clause 9.3.4.1.3.

Location: Stiffeners to plate A

Shape limitations for bulb flat stiffeners (Clause 9.3.4.1.3)

The calculations are in accordance with BS 5400:Part 3:2000 "Code of Practice for Design of Steel Bridges" as implemented by Departmental Standard BD 13/06.
Stiffeners to webs and compression flanges (Clause 9.3.4).
Bulb flat stiffeners (Clause 9.3.4.1.3):

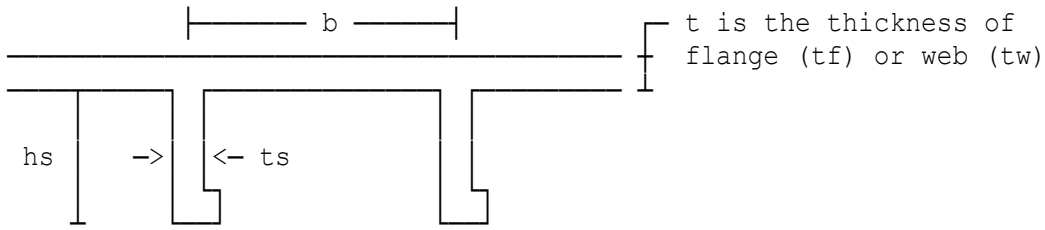

Geometric Notation Figure 1

Dimension b is the spacing of stiffeners or distance between the stiffener and beam flange/web boundary, as appropriate. In the case of non-uniform spacing the average value on the two sides may be taken.

Depth of stiffener	hs=20 mm
Span of stiffener between members	ls=100 mm
Spacing of stiffeners	b=200 mm
Plate thickness (tf or tw)	t=10 mm
Stiffener thickness	ts=10 mm

Factor ks ks=0.4

Ratio ls/hs=5 exceeds 3√(355/σys)=3.
Ratio ((b+ks*hs)/t)*√(σy/355)=20.8 does not exceed 30.0.
Stiffener complies with Clause 9.3.4.1.3.

Location: Stiffeners to plate A

Shape limitations for bulb flat stiffeners (Clause 9.3.4.1.3)

The calculations are in accordance with BS 5400:Part 3:2000 "Code of Practice for Design of Steel Bridges" as implemented by Departmental Standard BD 13/06.
Stiffeners to webs and compression flanges (Clause 9.3.4).
Bulb flat stiffeners (Clause 9.3.4.1.3):

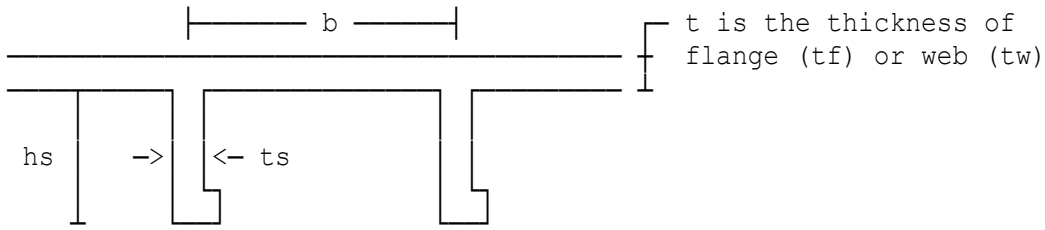

Geometric Notation Figure 1

Dimension b is the spacing of stiffeners or distance between the stiffener and beam flange/web boundary, as appropriate. In the case of non-uniform spacing the average value on the two sides may be taken.

Depth of stiffener	hs=20 mm
Span of stiffener between members	ls=100 mm
Spacing of stiffeners	b=300 mm
Plate thickness (tf or tw)	t=10 mm
Stiffener thickness	ts=10 mm

Factor ks ks=0.4

Ratio ls/hs=5 exceeds 3√(355/σys)=3.
Ratio ((b+ks*hs)/t)*√(σy/355)=30.8 exceeds 30.0.
Stiffener does not comply with Clause 9.3.4.1.3.

Copyright 1986-2024 Fitzroy Systems Ltd.

Location: Ex1 - Bulb flat stiffeners

Transverse bulb flat stiffeners to BS EN 1993-1-5

Bulb flat stiffeners are not recommended by the author especially if warping is significant. The rules of BS EN 1993-1-5 are considered conservative and bulb flat stiffeners are unlikely to comply. Adopt one of the following alternative stiffener options instead:

- flat stiffeners see proforma 364
- angle stiffeners see proforma 366
- T-Stiffeners see proforma 367

Location: Ex1 - Angle stiffeners to compression flange

Shape limitations for angle stiffeners (Clause 9.3.4.1.4)

The calculations are in accordance with BS 5400:Part 3:2000 "Code of Practice for Design of Steel Bridges" as implemented by Departmental Standard BD 13/06. The proforma checks for compliance with the shape limitations to Clause 9.3.4.1.4.

Stiffeners to webs and compression flanges. Clause 9.3.4

Angle stiffeners (Clause 9.3.4.1.4):

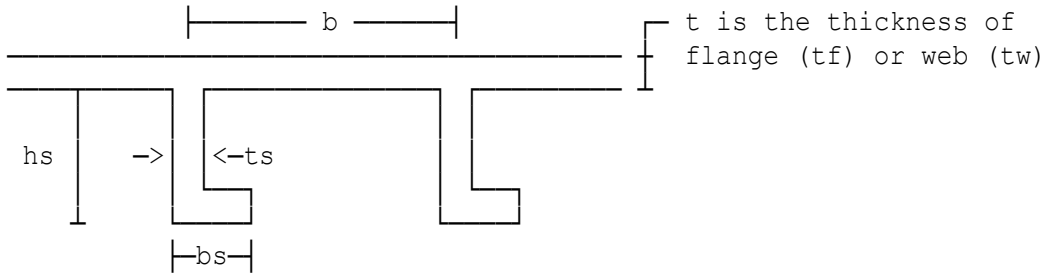

Geometric Notation Figure 1

Dimension b is the spacing of stiffeners or distance between the stiffener and beam flange/web boundary, as appropriate. In the case of non-uniform spacing the average value on the two sides may be taken.

Dimension bs=40 does not exceed hs=100
Clause 9.3.4.1.4 Condition (a) is satisfied.

Factor (bs/ts)√(σys/355)=10 does not exceed 11.0
Clause 9.3.4.1.4 Condition (b) is satisfied.

Factor (b/t)√(σy/355)=20 does not exceed 30.0
There is no limitation on the value of the factor (hs/ts)√(σys/355)
Clause 9.3.4.1.4 Condition (c) is satisfied.
Stiffener complies with Clause 9.3.4.1.4.

Location: Ex2 - Angle stiffeners to compression flange

Shape limitations for angle stiffeners (Clause 9.3.4.1.4)

The calculations are in accordance with BS 5400:Part 3:2000 "Code of Practice for Design of Steel Bridges" as implemented by Departmental Standard BD 13/06. The proforma checks for compliance with the shape limitations to Clause 9.3.4.1.4.

Stiffeners to webs and compression flanges. Clause 9.3.4

Angle stiffeners (Clause 9.3.4.1.4):

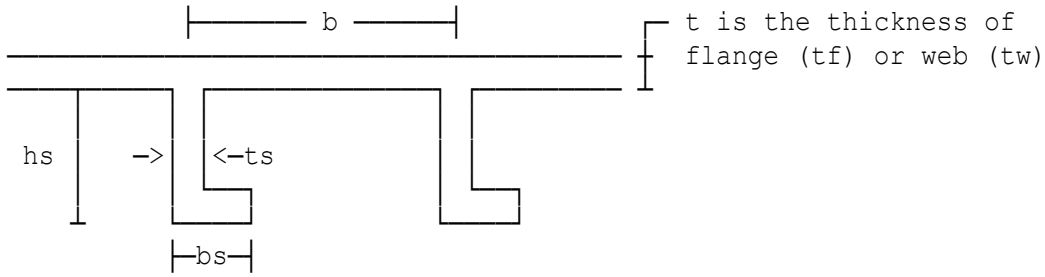

Geometric Notation Figure 1

Dimension b is the spacing of stiffeners or distance between the stiffener and beam flange/web boundary, as appropriate. In the case of non-uniform spacing the average value on the two sides may be taken.

Dimension bs=50 does not exceed hs=100
Clause 9.3.4.1.4 Condition (a) is satisfied.

Factor (bs/ts)√(σys/355)=12.5 exceeds 11.0
Clause 9.3.4.1.4 Condition (b) is not satisfied.
Stiffener does not comply with Clause 9.3.4.1.4.

Location: Ex3 - Angle stiffeners to compression flange

Shape limitations for angle stiffeners (Clause 9.3.4.1.4)

The calculations are in accordance with BS 5400:Part 3:2000 "Code of Practice for Design of Steel Bridges" as implemented by Departmental Standard BD 13/06. The proforma checks for compliance with the shape limitations to Clause 9.3.4.1.4.

Stiffeners to webs and compression flanges. Clause 9.3.4

Angle stiffeners (Clause 9.3.4.1.4):

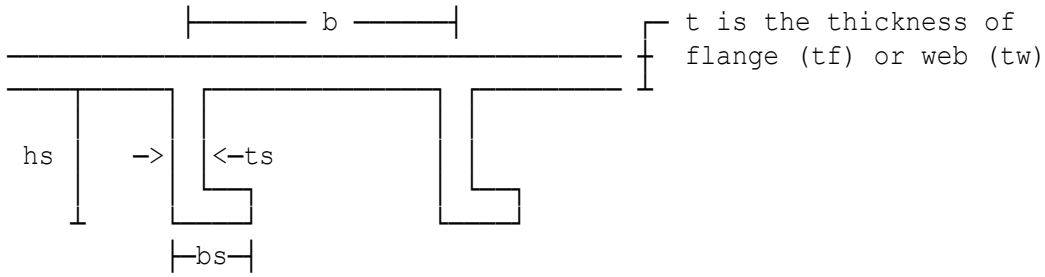

Geometric Notation Figure 1

Dimension b is the spacing of stiffeners or distance between the stiffener and beam flange/web boundary, as appropriate. In the case of non-uniform spacing the average value on the two sides may be taken.

Dimension bs=110 exceeds hs=100
Clause 9.3.4.1.4 Condition (a) is not satisfied.

Factor (bs/ts)√(σys/355)=27.5 exceeds 11.0
Clause 9.3.4.1.4 Condition (b) is not satisfied.
Stiffener does not comply with Clause 9.3.4.1.4.

Location: Ex4 - Angle stiffeners to compression flange

Shape limitations for angle stiffeners (Clause 9.3.4.1.4)

The calculations are in accordance with BS 5400:Part 3:2000 "Code of Practice for Design of Steel Bridges" as implemented by Departmental Standard BD 13/06. The proforma checks for compliance with the shape limitations to Clause 9.3.4.1.4.

Stiffeners to webs and compression flanges. Clause 9.3.4

Angle stiffeners (Clause 9.3.4.1.4):

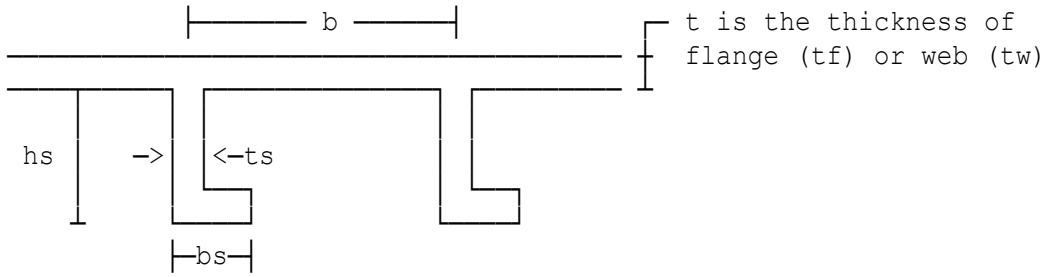

Geometric Notation Figure 1

Dimension b is the spacing of stiffeners or distance between the stiffener and beam flange/web boundary, as appropriate. In the case of non-uniform spacing the average value on the two sides may be taken.

Dimension bs=40 does not exceed hs=100
Clause 9.3.4.1.4 Condition (a) is satisfied.

Factor (bs/ts)√(σys/355)=10 does not exceed 11.0
Clause 9.3.4.1.4 Condition (b) is satisfied.

From Appendix G.3.
With (ls/bs)√(σys/355)=12 the upper limit
to factor (hs/ts)√(σys/355) is 22
Slenderness ratio (hs/ts)√(σys/355)=25 exceeds the upper limit 22
Clause 9.3.4.1.4 Condition (c)(2) is not satisfied.
Stiffener does not comply with Clause 9.3.4.1.4.

Location: Ex1 - Angle stiffeners to compression flange

Shape limitations for angle stiffeners

The calculations are in accordance with BS EN 1993-1-5:2006 "Eurocode 3: Design of steel structures" Part 1-5: Plated structural elements and NA to BS EN 1993-1-5:2006.

Stiffeners to webs and compression flanges (Clause 9.2.1).

Angle stiffeners:

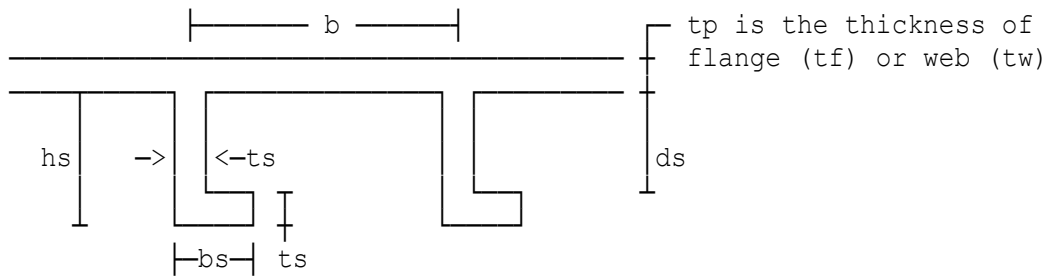

Geometric Notation Figure 1

Dimension b is the spacing of stiffeners or distance between the stiffener and beam flange/web boundary, as appropriate. In the case of non-uniform spacing the average value on the two sides may be taken.

Plate yield strength fyp=355 N/mm²
Stiffener yield strength fys=355 N/mm²

Stiffness check - Clause 9.3.3(3)

Stiffener length/depth hw=450 mm
Second moment of area provided Ipro=6.2152E6 mm⁴
Second moment of area required Ist=1.5*hw^3*tp^3/a^2=1.4762E6 mm⁴
As Ist ≤ Ipro (1.4762E6 mm⁴ ≤ 6.2152E6 mm⁴), the stiffener is OK.

Location: Ex2 - Angle stiffeners to compression flange

Shape limitations for angle stiffeners

The calculations are in accordance with BS EN 1993-1-5:2006 "Eurocode 3: Design of steel structures" Part 1-5: Plated structural elements and NA to BS EN 1993-1-5:2006.

Stiffeners to webs and compression flanges (Clause 9.2.1).

Angle stiffeners:

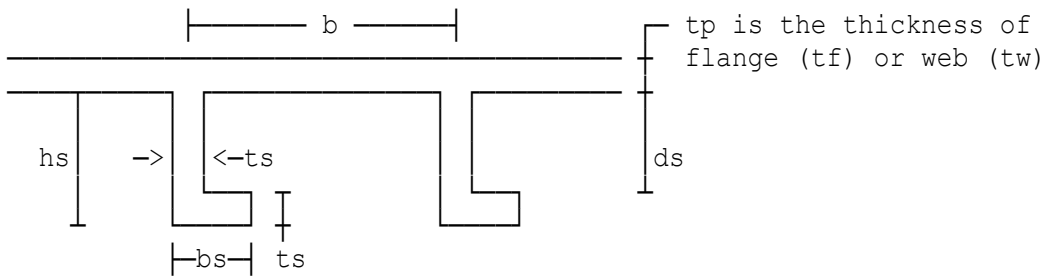

Geometric Notation Figure 1

Dimension b is the spacing of stiffeners or distance between the stiffener and beam flange/web boundary, as appropriate. In the case of non-uniform spacing the average value on the two sides may be taken.

Plate yield strength fyp=355 N/mm²
Stiffener yield strength fys=355 N/mm²

Stiffness check - Clause 9.3.3(3)

Stiffener length/depth hw=450 mm
Second moment of area provided Ipro=6.9785E6 mm⁴
Second moment of area required Ist=1.5*hw^3*tp^3/a^2=1.4762E6 mm⁴
As Ist ≤ Ipro (1.4762E6 mm⁴ ≤ 6.9785E6 mm⁴), the stiffener is OK.

Location: Ex3 - Angle stiffeners to compression flange

Shape limitations for angle stiffeners

The calculations are in accordance with BS EN 1993-1-5:2006 "Eurocode 3: Design of steel structures" Part 1-5: Plated structural elements and NA to BS EN 1993-1-5:2006.

Stiffeners to webs and compression flanges (Clause 9.2.1).

Angle stiffeners:

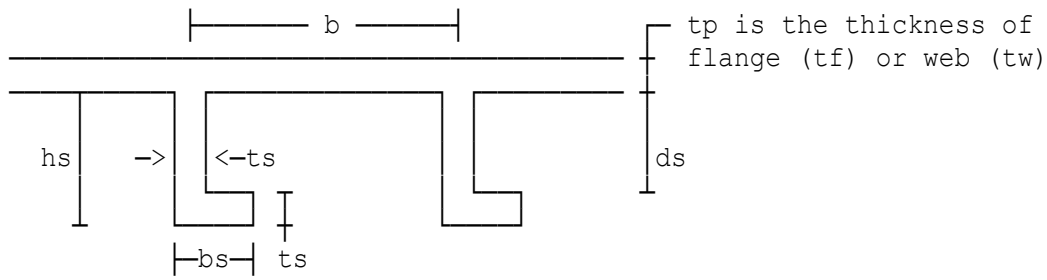

Geometric Notation Figure 1

Dimension b is the spacing of stiffeners or distance between the stiffener and beam flange/web boundary, as appropriate. In the case of non-uniform spacing the average value on the two sides may be taken.

Plate yield strength fyp=355 N/mm²
Stiffener yield strength fys=355 N/mm²

Stiffness check - Clause 9.3.3(3)

Stiffener length/depth hw=450 mm
Second moment of area provided Ipro=13.523E6 mm⁴
Second moment of area required Ist=1.5*hw^3*tp^3/a^2=5.1258E6 mm⁴
As Ist ≤ Ipro (5.1258E6 mm⁴ ≤ 13.523E6 mm⁴), the stiffener is OK.

Location: Ex4 - Angle stiffeners to compression flange

Shape limitations for angle stiffeners

The calculations are in accordance with BS EN 1993-1-5:2006 "Eurocode 3: Design of steel structures" Part 1-5: Plated structural elements and NA to BS EN 1993-1-5:2006.

Stiffeners to webs and compression flanges (Clause 9.2.1).

Angle stiffeners:

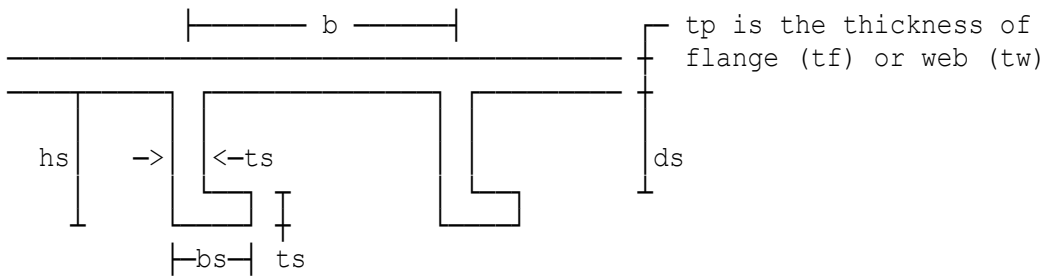

Geometric Notation Figure 1

Dimension b is the spacing of stiffeners or distance between the stiffener and beam flange/web boundary, as appropriate. In the case of non-uniform spacing the average value on the two sides may be taken.

Plate yield strength fyp=355 N/mm²
Stiffener yield strength fys=355 N/mm²

Stiffness check - Clause 9.3.3(3)

Stiffener length/depth hw=400 mm
Second moment of area provided Ipro=6.965E6 mm⁴
Second moment of area required Ist=1.5*hw^3*tp^3/a^2=2.6449E6 mm⁴
As Ist ≤ Ipro (2.6449E6 mm⁴ ≤ 6.965E6 mm⁴), the stiffener is OK.

Location: Ex5 - Designer's Guide to EC3 by C.R.Hendy Ex. 6.9-1(i)

Shape limitations for angle stiffeners

The calculations are in accordance with BS EN 1993-1-5:2006 "Eurocode 3: Design of steel structures" Part 1-5: Plated structural elements and NA to BS EN 1993-1-5:2006.

Stiffeners to webs and compression flanges (Clause 9.2.1).

Angle stiffeners:

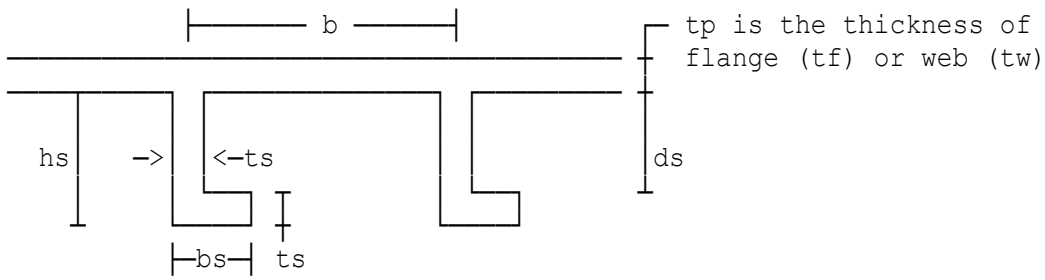

Geometric Notation Figure 1

Dimension b is the spacing of stiffeners or distance between the stiffener and beam flange/web boundary, as appropriate. In the case of non-uniform spacing the average value on the two sides may be taken.

Plate yield strength fyp=355 N/mm²
Stiffener yield strength fys=355 N/mm²

Stiffness check - Clause 9.3.3(3)

Stiffener length/depth hw=600 mm
Second moment of area provided Ipro=14.204E6 mm⁴
Second moment of area required Ist=1.5*hw^3*tp^3/a^2=3.6E6 mm⁴
As Ist ≤ Ipro (3.6E6 mm⁴ ≤ 14.204E6 mm⁴), the stiffener is OK.

Location: Ex6 - Designer's Guide to EC3 by C.R.Hendy Ex. 6.9-1(ii)

Shape limitations for angle stiffeners

The calculations are in accordance with BS EN 1993-1-5:2006 "Eurocode 3: Design of steel structures" Part 1-5: Plated structural elements and NA to BS EN 1993-1-5:2006.

Stiffeners to webs and compression flanges (Clause 9.2.1).

Angle stiffeners:

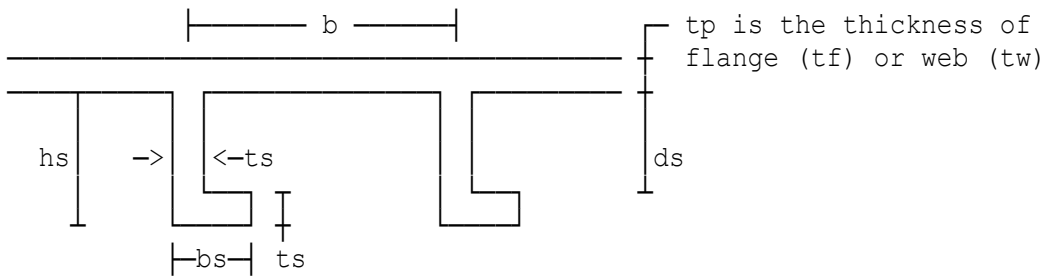

Geometric Notation Figure 1

Dimension b is the spacing of stiffeners or distance between the stiffener and beam flange/web boundary, as appropriate. In the case of non-uniform spacing the average value on the two sides may be taken.

Plate yield strength	fyp=355 N/mm²
Stiffener yield strength	fys=355 N/mm²
	L=1400 mm

Stiffness check - Clause 9.3.3(3)

Stiffener length/depth	hw=600 mm
Second moment of area provided	Ipro=9.9923E6 mm⁴
Second moment of area required	Ist=1.5*hw^3*tp^3/a^2=3.6E6 mm⁴

As Ist ≤ Ipro (3.6E6 mm⁴ ≤ 9.9923E6 mm⁴), the stiffener is OK.

Location: Ex1 - Web stiffener

Shape limitations for tee stiffeners (Clause 9.3.4.1.5)

The calculations are in accordance with BS 5400:Part 3:2000 "Code of Practice for Design of Steel Bridges" as implemented by Departmental Standard BD 13/06. The proforma checks for compliance with the shape limitations to Clause 9.3.4.1.5.

Stiffeners to webs and compression flanges. Clause 9.3.4

Tee stiffeners. Clause 9.3.4.1.5

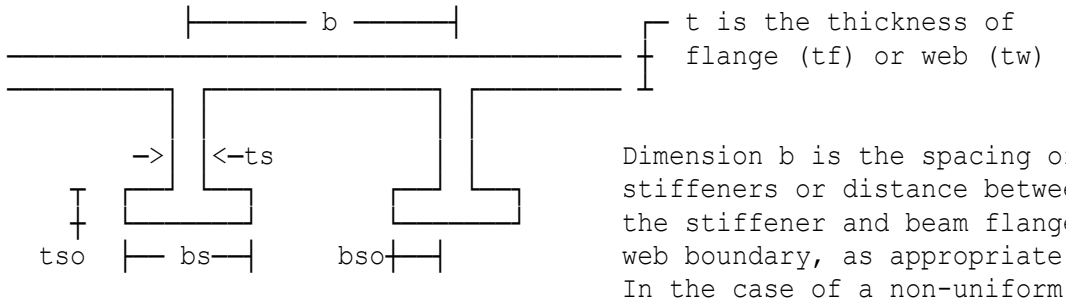

Geometric Notation Figure 1

Dimension b is the spacing of stiffeners or distance between the stiffener and beam flange/ web boundary, as appropriate. In the case of a non-uniform spacing the average value on the two sides may be taken.

Effective stiffener depth is measured from the underside of the flange plate to the midplane of the equivalent uniform thickness of the flange of the tee stiffener.
Factor (bso/tso)√(σys/355)=8 does not exceed 10
Condition (a) is satisfied.
Factor (ds/ts)√((σys+σa)/355)=7.0711 does not exceed 41
Condition (b) is satisfied.
Factor (ds/ts)√(σys/355)=5 does not exceed 7
Condition (c) is satisfied.
Stiffener complies with the requirements of Clause 9.3.4.1.5.

Location: Web stiffener

Shape limitations for tee stiffeners (Clause 9.3.4.1.5)

The calculations are in accordance with BS 5400:Part 3:2000 "Code of Practice for Design of Steel Bridges" as implemented by Departmental Standard BD 13/06. The proforma checks for compliance with the shape limitations to Clause 9.3.4.1.5.

Stiffeners to webs and compression flanges. Clause 9.3.4

Tee stiffeners. Clause 9.3.4.1.5

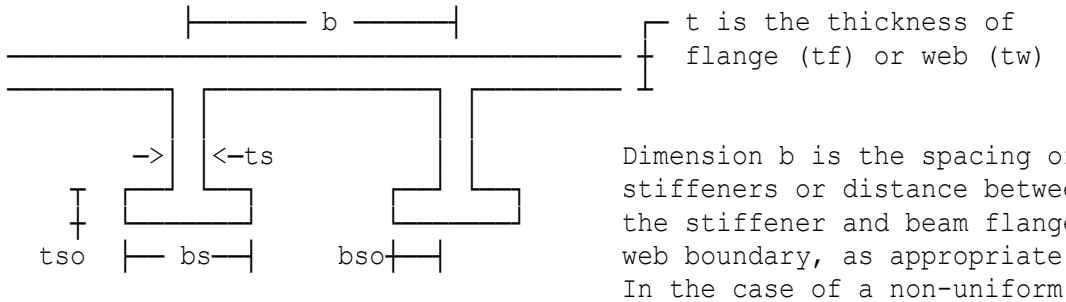

Geometric Notation Figure 1

Dimension b is the spacing of stiffeners or distance between the stiffener and beam flange/ web boundary, as appropriate. In the case of a non-uniform spacing the average value on the two sides may be taken.

Effective stiffener depth is measured from the underside of the flange plate to the midplane of the equivalent uniform thickness of the flange of the tee stiffener.
Factor (bso/tso)√(σys/355)=12 exceeds 10
Condition (a) is not satisfied.
Factor (ds/ts)√((σys+σa)/355)=7.0711 does not exceed 41
Condition (b) is satisfied.
Factor (ds/ts)√(σys/355)=5 does not exceed 7
Condition (c) is satisfied.
Stiffener does not comply with the requirements of Clause 9.3.4.1.5.

Location: Web stiffener

Shape limitations for tee stiffeners (Clause 9.3.4.1.5)

The calculations are in accordance with BS 5400:Part 3:2000 "Code of Practice for Design of Steel Bridges" as implemented by Departmental Standard BD 13/06. The proforma checks for compliance with the shape limitations to Clause 9.3.4.1.5.

Stiffeners to webs and compression flanges. Clause 9.3.4

Tee stiffeners. Clause 9.3.4.1.5

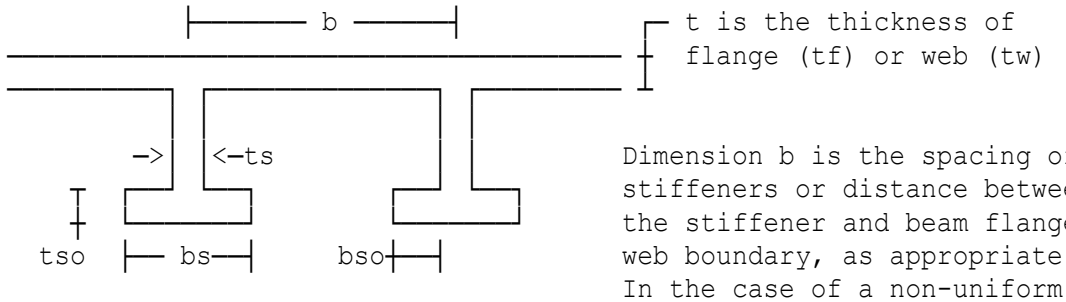

Geometric Notation Figure 1

Dimension b is the spacing of stiffeners or distance between the stiffener and beam flange/ web boundary, as appropriate. In the case of a non-uniform spacing the average value on the two sides may be taken.

Effective stiffener depth is measured from the underside of the flange plate to the midplane of the equivalent uniform thickness of the flange of the tee stiffener.
Factor (bso/tso)√(σys/355)=8 does not exceed 10
Condition (a) is satisfied
Factor (ds/ts)√((σys+σa)/355)=38.184 does not exceed 41
Condition (b) is satisfied.
Condition (c) (1) is not satisfied.
Factor (b/t)√(σy/355)=25 does not exceed 32
Factor (ds/bs)=3 does not exceed 4
Limiting value of factor (ds/ts)√(σys/355) from Figure 4b is 29.384
Factor (ds/ts)√(σys/355)=27 does not exceed 29.384
Condition (c) (2) is satisfied.
Stiffener complies with the requirements of Clause 9.3.4.1.5.

Location: Web stiffener

Shape limitations for tee stiffeners (Clause 9.3.4.1.5)

The calculations are in accordance with BS 5400:Part 3:2000 "Code of Practice for Design of Steel Bridges" as implemented by Departmental Standard BD 13/06. The proforma checks for compliance with the shape limitations to Clause 9.3.4.1.5.

Stiffeners to webs and compression flanges. Clause 9.3.4

Tee stiffeners. Clause 9.3.4.1.5

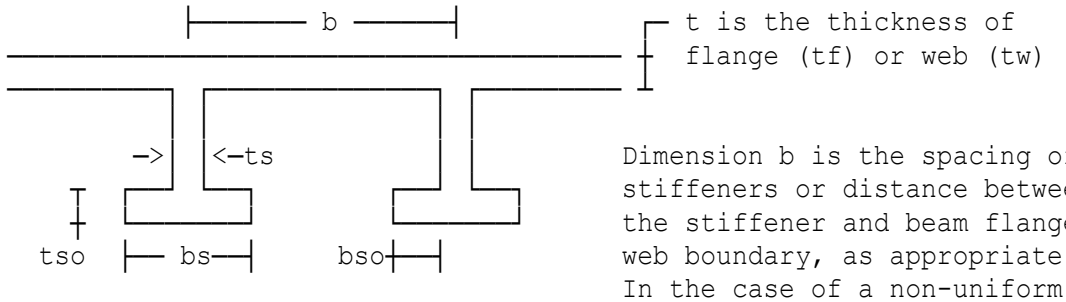

Geometric Notation Figure 1

Dimension b is the spacing of stiffeners or distance between the stiffener and beam flange/ web boundary, as appropriate. In the case of a non-uniform spacing the average value on the two sides may be taken.

Effective stiffener depth is measured from the underside of the flange plate to the midplane of the equivalent uniform thickness of the flange of the tee stiffener.
Factor (bso/tso)√(σys/355)=8 does not exceed 10
Condition (a) is satisfied
Factor (ds/ts)√((σys+σa)/355)=10.607 does not exceed 41
Condition (b) is satisfied.
Factor (ls/bs)√(σys/355)=21.778 is greater than 12 and less than 25
Limiting value of factor (ds/ts)√(σys/355) from Figure 4a is 7.5472
Factor (ds/ts)√(σys/355)=7.5 does not exceed 7.5472
Condition (c) (1) is satisfied.
Factor (b/t)√(σy/355)=25 does not exceed 32
Factor (ds/bs)=0.83333 does not exceed 4
Limiting value of factor (ds/ts)√(σys/355) from Figure 4b is 29.384
Factor (ds/ts)√(σys/355)=7.5 does not exceed 29.384
Condition (c) (2) is satisfied.
Stiffener complies with the requirements of Clause 9.3.4.1.5.

Location: Web stiffener

Shape limitations for tee stiffeners (Clause 9.3.4.1.5)

The calculations are in accordance with BS 5400:Part 3:2000 "Code of Practice for Design of Steel Bridges" as implemented by Departmental Standard BD 13/06. The proforma checks for compliance with the shape limitations to Clause 9.3.4.1.5.

Stiffeners to webs and compression flanges. Clause 9.3.4

Tee stiffeners. Clause 9.3.4.1.5

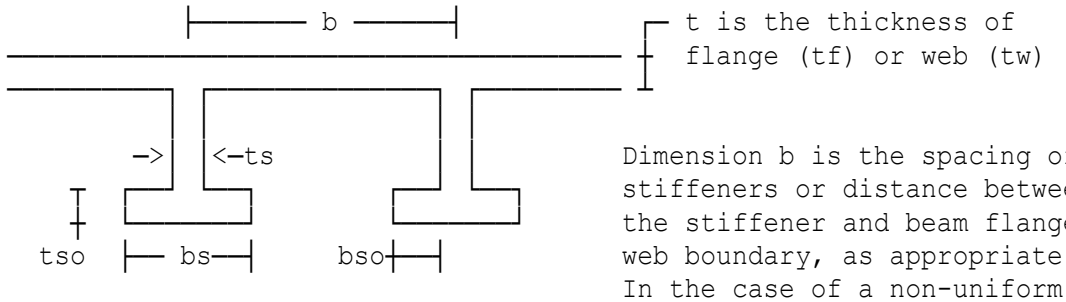

Geometric Notation Figure 1

Dimension b is the spacing of stiffeners or distance between the stiffener and beam flange/ web boundary, as appropriate. In the case of a non-uniform spacing the average value on the two sides may be taken.

Effective stiffener depth is measured from the underside of the flange plate to the midplane of the equivalent uniform thickness of the flange of the tee stiffener.
Factor (bso/tso)√(σys/355)=8 does not exceed 10
Condition (a) is satisfied
Factor (ds/ts)√((σys+σa)/355)=10.889 does not exceed 41
Condition (b) is satisfied.
Condition (c) (1) is not satisfied.
Factor (b/t)√(σy/355)=25 does not exceed 32
Factor (ds/bs)=0.85556 does not exceed 4
Limiting value of factor (ds/ts)√(σys/355) from Figure 4b is 29.384
Factor (ds/ts)√(σys/355)=7.7 does not exceed 29.384
Condition (c) (2) is satisfied.
Stiffener complies with the requirements of Clause 9.3.4.1.5.

Location: Ex1 - Web stiffener

Shape Limitations for T-Stiffeners

The calculations are in accordance with BS EN 1993-1-5:2006 "Eurocode 3: Design of steel structures" Part 1-5: Plated structural elements and NA to BS EN 1993-1-5:2006.

Stiffeners to webs and compression flanges (Clause 9.2.1).

Tee stiffeners:

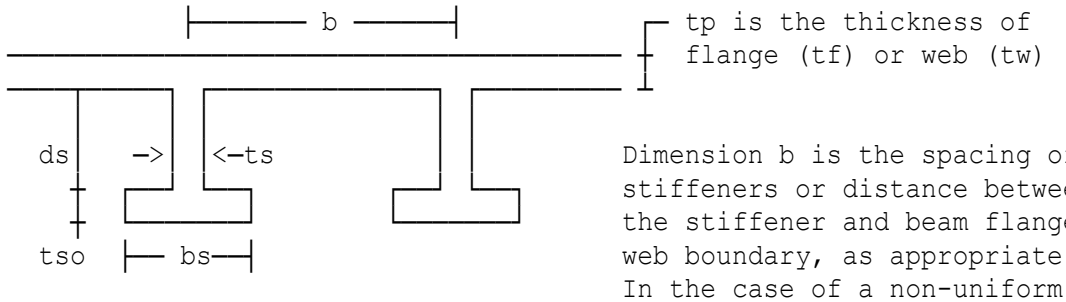

Geometric Notation Figure 1

Dimension b is the spacing of stiffeners or distance between the stiffener and beam flange/ web boundary, as appropriate. In the case of a non-uniform spacing the average value on the two sides may be taken.

Effective stiffener depth is measured from the underside of the flange plate to the midplane of the equivalent uniform thickness of the flange of the tee stiffener.

Plate yield strength fyp=345 N/mm²
Stiffener yield strength fys=355 N/mm²

Stiffness check - Clause 9.3.3(3)

Stiffener length/depth hw=300 mm
Second moment of area provided Ipro=2.6239E6 mm⁴
Second moment of area required Ist=0.75*hw*tp^3=1.8E6 mm⁴
As Ist ≤ Ipro (1.8E6 mm⁴ ≤ 2.6239E6 mm⁴), the stiffener is OK.

Location: Ex2 - Web stiffener

Shape Limitations for T-Stiffeners

The calculations are in accordance with BS EN 1993-1-5:2006 "Eurocode 3: Design of steel structures" Part 1-5: Plated structural elements and NA to BS EN 1993-1-5:2006.

Stiffeners to webs and compression flanges (Clause 9.2.1).

Tee stiffeners:

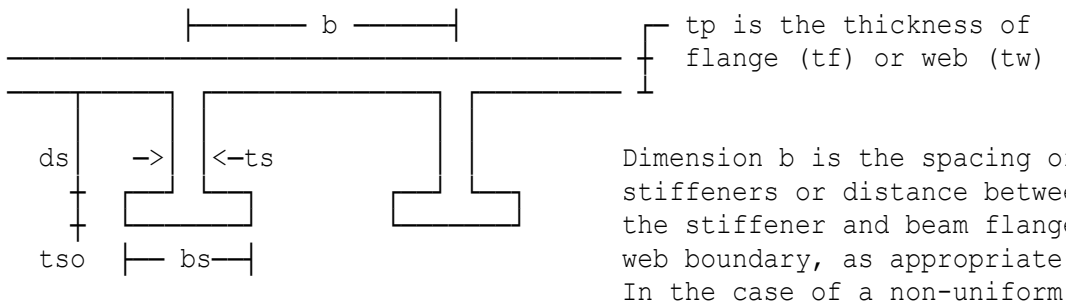

Geometric Notation Figure 1

Dimension b is the spacing of stiffeners or distance between the stiffener and beam flange/ web boundary, as appropriate. In the case of a non-uniform spacing the average value on the two sides may be taken.

Effective stiffener depth is measured from the underside of the flange plate to the midplane of the equivalent uniform thickness of the flange of the tee stiffener.

Plate yield strength	fyp=345 N/mm²
Stiffener yield strength	fys=355 N/mm²
	L=3000 mm

Location: Ex3 - Web stiffener

Shape Limitations for T-Stiffeners

The calculations are in accordance with BS EN 1993-1-5:2006 "Eurocode 3: Design of steel structures" Part 1-5: Plated structural elements and NA to BS EN 1993-1-5:2006.

Stiffeners to webs and compression flanges (Clause 9.2.1).

Tee stiffeners:

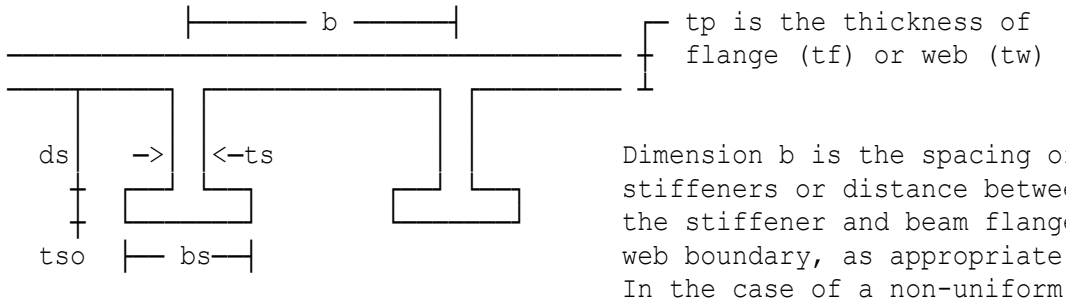

Geometric Notation Figure 1

Dimension b is the spacing of stiffeners or distance between the stiffener and beam flange/ web boundary, as appropriate. In the case of a non-uniform spacing the average value on the two sides may be taken.

Effective stiffener depth is measured from the underside of the flange plate to the midplane of the equivalent uniform thickness of the flange of the tee stiffener.

Plate yield strength fyp=345 N/mm²
Stiffener yield strength fys=345 N/mm²

Location: Ex4 - Web stiffener

Shape Limitations for T-Stiffeners

The calculations are in accordance with BS EN 1993-1-5:2006 "Eurocode 3: Design of steel structures" Part 1-5: Plated structural elements and NA to BS EN 1993-1-5:2006.

Stiffeners to webs and compression flanges (Clause 9.2.1).

Tee stiffeners:

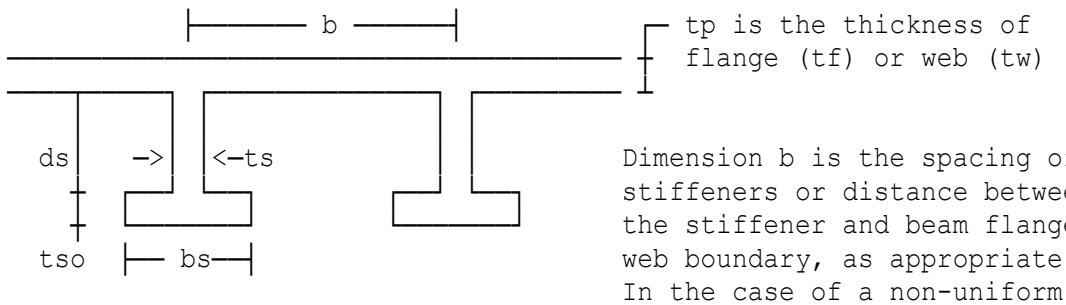

Geometric Notation Figure 1

Dimension b is the spacing of stiffeners or distance between the stiffener and beam flange/ web boundary, as appropriate. In the case of a non-uniform spacing the average value on the two sides may be taken.

Effective stiffener depth is measured from the underside of the flange plate to the midplane of the equivalent uniform thickness of the flange of the tee stiffener.

Plate yield strength fyp=345 N/mm²
Stiffener yield strength fys=355 N/mm²

Stiffness check - Clause 9.3.3(3)

Stiffener length/depth hw=600 mm
Second moment of area provided Ipro=11.84E6 mm⁴
Second moment of area required Ist=1.5*hw^3*tp^3/a^2=10.368E6 mm⁴
As Ist ≤ Ipro (10.368E6 mm⁴ ≤ 11.84E6 mm⁴), the stiffener is OK.

Location: Ex5 - Web stiffener

Shape Limitations for T-Stiffeners

The calculations are in accordance with BS EN 1993-1-5:2006 "Eurocode 3: Design of steel structures" Part 1-5: Plated structural elements and NA to BS EN 1993-1-5:2006.

Stiffeners to webs and compression flanges (Clause 9.2.1).

Tee stiffeners:

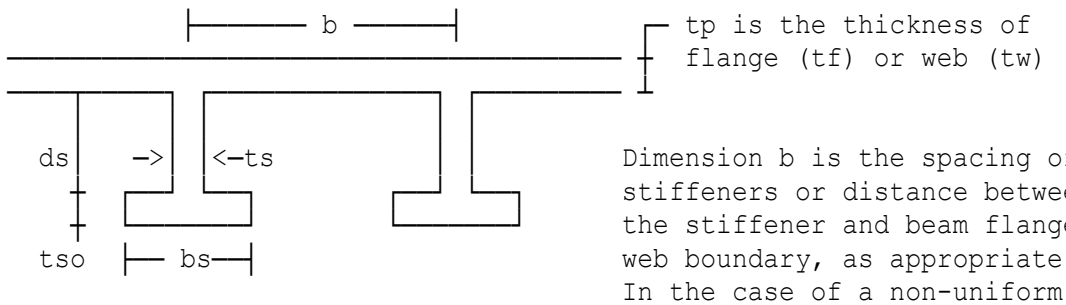

Geometric Notation Figure 1

Dimension b is the spacing of stiffeners or distance between the stiffener and beam flange/ web boundary, as appropriate. In the case of a non-uniform spacing the average value on the two sides may be taken.

Effective stiffener depth is measured from the underside of the flange plate to the midplane of the equivalent uniform thickness of the flange of the tee stiffener.

Plate yield strength	fyp=345 N/mm²
Stiffener yield strength	fys=355 N/mm²
	L=1500 mm

Stiffness check - Clause 9.3.3(3)

Stiffener length/depth	hw=450 mm
Second moment of area provided	Ipro=5.5936E6 mm⁴
Second moment of area required	Ist=1.5*hw^3*tp^3/a^2=4.374E6 mm⁴

As Ist ≤ Ipro (4.374E6 mm⁴ ≤ 5.5936E6 mm⁴), the stiffener is OK.

Location: Ex1 - Stiffened compression flange

Shape limitations for closed stiffeners (Clause 9.3.4.1.5)

The calculations are in accordance with BS 5400:Part 3:2000 "Code of Practice for Design of Steel Bridges" as implemented by Departmental Standard BD 13/06.

Stiffeners to webs and compression flanges (Clause 9.3.4).

Closed stiffeners (Clause 9.3.4.2):

```
                    b1          b2          b1
            ├──────────┼──────────┼──────────┤
      ──────────────────────────────────────────────────────────
      ───/──────────────────────────────────────────────────────
           \    \ \         / /           \ \         / /
            \    \ \       / / <── Plate   \ \       / /
          ds2\    \ \     / /  thickness ts \ \     / /   ds1 and ds2
             _\__  \ ·──· /                  \ ·──· /    measured on
                    ·────·                    ·────·     centreline
                     ds1                       ds1
                    ├──┤                      ├──┤
```

Geometric Notation Figure 1

Width of wall	ds1=75 mm
Width of wall	ds2=75 mm
Thickness of stiffener	ts=3 mm

Stiffener:
Nominal yield stress of stiffener sys=355 N/mm²
Stress σa at centroid of section sa=sys=355 N/mm²
Factor (ds1/ts)√(σys/355)=25 does not exceed 29.0
Clause 9.3.4.2 Condition (a) is satisfied.
Factor (ds2/ts)√((σys+σa)/355)=35.355 does not exceed 41.0
Clause 9.3.4.2 Condition (b) is satisfied.
Stiffener complies with Clause 9.3.4.2.

Location: Stiffened compression flange

Shape limitations for closed stiffeners (Clause 9.3.4.1.5)

The calculations are in accordance with BS 5400:Part 3:2000 "Code of Practice for Design of Steel Bridges" as implemented by Departmental Standard BD 13/06.

Stiffeners to webs and compression flanges (Clause 9.3.4).

Closed stiffeners (Clause 9.3.4.2):

```
                    b1          b2          b1
             ├──────────┼──────────┼──────────┤
     ═══════════════════════════════════════════════════
     ═══/═══════════════════════════════════════════════
          \    \ \         / /           \ \         / /
           \    \ \       / / <── Plate   \ \       / /
         ds2\    \ \     / /  thickness ts \ \     / /   ds1 and ds2
            _\__  \ ·──· /                  \ ·──· /    measured on
                   ·────·                    ·────·     centreline
                    ds1                       ds1
                   ├──┤                      ├──┤
```

Geometric Notation Figure 1

Width of wall	ds1=100 mm
Width of wall	ds2=75 mm
Thickness of stiffener	ts=3 mm

Stiffener:
Nominal yield stress of stiffener sys=355 N/mm²
Stress σa at centroid of section sa=sys=355 N/mm²
Factor (ds1/ts)√(σys/355)=33.333 is greater than 29.0
Stiffener does not comply with Clause 9.3.4.2 Condition (a).
Factor (ds2/ts)√((σys+σa)/355)=35.355 does not exceed 41.0
Clause 9.3.4.2 Condition (b) is satisfied.
Stiffener does not comply with Clause 9.3.4.2.

Location: Stiffened compression flange

Shape limitations for closed stiffeners (Clause 9.3.4.1.5)

The calculations are in accordance with BS 5400:Part 3:2000 "Code of Practice for Design of Steel Bridges" as implemented by Departmental Standard BD 13/06.

Stiffeners to webs and compression flanges (Clause 9.3.4).

Closed stiffeners (Clause 9.3.4.2):

```
                    b1          b2          b1
             ├──────────┼──────────┼──────────┤
     ═══════════════════════════════════════════════════
     ═══/═══════════════════════════════════════════════
          \    \ \         / /           \ \         / /
           \    \ \       / / <── Plate   \ \       / /
         ds2\    \ \     / /  thickness ts \ \     / /   ds1 and ds2
            _\__  \ ·──· /                  \ ·──· /    measured on
                   ·────·                    ·────·     centreline
                    ds1                       ds1
                   ├──┤                      ├──┤
```

Geometric Notation Figure 1

Width of wall	ds1=75 mm
Width of wall	ds2=95 mm
Thickness of stiffener	ts=3 mm

Stiffener:
Nominal yield stress of stiffener sys=355 N/mm²
Stress σa at centroid of section sa=sys=355 N/mm²
Factor (ds1/ts)√(σys/355)=25 does not exceed 29.0
Clause 9.3.4.2 Condition (a) is satisfied.
Factor (ds2/ts)√((σys+σa)/355)=44.783 is greater than 41.0
Stiffener does not comply with Clause 9.3.4.2 Condition (b).
Stiffener does not comply with Clause 9.3.4.2.

Location: Ex1 - Stiffened compression flange

Shape limitations for closed stiffeners

The calculations are in accordance with BS EN 1993-1-5:2006 "Eurocode 3: Design of steel structures" Part 1-5: Plated structural elements and NA to BS EN 1993-1-5:2006.

Stiffeners to webs and compression flanges (Clause 9.3.3).

Closed stiffeners:

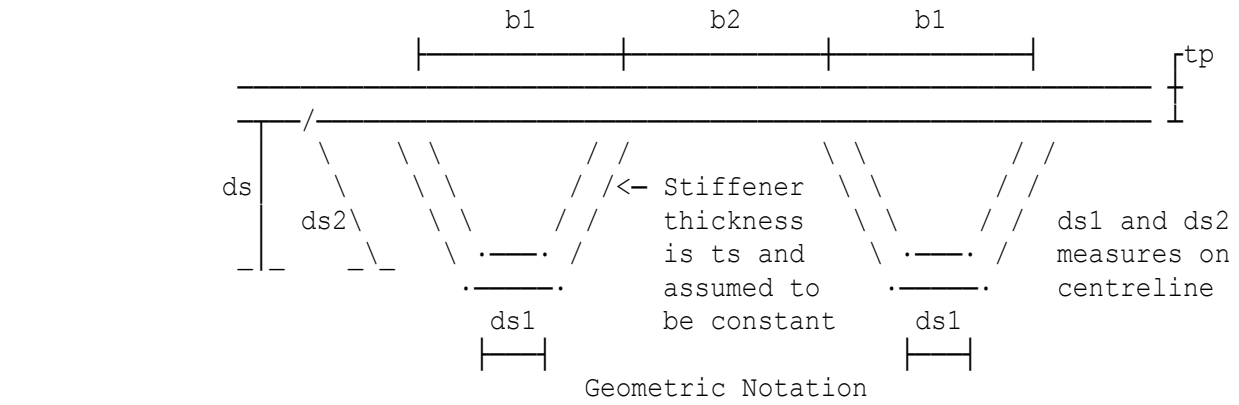

Width of wall	ds1=100 mm
Width of wall	ds2=100 mm
Distance	b1=200 mm
Distance	b2=200 mm
Distance	ds=80 mm
Plate thickness	tp=15 mm
Thickness of stiffener	ts=10 mm
Plate yield strength	fyp=355 N/mm²
Stiffener yield strength	fys=355 N/mm²

Stiffness check - Clause 9.3.3(3)

Stiffener length/depth	hw=600 mm
compute	comp1=A1*y1^2+2*A2*y2^2+A3*y3^2 =8.4681E6
compute	comp2=fw*tp^3/12+2*ts*ds^3/12+ds1 *ts^3/12=974167
Second moment of area provided	Ipro=comp1+comp2=9.4422E6 mm⁴
Second moment of area required	Ist=1.5*hw^3*tp^3/a^2=6.8344E6 mm⁴

As Ist ≤ Ipro (6.8344E6 mm⁴ ≤ 9.4422E6 mm⁴), the stiffener is OK.

Location: Ex2 - Stiffened compression flange

Shape limitations for closed stiffeners

The calculations are in accordance with BS EN 1993-1-5:2006 "Eurocode 3: Design of steel structures" Part 1-5: Plated structural elements and NA to BS EN 1993-1-5:2006.

Stiffeners to webs and compression flanges (Clause 9.3.3).

Closed stiffeners:

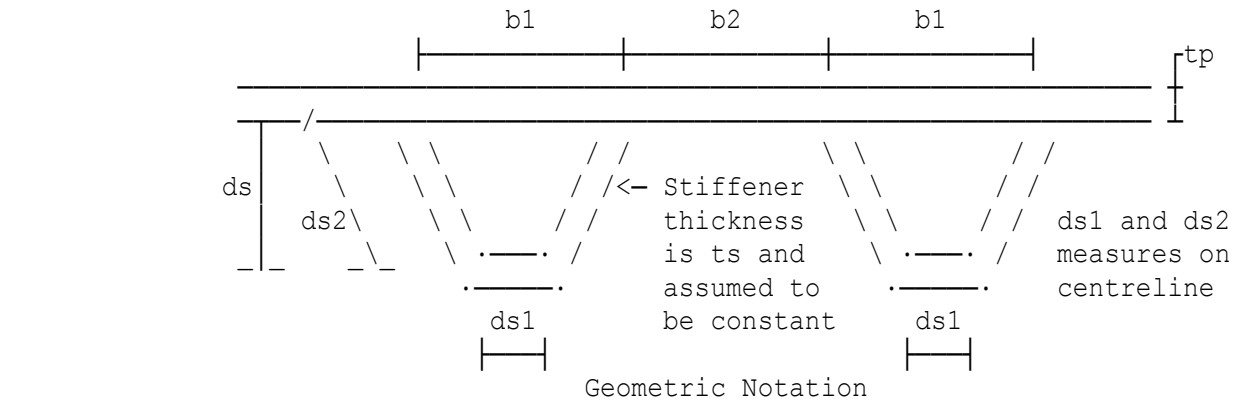

Width of wall	ds1=100 mm
Width of wall	ds2=120 mm
Distance	b1=280 mm
Distance	b2=280 mm
Distance	ds=80 mm
Plate thickness	tp=15 mm
Thickness of stiffener	ts=15 mm
Plate yield strength	fyp=275 N/mm²
Stiffener yield strength	fys=275 N/mm²

Stiffness check - Clause 9.3.3(3)

Stiffener length/depth	hw=900 mm
compute	comp1=A1*y1^2+2*A2*y2^2+A3*y3^2 =12.84E6
compute	comp2=fw*tp^3/12+2*ts*ds^3/12+ds1 *ts^3/12=1.4656E6
Second moment of area provided	Ipro=comp1+comp2=14.305E6 mm⁴
Second moment of area required	Ist=1.5*hw^3*tp^3/a^2=11.768E6 mm⁴

As Ist ≤ Ipro (11.768E6 mm⁴ ≤ 14.305E6 mm⁴), the stiffener is OK.

Location: Ex1 - Beam F

Shape limitations for flanges curved in elevation (Clause 9.3.5)

The calculations are in accordance with BS 5400:Part 3:2000 "Code of Practice for Design of Steel Bridges" as implemented by Departmental Standard BD 13/06.

Flanges curved in elevation (Clause 9.3.5).
Flange outstand:
Section comprises flange plates connected to the web by riveted/bolted connections.

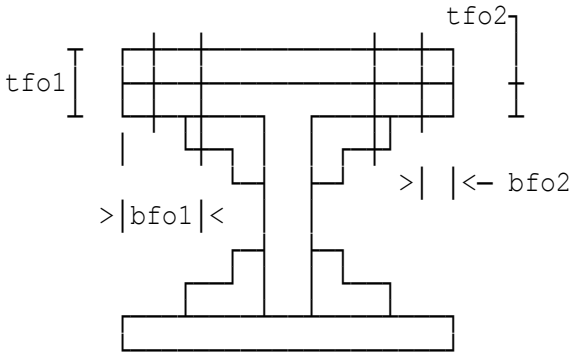

Case 1: bfo=bfo1, tfo=tfo1
Case 2: bfo=bfo2, tfo=tfo2

Thickness tfo is the mean thickness of the outstand.

Dimension bfo is the width of outstand measured from the edge to the nearest line of rivets or bolts connecting it to the supporting part of the member.

Dimension of outstand bfo=200 mm
Thickness of plate tfo=10 mm

Radius of curvature of the flange Rf=25000 mm

Factor bfo^2/tfo=4000 does not exceed factor Rf/6=4166.7
Flange complies with Clause 9.3.5 Condition (a).

Location: Ex2 - Beam F

Shape limitations for flanges curved in elevation (Clause 9.3.5)

The calculations are in accordance with BS 5400:Part 3:2000 "Code of Practice for Design of Steel Bridges" as implemented by Departmental Standard BD 13/06.

Flanges curved in elevation (Clause 9.3.5).
Flange outstand:
Section comprises flange plates welded to web.
Flange is a single plate.

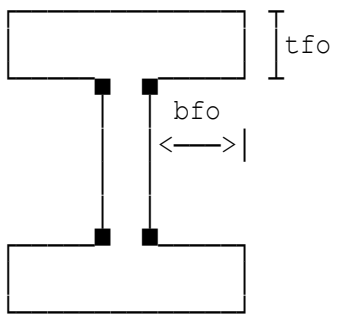

Thickness tfo is the mean thickness of the outstand

Dimension bfo is the width of the outstand measured from the edge to the surface of the web.

Dimension of outstand	bfo=200 mm
Thickness of plate	tfo=8 mm

Radius of curvature of the flange Rf=25000 mm

Factor bfo^2/tfo=5000 is greater than factor Rf/6=4166.7
Flange does not comply with Clause 9.3.5 Condition (a).

Location: Ex3 - Beam F

Shape limitations for flanges curved in elevation (Clause 9.3.5)

The calculations are in accordance with BS 5400:Part 3:2000 "Code of Practice for Design of Steel Bridges" as implemented by Departmental Standard BD 13/06.

Flanges curved in elevation (Clause 9.3.5).

Section is the flange of an internal panel.

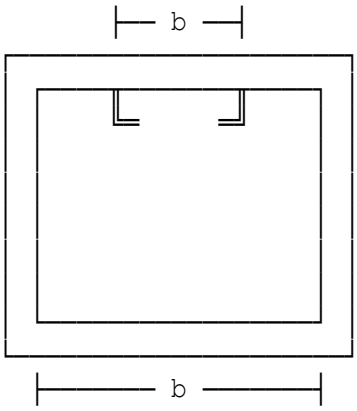

tf = thickness of the panel between longitudinal stiffeners
b = distance between longitudinal stiffeners

or

tf = thickness of the panel between webs
b = distance between webs

Dimension of plate b=200 mm
Thickness of plate tf=10 mm

Radius of curvature of the flange Rf=25000 mm

Factor b^2/tf=4000 does not exceed factor Rf/2=12500
Flange complies with Clause 9.3.5 Condition (b).

Location: Ex1 - Flange plates bolted to the web

Shape limitations for flanges curved in elevation

The calculations are in accordance with EN 1993-1-5:2006 "Eurocode 3 Design of steel structures" Part 1-5: Plated structural elements and NA to BS EN 1993-1-5:2006.

Flanges are curved in elevation (Clause 8(2)).
Section comprises of flange plates bolted to the web:

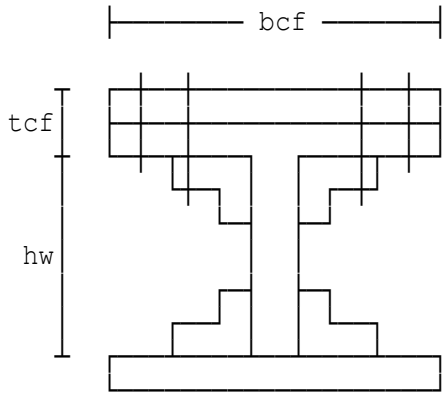

bcf = comp flange width
tcf = comp flange effective thickness

Comp flange radius of curvature	r=5000 mm
Clear web depth between flanges	hw=800 mm
Thickness of web	tw=16 mm
Compression flange width	bcf=450 mm
Compression flange thickness	tcf=35 mm
Yield strength of flange	fyf=345 N/mm²

From BS EN 1993-1-5:2006, Clause 8(2):

LHS term of expression 8.2	ratio1=hw/tw=50
compute	term1=SQR(Aw/Afc)=0.9015
compute	term2=hw*E/(3*r*fyf)=32.464
RHS term of expression 8.2	ratio2=k*E/fyf*term1/(1+term2)^0.5 =52.172

As hw/tw ≤ ratio2 (50 ≤ 52.172), the criterion of Clause 8(2) has been met. Hence satisfactory.

Location: Ex2 - Single flange plates welded to the web

Shape limitations for flanges curved in elevation

The calculations are in accordance with EN 1993-1-5:2006 "Eurocode 3 Design of steel structures" Part 1-5: Plated structural elements and NA to BS EN 1993-1-5:2006.

Flanges are curved in elevation (Clause 8(2)).
Section comprises of single flange plates welded to web:

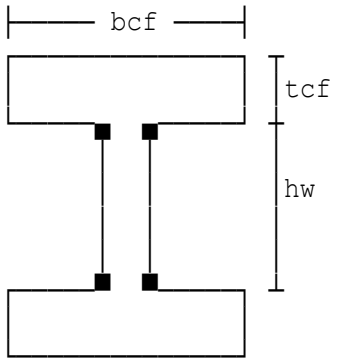

bcf = comp flange width
tcf = comp flange thickness

Comp flange radius of curvature	r=4000 mm
Clear web depth between flanges	hw=900 mm
Thickness of web	tw=15 mm
Compression flange width	bcf=400 mm
Compression flange thickness	tcf=15 mm
Yield strength of flange	fyf=355 N/mm²

From BS EN 1993-1-5:2006, Clause 8(2):

LHS term of expression 8.2	ratio1=hw/tw=60
compute	term1=SQR(Aw/Afc)=1.5
compute	term2=hw*E/(3*r*fyf)=44.366
RHS term of expression 8.2	ratio2=k*E/fyf*term1/(1+term2)^0.5 =72.457

As hw/tw ≤ ratio2 (60 ≤ 72.457), the criterion of Clause 8(2) has been met. Hence satisfactory.

Location: Ex3 - Box girder

Shape limitations for flanges curved in elevation

The calculations are in accordance with EN 1993-1-5:2006 "Eurocode 3 Design of steel structures" Part 1-5: Plated structural elements and NA to BS EN 1993-1-5:2006.

Flanges are curved in elevation (Clause 8(2)).

Section is the flange of an internal panel:

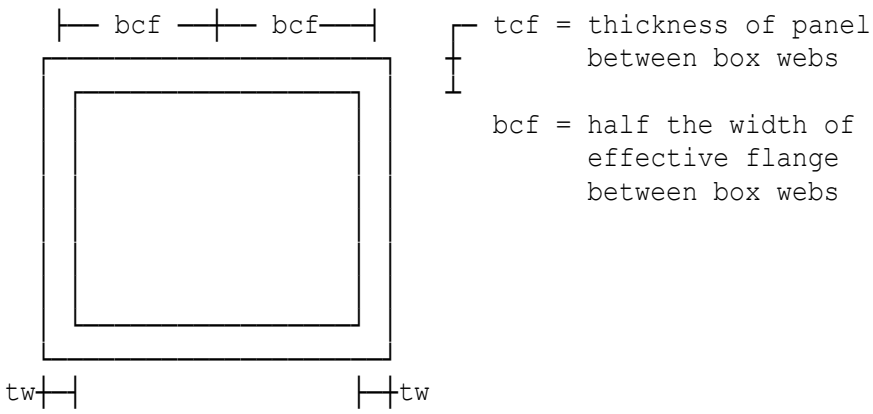

Comp flange radius of curvature r=4000 mm
Clear web depth between flanges hw=900 mm
Thickness of web tw=15 mm
Compression flange width bcf=450 mm
Compression flange thickness tcf=15 mm
Yield strength of flange fyf=355 N/mm²
From BS EN 1993-1-5:2006, Clause 8(2):
LHS term of expression 8.2 ratio1=hw/tw=60
compute term1=SQR(Aw/Afc)=1.4142
compute term2=hw*E/(3*r*fyf)=44.366
RHS term of expression 8.2 ratio2=k*E/fyf*term1/(1+term2)^0.5
=68.313
As hw/tw ≤ ratio2 (60 ≤ 68.313), the criterion of Clause 8(2) has been met. Hence satisfactory.

Location: Ex4 - Several flange plates welded to the web

Shape limitations for flanges curved in elevation

The calculations are in accordance with EN 1993-1-5:2006 "Eurocode 3 Design of steel structures" Part 1-5: Plated structural elements and NA to BS EN 1993-1-5:2006.

Flanges are curved in elevation (Clause 8(2)).
Section comprises of flange plates welded to compression web:

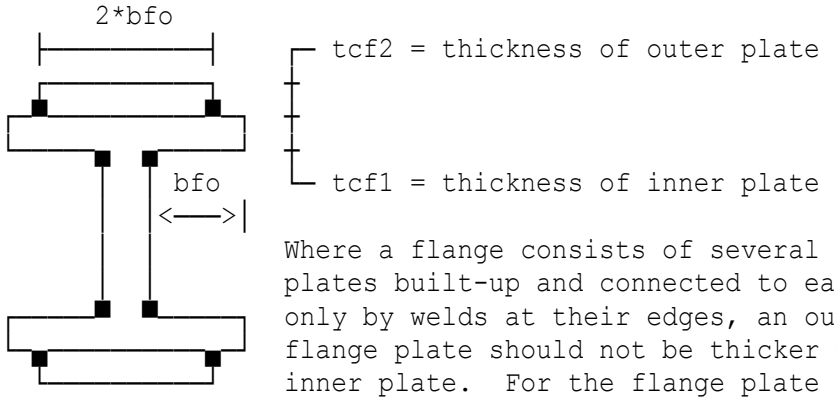

Where a flange consists of several flange plates built-up and connected to each other only by welds at their edges, an outer flange plate should not be thicker than an inner plate. For the flange plate connected to the web, "bfo" should be taken as the width of the outstand measured from the edge to the surface of the web. For all other plates "bfo" should be taken as half the width between the welds connecting it to an inner plate.

Comp flange radius of curvature	r=5000 mm
Clear web depth between flanges	hw=400 mm
Thickness of web	tw=15 mm
Dimension of outstand	bfo=200 mm
Thickness of inner plate	tcf1=20 mm
Thickness of outer plate	tcf2=15 mm
Yield strength of flange	fyf=345 N/mm²

From BS EN 1993-1-5:2006, Clause 8(2):

LHS term of expression 8.2	ratio1=hw/tw=26.667
compute	term1=SQR(Aw/Afc)=0.64775
compute	term2=hw*E/(3*r*fyf)=16.232
RHS term of expression 8.2	ratio2=k*E/fyf*term1/(1+term2)^0.5 =52.24

As hw/tw ≤ ratio2 (26.667 ≤ 52.24), the criterion of Clause 8(2) has been met. Hence satisfactory.

Location: Ex5 - Rolled section

Shape limitations for flanges curved in elevation

The calculations are in accordance with EN 1993-1-5:2006 "Eurocode 3 Design of steel structures" Part 1-5: Plated structural elements and NA to BS EN 1993-1-5:2006.

Flanges are curved in elevation (Clause 8(2)).
Rolled section:

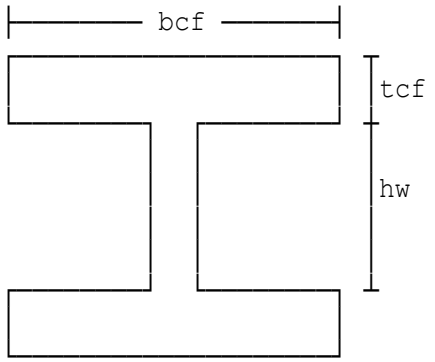

bcf = comp flange width
tcf = comp flange thickness

Comp flange radius of curvature	r=5000 mm
Clear web depth between flanges	hw=1000 mm
Thickness of web	tw=15 mm
Compression flange width	bcf=400 mm
Compression flange thickness	tcf=15 mm
Yield strength of flange	fyf=355 N/mm²

From BS EN 1993-1-5:2006, Clause 8(2):

LHS term of expression 8.2	ratio1=hw/tw=66.667
compute	term1=SQR(Aw/Afc)=1.5811
compute	term2=hw*E/(3*r*fyf)=39.437
RHS term of expression 8.2	ratio2=k*E/fyf*term1/(1+term2)^0.5 =80.898

As hw/tw ≤ ratio2 (66.667 ≤ 80.898), the criterion of Clause 8(2) has been met. Hence satisfactory.

Location: Ex1 - Tube X

Shape limitations for circular hollow sections (Clause 9.3.6)

The calculations are in accordance with BS 5400:Part 3:2000 "Code of Practice for Design of Steel Bridges" as implemented by Departmental Standard BD 13/06. The proforma checks for compliance with the shape limitations to Clause 9.3.6.

Circular hollow sections. Clause 9.3.6.

The ratio of outside diameter to wall thickness of a circular hollow section should not exceed 60√(355/σ).
Nominal yield stress σy sys=355 N/mm²
Outside diameter of section od=170 mm
Wall thickness wt=5 mm
Ratio of outside diameter to wall thickness 34 is less than 60√(355/σ)=60
Section complies with Clause 9.3.6.
Compact sections. Clause 9.3.7.4.
Nominal yield stress σy syc=355 N/mm²
Ratio of outside diameter to wall thickness 34 is less than 46√(355/σy)=46
Section complies with Clause 9.3.7.4.
Section is compact.

Location: Tube X

Shape limitations for circular hollow sections (Clause 9.3.6)

The calculations are in accordance with BS 5400:Part 3:2000 "Code of Practice for Design of Steel Bridges" as implemented by Departmental Standard BD 13/06. The proforma checks for compliance with the shape limitations to Clause 9.3.6.

Circular hollow sections. Clause 9.3.6.

The ratio of outside diameter to wall thickness of a circular hollow section should not exceed 60√(355/σ).
Nominal yield stress σy sys=300 N/mm²
Outside diameter of section od=240 mm
Wall thickness wt=5 mm
Ratio of outside diameter to wall thickness 48 is less than 60√(355/σ)=65.269
Section complies with Clause 9.3.6.
Compact sections. Clause 9.3.7.4.
Nominal yield stress σy syc=355 N/mm²
Ratio of outside diameter to wall thickness 48 exceeds 46√(355/σy)=46
Section does not comply with Clause 9.3.7.4.
Section is not compact.

Location: Tube X

Shape limitations for circular hollow sections (Clause 9.3.6)

The calculations are in accordance with BS 5400:Part 3:2000 "Code of Practice for Design of Steel Bridges" as implemented by Departmental Standard BD 13/06. The proforma checks for compliance with the shape limitations to Clause 9.3.6.

Circular hollow sections. Clause 9.3.6.

The ratio of outside diameter to wall thickness of a circular hollow section should not exceed 60√(355/σ).
Nominal yield stress σy sys=355 N/mm²
Outside diameter of section od=300 mm
Wall thickness wt=4 mm
Ratio of outside diameter to wall thickness 75 exceeds
60√(355/σ)=60
Section does not comply with Clause 9.3.6.
Lesser value of stress. Clause 9.3.1.
For compliance syl=(60/q)^2*355=227.2 N/mm²
Compact sections. Clause 9.3.7.4.
Nominal yield stress σy syc=355 N/mm²
Ratio of outside diameter to wall thickness 75 exceeds
46√(355/σy)=46
Section does not comply with Clause 9.3.7.4.
Section is not compact.

Location: Ex1 - Tube X

Shape limitations for circular hollow sections

The proforma is in accordance with BS EN 1993-2:2006 "Eurocode 3 Design of Steel Structures - Part 2: Steel bridges" and the NA to BS EN 1993-2:2006

The proforma checks the section classification to Clause 5.5.2 of BS EN 1993-2:2006 and Table 5.2 of BS EN 1193-1-1:2005 relating to circular hollow sections.

The ratio of outside diameter of section to wall thickness (D/t) of a circular hollow section should not exceed $90\varepsilon^2$. When $d/t > 90\varepsilon^2$ the section classification is "slender". Reference to BS EN 1993-1-6 is made in Table 5.2 of BS EN 1193-1-1:2005 for slender sections.

Properties of circular hollow sections

Outside diameter of section	D=170 mm
Wall thickness	t=5 mm
Yield strength	fy=355 N/mm²

Location: Ex2 - Tube X

Shape limitations for circular hollow sections

The proforma is in accordance with BS EN 1993-2:2006 "Eurocode 3 Design of Steel Structures - Part 2: Steel bridges" and the NA to BS EN 1993-2:2006

The proforma checks the section classification to Clause 5.5.2 of BS EN 1993-2:2006 and Table 5.2 of BS EN 1193-1-1:2005 relating to circular hollow sections.

The ratio of outside diameter of section to wall thickness (D/t) of a circular hollow section should not exceed $90\varepsilon^2$. When $d/t > 90\varepsilon^2$ the section classification is "slender". Reference to BS EN 1993-1-6 is made in Table 5.2 of BS EN 1193-1-1:2005 for slender sections.

Properties of circular hollow sections

Outside diameter of section	D=240 mm
Wall thickness	t=5 mm
Yield strength	fy=355 N/mm²

Copyright 1986-2024 Fitzroy Systems Ltd.

Location: X3 - Tube X

Shape limitations for circular hollow sections

The proforma is in accordance with BS EN 1993-2:2006 "Eurocode 3 Design of Steel Structures - Part 2: Steel bridges" and the NA to BS EN 1993-2:2006

The proforma checks the section classification to Clause 5.5.2 of BS EN 1993-2:2006 and Table 5.2 of BS EN 1193-1-1:2005 relating to circular hollow sections.

The ratio of outside diameter of section to wall thickness (D/t) of a circular hollow section should not exceed $90\varepsilon^2$. When $d/t > 90\varepsilon^2$ the section classification is "slender". Reference to BS EN 1993-1-6 is made in Table 5.2 of BS EN 1193-1-1:2005 for slender sections.

Properties of circular hollow sections

Outside diameter of section	D=300 mm
Wall thickness	t=4 mm
Yield strength	fy=355 N/mm²

As $D/t > 90\varepsilon^2$ (75 > 59.577), the section classification is "slender" in accordance with Table 5.2 of EC3 Part 1-1. Refer to BS EN 1993-1-6 for further information.

Location: Ex1 - Effective section Panel A

Effective section (Clause 9.4)

The calculations are in accordance with BS 5400:Part 3:2000 "Code of Practice for Design of Steel Bridges" as implemented by Departmental Standard BD 13/06. The proforma calculates the effective sections in accordance with Clause 9.4.

Compression flange is stiffened by three or more open stiffeners.

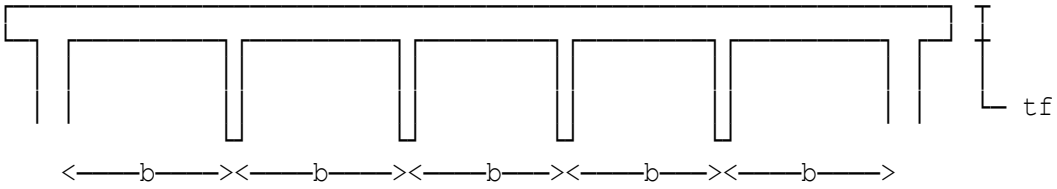

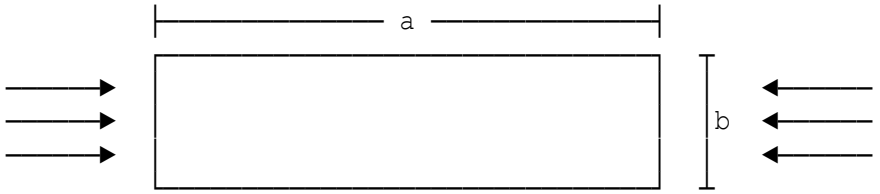

a = panel dimension in direction of stress considered
b = panel dimension normal to the direction of stress

Panel dimension a	a=1500 mm
Breadth between stiffeners	b=300 mm
Thickness of flange plate	tf=12 mm
Nominal yield stress of plate	syf=355 N/mm²
Buckling coefficient Kc	0.9798

Effective web (Clause 9.4.2.5)

Thickness of web	tw=20 mm

Web without effective long. stiffeners in accordance with Cl. 9.11.5.

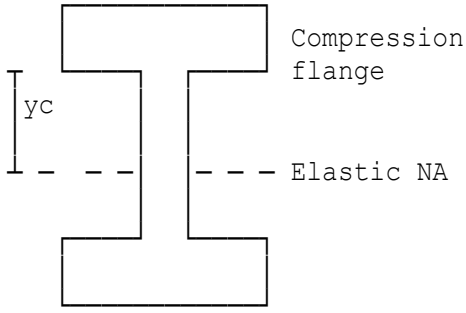

Depth of web measured in its plane from the elastic neutral axis of the gross section of the beam to the compressive edge of the web. Depth yc.

For a beam built in stages, yc should be calculated for the cross section of the beam appropriate to the stage considered.

Depth yc	yc=750 mm
Nominal yield stress of web	syw=345 N/mm²

Effective web thickness twe=tw=20 mm
The area of longitudinal stiffeners should be included for stress analysis only if they are continuous on either side of the section under consideration over a depth equal to the beam. Clause 9.4.2.6.

Location: Effective section Panel A

Effective section (Clause 9.4)

The calculations are in accordance with BS 5400:Part 3:2000 "Code of Practice for Design of Steel Bridges" as implemented by Departmental Standard BD 13/06. The proforma calculates the effective sections in accordance with Clause 9.4.

Compression flange is stiffened by two open stiffeners.

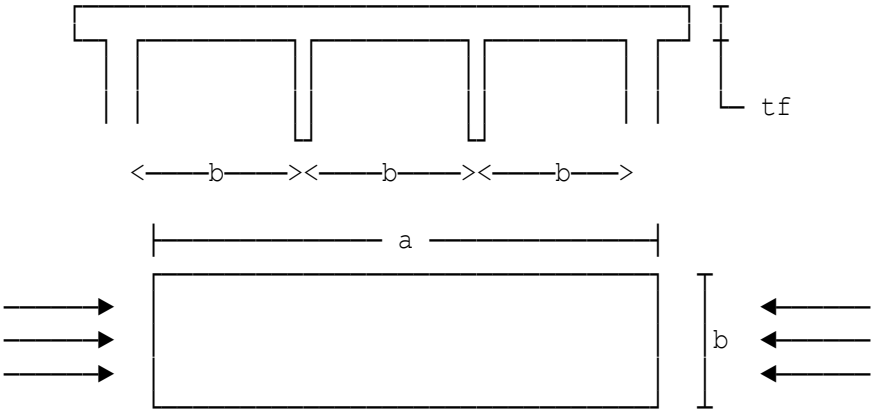

a = panel dimension in direction of stress considered
b = panel dimension normal to the direction of stress

Panel dimension a	a=1500 mm
Breadth between stiffeners	b=300 mm
Thickness of flange plate	tf=12 mm
Nominal yield stress of plate	syf=355 N/mm²
Buckling coefficient Kc	0.97482

Effective web (Clause 9.4.2.5)

Thickness of web	tw=20 mm

Web without effective long. stiffeners in accordance with Cl. 9.11.5.

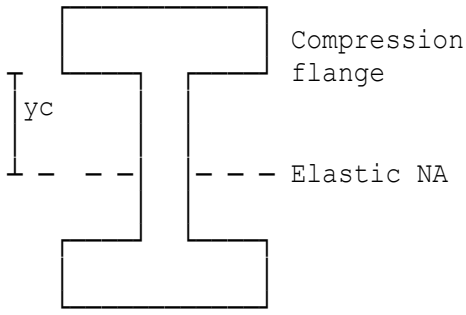

Depth of web measured in its plane from the elastic neutral axis of the gross section of the beam to the compressive edge of the web. Depth yc.

For a beam built in stages, yc should be calculated for the cross section of the beam appropriate to the stage considered.

Depth yc	yc=750 mm
Nominal yield stress of web	syw=345 N/mm²

Effective web thickness twe=tw=20 mm
The area of longitudinal stiffeners should be included for stress analysis only if they are continuous on either side of the section under consideration over a depth equal to the beam. Clause 9.4.2.6.

Location: Effective section Panel A

Effective section (Clause 9.4)

The calculations are in accordance with BS 5400:Part 3:2000 "Code of Practice for Design of Steel Bridges" as implemented by Departmental Standard BD 13/06. The proforma calculates the effective sections in accordance with Clause 9.4.

Compression flange is stiffened by one open stiffener.

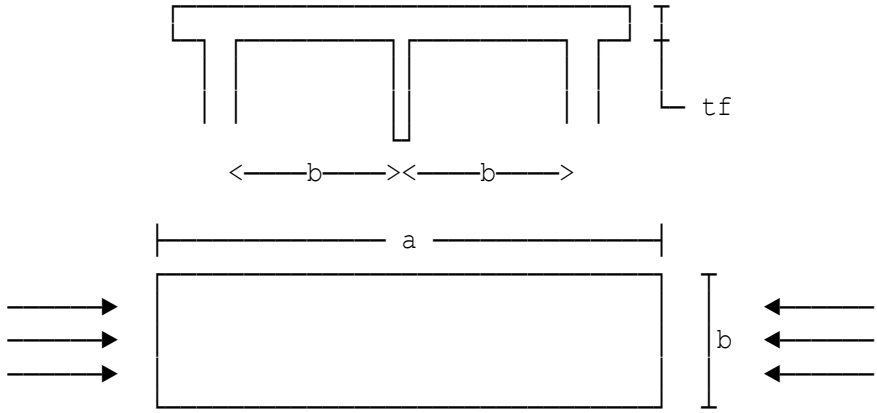

a = panel dimension in direction of stress considered
b = panel dimension normal to the direction of stress

Panel dimension a	a=1500 mm
Breadth between stiffeners	b=300 mm
Thickness of flange plate	tf=12 mm
Nominal yield stress of plate	syf=355 N/mm²
Buckling coefficient Kc	0.96985

Effective web (Clause 9.4.2.5)

Thickness of web	tw=20 mm

Web without effective long. stiffeners in accordance with Cl. 9.11.5.

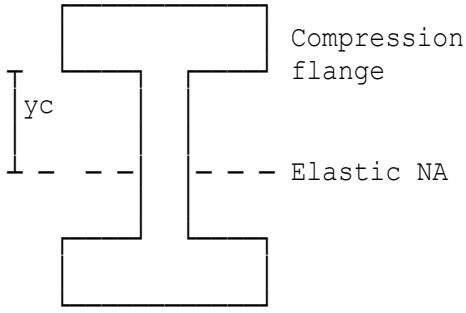

Depth of web measured in its plane from the elastic neutral axis of the gross section of the beam to the compressive edge of the web. Depth yc.

For a beam built in stages, yc should be calculated for the cross section of the beam appropriate to the stage considered.

Depth yc	yc=750 mm
Nominal yield stress of web	syw=345 N/mm²

Effective web thickness twe=tw=20 mm
The area of longitudinal stiffeners should be included for stress analysis only if they are continuous on either side of the section under consideration over a depth equal to the beam. Clause 9.4.2.6.

Location: Effective section Panel A

Effective section (Clause 9.4)

The calculations are in accordance with BS 5400:Part 3:2000 "Code of Practice for Design of Steel Bridges" as implemented by Departmental Standard BD 13/06. The proforma calculates the effective sections in accordance with Clause 9.4.

Compression flange is stiffened by two or more closed stiffeners.

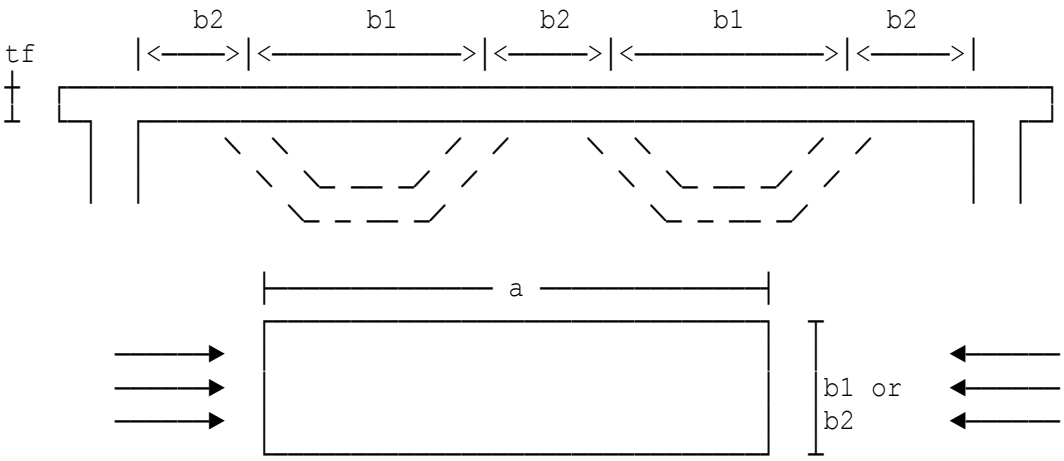

a = panel dimension in direction of stress considered
b = panel dimension normal to the direction of stress

Dimension b1	b1=500 mm
Dimension b2	b2=300 mm
Thickness of flange plate	tf=12 mm
Nominal yield stress of plate	syf=355 N/mm²
Calculate effective area for each panel	
For panel width 500	
Buckling coefficient Kc	0.75895
For panel width 300	
Buckling coefficient Kc	0.9798

Effective web (Clause 9.4.2.5)

Thickness of web	tw=20 mm

Web without effective long. stiffeners in accordance with Cl. 9.11.5.

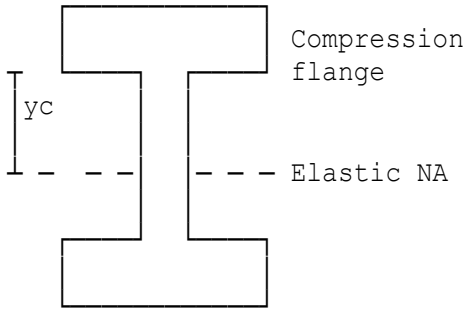

Depth of web measured in its plane from the elastic neutral axis of the gross section of the beam to the compressive edge of the web. Depth yc.

For a beam built in stages, yc should be calculated for the cross section of the beam appropriate to the stage considered.

Depth yc	yc=750 mm
Nominal yield stress of web	syw=345 N/mm²
Effective web thickness	twe=tw=20 mm

The area of longitudinal stiffeners should be included for stress analysis only if they are continuous on either side of the section under consideration over a depth equal to the beam. Clause 9.4.2.6.

Location: Ex1 - Effective section Panel A

Effective section

The proforma is in accordance with BS EN 1993-2:2006 "Eurocode 3 Design of Steel Structures - Part 2: Steel bridges" and the NA to BS EN 1993-2:2006.

The proforma calculates the reduction factor ρ for plate buckling which is needed to evaluate the effective area Aceff in accordance with Clause 4.4 of BS EN 1193-1-5, where Aceff=ρ.Ac.

Compression flange is stiffened by three or more open stiffeners.

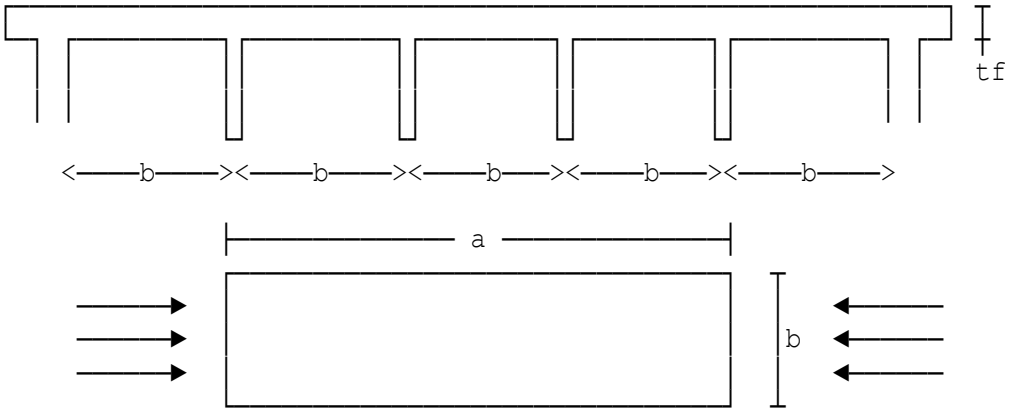

a = panel dimension in direction of stress considered
b = panel dimension normal to the direction of stress

Panel dimension a	a=1500 mm
Breadth between stiffeners	b=300 mm
Thickness of flange plate	tf=12 mm
Yield strength (flange)	fy=355 N/mm²
Buckling factor (Table 4.1)	ks=1

Effective web thickness

Web without effective longitudinal stiffeners.

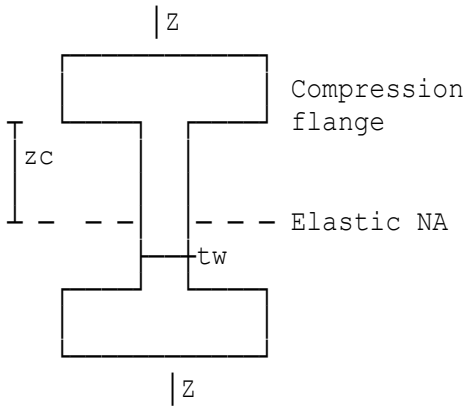

Depth of web measured in its plane from the elastic neutral axis of the gross section of the beam to the compressive edge of the web. Depth zc.

For a beam built in stages, zc should be calculated for the cross section of the beam appropriate to the stage considered.

Depth zc	zc=750 mm
Thickness of web	tw=20 mm
Yield strength (web)	fyw=345 N/mm²
Factor	p=(zc/tw)*SQR(fyw/355)=36.968
Effective web thickness	twe=tw=20 mm

NOTE:
The area of longitudinal stiffeners should be included for stress analysis only if they are continuous on either side of the section under consideration over a depth equal to the beam.

Location: Effective section Panel A

Effective section

The proforma is in accordance with BS EN 1993-2:2006 "Eurocode 3 Design of Steel Structures - Part 2: Steel bridges" and the NA to BS EN 1993-2:2006.

The proforma calculates the reduction factor ρ for plate buckling which is needed to evaluate the effective area Aceff in accordance with Clause 4.4 of BS EN 1193-1-5, where Aceff=ρ.Ac.

Compression flange is stiffened by two open stiffeners.

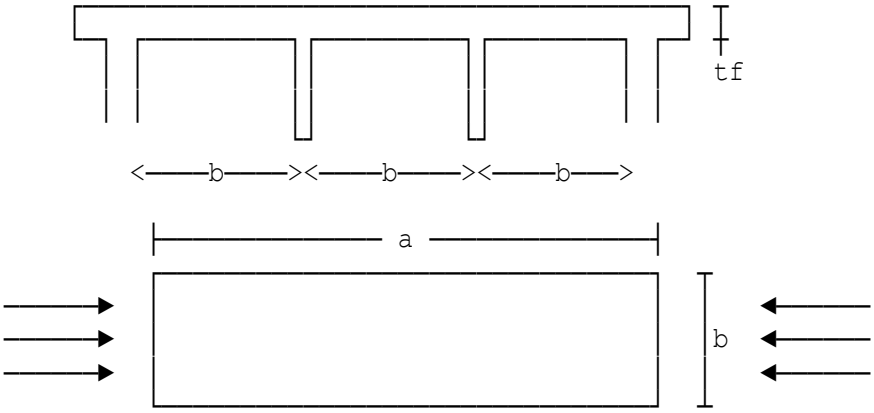

a = panel dimension in direction of stress considered
b = panel dimension normal to the direction of stress

Panel dimension a	a=1500 mm
Breadth between stiffeners	b=300 mm
Thickness of flange plate	tf=12 mm
Yield strength (flange)	fy=355 N/mm²
Buckling factor (Table 4.1)	ks=1

Effective web thickness

Web without effective longitudinal stiffeners.

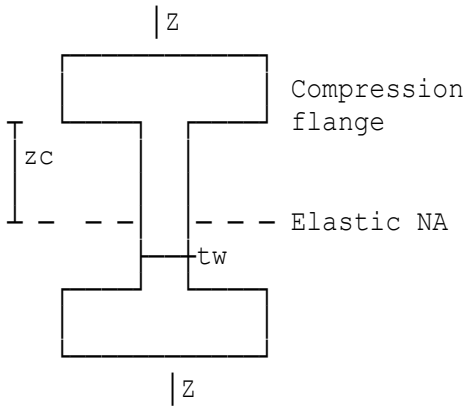

Depth of web measured in its plane from the elastic neutral axis of the gross section of the beam to the compressive edge of the web. Depth zc.

For a beam built in stages, zc should be calculated for the cross section of the beam appropriate to the stage considered.

Depth zc	zc=750 mm
Thickness of web	tw=20 mm
Yield strength (web)	fyw=345 N/mm²
Factor	p=(zc/tw)*SQR(fyw/355)=36.968
Effective web thickness	twe=tw=20 mm

NOTE:
The area of longitudinal stiffeners should be included for stress analysis only if they are continuous on either side of the section under consideration over a depth equal to the beam.

Location: Effective section Panel A

Effective section

The proforma is in accordance with BS EN 1993-2:2006 "Eurocode 3 Design of Steel Structures - Part 2: Steel bridges" and the NA to BS EN 1993-2:2006.

The proforma calculates the reduction factor ρ for plate buckling which is needed to evaluate the effective area Aceff in accordance with Clause 4.4 of BS EN 1193-1-5, where Aceff=ρ.Ac.

Compression flange is stiffened by one open stiffener.

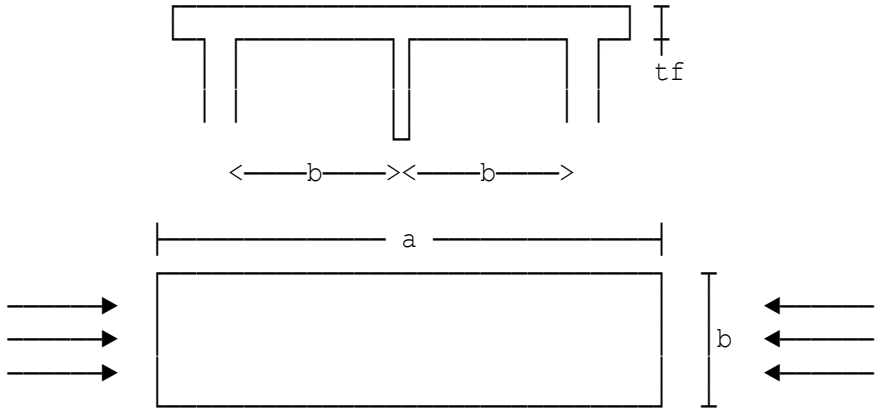

a = panel dimension in direction of stress considered
b = panel dimension normal to the direction of stress

Panel dimension a	a=1500 mm
Breadth between stiffeners	b=300 mm
Thickness of flange plate	tf=12 mm
Yield strength (flange)	fy=355 N/mm²
Buckling factor (Table 4.1)	ks=1

Effective web thickness

Web without effective longitudinal stiffeners.

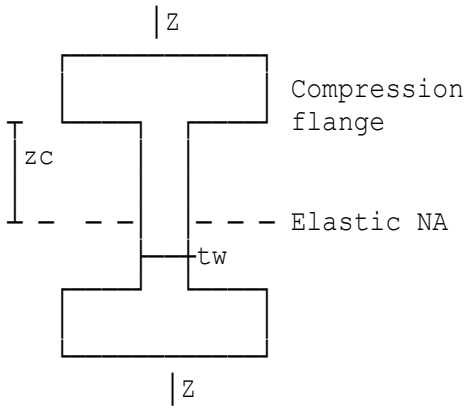

Depth of web measured in its plane from the elastic neutral axis of the gross section of the beam to the compressive edge of the web. Depth zc.

For a beam built in stages, zc should be calculated for the cross section of the beam appropriate to the stage considered.

Depth zc	zc=750 mm
Thickness of web	tw=20 mm
Yield strength (web)	fyw=345 N/mm²
Factor	p=(zc/tw)*SQR(fyw/355)=36.968
Effective web thickness	twe=tw=20 mm

NOTE:
The area of longitudinal stiffeners should be included for stress analysis only if they are continuous on either side of the section under consideration over a depth equal to the beam.

Location: Effective section Panel A

Effective section

The proforma is in accordance with BS EN 1993-2:2006 "Eurocode 3 Design of Steel Structures - Part 2: Steel bridges" and the NA to BS EN 1993-2:2006.

The proforma calculates the reduction factor ρ for plate buckling which is needed to evaluate the effective area Aceff in accordance with Clause 4.4 of BS EN 1193-1-5, where Aceff=ρ.Ac.

Compression flange is stiffened by two or more closed stiffeners.

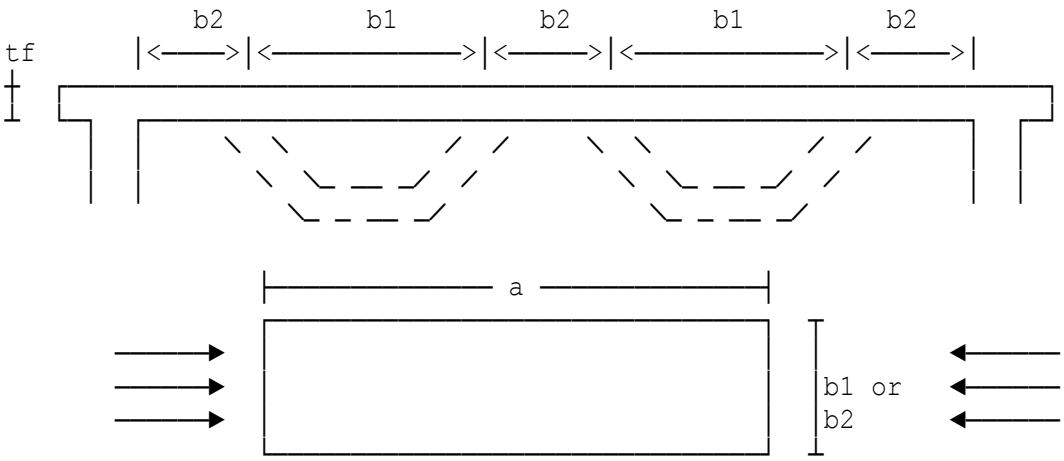

a = panel dimension in direction of stress considered
b = panel dimension normal to the direction of stress

Panel dimension a	a=1500 mm
Dimension b1	b1=500 mm
Dimension b2	b2=350 mm
Yield strength (flange)	fy=355 N/mm²
Buckling factor (Table 4.1)	ks=1

Effective web thickness

Web without effective longitudinal stiffeners.

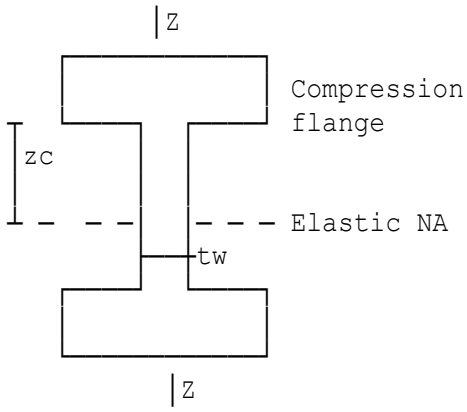

Depth of web measured in its plane from the elastic neutral axis of the gross section of the beam to the compressive edge of the web. Depth zc.

For a beam built in stages, zc should be calculated for the cross section of the beam appropriate to the stage considered.

Depth zc	zc=750 mm
Thickness of web	tw=20 mm
Yield strength (web)	fyw=345 N/mm²
Factor	p=(zc/tw)*SQR(fyw/355)=36.968
Effective web thickness	twe=tw=20 mm

NOTE:
The area of longitudinal stiffeners should be included for stress analysis only if they are continuous on either side of the section under consideration over a depth equal to the beam.

Location: Ex5 - Effective section Panel A

Effective section

The proforma is in accordance with BS EN 1993-2:2006 "Eurocode 3 Design of Steel Structures - Part 2: Steel bridges" and the NA to BS EN 1993-2:2006.

The proforma calculates the reduction factor ρ for plate buckling which is needed to evaluate the effective area Aceff in accordance with Clause 4.4 of BS EN 1193-1-5, where Aceff=ρ.Ac.

Compression flange is unstiffened.

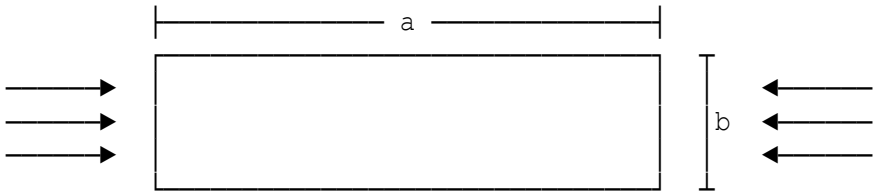

a = panel dimension in direction of stress considered
b = panel dimension normal to the direction of stress

Panel dimension a	a=1500 mm
Panel dimension b	b=300 mm
Thickness of flange plate	tf=12 mm
Yield strength (flange)	fy=345 N/mm²
Buckling factor (Table 4.1)	ks=1

Effective web thickness

Web without effective longitudinal stiffeners.

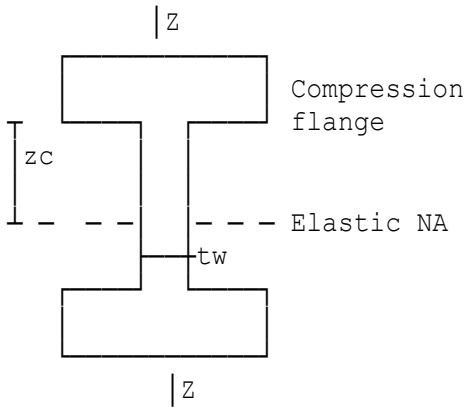

Depth of web measured in its plane from the elastic neutral axis of the gross section of the beam to the compressive edge of the web. Depth zc.

For a beam built in stages, zc should be calculated for the cross section of the beam appropriate to the stage considered.

Depth zc	zc=750 mm
Thickness of web	tw=20 mm
Yield strength (web)	fyw=355 N/mm²
Factor	p=(zc/tw)*SQR(fyw/355)=37.5
Effective web thickness	twe=tw=20 mm

NOTE:
The area of longitudinal stiffeners should be included for stress analysis only if they are continuous on either side of the section

under consideration over a depth equal to the beam.

Location: Ex6 - As Ex4 but with one closed stiffener

Effective section

The proforma is in accordance with BS EN 1993-2:2006 "Eurocode 3 Design of Steel Structures - Part 2: Steel bridges" and the NA to BS EN 1993-2:2006.

The proforma calculates the reduction factor ρ for plate buckling which is needed to evaluate the effective area Aceff in accordance with Clause 4.4 of BS EN 1193-1-5, where Aceff=ρ.Ac.

Compression flange is stiffened by one closed stiffener.

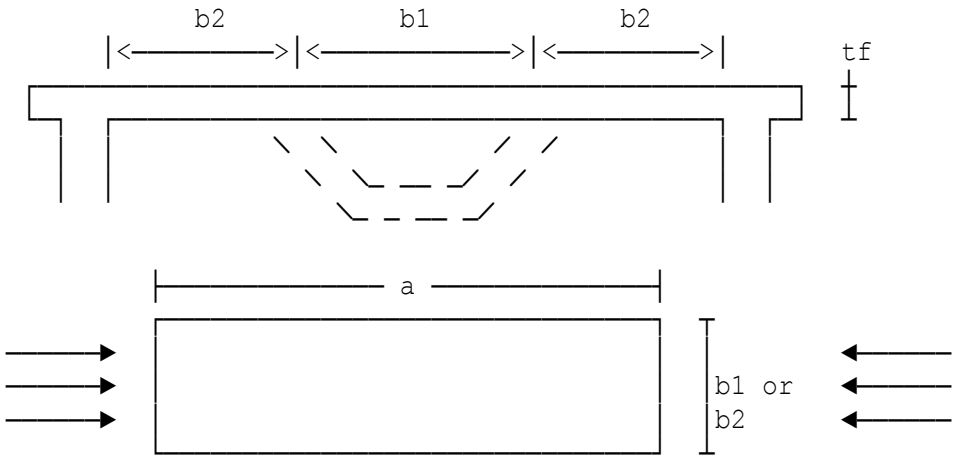

a = panel dimension in direction of stress considered
b = panel dimension normal to the direction of stress

Panel dimension a	a=1500 mm
Dimension b1	b1=500 mm
Dimension b2	b2=350 mm
Yield strength (flange)	fy=355 N/mm²
Buckling factor (Table 4.1)	ks=1

Effective web thickness

Web without effective longitudinal stiffeners.

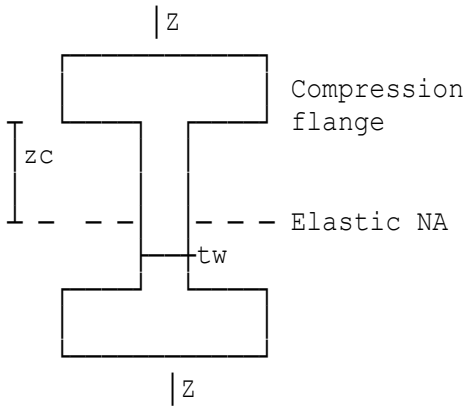

Depth of web measured in its plane from the elastic neutral axis of the gross section of the beam to the compressive edge of the web. Depth zc.

For a beam built in stages, zc should be calculated for the cross section of the beam appropriate to the stage considered.

Depth zc	zc=900 mm
Thickness of web	tw=15 mm
Yield strength (web)	fyw=355 N/mm²
Factor	p=(zc/tw)*SQR(fyw/355)=60
Effective web thickness	twe=tw=15 mm

NOTE:
The area of longitudinal stiffeners should be included for stress analysis only if they are continuous on either side of the section under consideration over a depth equal to the beam.

Location: Ex1 - Girder S

Radius of curvature of flange	Rf=10000 mm
Flange outstand	bfo=150 mm
Flange thickness	tfo=15 mm
Longitudinal stress in flange σf	sigf=300 N/mm²
Flange panel width	b=400 mm
Flange thickness	tf=15 mm
Longitudinal stress in flange σf	sigf=300 N/mm²

Location: Girder S

Stress σ1	sigma1=150 N/mm²
Stress σ2	sigma2=125 N/mm²

Location: Girder S

Stress σ1	sigma1=250 N/mm²
Stress σ2	sigma2=200 N/mm²

Location: Girder S

Location: Girder S

Location: Girder S

Copyright 1986-2024 Fitzroy Systems Ltd.

Location: Girder S

Slope of flange to vertical α	alpha=80°
Force in flange	P=1000 kN

Copyright 1986-2024 Fitzroy Systems Ltd.

Location: Ex1 - Girder S

Radius of curvature of flange	Rf=10000 mm
Flange outstand	bfo=150 mm
Flange thickness	tfo=15 mm
Longitudinal stress in flange σf	sigf=300 N/mm²
Flange panel width	b=400 mm
Flange thickness	tf=15 mm

Location: Ex2 - Girder S

Stress σ1	sigma1=150 N/mm²
Stress σ2	sigma2=125 N/mm²

Copyright 1986-2024 Fitzroy Systems Ltd.

Location: Ex3 - Girder S

Stress σ1	sigma1=250 N/mm²
Stress σ2	sigma2=200 N/mm²

Location: Ex4 - Girder S

Copyright 1986-2024 Fitzroy Systems Ltd.

Location: Ex5 - Girder S

Copyright 1986-2024 Fitzroy Systems Ltd.

Location: Ex6 - Girder S

Copyright 1986-2024 Fitzroy Systems Ltd.

Location: Ex7 - Girder S

Slope of flange to vertical α	alpha=80°
Force in flange	P=1000 kN

Location: Ex8 - Girder S

Radius of curvature of flange	Rf=10000 mm
Flange outstand	bfo=150 mm
Flange thickness	tfo=15 mm
Longitudinal stress in flange σf	sigf=300 N/mm²

Location: Ex9 - Girder S

Radius of curvature of flange	Rf=10000 mm
Flange panel width	b=400 mm
Flange thickness	tf=15 mm
Longitudinal stress in flange σf	sigf=300 N/mm²

Location: Ex1 - Edge beam

Effective length for lateral torsional buckling (Clause 9.6)

The calculations are in accordance with BS 5400:Part 3:2000 "Code of Practice for Design of Steel Bridges" as implemented by Departmental Standard BD 13/06.

The proforma calculates the effective length for lateral torsional buckling in accordance with Clause 9.6.
Beams (other than cantilevers) without intermediate lateral restraint. Clause 9.6.2.

Single span beams

Span of beam between lateral restraints at supports.
Span L L=25000 mm
All beams should be restrained at their supports against rotation

Where there is no intermediate lateral restraint to a compression flange, the effective length le should be taken as:

le=k1.k2.ke.L
Factor k1=1.0
Factor k2=1.2

Effective length factor ke :

$$ke = \left[\frac{1}{1 - \frac{60*E*tfmax*\beta*\delta t*Rv}{W*(L/ry)^3*v^4}} \right]^{0.5}$$

Consider end 1:
Max thickness of comp. flange in span tfmax=20 mm
Vertical reaction at support Rv1=1500 kN
Total vertical load on span W=3500 kN
Deflection δt deltat=0.01 mm
Coefficient β beta1=1
Radius of gyration ry=100 mm
Factor v v=0.9
Consider end 2:
Vertical reaction at support Rv2=2000 kN
Coefficient β beta2=1
Effective length (Cl.9.6.2(a)) le=k1*k2*ke*L=32296 mm

Location: Edge beam

Effective length for lateral torsional buckling (Clause 9.6)

The calculations are in accordance with BS 5400:Part 3:2000 "Code of Practice for Design of Steel Bridges" as implemented by Departmental Standard BD 13/06.

The proforma calculates the effective length for lateral torsional buckling in accordance with Clause 9.6.
Cantilevers without intermediate lateral restraints. Clause 9.6.3.

Length of cantilever	L=10000 mm
Factor from Table 8	q=1.4
Effective length	le=q*L=14000 mm

Copyright 1986-2024 Fitzroy Systems Ltd.

Location: Edge beam

Effective length for lateral torsional buckling (Clause 9.6)

The calculations are in accordance with BS 5400:Part 3:2000 "Code of Practice for Design of Steel Bridges" as implemented by Departmental Standard BD 13/06.

The proforma calculates the effective length for lateral torsional buckling in accordance with Clause 9.6.
Beams with fully effective lateral restraints at the level of the compression flange. Clause 9.6.4.1.1.1.
Number of intermediate restraints nr=2

Length	L(1)=10000 mm
Length	L(2)=15000 mm
Length	L(3)=12500 mm

Effective length le	15000 mm

Location: Edge beam

Effective length for lateral torsional buckling (Clause 9.6)

The calculations are in accordance with BS 5400:Part 3:2000 "Code of Practice for Design of Steel Bridges" as implemented by Departmental Standard BD 13/06.

The proforma calculates the effective length for lateral torsional buckling in accordance with Clause 9.6.
Beam restrained by discrete U-frame restraints. Clause 9.6.4.1.3.
Intermediate restraint to the compression flange is provided only by U-frames in accordance with Clause 9.12.3, le should be calculated in accordance with Clause 9.6.4.1.1.2.

Span	L=15000 mm
Second moment of area Ic	Ic=360E6 mm⁴
Young's modulus of steel	E=205000 N/mm²
Factor k2=1.2	
U-frame spacing	lR=3000 mm

U-frame is symmetrical with cross members and verticals of constant second moment of area throughout their lengths.

Distance B	B=5000 mm
Distance d1	d1=1250 mm
Distance d2	d2=1500 mm
Second moment of area I1	I1=400E6 mm⁴
Second moment of area I2	I2=500E6 mm⁴
Factor u	u=0.5
Factor f	f=20E-12 rd/Nmm
Total lateral deflection	deltaR=deltav+deltab+deltar =0.10782E-3 mm
Deflection δ1	delta1=0.21E-3 mm
Deflection δ2	delta2=0.22E-3 mm
Effective length from Cl.9.6.2(a)	lea=7774.6 mm
Effective length from Cl.9.6.2(b)	leb=5483.4 mm
Effective length when k3 is 1.0	le=lea=7774.6 mm

Location: Edge beam

Effective length for lateral torsional buckling (Clause 9.6)

The calculations are in accordance with BS 5400:Part 3:2000 "Code of Practice for Design of Steel Bridges" as implemented by Departmental Standard BD 13/06.

The proforma calculates the effective length for lateral torsional buckling in accordance with Clause 9.6.
Deck is connected to an unstiffened web, either directly or via the tension flange, over the length of the beam in accordance with Clause 9.12.4.2. The effect of the restraint should be allowed for by assuming that the deck and webs of the main beams comprise a continuous series of effective U-frames of unit length longitudinally.
The effective length should be calculated in accordance with Clause 9.6.4.1.3 with length lR equal to unity and deflection deltaR equal to the lateral deflection which would occur in an effective U-frame at the level of the centroid of the flange being considered when a unit force acts laterally to the effective U-frame only at this point and simultaneously at each corresponding point on the other flange or flanges connecting to the same effective U-frame.
le should be calculated in accordance with Clause 9.6.4.1.1.2

Span	L=15000 mm
Second moment of area Ic	Ic=360E6 mm^4
Young's modulus of steel	E=205000 N/mm^2

Factor k2=1.2
The deck and webs of the beam are of constant thickness throughout the span and the beam of constant depth.

Distance B	B=5000 mm
Distance d1	d1=1250 mm
Distance d2	d2=1500 mm
Second moment of area I1	I1=400E6 mm^4

Second moment of area I2 I2=500E6 mm^4

Factor u u=0.5
Total lateral deflection deltaR=deltav+deltab=62.818E-6 mm
Deflection δ1 delta1=0.21E-3 mm
Deflection δ2 delta2=0.22E-3 mm
Effective length:

leb=PI*k2*SQR(E*Ic*(delta1+delta2)/L)=5483.4 mm

Effective length from Cl.9.6.2(a) lea=1126.6 mm
Effective length from Cl.9.6.2(b) leb=5483.4 mm
Effective length when k3 is 1.0 le=leb=5483.4 mm

Location: Ex6 - As Ex1 but continuous beam

Effective length for lateral torsional buckling (Clause 9.6)

The calculations are in accordance with BS 5400:Part 3:2000 "Code of Practice for Design of Steel Bridges" as implemented by Departmental Standard BD 13/06.

The proforma calculates the effective length for lateral torsional buckling in accordance with Clause 9.6.
Beams (other than cantilevers) without intermediate lateral restraint. Clause 9.6.2.

Continuous beams

Span of beam between lateral restraints at supports.
For continuous beams it is the larger of the adjacent spans.
Span L L=25000 mm
All beams should be restrained at their supports against rotation

Where there is no intermediate lateral restraint to a compression flange, the effective length le should be taken as:

le=k1.k2.ke.L
Factor k1=1.0
Factor k2=1.2

Effective length factor ke :

$$ke = \left[\frac{1}{1 - \frac{60*E*tfmax*\beta*\delta t*Rv}{W*(L/ry)^3*v^4}} \right]^{0.5}$$

Consider end 1:
Max thickness of comp. flange in span tfmax=20 mm
Vertical reaction at support Rv1=1500 kN
Total vertical load on span W=3500 kN
Deflection δt deltat=0.01 mm
Coefficient β beta1=1
Radius of gyration ry=100 mm
Factor v v=0.9
Consider end 2:
Vertical reaction at support Rv2=2000 kN
Coefficient β beta2=1
Effective length (Cl.9.6.2(a)) le=k1*k2*ke*L=32296 mm

$$le= k1*k2*\Sigma L*\left[\frac{1}{1 + \frac{2*(\Sigma L)^3}{\pi^4*E*Ic*(\delta i+(\delta e/2))}} \right]^{0.5}$$

Sum of lengths of adjacent spans sumL=50000 mm
Second moment of area Ic Ic=360E6 mm^4
Deflection δi deltai=23 mm
Deflection δe deltae=24 mm

Effective length:

```
 leb=k1*k2*sumL*SQR(1/(1+(2*sumL^3)/(PI^4*E*Ic*(deltai+deltae/2))))
    =59970 mm
```

Effective length (leb governs) le=59970 mm

Location: Ex1 - Edge beam

Effective length for lateral torsional buckling

The proforma is in accordance with BS EN 1993-2:2006 "Eurocode 3 Design of Steel Structures - Part 2: Steel bridges" and the NA to BS EN 1993-2:2006.

The proforma calculates the effective length for lateral torsional buckling using the same approach used in BS 5400-3:2000.

Beams (other than cantilevers) without intermediate lateral restraint.

Single span beams

Span of beam between lateral restraints at supports.
Span L L=25000 mm
All beams should be restrained at their supports against rotation

Where there is no intermediate lateral restraint to a compression flange, the effective length le should be taken as:

le=k1.k2.ke.L
Factor k1=1.0
Factor k2=1.2

Effective length factor ke :

$$ke = \left[\frac{1}{1 - \frac{60*E*tfmax*\beta*\delta t*Rv}{W*(L/rz)^3*v^4}} \right]^{0.5}$$

Consider end 1:
Max thickness of comp.flange in span tfmax=20 mm
Vertical reaction at support Rv1=1500 kN
Total vertical load on span W=3500 kN
Deflection δt deltat=0.01 mm
Coefficient β beta1=1
Radius of gyration rz=100 mm
Slenderness factor v v=0.9
Consider end 2:
Vertical reaction at support Rv2=2000 kN
Coefficient β beta2=1
Value of ke2 governs ke=ke2=1.0786
Effective length le=k1*k2*ke*L=32359 mm

Location: Edge beam

Effective length for lateral torsional buckling

The proforma is in accordance with BS EN 1993-2:2006 "Eurocode 3 Design of Steel Structures - Part 2: Steel bridges" and the NA to BS EN 1993-2:2006.

The proforma calculates the effective length for lateral torsional buckling using the same approach used in BS 5400-3:2000.

Cantilevers without intermediate lateral restraints.

Length of cantilever	L=10000 mm
Factor from table	q=1.4
Effective length	le=q*L=14000 mm

Location: Edge beam

Effective length for lateral torsional buckling

The proforma is in accordance with BS EN 1993-2:2006 "Eurocode 3 Design of Steel Structures - Part 2: Steel bridges" and the NA to BS EN 1993-2:2006.

The proforma calculates the effective length for lateral torsional buckling using the same approach used in BS 5400-3:2000.

Beams with fully effective lateral restraints at the level of the compression flange.
Number of intermediate restraints nr=2

Length	L(1)=10000 mm
Length	L(2)=15000 mm
Length	L(3)=12500 mm

Effective length le	15000 mm

Location: Ex4- Edge beam

Effective length for lateral torsional buckling

The proforma is in accordance with BS EN 1993-2:2006 "Eurocode 3 Design of Steel Structures - Part 2: Steel bridges" and the NA to BS EN 1993-2:2006.

The proforma calculates the effective length for lateral torsional buckling using the same approach used in BS 5400-3:2000.

Beam restrained by discrete U-frame restraints.
Intermediate restraint to the compression flange is provided only by U-frames.

Span	L=15000 mm
Second moment of area Ic	Ic=360E6 mm^4
Young's modulus of steel	E=210000 N/mm^2
Factor k2=1.2	
U-frame spacing	lR=3000 mm

U-frame is symmetrical with cross members and verticals of constant second moment of area throughout their lengths.

Distance B	B=5000 mm
Distance d1	d1=1250 mm
Distance d2	d2=1500 mm
Second moment of area I1	I1=400E6 mm^4
Second moment of area I2	I2=500E6 mm^4
Factor u	u=0.5
Factor f	f=20E-12 rd/Nmm
Total lateral deflection	deltaR=deltav+deltab+deltar =0.10632E-3 mm
Deflection δ1	delta1=0.21E-3 mm
Deflection δ2	delta2=0.22E-3 mm
Effective length (case 1)	lea=7809.4 mm
Effective length (case 2)	leb=5549.8 mm
Effective length when k3 is 1.0	le=lea=7809.4 mm

Copyright 1986-2024 Fitzroy Systems Ltd.

Location: Ex5 - Edge beam

Effective length for lateral torsional buckling

The proforma is in accordance with BS EN 1993-2:2006 "Eurocode 3 Design of Steel Structures - Part 2: Steel bridges" and the NA to BS EN 1993-2:2006.

The proforma calculates the effective length for lateral torsional buckling using the same approach used in BS 5400-3:2000.

Deck is connected to an unstiffened web, either directly or via the tension flange, over the length of the beam. The effect of the restraint should be allowed for by assuming that the deck and webs of the main beams comprise a continuous series of effective U-frames of unit length longitudinally.
The effective length should be calculated with length lR equal to unity and deflection deltaR equal to the lateral deflection which would occur in an effective U-frame at the level of the centroid of the flange being considered when a unit force acts laterally to the effective U-frame only at this point and simultaneously at each corresponding point on the other flange or flanges connecting to the same effective U-frame.

Span	L=15000 mm
Second moment of area Ic	Ic=360E6 mm^4
Young's modulus of steel	E=210000 N/mm^2

Factor k2=1.2
The deck and webs of the beam are of constant thickness throughout the span and the beam of constant depth.

Distance B	B=5000 mm
Distance d1	d1=1250 mm
Distance d2	d2=1500 mm
Second moment of area I1	I1=400E6 mm^4

Second moment of area I2 I2=500E6 mm^4

Factor u u=0.5
Total lateral deflection deltaR=deltav+deltab=61.322E-6 mm
Deflection δ1 delta1=0.21E-3 mm
Deflection δ2 delta2=0.22E-3 mm
Effective length:

leb=PI*k2*SQR(E*Ic*(delta1+delta2)/L)=5549.8 mm

Effective length (case 1) lea=1126.6 mm
Effective length (case 2) leb=5549.8 mm
Effective length when k3 is 1.0 le=leb=5549.8 mm

Location: Ex6 - As Ex1 but continuous beam

Effective length for lateral torsional buckling

The proforma is in accordance with BS EN 1993-2:2006 "Eurocode 3 Design of Steel Structures - Part 2: Steel bridges" and the NA to BS EN 1993-2:2006.

The proforma calculates the effective length for lateral torsional buckling using the same approach used in BS 5400-3:2000.

Beams (other than cantilevers) without intermediate lateral restraint.

Continuous beams

Span of beam between lateral restraints at supports.
For continuous beams it is the larger of the adjacent spans.
Span L L=25000 mm
All beams should be restrained at their supports against rotation

Where there is no intermediate lateral restraint to a compression flange, the effective length le should be taken as:

le=k1.k2.ke.L
Factor k1=1.0
Factor k2=1.2

Effective length factor ke :

$$ke = \left[\frac{1}{1 - \frac{60*E*tfmax*\beta*\delta t*Rv}{W*(L/rz)^3*v^4}} \right]^{0.5}$$

Consider end 1:
Max thickness of comp.flange in span tfmax=20 mm
Vertical reaction at support Rv1=1500 kN
Total vertical load on span W=3500 kN
Deflection δt deltat=0.01 mm
Coefficient β beta1=2
Radius of gyration rz=100 mm
Slenderness factor v v=0.9
Consider end 2:
Vertical reaction at support Rv2=2000 kN
Coefficient β beta2=2
Value of ke2 governs ke=ke2=1.1793
Effective length le=k1*k2*ke*L=35378 mm

$$le= k1*k2*\Sigma L*\left[\frac{1}{1 + \frac{2*(\Sigma L)^3}{\pi^4*E*Ic*(\delta i+(\delta e/2))}} \right]^{0.5}$$

Sum of lengths of adjacent spans sumL=50000 mm
Second moment of area Ic Ic=360E6 mm^4
Deflection δi deltai=0.01 mm
Deflection δe deltae=0.01 mm

Effective length:

```
 leb=k1*k2*sumL*SQR(1/(1+(2*sumL^3)/(PI^4*E*Ic*(deltai+deltae/2))))
    =33215 mm
```

Effective length (lea governs) le=35378 mm

Location: Ex7- Edge beam using parameters kA and kB

Effective length for lateral torsional buckling

The proforma is in accordance with BS EN 1993-2:2006 "Eurocode 3 Design of Steel Structures - Part 2: Steel bridges" and the NA to BS EN 1993-2:2006.

The proforma calculates the effective length for lateral torsional buckling using the same approach used in BS 5400-3:2000.

Beam restrained by discrete U-frame restraints.
Intermediate restraint to the compression flange is provided only by U-frames.

Span 1	L(1)=10000 mm
Span 2	L(2)=10000 mm
Second moment of area Ic	Ic=360E6 mm^4
Young's modulus of steel	E=210000 N/mm^2
End A	kA=50 kNm
End B	kB=50 kNm
Factor k1	k1=0.5+0.5/(1+0.425*p)=0.9986
Factor k2=1.2	
U-frame spacing	lR=3000 mm

U-frame is symmetrical with cross members and verticals of constant second moment of area throughout their lengths.

Distance B	B=5000 mm
Distance d1	d1=1250 mm
Distance d2	d2=1500 mm
Second moment of area I1	I1=400E6 mm^4
Second moment of area I2	I2=500E6 mm^4
Factor u	u=0.5

Factor f	f=20E-12 rd/Nmm
Total lateral deflection	deltaR=deltav+deltab+deltar =0.10632E-3 mm
Deflection δ1	delta1=0.21E-3 mm
Deflection δ2	delta2=0.22E-3 mm
Deflection δi	deltai=0.01 mm
Deflection δe	deltae=0.22E-3 mm

Effective length:

```
 leb=k1*k2*sumL*SQR(1/(1+(2*sumL^3)/(PI^4*E*Ic*(deltai+deltae/2))))
    =21744 mm
```

Effective length (case 1)	lea=7809.4 mm
Effective length (case 2)	leb=21744 mm
Effective length when k3 is 1.0	le=leb=21744 mm

Location: Ex1 - Slenderness, moment and shear resistance

The calculations are in accordance with BS 5400-3:2000" entitled " Code of Practice for Design of Steel Bridges " as implemented by Departmental Standard BD 13/06.

Slenderness lamLT

The proforma calculates the slenderness parameter lambdaLT in accordance with BS 5400-3:2000 Clause 9.7.
I, Channel, Tee or Angle sections (Clause 9.7.2).

Half wavelength of buckling	lw=10400 mm
Effective length to Clause 9.6	le=10400 mm
2nd moment of area @ minor axis	Iyy=133E6 mm⁴
Cross sectional area	A=32300 mm²
Factor k4	k4=0.9
Simply supported mid-span moment	Mm=-236.98 kNm
Overall depth of section	D=918.5 mm
Mean flange thickness	tf=27.9 mm
For a uniform section	
Slenderness parameter	lamLT=(le/ry)*k4*eta*v=119.61

Limiting moment of resistance

The proforma calculates the limiting moment of resistance MR in accordance with Clause 9.8.

Ratio le/lw	rat2=le/lw=1
Section is compact in accordance with Clause 9.3.7	
Moment of resistance of section	Mult=3770 kNm
Mpe as defined in Clause 9.7.1	Mpe=Mult=3770 kNm
Nominal yield stress comp.flange	syc=345 N/mm²
Nominal yield stress tens.flange	syt=345 N/mm²
Nominal yield stress of web	syw=345 N/mm²
Slenderness ratio lambdalt	lamb=lamLT=119.61
	n=0.008*lw/le*(beta-30)=0.7033

MR=((1+(1+n)*5700/beta^2)-SQR((1+(1+n)*5700/beta^2)^2-22800/beta^2))
=0.5828

Limiting moment of resistance	MR=MR*Mult*0.5=1098.6 kNm

Bending resistance

The proforma calculates the bending resistance of beams without longitudinal stiffeners in accordance with Clause 9.9.

Partial factor on yield strength	gm=1.05
Partial factor gammaf3	gf3=1.1
Bending resistance	MD=MR/(gm*gf3)=951.15 kNm

Calculations for the bending resistance ignoring web contribution Mf from Clause 9.9.3.1.

Area of effective tension flange	Ate=8523 mm²
Partial factor on yield strength	gmt=1.05
Partial factor gammaf3	gf3=1.1
Area of effective compr. flange	Ace=8523 mm²
Elastic modulus of the section	Zxc=9.5E6 mm³

Limiting stress (comp. flange) syc=syc2=115.64 N/mm²
Partial factor on comp. strength gmc=1.05
Partial factor gammaf3 gf3=1.1
Force in compression flange Ffc=(Ace*syc)/(gmc*gf3*1E3)=853.33 kN
Bending resistance is based on flange with lower value of force.
Bending resistance Mf=Ffc*df/1E3=759.98 kNm

Shear resistance of a web of a beam with transverse stiffeners at supports and with or without intermediate transverse stiffeners

The result is the shear capacity of a web panel under pure shear calculated using Clause 9.9.2 Shear Resistance.
Depth of web dwe=862.7 mm
Clear length of panel a=10400 mm
Web thickness tw=17.3 mm
Half eff.breadth of flanges bfe is the smaller of the following:
1. The result of the expression bfe1=10*tf*SQR(355/syf)=283.01 mm
2. The distance from the mid-plane of the web to the nearer edge of the flange bfe2=152.75 mm

Non-dimensional value of plastic moment of resistance of flange:
mfw=(syf*bfe*tf*tf)/(2*syw*dwe*dwe*tw)=0.0046174

Shear resistance results from analysis

Shear resistance of web panel under pure shear.
Limiting shear stress (τl) 199.19 N/mm²
Resistance VD=(tw*(dw-hh)*taul1)/(gm*gf3*1000)
=2740.3 kN

Shear resistance of web panel under pure shear
ignoring flange capacity i.e. taking mfw=0.
Limiting shear stress (τl) 199.19 N/mm²
Resistance VR=(tw*(dw-hh)*taul2)/(gm*gf3*1000)
=2740.3 kN

Combined bending and shear in web sections

Web with intermediate transverse stiffeners. Clause 9.9.3.1.
Maximum shear force in panel V=182.3 kN
Maximum bending moment M=947.9 kNm

RESULTS FROM ANALYSIS

MD design capacity in bending VD design capacity in shear
Mf bending capacity ignoring web VR shear capacity ignoring flanges

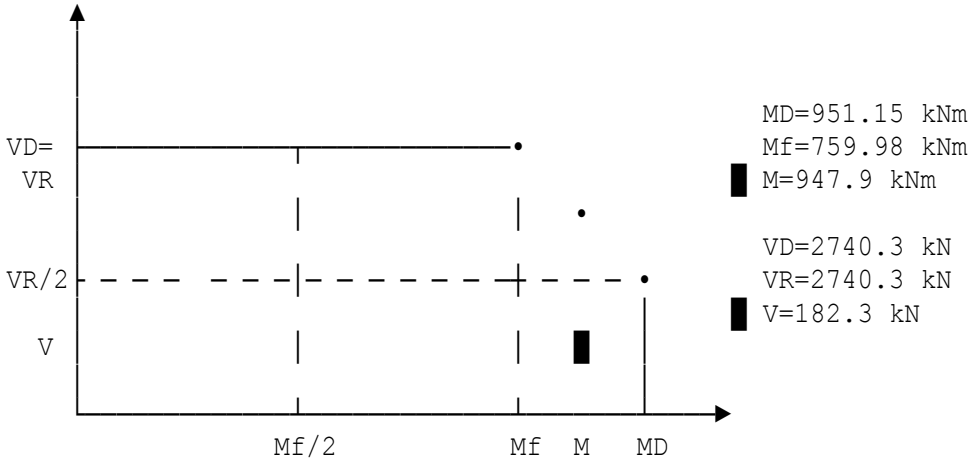

Interaction between shear and bending resistances

Maximum bending moment 947.9 kNm is within interaction curve.
Maximum shear force 182.3 kN is within interaction curve.
Interaction relationship satisfied.

Location: Ex2 - SHS edge beam (500x500x16 SHS)

The calculations are in accordance with BS 5400-3:2000" entitled " Code of Practice for Design of Steel Bridges " as implemented by Departmental Standard BD 13/06.

Slenderness lamLT

The proforma calculates the slenderness parameter lambdaLT in accordance with BS 5400-3:2000 Clause 9.7.
Rectangular or trapezoidal box sections (Clause 9.7.3.1).

Half wavelength of buckling	lw=9000 mm
Effective length to Clause 9.6	le=9000 mm
2nd moment of area @ major axis	Ixx=1.21E9 mm⁴
2nd moment of area @ minor axis	Iyy=1.21E9 mm⁴
Cross sectional area	A=31000 mm²
Simply supported mid-span moment	Mm=-220 kNm
Plastic modulus Zpe	Zpe=5.6E6 mm³
Area Ao	Ao=234000 mm²
Depth of section	D=500 mm
Width of section	B=500 mm
Thickness of flange	t=16 mm
Summation Σ(B/t)	Bbyt=4*B/t=125
Torsional constant	J=4*Ao^2/Bbyt=1.7522E9 mm⁴

For uniform section
Slenderness parameter lamLT=2.25*eta*xi*SQR((Zpe*le)/(ry*SQR(A*J)))=0

Limiting moment of resistance

The proforma calculates the limiting moment of resistance MR in accordance with Clause 9.8.

Ratio le/lw	rat2=le/lw=1
Section is compact in accordance with Clause 9.3.7	
Moment of resistance of section	Mult=1900 kNm
Mpe as defined in Clause 9.7.1	Mpe=Mult=1900 kNm
Nominal yield stress comp.flange	syc=355 N/mm²
Nominal yield stress tens.flange	syt=355 N/mm²
Nominal yield stress of web	syw=355 N/mm²
Slenderness ratio lambdalt	lamb=lamLT=0
	n=0.008*lw/le*(beta-30)=-0.24
	MR=Mult=1900 kNm

Bending resistance

The proforma calculates the bending resistance of beams without longitudinal stiffeners in accordance with Clause 9.9.

Partial factor on yield strength	gm=1.05
Partial factor gammaf3	gf3=1.1
Bending resistance	MD=MR/(gm*gf3)=1645 kNm

Calculations for the bending resistance ignoring web contribution Mf from Clause 9.9.3.1.

Area of effective tension flange	Ate=8000 mm²
Partial factor on yield strength	gmt=1.05

Partial factor gammaf3 gf3=1.1
Area of effective compr. flange Ace=8000 mm²
Elastic modulus of the section Zxc=4.84E6 mm³
Limiting stress (comp. flange) syc=syc1=355 N/mm²
Partial factor on comp. strength gmc=1.05
Partial factor gammaf3 gf3=1.1
Force in compression flange Ffc=(Ace*syc)/(gmc*gf3*1E3)=2458.9 kN
Bending resistance is based on flange with lower value of force.
Bending resistance Mf=Fft*df/1E3=1190.1 kNm

Shear resistance of a web of a beam with transverse stiffeners at supports and with or without intermediate transverse stiffeners

The result is the shear capacity of a web panel under pure shear calculated using Clause 9.9.2 Shear Resistance.
Depth of web dwe=468 mm
Clear length of panel a=9000 mm
Web thickness tw=16 mm
Half eff.breadth of flanges bfe is the smallest of the following:
1. The result of the expression bfe1=10*tf*SQR(355/syf)=160 mm
2. The distance from the mid-plane of the web to the nearer edge of the flange bfe2=8 mm
3. Half the clear distance bfe3=234 mm

Non-dimensional value of plastic moment of resistance of flange:
mfw=(syf*bfe*tf*tf)/(2*syw*dwe*dwe*tw)=0.29221E-3

Shear resistance results from analysis

Shear resistance of web panel under pure shear.
Limiting shear stress (τl) 204.96 N/mm²
Resistance VD=(tw*(dw-hh)*taul1)/(gm*gf3*1000)
=1419.6 kN

Shear resistance of web panel under pure shear
ignoring flange capacity i.e. taking mfw=0.
Limiting shear stress (τl) 204.96 N/mm²
Resistance VR=(tw*(dw-hh)*taul2)/(gm*gf3*1000)
=1419.6 kN

Combined bending and shear in web sections

Web with transverse stiffeners at the supports only. Clause 9.9.3.2.
Shear force V=182.3 kN
Co-existent bending moment M=947.9 kNm

RESULTS FROM ANALYSIS

MD design capacity in bending VD design capacity in shear
Mf bending capacity ignoring web VR shear capacity ignoring flanges

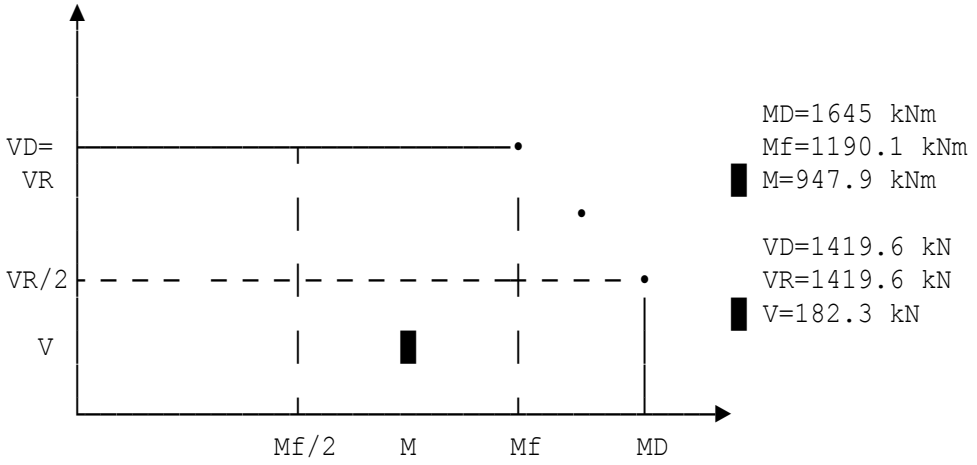

Interaction between shear and bending resistances

Maximum bending moment 947.9 kNm is within interaction curve.
Maximum shear force 182.3 kN is within interaction curve.
Interaction relationship satisfied.

Copyright 1986-2024 Fitzroy Systems Ltd.

Location: Ex3 - Solid rectangular section 100x100

The calculations are in accordance with BS 5400-3:2000" entitled " Code of Practice for Design of Steel Bridges " as implemented by Departmental Standard BD 13/06.

Slenderness lamLT

The proforma calculates the slenderness parameter lambdaLT in accordance with BS 5400-3:2000 Clause 9.7.
Solid rectangular sections (Clause 9.7.3.2).

Half wavelength of buckling	lw=2000 mm
Effective length to Clause 9.6	le=2000 mm
Depth D	D=100 mm
Width of section	B=100 mm
Simply supported mid-span moment	Mm=30 kNm
For uniform section	
Slenderness parameter	lamLT=2.8*eta*SQR(le*D)/B=8.4752

Limiting moment of resistance

The proforma calculates the limiting moment of resistance MR in accordance with Clause 9.8.

Ratio le/lw	rat2=le/lw=1
Section is compact in accordance with Clause 9.3.7	
Moment of resistance of section	Mult=78 kNm
Mpe as defined in Clause 9.7.1	Mpe=Mult=78 kNm
Nominal yield stress comp.flange	syc=315 N/mm²
Nominal yield stress of web	syw=315 N/mm²
Slenderness ratio lambdalt	lamb=lamLT=8.4752
	n=0.008*lw/le*(beta-30)=-0.17613
	MR=Mult=78 kNm

Bending resistance

The proforma calculates the bending resistance of beams without longitudinal stiffeners in accordance with Clause 9.9.

Partial factor on yield strength	gm=1.05
Partial factor gammaf3	gf3=1.1
Bending resistance	MD=MR/(gm*gf3)=67.532 kNm

Location: Ex4 - Other cases

The calculations are in accordance with BS 5400-3:2000" entitled " Code of Practice for Design of Steel Bridges " as implemented by Departmental Standard BD 13/06.

Slenderness lamLT

The proforma calculates the slenderness parameter lambdaLT in accordance with BS 5400-3:2000 Clause 9.7.
Other cases and alternative methods (Clause 9.7.5).

Half wavelength of buckling	lw=9000 mm
Effective length to Clause 9.6	le=9000 mm
Young's modulus of steel	E=210000 N/mm²
Plastic modulus	Zpe=5.6E6 mm³
Bending moment Mcr	Mcr=604E6 kNm
Slenderness parameter	lamLT=SQR(PI^2*E*Zpe/(Mcr*1E6)) =0.13862

Limiting moment of resistance

The proforma calculates the limiting moment of resistance MR in accordance with Clause 9.8.

Ratio le/lw	rat2=le/lw=1
Section is compact in accordance with Clause 9.3.7	
Moment of resistance of section	Mult=1900 kNm
Mpe as defined in Clause 9.7.1	Mpe=Mult=1900 kNm
Nominal yield stress comp.flange	syc=355 N/mm²
Nominal yield stress tens.flange	syt=355 N/mm²
Nominal yield stress of web	syw=355 N/mm²
Slenderness ratio lambdalt	lamb=lamLT=0.13862
	n=0.008*lw/le*(beta-30)=-0.23889
	MR=Mult=1900 kNm

Bending resistance

The proforma calculates the bending resistance of beams without longitudinal stiffeners in accordance with Clause 9.9.

Partial factor on yield strength	gm=1.05
Partial factor gammaf3	gf3=1.1
Bending resistance	MD=MR/(gm*gf3)=1645 kNm

Calculations for the bending resistance ignoring web contribution Mf from Clause 9.9.3.1.

Area of effective tension flange	Ate=8000 mm²
Partial factor on yield strength	gmt=1.05
Partial factor gammaf3	gf3=1.1
Area of effective compr. flange	Ace=8000 mm²
Elastic modulus of the section	Zxc=4.84E6 mm³
Limiting stress (comp. flange)	syc=syc1=355 N/mm²
Partial factor on comp. strength	gmc=1.05
Partial factor gammaf3	gf3=1.1
Force in compression flange	Ffc=(Ace*syc)/(gmc*gf3*1E3)=2458.9 kN
Distance between centroids	df=484 mm

Bending resistance is based on flange with lower value of force.

Bending resistance Mf=Fft*df/1E3=1190.1 kNm

Location: Ex5 - Assessment to Standard BD 56/10 (Equal flanges)

The calculations are in accordance with BS 5400-3:2000" entitled " Code of Practice for Design of Steel Bridges " as implemented by Departmental Standard BD 13/06.

Slenderness lamLT

The proforma calculates the slenderness parameter lambdaLT in accordance with BS 5400-3:2000 Clause 9.7.
I, Channel, Tee or Angle sections (Clause 9.7.2).

Half wavelength of buckling	lw=15000 mm
Effective length to Clause 9.6	le=15000 mm
2nd moment of area @ minor axis	Iyy=156E6 mm⁴
Cross sectional area	A=36800 mm²
Factor k4	k4=0.9
Overall depth of section	D=926.6 mm
Mean flange thickness	tf=32 mm
For a uniform section	
Slenderness parameter	lamLT=(le/ry)*k4*eta*v=207.35

Limiting moment of resistance

The proforma calculates the limiting moment of resistance MR in accordance with Clause 9.8.

Ratio le/lw	rat2=le/lw=1
Section is non-compact.	
Mult for non-compact section	Mult=4340 kNm
Mpe as defined in Clause 9.7.1	Mpe=4000 kNm
Nominal yield stress comp.flange	syc=355 N/mm²
Nominal yield stress tens.flange	syt=355 N/mm²
Nominal yield stress of web	syw=355 N/mm²
Slenderness ratio lambdalt	lamb=lamLT=207.35
	n=0.008*lw/le*(beta-30)=1.4878

MR=((1+(1+n)*5700/beta^2)-SQR((1+(1+n)*5700/beta^2)^2-22800/beta^2))
=0.20326

Limiting moment of resistance	MR=MR*Mult*0.5=441.07 kNm

Bending resistance

The proforma calculates the bending resistance of beams without longitudinal stiffeners in accordance with Clause 9.9.

Partial factor on yield strength	gm=1.05
Partial factor gammaf3	gf3=1.1
Bending resistance	MD=MR/(gm*gf3)=381.88 kNm

Calculations for the bending resistance ignoring web contribution Mf from Clause 9.9.3.1.

Area of effective tension flange	Ate=9824 mm²
Partial factor on yield strength	gmt=1.05
Partial factor gammaf3	gf3=1.1
Area of effective compr. flange	Ace=9824 mm²
Elastic modulus of the section	Zxc=10.9E6 mm³

Limiting stress (comp. flange) syc=syc2=40.465 N/mm²
Partial factor on comp. strength gmc=1.05
Partial factor gammaf3 gf3=1.1
Force in compression flange Ffc=(Ace*syc)/(gmc*gf3*1E3)=344.18 kN
Bending resistance is based on flange with lower value of force.
Bending resistance Mf=Ffc*df/1E3=307.9 kNm

Shear resistance of a web of a beam with transverse stiffeners at supports and with or without intermediate transverse stiffeners

The assessment calculations are in accordance with Standard BD 56/10 entitled " The Assessment of Steel Highway Bridges and Structures ". The result is the shear capacity of a web panel under pure shear calculated using Clause 9.9.2 Shear Resistance.
Depth of web dwe=824 mm
Clear length of panel a=15000 mm
Web thickness tw=19.5 mm
Half eff.breadth of flanges bfe is the smaller of the following:
1. The result of the expression bfe1=10*tf*SQR(355/syf)=320 mm
2. The distance from the mid-plane of the web to the nearer edge of the flange bfe2=153 mm

Non-dimensional value of plastic moment of resistance of flange:
mfw=(syf*bfe*tf*tf)/(2*syw*dwe*dwe*tw)=0.0059166

Shear resistance results from analysis

Shear resistance of web panel under pure shear.
Limiting shear stress (τl) 204.96 N/mm²
Resistance VD=(tw*(dw-hh)*taul1)/(gm*gf3*1000)
=2984.9 kN

Shear resistance of web panel under pure shear
ignoring flange capacity i.e. taking mfw=0.
Limiting shear stress (τl) 204.96 N/mm²
Resistance VR=(tw*(dw-hh)*taul2)/(gm*gf3*1000)
=2984.9 kN

Combined bending and shear in web sections

Web with transverse stiffeners at the supports only. Clause 9.9.3.2.
Shear force V=2100 kN
Co-existent bending moment M=2300 kNm

RESULTS FROM ANALYSIS

MD design capacity in bending VD design capacity in shear
Mf bending capacity ignoring web VR shear capacity ignoring flanges

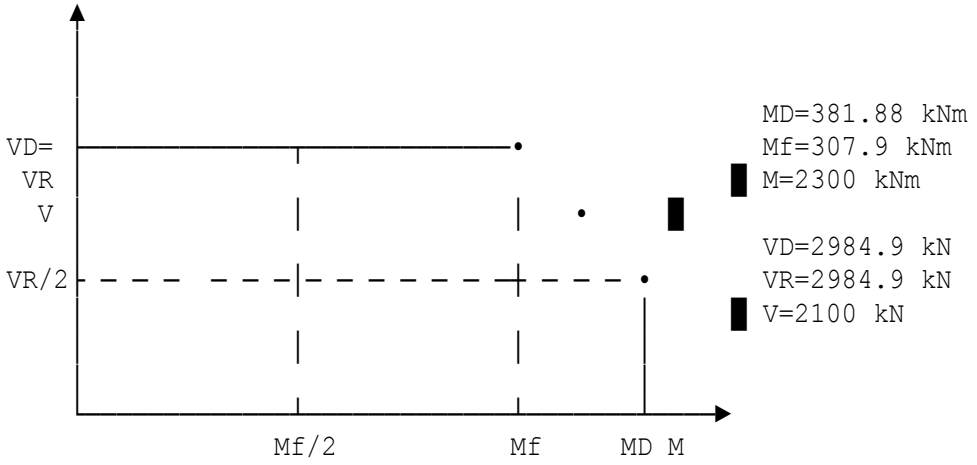

Interaction between shear and bending resistances

Maximum bending moment 2300 kNm is outside interaction curve.
Maximum shear force 2100 kN is within interaction curve.
Interaction relationship exceeded.

Location: Ex6 - Assessment to Standard BD 56/10) (Unequal flanges)

The calculations are in accordance with BS 5400-3:2000" entitled " Code of Practice for Design of Steel Bridges " as implemented by Departmental Standard BD 13/06.

Slenderness lamLT

The proforma calculates the slenderness parameter lambdaLT in accordance with BS 5400-3:2000 Clause 9.7.
I, Channel, Tee or Angle sections (Clause 9.7.2).

Half wavelength of buckling	lw=15000 mm
Effective length to Clause 9.6	le=15000 mm
2nd moment of area @ minor axis	Iyy=156E6 mm⁴
Cross sectional area	A=36800 mm²
Factor k4	k4=0.9
Overall depth of section	D=926.6 mm
Mean flange thickness	tf=27.5 mm
For a uniform section	
Slenderness parameter	lamLT=(le/ry)*k4*eta*v=207.35

Limiting moment of resistance

The proforma calculates the limiting moment of resistance MR in accordance with Clause 9.8.

Ratio le/lw	rat2=le/lw=1
Section is non-compact.	
Mult for non-compact section	Mult=4340 kNm
Mpe as defined in Clause 9.7.1	Mpe=4000 kNm
Nominal yield stress comp.flange	syc=355 N/mm²
Nominal yield stress tens.flange	syt=355 N/mm²
Nominal yield stress of web	syw=355 N/mm²
Slenderness ratio lambdalt	lamb=lamLT=207.35
	n=0.008*lw/le*(beta-30)=1.4878

MR=((1+(1+n)*5700/beta^2)-SQR((1+(1+n)*5700/beta^2)^2-22800/beta^2))
=0.20326

Limiting moment of resistance	MR=MR*Mult*0.5=441.07 kNm

Bending resistance

The proforma calculates the bending resistance of beams without longitudinal stiffeners in accordance with Clause 9.9.

Partial factor on yield strength	gm=1.05
Partial factor gammaf3	gf3=1.1
Bending resistance	MD=MR/(gm*gf3)=381.88 kNm

Calculations for the bending resistance ignoring web contribution Mf from Clause 9.9.3.1.

Area of effective tension flange	Ate=9824 mm²
Partial factor on yield strength	gmt=1.05
Partial factor gammaf3	gf3=1.1
Area of effective compr. flange	Ace=9824 mm²
Elastic modulus of the section	Zxc=10.9E6 mm³

Limiting stress (comp. flange) syc=syc2=40.465 N/mm²
Partial factor on comp. strength gmc=1.05
Partial factor gammaf3 gf3=1.1
Force in compression flange Ffc=(Ace*syc)/(gmc*gf3*1E3)=344.18 kN
Bending resistance is based on flange with lower value of force.
Bending resistance Mf=Ffc*df/1E3=309.45 kNm

Shear resistance of a web of a beam with transverse stiffeners at supports and with or without intermediate transverse stiffeners

The assessment calculations are in accordance with Standard BD 56/10 entitled " The Assessment of Steel Highway Bridges and Structures ". The result is the shear capacity of a web panel under pure shear calculated using Clause 9.9.2 Shear Resistance.
Depth of web dwe=400 mm
Clear length of panel a=15000 mm
Web thickness tw=19.5 mm
Thickness of flange plates tft=25 mm
Nominal yield stress comp.flange syf1=syc=40.465 N/mm²
Half eff.breadth of flange bfet is the smaller of the following:
1. The result of the expression bfet1=10*tft*SQR(355/syf1)=740.48 mm
2. The distance from the mid-plane of the web to the nearer edge of the flange bfet2=153 mm
Non-dimensional value plastic moment of resistance of top flange:
mfwt=(syf1*bfet*tft*tft)/(2*syw*dwe*dwe*tw)=0.0017468
Thickness of plate tfb=30 mm
Nominal yield stress bottom flange syf2=syt=355 N/mm²
Half eff.breadth of flange bfeb is the smaller of the following:
1. The result of the expression bfeb1=10*tfb*SQR(355/2)=3996.9 mm
2. The distance from the mid-plane of the web to the nearer edge of the flange bfeb2=153 mm
Non-dimensional value of plastic moment of resistance of bottom flange.
Value mfwb mfwb=(syf2*bfeb*tfb*tfb)/(2*syw*dwe *dwe*tw) =0.022067

Shear resistance results from analysis

Shear resistance of web panel under pure shear.
Limiting shear stress (τl) 204.96 N/mm²
Resistance VD=(tw*(dw-hh)*taul1)/(gm*gf3*1000) =3016 kN

Shear resistance of web panel under pure shear ignoring flange capacity i.e. taking mfw=0.
Limiting shear stress (τl) 204.96 N/mm²
Resistance VR=(tw*(dw-hh)*taul2)/(gm*gf3*1000) =3016 kN

Combined bending and shear in web sections

Web with transverse stiffeners at the supports only. Clause 9.9.3.2.
Shear force V=2100 kN
Co-existent bending moment M=2300 kNm

RESULTS FROM ANALYSIS

MD design capacity in bending VD design capacity in shear
Mf bending capacity ignoring web VR shear capacity ignoring flanges

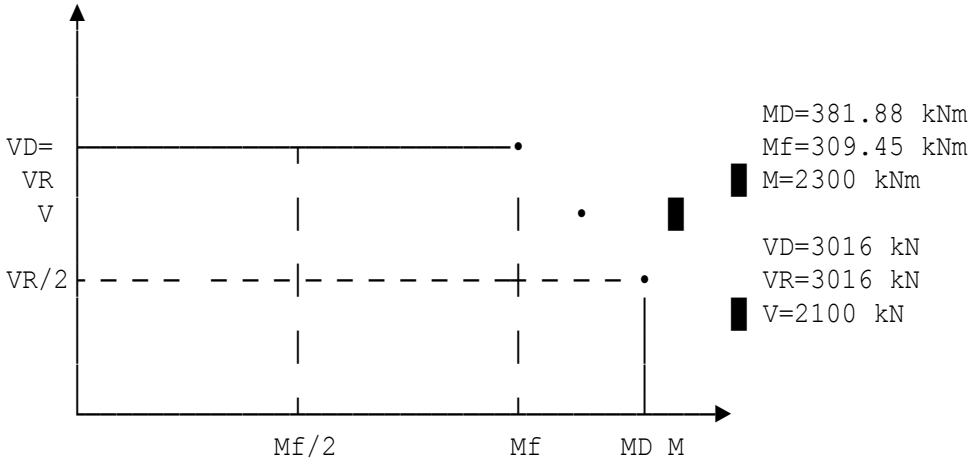

Interaction between shear and bending resistances

Maximum bending moment 2300 kNm is outside interaction curve.
Maximum shear force 2100 kN is within interaction curve.
Interaction relationship exceeded.

Location: Ex7 - Slenderness, moment and shear resistance

The calculations are in accordance with BS 5400-3:2000" entitled " Code of Practice for Design of Steel Bridges " as implemented by Departmental Standard BD 13/06.

Slenderness lamLT

The proforma calculates the slenderness parameter lambdaLT in accordance with BS 5400-3:2000 Clause 9.7.
I, Channel, Tee or Angle sections (Clause 9.7.2).

Half wavelength of buckling	lw=10400 mm
Effective length to Clause 9.6	le=10400 mm
2nd moment of area @ minor axis	Iyy=133E6 mm⁴
Cross sectional area	A=32300 mm²
Factor k4	k4=0.9
Overall depth of section	D=918.5 mm
Mean flange thickness	tf=27.9 mm
For a uniform section	
Slenderness parameter	lamLT=(le/ry)*k4*eta*v=145.87

Limiting moment of resistance

The proforma calculates the limiting moment of resistance MR in accordance with Clause 9.8.

Ratio le/lw	rat2=le/lw=1
Section is compact in accordance with Clause 9.3.7	
Moment of resistance of section	Mult=3770 kNm
Mpe as defined in Clause 9.7.1	Mpe=Mult=3770 kNm
Nominal yield stress comp.flange	syc=345 N/mm²
Nominal yield stress tens.flange	syt=345 N/mm²
Nominal yield stress of web	syw=345 N/mm²
Slenderness ratio lambdalt	lamb=lamLT=145.87
	n=0.008*lw/le*(beta-30)=0.91037

MR=((1+(1+n)*5700/beta^2)-SQR((1+(1+n)*5700/beta^2)^2-22800/beta^2))
=0.41851

Limiting moment of resistance	MR=MR*Mult*0.5=788.89 kNm

Bending resistance

The proforma calculates the bending resistance of beams without longitudinal stiffeners in accordance with Clause 9.9.

Partial factor on yield strength	gm=1.05
Partial factor gammaf3	gf3=1.1
Bending resistance	MD=MR/(gm*gf3)=683.02 kNm

Shear resistance of a web of a beam with transverse stiffeners at supports and with or without intermediate transverse stiffeners

The result is the shear capacity of a web panel under pure shear calculated using Clause 9.9.2 Shear Resistance.

Depth of web dwe=862 mm
Clear length of panel a=10400 mm
Web thickness tw=18 mm
Half eff.breadth of flanges bfe is the smaller of the following:
1. The result of the expression bfe1=10*tf*SQR(355/syf)=283.01 mm
2. The distance from the mid-plane of the web to the nearer edge of the flange bfe2=152 mm

Non-dimensional value of plastic moment of resistance of flange:
mfw=(syf*bfe*tf*tf)/(2*syw*dwe*dwe*tw)=0.0044232

Shear resistance results from analysis

Shear resistance of web panel under pure shear.
Limiting shear stress (τl) 199.19 N/mm²
Resistance VD=(tw*(dw-hh)*taul1)/(gm*gf3*1000)
=2851.2 kN

Shear resistance of web panel under pure shear
ignoring flange capacity i.e. taking mfw=0.
Limiting shear stress (τl) 199.19 N/mm²
Resistance VR=(tw*(dw-hh)*taul2)/(gm*gf3*1000)
=2851.2 kN

Combined bending and shear in web sections

Web with transverse stiffeners at the supports only. Clause 9.9.3.2.
Shear force V=182 kN
Co-existent bending moment M=947 kNm

RESULTS FROM ANALYSIS

MD design capacity in bending VD design capacity in shear
Mf bending capacity ignoring web VR shear capacity ignoring flanges

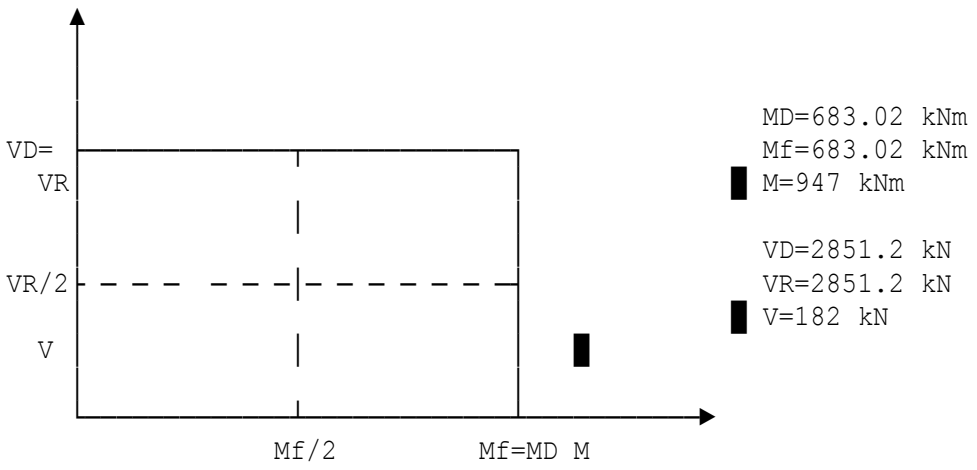

Interaction between shear and bending resistances

Maximum bending moment 947 kNm is outside interaction curve.
Maximum shear force 182 kN is within interaction curve.
Interaction relationship exceeded.

Location: Ex1 - Welded I section

Evaluation of non-dimensional slenderness

The proforma is in accordance with BS EN 1993-2:2006 "Eurocode 3 Design of Steel Structures - Part 2 : Steel bridges" and the NA to to BS EN 1993-2:2006.

The proforma calculates the non-dimensional slenderness parameter lamLT (λLT) and utilises Appendix C of SCI publication P356 or Clause 6.3.2.2 of BS EN 1993-2:2006.

Compression flange classification will be taken as Class 3.
The web classification will be taken as Class 3.
The overall section classification is Class 3.

Geometrical parameters

Half wavelength of buckling	Lw=28000 mm
Eff.length between restraints	LT=8200 mm
Depth of section	h=1100 mm
Flange width	b=500 mm
Flange thickness	tf=40 mm
Web thickness	tw=10 mm
Distance between flange centroids	df=1060 mm

Design parameters

Coefficient C1	C1=1
Young's modulus	E=210000 N/mm²
Shear modulus	G=80768 N/mm²
Yield strength	fy=345 N/mm²

Expression for lamLT (λLT)

The clause references in this section are as per Appendix C of SCI P356.
The following are the 2nd moments of area of the compression and tension flanges, respectively, about the z-z axes:
For buckling over a half wavelength Lw the parameter V is as given by the expression below:

V=((4*a*(1-a)+0.05*lamF^2+psia^2)^0.5+psia)^-0.5=0.70179

Parameter from C.4.5 Veq=V=0.70179

The restraint parameter is calculated from the following expression as given in SCI publication P356:

$$rp = \left[\frac{Veq^4 * Lw^3}{E * Izc * \theta R * df^2 * (1-a)} \right]$$

Rotation of restraint θR thetaR=27.06E-12 rad/Nmm

Restraint parameter:

rp=Veq^4*Lw^3/(E*Izc*thetaR*df^2*(1-a))=4003.1 rad/Nmm

Longest unbraced length Lr=LT=8200 mm

Plastic section modulus (yy axis) Wply=23.88E6 mm³

Elastic section modulus (yy axis) Wely=22.87E6 mm³
Beta βw betaw=Wely/Wply=0.95771
Section property from C.1 U=1
Non-dimensional slenderness λLT:

lamLT=1/(C1)^0.5*U*V*D*lamb*SQR(betaw)=0.90719

Partial factors on strength

Partial factor γM0 gamM0=1.0
Partial factor γM1 gamM1=1.1

Lateral torsional buckling

The the design lateral torsional buckling resistance moment (MbRd) will be calculated. Section under consideration is a welded section and EC3 Part 1-1 Clause 6.3.2.2 expressions will be adopted.
Limiting slenderness value lamLT0=0.2
According to the NA to BS EN 1993-1-1, for welded doubly symmetrical sections the imperfection value is as follows:
Imperfection value aLT=0.76 (curve d)
Modified chiLT factor ChiLT=chiLT/f=0.51675
Design buckling resistance moment MbRd=ChiLT*Wely*fy/(gamM1*10^6)
=3706.6 kNm

Interaction equation for moments

The beam is assumed to be without longitudinal stiffeners. The design resistance for bending about the major axis as per Clause 6.2.5(2) of BS EN 1993-2:2006 is as follows:
Design moment resistance McRd=Wely*fy/(gamM0*10^6)=7890.2 kNm
As MbRd ≤ McRd (3706.6 kNm ≤ 7890.2 kNm), the lateral torsional buckling resistance will be adopted.
Design moment from analysis MEd=3132 kNm
Unity factor unity=MEd/MbRd=0.84499
As MEd ≤ MbRd (3132 kNm ≤ 3706.6 kNm), section chosen is considered to be suitable.

Shear resistance of a web of a beam with transverse stiffeners at supports and with or without intermediate transverse stiffeners

The shear resistance of a web under pure shear will be evaluated. Beam will be stable against shear buckling due to the presence of closely spaced web transverse stiffeners.

Shear-moment interaction

Design shear force (coexisting) VEd=500 kN
The value of parameter eta (η) is as per the NA to BS EN 1993-1-5.
Value of η from Clause 5.1(2) eta=1
Plastic shear resistance VplRd=eta*Aw*fy/(gamM0*SQR(3))/1000
=2031.7 kN
As VEd ≤ 0.5*VplRd, the design shear will not reduce the design resistance moment. Hence OK.

DESIGN SUMMARY	**Design moment**	**3132 kNm**
	Design shear	**500 kN**
	Yield strength of steel	**345 N/mm²**
	Depth of beam	**1100 mm**
	Flange width	**500 mm**
	Classification	**Class 3**
	Design buckling resistance	**3706.6 kNm**
	Plastic shear resistance	**2031.7 kN**
	Unity factor	**0.84499 ≤ 1**

Location: Ex2 - As Ex1 but with symmetry about both axes

Evaluation of non-dimensional slenderness

The proforma is in accordance with BS EN 1993-2:2006 "Eurocode 3 Design of Steel Structures - Part 2 : Steel bridges" and the NA to to BS EN 1993-2:2006.

The proforma calculates the non-dimensional slenderness parameter lamLT (λLT) and utilises Appendix C of SCI publication P356 or Clause 6.3.2.2 of BS EN 1993-2:2006.

Compression flange classification will be taken as Class 3.
The web classification will be taken as Class 3.
The overall section classification is Class 3.

Geometrical parameters

Half wavelength of buckling	Lw=28000 mm
Eff.length between restraints	LT=8200 mm
Depth of section	h=1100 mm
Flange width	b=500 mm
Flange thickness	tf=40 mm
Web thickness	tw=10 mm
Distance between flange centroids	df=1060 mm

Design parameters

Coefficient C1	C1=1
Young's modulus	E=210000 N/mm²
Shear modulus	G=80768 N/mm²
Yield strength	fy=345 N/mm²

Expression for lamLT (λLT)

The clause references in this section are as per Appendix C of SCI P356.
The following are the 2nd moments of area of the compression and tension flanges, respectively, about the z-z axes:
For buckling over a half wavelength Lw the parameter V is as given by the expression below:

V=((4*a*(1-a)+0.05*lamF^2+psia^2)^0.5+psia)^-0.5=0.70179

Parameter from C.4.5 Veq=V=0.70179

The restraint parameter is calculated from the following expression as given in SCI publication P356:

$$rp = \left[\frac{Veq^4 * Lw^3}{E * Izc * \theta R * df^2 * (1-a)} \right]$$

Rotation of restraint θR thetaR=27.06E-12 rad/Nmm

Restraint parameter:

rp=Veq^4*Lw^3/(E*Izc*thetaR*df^2*(1-a))=4003.1 rad/Nmm

Longest unbraced length Lr=LT=8200 mm

Plastic section modulus (yy axis) Wply=23.88E6 mm³

Elastic section modulus (yy axis) Wely=22.87E6 mm³
Beta βw betaw=Wely/Wply=0.95771
Section property from C.1 U=1
Non-dimensional slenderness λLT:

lamLT=1/(C1)^0.5*U*V*D*lamb*SQR(betaw)=0.90719

Partial factors on strength

Partial factor γM0 gamM0=1.0
Partial factor γM1 gamM1=1.1

Lateral torsional buckling

The the design lateral torsional buckling resistance moment (MbRd) will be calculated. Section under consideration is a welded section and EC3 Part 1-1 Clause 6.3.2.2 expressions will be adopted.
Limiting slenderness value lamLT0=0.2
According to the NA to BS EN 1993-1-1, for welded doubly symmetrical sections the imperfection value is as follows:
Imperfection value aLT=0.76 (curve d)
Modified chiLT factor ChiLT=chiLT/f=0.51675
Design buckling resistance moment MbRd=ChiLT*Wely*fy/(gamM1*10^6)
=3706.6 kNm

Interaction equation for moments

The beam is assumed to be without longitudinal stiffeners. The design resistance for bending about the major axis as per Clause 6.2.5(2) of BS EN 1993-2:2006 is as follows:
Design moment resistance McRd=Wely*fy/(gamM0*10^6)=7890.2 kNm
As MbRd ≤ McRd (3706.6 kNm ≤ 7890.2 kNm), the lateral torsional buckling resistance will be adopted.
Design moment from analysis MEd=3132 kNm
Unity factor unity=MEd/MbRd=0.84499
As MEd ≤ MbRd (3132 kNm ≤ 3706.6 kNm), section chosen is considered to be suitable.

Shear resistance of a web of a beam with transverse stiffeners at supports and with or without intermediate transverse stiffeners

The shear resistance of a web under pure shear will be evaluated. Beam will be stable against shear buckling due to the presence of closely spaced web transverse stiffeners.

Shear-moment interaction

Design shear force (coexisting) VEd=500 kN
The value of parameter eta (η) is as per the NA to BS EN 1993-1-5.
Value of η from Clause 5.1(2) eta=1
Plastic shear resistance VplRd=eta*Aw*fy/(gamM0*SQR(3))/1000
=2031.7 kN
As VEd ≤ 0.5*VplRd, the design shear will not reduce the design resistance moment. Hence OK.

DESIGN SUMMARY	**Design moment**	**3132 kNm**
	Design shear	**500 kN**
	Yield strength of steel	**345 N/mm²**
	Depth of beam	**1100 mm**
	Flange width	**500 mm**
	Classification	**Class 3**
	Design buckling resistance	**3706.6 kNm**
	Plastic shear resistance	**2031.7 kN**
	Unity factor	**0.84499 ≤ 1**

Location: Ex3 - Beam 500x300x20 RHS (Hot Rolled section)

Evaluation of non-dimensional slenderness

The proforma is in accordance with BS EN 1993-2:2006 "Eurocode 3 Design of Steel Structures - Part 2 : Steel bridges" and the NA to to BS EN 1993-2:2006.

The proforma calculates the non-dimensional slenderness parameter lamLT (λLT) and utilises Clause 6.3.2.2 of BS EN 1993-2:2006.

Expression for lamLT (λLT)

The non-dimensional slenderness lamLT (λLT) could be derived from the following expression:

$$\lambda LT = \left[\frac{fy.Wy}{Mcr} \right]$$

where,

Mcr = Elastic critical buckling moment from the analysis
fy = Yield strength
Wy = Plastic modulus of the section about y-y axis

Compression flange classification will be taken as Class 2.
The web classification will be taken as Class 2.
The overall section classification is Class 2.

Geometrical parameters

Eff.length between restraints	LT=6833.3 mm
Depth of section	h=500 mm
Flange width	b=300 mm
Flange thickness	tf=20 mm
Plastic section modulus (yy axis)	Wply=4.89E6 mm³

Design parameters

Young's modulus	E=210000 N/mm²
Shear modulus	G=81000 N/mm²
Yield strength	fy=345 N/mm²

Non-dimensional slenderness (λLT)

Effective length parameter	K=1
Length for LTB	LT=LT/1000=8.2 m
Critical moment	Mcr=C1*Et*Gt^0.5/10^6=32465 kNm
Non-dimensional slenderness	lamLT=(Wply*fy/(Mcr*10^6))^0.5=0.22796

Partial factors on strength

Partial factor γM0 gamM0=1.0
Partial factor γM1 gamM1=1.1

Lateral torsional buckling

The the design lateral torsional buckling resistance moment (MbRd) will be calculated. Section under consideration is a Hot Rolled section and EC3 Part 1-1 Clause 6.3.2.3 expressions will be adopted.
Limiting slenderness value lamLT0=0.4
As lamLT ≤ lamLT0, the segment of the beam is not subject to lateral torsional buckling.
The design buckling resistance MbRd will therefore be the same as the design resistance for bending McRd.
Design buckling resistance moment MbRd=Wply*fy/(gamM0*10^6)=1687.1 kNm
Design moment resistance McRd=MbRd=1687.1 kNm

Interaction equation for moments

The beam is assumed to be without longitudinal stiffeners. The design resistance for bending about the major axis as per Clause 6.2.5(2) of BS EN 1993-2:2006 is as follows:
Design moment resistance McRd=Wply*fy/(gamM0*10^6)=1687.1 kNm
As MbRd ≤ McRd (1687.1 kNm ≤ 1687.1 kNm), the lateral torsional buckling resistance will be adopted.
Design moment from analysis MEd=1600 kNm
Unity factor unity=MEd/MbRd=0.9484
As MEd ≤ MbRd (1600 kNm ≤ 1687.1 kNm), section chosen is considered to be suitable.

Shear resistance of a web of a beam with transverse stiffeners at supports and with or without intermediate transverse stiffeners

The shear resistance of a web under pure shear will be evaluated.
As hw/tw ≤ 72ε/η (23 ≤ 59.423), the beam is considered to be stable against shear buckling.

Shear-moment interaction

Design shear force (coexisting) VEd=500 kN
The value of parameter eta (η) is as per the NA to BS EN 1993-1-5.
Value of η from Clause 5.1(2) eta=1
Plastic shear resistance VplRd=eta*Aw*fy/(gamM0*SQR(3))/1000
=3784.5 kN
As VEd ≤ 0.5*VplRd, the design shear will not reduce the design resistance moment. Hence OK.

DESIGN SUMMARY	**Design moment**	**1600 kNm**
	Design shear	**500 kN**
	Yield strength of steel	**345 N/mm²**
	Depth of beam	**500 mm**
	Flange width	**300 mm**
	Classification	**Class 2**
	Design buckling resistance	**1687.1 kNm**
	Plastic shear resistance	**3784.5 kN**
	Unity factor	**0.9484 ≤ 1**

Location: Ex4 - Hot Rolled 305x305x119 Tee section

Evaluation of non-dimensional slenderness

The proforma is in accordance with BS EN 1993-2:2006 "Eurocode 3 Design of Steel Structures - Part 2 : Steel bridges" and the NA to to BS EN 1993-2:2006.

The proforma calculates the non-dimensional slenderness parameter lamLT (λLT) from an elastic buckling analysis of the structure.

Expression for lamLT (λLT)

The non-dimensional slenderness lamLT (λLT) could be derived from the following expression:

$$\lambda LT = \left[\frac{fy.Wy}{Mcr} \right]$$

where,

Mcr = Elastic critical buckling moment from the analysis
fy = Yield strength
Wy = Plastic modulus of the section about y-y axis

Geometrical and design parameters

Section is not symmetrical about either axis (Tee section).
Section under consideration is a Hot Rolled section.

Eff.length between restraints	LT=5000 mm
Depth of section	h=317.9 mm
Width of section	b=311.4 mm
Plate thickness	tf=31.4 mm
Web thickness	tw=18.4 mm
Yield strength	fy=345 N/mm²
Section classification	class=2

The overall section classification will be taken as Class 2.

Plastic section modulus (yy axis)	Wply=894000 mm³
Bending moment Mcr	Mcr=2180 kNm
Non-dimensional slenderness λLT	lamLT=SQR(fy*Wply/(Mcr*1E6))=0.37614

Partial factors on strength

Partial factor γM0	gamM0=1.0
Partial factor γM1	gamM1=1.1

Lateral torsional buckling

The the design lateral torsional buckling resistance moment (MbRd) will be calculated. Section under consideration is a Hot Rolled section and EC3 Part 1-1 Clause 6.3.2.3 expressions will be adopted.

Limiting slenderness value lamLT0=0.4

As lamLT ≤ lamLT0, the segment of the beam is not subject to lateral torsional buckling.

The design buckling resistance MbRd will therefore be the same as the design resistance for bending McRd.
Design buckling resistance moment MbRd=Wply*fy/(gamM0*10^6)=308.43 kNm
Design moment resistance McRd=MbRd=308.43 kNm

Interaction equation for moments

The beam is assumed to be without longitudinal stiffeners. The design resistance for bending about the major axis as per Clause 6.2.5(2) of BS EN 1993-2:2006 is as follows:
Design moment resistance McRd=Wply*fy/(gamM0*10^6)=308.43 kNm
As MbRd ≤ McRd (308.43 kNm ≤ 308.43 kNm), the lateral torsional buckling resistance will be adopted.
Design moment from analysis MEd=275 kNm
Unity factor unity=MEd/MbRd=0.89161
As MEd ≤ MbRd (275 kNm ≤ 308.43 kNm), section chosen is considered to be suitable.

Shear resistance of a web of a beam with transverse stiffeners at supports and with or without intermediate transverse stiffeners

The shear resistance of a web under pure shear will be evaluated.
As hw/tw ≤ 72ε/η (15.571 ≤ 59.423), the beam is considered to be stable against shear buckling.

Shear-moment interaction

Design shear force (coexisting) VEd=600 kN
The value of parameter eta (η) is as per the NA to BS EN 1993-1-5.
Value of η from Clause 5.1(2) eta=1
Plastic shear resistance VplRd=eta*Aw*fy/(gamM0*SQR(3))/1000
=1050 kN
Plastic moment resistance MyvRd=300 kNm
Design moment resistance McRd=308.43 kNm
Hence the moment resistance of the section reduces from 308.43 kNm to 300 kNm with coexistent shear of 600 kN.
As MEd ≤ MyvRd (275 kNm ≤ 300 kNm), the design moment is less than the design moment resistance. Hence OK.

Provide web transverse stiffeners at supports.

DESIGN SUMMARY	**Design moment**	**275 kNm**
	Design shear	**600 kN**
	Yield strength of steel	**345 N/mm²**
	Depth of beam	**317.9 mm**
	Width of section	**311.4 mm**
	Classification	**Class 2**
	Design buckling resistance	**308.43 kNm**
	Plastic shear resistance	**1050 kN**
	Unity factor	**0.89161 ≤ 1**

Location: Ex5 - Composite section (SCI/P357 Sect. 9.1) welded sect.

Evaluation of non-dimensional slenderness

The proforma is in accordance with BS EN 1993-2:2006 "Eurocode 3 Design of Steel Structures - Part 2 : Steel bridges" and the NA to to BS EN 1993-2:2006.

The proforma calculates the non-dimensional slenderness parameter lamLT (λLT) using the simplified method of EN 1993-2, as allowed by BS EN 1994-2:2005.

Expression for lamLT (λLT) - composite construction

The section under consideration is assumed to be at an internal support of a continues girder where hogging bending moment with axial force are present. The non-dimensional slenderness lamLT (λLT) could be derived from the following expression as per Clause 6.3.4.2(4):

$$\lambda LT = \left[\frac{fy.Aeff}{Ncrit} \right]$$

where,

Ncrit = Elastic critical load
fy = Yield strength
Aeff = Effective area of the chord

Geometrical and design parameters

Compression flange classification will be taken as Class 3.
Section symmetrical only about the minor axis (unequal flanges).

Eff.length between restraints	LT=5900 mm
Depth of section	h=1100 mm
Top flange width	bt=500 mm
Bottom flange width	bb=600 mm
Top flange thickness	tft=40 mm
Bottom flange thickness	tfb=60 mm
Web thickness	tw=14 mm
Yield strength	fy=335 N/mm²
Total design moment	M1=11950 kNm
Total shear	V1=1528 kNm
Design moment at brace position	M2=4000 kNm
Design shear at brace position	V2=1080 kNm
Non-dimensional slenderness λLT	lamLT=SQR(fy*Aeff/(Ncrit*1E3))=0.3635

Partial factors on strength

Partial factor γM0	gamM0=1.0
Partial factor γM1	gamM1=1.1

Lateral torsional buckling

The the design lateral torsional buckling resistance moment (MbRd) will be calculated. Section under consideration is a welded section and EC3 Part 1-1 Clause 6.3.2.2 expressions will be adopted.

Limiting slenderness value	lamLT0=0.2

According to the NA to BS EN 1993-1-1, Tables 6.3 and 6.4 could be used with Clause 6.3.2.2 to determine the imperfection factor αLT.

Imperfection value	aLT=0.76 (curve d)
Modified chiLT factor	ChiLT=chiLT/f=0.87678
Design moment on steel section	MaEd=2573 kNm
Composite cracked section moment	McEd=Mmax-MaEd=9377 kNm
Design yield strength of steel	fyd=fy/gamM1=304.55 N/mm²
Construction stage:	
Stress in steel bottom flange	ssbf1=67 N/mm²
Composite stage:	
Stress in steel bottom flange	ssbf2=205 N/mm²
Factor k (EN 1994-2 Cl. 6.2.1.4)	k=(fyd-ssbf1)/ssbf2=1.1588
Design elastic resistance moment	MelRd=MaEd+k*McEd=13439 kNm
Modification factor	ChiLT=0.87678
Design buckling resistance moment	MbRd=ChiLT*MelRd=11783 kNm

Interaction equation for moments

Distance	L1=0.25*L/SQR(m)=1197.6 mm
Design moment from analysis	MEd=M1-(M1-M2)*L1/L=10336 kNm
Axial stress from the analysis	stress=5 N/mm²
Axial load	NEd=Aeff*stress/1000=192.37 kN
Axial resistance of Tee section	NbRd=ChiLT*Aeff*fyd/1000=10273 kN
Unity factor	unity=MEd/MbRd+NEd/NbRd=0.89597

As unity ≤ 1, section chosen is considered to be suitable.

Shear resistance of a web of a beam with transverse stiffeners at supports and with or without intermediate transverse stiffeners

The shear resistance of a web under pure shear will be evaluated. Beam will be stable against shear buckling due to the presence of closely spaced web transverse stiffeners.

Shear-moment interaction

Design shear force (coexisting)	VEd=600 kN

The value of parameter eta (η) is as per the NA to BS EN 1993-1-5.

Value of η from Clause 5.1(2)	eta=1
Plastic shear resistance	VplRd=eta*Aw*fy/(gamM0*SQR(3))/1000 =2707.8 kN

As VEd ≤ 0.5*VplRd, the design shear will not reduce the design resistance moment. Hence OK.

DESIGN SUMMARY	**Design moment**	**10336 kNm**
	Design shear	**600 kN**
	Yield strength of steel	**335 N/mm²**
	Depth of beam	**1100 mm**
	Classification	**Class 3**
	Design buckling resistance	**11783 kNm**
	Plastic shear resistance	**2707.8 kN**
	Unity factor	**0.89597 ≤ 1**

Location: Ex6 - 430x100 Channel, simplified expression (Hot Rolled)

Evaluation of non-dimensional slenderness

The proforma is in accordance with BS EN 1993-2:2006 "Eurocode 3 Design of Steel Structures - Part 2 : Steel bridges" and the NA to to BS EN 1993-2:2006.

The proforma calculates the non-dimensional slenderness parameter lamLT (λLT) and utilises Appendix C of SCI publication P356 or Clause 6.3.2.2 of BS EN 1993-2:2006.

Compression flange classification will be taken as Class 1.
The web classification will be taken as Class 1.
The overall section classification is Class 1.

Geometrical parameters

Half wavelength of buckling	Lw=8000 mm
Eff.length between restraints	LT=4000 mm
Depth of section	h=430 mm
Flange width	b=100 mm
Flange thickness	tf=19 mm
Web thickness	tw=11 mm
Second moment of area (z-z axis)	Iz=7.22E6 mm⁴
St.Venant torsional constant	It=630000 mm⁴
Distance between flange centroids	df=411 mm

Design parameters

Coefficient C1	C1=1
Young's modulus	E=210000 N/mm²
Shear modulus	G=81000 N/mm²
Yield strength	fy=345 N/mm²

Expression for lamLT (λLT)

The clause references in this section are as per Appendix C of SCI P356.
2nd moment of area (comp flange) Izc=1.5833E6 mm⁴
2nd moment of area (tens.flange) Izt=1.5833E6 mm⁴
For buckling over a half wavelength Lw the parameter V is as given by the expression below:

V=((4*a*(1-a)+0.05*lamF^2+psia^2)^0.5+psia)^-0.5=0.59424

Parameter from C.4.5 omega=PI^2*df^2*E*Iz/(G*It*Lw^2)
=0.77399

compute comp1=SQR(4+tee*omega)+psia
*SQR(omega)=2.1849

Parameter from C.4.5 Veq=(2*a*omega/comp1^2)^0.25=0.63455

The restraint parameter is calculated from the following expression as given in SCI publication P356:

$$rp = \left[\frac{Veq^4*Lw^3}{E*Izc*\theta R*df^2*(1-a)} \right]$$

Rotation of restraint θR thetaR=27E-12 rad/Nmm
Restraint parameter:
rp=Veq^4*Lw^3/(E*Izc*thetaR*df^2*(1-a))=109477 rad/Nmm
Longest unbraced length Lr=LT=4000 mm
Beta βw betaw=1.0
Plastic section modulus (yy axis) Wply=1.22E6 mm³

Section property from C.1 U=0.9
Non-dimensional slenderness λLT:

lamLT=1/(C1)^0.5*U*V*D*lamb*SQR(betaw)=1.3942

Partial factors on strength

Partial factor γM0 gamM0=1.0
Partial factor γM1 gamM1=1.1

Lateral torsional buckling

The the design lateral torsional buckling resistance moment (MbRd) will be calculated. Section under consideration is a Hot Rolled section and EC3 Part 1-1 Clause 6.3.2.3 expressions will be adopted.
Limiting slenderness value lamLT0=0.4
According to the NA to BS EN 1993-1-1, for rolled doubly symmetrical sections the imperfection value is as follows:
Imperfection value aLT=0.76 (curve d)
According to the NA to BS EN 1993-1-1, for not doubly symmetrical sections the imperfection value is as follows:
Imperfection value aLT=0.76 (curve d)
Modified chiLT factor ChiLT=chiLT/f=0.37499
Design buckling resistance moment MbRd=ChiLT*Wply*fy/(gamM1*10^6)
=143.49 kNm

Interaction equation for moments

The beam is assumed to be without longitudinal stiffeners. The design resistance for bending about the major axis as per Clause 6.2.5(2) of BS EN 1993-2:2006 is as follows:
Design moment resistance McRd=Wply*fy/(gamM0*10^6)=420.9 kNm
As MbRd ≤ McRd (143.49 kNm ≤ 420.9 kNm), the lateral torsional buckling resistance will be adopted.
Design moment from analysis MEd=135 kNm
Unity factor unity=MEd/MbRd=0.94085
As MEd ≤ MbRd (135 kNm ≤ 143.49 kNm), section chosen is considered to be suitable.

Shear resistance of a web of a beam with transverse stiffeners at supports and with or without intermediate transverse stiffeners

The shear resistance of a web under pure shear will be evaluated.
As hw/tw ≤ 72ε/η (35.636 ≤ 59.423), the beam is considered to be stable against shear buckling.

Shear-moment interaction

Design shear force (coexisting) VEd=450 kN
The value of parameter eta (η) is as per the NA to BS EN 1993-1-5.
Value of η from Clause 5.1(2) eta=1
Plastic shear resistance VplRd=eta*Aw*fy/(gamM0*SQR(3))/1000
=858.89 kN
The beam is not symmetrical and EC3 Part 1-1 expression 6.30 cannot be used. The plastic neutral axis at height x1 from the top of the bottom flange is found by balancing forces.
Allowable stress in the web fyw=(1-ro)*fy=344.21 N/mm²
Reduced design plastic moment resistance:

MyvRd=((A1*L1+A2*L2)*fy+(A3*L3+A4*L4)*fyw)/1E6=414.87 kNm

Design moment resistance McRd=420.9 kNm
Hence the moment resistance of the section reduces from 420.9 kNm to 414.87 kNm with coexistent shear of 450 kN.
As MEd ≤ MyvRd (135 kNm ≤ 414.87 kNm), the design moment is less than the design moment resistance. Hence OK.

Provide web transverse stiffeners at supports.

DESIGN SUMMARY	**Design moment**	**135 kNm**
	Design shear	**450 kN**
	Yield strength of steel	**345 N/mm²**
	Depth of beam	**430 mm**
	Top flange width	**100 mm**
	Bottom flange width	**100 mm**
	Classification	**Class 1**
	Design buckling resistance	**143.49 kNm**
	Plastic shear resistance	**858.89 kN**
	Unity factor	**0.94085 ≤ 1**

Location: Ex7 - Channel section using Mcr expression (Hot Rolled)

Evaluation of non-dimensional slenderness

The proforma is in accordance with BS EN 1993-2:2006 "Eurocode 3 Design of Steel Structures - Part 2 : Steel bridges" and the NA to to BS EN 1993-2:2006.

The proforma calculates the non-dimensional slenderness parameter lamLT (λLT) and utilises Appendix C of SCI publication P356 or Clause 6.3.2.2 of BS EN 1993-2:2006.

Compression flange classification will be taken as Class 1.
The web classification will be taken as Class 1.
The overall section classification is Class 1.

Geometrical parameters

Half wavelength of buckling	Lw=8000 mm
Eff.length between restraints	LT=4000 mm
Depth of section	h=430 mm
Flange width	b=100 mm
Flange thickness	tf=19 mm
Web thickness	tw=11 mm
Second moment of area (z-z axis)	Iz=7.22E6 mm^4
St.Venant torsional constant	It=630000 mm^4

Design parameters

Coefficient C1	C1=1
Young's modulus	E=210000 N/mm^2
Shear modulus	G=81000 N/mm^2
Yield strength	fy=345 N/mm^2

Expression for lamLT (λLT)

Beam width	b=100 mm
Web thickness	tw=11 mm
Warping constant	Iw=219E9 mm^6
Plastic section modulus (yy axis)	Wply=1.22E6 mm^3

Partial factors on strength

Partial factor γM0	gamM0=1.0
Partial factor γM1	gamM1=1.1

Lateral torsional buckling

The the design lateral torsional buckling resistance moment (MbRd) will be calculated. Section under consideration is a Hot Rolled section and EC3 Part 1-1 Clause 6.3.2.3 expressions will be adopted.
Limiting slenderness value lamLT0=0.4
According to the NA to BS EN 1993-1-1, for rolled doubly symmetrical sections the imperfection value is as follows:

Imperfection value aLT=0.76 (curve d)
According to the NA to BS EN 1993-1-1, for not doubly symmetrical sections the imperfection value is as follows:
Imperfection value aLT=0.76 (curve d)
Modified chiLT factor ChiLT=chiLT/f=0.43593
Design buckling resistance moment MbRd=ChiLT*Wply*fy/(gamM1*10^6)
=166.8 kNm

Interaction equation for moments

The beam is assumed to be without longitudinal stiffeners. The design resistance for bending about the major axis as per Clause 6.2.5(2) of BS EN 1993-2:2006 is as follows:
Design moment resistance McRd=Wply*fy/(gamM0*10^6)=420.9 kNm
As MbRd ≤ McRd (166.8 kNm ≤ 420.9 kNm), the lateral torsional buckling resistance will be adopted.
Design moment from analysis MEd=155 kNm
Unity factor unity=MEd/MbRd=0.92925
As MEd ≤ MbRd (155 kNm ≤ 166.8 kNm), section chosen is considered to be suitable.

Shear resistance of a web of a beam with transverse stiffeners at supports and with or without intermediate transverse stiffeners

The shear resistance of a web under pure shear will be evaluated.
As hw/tw ≤ 72ε/η (35.636 ≤ 59.423), the beam is considered to be stable against shear buckling.

Shear-moment interaction

Design shear force (coexisting) VEd=450 kN
The value of parameter eta (η) is as per the NA to BS EN 1993-1-5.
Value of η from Clause 5.1(2) eta=1
Plastic shear resistance VplRd=eta*Aw*fy/(gamM0*SQR(3))/1000
=858.89 kN
The beam is not symmetrical and EC3 Part 1-1 expression 6.30 cannot be used. The plastic neutral axis at height x1 from the top of the bottom flange is found by balancing forces.
Allowable stress in the web fyw=(1-ro)*fy=344.21 N/mm²
Reduced design plastic moment resistance:

MyvRd=((A1*L1+A2*L2)*fy+(A3*L3+A4*L4)*fyw)/1E6=414.87 kNm

Design moment resistance McRd=420.9 kNm
Hence the moment resistance of the section reduces from 420.9 kNm to 414.87 kNm with coexistent shear of 450 kN.
As MEd ≤ MyvRd (155 kNm ≤ 414.87 kNm), the design moment is less than the design moment resistance. Hence OK.

Provide web transverse stiffeners at supports.

DESIGN SUMMARY	**Design moment**	**155 kNm**
	Design shear	**450 kN**
	Yield strength of steel	**345 N/mm²**
	Depth of beam	**430 mm**
	Top flange width	**100 mm**
	Bottom flange width	**100 mm**
	Classification	**Class 1**
	Design buckling resistance	**166.8 kNm**
	Plastic shear resistance	**858.89 kN**
	Unity factor	**0.92925 ≤ 1**

Location: Ex8 - Hot Rolled I section using Mcr expression

Evaluation of non-dimensional slenderness

The proforma is in accordance with BS EN 1993-2:2006 "Eurocode 3 Design of Steel Structures - Part 2 : Steel bridges" and the NA to to BS EN 1993-2:2006.

The proforma calculates the non-dimensional slenderness parameter lamLT (λLT) and utilises Appendix C of SCI publication P356 or Clause 6.3.2.2 of BS EN 1993-2:2006.

Compression flange classification will be taken as Class 1.
The web classification will be taken as Class 1.
The overall section classification is Class 1.

Geometrical parameters

Half wavelength of buckling	Lw=9000 mm
Eff.length between restraints	LT=3000 mm
Depth of section	h=528.3 mm
Flange width	b=208.8 mm
Flange thickness	tf=13.2 mm
Web thickness	tw=9.6 mm
Distance between flange centroids	df=515 mm

Design parameters

Coefficient C1	C1=1
Young's modulus	E=210000 N/mm²
Shear modulus	G=81000 N/mm²
Yield strength	fy=275 N/mm²

Expression for lamLT (λLT)

Warping constant	Iw=1.3333E12 mm⁶
Plastic section modulus (yy axis)	Wply=2.06E6 mm³

Partial factors on strength

Partial factor γM0	gamM0=1.0
Partial factor γM1	gamM1=1.1

Lateral torsional buckling

The the design lateral torsional buckling resistance moment (MbRd) will be calculated. Section under consideration is a Hot Rolled section and EC3 Part 1-1 Clause 6.3.2.3 expressions will be adopted.

Limiting slenderness value	lamLT0=0.4

According to the NA to BS EN 1993-1-1, for rolled doubly symmetrical sections the imperfection value is as follows:

Imperfection value	aLT=0.49 (curve c)
Modified chiLT factor	ChiLT=chiLT/f=0.84391
Design buckling resistance moment	MbRd=ChiLT*Wply*fy/(gamM1*10^6)
	=434.61 kNm

Interaction equation for moments

The beam is assumed to be without longitudinal stiffeners. The design resistance for bending about the major axis as per Clause 6.2.5(2) of BS EN 1993-2:2006 is as follows:
Design moment resistance McRd=Wply*fy/(gamM0*10^6)=566.5 kNm
As MbRd ≤ McRd (434.61 kNm ≤ 566.5 kNm), the lateral torsional buckling resistance will be adopted.
Design moment from analysis MEd=425 kNm
Unity factor unity=MEd/MbRd=0.97788
As MEd ≤ MbRd (425 kNm ≤ 434.61 kNm), section chosen is considered to be suitable.

Shear resistance of a web of a beam with transverse stiffeners at supports and with or without intermediate transverse stiffeners

The shear resistance of a web under pure shear will be evaluated.
As hw/tw ≤ 72ε/η (52.281 ≤ 66.558), the beam is considered to be stable against shear buckling.

Shear-moment interaction

Design shear force (coexisting) VEd=400 kN
The value of parameter eta (η) is as per the NA to BS EN 1993-1-5.
Value of η from Clause 5.1(2) eta=1
Plastic shear resistance VplRd=eta*Aw*fy/(gamM0*SQR(3))/1000
=765 kN
As the beam is symmetric EC3 Part 1-1 expression 6.30 will be used to evaluate the reduced design plastic moment resistance:

MyvRd=(Wply-ro*Aw^2/(4*tw))*fy/(gamM0*1E6)=566.15 kNm

Design moment resistance McRd=566.5 kNm
Hence the moment resistance of the section reduces from 566.5 kNm to 566.15 kNm with coexistent shear of 400 kN.
As MEd ≤ MyvRd (425 kNm ≤ 566.15 kNm), the design moment is less than the design moment resistance. Hence OK.

Provide web transverse stiffeners at supports.

DESIGN SUMMARY	**Design moment**	**425 kNm**
	Design shear	**400 kN**
	Yield strength of steel	**275 N/mm²**
	Depth of beam	**528.3 mm**
	Flange width	**208.8 mm**
	Classification	**Class 1**
	Design buckling resistance	**434.61 kNm**
	Plastic shear resistance	**765 kN**
	Unity factor	**0.97788 ≤ 1**

Location: Ex9 - Beam 914x305x253 UKB (Hot Rolled section)

Evaluation of non-dimensional slenderness

The proforma is in accordance with BS EN 1993-2:2006 "Eurocode 3 Design of Steel Structures - Part 2 : Steel bridges" and the NA to to BS EN 1993-2:2006.

The proforma calculates the non-dimensional slenderness parameter lamLT (λLT) and utilises Appendix C of SCI publication P356 or Clause 6.3.2.2 of BS EN 1993-2:2006.

Compression flange classification will be taken as Class 1.
The web classification will be taken as Class 1.
The overall section classification is Class 1.

Geometrical parameters

Half wavelength of buckling	Lw=10000 mm
Eff.length between restraints	LT=2000 mm
Depth of section	h=918.5 mm
Flange width	b=305.5 mm
Flange thickness	tf=27.9 mm
Web thickness	tw=17.3 mm
Distance between flange centroids	df=890 mm

Design parameters

Coefficient C1	C1=1
Young's modulus	E=210000 N/mm²
Shear modulus	G=81000 N/mm²
Yield strength	fy=345 N/mm²

Expression for lamLT (λLT)

Warping constant	Iw=26.4E12 mm⁶
Plastic section modulus (yy axis)	Wply=10.9E6 mm³

Partial factors on strength

Partial factor γM0	gamM0=1.0
Partial factor γM1	gamM1=1.1

Lateral torsional buckling

The the design lateral torsional buckling resistance moment (MbRd) will be calculated. Section under consideration is a Hot Rolled section and EC3 Part 1-1 Clause 6.3.2.3 expressions will be adopted.
Limiting slenderness value lamLT0=0.4
As lamLT ≤ lamLT0, the segment of the beam is not subject to lateral torsional buckling.
The design buckling resistance MbRd will therefore be the same as the design resistance for bending McRd.
Design buckling resistance moment MbRd=Wply*fy/(gamM0*10^6)=3760.5 kNm

Design moment resistance McRd=MbRd=3760.5 kNm

Interaction equation for moments

The beam is assumed to be without longitudinal stiffeners. The design resistance for bending about the major axis as per Clause 6.2.5(2) of BS EN 1993-2:2006 is as follows:
Design moment resistance McRd=Wply*fy/(gamM0*10^6)=3760.5 kNm
As MbRd ≤ McRd (3760.5 kNm ≤ 3760.5 kNm), the lateral torsional buckling resistance will be adopted.
Design moment from analysis MEd=3500 kNm
Unity factor unity=MEd/MbRd=0.93073
As MEd ≤ MbRd (3500 kNm ≤ 3760.5 kNm), section chosen is considered to be suitable.

Shear resistance of a web of a beam with transverse stiffeners at supports and with or without intermediate transverse stiffeners

The shear resistance of a web under pure shear will be evaluated.
As hw/tw ≤ 72ε/η (49.867 ≤ 59.423), the beam is considered to be stable against shear buckling.

Shear-moment interaction

Design shear force (coexisting) VEd=182.3 kN
The value of parameter eta (η) is as per the NA to BS EN 1993-1-5.
Value of η from Clause 5.1(2) eta=1
Plastic shear resistance VplRd=eta*Aw*fy/(gamM0*SQR(3))/1000
=2972.8 kN
As VEd ≤ 0.5*VplRd, the design shear will not reduce the design resistance moment. Hence OK.

DESIGN SUMMARY	**Design moment**	**3500 kNm**
	Design shear	**182.3 kN**
	Yield strength of steel	**345 N/mm²**
	Depth of beam	**918.5 mm**
	Flange width	**305.5 mm**
	Classification	**Class 1**
	Design buckling resistance	**3760.5 kNm**
	Plastic shear resistance	**2972.8 kN**
	Unity factor	**0.93073 ≤ 1**

Location: Ex10 - ICE book worked example 6.2-12 (no shear buckling)

Evaluation of non-dimensional slenderness

The proforma is in accordance with BS EN 1993-2:2006 "Eurocode 3 Design of Steel Structures - Part 2 : Steel bridges" and the NA to to BS EN 1993-2:2006.

The proforma calculates the non-dimensional slenderness parameter lamLT (λLT) and utilises Appendix C of SCI publication P356 or Clause 6.3.2.2 of BS EN 1993-2:2006.

Compression flange classification will be taken as Class 2.
The web classification will be taken as Class 2.
The overall section classification is Class 2.

Geometrical parameters

Half wavelength of buckling	Lw=10000 mm
Eff.length between restraints	LT=1000 mm
Depth of section	h=1200 mm
Top flange width	bt=400 mm
Bottom flange width	bb=500 mm
Top flange thickness	tft=30 mm
Bottom flange thickness	tfb=30 mm
Web thickness	tw=20 mm
St.Venant torsional constant	It=11.1E6 mm^4
Second moment of area (z-z axis)	Iz=472E6 mm^4
Distance between flange centroids	df=1170 mm

Design parameters

Coefficient C1	C1=1.13
Young's modulus	E=210000 N/mm^2
Shear modulus	G=81000 N/mm^2
Yield strength	fy=355 N/mm^2

Expression for lamLT (λLT)

The clause references in this section are as per Appendix C of SCI P356.

2nd moment of area (comp flange)	Izc=312.5E6 mm^4
2nd moment of area (tens.flange)	Izt=160E6 mm^4

For buckling over a half wavelength Lw the parameter V is as given by the expression below:

V=((4*a*(1-a)+0.05*lamF^2+psia^2)^0.5+psia)^-0.5=0.84668

Parameter from C.4.5	omega=PI^2*df^2*E*Iz/(G*It*Lw^2) =14.894
compute	comp1=SQR(4+tee*omega)+psia *SQR(omega)=5.2785
Parameter from C.4.5	Veq=(2*a*omega/comp1^2)^0.25=0.917

The restraint parameter is calculated from the following expression as given in SCI publication P356:

$$rp = \left[\frac{Veq^4 * Lw^3}{E * Izc * \theta R * df^2 * (1-a)} \right]$$

Rotation of restraint θR thetaR=1E-15 rad/Nmm
Restraint parameter:
rp=Veq^4*Lw^3/(E*Izc*thetaR*df^2*(1-a))=23.244E6 rad/Nmm
Longest unbraced length Lr=LT=1000 mm
Beta βw betaw=1.0
Plastic section modulus (yy axis) Wply=22E6 mm³

Section property from C.1 U=0.9
Non-dimensional slenderness λLT:

lamLT=1/(C1)^0.5*U*V*D*lamb*SQR(betaw)=0.10196

Partial factors on strength

Partial factor γM0 gamM0=1.0
Partial factor γM1 gamM1=1.1

Lateral torsional buckling

The the design lateral torsional buckling resistance moment (MbRd) will be calculated. Section under consideration is a welded section and EC3 Part 1-1 Clause 6.3.2.2 expressions will be adopted.
Limiting slenderness value lamLT0=0.2
As lamLT ≤ lamLT0, the segment of the beam is not subject to lateral torsional buckling.
The design buckling resistance MbRd will therefore be the same as the design resistance for bending McRd.
Design buckling resistance moment MbRd=Wply*fy/(gamM0*10^6)=7810 kNm
Design moment resistance McRd=MbRd=7810 kNm

Interaction equation for moments

The beam is assumed to be without longitudinal stiffeners. The design resistance for bending about the major axis as per Clause 6.2.5(2) of BS EN 1993-2:2006 is as follows:
Design moment resistance McRd=Wply*fy/(gamM0*10^6)=7810 kNm
As MbRd ≤ McRd (7810 kNm ≤ 7810 kNm), the lateral torsional buckling resistance will be adopted.
Design moment from analysis MEd=7000 kNm
Unity factor unity=MEd/MbRd=0.89629
As MEd ≤ MbRd (7000 kNm ≤ 7810 kNm), section chosen is considered to be suitable.

Shear resistance of a web of a beam with transverse stiffeners at supports and with or without intermediate transverse stiffeners

The shear resistance of a web under pure shear will be evaluated.
As hw/tw ≤ 72ε/η (57 ≤ 58.58), the beam is considered to be stable against shear buckling.

Shear-moment interaction

Design shear force (coexisting) VEd=4486 kN
The value of parameter eta (η) is as per the NA to BS EN 1993-1-5.
Value of η from Clause 5.1(2) eta=1.2
Plastic shear resistance VplRd=eta*Aw*fy/(gamM0*SQR(3))/1000
=5607.7 kN
The beam is not symmetrical and EC3 Part 1-1 expression 6.30 cannot be used. The plastic neutral axis at height x1 from the top of the bottom flange is found by balancing forces.
Allowable stress in the web fyw=(1-ro)*fy=227.22 N/mm²
Reduced design plastic moment resistance:

MyvRd=((A1*L1+A2*L2)*fy+(A3*L3+A4*L4)*fyw)/1E6=7021.3 kNm

Design moment resistance McRd=7810 kNm
Hence the moment resistance of the section reduces from 7810 kNm to 7021.3 kNm with coexistent shear of 4486 kN.
As MEd ≤ MyvRd (7000 kNm ≤ 7021.3 kNm), the design moment is less than the design moment resistance. Hence OK.

Provide web transverse stiffeners at supports.

DESIGN SUMMARY	**Design moment**	**7000 kNm**
	Design shear	**4486 kN**
	Yield strength of steel	**355 N/mm²**
	Depth of beam	**1200 mm**
	Classification	**Class 2**
	Design buckling resistance	**7810 kNm**
	Plastic shear resistance	**5607.7 kN**
	Unity factor	**0.89629 ≤ 1**

Location: Ex11 - ICE book worked example 6.2-13 (no shear buckling)

Evaluation of non-dimensional slenderness

The proforma is in accordance with BS EN 1993-2:2006 "Eurocode 3 Design of Steel Structures - Part 2 : Steel bridges" and the NA to to BS EN 1993-2:2006.

The proforma calculates the non-dimensional slenderness parameter lamLT (λLT) and utilises Appendix C of SCI publication P356 or Clause 6.3.2.2 of BS EN 1993-2:2006.

Compression flange classification will be taken as Class 3.
The web classification will be taken as Class 3.
The overall section classification is Class 3.

Geometrical parameters

Half wavelength of buckling	Lw=10000 mm
Eff.length between restraints	LT=1000 mm
Depth of section	h=2060 mm
Flange width	b=400 mm
Flange thickness	tf=30 mm
Web thickness	tw=20 mm
Distance between flange centroids	df=2030 mm

Design parameters

Coefficient C1	C1=1.13
Young's modulus	E=210000 N/mm²
Shear modulus	G=81000 N/mm²
Yield strength	fy=355 N/mm²

Expression for lamLT (λLT)

The clause references in this section are as per Appendix C of SCI P356.
The following are the 2nd moments of area of the compression and tension flanges, respectively, about the z-z axes:
For buckling over a half wavelength Lw the parameter V is as given by the expression below:

V=((4*a*(1-a)+0.05*lamF^2+psia^2)^0.5+psia)^-0.5=0.95305

Parameter from C.4.5 Veq=V=0.95305

The restraint parameter is calculated from the following expression as given in SCI publication P356:

$$rp = \left[\frac{Veq^4 * Lw^3}{E * Izc * \theta R * df^2 * (1-a)} \right]$$

Rotation of restraint θR thetaR=1E-15 rad/Nmm

Restraint parameter:

rp=Veq^4*Lw^3/(E*Izc*thetaR*df^2*(1-a))=11.917E6 rad/Nmm

Longest unbraced length Lr=LT=1000 mm

Plastic section modulus (yy axis) Wply=44.36E6 mm³

Elastic section modulus (yy axis) Wely=37.5E6 mm³
Beta βw betaw=Wely/Wply=0.84536
Section property from C.1 U=0.9
Non-dimensional slenderness λLT:

lamLT=1/(C1)^0.5*U*V*D*lamb*SQR(betaw)=0.14182

Partial factors on strength

Partial factor γM0 gamM0=1.0
Partial factor γM1 gamM1=1.1

Lateral torsional buckling

The the design lateral torsional buckling resistance moment (MbRd) will be calculated. Section under consideration is a welded section and EC3 Part 1-1 Clause 6.3.2.2 expressions will be adopted.
Limiting slenderness value lamLT0=0.2
As lamLT ≤ lamLT0, the segment of the beam is not subject to lateral torsional buckling.
The design buckling resistance MbRd will therefore be the same as the design resistance for bending McRd.
Design buckling resistance moment MbRd=Wely*fy/(gamM0*10^6)=13313 kNm
Design moment resistance McRd=MbRd=13313 kNm

Interaction equation for moments

The beam is assumed to be without longitudinal stiffeners. The design resistance for bending about the major axis as per Clause 6.2.5(2) of BS EN 1993-2:2006 is as follows:
Design moment resistance McRd=Wely*fy/(gamM0*10^6)=13313 kNm
As MbRd ≤ McRd (13313 kNm ≤ 13313 kNm), the lateral torsional buckling resistance will be adopted.
Design moment from analysis MEd=10000 kNm
Unity factor unity=MEd/MbRd=0.75117
As MEd ≤ MbRd (10000 kNm ≤ 13313 kNm), section chosen is considered to be suitable.

Shear resistance of a web of a beam with transverse stiffeners at supports and with or without intermediate transverse stiffeners

The shear resistance of a web under pure shear will be evaluated. Beam will be stable against shear buckling due to the presence of closely spaced web transverse stiffeners.

Shear-moment interaction

Design shear force (coexisting) VEd=7871 kN
The value of parameter eta (η) is as per the NA to BS EN 1993-1-5.
Value of η from Clause 5.1(2) eta=1.2
Plastic shear resistance VplRd=eta*Aw*fy/(gamM0*SQR(3))/1000
=9838 kN

As the beam is symmetric EC3 Part 1-1 expression 6.30 will be used to evaluate the reduced design plastic moment resistance:

MyvRd=(Wply-ro*Aw^2/(4*tw))*fy/(gamM0*1E6)=13191 kNm

Design moment resistance McRd=13313 kNm
Hence the moment resistance of the section reduces from 13313 kNm to 13191 kNm with coexistent shear of 7871 kN.
As MEd ≤ MyvRd (10000 kNm ≤ 13191 kNm), the design moment is less than the design moment resistance. Hence OK.

Beam is assumed to be stable against shear buckling due to the presence of closely spaced intermediate web transverse stiffeners.

Provide web transverse stiffeners at supports.

DESIGN SUMMARY	**Design moment**	**10000 kNm**
	Design shear	**7871 kN**
	Yield strength of steel	**355 N/mm²**
	Depth of beam	**2060 mm**
	Flange width	**400 mm**
	Classification	**Class 3**
	Design buckling resistance	**13313 kNm**
	Plastic shear resistance	**9838 kN**
	Unity factor	**0.75117 ≤ 1**

Location: Ex12 - ICE book worked example 6.2-13 (w. shear buckling)

Evaluation of non-dimensional slenderness

The proforma is in accordance with BS EN 1993-2:2006 "Eurocode 3 Design of Steel Structures - Part 2 : Steel bridges" and the NA to to BS EN 1993-2:2006.

The proforma calculates the non-dimensional slenderness parameter lamLT (λLT) and utilises Appendix C of SCI publication P356 or Clause 6.3.2.2 of BS EN 1993-2:2006.

Compression flange classification will be taken as Class 3.
The web classification will be taken as Class 3.
The overall section classification is Class 3.

Geometrical parameters

Half wavelength of buckling	Lw=9000 mm
Eff.length between restraints	LT=1000 mm
Depth of section	h=2060 mm
Flange width	b=400 mm
Flange thickness	tf=30 mm
Web thickness	tw=20 mm
Distance between flange centroids	df=2030 mm

Design parameters

Coefficient C1	C1=1.13
Young's modulus	E=210000 N/mm²
Shear modulus	G=81000 N/mm²
Yield strength	fy=355 N/mm²

Expression for lamLT (λLT)

The clause references in this section are as per Appendix C of SCI P356.
The following are the 2nd moments of area of the compression and tension flanges, respectively, about the z-z axes:
For buckling over a half wavelength Lw the parameter V is as given by the expression below:

V=((4*a*(1-a)+0.05*lamF^2+psia^2)^0.5+psia)^-0.5=0.96114

Parameter from C.4.5 Veq=V=0.96114

The restraint parameter is calculated from the following expression as given in SCI publication P356:

$$rp = \left[\frac{Veq^4 * Lw^3}{E * Izc * \theta R * df^2 * (1-a)} \right]$$

Rotation of restraint θR thetaR=1E-15 rad/Nmm

Restraint parameter:

rp=Veq^4*Lw^3/(E*Izc*thetaR*df^2*(1-a))=8.9862E6 rad/Nmm

Longest unbraced length Lr=LT=1000 mm

Plastic section modulus (yy axis) Wply=44.36E6 mm³

Elastic section modulus (yy axis) Wely=37E6 mm³
Beta βw betaw=Wely/Wply=0.83408
Section property from C.1 U=0.9
Non-dimensional slenderness λLT:

lamLT=1/(C1)^0.5*U*V*D*lamb*SQR(betaw)=0.14129

Partial factors on strength

Partial factor γM0 gamM0=1.0
Partial factor γM1 gamM1=1.1

Lateral torsional buckling

The the design lateral torsional buckling resistance moment (MbRd) will be calculated. Section under consideration is a welded section and EC3 Part 1-1 Clause 6.3.2.2 expressions will be adopted.
Limiting slenderness value lamLT0=0.2
As lamLT ≤ lamLT0, the segment of the beam is not subject to lateral torsional buckling.
The design buckling resistance MbRd will therefore be the same as the design resistance for bending McRd.
Design buckling resistance moment MbRd=Wely*fy/(gamM0*10^6)=13135 kNm
Design moment resistance McRd=MbRd=13135 kNm

Interaction equation for moments

The beam is assumed to be without longitudinal stiffeners. The design resistance for bending about the major axis as per Clause 6.2.5(2) of BS EN 1993-2:2006 is as follows:
Design moment resistance McRd=Wely*fy/(gamM0*10^6)=13135 kNm
As MbRd ≤ McRd (13135 kNm ≤ 13135 kNm), the lateral torsional buckling resistance will be adopted.
Design moment from analysis MEd=10000 kNm
Unity factor unity=MEd/MbRd=0.76132
As MEd ≤ MbRd (10000 kNm ≤ 13135 kNm), section chosen is considered to be suitable.

Shear resistance of a web of a beam with transverse stiffeners at supports and with or without intermediate transverse stiffeners

The shear resistance of a web under pure shear will be evaluated.
As hw/tw > 72ε/η (100 > 58.58), beam is susceptible to shear buckling as there are no web transverse stiffeners except at supports.

Shear-moment interaction

Design shear force (coexisting) VEd=4000 kN
Plastic moment resistance MplRd=Wply*fy/(gamM0*1E6)=15748 kNm
Design shear buckling resistance assuming no contribution from the flanges is given by expression 5.2 (EC3 Part 1-5):
VbwRd=chiw*fy*hw*tw/(gamM1*SQR(3))/1000=4810.6 kN
Shear ratio η1 eta1=MEd/MplRd=0.63501
Plastic moment resistance ignoring the web is:

```
                  MfRd=(Wply-Aw^2/(4*tw))*fy/(gamM0*1E6)=8647.8 kNm
Expression 7.1    u1=eta1+(1-MfRd/MplRd)*(2*eta3-1)^2=0.83319
                    ≤ 1 hence OK.
Provide web transverse stiffeners at supports.
```

DESIGN SUMMARY	**Design moment**	**10000 kNm**
	Design shear	**4000 kN**
	Yield strength of steel	**355 N/mm²**
	Depth of beam	**2060 mm**
	Flange width	**400 mm**
	Classification	**Class 3**
	Design buckling resistance	**13135 kNm**
	Unity factor	**0.76132 ≤ 1**

Location: Ex13 - Symmetrical composite section (with shear buckling)

Evaluation of non-dimensional slenderness

The proforma is in accordance with BS EN 1993-2:2006 "Eurocode 3 Design of Steel Structures - Part 2 : Steel bridges" and the NA to to BS EN 1993-2:2006.

The proforma calculates the non-dimensional slenderness parameter lamLT (λLT) using the simplified method of EN 1993-2, as allowed by BS EN 1994-2:2005.

Expression for lamLT (λLT) - composite construction

The section under consideration is assumed to be at an internal support of a continues girder where hogging bending moment with axial force are present. The non-dimensional slenderness lamLT (λLT) could be derived from the following expression as per Clause 6.3.4.2(4):

$$\lambda LT = \left[\frac{fy.Aeff}{Ncrit} \right]$$

where,

Ncrit = Elastic critical load
fy = Yield strength
Aeff = Effective area of the chord

Geometrical and design parameters

Compression flange classification will be taken as Class 3.
Section symmetrical about both major and minor axis (equal flanges).

Eff.length between restraints	LT=5000 mm
Depth of section	h=2060 mm
Flange width	b=400 mm
Flange thickness	tf=30 mm
Web thickness	tw=20 mm
Yield strength	fy=345 N/mm²
Non-dimensional slenderness λLT	lamLT=SQR(fy*Aeff/(Ncrit*1E3))=0.69678

Partial factors on strength

Partial factor γM0	gamM0=1.0
Partial factor γM1	gamM1=1.1

Lateral torsional buckling

The the design lateral torsional buckling resistance moment (MbRd) will be calculated. Section under consideration is a welded section and EC3 Part 1-1 Clause 6.3.2.2 expressions will be adopted.
Limiting slenderness value lamLT0=0.2
According to the NA to BS EN 1993-1-1, for welded doubly symmetrical sections the imperfection value is as follows:

Imperfection value	aLT=0.76 (curve d)
Modified chiLT factor	ChiLT=chiLT/f=0.64525
Total design hogging moment	Mmax=10000 kNm
Design moment on steel section	MaEd=3000 kNm
Composite cracked section moment	McEd=Mmax-MaEd=7000 kNm
Design yield strength of steel	fyd=fy/gamM1=313.64 N/mm²
Construction stage:	
Stress in steel bottom flange	ssbf1=45 N/mm²
Composite stage:	
Stress in steel bottom flange	ssbf2=150 N/mm²
Factor k (EN 1994-2 Cl. 6.2.1.4)	k=(fyd-ssbf1)/ssbf2=1.7909
Design elastic resistance moment	MelRd=MaEd+k*McEd=15536 kNm
Modification factor	ChiLT=0.64525
Design buckling resistance moment	MbRd=ChiLT*MelRd=10025 kNm

Interaction equation for moments

Distance	L1=0.25*L/SQR(m)=1250 mm
Design moment at brace position	M2=5000 kNm
Design moment from analysis	MEd=M1-(M1-M2)*L1/L=8750 kNm
Axial stress from the analysis	stress=4 N/mm²
Axial load	NEd=Aeff*stress/1000=74.667 kN
Axial resistance of Tee section	NbRd=ChiLT*Aeff*fyd/1000=3777.7 kN
Unity factor	unity=MEd/MbRd+NEd/NbRd=0.89259

As unity ≤ 1, section chosen is considered to be suitable.

Shear resistance of a web of a beam with transverse stiffeners at supports and with or without intermediate transverse stiffeners

The shear resistance of a web under pure shear will be evaluated.
As hw/tw > 72ε/η (100 > 59.423), beam is susceptible to shear buckling as there are no web transverse stiffeners except at supports.
Plastic section modulus (yy axis) Wply=44.36E6 mm³

Shear-moment interaction

Design shear force (coexisting)	VEd=4000 kN
Plastic moment resistance	MplRd=Wply*fy/(gamM0*1E6)=15304 kNm

Design shear buckling resistance assuming no contribution from the flanges is given by expression 5.2 (EC3 Part 1-5):
VbwRd=chiw*fy*hw*tw/(gamM1*SQR(3))/1000=4720 kN

Shear ratio η1	eta1=MEd/MplRd=0.57174
Area of top reinforcement	A1=12000 mm²
Area of bottom reinforcement	A2=12000 mm²

Axial resistance of the top bars and top flange:
F1=((A1+A2)*500/1.15+tf*b*fy)/(gamM0*1000)=14575 kN
Axial resistance of the bottom flange:
F2=tf*b*fy/(gamM0*1000)=4140 kN

Lever arm	dfc=2100 mm

Plastic moment resistance ignoring the web is:
MfRd=Fmin*dfc/(gamM0*1E3)=8694 kNm
Expression 7.1 u1=eta1+(1-MfRd/MplRd)*(2*eta3-1)^2=0.57175
≤ 1 hence OK.
Provide web transverse stiffeners at supports.

DESIGN SUMMARY	**Design moment**	**8750 kNm**
	Design shear	**4000 kN**
	Yield strength of steel	**345 N/mm²**
	Depth of beam	**2060 mm**
	Flange width	**400 mm**
	Classification	**Class 3**
	Design buckling resistance	**10025 kNm**
	Unity factor	**0.89259 ≤ 1**

Location: Ex14 - Non-symmetrical composite sect. (w. shear buckling)

Evaluation of non-dimensional slenderness

The proforma is in accordance with BS EN 1993-2:2006 "Eurocode 3 Design of Steel Structures - Part 2 : Steel bridges" and the NA to to BS EN 1993-2:2006.

The proforma calculates the non-dimensional slenderness parameter lamLT (λLT) using the simplified method of EN 1993-2, as allowed by BS EN 1994-2:2005.

Expression for lamLT (λLT) - composite construction

The section under consideration is assumed to be at an internal support of a continues girder where hogging bending moment with axial force are present. The non-dimensional slenderness lamLT (λLT) could be derived from the following expression as per Clause 6.3.4.2(4):

$$\lambda LT = \left[\frac{fy.Aeff}{Ncrit} \right]$$

where,

Ncrit = Elastic critical load
fy = Yield strength
Aeff = Effective area of the chord

Geometrical and design parameters

Compression flange classification will be taken as Class 3.
Section symmetrical only about the minor axis (unequal flanges).

Eff.length between restraints	LT=5000 mm
Depth of section	h=2060 mm
Top flange width	bt=400 mm
Bottom flange width	bb=600 mm
Top flange thickness	tft=30 mm
Bottom flange thickness	tfb=40 mm
Web thickness	tw=20 mm
Yield strength	fy=345 N/mm²
Non-dimensional slenderness λLT	lamLT=SQR(fy*Aeff/(Ncrit*1E3))=0.41081

Partial factors on strength

Partial factor γM0	gamM0=1.0
Partial factor γM1	gamM1=1.1

Lateral torsional buckling

The the design lateral torsional buckling resistance moment (MbRd) will be calculated. Section under consideration is a welded section and EC3 Part 1-1 Clause 6.3.2.2 expressions will be adopted.
Limiting slenderness value lamLT0=0.2
According to the NA to BS EN 1993-1-1, Tables 6.3 and 6.4 could be used with Clause 6.3.2.2 to determine the imperfection factor αLT.

Imperfection value	aLT=0.76 (curve d)
Modified chiLT factor	ChiLT=chiLT/f=0.84262
Total design hogging moment	Mmax=10000 kNm
Design moment on steel section	MaEd=3000 kNm
Composite cracked section moment	McEd=Mmax-MaEd=7000 kNm
Design yield strength of steel	fyd=fy/gamM1=313.64 N/mm²
Construction stage:	
Stress in steel bottom flange	ssbf1=45 N/mm²
Composite stage:	
Stress in steel bottom flange	ssbf2=150 N/mm²
Factor k (EN 1994-2 Cl. 6.2.1.4)	k=(fyd-ssbf1)/ssbf2=1.7909
Design elastic resistance moment	MelRd=MaEd+k*McEd=15536 kNm
Modification factor	ChiLT=0.84262
Design buckling resistance moment	MbRd=ChiLT*MelRd=13091 kNm

Interaction equation for moments

Distance	L1=0.25*L/SQR(m)=1250 mm
Design moment at brace position	M2=5000 kNm
Design moment from analysis	MEd=M1-(M1-M2)*L1/L=8750 kNm
Axial stress from the analysis	stress=4 N/mm²
Axial load	NEd=Aeff*stress/1000=116.8 kN
Axial resistance of Tee section	NbRd=ChiLT*Aeff*fyd/1000=7716.8 kN
Unity factor	unity=MEd/MbRd+NEd/NbRd=0.68352

As unity ≤ 1, section chosen is considered to be suitable.

Shear resistance of a web of a beam with transverse stiffeners at supports and with or without intermediate transverse stiffeners

The shear resistance of a web under pure shear will be evaluated.
As hw/tw > 72ε/η (99.5 > 59.423), beam is susceptible to shear buckling as there are no web transverse stiffeners except at supports.
Plastic section modulus (yy axis) Wply=52.68E6 mm³

Shear-moment interaction

Design shear force (coexisting)	VEd=4000 kN
Plastic moment resistance	MplRd=Wply*fy/(gamM0*1E6)=18175 kNm

Design shear buckling resistance assuming no contribution from the flanges is given by expression 5.2 (EC3 Part 1-5):
VbwRd=chiw*fy*hw*tw/(gamM1*SQR(3))/1000=4712.1 kN

Shear ratio η1	eta1=MEd/MplRd=0.48144
Area of top reinforcement	A1=12000 mm²
Area of bottom reinforcement	A2=12000 mm²

Axial resistance of the top bars and top flange:
F1=((A1+A2)*500/1.15+tft*bt*fy)/(gamM0*1000)=14575 kN
Axial resistance of the bottom flange:
F2=tfb*bb*fy/(gamM0*1000)=8280 kN

Lever arm	dfc=2100 mm

Plastic moment resistance ignoring the web is:
MfRd=Fmin*dfc/(gamM0*1E3)=17388 kNm
Expression 7.1 u1=eta1+(1-MfRd/MplRd)*(2*eta3-1)^2=0.50251
≤ 1 hence OK.
Provide web transverse stiffeners at supports.

DESIGN SUMMARY	**Design moment**	**8750 kNm**
	Design shear	**4000 kN**
	Yield strength of steel	**345 N/mm²**
	Depth of beam	**2060 mm**
	Classification	**Class 3**
	Design buckling resistance	**13091 kNm**
	Unity factor	**0.68352 ≤ 1**

Location: Ex15- Hot Rolled 400x400x20 SHS

Evaluation of non-dimensional slenderness

The proforma is in accordance with BS EN 1993-2:2006 "Eurocode 3 Design of Steel Structures - Part 2 : Steel bridges" and the NA to to BS EN 1993-2:2006.

The proforma calculates the non-dimensional slenderness parameter lamLT (λLT) and utilises Clause 6.3.2.2 of BS EN 1993-2:2006.

Expression for lamLT (λLT)

The non-dimensional slenderness lamLT (λLT) could be derived from the following expression:

$$\lambda LT = \left[\frac{fy.Wy}{Mcr} \right]$$

where,

Mcr = Elastic critical buckling moment from the analysis
fy = Yield strength
Wy = Plastic modulus of the section about y-y axis

Compression flange classification will be taken as Class 2.
The web classification will be taken as Class 2.
The overall section classification is Class 2.

Geometrical parameters

Eff.length between restraints	LT=5000 mm
Depth of section	h=400 mm
Flange thickness	tf=20 mm
Plastic section modulus (yy axis)	Wply=4.25E6 mm³

Design parameters

Young's modulus	E=210000 N/mm²
Shear modulus	G=81000 N/mm²
Yield strength	fy=345 N/mm²

Non-dimensional slenderness (λLT)

Effective length parameter	K=1
Length for LTB	LT=LT/1000=5 m
Critical moment	Mcr=C1*Et*Gt^0.5/10^6=72772 kNm
Non-dimensional slenderness	lamLT=(Wply*fy/(Mcr*10^6))^0.5=0.14195

Partial factors on strength

Partial factor γM0	gamM0=1.0
Partial factor γM1	gamM1=1.1

Lateral torsional buckling

The the design lateral torsional buckling resistance moment (MbRd) will be calculated. Section under consideration is a Hot Rolled section and EC3 Part 1-1 Clause 6.3.2.3 expressions will be adopted.
Limiting slenderness value lamLT0=0.4
As lamLT ≤ lamLT0, the segment of the beam is not subject to lateral torsional buckling.
The design buckling resistance MbRd will therefore be the same as the design resistance for bending McRd.
Design buckling resistance moment MbRd=Wply*fy/(gamM0*10^6)=1466.3 kNm
Design moment resistance McRd=MbRd=1466.3 kNm

Interaction equation for moments

The beam is assumed to be without longitudinal stiffeners. The design resistance for bending about the major axis as per Clause 6.2.5(2) of BS EN 1993-2:2006 is as follows:
Design moment resistance McRd=Wply*fy/(gamM0*10^6)=1466.3 kNm
As MbRd ≤ McRd (1466.3 kNm ≤ 1466.3 kNm), the lateral torsional buckling resistance will be adopted.
Design moment from analysis MEd=1100 kNm
Unity factor unity=MEd/MbRd=0.75021
As MEd ≤ MbRd (1100 kNm ≤ 1466.3 kNm), section chosen is considered to be suitable.

Shear resistance of a web of a beam with transverse stiffeners at supports and with or without intermediate transverse stiffeners

The shear resistance of a web under pure shear will be evaluated.
As hw/tw ≤ 72ε/η (18 ≤ 59.423), the beam is considered to be stable against shear buckling.

Shear-moment interaction

Design shear force (coexisting) VEd=2300 kN
The value of parameter eta (η) is as per the NA to BS EN 1993-1-5.
Value of η from Clause 5.1(2) eta=1
Plastic shear resistance VplRd=eta*Aw*fy/(gamM0*SQR(3))/1000
=3027.6 kN
As the beam is symmetric EC3 Part 1-1 expression 6.30 will be used to evaluate the reduced design plastic moment resistance:

MyvRd=(Wply-ro*Aw^2/(4*tw))*fy/(gamM0*1E6)=1197.5 kNm

Design moment resistance McRd=1466.3 kNm
Hence the moment resistance of the section reduces from 1466.3 kNm to 1197.5 kNm with coexistent shear of 2300 kN.
As MEd ≤ MyvRd (1100 kNm ≤ 1197.5 kNm), the design moment is less than the design moment resistance. Hence OK.

Provide web transverse stiffeners at supports.

DESIGN SUMMARY	**Design moment**	**1100 kNm**
	Design shear	**2300 kN**
	Yield strength of steel	**345 N/mm²**
	Depth of beam	**400 mm**
	Flange width	**400 mm**
	Classification	**Class 2**
	Design buckling resistance	**1466.3 kNm**
	Plastic shear resistance	**3027.6 kN**
	Unity factor	**0.75021 ≤ 1**

Location: Ex16 - Welded RHS beam 1000x400 RHS (with shear buckling)

Evaluation of non-dimensional slenderness

The proforma is in accordance with BS EN 1993-2:2006 "Eurocode 3 Design of Steel Structures - Part 2 : Steel bridges" and the NA to to BS EN 1993-2:2006.

The proforma calculates the non-dimensional slenderness parameter lamLT (λLT) and utilises Clause 6.3.2.2 of BS EN 1993-2:2006.

Expression for lamLT (λLT)

The non-dimensional slenderness lamLT (λLT) could be derived from the following expression:

$$\lambda LT = \left[\frac{fy.Wy}{Mcr} \right]$$

where,

Mcr = Elastic critical buckling moment from the analysis
fy = Yield strength
Wy = Plastic modulus of the section about y-y axis

Compression flange classification will be taken as Class 1.
The web classification will be taken as Class 1.
The overall section classification is Class 1.

Geometrical parameters

Eff.length between restraints	LT=8000 mm
Depth of section	h=1000 mm
Flange width	b=400 mm
Top flange thickness	tft=20 mm
Bottom flange thickness	tfb=20 mm
Web thickness	tw=16 mm
Plastic section modulus (yy axis)	Wply=18E6 mm³

Design parameters

Young's modulus	E=210000 N/mm²
Shear modulus	G=81000 N/mm²
Yield strength	fy=345 N/mm²

Non-dimensional slenderness (λLT)

Effective length parameter	K=1
Length for LTB	LT=LT/1000=8 m
Critical moment	Mcr=C1*Et*Gt^0.5/10^6=118342 kNm
Non-dimensional slenderness	lamLT=(Wply*fy/(Mcr*10^6))^0.5=0.22907

Partial factors on strength

Partial factor γM0 gamM0=1.0
Partial factor γM1 gamM1=1.1

Lateral torsional buckling

The the design lateral torsional buckling resistance moment (MbRd) will be calculated. Section under consideration is a welded section and EC3 Part 1-1 Clause 6.3.2.2 expressions will be adopted.
Limiting slenderness value lamLT0=0.2
According to the NA to BS EN 1993-1-1, Tables 6.3 and 6.4 could be used with Clause 6.3.2.2 to determine the imperfection factor αLT.
Imperfection value aLT=0.76 (curve d)
Modified chiLT factor ChiLT=chiLT/f=0.97724
Design buckling resistance moment MbRd=ChiLT*Wply*fy/(gamM1*10^6)
=5517 kNm

Interaction equation for moments

The beam is assumed to be without longitudinal stiffeners. The design resistance for bending about the major axis as per Clause 6.2.5(2) of BS EN 1993-2:2006 is as follows:
Design moment resistance McRd=Wply*fy/(gamM0*10^6)=6210 kNm
As MbRd ≤ McRd (5517 kNm ≤ 6210 kNm), the lateral torsional buckling resistance will be adopted.
Design moment from analysis MEd=1600 kNm
Unity factor unity=MEd/MbRd=0.29001
As MEd ≤ MbRd (1600 kNm ≤ 5517 kNm), section chosen is considered to be suitable.

Shear resistance of a web of a beam with transverse stiffeners at supports and with or without intermediate transverse stiffeners

The shear resistance of a web under pure shear will be evaluated.
As hw/tw > 72ε/η (60 > 59.423), beam is susceptible to shear buckling as there are no web transverse stiffeners except at supports.

Shear-moment interaction

Design shear force (coexisting) VEd=2300 kN
Plastic moment resistance MplRd=Wply*fy/(gamM0*1E6)=6210 kNm
Design shear buckling resistance assuming no contribution from the flanges is given by expression 5.2 (EC3 Part 1-5):
VbwRd=chiw*fy*hw*tw/(gamM1*SQR(3))/1000=2743.6 kN
Shear ratio η1 eta1=MEd/MplRd=0.25765
Plastic moment resistance ignoring the web is:
MfRd=(Wply-Aw^2/(4*tw))*fy/(gamM0*1E6)=206.72 kNm
Expression 7.1 u1=eta1+(1-MfRd/MplRd)*(2*eta3-1)^2=0.70023
≤ 1 hence OK.
Provide web transverse stiffeners at supports.

DESIGN SUMMARY	**Design moment**	**1600 kNm**
	Design shear	**2300 kN**
	Yield strength of steel	**345 N/mm²**
	Depth of beam	**1000 mm**
	Flange width	**400 mm**
	Classification	**Class 1**
	Design buckling resistance	**5517 kNm**
	Unity factor	**0.29001 ≤ 1**

Location: Ex17- Hot Rolled Angle 200x150 UKA

Evaluation of non-dimensional slenderness

The proforma is in accordance with BS EN 1993-2:2006 "Eurocode 3 Design of Steel Structures - Part 2 : Steel bridges" and the NA to to BS EN 1993-2:2006.

The proforma calculates the non-dimensional slenderness parameter lamLT (λLT) from an elastic buckling analysis of the structure.

Expression for lamLT (λLT)

The non-dimensional slenderness lamLT (λLT) could be derived from the following expression:

$$\lambda LT = \left[\frac{fy.Wy}{Mcr} \right]$$

where,

Mcr = Elastic critical buckling moment from the analysis
fy = Yield strength
Wy = Plastic modulus of the section about y-y axis

Geometrical and design parameters

Section is not symmetrical about either axis (Tee section).
Section under consideration is a Hot Rolled section.

Eff.length between restraints	LT=4000 mm
Depth of section	h=200 mm
Width of section	b=150 mm
Plate thickness	tf=18 mm
Web thickness	tw=18 mm
Yield strength	fy=345 N/mm²
Section classification	class=3

The overall section classification will be taken as Class 3.

Elastic section modulus (yy axis)	Wely=174000 mm³
Bending moment Mcr	Mcr=150 kNm
Non-dimensional slenderness λLT	lamLT=SQR(fy*Wely/(Mcr*1E6))=0.63261

Partial factors on strength

Partial factor γM0	gamM0=1.0
Partial factor γM1	gamM1=1.1

Lateral torsional buckling

The the design lateral torsional buckling resistance moment (MbRd) will be calculated. Section under consideration is a Hot Rolled section and EC3 Part 1-1 Clause 6.3.2.3 expressions will be adopted.

Limiting slenderness value lamLT0=0.4

According to the NA to BS EN 1993-1-1, for all other Hot-Rolled sections the imperfection value is as follows:

Imperfection value aLT=0.76 (curve d)
Modified chiLT factor ChiLT=chiLT/f=0.81062
Design buckling resistance moment MbRd=ChiLT*Wely*fy/(gamM1*10^6)
=44.238 kNm

Interaction equation for moments

The beam is assumed to be without longitudinal stiffeners. The design resistance for bending about the major axis as per Clause 6.2.5(2) of BS EN 1993-2:2006 is as follows:
Design moment resistance McRd=Wely*fy/(gamM0*10^6)=60.03 kNm
As MbRd ≤ McRd (44.238 kNm ≤ 60.03 kNm), the lateral torsional buckling resistance will be adopted.
Design moment from analysis MEd=40 kNm
Unity factor unity=MEd/MbRd=0.90421
As MEd ≤ MbRd (40 kNm ≤ 44.238 kNm), section chosen is considered to be suitable.

Shear resistance of a web of a beam with transverse stiffeners at supports and with or without intermediate transverse stiffeners

The shear resistance of a web under pure shear will be evaluated.
As hw/tw ≤ 72ε/η (10.111 ≤ 59.423), the beam is considered to be stable against shear buckling.

Shear-moment interaction

Design shear force (coexisting) VEd=300 kN
The value of parameter eta (η) is as per the NA to BS EN 1993-1-5.
Value of η from Clause 5.1(2) eta=1
Plastic shear resistance VplRd=eta*Aw*fy/(gamM0*SQR(3))/1000
=652.53 kN
As VEd ≤ 0.5*VplRd, the design shear will not reduce the design resistance moment. Hence OK.

DESIGN SUMMARY	**Design moment**	**40 kNm**
	Design shear	**300 kN**
	Yield strength of steel	**345 N/mm²**
	Depth of beam	**200 mm**
	Width of section	**150 mm**
	Classification	**Class 3**
	Design buckling resistance	**44.238 kNm**
	Plastic shear resistance	**652.53 kN**
	Unity factor	**0.90421 ≤ 1**

Location: Ex18 - As Ex1 but using Class 4 section

Evaluation of non-dimensional slenderness

The proforma is in accordance with BS EN 1993-2:2006 "Eurocode 3 Design of Steel Structures - Part 2 : Steel bridges" and the NA to to BS EN 1993-2:2006.

The proforma calculates the non-dimensional slenderness parameter lamLT (λLT) and utilises Appendix C of SCI publication P356 or Clause 6.3.2.2 of BS EN 1993-2:2006.

Compression flange classification will be taken as Class 3.
The web classification will be taken as Class 4.
The overall section classification is Class 4.

Geometrical parameters

Half wavelength of buckling	Lw=28000 mm
Eff.length between restraints	LT=8200 mm
Depth of section	h=1100 mm
Top flange width	bt=500 mm
Bottom flange width	bb=500 mm
Top flange thickness	tft=40 mm
Bottom flange thickness	tfb=40 mm
Web thickness	tw=10 mm
St.Venant torsional constant	It=21.67E6 mm⁴
Second moment of area (z-z axis)	Iz=833E6 mm⁴
Distance between flange centroids	df=1060 mm

Determine the effective section properties - EN 1992-1-5, Cl. 4.4

The process is iterative as the amount of web not considered is a function of the stresses at the top and bottom of the web.

Iteration 1:

Gross area of section	A=2*b*tf+hw*tw=50200 mm²
Gross 2nd moment of area	Iy=(b*(hw+2*tf)^3-(b-tw)*hw^3)/12 =12.126E9 mm⁴
Stress at top of web	s1=MyEd*10^6*hw/2/Iy=131.73 N/mm²
Stress at bottom of web	s2=-MyEd*10^6*hw/2/Iy=-131.73 N/mm²

Iteration 10 :
Position of effective centroid:
zeff=(A*h/2-Aw*(zeffp+be2+lw/2))/Aeff=549.48 mm
Effective 2nd moment of area:
Iyeff=Iy+A*(h/2-zeff)^2-tw*lw^3/12-Aw*(zeffp+be2+lw/2-zeff)^2
=12.118E9 mm⁴

Top of web stress	s1(10)=MyEd*10^6*(h-tf-zeff)/Iyeff =131.95 N/mm²
Bottom of web stress	s2(10)=-MyEd*10^6*(zeff-tf)/Iyeff =-131.68 N/mm²
Net loss area	Aw=lw*tw=85.988 mm²
Effective area of section	Aeff=A-Aw=50114 mm²

Effective section modulus Weffy=Iyeff/(1000*(h-zeff))=22011 cm³

Design parameters

Design moment (major axis) MyEd=3132 kNm
Coefficient C1 C1=1
Young's modulus E=210000 N/mm²
Shear modulus G=80768 N/mm²
Yield strength fy=345 N/mm²

Expression for lamLT (λLT)

The clause references in this section are as per Appendix C of SCI P356.
2nd moment of area (comp flange) Izc=416E6 mm⁴
2nd moment of area (tens.flange) Izt=416E6 mm⁴
For buckling over a half wavelength Lw the parameter V is as given by the expression below:

V=((4*a*(1-a)+0.05*lamF^2+psia^2)^0.5+psia)^-0.5=0.70174

Parameter from C.4.5 omega=PI^2*df^2*E*Iz/(G*It*Lw^2)
=1.4137
compute comp1=SQR(4+tee*omega)+psia
*SQR(omega)=2.3267
Parameter from C.4.5 Veq=(2*a*omega/comp1^2)^0.25=0.71485
The restraint parameter is calculated from the following expression as given in SCI publication P356:

$$rp = \left[\frac{Veq^4 * Lw^3}{E * Izc * \theta R * df^2 * (1-a)} \right]$$

Rotation of restraint θR thetaR=27.06E-12 rad/Nmm
Restraint parameter:

rp=Veq^4*Lw^3/(E*Izc*thetaR*df^2*(1-a))=4316.4 rad/Nmm

Longest unbraced length Lr=LT=8200 mm
Plastic section modulus (yy axis) Wply=23.88E6 mm³
Effect.section modulus (yy axis) Weffy=22.011E6 mm³
Beta βw betaw=Weffy/Wply=0.92173
Section property from C.1 U=1
Non-dimensional slenderness λLT:

lamLT=1/(C1)^0.5*U*V*D*lamb*SQR(betaw)=0.87387

Partial factors on strength

Partial factor γM0 gamM0=1.0
Partial factor γM1 gamM1=1.1

Lateral torsional buckling

The the design lateral torsional buckling resistance moment (MbRd) will be calculated. Section under consideration is a welded section and EC3 Part 1-1 Clause 6.3.2.2 expressions will be adopted.
Limiting slenderness value lamLT0=0.2
According to the NA to BS EN 1993-1-1, Tables 6.3 and 6.4 could be used with Clause 6.3.2.2 to determine the imperfection factor αLT.

Imperfection value aLT=0.76 (curve d)
Modified chiLT factor ChiLT=chiLT/f=0.53571
Design buckling resistance moment MbRd=ChiLT*Weffy*fy/(gamM1*10^6)
=3698.2 kNm

Interaction equation for moments

The beam is assumed to be without longitudinal stiffeners. The design resistance for bending about the major axis as per Clause 6.2.5(2) of BS EN 1993-2:2006 is as follows:
Design moment resistance McRd=Weffy*fy/(gamM0*10^6)=7593.8 kNm
As MbRd ≤ McRd (3698.2 kNm ≤ 7593.8 kNm), the lateral torsional buckling resistance will be adopted.
Unity factor unity=MEd/MbRd=0.84689
As MEd ≤ MbRd (3132 kNm ≤ 3698.2 kNm), section chosen is considered to be suitable.

Shear resistance of a web of a beam with transverse stiffeners at supports and with or without intermediate transverse stiffeners

The shear resistance of a web under pure shear will be evaluated. Beam will be stable against shear buckling due to the presence of closely spaced web transverse stiffeners.

Shear-moment interaction

Design shear force (coexisting) VEd=500 kN
The value of parameter eta (η) is as per the NA to BS EN 1993-1-5.
Value of η from Clause 5.1(2) eta=1
Plastic shear resistance VplRd=eta*Aw*fy/(gamM0*SQR(3))/1000
=2031.7 kN
As VEd ≤ 0.5*VplRd, the design shear will not reduce the design resistance moment. Hence OK.

DESIGN SUMMARY	**Design moment**	**3132 kNm**
	Design shear	**500 kN**
	Yield strength of steel	**345 N/mm²**
	Depth of beam	**1100 mm**
	Classification	**Class 4**
	Design buckling resistance	**3698.2 kNm**
	Plastic shear resistance	**2031.7 kN**
	Unity factor	**0.84689 ≤ 1**

Location: Ex1 - Two double-sided bearing stiffeners at support

Bearing stiffeners at end support

The proforma is in accordance with BS EN 1993-2:2006 " EC3 Design of Steel Structures - Part 2:Steel bridges ", the NA to BS EN 1993-2:2006 and BS EN 1993-1-5 section 9.
A rigid end post is assumed in the design which comprise of two double sided transverse stiffeners that form the flanges of a short beam of length hw, as highlighted in BS EN 1993-1-5 Clause 9.3.1(2).

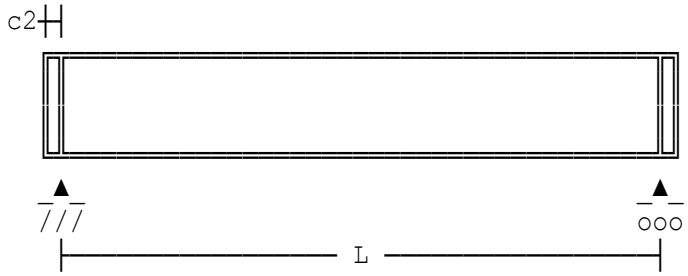

Span of girder	L=12 m
Depth of girder between flanges	hw=1200 mm
Flange thickness	tf=30 mm
Web thickness	tw=12.5 mm
Assumed stiffener thickness	ts=20 mm
Stiffener corner snipe	snp=15 mm

Partial factors for resistance

Partial factor	gamM1=1.1
Partial factor (welds)	gamM2=1.25

Strength of steel

Steel grade	S 355
Yield strength (web)	fyw=355 N/mm²
Yield strength (stiffener)	fys=345 N/mm²
Yield strength to be adopted	fy=345 N/mm²
Design strength of fillet weld	fvwd=fu/(3^0.5*betw*gamM2)=241.2 N/mm²

Check web thickness

Limiting web thick for service tlim=hw/250=4.8 mm
Web thickness exceeds limiting value for serviceability, hence OK.
Limiting web thick flange buckl tlim=(hw/250)*(fy/345)=4.8 mm
Web thickness exceeds limiting value for flange buckling, hence OK.

Bearing stiffeners double sided - BS EN 1993-1-5 section 9

Bearing stiffeners are assumed to be symmetric about the beam web and will be designed as a strut to BS EN 1993-1-5 Clause 9.4(2), resisting the bearing reaction together with any eccentricities.

compute kt from Annex A kt=5.34

Web shear resistance VbRd=chiw*fy*hw*tw/(SQR(3)*gamM1 *1000)=1801.4 kN
Design bearing reaction NbEd=1800 kN

Action as a bearing stiffener

Two double-sided stiffeners at support

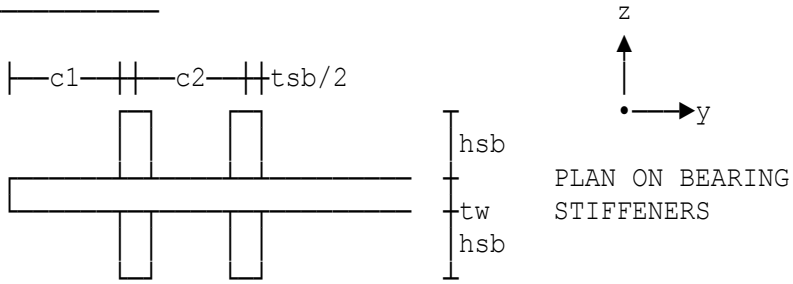

NOTE: Stiffeners to be equally spaced about the centreline of bearing.
Depth of bearing stiffener hsb=150 mm
Thickness of bearing stiffener tsb=20 mm
Distance c1=325 mm
Distance between stiffener CL's c2=300 mm
Eccentricity in each direction ecc=10 mm
Worst stress in web plate:
swp=NbEd*1E3/A+MzEdb*1E6*(15*ew*tw+tsb/2+c2/2)/(Izz) =101.57 N/mm²
Worst stress in stiffener:
compute comp1=NbEd*1E3/A=90.846 N/mm²
compute comp2=MzEdb*1E6*(c2/2+tsb/2)/(Izz) =5.4915 N/mm²
compute comp3=MyEdb*1E6*(hsb+tw/2)/(Iyy) =27.648 N/mm²
Stiffener stress sst=comp1+comp2+comp3=123.99 N/mm²

Limiting outstand to prevent torsional buckling - Clause 9.2.1(8)

Expression 9.3 in EN 1993-1-5 is further simplified by Table 2.6 in " Eurocode 3: Design of steel structures Part 1-5: Design of plated structures " ECCS Eurocode Design Manuals.
Ratio (hsb/tsb) p=hsb/tsb=7.5
Limit to ratio p=(hsb/tsb) is 13ε=10.729.
Ratio (hsb/tsb)=7.5 is not greater than limit 13ε=10.729.
Stiffener complies with Clause 9.2.1(8).

Action as a rigid end post

A rigid end post comprise of two double-sided transverse stiffeners that form the flanges of a short beam of length hw. The effective section below will be taken to exclude the outer parts of web plate.

Two double-sided stiffeners at support

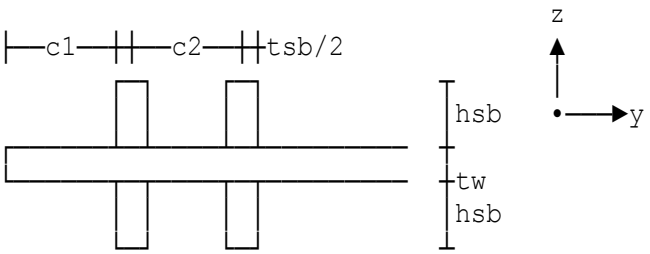

Minimum area Amin=4*hw*tw^2/c2=2500 mm²
Actual area provided Asp=2*hsb*tsb=6000 mm²
As Asp ≥ Amin (6000 mm² ≥ 2500 mm²), stiffener area is adequate.
In-plane moment MzEdm=NH*hw/(8*1E3)=147.33 kNm
End post 2nd moment of area Izze=2*(Asp*(c2/2)^2)=270E6 mm⁴
Worst stiffener stress from membrane action will be calculated below.
Stress due to membrane action sstm=MzEdm*1E6/(Izze/(c2/2+tsb/2))
=87.307 N/mm²

Cross-section resistance check

The maximum stresses from membrane action and bearing reaction will be added together here for simplicity, even though they occur at different heights on the stiffener.
Total stress sstT=sst+sstm=211.29 N/mm²
As sstT ≤ fy (211.29 N/mm² ≤ 345 mm²), stiffener is OK.

Buckling check under combined bending and axial load

The stiffener will be checked for buckling under combined bending and axial load in accordance with BS EN 1993-1-1, Clause 6.3.3.
Critical load Ncry=PI^2*E*Iyy/(Lcry^2*1000)
=146415 kN
Slenderness of the stiffener lamb=(A*fy/(Ncry*1E3))^0.5=0.21607
Design axial load resistance NplRd=A*fy/(gamM1*1000)=6214.3 kN
Design moment resistance yy axis MyRd=Wely*fy/(gamM1*1E6)=204.19 kNm
Design moment resistance zz axis MzRdb=Welzb*fy/(gamM1*1E6)
=1028 kNm (bearing)
Design moment resistance zz axis MzRdm=Welzm*fy/(gamM1*1E6)
=529.26 kNm (membrane)
Interaction equation:

Uni=NEd/(chiy*NplRd)+ratio*(MyEd/MyRd)+(MzEdb/MzRdb+MzEdm/MzRdm)
=0.67717

As Uni ≤ 1.0 (0.67717 ≤ 1.0), the interaction equation is OK.

Connection of stiffeners to girder web

Net stiffener length Lsn=hw-2*snp=1170 mm
Assumed weld size ss'=6 mm
Effective length of weld Lw=8*(Lsn-2*ss')=9264 mm
Design load on weld FwEd=NbEd*10^3/Lw=194.3 N/mm
Design weld resistance FwRd=0.7*ss'*fvwd=1013.1 N/mm

DESIGN SUMMARY

Span of plate girder **L=12 m**
All steel to be **Grade S 355**

End stiffeners:

Posts 1 & 2 are double-sided stiffeners at end of girder.

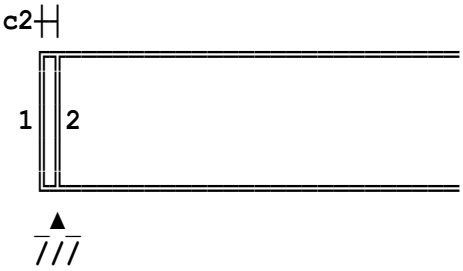

c2=300 mm

Double-sided stiffeners: post 1 2No/150 mm x 20 mm flats
post 2 2No/150 mm x 20 mm flats

Note: All welds to be 6 mm FW of design strength of 241 N/mm².
Assume rigid end posts to BS EN 1993-1-5, Fig 5.1 & Table 5.1.

Location: Ex2 - Two double-sided bearing stiffeners at support

Bearing stiffeners at end support

The proforma is in accordance with BS EN 1993-2:2006 " EC3 Design of Steel Structures - Part 2:Steel bridges ", the NA to BS EN 1993-2:2006 and BS EN 1993-1-5 section 9.
A rigid end post is assumed in the design which comprise of two double sided transverse stiffeners that form the flanges of a short beam of length hw, as highlighted in BS EN 1993-1-5 Clause 9.3.1(2).

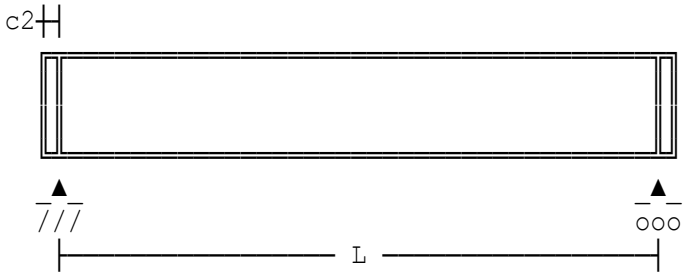

Span of girder	L=20 m
Depth of girder between flanges	hw=1950 mm
Flange thickness	tf=30 mm
Web thickness	tw=18 mm
Assumed stiffener thickness	ts=20 mm
Stiffener corner snipe	snp=15 mm

Partial factors for resistance

Partial factor	gamM1=1.1
Partial factor (welds)	gamM2=1.25

Strength of steel

Steel grade	S 275
Yield strength (web)	fyw=265 N/mm²
Yield strength (stiffener)	fys=265 N/mm²
Yield strength to be adopted	fy=265 N/mm²
Design strength of fillet weld	fvwd=fu/(3^0.5*betw*gamM2)

=222.79 N/mm²

Check web thickness

Stiffener spacing of first panel	ae=1500 mm
Intermediate stiffener spacing	ai=3000 mm
Limiting web thick for service	tlim=hw/250=7.8 mm

Web thickness exceeds limiting value for serviceability, hence OK.

Limiting web thick flange buckl	tlim=(hw/250)*(fy/345)=5.9913 mm

Web thickness exceeds limiting value for flange buckling, hence OK.

Bearing stiffeners double sided - BS EN 1993-1-5 section 9

Bearing stiffeners are assumed to be symmetric about the beam web and will be designed as a strut to BS EN 1993-1-5 Clause 9.4(2), resisting the bearing reaction together with any eccentricities.

compute kt from Annex A kt=4+5.34*(hw/a)^2+ktsl=13.025
Web shear resistance VbRd=chiw*fy*hw*tw/(SQR(3)*gamM1 *1000)=4754.2 kN
Design bearing reaction NbEd=3590 kN

Action as a bearing stiffener

Two double-sided stiffeners at support

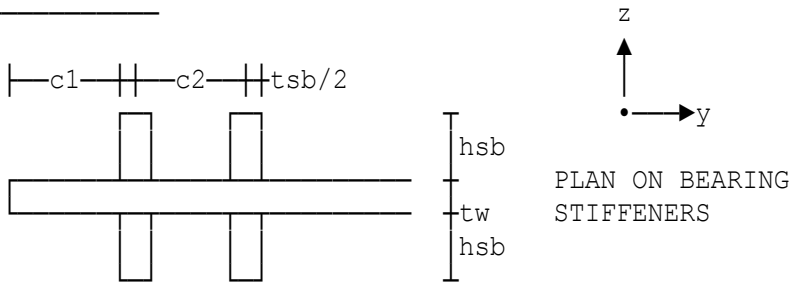

NOTE: Stiffeners to be equally spaced about the centreline of bearing.
Depth of bearing stiffener hsb=225 mm
Thickness of bearing stiffener tsb=20 mm
Distance c1=0 mm
Distance between stiffener CL's c2=300 mm
Eccentricity in each direction ecc=10 mm
Worst stress in web plate:
swp=NbEd*1E3/A+MzEdb*1E6*(15*ew*tw+tsb/2+c2/2)/(Izz) =148.27 N/mm²
Worst stress in stiffener:
compute comp1=NbEd*1E3/A=126.69 N/mm²
compute comp2=MzEdb*1E6*(c2/2+tsb/2)/(Izz) =8.336 N/mm²
compute comp3=MyEdb*1E6*(hsb+tw/2)/(Iyy) =24.586 N/mm²
Stiffener stress sst=comp1+comp2+comp3=159.61 N/mm²

Limiting outstand to prevent torsional buckling - Clause 9.2.1(8)

Expression 9.3 in EN 1993-1-5 is further simplified by Table 2.6 in " Eurocode 3: Design of steel structures Part 1-5: Design of plated structures " ECCS Eurocode Design Manuals.
Ratio (hsb/tsb) p=hsb/tsb=11.25
Limit to ratio p=(hsb/tsb) is 13ε=12.242.
Ratio (hsb/tsb)=11.25 is not greater than limit 13ε=12.242.
Stiffener complies with Clause 9.2.1(8).

Action as a rigid end post

A rigid end post comprise of two double-sided transverse stiffeners that form the flanges of a short beam of length hw. The effective section below will be taken to exclude the outer parts of web plate.

Two double-sided stiffeners at support

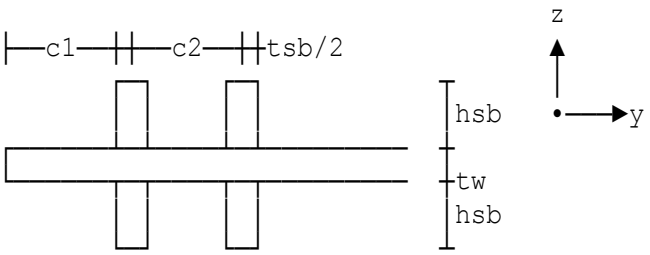

Minimum area Amin=4*hw*tw^2/c2=8424 mm²
Actual area provided Asp=2*hsb*tsb=9000 mm²
As Asp ≥ Amin (9000 mm² ≥ 8424 mm²), stiffener area is adequate.
In-plane moment MzEdm=NH*hw/(8*1E3)=0 kNm
End post 2nd moment of area Izze=2*(Asp*(c2/2)^2)=405E6 mm⁴
Worst stiffener stress from membrane action will be calculated below.
Stress due to membrane action sstm=MzEdm*1E6/(Izze/(c2/2+tsb/2))
=0 N/mm²

Cross-section resistance check

The maximum stresses from membrane action and bearing reaction will be added together here for simplicity, even though they occur at different heights on the stiffener.
Total stress sstT=sst+sstm=159.61 N/mm²
As sstT ≤ fy (159.61 N/mm² ≤ 265 mm²), stiffener is OK.

Buckling check under combined bending and axial load

The stiffener will be checked for buckling under combined bending and axial load in accordance with BS EN 1993-1-1, Clause 6.3.3.
Critical load Ncry=PI^2*E*Iyy/(Lcry^2*1000)
=186237 kN
Slenderness of the stiffener lamb=(A*fy/(Ncry*1E3))^0.5=0.2008
Design axial load resistance NplRd=A*fy/(gamM1*1000)=6826.6 kN
Design moment resistance yy axis MyRd=Wely*fy/(gamM1*1E6)=351.77 kNm
Design moment resistance zz axis MzRdb=Welzb*fy/(gamM1*1E6)
=1037.5 kNm (bearing)
Design moment resistance zz axis MzRdm=Welzm*fy/(gamM1*1E6)
=609.8 kNm (membrane)
Interaction equation:

Uni=NEd/(chiy*NplRd)+ratio*(MyEd/MyRd)+(MzEdb/MzRdb+MzEdm/MzRdm)
=0.66477

As Uni ≤ 1.0 (0.66477 ≤ 1.0), the interaction equation is OK.

Connection of stiffeners to girder web

Net stiffener length Lsn=hw-2*snp=1920 mm
Assumed weld size ss'=6 mm
Effective length of weld Lw=8*(Lsn-2*ss')=15264 mm
Design load on weld FwEd=NbEd*10^3/Lw=235.19 N/mm
Design weld resistance FwRd=0.7*ss'*fvwd=935.71 N/mm

DESIGN SUMMARY

Span of plate girder **L=20 m**
All steel to be **Grade S 275**

End stiffeners:

Posts 1 & 2 are double-sided stiffeners at end of girder.

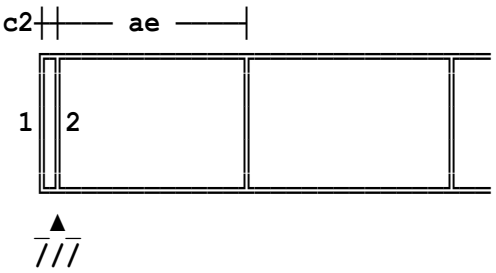

c2=300 mm
ae=1500 mm

Double-sided stiffeners: post 1 2No/225 mm x 20 mm flats
post 2 2No/225 mm x 20 mm flats

Note: All welds to be 6 mm FW of design strength of 222 N/mm².
Assume rigid end posts to BS EN 1993-1-5, Fig 5.1 & Table 5.1.

Location: Ex3 - Single double-sided bearing stiffener at support

Bearing stiffeners at end support

The proforma is in accordance with BS EN 1993-2:2006 " EC3 Design of Steel Structures - Part 2:Steel bridges ", the NA to BS EN 1993-2:2006 and BS EN 1993-1-5 section 9.
A non-rigid end post is assumed in the design which comprise of a single double sided transverse stiffener of length hw, as highlighted in BS EN 1993-1-5 Clause 9.3.1(2).

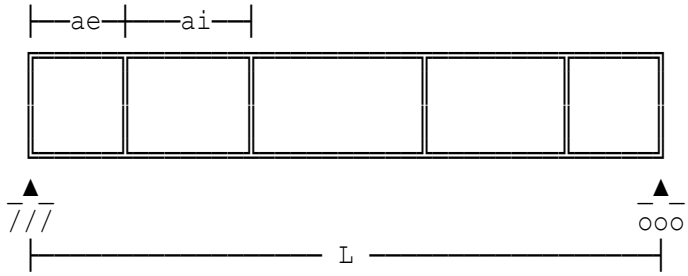

Span of girder	L=12 m
Depth of girder between flanges	hw=1200 mm
Flange thickness	tf=30 mm
Web thickness	tw=12.5 mm
Assumed stiffener thickness	ts=20 mm
Design bearing reaction	NbEd=1825 kN
Stiffener corner snipe	snp=15 mm

Partial factors for resistance

Partial factor	gamM1=1.1
Partial factor (welds)	gamM2=1.25

Strength of steel

Steel grade	S 355
Yield strength (web)	fyw=355 N/mm²
Yield strength (stiffener)	fys=345 N/mm²
Yield strength to be adopted	fy=345 N/mm²
Design strength of fillet weld	fvwd=fu/(3^0.5*betw*gamM2)=241.2 N/mm²

Check web thickness

Stiffener spacing of first panel	ae=1500 mm
Intermediate stiffener spacing	ai=3000 mm
Limiting web thick for service	tlim=hw/250=4.8 mm

Web thickness exceeds limiting value for serviceability, hence OK.

Limiting web thick flange buckl	tlim=(hw/250)*(fy/345)=4.8 mm

Web thickness exceeds limiting value for flange buckling, hence OK.

Bearing stiffener (double sided non-rigid end post)

It is assumed that the support reaction acts at the centroid of the effective stiffener section, such that there is no bending moment induced. Bearing stiffener consists a single double-sided stiffener. The stiffener effective cross section is as shown below:

One double-sided stiffener at support

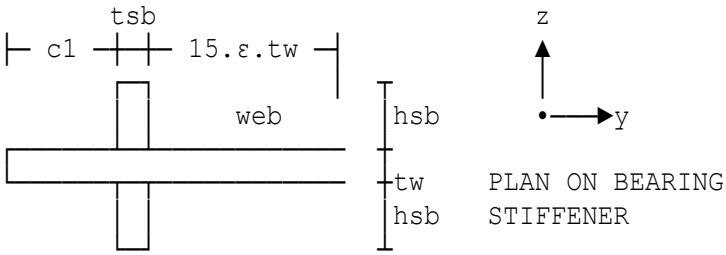

Depth of bearing stiffener hsb=150 mm
Thickness of bearing stiffener tsb=20 mm
Distance c1=300 mm
Design buckling resistance NbRd=chi*Ast*fysb/(gamM1*1000)
=3156.4 kN

As NbEd ≤ NbRd (1825 kN ≤ 3156.4 kN), the design bearing reaction at the support is less than the design buckling resistance. Hence satisfactory.

Limiting outstand to prevent torsional buckling - Clause 9.2.1(8)

Expression 9.3 in EN 1993-1-5 is further simplified by Table 2.6 in " Eurocode 3: Design of steel structures Part 1-5: Design of plated structures " ECCS Eurocode Design Manuals.
Ratio (hsb/tsb) p=hsb/tsb=7.5
Limit to ratio p=(hsb/tsb) is 13ε=10.729.
Ratio (hsb/tsb)=7.5 is not greater than limit 13ε=10.729.
Stiffener complies with Clause 9.2.1(8).

Connection of stiffeners to girder web

Net stiffener length Lsn=hw-2*snp=1170 mm
Assumed weld size ss'=6 mm
Effective length of weld Lw=4*(Lsn-2*ss')=4632 mm
Design load on weld FwEd=NbEd*10^3/Lw=394 N/mm
Design weld resistance FwRd=0.7*ss'*fvwd=1013.1 N/mm

Plastic shear resistance - Clause 6.2.5

Shear area Avz=hw*tw=15000 mm²
Plastic shear resistance of web VplRd=Avz*fy/SQR(3)/(gamM0*1000)
=2987.8 kN

Shear buckling resistance - EN 1993-1-1, Clause 6.2.6(6)

As hw/tw > 72*ew (96 > 58.58), the web shear buckling resistance needs to be checked (EN 1993-1-5 Clause 5.2 and 5.3).
Buckling coefficient (Annex A) kt=5.34+4*(hw/a)^2=7.9

Modified slenderness λ lamw=hw/(37.4*tw*ew*SQR(kt))=1.1224
Shear resistance of web VplRd=2987.8 kN
Reduced design shear resistance at support (web contribution only will be considered):
VbwRd=chiw*fyw*hw*tw/(3^0.5*gamM1*1000)=2066.7 kN

Design shear at support VEd(0)=NbEd=1825 kN
As VEd(0) ≤ VbwRd (1825 kN ≤ 2066.7 kN), the shear force is less than the shear resistance. Hence section OK.

DESIGN SUMMARY

Span of plate girder L=12 m
All steel to be Grade S 355

End stiffener :

Posts 1 is a single double-sided stiffener at the end of girder.

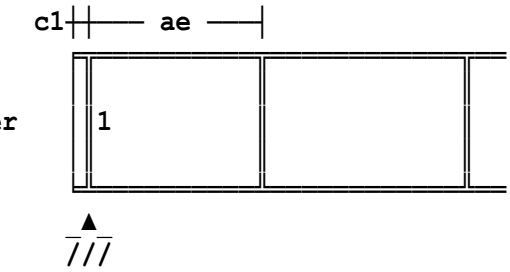

c1=300 mm
ae=1500 mm

Double-sided stiffeners: post 1 1No/150 mm x 20 mm flats

Note: All welds to be 6 mm FW of design strength of 241 N/mm².
Assume non-rigid end posts to BS EN 1993-1-5, Fig 5.1 & Table 5.1.
Interaction between shear force, bending moment and axial force needs to be considered as the actual shear force exceeds VbwRd/2.
This is check is beyond the scope of this proforma.

Location: Ex1 - Stiffener A

Transverse web stiffeners (Clause 9.13)

The calculations are in accordance with BS 5400:Part 3:2000 "Code of Practice for Design of Steel Bridges" as implemented by Departmental Standard BD 13/06.

The proforma is for transverse web stiffeners other than at supports for webs without longitudinal stiffeners (Clause 9.13).

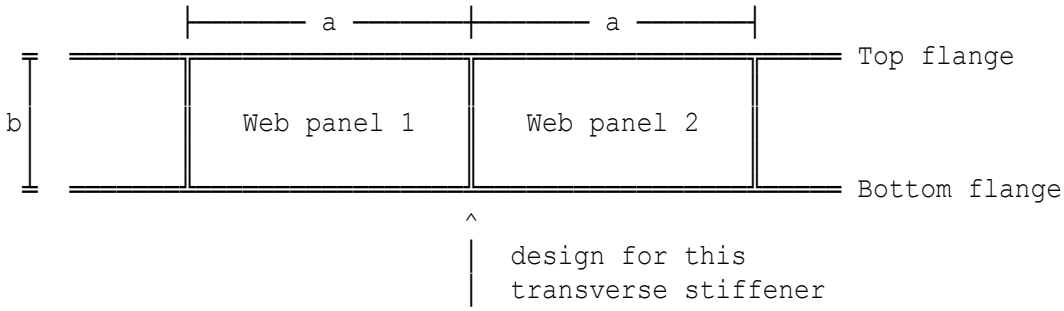

Elevation on web without longitudinal stiffening

Panel length 1 a(1)=2300 mm
Panel width b=2274 mm
Web panels 1 and 2.
Longitudinal stresses in web calculated without any redistribution to the flanges.

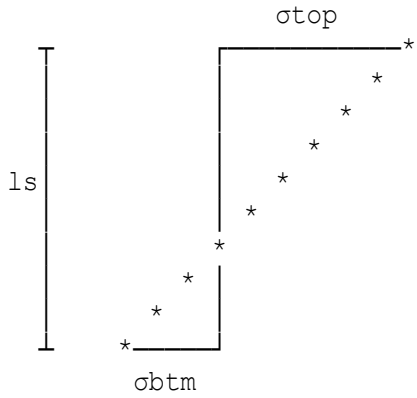

Longitudinal stresses in web with transverse stiffeners

ls=2274 mm

Compression stresses are positive.

Stress at top of web plate σtop stp(1)=73 N/mm²
Stress at btm of web plate σbtm sbm(1)=-57 N/mm²

Axial force due to tension field action (Clause 9.13.3.2)

Depth dw for panels dw(1)=2274 mm
Height of any hole hh(1)=0 mm
Shear force acting on panels V(1)=1450 kN
Force due to tension field action Ftw=Ftw(1)=893.18 kN

Axial force representing the destabilizing influence of the web

```
     bwe    bwe
  |<——>|<——>|
   web   ||
  ═══════╬═══
X  - -   ||  - -  X
         ||
         ^
         └─ centreline of stiffener connection
```

The effective stiffener section should comprise the stiffener section with a portion of web plate of width bwe on each side of the stiffener connection centreline taken as the lesser of:

16 times the web thickness =176 mm
Half the web panel length =2300 mm

Geometric properties of effective stiffener section

Second moment of area about centroidal X-X axis.
Second moment of area Ixx=38.512E6 mm⁴
Cross-sectional area Ast=10280 mm²
Nominal yield stress of stiffener sys=345 N/mm²
Nominal yield stress of web syw=345 N/mm²
Axial compressive force representing destabilising influence of web assumed to act along the centroidal axis of the stiffener.
Force Fwi1=ls*ls*tw*ks*sigR/(a(3)*1000)
=137.98 kN

Strength of transverse web stiffeners (Clause 9.13.5)

Section 1 :

Yielding of web plate (Clause 9.13.5.1)

```
     Side 1
  ┌──────────┐
  │ Web      │
  │          │
  │          │
X - - - -    - - - - X
  │          │
  │          │
     Side 2
```

Stiffener outstand

dxw

```
Side 1
  ═══╬═══
X - -  ||  - -  X
       ||
Side 2
```

dxw

dxw positive

```
Side 1
X - -  ||  - -  X
       ||
  ═══╬═══
Side 2
```

dxw

dxw negative

Geometric properties of effective stiffener section

Distance from:
Force in stiffener Fts(1)=0 kN
Applied moment about X-X axis Mt(1)=0 kNm

Dimension ys ys(1)=1137 mm

Partial factor on yield strength gmc=1.05
Partial factor gammaf3 gf3=1.1
Equivalent compressive stress in web 175.32 N/mm² does not exceed limiting stress 298.7 N/mm².
Web plate satisfactory for yielding.

Yielding of stiffener (Clause 9.13.5.2)

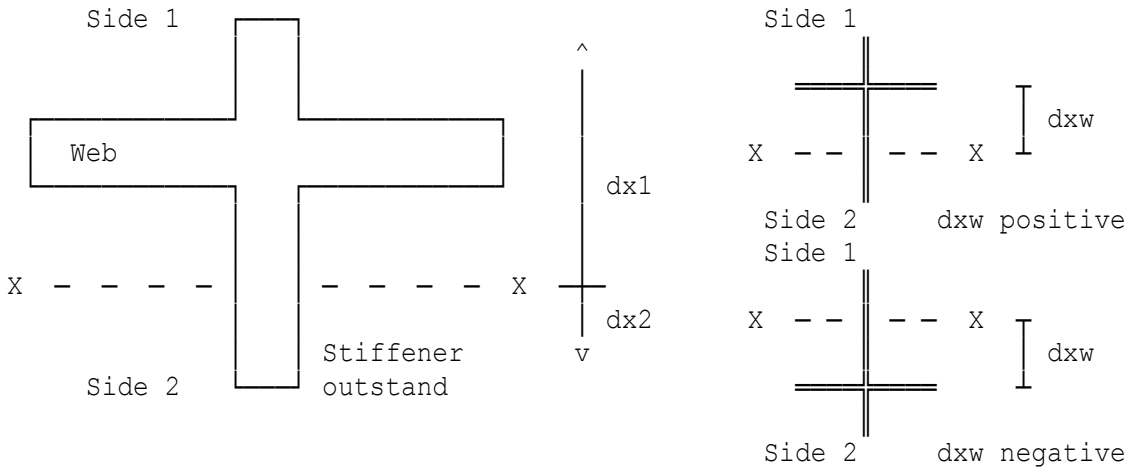

Geometric properties of effective stiffener section

Distance from X-X axis to section at which stress is calculated:
X-X axis to section on Side 1 dx1(q)=64.41 mm
X-X axis to section on Side 2 dx2(q)=124.59 mm
X-X axis to centre of web dxw(q)=58.91 mm
Second moment of area (X-X axis) Ix(q)=38.512E6 mm⁴
Cross-sectional area A(q)=10280 mm²
Force in stiffener Fts(1)=0 kN
Applied moment about X-X axis Mt(1)=0 kNm

Transverse stresses in stiffener:
Stress σes
Side 1 se3(1)=(F(q)/A(q))*1000+(M(q)*dx1(q)/Ix(q))*1E6=174.89 N/mm²
Side 2 se4(1)=(F(q)/A(q))*1000-(M(q)*dx2(q)/Ix(q))*1E6
=-83.337 N/mm²

Partial factor on yield strength gmc=1.05
Partial factor gammaf3 gf3=1.1
Compressive transverse stress in stiffener 174.89 N/mm² does not exceed limiting stress 298.7 N/mm².
Stiffener satisfactory for yielding.

Buckling of effective stiffener section (Clause 9.13.5.3)

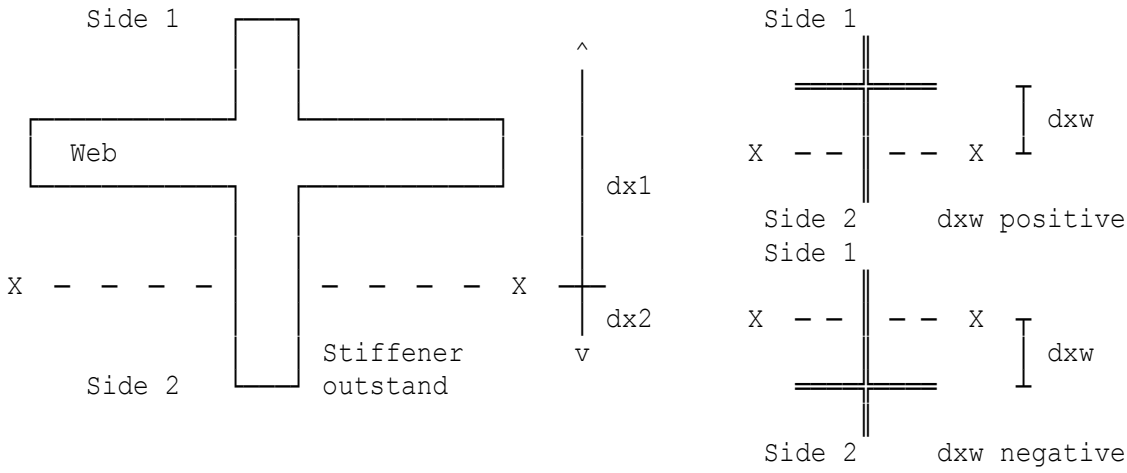

Geometric properties of effective stiffener section

Distance from X-X axis to section at which stress is calculated:

X-X axis to section on Side 1	dx1(q)=64.41 mm
X-X axis to section on Side 2	dx2(q)=124.59 mm
X-X axis to centre of web	dxw(q)=58.91 mm
Second moment of area (X-X axis)	Ix(q)=38.512E6 mm^4
Cross-sectional area	A(q)=10280 mm^2
Force from tension field action	Ftw(1)=Ftw=893.18 kN
Force from destabilizing effects	Fwi(1)=Fwi=137.98 kN
Force in stiffener	Fts(1)=0 kN
Applied moment about X-X axis	Mt(1)=0 kNm

Inequality for buckling:

Factor Side 1 v1(1)=F(q)*1E3/(A(q)*sigls)+M(q)*1E6/(Zx1(q)*sys)=0.61045

Factor Side 2 v2(1)=F(q)*1E3/(A(q)*sigls)-M(q)*1E6/(Zx2(q)*sys)
=-0.13802

Partial factor on yield strength	gmbc=1.2
Partial factor gammaf3	gf3=1.1
Factor 1/(gammac*gammaf3)	w=1/(gmbc*gf3)=0.75758

Hence critical factor for Side 1 0.61045

Left hand side of inequality 0.61045 is not greater than right hand side 0.75758. Hence stiffener section is OK for buckling.

Location: Ex2 - Stiffener A

Transverse web stiffeners (Clause 9.13)

The calculations are in accordance with BS 5400:Part 3:2000 "Code of Practice for Design of Steel Bridges" as implemented by Departmental Standard BD 13/06.

The proforma is for transverse web stiffeners other than at supports for webs without longitudinal stiffeners (Clause 9.13).

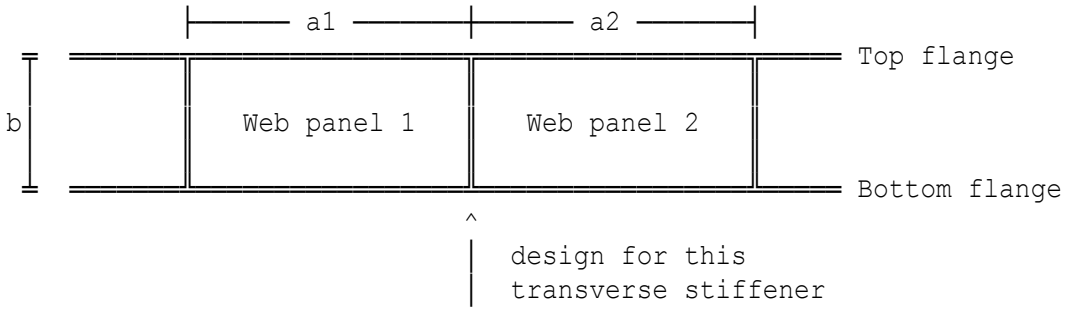

Elevation on web without longitudinal stiffening

Panel length 1	a(1)=2300 mm
Panel length 2	a(2)=2000 mm
Panel width	b=2274 mm
Length of stiffener	ls=2274 mm
Thickness of web	tw=12 mm
Modulus of elasticity of web	E=205000 N/mm²

Web panel 1 :
Longitudinal stresses in web calculated without any redistribution to the flanges.

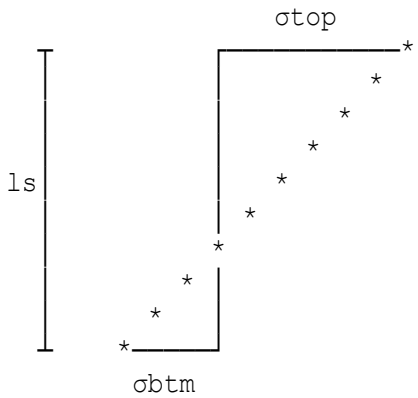

Longitudinal stresses in web with transverse stiffeners

ls=2274 mm

Compression stresses are positive.

Stress at top of web plate σtop	stp(1)=80 N/mm²
Stress at btm of web plate σbtm	sbm(1)=-60 N/mm²

Axial force due to tension field action (Clause 9.13.3.2)

Depth dw for panel 1 dw(1)=2274 mm
Height of any hole hh(1)=0 mm
Shear force acting on panel V(1)=1500 kN
Web panel 2 :
Stress at top of web plate σtop stp(2)=90 N/mm²
Stress at btm of web plate σbtm sbm(2)=-70 N/mm²

Axial force due to tension field action (Clause 9.13.3.2)

Depth dw for panel 2 dw(2)=2274 mm
Height of any hole hh(2)=0 mm
Shear force acting on panel V(2)=1200 kN
Force due to tension field action taken as average value from two panels
Force due to tension field action Ftw=(Ftw(1)+Ftw(2))/2=572.99 kN

Axial force representing the destabilizing influence of the web

```
     bwe    bwe
  |<——>|<——>|
   web   ||
 ========||========
X  - -   ||  - -  X
         ||
         ^
         └ centreline of stiffener connection
```

The effective stiffener section should comprise the stiffener section with a portion of web plate of width bwe on each side of the stiffener connection centreline taken as the lesser of:

16 times the web thickness =192 mm
Half the web panel length =2150 mm

Geometric properties of effective stiffener section

Second moment of area about centroidal X-X axis.
Second moment of area Ixx=40E6 mm⁴
Cross-sectional area Ast=9760 mm²
Nominal yield stress of stiffener sys=345 N/mm²
Nominal yield stress of web syw=345 N/mm²
Axial compressive force representing destabilising influence of web assumed to act along the centroidal axis of the stiffener.
Force Fwi1=ls*ls*tw*ks*sigR/(a(3)*1000)
=172.95 kN
Reduced force Fwi1=Fwi1*ns1=172.12 kN
Axial compressive force representing destabilising influence of web assumed to act along the centroidal axis of the stiffener.
Force Fwi2=ls*ls*tw*ks*sigR/(a(3)*1000)
=86.475 kN
Reduced force Fwi2=Fwi2*ns2=86.422 kN

Strength of transverse web stiffeners (Clause 9.13.5)

Section 1 :

Yielding of web plate (Clause 9.13.5.1)

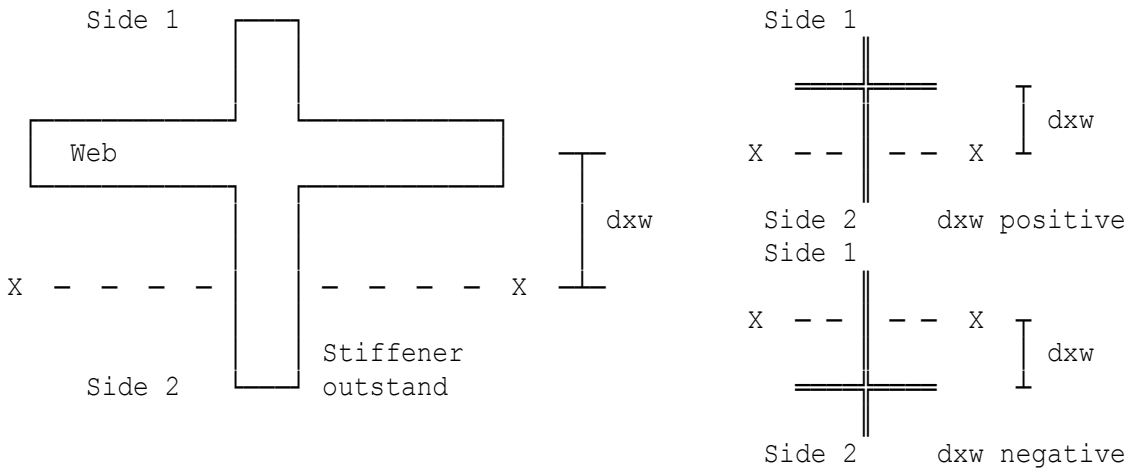

Geometric properties of effective stiffener section

Distance from:
Force in stiffener Fts(1)=80 kN
Applied moment about X-X axis Mt(1)=20 kNm

Dimension ys ys(1)=1137 mm

Equivalent long. stress τR tauR=25.573 N/mm²
Partial factor on yield strength gmc=1.05
Partial factor gammaf3 gf3=1.1
Equivalent compressive stress in web 158.2 N/mm² does not exceed limiting stress 298.7 N/mm².
Web plate satisfactory for yielding.

Yielding of stiffener (Clause 9.13.5.2)

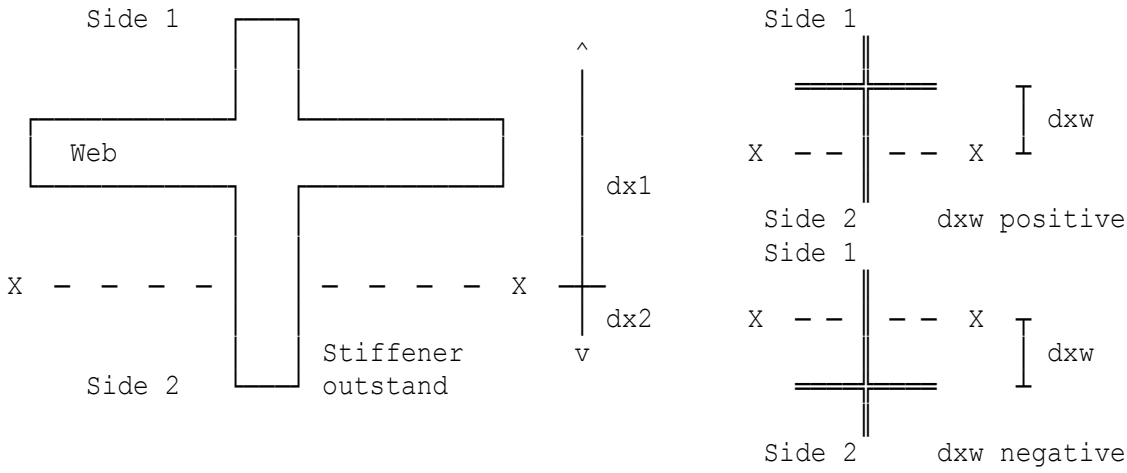

Geometric properties of effective stiffener section

Distance from X-X axis to section at which stress is calculated:

X-X axis to section on Side 1	dx1(q)=60 mm
X-X axis to section on Side 2	dx2(q)=100 mm
X-X axis to centre of web	dxw(q)=60 mm
Second moment of area (X-X axis)	Ix(q)=40E6 mm⁴
Cross-sectional area	A(q)=9760 mm²
Force in stiffener	Fts(1)=80 kN
Applied moment about X-X axis	Mt(1)=20 kNm

Transverse stresses in stiffener:
Stress σes
Side 1 se3(1)=(F(q)/A(q))*1000+(M(q)*dx1(q)/Ix(q))*1E6=148.47 N/mm²
Side 2 se4(1)=(F(q)/A(q))*1000-(M(q)*dx2(q)/Ix(q))*1E6
=-69.044 N/mm²

Partial factor on yield strength gmc=1.05
Partial factor gammaf3 gf3=1.1
Compressive transverse stress in stiffener 148.47 N/mm² does not exceed limiting stress 298.7 N/mm².
Stiffener satisfactory for yielding.

Buckling of effective stiffener section (Clause 9.13.5.3)

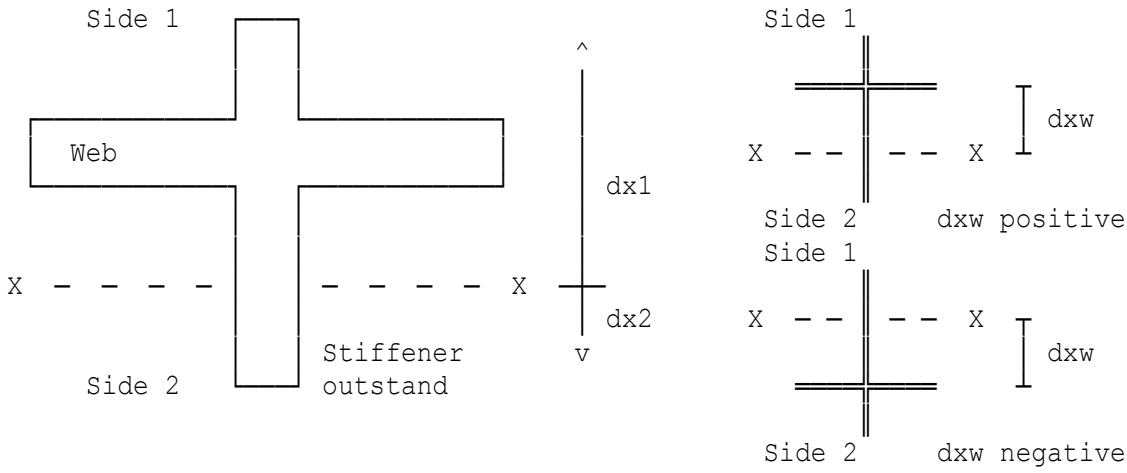

Geometric properties of effective stiffener section

Distance from X-X axis to section at which stress is calculated:

X-X axis to section on Side 1	dx1(q)=60 mm
X-X axis to section on Side 2	dx2(q)=100 mm
X-X axis to centre of web	dxw(q)=60 mm
Second moment of area (X-X axis)	Ix(q)=40E6 mm⁴
Cross-sectional area	A(q)=9760 mm²
Force from tension field action	Ftw(1)=Ftw=572.99 kN
Force from destabilizing effects	Fwi(1)=Fwi=172.12 kN
Force in stiffener	Fts(1)=80 kN
Applied moment about X-X axis	Mt(1)=20 kNm

Inequality for buckling:
Factor Side 1 v1(1)=F(q)*1E3/(A(q)*sigls)+M(q)*1E6/(Zx1(q)*sys)=0.53106
Factor Side 2 v2(1)=F(q)*1E3/(A(q)*sigls)-M(q)*1E6/(Zx2(q)*sys)
=-0.099428

Partial factor on yield strength	gmbc=1.2
Partial factor gammaf3	gf3=1.1
Factor 1/(gammac*gammaf3)	w=1/(gmbc*gf3)=0.75758

Hence critical factor for Side 1 0.53106
Left hand side of inequality 0.53106 is not greater than right hand side 0.75758. Hence stiffener section is OK for buckling.

Location: Ex1 - Transverse web stiffener

Transverse web stiffeners (BS EN 1993-1-5 section 9)

The proforma is in accordance with BS EN 1993-2:2006 "Eurocode 3 Design of Steel Structures - Part 2: Steel bridges" and the NA to BS EN 1993-2:2006.

The proforma is for transverse web stiffeners other than at supports for webs without longitudinal stiffeners. No rules are given within BS EN 1993-2:2006 for the design of intermediate transverse stiffeners so reference has to be made to BS EN 1993-1-5 section 9.

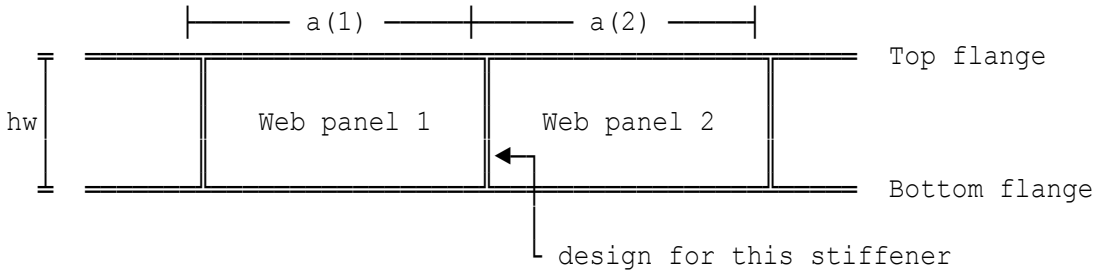

Elevation on web without longitudinal stiffening

Panel length 1	a(1)=4000 mm
Panel width	hw=1200 mm
Length of stiffener	ls=1200 mm
Thickness of web	tw=12 mm
Modulus of elasticity of web	E=210000 N/mm²
Stiffener corner snipe	snp=15 mm

Web panels 1 & 2:

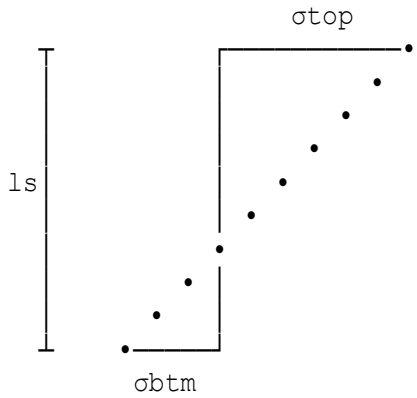

Longitudinal stresses in web with transverse stiffeners

Panel length =4000 mm
ls=1200 mm

Compression stresses are positive

Stress at top of web plate (σtop) stop=200 N/mm²
Stress at btm of web plate (σbtm) sbtm=-200 N/mm²

Design parameters

Depth of stiffener hs=150 mm
Stiffener thickness ts=15 mm
Yield strength (web) fyw=355 N/mm²
Yield strength (stiffener) fys=355 N/mm²

Limiting outstand to prevent torsional buckling - Clause 9.2.1(8)

Expression 9.3 in EN 1993-1-5 is further simplified by Table 2.6 in " Eurocode 3: Design of steel structures Part 1-5: Design of plated structures " ECCS Eurocode Design Manuals.
Yield strength to be adopted fy=355 N/mm²
Strain value ε (EC3 Part 1-1) ew=SQR(235/fyw)=0.81362
Strain value ε (EC3 Part 1-1) es=SQR(235/fys)=0.81362
Ratio (hs/ts) p=hs/ts=10
Limit to ratio p=(hs/ts) is 13ε=10.577.
Ratio (hs/ts)=10 is not greater than limit 13ε=10.577.
Stiffener complies with Clause 9.2.1(8).

Design shear resistance (single-sided transverse stiffener)

The effective cross section of the intermediate single-sided transverse stiffener is as shown below:

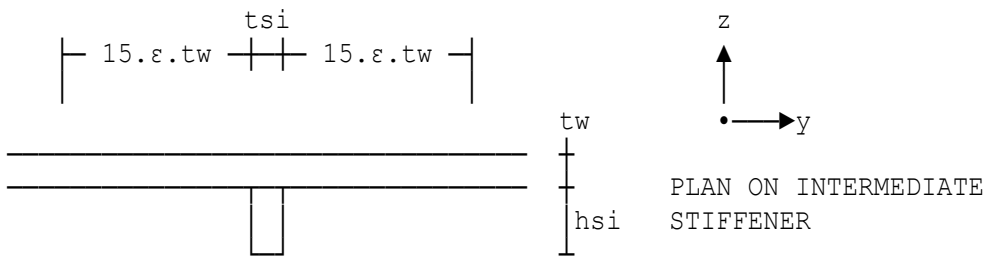

2nd moment of area yy axis Iyy=Ipro=13.438E6 mm⁴
Design shear resistance VbRd=chi*Ae*fyw/(gamM1*1000)=1871.9 kN

Axial force in the stiffener due to shear - BS EN 1993-1-5

Shear buckling coefficient for web panel kt is derived from Clause 5.2.
Buckling coefficient (Annex A) kt=5.34+4*(hw/a)^2=5.7
Modified slenderness λw lamw=0.76*(fy/tcr)^0.5=1.3767
Max design shear force in panel VEd1=1700 kN
Externally applied design load Pext1=0 kN

Option 1:
Longitudinal compressive stress σxEd=0 for symmetrical sections.
Vertical force generated in stiffener arising from the shear induced tension field (see older version of NA to BS EN 1993-1-5:2006):
PEd1'=VEd1-hw*tw*0.8*tcr/1000=453.7 kN

Option 2:
Vertical force generated in the stiffener as per BS EN 1993-1-5 (see NOTE, Clause 9.3.3(3)):
PEd1=VEd1-fyw*hw*tw/(SQR(3)*gamM1*lamw^2*1000)=284.36 kN

Generated force to be adopted PEd1=453.7 kN
Design axial load in stiffener PEd=PEd1+Pext1=453.7 kN
As PEd ≤ VbRd (453.7 kN ≤ 1871.9 kN), the design shear force does not exceed the shear resistance. Hence OK.

Connection to the web

Design shear load on weld FwEd=tw^2/(5*hs)+PEd/(hw-2*snp)
=0.57978 kN/mm
Weld size required sww=FwEd*10^3/(2*0.7*fvwd)=1.7169 mm
Weld size provided sw1=6 mm

Stiffness check - Clause 9.3.3(3)

2nd moment of area (effe.section) Ipro=13.438E6 mm^4
2nd moment of area required Ireq=0.75*hw*tw^3=1.5552E6 mm^4
As Ireq ≤ Ipro (1.5552E6 mm^4 ≤ 13.438E6 mm^4), the stiffener is OK.

DESIGN SUMMARY	**Panel length**	**4000 mm**
	Panel width	**1200 mm**
	Beam web thickness	**12 mm**
	Depth of stiffener	**150 mm**
	Stiffener thickness	**15 mm**
	Design shear force	**1700 kN**
	Axial load in stiffener	**453.7 kN**
	Design shear resistance	**1871.9 kN**
INTERMEDIATE STIFFENER	**Load carrying stiffener**	
	1No/150 mm x 15 mm flats	
	Grade S 355 steel	
	connected by 2/6 mm FW	

Location: Ex2 - Transverse web stiffener

Transverse web stiffeners (BS EN 1993-1-5 section 9)

The proforma is in accordance with BS EN 1993-2:2006 "Eurocode 3 Design of Steel Structures - Part 2: Steel bridges" and the NA to BS EN 1993-2:2006.

The proforma is for transverse web stiffeners other than at supports for webs without longitudinal stiffeners. No rules are given within BS EN 1993-2:2006 for the design of intermediate transverse stiffeners so reference has to be made to BS EN 1993-1-5 section 9.

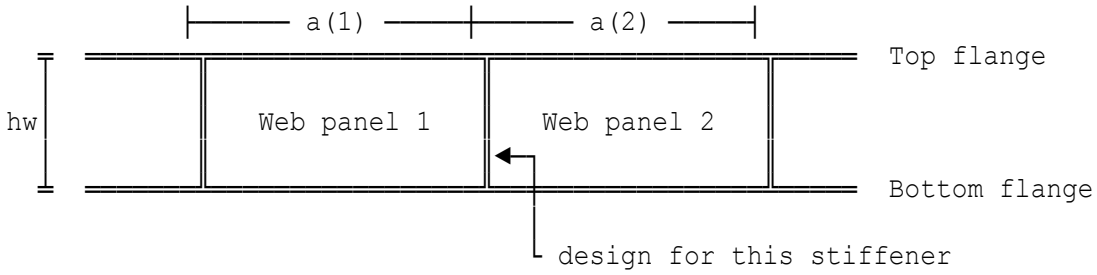

Elevation on web without longitudinal stiffening

Panel length 1	a(1)=4000 mm
Panel width	hw=1200 mm
Length of stiffener	ls=1200 mm
Thickness of web	tw=12 mm
Modulus of elasticity of web	E=210000 N/mm²
Stiffener corner snipe	snp=15 mm

Web panels 1 & 2:

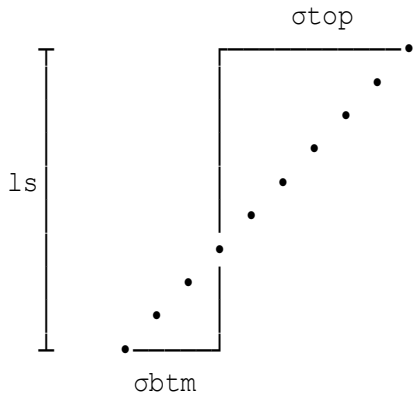

Longitudinal stresses in web with transverse stiffeners

Panel length =4000 mm
ls=1200 mm

Compression stresses are positive

Stress at top of web plate (σtop) stop=200 N/mm²
Stress at btm of web plate (σbtm) sbtm=-200 N/mm²

Design parameters

Depth of stiffener hs=150 mm
Stiffener thickness ts=15 mm
Yield strength (web) fyw=355 N/mm²
Yield strength (stiffener) fys=355 N/mm²

Limiting outstand to prevent torsional buckling - Clause 9.2.1(8)

Expression 9.3 in EN 1993-1-5 is further simplified by Table 2.6 in " Eurocode 3: Design of steel structures Part 1-5: Design of plated structures " ECCS Eurocode Design Manuals.
Yield strength to be adopted fy=355 N/mm²
Strain value ε (EC3 Part 1-1) ew=SQR(235/fyw)=0.81362
Strain value ε (EC3 Part 1-1) es=SQR(235/fys)=0.81362
Ratio (hs/ts) p=hs/ts=10
Limit to ratio p=(hs/ts) is 13ε=10.577.
Ratio (hs/ts)=10 is not greater than limit 13ε=10.577.
Stiffener complies with Clause 9.2.1(8).

Design shear resistance (double sided transverse stiffener)

The effective cross section of the intermediate double-sided transverse stiffener is as shown below:

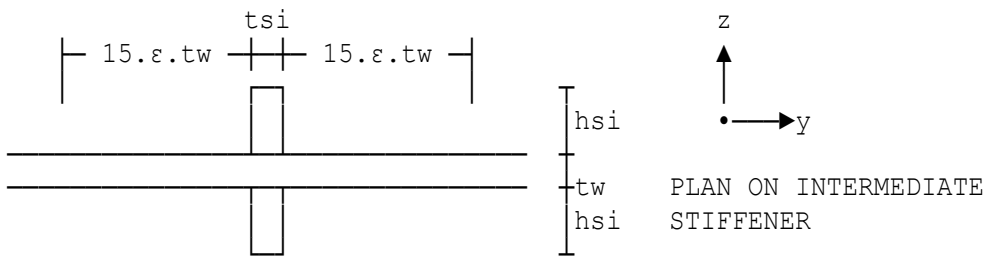

2nd moment of area yy axis:
Iyy=tsi*(2*hsi+tw)^3/12+(30*ew*tw)*tw^3/12
=38.006E6 mm⁴
Design shear resistance VbRd=chi*Ae*fyw/(gamM1*1000)=2644.7 kN

Axial force in the stiffener due to shear - BS EN 1993-1-5

Shear buckling coefficient for web panel kt is derived from Clause 5.2.
Buckling coefficient (Annex A) kt=5.34+4*(hw/a)^2=5.7
Modified slenderness λw lamw=0.76*(fy/tcr)^0.5=1.3767
Max design shear force in panel VEd1=1450 kN
Externally applied design load Pext1=0 kN

Option 1:
Longitudinal compressive stress σxEd=0 for symmetrical sections.
Vertical force generated in stiffener arising from the shear induced tension field (see older version of NA to BS EN 1993-1-5:2006):
PEd1'=VEd1-hw*tw*0.8*tcr/1000=203.7 kN

Option 2:
Vertical force generated in the stiffener as per BS EN 1993-1-5
(see NOTE, Clause 9.3.3(3)):
PEd1=VEd1-fyw*hw*tw/(SQR(3)*gamM1*lamw^2*1000)=34.359 kN
Generated force to be adopted PEd1=203.7 kN
Design axial load in stiffener PEd=PEd1+Pext1=203.7 kN
As PEd ≤ VbRd (203.7 kN ≤ 2644.7 kN), the design shear force does not exceed the shear resistance. Hence OK.

Connection to the web

Design shear load on weld FwEd=tw^2/(5*hs)+PEd/(2*(hw-2*snp))
=0.27905 kN/mm
Weld size required sww=FwEd*10^3/(2*0.7*fvwd)=0.82636 mm
Weld size provided sw1=6 mm

Stiffness check - Clause 9.3.3(3)

2nd moment of area (effe.section) Ipro=38.006E6 mm^4
2nd moment of area required Ireq=0.75*hw*tw^3=1.5552E6 mm^4
As Ireq ≤ Ipro (1.5552E6 mm^4 ≤ 38.006E6 mm^4), the stiffener is OK.

DESIGN SUMMARY	**Panel length**	**4000 mm**
	Panel width	**1200 mm**
	Beam web thickness	**12 mm**
	Depth of stiffener	**150 mm**
	Stiffener thickness	**15 mm**
	Design shear force	**1450 kN**
	Axial load in stiffener	**203.7 kN**
	Design shear resistance	**2644.7 kN**
INTERMEDIATE STIFFENER	**Load carrying stiffener**	
	2No/150 mm x 15 mm flats	
	Grade S 355 steel	
	connected by 4/6 mm FW	

Location: Ex3 - Transverse web stiffener (SCI P357 Ex1 page 62)

Transverse web stiffeners (BS EN 1993-1-5 section 9)

The proforma is in accordance with BS EN 1993-2:2006 "Eurocode 3 Design of Steel Structures - Part 2: Steel bridges" and the NA to BS EN 1993-2:2006.

The proforma is for transverse web stiffeners other than at supports for webs without longitudinal stiffeners. No rules are given within BS EN 1993-2:2006 for the design of intermediate transverse stiffeners so reference has to be made to BS EN 1993-1-5 section 9.

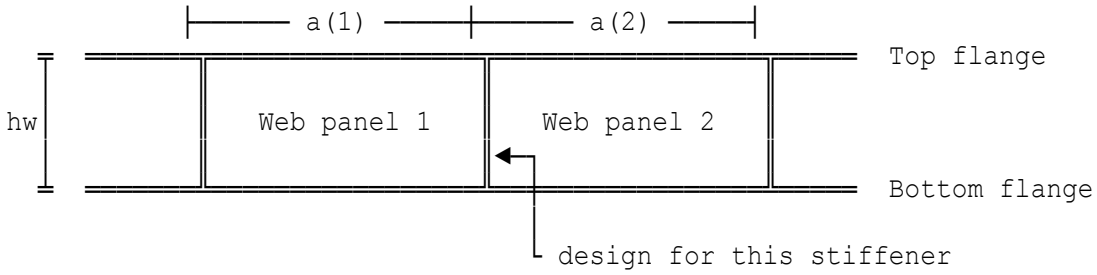

Elevation on web without longitudinal stiffening

Panel length 1	a(1)=1967 mm
Panel width	hw=1000 mm
Length of stiffener	ls=1000 mm
Thickness of web	tw=14 mm
Modulus of elasticity of web	E=210000 N/mm²
Stiffener corner snipe	snp=15 mm

Web panels 1 & 2:

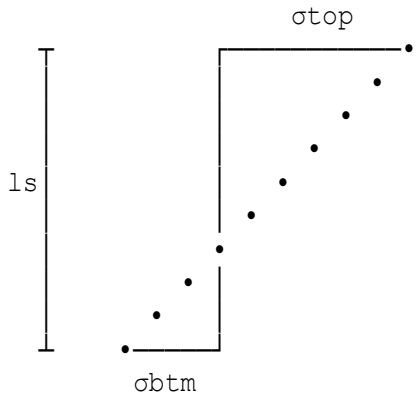

Longitudinal stresses in web with transverse stiffeners

Panel length =1967 mm
ls=1000 mm

Compression stresses are positive

Stress at top of web plate (σtop)	stop=277 N/mm²
Stress at btm of web plate (σbtm)	sbtm=-242 N/mm²

Design parameters

Depth of stiffener hs=200 mm
Stiffener thickness ts=20 mm
Yield strength (web) fyw=355 N/mm²
Yield strength (stiffener) fys=345 N/mm²

Limiting outstand to prevent torsional buckling - Clause 9.2.1(8)

Expression 9.3 in EN 1993-1-5 is further simplified by Table 2.6 in " Eurocode 3: Design of steel structures Part 1-5: Design of plated structures " ECCS Eurocode Design Manuals.
Yield strength to be adopted fy=345 N/mm²
Strain value ε (EC3 Part 1-1) ew=SQR(235/fyw)=0.81362
Strain value ε (EC3 Part 1-1) es=SQR(235/fys)=0.82532
Ratio (hs/ts) p=hs/ts=10
Limit to ratio p=(hs/ts) is 13ε=10.729.
Ratio (hs/ts)=10 is not greater than limit 13ε=10.729.
Stiffener complies with Clause 9.2.1(8).

Design shear resistance (double sided transverse stiffener)

The effective cross section of the intermediate double-sided transverse stiffener is as shown below:

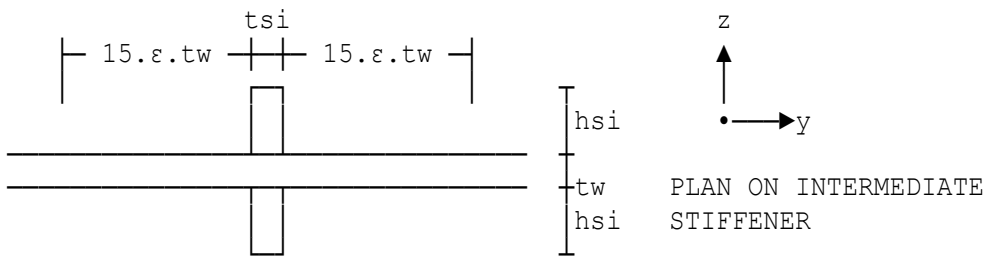

2nd moment of area yy axis:
Iyy=tsi*(2*hsi+tw)^3/12+(30*ew*tw)*tw^3/12
=118.34E6 mm⁴
Design shear resistance VbRd=chi*Ae*fysi/(gamM1*1000)
=4097.4 kN

Axial force in the stiffener due to shear - BS EN 1993-1-5

Shear buckling coefficient for web panel kt is derived from Clause 5.2.
Buckling coefficient (Annex A) kt=5.34+4*(hw/a)^2=6.3738
Modified slenderness λw lamw=hw/(37.4*tw*ew*SQR(kt))=0.92978
Max design shear force in panel VEd1=2511 kN
Externally applied design load Pext1=0 kN

Option 1:
Longitudinal compressive stress σxEd=0 for symmetrical sections.
Vertical force generated in stiffener arising from the shear induced tension field (see older version of NA to BS EN 1993-1-5:2006):
PEd1'=VEd1-hw*tw*0.8*tcr/1000=-144.65 kN

Option 2:
Vertical force generated in the stiffener as per BS EN 1993-1-5
(see NOTE, Clause 9.3.3(3)):
PEd1=VEd1-fyw*hw*tw/(SQR(3)*gamM1*lamw^2*1000)=-506.47 kN
Design axial load in stiffener PEd=PEd1+Pext1=0 kN
As PEd ≤ VbRd (0 kN ≤ 4097.4 kN), the design shear force does not exceed the shear resistance. Hence OK.

Connection to the web

Design shear load on weld FwEd=tw^2/(5*hs)=0.196 kN/mm
Weld size required sww=FwEd*10^3/(2*0.7*fvwd)=0.58042 mm
Weld size provided sw1=6 mm

Stiffness check - Clause 9.3.3(3)

2nd moment of area (effe.section) Ipro=118.34E6 mm^4
2nd moment of area required Ireq=0.75*hw*tw^3=2.058E6 mm^4
As Ireq ≤ Ipro (2.058E6 mm^4 ≤ 118.34E6 mm^4), the stiffener is OK.

DESIGN SUMMARY	**Panel length**	**1967 mm**
	Panel width	**1000 mm**
	Beam web thickness	**14 mm**
	Depth of stiffener	**200 mm**
	Stiffener thickness	**20 mm**
	Design shear force	**2511 kN**
	Axial load in stiffener	**0 kN**
	Design shear resistance	**4097.4 kN**
INTERMEDIATE STIFFENER	**Load carrying stiffener**	
	2No/200 mm x 20 mm flats	
	Grade S 355 steel	
	connected by 4/6 mm FW	

Location: Ex4 - Transverse web stiffener (SCI P357 Ex1 page 62)

Transverse web stiffeners (BS EN 1993-1-5 section 9)

The proforma is in accordance with BS EN 1993-2:2006 "Eurocode 3 Design of Steel Structures - Part 2: Steel bridges" and the NA to BS EN 1993-2:2006.

The proforma is for transverse web stiffeners other than at supports for webs without longitudinal stiffeners. No rules are given within BS EN 1993-2:2006 for the design of intermediate transverse stiffeners so reference has to be made to BS EN 1993-1-5 section 9.

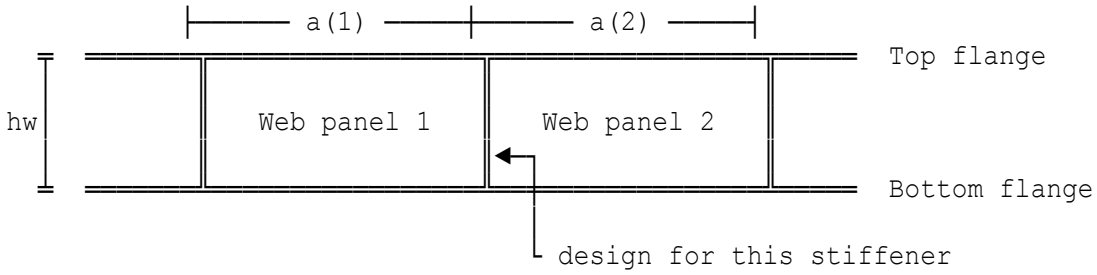

Elevation on web without longitudinal stiffening

Panel length 1	a(1)=1967 mm
Panel width	hw=1000 mm
Length of stiffener	ls=1000 mm
Thickness of web	tw=14 mm
Modulus of elasticity of web	E=210000 N/mm²
Stiffener corner snipe	snp=15 mm

Web panels 1 & 2:

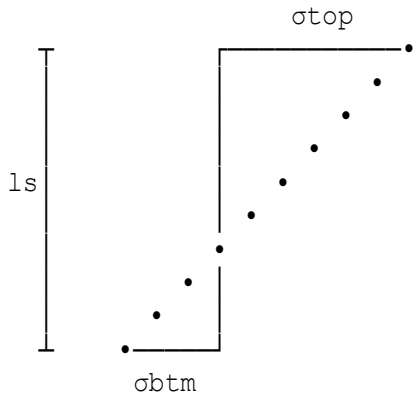

Longitudinal stresses in web with transverse stiffeners

Panel length =1967 mm
ls=1000 mm

Compression stresses are positive

Stress at top of web plate (σtop)	stop=277 N/mm²
Stress at btm of web plate (σbtm)	sbtm=-242 N/mm²

Design parameters

Depth of stiffener hs=200 mm
Stiffener thickness ts=20 mm
Yield strength (web) fyw=355 N/mm²
Yield strength (stiffener) fys=345 N/mm²

Limiting outstand to prevent torsional buckling - Clause 9.2.1(8)

Expression 9.3 in EN 1993-1-5 is further simplified by Table 2.6 in " Eurocode 3: Design of steel structures Part 1-5: Design of plated structures " ECCS Eurocode Design Manuals.
Yield strength to be adopted fy=345 N/mm²
Strain value ε (EC3 Part 1-1) ew=SQR(235/fyw)=0.81362
Strain value ε (EC3 Part 1-1) es=SQR(235/fys)=0.82532
Ratio (hs/ts) p=hs/ts=10
Limit to ratio p=(hs/ts) is 13ε=10.729.
Ratio (hs/ts)=10 is not greater than limit 13ε=10.729.
Stiffener complies with Clause 9.2.1(8).

Design shear resistance (double sided transverse stiffener)

The effective cross section of the intermediate double-sided transverse stiffener is as shown below:

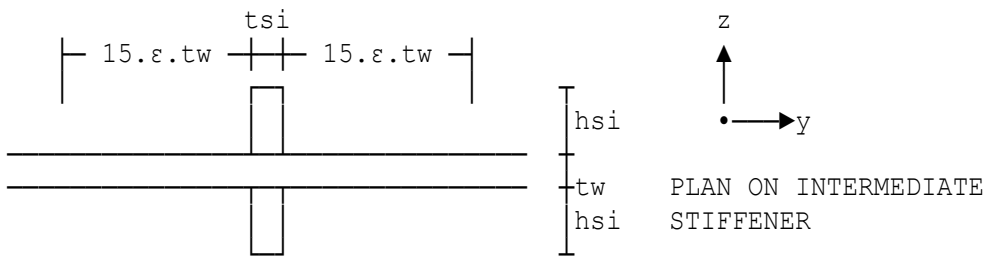

2nd moment of area yy axis:
Iyy=tsi*(2*hsi+tw)^3/12+(30*ew*tw)*tw^3/12
=118.34E6 mm⁴
Design shear resistance VbRd=chi*Ae*fysi/(gamM1*1000)
=4097.4 kN

Axial force in the stiffener due to shear - BS EN 1993-1-5

Shear buckling coefficient for web panel kt is derived from Clause 5.2.
Buckling coefficient (Annex A) kt=5.34+4*(hw/a)^2=6.3738
Modified slenderness λw lamw=hw/(37.4*tw*ew*SQR(kt))=0.92978
Max design shear force in panel VEd1=2511 kN
Externally applied design load Pext1=0 kN

Option 1:
Longitudinal compressive stress σxEd=0 for symmetrical sections.
Vertical force generated in stiffener arising from the shear induced tension field (see older version of NA to BS EN 1993-1-5:2006):
PEd1'=VEd1-hw*tw*0.8*tcr/1000=-144.65 kN

Option 2:
Vertical force generated in the stiffener as per BS EN 1993-1-5
(see NOTE, Clause 9.3.3(3)):
PEd1=VEd1-fyw*hw*tw/(SQR(3)*gamM1*lamw^2*1000)=-506.47 kN
Design axial load in stiffener PEd=PEd1+Pext1=0 kN
As PEd ≤ VbRd (0 kN ≤ 4097.4 kN), the design shear force does not exceed the shear resistance. Hence OK.

Connection to the web

Design shear load on weld FwEd=tw^2/(5*hs)=0.196 kN/mm
Weld size required sww=FwEd*10^3/(2*0.7*fvwd)=0.58042 mm
Weld size provided sw1=6 mm

Stiffness check - Clause 9.3.3(3)

2nd moment of area (effe.section) Ipro=118.34E6 mm^4
2nd moment of area required Ireq=0.75*hw*tw^3=2.058E6 mm^4
As Ireq ≤ Ipro (2.058E6 mm^4 ≤ 118.34E6 mm^4), the stiffener is OK.

DESIGN SUMMARY	**Panel length**	**1967 mm**
	Panel width	**1000 mm**
	Beam web thickness	**14 mm**
	Depth of stiffener	**200 mm**
	Stiffener thickness	**20 mm**
	Design shear force	**2511 kN**
	Axial load in stiffener	**0 kN**
	Design shear resistance	**4097.4 kN**
INTERMEDIATE STIFFENER	**Load carrying stiffener**	
	2No/200 mm x 20 mm flats	
	Grade S 355 steel	
	connected by 4/6 mm FW	

Location: Ex5 - Transverse web stiffener (As Ex1 but with ans2=0)

Transverse web stiffeners (BS EN 1993-1-5 section 9)

The proforma is in accordance with BS EN 1993-2:2006 "Eurocode 3 Design of Steel Structures - Part 2: Steel bridges" and the NA to BS EN 1993-2:2006.

The proforma is for transverse web stiffeners other than at supports for webs without longitudinal stiffeners. No rules are given within BS EN 1993-2:2006 for the design of intermediate transverse stiffeners so reference has to be made to BS EN 1993-1-5 section 9.

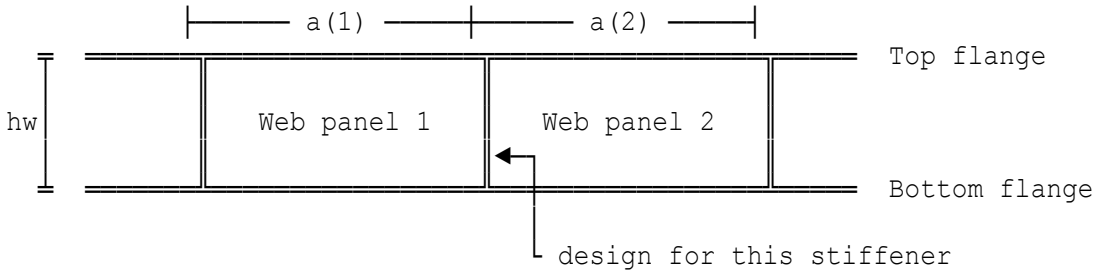

Elevation on web without longitudinal stiffening

Panel length 1	a(1)=4000 mm
Panel length 2	a(2)=4200 mm
Panel width	hw=1200 mm
Length of stiffener	ls=1200 mm
Thickness of web	tw=12 mm
Modulus of elasticity of web	E=210000 N/mm²
Stiffener corner snipe	snp=15 mm

Largest web panel:

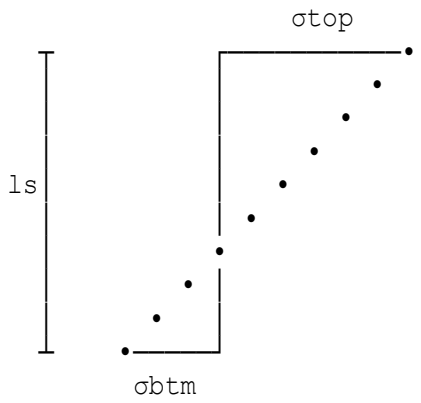

Longitudinal stresses in web with transverse stiffeners

Panel length =4200 mm
ls=1200 mm

Compression stresses are positive

Stress at top of web plate (σtop)	stop=200 N/mm²
Stress at btm of web plate (σbtm)	sbtm=-200 N/mm²

Design parameters

Depth of stiffener hs=150 mm
Stiffener thickness ts=15 mm
Yield strength (web) fyw=355 N/mm²
Yield strength (stiffener) fys=355 N/mm²

Limiting outstand to prevent torsional buckling - Clause 9.2.1(8)

Expression 9.3 in EN 1993-1-5 is further simplified by Table 2.6 in " Eurocode 3: Design of steel structures Part 1-5: Design of plated structures " ECCS Eurocode Design Manuals.
Yield strength to be adopted fy=355 N/mm²
Strain value ε (EC3 Part 1-1) ew=SQR(235/fyw)=0.81362
Strain value ε (EC3 Part 1-1) es=SQR(235/fys)=0.81362
Ratio (hs/ts) p=hs/ts=10
Limit to ratio p=(hs/ts) is 13ε=10.577.
Ratio (hs/ts)=10 is not greater than limit 13ε=10.577.
Stiffener complies with Clause 9.2.1(8).

Design shear resistance (single-sided transverse stiffener)

The effective cross section of the intermediate single-sided transverse stiffener is as shown below:

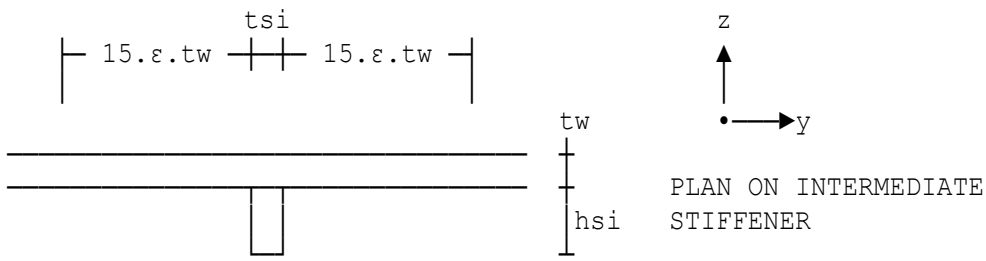

2nd moment of area yy axis Iyy=Ipro=13.438E6 mm⁴
Design shear resistance VbRd=chi*Ae*fyw/(gamM1*1000)=1871.9 kN

Axial force in the stiffener due to shear - BS EN 1993-1-5

Shear buckling coefficient for web panel kt is derived from Clause 5.2.
Buckling coefficient (Annex A) kt=5.34+4*(hw/a)^2=5.6665
Modified slenderness λw lamw=0.76*(fy/tcr)^0.5=1.3808
Max design shear force in panel VEd1=1700 kN
Externally applied design load Pext1=0 kN

Option 1:
Longitudinal compressive stress σxEd=0 for symmetrical sections.
Vertical force generated in stiffener arising from the shear induced tension field (see older version of NA to BS EN 1993-1-5:2006):
PEd1'=VEd1-hw*tw*0.8*tcr/1000=461.01 kN

Option 2:
Vertical force generated in the stiffener as per BS EN 1993-1-5 (see NOTE, Clause 9.3.3(3)):
PEd1=VEd1-fyw*hw*tw/(SQR(3)*gamM1*lamw^2*1000)=292.67 kN

Generated force to be adopted PEd1=461.01 kN
Design axial load in stiffener PEd=PEd1+Pext1=461.01 kN
As PEd ≤ VbRd (461.01 kN ≤ 1871.9 kN), the design shear force does not exceed the shear resistance. Hence OK.

Connection to the web

Design shear load on weld FwEd=tw^2/(5*hs)+PEd/(hw-2*snp)
=0.58603 kN/mm
Weld size required sww=FwEd*10^3/(2*0.7*fvwd)=1.7354 mm
Weld size provided sw1=6 mm

Stiffness check - Clause 9.3.3(3)

2nd moment of area (effe.section) Ipro=13.438E6 mm^4
2nd moment of area required Ireq=0.75*hw*tw^3=1.5552E6 mm^4
As Ireq ≤ Ipro (1.5552E6 mm^4 ≤ 13.438E6 mm^4), the stiffener is OK.

DESIGN SUMMARY	**Panel length**	**4000 mm**
	Panel width	**1200 mm**
	Beam web thickness	**12 mm**
	Depth of stiffener	**150 mm**
	Stiffener thickness	**15 mm**
	Design shear force	**1700 kN**
	Axial load in stiffener	**461.01 kN**
	Design shear resistance	**1871.9 kN**
INTERMEDIATE STIFFENER	**Load carrying stiffener**	
	1No/150 mm x 15 mm flats	
	Grade S 355 steel	
	connected by 2/6 mm FW	

Location: Balustrade design with concentric base plate

Balustrade design with a concentric base plate

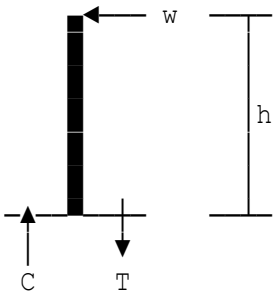

Calculations to BS5950

C = compression
T = tension

Yield strength	fy=275 N/mm²
Spacing between balusters	a=1.5 m
Unfactored udl at rail level	w=3 kN/m
Height of baluster	h=1.1 m
Base plate depth	D=400 mm
Base plate width	B=400 mm
Base plate thickness	t=15 mm
Distance of fixings from plate edge	edg=50 mm

DESIGN SUMMARY

(a)	**Ultimate moment on baluster**	**Mu =7.92 kNm**
(b)	**2nd moment of area required**	**Ireq =157.91 cm⁴**
(c)	**Unfactored shear on fixings group**	**Q =4.5 kN**
(d)	**Base plate size 400 mm x 400 mm x 15 mm**	
(e)	**Design strength for base plate**	**fy=275 N/mm²**
(f)	**Design strength for baluster**	**fy=275 N/mm²**
(g)	**Total unfactored tension on group of tension fixings**	**T=16.5 kN**

Location: Balustrade design with non concentric base plate

Balustrade design with a non-concentric base plate

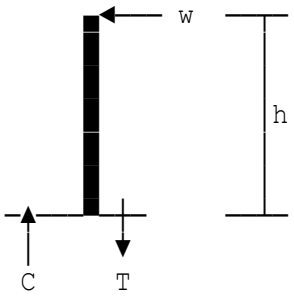

Calculations to BS5950

C = compression
T = tension

Yield strength	fy=275 N/mm²
Spacing between balusters	a=1.5 m
Unfactored udl at rail level	w=3 kN/m
Height of baluster	h=1.1 m
Base plate depth	D=300 mm
Base plate width	B=400 mm
Base plate thickness	t=22 mm

Distance of fixings from plate edge edg=50 mm

DESIGN SUMMARY

(a)	**Ultimate moment on baluster**	**Mu =7.92 kNm**
(b)	**2nd moment of area required**	**Ireq =157.91 cm⁴**
(c)	**Unfactored shear on fixings group**	**Q =4.5 kN**
(d)	**Base plate size 300 mm x 400 mm x 22 mm**	
(e)	**Design strength for base plate**	**fy=275 N/mm²**
(f)	**Design strength for baluster**	**fy=275 N/mm²**
(g)	**Total unfactored tension on group of tension fixings**	**T=24.75 kN**

Location: Balustrade design with concentric base plate

Balustrade design with a concentric base plate

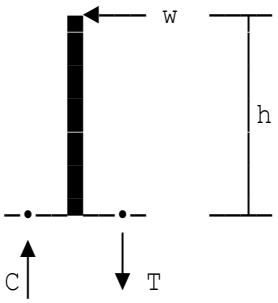

Calculations to EC3

C = compression
T = tension

Yield strength (baluster & plate)	fy=275 N/mm²
Spacing between balusters	a=1.5 m
Unfactored udl at rail level	w=3 kN/m
Height of baluster	h=1.1 m
Load factor for variable action	gamQ=1.5
Base plate depth	D=400 mm
Base plate width	B=400 mm
Base plate thickness	t=15 mm
Distance of fixings from plate edge	edg=50 mm

DESIGN SUMMARY

(a)	**Ultimate moment on baluster**	**Mu =7.425 kNm**
(b)	**2nd moment of area required**	**Ireq =157.91 cm⁴**
(c)	**Unfactored shear on fixings group**	**Q =4.5 kN**
(d)	**Base plate size 400 mm x 400 mm x 15 mm**	
(e)	**Design strength for base plate**	**fy=275 N/mm²**
(f)	**Design strength for baluster**	**fy=275 N/mm²**
(g)	**Total unfactored tension on group of tension fixings**	**T=16.5 kN**

Location: Balustrade design with non concentric base plate

Balustrade design with a non-concentric base plate

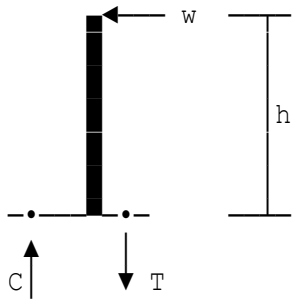

Calculations to EC3

C = compression
T = tension

Yield strength	fy=275 N/mm²
Spacing between balusters	a=1.5 m
Unfactored udl at rail level	w=3 kN/m
Height of baluster	h=1.1 m
Load factor for variable action	gamQ=1.5
Base plate depth	D=300 mm
Base plate width	B=400 mm
Base plate thickness	t=22 mm

Distance of fixings from plate edge edg=50 mm

DESIGN SUMMARY

(a)	**Ultimate moment on baluster**	**Mu =7.425 kNm**
(b)	**2nd moment of area required**	**Ireq =157.91 cm⁴**
(c)	**Unfactored shear on fixings group**	**Q =4.5 kN**
(d)	**Base plate size 300 mm x 400 mm x 22 mm**	
(e)	**Design strength for base plate**	**fy=275 N/mm²**
(f)	**Design strength for baluster**	**fy=275 N/mm²**
(g)	**Total unfactored tension on group of tension fixings**	**T=24.75 kN**

Location: Default 1

Steel runway beam design

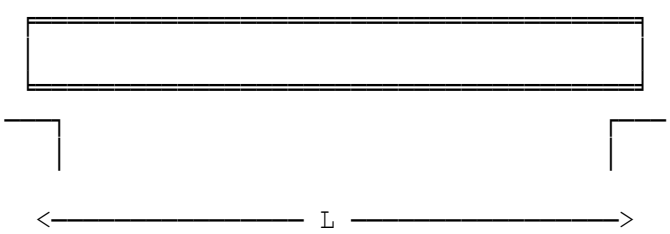

Beam is designed in accordance with BS2853:1957 & BS 449.

Beam span	L=3 m
Effective length of beam	Le=3.6 m
Trolley capacity	Wcap=1.5 tonnes
Number of wheels on trolley	Nowheels=4
Load to be carried by trolley	W=1.5 tonnes

Strength of steel - BS 449 Clause 3.a.(1)

Steel design grade (43 or 50)	Grade=43
Maxm longitudinal bending stress	F1max=162 N/mm²
Maxm transverse bending stress	F2max=223 N/mm²
Maxm shear stress	Fvmax=100 N/mm²

Cross flange bending

Transverse bending stresses
when trolley remote from end Ftr1=1.4*C*Wk*1E3*Dyn/(K1*T*T)
=72.72 N/mm²

Transverse bending stresses
when trolley at end of beam Ftr2=1.4*C*Wk*1E3*Dyn/(K2*T*T)
=116.6 N/mm²

The actual transverse bending stress does not exceed the maximum permissible when load is remote from the end of the beam
i.e Ftr1 ≤ F2max (72.72 N/mm² ≤ 223 N/mm²).
Trolley cannot approach end of beam and stress Ftr2 does not apply.

Combined stress check

Actual long'l bending stress	Fbc=41.19 N/mm²
Change back to Tonf/in2	F1=Fbc/15.44=2.668 Tonf/in2
Allowable cross flange bending	PK2=14.5 Tonf/in2
Convert to N/mm²	PK2=PK2*15.44=223.9 N/mm²

The interaction of the longitudinal and transverse stresses at the centre of the span is satisfactory (i.e 72.72 N/mm² ≤ 223.9 N/mm²).

Check for deflection

Total deflection DEL=D1+D2=1.165 mm
Limiting deflection DELlim=L*1E3/500=6 mm
Since DEL ≤ DELlim (1.165 mm ≤ 6 mm), deflection is within limiting value.

DESIGN SUMMARY

Beam under consideration is simply supported.

Beam span is	**3 m**
Beam effective length	**3.6 m**
Trolley capacity	**1.5 tonnes**
Beam S.W.L.	**1.5 tonnes**
Hoist type	**Hand operated**
Dynamic factor	**1.1**
Section size	**254 x 102 x 28 Universal Beam**

Section OK for long'l and transverse bending, shear and deflection.
Runway beam to be clearly marked for S.W.L. of 1.5 tonnes.

Location: Default 2

Steel runway beam design

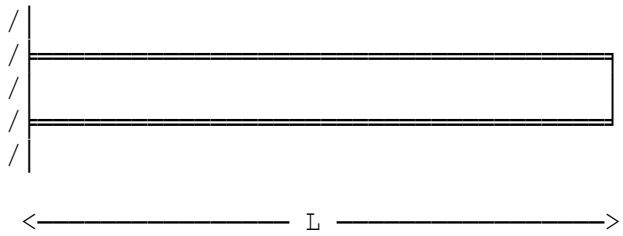

Beam is designed in accordance with BS2853:1957 & BS 449.

Beam span	L=1.5 m
Effective length of beam	Le=3 m
Trolley capacity	Wcap=1.5 tonnes
Number of wheels on trolley	Nowheels=4
Load to be carried by trolley	W=1.5 tonnes

Strength of steel - BS 449 Clause 3.a.(1)

Steel design grade (43 or 50)	Grade=43
Maxm longitudinal bending stress	F1max=162 N/mm²
Maxm transverse bending stress	F2max=223 N/mm²
Maxm shear stress	Fvmax=100 N/mm²

Cross flange bending

Transverse bending stresses
when trolley remote from end Ftr1=1.4*C*Wk*1E3*Dyn/(K1*T*T)
=72.72 N/mm²

Transverse bending stresses
when trolley at end of beam Ftr2=1.4*C*Wk*1E3*Dyn/(K2*T*T)
=116.6 N/mm²

The actual transverse bending stress does not exceed the maximum permissible when load is remote from the end of the beam
i.e Ftr1 ≤ F2max (72.72 N/mm² ≤ 223 N/mm²).
The actual trans. bending stress does not exceed the max. permissible when load is near end of beam (i.e. 116.6 N/mm² ≤ 223 N/mm²).

Combined stress check

Beam is a cantilever and longitudinal and transverse stresses cannot be coincident, apart from a small bending moment caused by self weight of beam, so no check is required.

Check for deflection

Total deflection DEL=D1+D2=2.279 mm
Limiting deflection DELlim=L*1E3/250=6 mm
Since DEL ≤ DELlim (2.279 mm ≤ 6 mm), deflection is within limiting value.

DESIGN SUMMARY

Beam under consideration is cantilevered.

Beam span is	**1.5 m**
Beam effective length	**3 m**
Trolley capacity	**1.5 tonnes**
Beam S.W.L.	**1.5 tonnes**
Hoist type	**Hand operated**
Dynamic factor	**1.1**
Section size	**254 x 102 x 28 Universal Beam**

Section OK for long'l and transverse bending, shear and deflection.
Runway beam to be clearly marked for S.W.L. of 1.5 tonnes.

Location: Default 3

Steel runway beam design

Beam is designed in accordance with BS2853:1957 & BS 449.

Beam span	L=3 m
Effective length of beam	Le=3.6 m
Trolley capacity	Wcap=1.5 tonnes
Number of wheels on trolley	Nowheels=2
Load to be carried by trolley	W=1.5 tonnes

Strength of steel - BS 449 Clause 3.a.(1)

Steel design grade (43 or 50)	Grade=43
Maxm longitudinal bending stress	F1max=162 N/mm²
Maxm transverse bending stress	F2max=223 N/mm²
Maxm shear stress	Fvmax=100 N/mm²

Cross flange bending

Transverse bending stresses
when trolley remote from end Ftr1=1.4*C*Wk*1E3*Dyn/(K1*T*T)
=158.9 N/mm²
Transverse bending stresses
when trolley at end of beam Ftr2=1.4*C*Wk*1E3*Dyn/(K2*T*T)
=233.1 N/mm²
The actual transverse bending stress does not exceed the maximum permissible when load is remote from the end of the beam
i.e Ftr1 ≤ F2max (158.9 N/mm² ≤ 223 N/mm²).
Member overstressed due to cross flange bending when trolley near end of beam. Place stop ends well away from end of beam or strengthen beam by plating flanges.

Combined stress check

Actual long'l bending stress	Fbc=41.19 N/mm²
Change back to Tonf/in2	F1=Fbc/15.44=2.668 Tonf/in2
Allowable cross flange bending	PK2=14.5 Tonf/in2
Convert to N/mm²	PK2=PK2*15.44=223.9 N/mm²

The interaction of the longitudinal and transverse stresses at the centre of the span is satisfactory (i.e 158.9 N/mm² ≤ 223.9 N/mm²).

Check for deflection

Total deflection DEL=D1+D2=1.165 mm
Limiting deflection DELlim=L*1E3/500=6 mm
Since DEL ≤ DELlim (1.165 mm ≤ 6 mm), deflection is within limiting value.

DESIGN SUMMARY

Beam under consideration is suspended.

Beam span is	**3 m**
Beam effective length	**3.6 m**
Trolley capacity	**1.5 tonnes**
Beam S.W.L.	**1.5 tonnes**
Hoist type	**Hand operated**
Dynamic factor	**1.1**
Section size	**254 x 102 x 28 Universal Beam**

Section OK for long'l and transverse bending, shear and deflection.
Runway beam to be clearly marked for S.W.L. of 1.5 tonnes.

Member overstressed due to cross flange bending when trolley near end of beam. Place stop ends well away from the end of beam or strengthen flanges by plating.

Location: Ex1 - Simply supported runway beam

Steel runway beam design

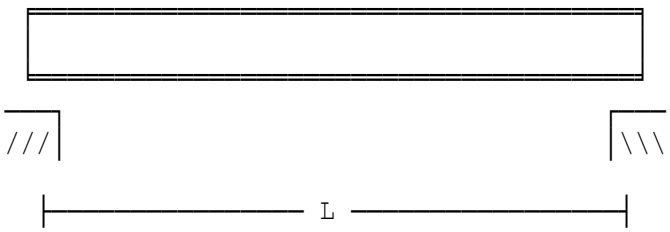

Runway beam is designed in accordance with BS EN 1993-6:2007 and BS EN 1993-1-1:2005.

Beam span L=3 m
Effective length of beam Le=3.6 m

Trolley capacity (unfactored) Wcap=1.5 tonnes
Number of wheels on trolley Nowheels=4
Dynamic factor φ Phi=1.1

254 x 102 x 28 UKB
Dimensions (mm): h=260.4 b=102.2 tw=6.3 tf=10 r=7.6
Properties (cm): Iy=4010 Iz=179 Wply=353 Wplz=54.8 It=9.57
Partial factor (permanent action) gamG=1.35
Partial factor (variable action) gamQ=1.5

Resistance of bottom flange to wheel loads

(EC3 Part 6, Section 6.7)
Stress at mid-line of the flange due to the overall internal moment in the runway beam sfEd=MyEd*10^3/Wely=61.56 N/mm²
Design resistance (bottom flange) FfRd=leff*tf^2*fy*comp1/(4*m*1000)
=108.34 kN
Vertical crane wheel load FzEd=gamQ*Wk*Phi/Nowheels=6.1792 kN
As FzEd ≤ FfRd (6.1792 kN ≤ 108.34 kN), the design resistance of the bottom flange is satisfactory.

Lateral torsional buckling

Effective length of beam Le=3.6 m
Critical moment Mcr=C1*Et*Sr/10^6=80.026 kNm
Design buckling resistance moment MbRd=ChiLT*Wply*fy/(gamM1*10^3)
=59.642 kNm
Unity factor unitb=MyEd/MbRd=0.31789
Section chosen is considered suitable.

Local bending stresses in the bottom flange due to wheel loads

Coefficient Cx0=0.05-0.58*mu+0.148*EXP(3.015*mu) =0.66321
Coefficient Cx1=2.23-1.49*mu+1.39*EXP(-18.33*mu) =1.2978
Coefficient Cx2=0.73-1.58*mu+2.91*EXP(-6.33*mu) =-0.20308
Coefficient Cy0=-2.11+1.977*mu+0.0076*EXP(6.530*mu) =-0.4211
Coefficient Cy1=10.108-7.408*mu-10.108*EXP(-1.364*mu) =1.1675
Coefficient Cy2=0 =0

Serviceability limit state stress check - EC3 Part 6, Section 7.5

Global shear stress vEd=VzEd*10^3/(h*tw)=15.41 N/mm²
Shear resistance (exp. 7.2b) vRd=fy/(SQR(3)*gamMs)=144.34 N/mm²
As vEd ≤ vRd (15.41 N/mme ≤ 144.34 N/mm²), shear stress OK.
Hence expression 7.2e is satisfied.

Combined bending and torsion check - EC3 Part 6, Annex A

Factored horizontal force WH1=2.247 kN
Total minor axis design moment MzEd=MzEd1+MzEd2=1.9106 kNm
Design warping torsional moment MwEd=0.44101 kNm
Minor axis resistance moment MzRd=fy*Welz/10^3=9.6331 kNm
Warping torsional resist. moment MwRd=MzRd/2=4.8165 kNm

$$\frac{MyEd}{MbRd} + \frac{Cmz.MzEd}{MzRd} + \frac{kw.kzw.ka.MwEd}{MwRd/gamM1} \leq 1$$

Unity factor uf=MyEd/MbRd+Cmz*MzEd/MzRd+kw*kzw*ka*MwEd/MwRd=0.56197
≤ 1
Hence the unity relationship is satisfied.

Check for deflection - EC6 Part 6, Section 7.3

Vertical deflection (payload) DEL1=D2=1.1007 mm
Vertical deflection (total load) DEL2=D1+D2=1.1355 mm
Since DEL1 ≤ DELl1 (1.1007 mm ≤ 6 mm), deflection OK.
Since DEL2 ≤ DELl2 (1.1355 mm ≤ 5 mm), deflection OK.

Vibration of bottom flange

The slenderness ratio of the bottom flange L/iz should be limited to 250, where iz is the radius of gyration of the bottom flange and L is the distance between lateral restraints. For simplicity, the inertia of the bottom flange will be taken as half of Iz.
Bottom flange inertia Izf=Iz/2*1E4=895000 mm⁴
Radius of gyration of the flange iz=SQR(Izf/(b*tf))=29.593 mm
Slenderness of bottom flange sbf=L*1E3/iz=101.38
As slenderness of bottom flange is ≤ 250 vibration is satisfactory.

DESIGN SUMMARY

Section size	**260 x 102 x 28 UKB**
Beam actual span	**3 m**
Beam effective length	**3.6 m**
Trolley capacity	**14.7 kN**
Beam S.W.L.	**14.7 kN**
Hoist type	**Hand operated.**
Dynamic factor	**1.1**
Total load vertical deflection	**1.03 mm (without dynamic effects)**
Total load vertical deflection	**1.14 mm (with dynamic effects)**
Total load limiting deflection	**5 mm**
Bending and torsion interaction	**0.562 ≤ 1**

NOTE: The runway beam under consideration is simply supported.
Longitudinal & transverse bending, shear and deflection are OK.
Runway beam to be clearly marked for S.W.L. of 14.7 kN.

Location: Ex2 - Cantilever runway beam

Steel runway beam design

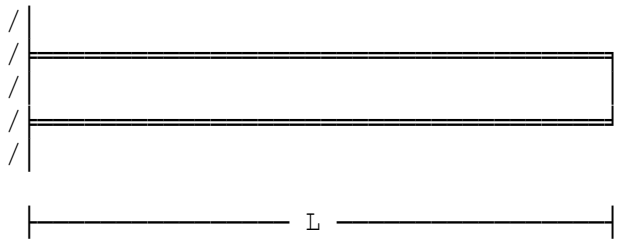

Runway beam is designed in accordance with BS EN 1993-6:2007 and BS EN 1993-1-1:2005.

Beam span L=1.5 m
Effective length of beam Le=3 m

Trolley capacity (unfactored) Wcap=1.5 tonnes
Number of wheels on trolley Nowheels=4
Dynamic factor φ Phi=1.1

254 x 102 x 28 UKB
Dimensions (mm): h=260.4 b=102.2 tw=6.3 tf=10 r=7.6
Properties (cm): Iy=4010 Iz=179 Wply=353 Wplz=54.8 It=9.57
Partial factor (permanent action) gamG=1.35
Partial factor (variable action) gamQ=1.5

Resistance of bottom flange to wheel loads

(EC3 Part 6, Section 6.7)
Stress at mid-line of the flange due to the overall internal moment in the runway beam sfEd=MyEd*10^3/Wely=121.75 N/mm²
Distance from LHS support to load xL=1.35 m
Design resistance (bottom flange) FfRd=leff*tf^2*fy*comp1/(4*m*1000)
=38.995 kN
Vertical crane wheel load FzEd=gamQ*Wk*Phi/Nowheels=6.1792 kN
As FzEd ≤ FfRd (6.1792 kN ≤ 38.995 kN), the design resistance of the bottom flange is satisfactory.

Lateral torsional buckling

Effective length of beam Le=3 m
Critical moment Mcr=C1*Et*Sr/10^6=103.49 kNm
Design buckling resistance moment MbRd=ChiLT*Wply*fy/(gamM1*10^3)
=68.427 kNm
Unity factor unitb=MyEd/MbRd=0.54799
Section chosen is considered suitable.

Local bending stresses in the bottom flange due to wheel loads

Coefficient Cx0=0.05-0.58*mu+0.148*EXP(3.015*mu) =0.66321
Coefficient Cx1=2.23-1.49*mu+1.39*EXP(-18.33*mu) =1.2978
Coefficient Cx2=0.73-1.58*mu+2.91*EXP(-6.33*mu) =-0.20308
Coefficient Cy0=-2.11+1.977*mu+0.0076*EXP(6.530*mu) =-0.4211
Coefficient Cy1=10.108-7.408*mu-10.108*EXP(-1.364*mu) =1.1675
Coefficient Cy2=0 =0

Serviceability limit state stress check - EC3 Part 6, Section 7.5

Global shear stress vEd=VzEd*10^3/(h*tw)=15.41 N/mm²
Shear resistance (exp. 7.2b) vRd=fy/(SQR(3)*gamMs)=144.34 N/mm²
As vEd ≤ vRd (15.41 N/mme ≤ 144.34 N/mm²), shear stress OK.
Hence expression 7.2e is satisfied.

Combined bending and torsion check - EC3 Part 6, Annex A

Factored horizontal force WH1=2.247 kN
Total minor axis design moment MzEd=MzEd1+MzEd2=3.0462 kNm
Design warping torsional moment MwEd=0.13503 kNm
Minor axis resistance moment MzRd=fy*Welz/10^3=9.6331 kNm
Warping torsional resist. moment MwRd=MzRd/2=4.8165 kNm

$$\frac{MyEd}{MbRd} + \frac{Cmz.MzEd}{MzRd} + \frac{kw.kzw.ka.MwEd}{MwRd/gamM1} \leq 1$$

Unity factor uf=MyEd/MbRd+Cmz*MzEd/MzRd+kw*kzw*ka*MwEd/MwRd=0.85347
≤ 1
Hence the unity relationship is satisfied.

Check for deflection - EC6 Part 6, Section 7.3

Vertical deflection (payload) DEL1=D2=2.2014 mm
Vertical deflection (total load) DEL2=D1+D2=2.2222 mm
Since DEL1 ≤ DEL11 (2.2014 mm ≤ 6 mm), deflection OK.
Since DEL2 ≤ DEL12 (2.2222 mm ≤ 5 mm), deflection OK.

Vibration of bottom flange

The slenderness ratio of the bottom flange L/iz should be limited to 250, where iz is the radius of gyration of the bottom flange and L is the distance between lateral restraints. For simplicity, the inertia of the bottom flange will be taken as half of Iz.
Bottom flange inertia Izf=Iz/2*1E4=895000 mm⁴
Radius of gyration of the flange iz=SQR(Izf/(b*tf))=29.593 mm
Slenderness of bottom flange sbf=L*1E3/iz=50.688
As slenderness of bottom flange is ≤ 250 vibration is satisfactory.

DESIGN SUMMARY

Section size	**260 x 102 x 28 UKB**
Beam actual span	**1.5 m**
Beam effective length	**3 m**
Trolley capacity	**14.7 kN**
Beam S.W.L.	**14.7 kN**
Hoist type	**Hand operated.**
Dynamic factor	**1.1**
Total load vertical deflection	**2.02 mm (without dynamic effects)**
Total load vertical deflection	**2.22 mm (with dynamic effects)**
Total load limiting deflection	**5 mm**
Bending and torsion interaction	**0.853 ≤ 1**

NOTE: The runway beam under consideration is cantilevered.
Longitudinal & transverse bending, shear and deflection are OK.
Runway beam to be clearly marked for S.W.L. of 14.7 kN.

Location: Ex3 - Suspended runway beam

Steel runway beam design

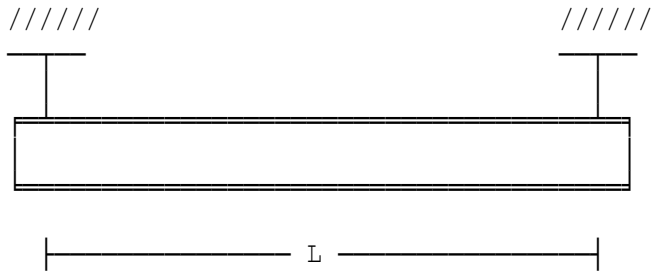

Runway beam is designed in accordance with BS EN 1993-6:2007 and BS EN 1993-1-1:2005.

Beam span L=3 m
Effective length of beam Le=3.6 m

Trolley capacity (unfactored) Wcap=1.5 tonnes
Number of wheels on trolley Nowheels=2
Dynamic factor φ Phi=1.1

254 x 102 x 28 UKB
Dimensions (mm): h=260.4 b=102.2 tw=6.3 tf=10 r=7.6
Properties (cm): Iy=4010 Iz=179 Wply=353 Wplz=54.8 It=9.57
Partial factor (permanent action) gamG=1.35
Partial factor (variable action) gamQ=1.5

Resistance of bottom flange to wheel loads

(EC3 Part 6, Section 6.7)
Stress at mid-line of the flange due to the overall internal moment in the runway beam sfEd=MyEd*10^3/Wely=61.56 N/mm²
Design resistance (bottom flange) FfRd=leff*tf^2*fy*comp1/(4*m*1000)
=108.34 kN
Vertical crane wheel load FzEd=gamQ*Wk*Phi/Nowheels=12.358 kN
As FzEd ≤ FfRd (12.358 kN ≤ 108.34 kN), the design resistance of the bottom flange is satisfactory.

Lateral torsional buckling

Effective length of beam Le=3.6 m
Critical moment Mcr=C1*Et*Sr/10^6=80.026 kNm
Design buckling resistance moment MbRd=ChiLT*Wply*fy/(gamM1*10^3)
=59.642 kNm
Unity factor unitb=MyEd/MbRd=0.31789
Section chosen is considered suitable.

Local bending stresses in the bottom flange due to wheel loads

Coefficient Cx0=0.05-0.58*mu+0.148*EXP(3.015*mu) =0.66321
Coefficient Cx1=2.23-1.49*mu+1.39*EXP(-18.33*mu) =1.2978
Coefficient Cx2=0.73-1.58*mu+2.91*EXP(-6.33*mu) =-0.20308
Coefficient Cy0=-2.11+1.977*mu+0.0076*EXP(6.530*mu) =-0.4211
Coefficient Cy1=10.108-7.408*mu-10.108*EXP(-1.364*mu) =1.1675
Coefficient Cy2=0 =0

Serviceability limit state stress check - EC3 Part 6, Section 7.5

Global shear stress vEd=VzEd*10^3/(h*tw)=15.41 N/mm²
Shear resistance (exp. 7.2b) vRd=fy/(SQR(3)*gamMs)=144.34 N/mm²
As vEd ≤ vRd (15.41 N/mme ≤ 144.34 N/mm²), shear stress OK.
Hence expression 7.2e is satisfied.

Combined bending and torsion check - EC3 Part 6, Annex A

Factored horizontal force WH1=2.247 kN
Total minor axis design moment MzEd=MzEd1+MzEd2=1.9106 kNm
Design warping torsional moment MwEd=0.44101 kNm
Minor axis resistance moment MzRd=fy*Welz/10^3=9.6331 kNm
Warping torsional resist. moment MwRd=MzRd/2=4.8165 kNm

$$\frac{MyEd}{MbRd} + \frac{Cmz.MzEd}{MzRd} + \frac{kw.kzw.ka.MwEd}{MwRd/gamM1} \leq 1$$

Unity factor uf=MyEd/MbRd+Cmz*MzEd/MzRd+kw*kzw*ka*MwEd/MwRd=0.56197
≤ 1
Hence the unity relationship is satisfied.

Check for deflection - EC6 Part 6, Section 7.3

Vertical deflection (payload) DEL1=D2=1.1007 mm
Vertical deflection (total load) DEL2=D1+D2=1.1355 mm
Since DEL1 ≤ DELl1 (1.1007 mm ≤ 6 mm), deflection OK.
Since DEL2 ≤ DELl2 (1.1355 mm ≤ 5 mm), deflection OK.

Vibration of bottom flange

The slenderness ratio of the bottom flange L/iz should be limited to 250, where iz is the radius of gyration of the bottom flange and L is the distance between lateral restraints. For simplicity, the inertia of the bottom flange will be taken as half of Iz.
Bottom flange inertia Izf=Iz/2*1E4=895000 mm⁴
Radius of gyration of the flange iz=SQR(Izf/(b*tf))=29.593 mm
Slenderness of bottom flange sbf=L*1E3/iz=101.38
As slenderness of bottom flange is ≤ 250 vibration is satisfactory.

DESIGN SUMMARY

Section size	**260 x 102 x 28 UKB**
Beam actual span	**3 m**
Beam effective length	**3.6 m**
Trolley capacity	**14.7 kN**
Beam S.W.L.	**14.7 kN**
Hoist type	**Hand operated.**
Dynamic factor	**1.1**
Total load vertical deflection	**1.03 mm (without dynamic effects)**
Total load vertical deflection	**1.14 mm (with dynamic effects)**
Total load limiting deflection	**5 mm**
Bending and torsion interaction	**0.562 ≤ 1**

NOTE: The runway beam under consideration is suspended.
Longitudinal & transverse bending, shear and deflection are OK.
Runway beam to be clearly marked for S.W.L. of 14.7 kN.

Location: Default example

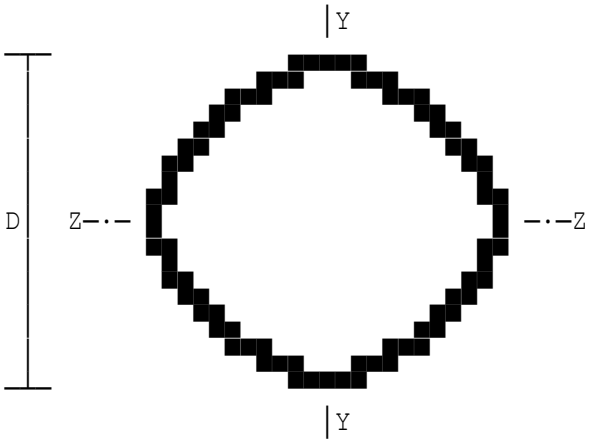

Stainless steel CHS

Calculations in accordance with BS5950-1:2000 and SCI publication "Structural Design of Stainless Steel"

All loads and moments are factored

Factored moment about z-z axis	Mz=5.04 kNm
Factored SF in y direction	Fv=5.6 kN
Axial load (comp. positive)	F=298 kN
Length of member	L=3.6 m
Factored moment about axis yy	My=0 kNm
168.3 O.D x 5 Circular Hollow Section	
Young's Modulus	E=200 kN/mm²
Length between restraints z axis	Lz=3600 mm
Length between restraints y axis	Ly=1800 mm
Limiting slenderness	Lamo=0.4
Quarter point	m2=0 kNm
Mid-span	m3=5.04 kNm
Three quarter point	m4=0 kNm
Quarter point	mz2=0 kNm
Mid-span	mz3=5.04 kNm
Three quarter point	mz4=0 kNm
Maximum moment on central half	M24=5.04 kNm

CIRCULAR HOLLOW SECTION & DESIGN SUMMARY	**168.3 mm O.D. x 5 mm CHS Grade 1.4404 Section is satisfactory for bending axial load, local capacity and overall buckling check.**
	Axial load 298 kN
	Compression resistance 508.99 kN
	Maximum moment z-axis 5.04 kNm
	Moment capacity 29.343 kNm
	Local capacity check 0.69983 ≤ 1
	Overall buckling checks 0.76567 ≤ 1
	0.70571 ≤ 1

Location: Tensile load and moment about one axis

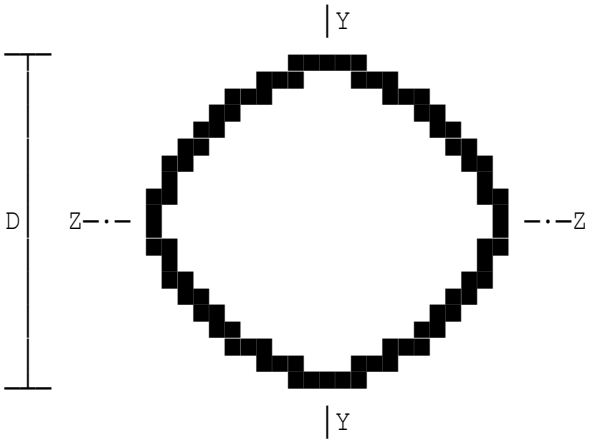

Stainless steel CHS

Calculations in accordance with BS5950-1:2000 and SCI publication "Structural Design of Stainless Steel"

All loads and moments are factored

Factored moment about z-z axis	Mz=5.04 kNm
Factored SF in y direction	Fv=5.6 kN
Axial load (comp. positive)	F=-400 kN
Length of member	L=3.6 m
Factored moment about axis yy	My=0 kNm

TENSILE LOAD APPLIED
168.3 O.D x 5 Circular Hollow Section

Young's Modulus	E=200 kN/mm²
Estimated net area (tension)	Ae=25.6 cm²

CIRCULAR HOLLOW SECTION & DESIGN SUMMARY	**168.3 mm O.D. x 5 mm CHS Grade 1.4404**
	Section is satisfactory for bending axial load, local capacity and overall buckling check.
	Axial load **-400 kN**
	Tensile capacity **563.2 kN**
	Maximum moment z-axis **5.04 kNm**
	Moment capacity **29.343 kNm**
	Local capacity check **0.88199 ≤ 1**

Location: Biaxial bending

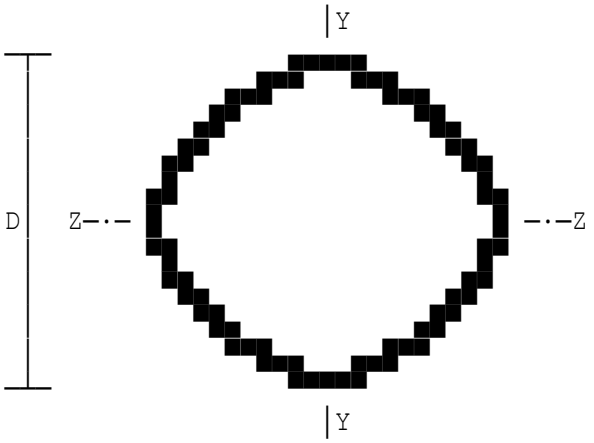

Stainless steel CHS

Calculations in accordance with BS5950-1:2000 and SCI publication "Structural Design of Stainless Steel"

All loads and moments are factored

Factored moment about z-z axis	Mz=47 kNm
Factored SF in y direction	Fv=46 kN
Axial load (comp. positive)	F=48 kN
Length of member	L=6 m
Factored moment about axis yy	My=18 kNm
219.1 O.D x 5 Circular Hollow Section	
Young's Modulus	E=200 kN/mm²

Length between restraints z axis	Lz=6000 mm
Length between restraints y axis	Ly=6000 mm
Limiting slenderness	Lamo=0.4
Far end BM	betaM=0 kNm
Maximum moment on segment	Mz=47 kNm
Far end BM	betaMz=0 kNm
Far end BM	betaMy=0 kNm
Far end BM	betay=0 kNm

CIRCULAR HOLLOW SECTION & DESIGN SUMMARY

219.1 mm O.D. x 5 mm CHS Grade 1.4362
Section is satisfactory for bending axial load, local capacity and overall buckling check.

Axial load	**48 kN**
Compression resistance	**825.94 kN**
Maximum moment z-axis	**47 kNm**
Moment capacity	**70.399 kNm**
Maximum moment y-axis	**18 kNm**
Moment capacity	**70.399 kNm**
Local capacity check	**0.95899 ≤ 1**
Overall buckling checks	**0.6121 ≤ 1**
	0.6121 ≤ 1

Location: Ex1 - Default example

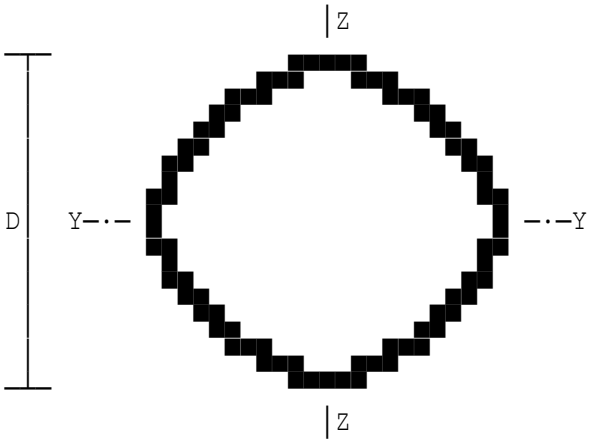

Stainless steel CHS

Calculations in accordance with the SCI publication entitled "Design Manual For Structural Stainless Steel" (Third Edition) 18 April 2006. All loads and moments are factored.

Design moment about y-y axis	MyEd=5.04 kNm
Design shear force in z-direction	VzEd=5.6 kN
Design axial load (comp.positive)	NEd=298 kN
Length of member	L=3.6 m
Design moment about z-z axis	MzEd=0 kNm
168.3 x 5 thick CHS	
Young's Modulus	E=200 kN/mm²
Length between restraints yy axis	Ly=3600 mm
Length between restraints zz axis	Lz=1800 mm

CIRCULAR HOLLOW SECTION DESIGN SUMMARY

168.3 mm x 5 mm CHS Grade 1.4404
Section is satisfactory for bending axial load, local capacity and overall buckling check.

Design axial load	**298 kN**
Compression resistance	**415.17 kN**
Maximum moment y-y axis	**5.04 kNm**
Moment resistance	**26.675 kNm**
Overall buckling checks	**0.94451 ≤ 1**
	0.90673 ≤ 1

Location: Ex2 - Tensile load and moment about one axis

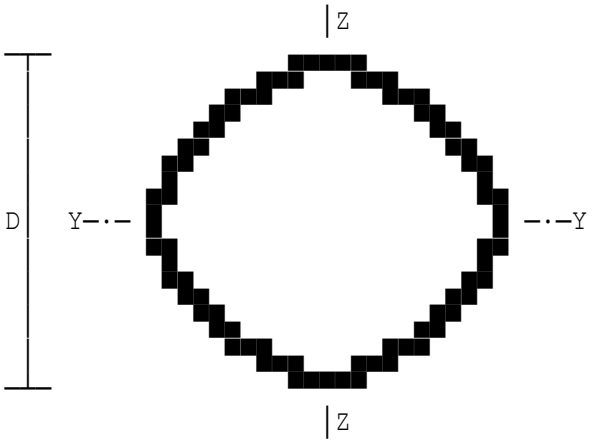

Stainless steel CHS

Calculations in accordance with the SCI publication entitled "Design Manual For Structural Stainless Steel" (Third Edition) 18 April 2006. All loads and moments are factored.

Design moment about y-y axis	MyEd=5.04 kNm
Design shear force in z-direction	VzEd=5.6 kN
Design axial load (comp.positive)	NEd=-400 kN
Length of member	L=3.6 m
Design moment about z-z axis	MzEd=0 kNm
168.3 x 5 thick CHS	
Young's Modulus	E=200 kN/mm²
Estimated net area (tension)	Ae=25.6 cm²

CIRCULAR HOLLOW SECTION DESIGN SUMMARY

168.3 mm x 5 mm CHS Grade 1.4404
Section is satisfactory for bending axial load, local capacity and overall buckling check.

Design axial load	**-400 kN**
Tensile resistance	**512 kN**
Maximum moment y-y axis	**5.04 kNm**
Moment resistance	**26.675 kNm**
Unity factor	**0.97019 ≤ 1**

Location: Ex3 - Biaxial bending

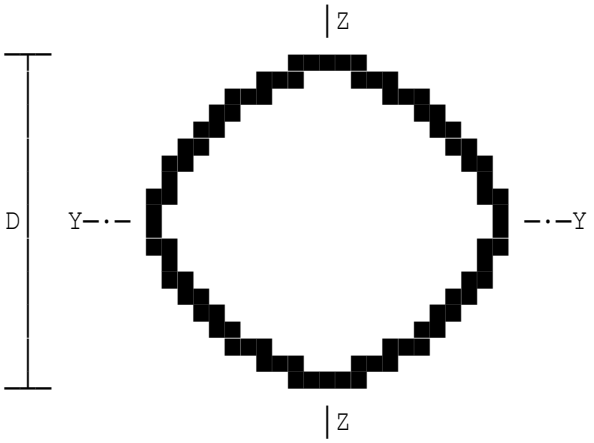

Stainless steel CHS

Calculations in accordance with the SCI publication entitled "Design Manual For Structural Stainless Steel" (Third Edition) 18 April 2006. All loads and moments are factored.

Design moment about y-y axis	MyEd=47 kNm
Design shear force in z-direction	VzEd=46 kN
Design axial load (comp.positive)	NEd=48 kN
Length of member	L=6 m
Design moment about z-z axis	MzEd=2 kNm
219.1 x 5 thick CHS	
Young's Modulus	E=200 kN/mm²
Length between restraints yy axis	Ly=6000 mm
Length between restraints zz axis	Lz=6000 mm

WARNING:
As D/t > 90e^2 (43.789), the section is Class 4 slender. With this class section, local buckling will occur before the attainment of yield stress in one or more parts of the cross-section and this is beyond the scope of this proforma.

Location: Ex4 - Axial load only

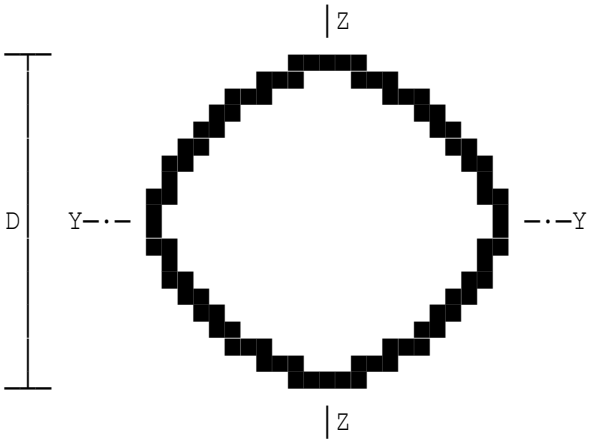

Stainless steel CHS

Calculations in accordance with the SCI publication entitled "Design Manual For Structural Stainless Steel" (Third Edition) 18 April 2006. All loads and moments are factored.

Design moment about y-y axis	MyEd=0 kNm
Design shear force in z-direction	VzEd=0 kN
Design axial load (comp.positive)	NEd=250 kN
Length of member	L=3.5 m
Design moment about z-z axis	MzEd=0 kNm
159 x 4 thick CHS	
Young's Modulus	E=200 kN/mm²
Length between restraints yy axis	Ly=3500 mm
Length between restraints zz axis	Lz=3500 mm

CIRCULAR HOLLOW SECTION	**159 mm x 4 mm CHS Grade 1.4401**
SECTION	**Section is satisfactory for load**
	Design axial load 250 kN
	Compression resistance 288.54 kN

Location: Example 6 'Structural Design of Stainless Steel'

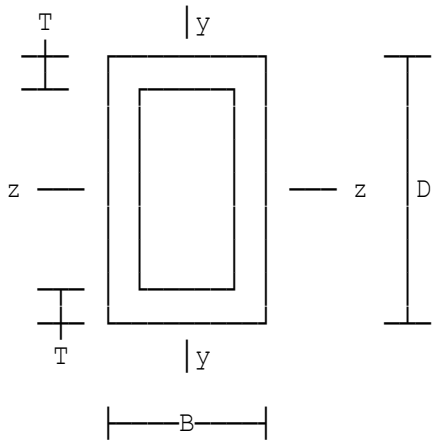

Stainless Steel Section

Structural Hollow Section Design

Calculations in accordance with BS5950-1:2000 and SCI publication 'Structural Design of Stainless steel'

All loads and moments are factored.

Factored bending moment axis zz	Mz=2.74 kNm
Factored SF in y direction	Fv=1 kN
Axial load (comp. positive)	F=19.6 kN
Length of member	L=2.7 m
Factored bending moment axis y-y	My=0 kNm
100 x 50 x 6 RHS	
Length between restraints z axis	Lz=2700 mm
Length between restraints y axis	Ly=2700 mm
Young's Modulus	E=200 kN/mm²
Limiting slenderness	Lamo=0.4
Far end BM	betaM=0 kNm
Maximum moment on segment	Mz=2.74 kNm
Far end BM	betaMz=0 kNm
Dist. betwn torsional restraints	LT=2.7 m

SQUARE HOLLOW SECTION	**100 x 50 x 6 SHS Grade S 1.4401**	
SECTION	**Section is satisfactory for axial**	
SUMMARY	**load, and overall buckling check.**	
	Axial load	**19.6 kN**
	Compression resistance	**109.03 kN**
	Maximum moment z axis	**2.74 kNm**
	Moment capacity	**9.625 kNm**
	Local capacity check	**0.34407 ≤ 1**
	Overall buckling checks	**0.40913 ≤ 1**
		0.35057 ≤ 1

Location: Slender section bending about major axis only

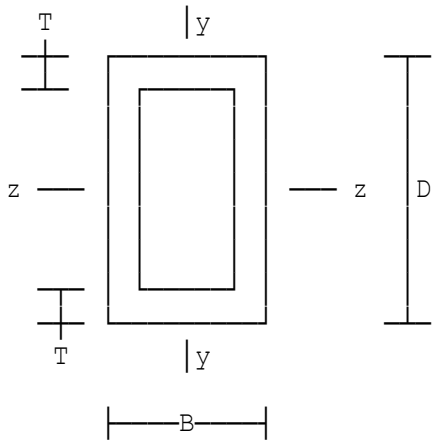

Stainless Steel Section

Structural Hollow Section Design

Calculations in accordance with BS5950-1:2000 and SCI publication 'Structural Design of Stainless steel'

All loads and moments are factored.

Factored bending moment axis zz	Mz=77.4 kNm
Factored SF in y direction	Fv=18 kN
Axial load (comp. positive)	F=1100 kN
Length of member	L=4 m
Factored bending moment axis y-y	My=0 kNm
400 x 200 x 6 RHS	
Length between restraints z axis	Lz=4000 mm
Length between restraints y axis	Ly=4000 mm
Young's Modulus	E=200 kN/mm²
Limiting slenderness	Lamo=0.4
Dist. betwn torsional restraints	LT=4 m

SQUARE HOLLOW SECTION	**400 x 200 x 6 SHS Grade S 1.4462**	
SECTION	**Section is satisfactory for axial**	
SUMMARY	**load, and overall buckling check.**	
	Axial load	**1100 kN**
	Compression resistance	**1808.9 kN**
	Maximum moment z axis	**77.4 kNm**
	Moment capacity	**293.42 kNm**
	Local capacity check	**0.8324 ≤ 1**
	Overall buckling checks	**0.89674 ≤ 1**
		0.89674 ≤ 1

Location: Slender section bending about minor axis only

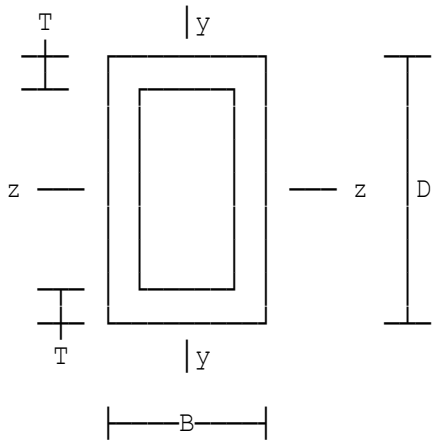

Stainless Steel Section

Structural Hollow Section Design

Calculations in accordance with BS5950-1:2000 and SCI publication 'Structural Design of Stainless steel'

All loads and moments are factored.

Factored bending moment axis zz	Mz=0 kNm
Factored SF in y direction	Fv=18 kN
Axial load (comp. positive)	F=900 kN
Length of member	L=4 m
Factored bending moment axis y-y	My=24 kNm
400 x 200 x 6 RHS	
Length between restraints z axis	Lz=4000 mm
Length between restraints y axis	Ly=4000 mm
Young's Modulus	E=200 kN/mm²
Limiting slenderness	Lamo=0.4

SQUARE HOLLOW SECTION	**400 x 200 x 6 SHS Grade S 1.4462**	
SECTION	**Section is satisfactory for axial**	
SUMMARY	**load, and overall buckling check.**	
	Axial load	**900 kN**
	Compression resistance	**2125.1 kN**
	Maximum moment y axis	**24 kNm**
	Moment capacity	**134.75 kNm**
	Local capacity check	**0.68572 ≤ 1**

Location: bi-axial bending - slender z-z axis

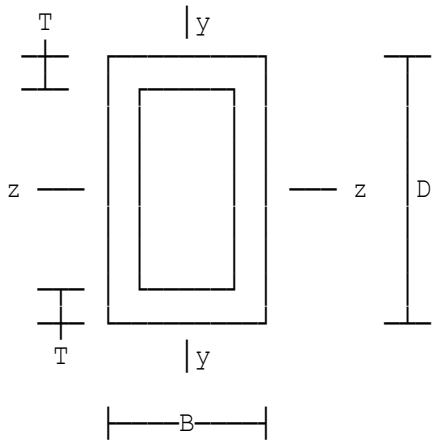

Stainless Steel Section

Structural Hollow Section Design

Calculations in accordance with BS5950-1:2000 and SCI publication 'Structural Design of Stainless steel'

All loads and moments are factored.

Factored bending moment axis zz	Mz=56 kNm
Factored SF in y direction	Fv=8 kN
Axial load (comp. positive)	F=800 kN
Length of member	L=4 m
Factored bending moment axis y-y	My=20 kNm
400 x 200 x 6 RHS	
Length between restraints z axis	Lz=4000 mm
Length between restraints y axis	Ly=4000 mm
Young's Modulus	E=200 kN/mm²
Limiting slenderness	Lamo=0.4
Dist. betwn torsional restraints	LT=4 m

SQUARE HOLLOW SECTION	**400 x 200 x 6 SHS Grade S 1.4462**	
SECTION	**Section is satisfactory for axial**	
SUMMARY	**load, and overall buckling check.**	
	Axial load	**800 kN**
	Compression resistance	**1760.5 kN**
	Maximum moment z axis	**56 kNm**
	Moment capacity	**273.65 kNm**
	Maximum moment y axis	**20 kNm**
	Moment capacity	**129.29 kNm**
	Local capacity check	**0.79771 ≤ 1**
	Overall buckling checks	**0.84289 ≤ 1**
		0.84289 ≤ 1

Location: Bi-axial bending - slender section both axes

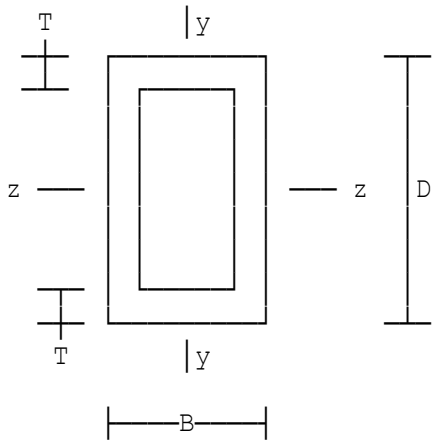

Stainless Steel Section

Structural Hollow Section Design

Calculations in accordance with BS5950-1:2000 and SCI publication 'Structural Design of Stainless steel'

All loads and moments are factored.

Factored bending moment axis zz	Mz=110 kNm
Factored SF in y direction	Fv=21 kN
Axial load (comp. positive)	F=20 kN
Length of member	L=4 m
Factored bending moment axis y-y	My=100 kNm
400 x 200 x 6 RHS	
Length between restraints z axis	Lz=4000 mm
Length between restraints y axis	Ly=4000 mm
Young's Modulus	E=200 kN/mm²
Limiting slenderness	Lamo=0.4
Far end BM	betaM=-55 kNm
Maximum moment on segment	Mz=110 kNm
Far end BM	betaMz=-55 kNm
Maximum moment on segment	My=100 kNm
Far end BM	betaMy=-50 kNm
Dist. betwn torsional restraints	LT=4 m

SQUARE HOLLOW SECTION	**400 x 200 x 6 SHS Grade S 1.4462**	
SECTION	**Section is satisfactory for axial**	
SUMMARY	**load, and overall buckling check.**	
	Axial load	**20 kN**
	Compression resistance	**2888.8 kN**
	Maximum moment z axis	**110 kNm**
	Moment capacity	**321.27 kNm**
	Maximum moment y axis	**100 kNm**
	Moment capacity	**220.22 kNm**
	Local capacity check	**0.80329 ≤ 1**
	Overall buckling checks	**0.40529 ≤ 1**
		0.38474 ≤ 1

Location: Ex1 - 'Structural Design of Stainless Steel'

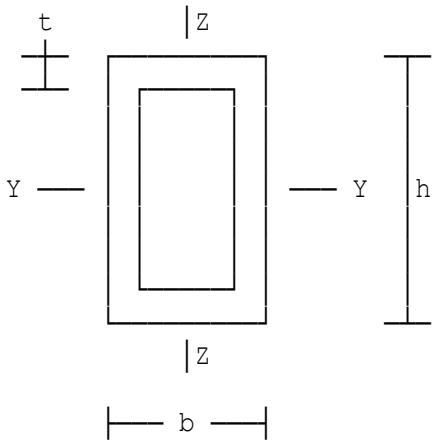

Stainless Steel Structural

Hollow Section Design to EC3

Calculations in accordance with the SCI publication entitled 'Design Manual For Structural Stainless steel' (Third Edition) dated 18th April 2006.

Loads and moments are factored.

Design moment about y-y axis	MyEd=2.74 kNm
Design shear force in z direction	VzEd=1 kN
Design axial load (comp.positive)	NEd=19.6 kN
Length of member	L=2.7 m
Design moment about z-z axis	MzEd=0 kNm
100 x 50 x 6 RHS	
Length between restraints yy-axis	Ly=2700 mm
Length between restraints zz-axis	Lz=2700 mm
Young's Modulus	E=200 kN/mm²

SQUARE HOLLOW SECTION	**100 x 50 x 6 SHS Grade S 1.4401**	
SECTION	**Section is satisfactory for axial**	
SUMMARY	**load, and overall buckling check.**	
	Design axial load	**19.6 kN**
	Compression resistance	**95.104 kN**
	Design moment y-y axis	**2.74 kNm**
	Moment resistance	**8.75 kNm**
	Overall buckling checks	**0.58186 ≤ 1**
		0.51923 ≤ 1

Location: Ex2 - Bending about major axis only

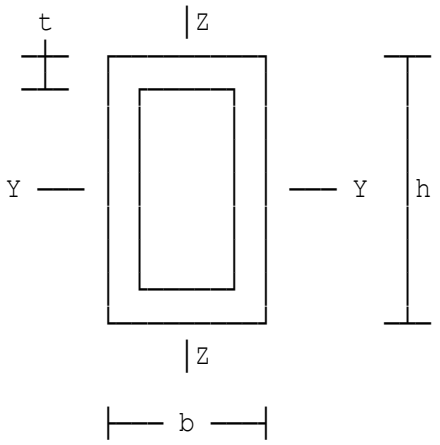

Stainless Steel Structural

Hollow Section Design to EC3

Calculations in accordance with the SCI publication entitled 'Design Manual For Structural Stainless steel' (Third Edition) dated 18th April 2006.

Loads and moments are factored.

Design moment about y-y axis	MyEd=77.4 kNm
Design shear force in z direction	VzEd=18 kN
Design axial load (comp.positive)	NEd=1100 kN
Length of member	L=4 m
Design moment about z-z axis	MzEd=0 kNm
250 x 150 x 15 RHS	
Length between restraints yy-axis	Ly=4000 mm
Length between restraints zz-axis	Lz=4000 mm
Young's Modulus	E=200 kN/mm²

SQUARE HOLLOW SECTION	**250 x 150 x 15 SHS Grade S 1.4462**	
SECTION	**Section is satisfactory for axial**	
SUMMARY	**load, and overall buckling check.**	
	Design axial load	**1100 kN**
	Compression resistance	**2132.2 kN**
	Design moment y-y axis	**77.4 kNm**
	Moment resistance	**322.71 kNm**
	Overall buckling checks	**0.80371 ≤ 1**
		0.75574 ≤ 1

Location: Ex3 - Bending about minor axis only

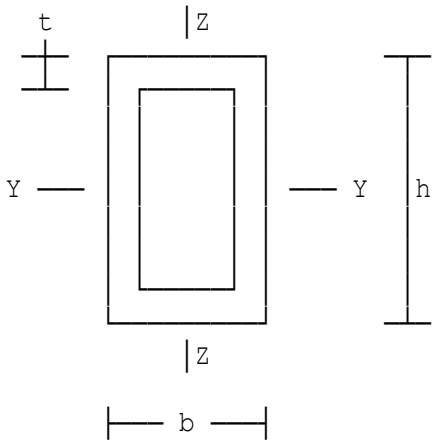

Stainless Steel Structural

Hollow Section Design to EC3

Calculations in accordance with the SCI publication entitled 'Design Manual For Structural Stainless steel' (Third Edition) dated 18th April 2006.

Loads and moments are factored.

Design moment about y-y axis	MyEd=0 kNm
Design shear force in z direction	VzEd=18 kN
Design axial load (comp.positive)	NEd=900 kN
Length of member	L=4 m
Design moment about z-z axis	MzEd=24 kNm
350 x 200 x 15 RHS	
Length between restraints yy-axis	Ly=4000 mm
Length between restraints zz-axis	Lz=4000 mm
Young's Modulus	E=200 kN/mm²

SQUARE HOLLOW SECTION	**350 x 200 x 15 SHS Grade S 1.4462**
SECTION	**Section is satisfactory for axial**
SUMMARY	**load, and overall buckling check.**
	Design axial load 900 kN
	Compression resistance 4174.9 kN
	design moment z-z axis 24 kNm
	Moment resistance 456.65 kNm

Location: Ex4 - Bi-axial bending

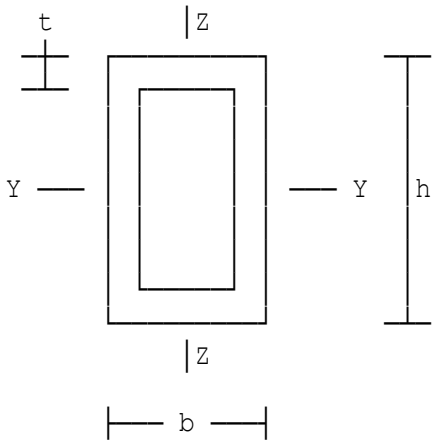

Stainless Steel Structural

Hollow Section Design to EC3

Calculations in accordance with the SCI publication entitled 'Design Manual For Structural Stainless steel' (Third Edition) dated 18th April 2006.

Loads and moments are factored.

Design moment about y-y axis	MyEd=56 kNm
Design shear force in z direction	VzEd=8 kN
Design axial load (comp.positive)	NEd=800 kN
Length of member	L=4 m
Design moment about z-z axis	MzEd=20 kNm
350 x 200 x 15 RHS	
Length between restraints yy-axis	Ly=4000 mm
Length between restraints zz-axis	Lz=4000 mm
Young's Modulus	E=200 kN/mm²

SQUARE HOLLOW SECTION	**350 x 200 x 15 SHS Grade S 1.4462**	
SECTION	**Section is satisfactory for axial**	
SUMMARY	**load, and overall buckling check.**	
	Design axial load	**800 kN**
	Compression resistance	**4174.9 kN**
	Design moment y-y axis	**56 kNm**
	Moment resistance	**670.76 kNm**
	design moment z-z axis	**20 kNm**
	Moment resistance	**456.65 kNm**
	Overall buckling checks	**0.34436 ≤ 1**
		0.32766 ≤ 1

Location: Ex5 - Bi-axial bending

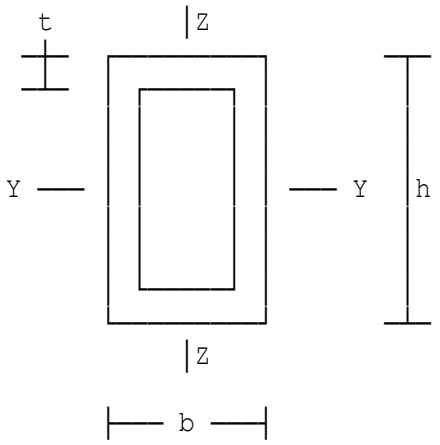

Stainless Steel Structural

Hollow Section Design to EC3

Calculations in accordance with the SCI publication entitled 'Design Manual For Structural Stainless steel' (Third Edition) dated 18th April 2006.

Loads and moments are factored.

Design moment about y-y axis	MyEd=110 kNm
Design shear force in z direction	VzEd=21 kN
Design axial load (comp.positive)	NEd=20 kN
Length of member	L=4 m
Design moment about z-z axis	MzEd=100 kNm
350 x 200 x 15 RHS	
Length between restraints yy-axis	Ly=4000 mm
Length between restraints zz-axis	Lz=4000 mm
Young's Modulus	E=200 kN/mm²

SQUARE HOLLOW SECTION	**350 x 200 x 15 SHS Grade S 1.4462**	
SECTION	**Section is satisfactory for axial**	
SUMMARY	**load, and overall buckling check.**	
	Design axial load	**20 kN**
	Compression resistance	**5023 kN**
	Design moment y-y axis	**110 kNm**
	Moment resistance	**670.76 kNm**
	design moment z-z axis	**100 kNm**
	Moment resistance	**456.65 kNm**
	Overall buckling checks	**0.46355 ≤ 1**
		0.43075 ≤ 1

Location: Ex6 - SCI Design Manual For Struct. Stainless Steel' Ex10

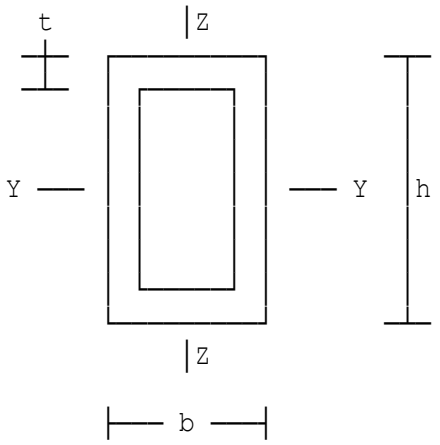

Stainless Steel Structural

Hollow Section Design to EC3

Calculations in accordance with the SCI publication entitled 'Design Manual For Structural Stainless steel' (Third Edition) dated 18th April 2006.

Loads and moments are factored.

Design moment about y-y axis	MyEd=2.6 kNm
Design shear force in z direction	VzEd=1 kN
Design axial load (comp.positive)	NEd=18.6 kN
Length of member	L=2.7 m
Design moment about z-z axis	MzEd=0 kNm
100 x 50 x 6 RHS	
Length between restraints yy-axis	Ly=2700 mm
Length between restraints zz-axis	Lz=2700 mm
Young's Modulus	E=200 kN/mm²

SQUARE HOLLOW SECTION	**100 x 50 x 6 SHS Grade S 1.4401**	
SECTION	**Section is satisfactory for axial**	
SUMMARY	**load, and overall buckling check.**	
	Design axial load	**18.6 kN**
	Compression resistance	**95.104 kN**
	Design moment y-y axis	**2.6 kNm**
	Moment resistance	**8.75 kNm**
	Overall buckling checks	**0.55215 ≤ 1**
		0.49272 ≤ 1

Location: Unrestrained channel based on example 2

Simply supported stainless steel beam

```
╔═══════════════════════╗
╚═══════════════════════╝
^                       ^
|                       |
<———————— L ————————>
```

Calculations in accordance with BS5950-1: 2000 and SCI publication "Structural Design of Stainless Steel"

Beam span	L=6 m
200 x 75 x 8 Channel	
Young's Modulus	E=200 kN/mm²
Dead load factor	gamd=1.4
Imposed load factor	gami=1.6
Distance from left support	Lc(1)=2 m
Unfactored dead load	Gkc(1)=0.4 kN
Unfactored imposed load	Qkc(1)=0 kN
Distance from left support	Lc(2)=4 m
Unfactored dead load	Gkc(2)=0.4 kN
Unfactored imposed load	Qkc(2)=0 kN
Dist. from left support to start	Lau(1)=0 m
Distance from left support to end	Lbu(1)=6 m
Unfactored dead load	Gku(1)=0.196 kN/m
Unfactored imposed load	Qku(1)=3.85 kN/m
Length of beam between restraints	LT=2 m
Maximum end moment on segment	Me=27 kNm
Start of segment	m1=27 kNm
Quarter point	m2=29 kNm
Mid-span	m3=30.435 kNm
Three quarter point	m4=29 kNm
Emissivity	er=0.5
Assumed value of load ratio	R=0.5

Since Mf > Mb0 (15.037 kNm > 10.437 kNm) applied moment exceeds buckling resistance moment. Addition fire resistance is required

DESIGN SUMMARY

CHANNEL	**Stainless Steel Section**	
	200 x 75 x 8 Grade 1.4401	
	Max. shear force	**19.863 kN**
	Shear capacity	**211.2 kN**
	Max. applied moment	**30.075 kNm**
	Moment capacity	**36.564 kNm**
	Buckling resistance	**31.209 kNm**
	Moment factor (mLT)	**0.99527**
	Resistance (Mb/mLT)	**31.358 kNm**
	Unfactored DL defln	**2.6408 mm**
	Unfactored LL defln	**26.916 mm**
	Limiting deflection	**30 mm**
Unfactored end shears	**DL shear at LHE**	**0.988 kN**
	LL shear at LHE	**11.55 kN**
	DL shear at RHE	**0.988 kN**
	LL shear at RHE	**11.55 kN**

FIRE RESISTANCE SUMMARY

Heated perimeter	**684 mm²**
Area of section	**25.3 cm²**
Ratio (Hp/A)	**270**
Assumed Load Ratio	**0.5**

Section does not have an inherent fire resistance of 30 minutes.

Location: Slender channel

Simply supported stainless steel beam

```
╔═══════════════════════╗
╚═══════════════════════╝
^                       ^
|                       |
<———————— L ————————>
```

Calculations in accordance with BS5950-1: 2000 and SCI publication "Structural Design of Stainless Steel"

Beam span	L=4 m
300 x 100 x 8 Channel	
Young's Modulus	E=200 kN/mm²
Dead load factor	gamd=1.4
Imposed load factor	gami=1.6
Dist. from left support to start	Lau(1)=0 m
Distance from left support to end	Lbu(1)=4 m
Unfactored dead load	Gku(1)=7 kN/m
Unfactored imposed load	Qku(1)=10 kN/m

DESIGN SUMMARY

CHANNEL	**Stainless Steel Section**	
	300 x 100 x 8 Grade 1.4301	
	Max. shear force	**51.6 kN**
	Shear capacity	**302.4 kN**
	Max. applied moment	**51.6 kNm**
	Moment capacity	**64.718 kNm**
	Buckling resistance	**48.632 kNm**
	Moment factor (mLT)	**0.925**
	Resistance (Mb/mLT)	**52.575 kNm**
	Unfactored DL defln	**2.6662 mm**
	Unfactored LL defln	**3.8089 mm**
	Limiting deflection	**20 mm**
Unfactored end shears	**DL shear at LHE**	**14 kN**
	LL shear at LHE	**20 kN**
	DL shear at RHE	**14 kN**
	LL shear at RHE	**20 kN**

Location: Slender rhs

Simply supported stainless steel beam

```
╔═══════════════════════╗
╚═══════════════════════╝
^                       ^
|                       |
<———————— L ————————>
```

Calculations in accordance with BS5950-1: 2000 and SCI publication "Structural Design of Stainless Steel"

Beam span L=6 m

400 x 200 x 6 RHS
Young's Modulus E=200 kN/mm²

Dead load factor gamd=1.4
Imposed load factor gami=1.6

Dist. from left support to start Lau(1)=0 m
Distance from left support to end Lbu(1)=6 m
Unfactored dead load Gku(1)=15 kN/m
Unfactored imposed load Qku(1)=19 kN/m
Full lateral restraint provided to compression flange

DESIGN SUMMARY

	Stainless Steel Section	
RECTANGULAR HOLLOW SECTION	**400 x 200 x 6 RHS Grade 1.4362**	
	Max. shear force	**154.2 kN**
	Shear capacity	**1104 kN**
	Max. applied moment	**231.3 kNm**
	Moment capacity	**271.35 kNm**
	Unfactored DL defln	**9.3926 mm**
	Unfactored LL defln	**11.897 mm**
	Limiting deflection	**30 mm**
Unfactored end shears	**DL shear at LHE**	**45 kN**
	LL shear at LHE	**57 kN**
	DL shear at RHE	**45 kN**
	LL shear at RHE	**57 kN**

Location: slender back to back channels

Simply supported stainless steel beam

```
╔═══════════════════════╗
╚═══════════════════════╝
^                       ^
|                       |
<———————— L ————————>
```

Calculations in accordance with BS5950-1: 2000 and SCI publication "Structural Design of Stainless Steel"

Beam span L=6 m

400 x 150 x 8 Channel
Young's Modulus E=200 kN/mm²

Dead load factor gamd=1.4
Imposed load factor gami=1.6

Dist. from left support to start Lau(1)=0 m
Distance from left support to end Lbu(1)=6 m
Unfactored dead load Gku(1)=8 kN/m
Unfactored imposed load Qku(1)=12 kN/m
Full lateral restraint provided to compression flange
Emissivity er=0.5
Assumed value of load ratio R=0.5

DESIGN SUMMARY

DOUBLE CHANNEL	**Stainless Steel Section**	
	2No/400 x 150 x 8 Grade 1.4401	
	Back to back	
	Max. shear force	**91.2 kN**
	Shear capacity	**844.8 kN**
	Max. applied moment	**136.8 kNm**
	Moment capacity	**235.04 kNm**
	Unfactored DL defln	**2.7176 mm**
	Unfactored LL defln	**4.0763 mm**
	Limiting deflection	**30 mm**
Unfactored end shears	**DL shear at LHE**	**24 kN**
	LL shear at LHE	**36 kN**
	DL shear at RHE	**24 kN**
	LL shear at RHE	**36 kN**
FIRE RESISTANCE SUMMARY	**Heated perimeter**	**1834 mm²**
	Area of section	**106.6 cm²**
	Ratio (Hp/A)	**170**
	Assumed Load Ratio	**0.5**
	Section has an inherent fire resistance of 30 minutes.	

Location: slender rhs bending about y-y axis

Simply supported stainless steel beam

```
╔═══════════════════════╗
╚═══════════════════════╝
^                       ^
|                       |
<———————— L ————————>
```

Calculations in accordance with BS5950-1: 2000 and SCI publication "Structural Design of Stainless Steel"

Beam span L=6 m

150 x 300 x 6 RHS
Young's Modulus E=200 kN/mm²

Dead load factor gamd=1.4
Imposed load factor gami=1.6

Dist. from left support to start Lau(1)=0 m
Distance from left support to end Lbu(1)=6 m
Unfactored dead load Gku(1)=5 kN/m
Unfactored imposed load Qku(1)=7 kN/m
Emissivity er=0.4
Assumed value of load ratio R=0.4
Since Mf > Mct (32.76 kNm > 21.842 kNm) applied moment exceeds moment capacity. Addition fire resistance is required

DESIGN SUMMARY

	Stainless Steel Section	
RECTANGULAR HOLLOW SECTION	**150 x 300 x 6 RHS Grade 1.4462**	
	Max. shear force	**54.6 kN**
	Shear capacity	**469.2 kN**
	Max. applied moment	**81.9 kNm**
	Moment capacity	**89.517 kNm**
	Unfactored DL defln	**21.285 mm**
	Unfactored LL defln	**29.8 mm**
	Limiting deflection	**30 mm**
Unfactored end shears	**DL shear at LHE**	**15 kN**
	LL shear at LHE	**21 kN**
	DL shear at RHE	**15 kN**
	LL shear at RHE	**21 kN**
FIRE RESISTANCE SUMMARY	**Heated perimeter**	**600 mm²**
	Area of section	**51 cm²**
	Ratio (Hp/A)	**115**
	Assumed Load Ratio	**0.4**
	Section does not have an inherent fire resistance of 30 minutes.	

Location: Ex1 - Unrestrained channel

Simply supported stainless steel beam

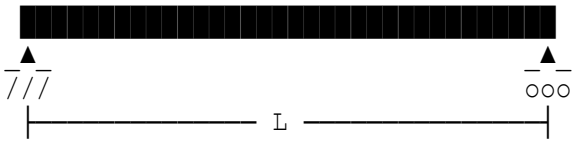

Calculations in accordance with the SCI publication 'Design Manual For Structural Stainless Steel' Third Edition dated 18th April 2006.

Beam span	L=6 m
200 x 75 x 8 Channel	
Young's Modulus	E=200 kN/mm²
Permanent load partial factor	gamG=1.35
Variable load partial factor	gamQ=1.5

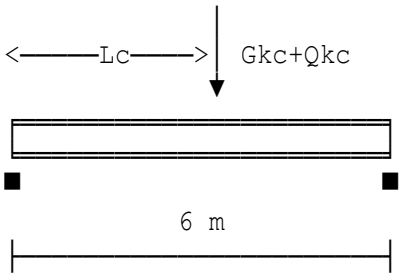

Applied point loads on member

Applied permanent and variable point loads are unfactored and distances are measured from LHS support.

Distance from left support	Lc(1)=2 m
Unfactored permanent load	Gkc(1)=0.4 kN
Unfactored variable load	Qkc(1)=0 kN
Distance from left support	Lc(2)=4 m
Unfactored permanent load	Gkc(2)=0.4 kN
Unfactored variable load	Qkc(2)=0 kN

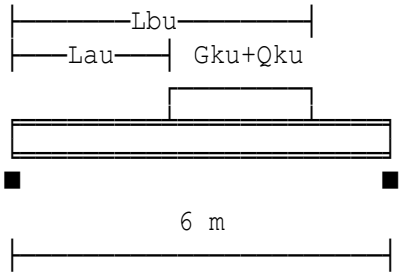

Applied UDL loading on member

Applied permanent and variable UDL loads are unfactored and distances are measured from LHS support.

Dist.from left support to start	Lau(1)=0 m
Distance from left support to end	Lbu(1)=6 m
Unfactored permanent load	Gku(1)=0.196 kN/m
Unfactored variable load	Qku(1)=3.85 kN/m

Effective length parameter	K=1
Length for LTB	LT=2 m
Far end moment	psiM=0 kNm
Imperfection factor	aLT=0.34

	Stainless Steel Section	
CHANNEL	**200 x 75 x 8 Grade 1.4401**	
DESIGN	**Max. shear force**	**18.659 kN**
SUMMARY	**Shear resistance**	**184.75 kN**
	Design bending moment	**28.258 kNm**
	Moment resistance	**33.84 kNm**
	Buckling resistance	**29.949 kNm**
	Perm.load deflection	**2.6191 mm**
	Variable load defln	**26.695 mm**
	Limiting deflection	**30 mm**
Unfactored end shears	**Perm.load shear @ LHE**	**0.988 kN**
	Var.load shear @ LHE	**11.55 kN**
	Perm.load shear @ RHE	**0.988 kN**
	Var.load shear @ RHE	**11.55 kN**

Fire resistance without applied protection

The critical temperature method given in BS EN 1993-1-2 Clause 4.2.4 will be adopted. For further clarification refer to Thomas Telford publication entitled 'Designer's guide to EN 1991-1-2, EN 1992-1-2, EN 1993-1-2 and EN 1994-1-2'.

Factor for variable actions ψ1	psi1=0.7
Max span design bending moment	MyEd=13.81 kNm

Critical temperature of stainless steel

Design moment (fire limit state)	MfiEd=MyEd=13.81 kNm
Design buckling resistance	MbRdfi=ChiLTf*McRd=19.239 kNm
Design moment resistance	MfiRd=ky*(gamM0/gamfi)*MbRdfi/(k1 *k2)=27.484 kNm
Critical temperature θacr	taCR=39.19*LOG(comp-1)+482=583.87 °C
Fire resistance period	18 minutes

FIRE RESISTANCE SUMMARY **The section does not have an inherent fire resistance of 30 minutes. Fire protection should be provided.**

Location: Ex2 - Channel section

Simply supported stainless steel beam

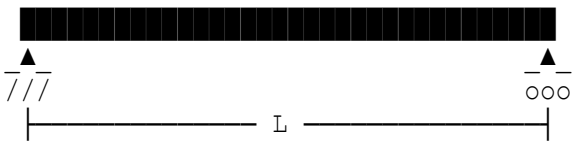

Calculations in accordance with the SCI publication 'Design Manual For Structural Stainless Steel' Third Edition dated 18th April 2006.

Beam span	L=4 m
300 x 100 x 12 Channel	
Young's Modulus	E=200 kN/mm²
Permanent load partial factor	gamG=1.35
Variable load partial factor	gamQ=1.5

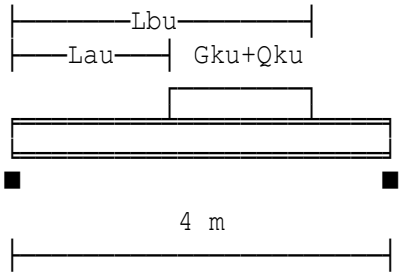

Applied UDL loading on member

Applied permanent and variable UDL loads are unfactored and distances are measured from LHS support.

Dist.from left support to start	Lau(1)=0 m
Distance from left support to end	Lbu(1)=4 m
Unfactored permanent load	Gku(1)=7 kN/m
Unfactored variable load	Qku(1)=10 kN/m
Effective length parameter	K=1
Length for LTB	LT=4 m
Factor	C1=1.13
Imperfection factor	aLT=0.34

CHANNEL DESIGN SUMMARY

	Stainless Steel Section	
	300 x 100 x 12 Grade 1.4301	
	Max. shear force	**48.9 kN**
	Shear resistance	**396.8 kN**
	Design bending moment	**48.9 kNm**
	Moment resistance	**100.8 kNm**
	Buckling resistance	**67.218 kNm**
	Perm.load deflection	**1.8427 mm**
	Variable load defln	**2.6325 mm**
	Limiting deflection	**20 mm**
Unfactored end shears	**Perm.load shear @ LHE**	**14 kN**
	Var.load shear @ LHE	**20 kN**
	Perm.load shear @ RHE	**14 kN**
	Var.load shear @ RHE	**20 kN**

Location: Ex3 - RHS

Simply supported stainless steel beam

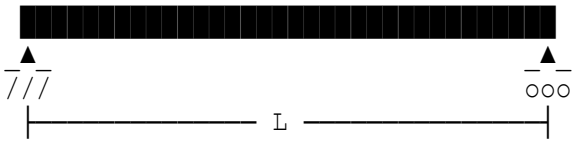

Calculations in accordance with the SCI publication 'Design Manual For Structural Stainless Steel' Third Edition dated 18th April 2006.

Beam span	L=6 m
350 x 200 x 12 RHS	
Young's Modulus	E=200 kN/mm²
Permanent load partial factor	gamG=1.35
Variable load partial factor	gamQ=1.5

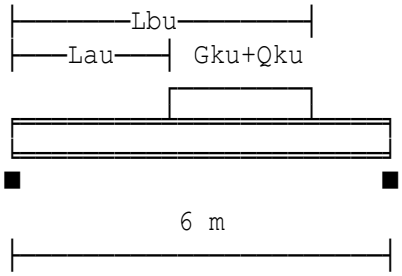

Applied UDL loading on member

Applied permanent and variable UDL loads are unfactored and distances are measured from LHS support.

Dist.from left support to start	Lau(1)=0 m
Distance from left support to end	Lbu(1)=6 m
Unfactored permanent load	Gku(1)=15 kN/m
Unfactored variable load	Qku(1)=19 kN/m
Effective length parameter	K=1
Length for LTB	LT=6 m
Factor	C1=1.13

RECTANGULAR HOLLOW SECTION DESIGN SUMMARY

Stainless Steel Section	
350 x 200 x 12 RHS Grade 1.4462	
Max. shear force	**146.25 kN**
Shear resistance	**1843.7 kN**
Design bending moment	**219.38 kNm**
Moment resistance	**560.78 kNm**
Buckling resistance	**560.78 kNm**
Perm.load deflection	**6.7984 mm**
Variable load defln	**8.6113 mm**
Limiting deflection	**30 mm**
Unfactored end shears	
Perm.load shear @ LHE	**45 kN**
Var.load shear @ LHE	**57 kN**
Perm.load shear @ RHE	**45 kN**
Var.load shear @ RHE	**57 kN**

Location: Ex4 - Back to back channels

Simply supported stainless steel beam

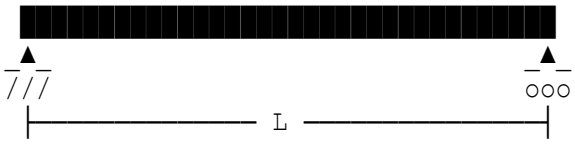

Calculations in accordance with the SCI publication 'Design Manual For Structural Stainless Steel' Third Edition dated 18th April 2006.

Beam span	L=6 m
400 x 150 x 15 Channel	
Young's Modulus	E=200 kN/mm²
Permanent load partial factor	gamG=1.35
Variable load partial factor	gamQ=1.5

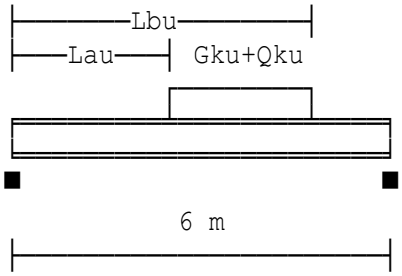

Applied UDL loading on member

Applied permanent and variable UDL loads are unfactored and distances are measured from LHS support.

Dist.from left support to start	Lau(1)=0 m
Distance from left support to end	Lbu(1)=6 m
Unfactored permanent load	Gku(1)=8 kN/m
Unfactored variable load	Qku(1)=12 kN/m
Effective length parameter	K=1
Length for LTB	LT=6 m
Factor	C1=1.13
Imperfection factor	aLT=0.34

DOUBLE CHANNEL

DESIGN SUMMARY

Stainless Steel Section	
2No/400 x 150 x 15 Grade 1.4401	
Back to back channels	
Max. shear force	**86.4 kN**
Shear resistance	**1385.6 kN**
Design bending moment	**129.6 kNm**
Moment resistance	**422 kNm**
Buckling resistance	**331.69 kNm**
Perm.load deflection	**1.5997 mm**
Variable load defln	**2.3995 mm**
Limiting deflection	**30 mm**
Unfactored end shears	
Perm.load shear @ LHE	**24 kN**
Var.load shear @ LHE	**36 kN**
Perm.load shear @ RHE	**24 kN**
Var.load shear @ RHE	**36 kN**

Fire resistance without applied protection

The critical temperature method given in BS EN 1993-1-2 Clause 4.2.4 will be adopted. For further clarification refer to Thomas Telford publication entitled 'Designer's guide to EN 1991-1-2, EN 1992-1-2, EN 1993-1-2 and EN 1994-1-2'.

Factor for variable actions ψ1	psi1=0.7
Max span design bending moment	MyEd=73.8 kNm

Critical temperature of stainless steel

Design moment (fire limit state)	MfiEd=MyEd=73.8 kNm
Design buckling resistance	MbRdfi=McRd=464.2 kNm
Design moment resistance	MfiRd=ky*(gamM0/gamfi)*MbRdfi/(k1 *k2)=663.14 kNm
Critical temperature θacr	taCR=39.19*LOG(comp-1)+482=813.11 °C
Fire resistance period	30 minutes

FIRE RESISTANCE SUMMARY	**Section has an inherent fire resistance of 30 minutes.**

Location: Ex5 - RHS bending about y-y axis

Simply supported stainless steel beam

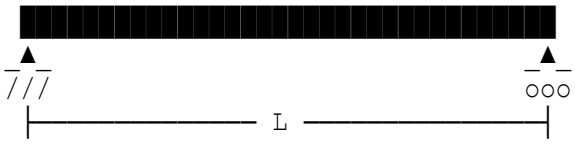

Calculations in accordance with the SCI publication 'Design Manual For Structural Stainless Steel' Third Edition dated 18th April 2006.

Beam span	L=6 m
150 x 300 x 15 RHS	
Young's Modulus	E=200 kN/mm²
Permanent load partial factor	gamG=1.35
Variable load partial factor	gamQ=1.5

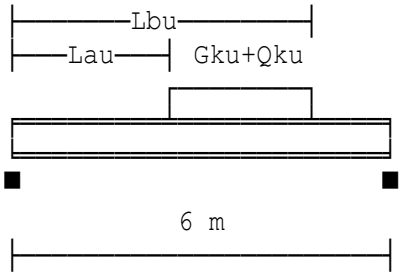

Applied UDL loading on member

Applied permanent and variable UDL loads are unfactored and distances are measured from LHS support.

Dist.from left support to start	Lau(1)=0 m
Distance from left support to end	Lbu(1)=6 m
Unfactored permanent load	Gku(1)=5 kN/m
Unfactored variable load	Qku(1)=7 kN/m

	Stainless Steel Section	
RECTANGULAR HOLLOW SECTION	**150 x 300 x 15 RHS**	**Grade 1.4462**
DESIGN	**Max. shear force**	**51.75 kN**
SUMMARY	**Shear resistance**	**933.56 kN**
	Design bending moment	**77.625 kNm**
	Moment resistance	**269.23 kNm**
	Perm.load deflection	**10.503 mm**
	Variable load defln	**14.704 mm**
	Limiting deflection	**30 mm**
Unfactored end shears	**Perm.load shear @ LHE**	**15 kN**
	Var.load shear @ LHE	**21 kN**
	Perm.load shear @ RHE	**15 kN**
	Var.load shear @ RHE	**21 kN**

Fire resistance without applied protection

The critical temperature method given in BS EN 1993-1-2 Clause 4.2.4 will be adopted. For further clarification refer to Thomas Telford publication entitled 'Designer's guide to EN 1991-1-2, EN 1992-1-2, EN 1993-1-2 and EN 1994-1-2'.

Factor for variable actions ψ1	psi1=0.7
Max span design bending moment	MyEd=44.55 kNm

Critical temperature of stainless steel

Design moment (fire limit state)	MfiEd=MyEd=44.55 kNm
Design buckling resistance	MbRdfi=ChiLTf*McRd=151.68 kNm
Design moment resistance	MfiRd=ky*(gamM0/gamfi)*MbRdfi/(k1 *k2)=216.69 kNm
Critical temperature θacr	taCR=39.19*LOG(comp-1)+482=720.83 °C
Fire resistance period	26 minutes

FIRE RESISTANCE SUMMARY	**The section does not have an inherent fire resistance of 30 minutes. Fire protection should be provided.**

Location: Example based on example 4 of stainless steel pub.

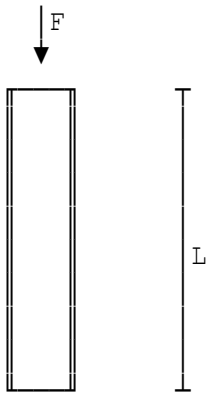

Axially loaded stainless steel column

Calculations are in accordance with BS5950-1:2000 and 'Structural Design of Stainless Steel' published by The Steel Construction Institute.

L = length of member
F = compressive load

Factored axial compressive load	F=19.6 kN
Length between restraints	L=2700 mm
Effective length factor (y axis)	ef=1
100 x 50 x 6 RHS	
Young's Modulus	E=200 kN/mm²
Shear Modulus	G=76.9 kN/mm²
Factor	Lamo=0.4

Steel temperature after 30 minutes fire duration

Initial steel temperature is assumed to be 20 degrees C.

Density at 20 degrees C	rhod=8000 kg/m³
Emissivity	er=0.4
Coefficient of heat transfer	ac=25 W/m² C

The calculation of the temperature rise in the stainless steel is an iterative process, the result of this process is:
temperature at 30 minutes theta=832 degrees C

Reduction of mechanical properties at elevated temperature

The following factors are required for calculation of resistance at elevated temperatures, they have been obtained by linear interpolation from Table 6.2 of the design guide for 832 degrees C.
The value of 2% yield strength at elevated temperature is also required.

Ultimate strength	Us=520 N/mm²
Assumed value of load ratio	R=0.67
Load at fire limit state	Ff=R*F=13.132 kN

Since Ff ≤ Pc0 (13.132 kN ≤ 39.417 kN) applied load within compressive resistance.

SUMMARY

———	**Stainless Steel Section**
RECTANGULAR HOLLOW SECTION	**100 x 50 x 6 RHS Grade 1.4401**
DESIGN	**Compressive load 19.6 kN**
SUMMARY	**Compressive resistance 109.03 kN**
FIRE RESISTANCE	**Heated perimeter 300 mm²**
SUMMARY	**Area of section 15 cm²**
	Ratio (Hp/A) 200
	Assumed Load Ratio 0.67
	Section has an inherent fire resistance of 30 minutes.

Location: RHS section - slender

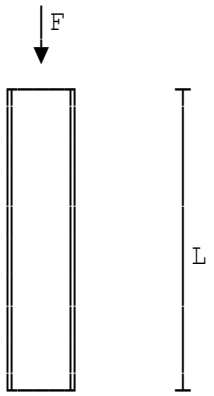

Axially loaded stainless steel column

Calculations are in accordance with BS5950-1:2000 and 'Structural Design of Stainless Steel' published by The Steel Construction Institute.

L = length of member
F = compressive load

Factored axial compressive load	F=400 kN
x-x axis	Lx=6000 mm
y-y axis	Ly=4000 mm
Effective length factor (y axis)	ef=1
Effective length factor (x axis)	Ef=1
200 x 125 x 4 RHS	
Young's Modulus	E=200 kN/mm²
Shear Modulus	G=76.9 kN/mm²
Factor	Lamo=0.4
Factor	Lamo=0.4

SUMMARY

	Stainless Steel Section
RECTANGULAR HOLLOW SECTION	**200 x 125 x 4 RHS Grade 1.4362**
DESIGN	**Compressive load 400 kN**
SUMMARY	**Compressive resistance 440.72 kN**

Location: slender channel

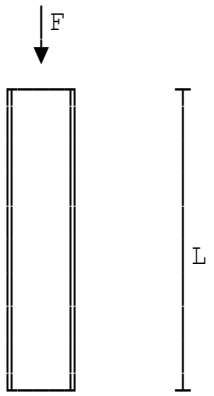

Axially loaded stainless steel column

Calculations are in accordance with BS5950-1:2000 and 'Structural Design of Stainless Steel' published by The Steel Construction Institute.

L = length of member
F = compressive load

Factored axial compressive load	F=350 kN
x-x axis	Lx=4000 mm
y-y axis	Ly=2000 mm
Effective length factor (y axis)	ef=1
Effective length factor (x axis)	Ef=1
350 x 125 x 8 Channel	
Young's Modulus	E=200 kN/mm²
Shear Modulus	G=76.9 kN/mm²
Factor	Lamo=0.4
Factor	Lamo=0.4

SUMMARY

	Stainless Steel Section	
CHANNEL	**350 x 125 x 8 Grade 1.4462**	
DESIGN	**Compressive load**	**350 kN**
SUMMARY	**Compressive resistance**	**646.48 kN**
	Unity relationships	**0.68337 ≤ 1**
	for slender sections	**0.97724 ≤ 1**

Location: slender double channel

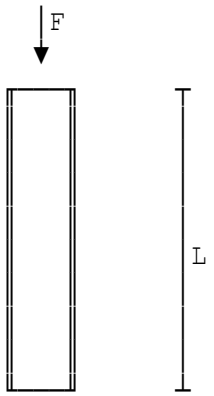

Axially loaded stainless steel column

Calculations are in accordance with BS5950-1:2000 and 'Structural Design of Stainless Steel' published by The Steel Construction Institute.

L = length of member
F = compressive load

Factored axial compressive load	F=800 kN
Length between restraints	L=6000 mm
Effective length factor (y axis)	ef=1
350 x 125 x 10 Channel	
Young's Modulus	E=200 kN/mm²
Shear Modulus	G=76.9 kN/mm²

SUMMARY

	Stainless Steel Section	
DOUBLE CHANNEL	**2/350 x 125 x 10 Grade 1.4462**	
	Back to back	
DESIGN	**Compressive load**	**800 kN**
SUMMARY	**Compressive resistance**	**975.75 kN**

Location: Ex1 - Based on example 4 of stainless steel publication

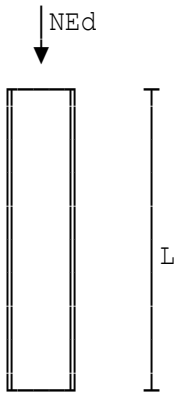

Axially loaded stainless steel column

Calculations are in accordance with the SCI publication entitled 'Design Manual For Structural Stainless steel' (Third Edition) dated 18th April 2006.

NEd = design axial compressive load
L = length of member

Unfactored permanent axial force	Np=6 kN
Unfactored variable axial force	Nv=7 kN
Length of member	L=2700 mm
Length between restraints y-axis	Ly=2700 mm
Length between restraints z-axis	Lz=2700 mm
100 x 50 x 6 RHS	
Young's Modulus	E=200 kN/mm²

	Stainless Steel Section	
RECTANGULAR HOLLOW SECTION	**100 x 50 x 6 RHS Grade 1.4401**	
DESIGN	**Design compr.load**	**18.6 kN**
SUMMARY	**Compr.resistance**	**95.104 kN**

Fire resistance without applied protection

The method for calculating the temperature rise in carbon steel can also be applied to stainless steel (refer to SCI publication P403 and BS EN 1993-1-2 Clauses 4.2.4 & 4.2.5).

Determine critical temperature of steel in fire situation

Buckling length in fire situation	Lfi=1890 mm
Critical temperature θcr	tCR=TABLE 252 for mo=0.039394, lamfi =1.2292 =776.14 °C
Fire resistance period	30 minutes

Reduction of mechanical properties at elevated temperature

The following reduction factors (as per EN 1993-1-2, Table C.1) are required for calculation of resistance at elevated temperatures.

Young's modulus retention factor	kEt=0.64909
0.2% proof strength ret. factor	k02p=0.42625
Ultimate tensile strength factor	kut=0.39011
Yield strength factor	k2t=0.32375

Buckling resistance

Design buckling resistance NbfiRd=Chifi*A*k02p*fy/(gamfi*10)
=60.389 kN
Design axial compressive force NfiEd=13 kN
As NfiEd ≤ NbfiRd (13 kN ≤ 60.389 kN), the buckling resistance of member is OK.

FIRE RESISTANCE SUMMARY

Design axial force 13 kN
Design axial resistance 60.389 kN
Section has an inherent fire resistance of 30 minutes.

Location: Ex2 - RHS section

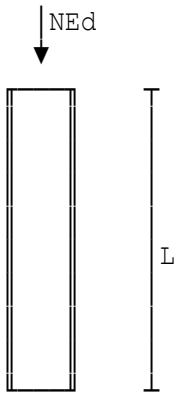

Axially loaded stainless steel column

Calculations are in accordance with the SCI publication entitled 'Design Manual For Structural Stainless steel' (Third Edition) dated 18th April 2006.

NEd = design axial compressive load
L = length of member

Unfactored permanent axial force	Np=133 kN
Unfactored variable axial force	Nv=133 kN
Length of member	L=6000 mm
Length between restraints y-axis	Ly=6000 mm
Length between restraints z-axis	Lz=4000 mm
200 x 125 x 10 RHS	
Young's Modulus	E=200 kN/mm²

	Stainless Steel Section	
RECTANGULAR HOLLOW SECTION	**200 x 125 x 10 RHS**	**Grade 1.4462**
DESIGN	**Design compr.load**	**379.05 kN**
SUMMARY	**Compr.resistance**	**920.15 kN**

Fire resistance without applied protection

The method for calculating the temperature rise in carbon steel can also be applied to stainless steel (refer to SCI publication P403 and BS EN 1993-1-2 Clauses 4.2.4 & 4.2.5).

Determine critical temperature of steel in fire situation

Buckling length in fire situation	Lfi=2800 mm
Critical temperature θcr	tCR=TABLE 256 for mo=0.10199, lamfi =1.0288 =670.67 °C
Fire resistance period	22 minutes

Reduction of mechanical properties at elevated temperature

The following reduction factors (as per EN 1993-1-2, Table C.1) are required for calculation of resistance at elevated temperatures.

Young's modulus retention factor	kEt=0.72467
0.2% proof strength ret. factor	k02p=0.42574
Ultimate tensile strength factor	kut=0.43574
Yield strength factor	k2t=0.37947

Buckling resistance

Design buckling resistance NbfiRd=Chifi*A*k02p*fy/(gamfi*10)
=627.4 kN

Design axial compressive force NfiEd=266 kN

As NfiEd ≤ NbfiRd (266 kN ≤ 627.4 kN), the buckling resistance of member is OK.

FIRE RESISTANCE SUMMARY

Design axial force 266 kN
Design axial resistance 627.4 kN
The section does not have an inherent fire resistance of 30 minutes. Fire protection should be provided.

Location: Ex3 - Channel

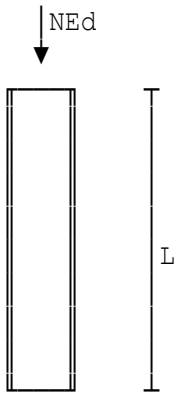

Axially loaded stainless steel column

Calculations are in accordance with the SCI publication entitled 'Design Manual For Structural Stainless steel' (Third Edition) dated 18th April 2006.

NEd = design axial compressive load
L = length of member

Unfactored permanent axial force	Np=117 kN
Unfactored variable axial force	Nv=117 kN
Length of member	L=4000 mm
Length between restraints y-axis	Ly=4000 mm
Length between restraints z-axis	Lz=2000 mm
300 x 100 x 15 Channel	
Young's Modulus	E=200 kN/mm²

	Stainless Steel Section	
CHANNEL	**300 x 100 x 15 Grade 1.4462**	
DESIGN	**Design compr.load**	**333.45 kN**
SUMMARY	**Compr.resistance**	**1107.6 kN**

Fire resistance without applied protection

The method for calculating the temperature rise in carbon steel can also be applied to stainless steel (refer to SCI publication P403 and BS EN 1993-1-2 Clauses 4.2.4 & 4.2.5).

Determine critical temperature of steel in fire situation

Buckling length in fire situation	Lfi=2000 mm
Critical temperature θcr	tCR=TABLE 256 for mo=0.077427, lamfi =1.2516 =670.58 °C
Fire resistance period	22 minutes

Reduction of mechanical properties at elevated temperature

The following reduction factors (as per EN 1993-1-2, Table C.1) are required for calculation of resistance at elevated temperatures.

Young's modulus retention factor	kEt=0.72471
0.2% proof strength ret. factor	k02p=0.42589
Ultimate tensile strength factor	kut=0.43589
Yield strength factor	k2t=0.37941

Buckling resistance

Design buckling resistance NbfiRd=Chifi*A*k02p*fy/(gamfi*10)
=920.16 kN

Design axial compressive force NfiEd=234 kN

As NfiEd ≤ NbfiRd (234 kN ≤ 920.16 kN), the buckling resistance of member is OK.

FIRE RESISTANCE SUMMARY

Design axial force 234 kN
Design axial resistance 920.16 kN
The section does not have an inherent fire resistance of 30 minutes. Fire protection should be provided.

Location: Ex4 - Double channel

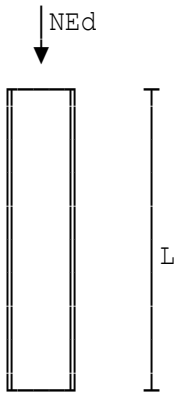

Axially loaded stainless steel column

Calculations are in accordance with the SCI publication entitled 'Design Manual For Structural Stainless steel' (Third Edition) dated 18th April 2006.

NEd = design axial compressive load
L = length of member

Unfactored permanent axial force	Np=250 kN
Unfactored variable axial force	Nv=250 kN
Length of member	L=6000 mm
Length between restraints y-axis	Ly=6000 mm
Length between restraints z-axis	Lz=6000 mm
300 x 100 x 15 Channel	
Young's Modulus	E=200 kN/mm²
Factor	alphay=0.49
Factor	alphaz=0.76
Factor	Lamo=0.2

	Stainless Steel Section	
DOUBLE CHANNEL	**2/300 x 100 x 15 Grade 1.4462**	
	Back to back channels	
DESIGN	**Design compr.load**	**712.5 kN**
SUMMARY	**Compr.resistance**	**764.36 kN**

Fire resistance without applied protection

The method for calculating the temperature rise in carbon steel can also be applied to stainless steel (refer to SCI publication P403 and BS EN 1993-1-2 Clauses 4.2.4 & 4.2.5).

Determine critical temperature of steel in fire situation

Buckling length in fire situation	Lfi=4200 mm
Critical temperature θcr	tCR=TABLE 256 for mo=0.082721, lamfi =1.9011 =571.23 °C
Fire resistance period	17 minutes

Reduction of mechanical properties at elevated temperature

The following reduction factors (as per EN 1993-1-2, Table C.1) are required for calculation of resistance at elevated temperatures.

Young's modulus retention factor	kEt=0.77151
0.2% proof strength ret. factor	k02p=0.58589
Ultimate tensile strength factor	kut=0.61027
Yield strength factor	k2t=0.32137

Buckling resistance

Design buckling resistance NbfiRd=Chifi*A*k02p*fy/(gamfi*10)
=734.27 kN

Design axial compressive force NfiEd=500 kN

As NfiEd ≤ NbfiRd (500 kN ≤ 734.27 kN), the buckling resistance of member is OK.

FIRE RESISTANCE SUMMARY

Design axial force 500 kN
Design axial resistance 734.27 kN
The section does not have an inherent fire resistance of 30 minutes. Fire protection should be provided.

Location: Example based on Ex.1 in P291

Factored axial compressive load	F=230 kN
Factored axial tensile load	Ft=200 kN
100 x 100 x 10 equal angle	
Young's Modulus	E=200 kN/mm²
Shear Modulus	G=76.9 kN/mm²
Length	L=1500 mm
Distance between restraints	Lx=1500 mm
Factor	Lamo=0.4

SUMMARY

	Stainless Steel Section
EQUAL ANGLE	**100 mm x 100 mm x 10 mm Grade 1.4301**
SECTION	**Section is satisfactory for axial**
SUMMARY	**load.**
	Welding equivalent to at least two bolts at each end.
	Compressive load 230 kN
	Compressive resistance 251.3 kN
	Unity relationships 0.71111 ≤ 1
	for slender sections 0.99319 ≤ 1
	Tensile load 200 kN
	Tensile capacity 326.13 kN

Location: Example slender back to back equal angles

Factored axial compressive load	F=690 kN
Factored axial tensile load	Ft=550 kN
400 x 200 x 10 equal angles back to back	
Young's Modulus	E=200 kN/mm²
Shear Modulus	G=76.9 kN/mm²
Length	L=3000 mm
Effective length (x-x axis)	Lx=3000 mm
Effective length (y-y axis)	Ly=3000 mm
Distance between bolts	Lc=1000 mm
Factor	Lamo=0.4

SUMMARY

	Stainless Steel Section	
DOUBLE ANGLE	**400 mm x 200 mm x 10 mm Grade 1.4301**	
	Back to Back	
SECTION	**Section is satisfactory for axial**	
SUMMARY	**load.**	
	Welding equivalent to at least two	
	bolts at each end.	
	Compressive load	**690 kN**
	Compressive resistance	**833.69 kN**
	Unity relationships	**0.63583 ≤ 1**
	for slender sections	**0.96167 ≤ 1**
	Tensile load	**550 kN**
	Tensile capacity	**1480.8 kN**

Copyright 1986-2024 Fitzroy Systems Ltd.

Location: Tension only single angle

Factored axial tensile load	Ft=340 kN
150 x 150 x 12 equal angle	
Young's Modulus	E=200 kN/mm²
Shear Modulus	G=76.9 kN/mm²
Diameter of bolts	db=20 mm

SUMMARY

	Stainless Steel Section	
EQUAL ANGLE	**150 mm x 150 mm x 12 mm**	**Grade 1.4401**
SECTION	**Section is satisfactory for axial**	
SUMMARY	**load.**	
	Tensile load	**340 kN**
	Tensile capacity	**500.81 kN**

Copyright 1986-2024 Fitzroy Systems Ltd.

Location: Tension only double angle

Factored axial tensile load Ft=890 kN
300 x 150 x 15 equal angles back to back
Young's Modulus E=200 kN/mm²
Shear Modulus G=76.9 kN/mm²

Diameter of bolts db=24 mm

SUMMARY

	Stainless Steel Section
DOUBLE ANGLE	**300 mm x 150 mm x 15 mm Grade 1.4301**
	Back to Back
SECTION	**Section is satisfactory for axial**
SUMMARY	**load.**
	Tensile load 890 kN
	Tensile capacity 1312.3 kN

Location: Ex1 - Single angle checked for compression & tension

Design axial compressive load NEd=230 kN
Design axial tensile load NEdT=200 kN

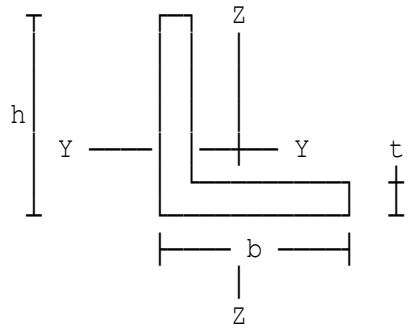

Stainless steel
equal angle

h = b

100 x 100 x 15 equal angle
Young's Modulus E=200 kN/mm²
Length of member L=1500 mm
Distance between restraints Ly=1500 mm

EQUAL ANGLE DESIGN SUMMARY

Stainless Steel Section
100 mm x 100 mm x 15 mm Grade 1.4301
Section is satisfactory for axial load.
Welding equivalent to at least two bolts at each end has been assumed.

Design compressive load	**230 kN**
Compressive resistance	**274.96 kN**
Design tensile load	**200 kN**
Tensile resistance	**424.01 kN**

Location: Ex2 - Back to back equal angles

Design axial compressive load NEd=690 kN
Design axial tensile load NEdT=550 kN

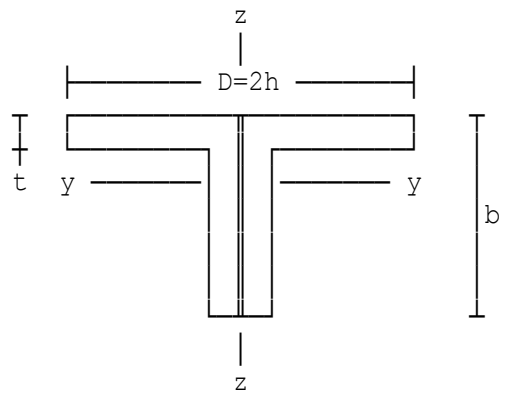

Two stainless steel equal angles back to back

b = h
D = 2h

300 x 150 x 15 Same size angles back to back

Young's Modulus	E=200 kN/mm²
Length of member	L=3000 mm
Effective length (y-y axis)	Ly=3000 mm
Effective length (z-z axis)	Lz=3000 mm
Distance between bolts	Lc=1000 mm

	Stainless Steel Section
DOUBLE ANGLE	**2No. 150 mm x 150 mm x 15 mm Grade 1.4301 Back to Back angles**
DESIGN SUMMARY	**Section is satisfactory for axial load.**
	Welding equivalent to at least two bolts at each end has been assumed.
	Design compressive load 690 kN
	Compressive resistance 1024 kN
	Design tensile load 550 kN
	Tensile resistance 1438.4 kN

Location: Ex3 - Tension only single angle

Design axial tensile load NEdT=340 kN

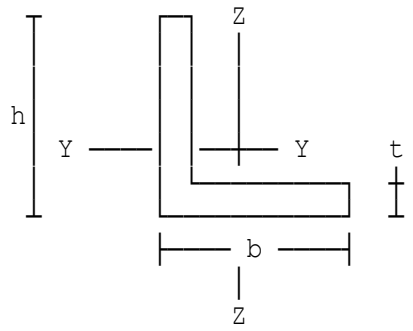

Stainless steel
equal angle

h = b

150 x 150 x 12 equal angle
Young's Modulus E=200 kN/mm²
Diameter of bolts db=20 mm

EQUAL ANGLE DESIGN SUMMARY

Stainless Steel Section
150 mm x 150 mm x 12 mm Grade 1.4401
Section is satisfactory for axial load.
Design tensile load 340 kN
Tensile resistance 455.28 kN

Location: Ex4 - Tension only double angle

Design axial tensile load NEdT=890 kN

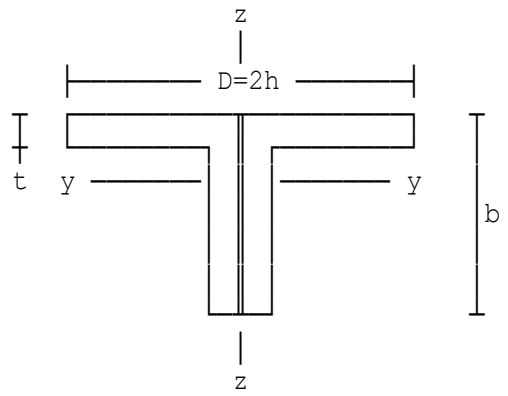

Two stainless steel equal angles back to back

b = h
D = 2h

300 x 150 x 15 Same size angles back to back
Young's Modulus E=200 kN/mm²
Diameter of bolts db=24 mm

DOUBLE ANGLE	**Stainless Steel Section 2No. 150 mm x 150 mm x 15 mm Grade 1.4301 Back to Back angles**
DESIGN SUMMARY	**Section is satisfactory for axial load.**
	Design tensile load 890 kN
	Tensile resistance 1193 kN

Location: Ex1 - SHS column under axial load

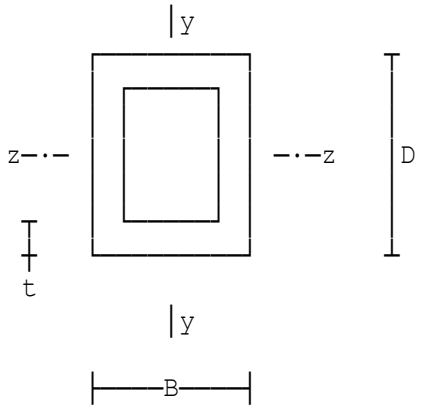

Concrete filled SHS column

Calculations in accordance with British Steel (Corus) publication TD 296 entitled 'SHS Design Manual for Concrete Filled Columns Part 1 Structural Design'.

Loads and moments are factored.

Factored BM about z-z axis	Mdz=0 kNm
Factored SF in y direction	Nv=0 kN
Axial compressive load	Nd=1800 kN
Length of member	L=4 m
Maximum BM about y-y axis	Mdy=0 kNm

200 x 200 x 10 SHS - Hot finished.
Properties (cm): A=74.9 rx=7.72 Zx=447 Sx=531 Ix=4470 J=7030 C=655
(where rz=rx, Zz=Zx, Sz=Sx & Iz=Ix)
Young's Modulus Es=210 kN/mm²

Characteristic concrete strength	fcu=25 N/mm²
Length btwn restraints z-z axis	Lz=4 m
Length btwn restraints y-y axis	Ly=0 m
Effective length factor (z-axis)	efz=1

DESIGN SUMMARY	**Section is satisfactory**
HOT FINISHED	**In accordance with EN 10210**
SQUARE HOLLOW SECTION	**200 x 200 x 10 SHS Grade S 275**
WITH CONCRETE INFILL	**Cube strength 25 N/mm²**
	Contribution factor 0.16244
	Applied axial load 1800 kN
	Squash resistance 2237.9 kN
	Axial resistance 1999.2 kN

Location: Ex2 - Bending about major axis, other axis restrained

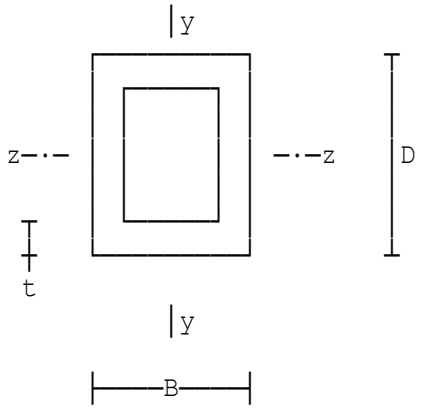

Concrete filled SHS column

Calculations in accordance with British Steel (Corus) publication TD 296 entitled 'SHS Design Manual for Concrete Filled Columns Part 1 Structural Design'.

Loads and moments are factored.

Factored BM about z-z axis	Mdz=150 kNm
Factored SF in y direction	Nv=0 kN
Axial compressive load	Nd=1500 kN
Length of member	L=7.7143 m
Maximum BM about y-y axis	Mdy=0 kNm

250 x 150 x 16 RHS - Hot finished.
Properties (cm): A=115 rx=8.79 Zx=710 Sx=906 Ix=8880
J=8870 C=849 Zy=516 Sy=625 Iy=3870 ry=5.8
(where rz=rx, Zz=Zx, Sz=Sx & Iz=Ix)

Far end BM	Mdz1=150 kNm
Young's Modulus	Es=210 kN/mm²

Characteristic concrete strength	fcu=40 N/mm²
Length btwn restraints z-z axis	Lz=7.7143 m
Length btwn restraints y-y axis	Ly=0 m
Effective length factor (z-axis)	efz=0.7

DESIGN SUMMARY
HOT FINISHED
RECTANGULAR HOLLOW SECTION
WITH CONCRETE INFILL

Section is satisfactory
In accordance with EN 10210
250 x 150 x 16 RHS Grade S 355

Cube strength	**40 N/mm²**
Contribution factor	**0.10998**
Applied axial load	**1500 kN**
Squash resistance	**4174.2 kN**
Applied moment (z-z)	**150 kNm**
Far-end BM	**150 kNm**
Moment capacity (z-z)	**313.53 kNm**

Location: Ex3 - Biaxial bending

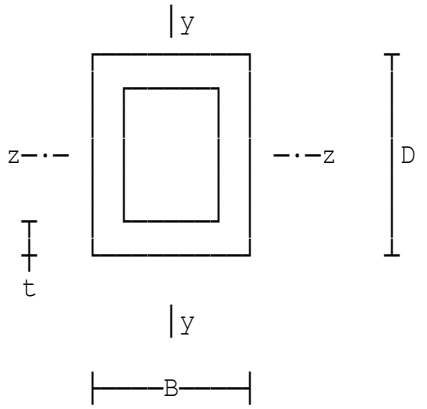

Concrete filled SHS column

Calculations in accordance with British Steel (Corus) publication TD 296 entitled 'SHS Design Manual for Concrete Filled Columns Part 1 Structural Design'.

Loads and moments are factored.

Factored BM about z-z axis	Mdz=150 kNm
Factored SF in y direction	Nv=0 kN
Axial compressive load	Nd=1200 kN
Length of member	L=8.5714 m
Maximum BM about y-y axis	Mdy=100 kNm

300 x 200 x 10 RHS - Hot finished.
Properties (cm): A=94.9 rx=11.2 Zx=788 Sx=956 Ix=11800
J=12900 C=1020 Zy=628 Sy=721 Iy=6280 ry=8.13
(where rz=rx, Zz=Zx, Sz=Sx & Iz=Ix)

Far end BM	Mdz1=150 kNm
Far end BM	Mdy1=100 kNm
Young's Modulus	Es=210 kN/mm²

Characteristic concrete strength	fcu=40 N/mm²
Length btwn restraints z-z axis	Lz=8.5714 m
Length btwn restraints y-y axis	Ly=6 m
Effective length factor (z-axis)	efz=0.7
Effective length factor (y axis)	efy=0.7

DESIGN SUMMARY	**Section is satisfactory**	
HOT FINISHED	**In accordance with EN 10210**	
RECTANGULAR HOLLOW SECTION	**300 x 200 x 10 RHS Grade S 355**	
WITH CONCRETE INFILL	**Cube strength**	**40 N/mm²**
	Contribution factor	**0.22804**
	Applied axial load	**1200 kN**
	Squash resistance	**3971.4 kN**
	Axial resistance	**1377 kN**
	Buckling resistance	**1880.6 kN**
	Applied moment (z-z)	**150 kNm**
	Far-end BM	**150 kNm**
	Moment capacity (z-z)	**336.14 kNm**
	Buckling resistance	**2045.2 kN**
	Applied moment (y-y)	**100 kNm**
	Far-end BM	**100 kNm**
	Moment capacity (y-y)	**249.09 kNm**

Location: Ex4 - Bending about z-z axiz, y-y unrestrained

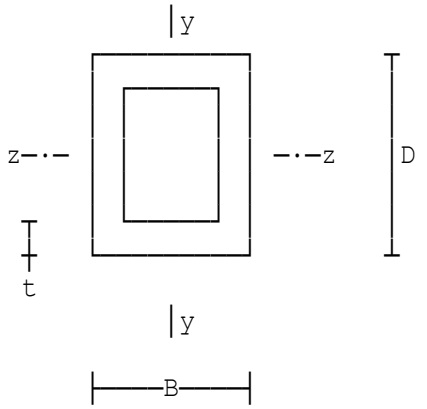

Concrete filled SHS column

Calculations in accordance with British Steel (Corus) publication TD 296 entitled 'SHS Design Manual for Concrete Filled Columns Part 1 Structural Design'.

Loads and moments are factored.

Factored BM about z-z axis	Mdz=75 kNm
Factored SF in y direction	Nv=0 kN
Axial compressive load	Nd=900 kN
Length of member	L=6 m
Maximum BM about y-y axis	Mdy=0 kNm

250 x 150 x 10 RHS - Hot finished.
Properties (cm): A=74.9 rx=9.08 Zx=494 Sx=611 Ix=6170
J=6090 C=605 Zy=367 Sy=426 Iy=2760 ry=6.06
(where rz=rx, Zz=Zx, Sz=Sx & Iz=Ix)

Far end BM	Mdz1=0 kNm
Young's Modulus	Es=210 kN/mm²

Characteristic concrete strength	fcu=60 N/mm²
Length btwn restraints z-z axis	Lz=6 m
Length btwn restraints y-y axis	Ly=6 m
Effective length factor (z-axis)	efz=0.85
Effective length factor (y axis)	efy=1

DESIGN SUMMARY	**Section is satisfactory**
HOT FINISHED	**In accordance with EN 10210**
RECTANGULAR HOLLOW SECTION	**250 x 150 x 10 RHS Grade S 275**
WITH CONCRETE INFILL	**Cube strength 60 N/mm²**
	Contribution factor 0.30044
	Applied axial load 900 kN
	Squash resistance 2679.4 kN
	Buckling resistance 1581.5 kN
	Applied moment (z-z) 75 kNm
	Far-end BM 0 kNm
	Moment capacity (z-z) 171.23 kNm

Location: Ex5 - Varying bending moment 1

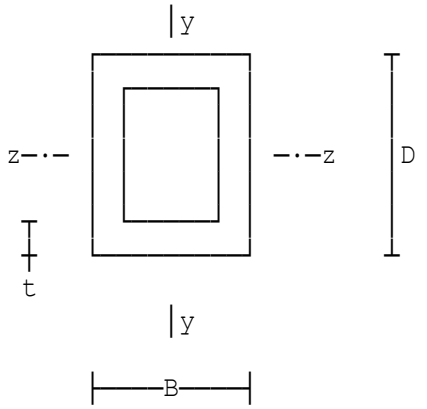

Concrete filled SHS column

Calculations in accordance with British Steel (Corus) publication TD 296 entitled 'SHS Design Manual for Concrete Filled Columns Part 1 Structural Design'.

Loads and moments are factored.

Factored BM about z-z axis	Mdz=56 kNm
Factored SF in y direction	Nv=0 kN
Axial compressive load	Nd=400 kN
Length of member	L=8 m
Maximum BM about y-y axis	Mdy=8 kNm

150 x 150 x 8 SHS - Hot finished.
Properties (cm): A=44.8 rx=5.77 Zx=199 Sx=237 Ix=1490 J=2350 C=291
(where rz=rx, Zz=Zx, Sz=Sx & Iz=Ix)

Far end BM	Mdz1=-28 kNm
Far end BM	Mdy1=6 kNm
Young's Modulus	Es=210 kN/mm²

Characteristic concrete strength	fcu=40 N/mm²
Length btwn restraints z-z axis	Lz=8 m
Length btwn restraints y-y axis	Ly=4 m
Effective length factor (z-axis)	efz=0.7
Effective length factor (y axis)	efy=0.7

DESIGN SUMMARY **Section is satisfactory**
HOT FINISHED **In accordance with EN 10210**
SQUARE HOLLOW SECTION **150 x 150 x 8 SHS Grade S 355**
WITH CONCRETE INFILL

Cube strength	**40 N/mm²**
Contribution factor	**0.1821**
Applied axial load	**400 kN**
Squash resistance	**1769.5 kN**
Axial resistance	**493.98 kN**
Buckling resistance	**410.85 kN**
Applied moment (z-z)	**56 kNm**
Far-end BM	**-28 kNm**
Moment capacity (z-z)	**81.981 kNm**
Buckling resistance	**1414.8 kN**
Applied moment (y-y)	**8 kNm**
Far-end BM	**6 kNm**
Moment capacity (y-y)	**81.981 kNm**

Location: Ex6 - Varying bending moment 2

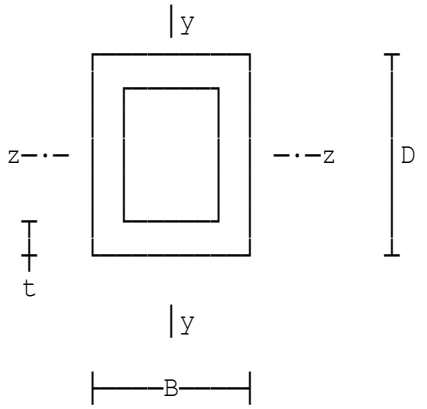

Concrete filled SHS column

Calculations in accordance with British Steel (Corus) publication TD 296 entitled 'SHS Design Manual for Concrete Filled Columns Part 1 Structural Design'.

Loads and moments are factored.

Factored BM about z-z axis	Mdz=470 kNm
Factored SF in y direction	Nv=0 kN
Axial compressive load	Nd=300 kN
Length of member	L=9 m
Maximum BM about y-y axis	Mdy=0 kNm

400 x 200 x 12.5 RHS - Hot finished.
Properties (cm): A=142 rx=14.3 Zx=1450 Sx=1810 Ix=29100
J=23400 C=1660 Zy=974 Sy=1110 Iy=9740 ry=8.28
(where rz=rx, Zz=Zx, Sz=Sx & Iz=Ix)

Far end BM	Mdz1=47 kNm
Young's Modulus	Es=210 kN/mm²

Characteristic concrete strength	fcu=20 N/mm²
Length btwn restraints z-z axis	Lz=9 m
Length btwn restraints y-y axis	Ly=9 m
Effective length factor (z-axis)	efz=0.85
Effective length factor (y axis)	efy=1

DESIGN SUMMARY	**Section is satisfactory**	
HOT FINISHED	**In accordance with EN 10210**	
RECTANGULAR HOLLOW SECTION	**400 x 200 x 12.5 RHS**	**Grade S 275**
WITH CONCRETE INFILL	**Cube strength**	**20 N/mm²**
	Contribution factor	**0.14227**
	Applied axial load	**300 kN**
	Squash resistance	**4143 kN**
	Buckling resistance	**868.32 kN**
	Applied moment (z-z)	**470 kNm**
	Far-end BM	**47 kNm**
	Moment capacity (z-z)	**483.61 kNm**

Location: Ex1 - SHS column under axial load

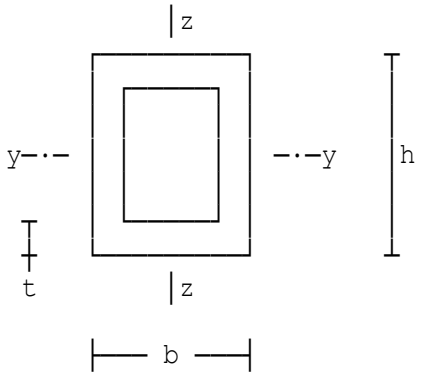

Concrete filled SHS column

Calculations are in accordance with with 'The Design Guide for Concrete Filled SHS Columns' by Y.C. Wang published in 2009, EC3 Part 1-1 and EC4 Part 1-1.

All loads and moments are factored.

Design moment about major axis	MyEd=0 kNm
Design SF in z direction	VzEd=0 kN
Design axial compressive load	NEd=1800 kN
Length of member	L=4 m
Design moment about minor axis	MzEd=0 kNm

200 x 200 x 10 SHS - Hot finished.
Properties (cm): A=74.9 iy=7.72 Wely=447 Wply=531 Iy=4470 It=7030
Wt=655

Permanent design load	NgEd=1500
Steel γa	gama=1
Concrete γc	gamc=1.5

Length btwn restraints y-y axis	Ly=4 m
Length btwn restraints z-z axis	Lz=0 m
Effective length factor y-y axis	Ky=1
Effective length factor z-z axis	Kz=1

DESIGN SUMMARY	**Section is satisfactory**
HOT FINISHED	**In accordance with EN 10210**
SQUARE HOLLOW SECTION	**200 x 200 x 10 SHS Grade S 275**
WITH CONCRETE INFILL (NWC)	**Cylinder strength 25 N/mm²**
	Design axial load 1800 kN
	Column axial resistance 2220.2 kN

Location: Ex2 - Bending about major axis, other axis restrained

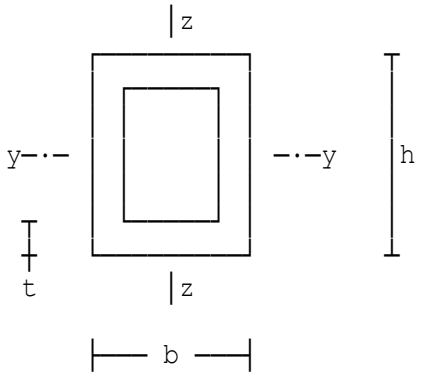

Concrete filled SHS column

Calculations are in accordance with with 'The Design Guide for Concrete Filled SHS Columns' by Y.C. Wang published in 2009, EC3 Part 1-1 and EC4 Part 1-1.

All loads and moments are factored.

Design moment about major axis	MyEd=140 kNm
Design SF in z direction	VzEd=20 kN
Design axial compressive load	NEd=1500 kN
Length of member	L=7 m
Design moment about minor axis	MzEd=0 kNm

250 x 150 x 16 RHS - Hot finished.
Properties (cm): A=115 iz=5.8 Wely=710 Wply=906 Iy=8880
It=8870 Wt=849 Welz=516 Wplz=625 Iz=3870 iy=8.79

Permanent design load	NgEd=1200
Steel γa	gama=1
Concrete γc	gamc=1.5
Length btwn restraints y-y axis	Ly=7 m
Length btwn restraints z-z axis	Lz=0 m
Effective length factor y-y axis	Ky=1
Effective length factor z-z axis	Kz=1
Far end BM	MyEd1=0 kNm
Shear plastic resistance	VplRd=Av*fy/SQR(3)/(gamM0*1000) =1473.1 kN
Design shear force	VzEd=20 kN

Since VzEd ≤ 0.5VplRd (20 kN ≤ 736.57 kN) design shear force is within the shear plastic resistance.

DESIGN SUMMARY	**Section is satisfactory**
HOT FINISHED	**In accordance with EN 10210**
RECTANGULAR HOLLOW SECTION	**250 x 150 x 16 RHS Grade S 355**
WITH CONCRETE INFILL (NWC)	**Cylinder strength 32 N/mm²**
	Design axial load 1500 kN
	Design moment y-y axis 224.02 kNm
	Moment capacity y-y axis 256.46 kNm

Location: Ex3 - Biaxial bending

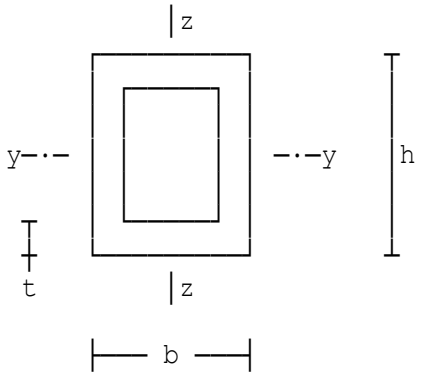

Concrete filled SHS column

Calculations are in accordance with with 'The Design Guide for Concrete Filled SHS Columns' by Y.C. Wang published in 2009, EC3 Part 1-1 and EC4 Part 1-1.

All loads and moments are factored.

Design moment about major axis	MyEd=135 kNm
Design SF in z direction	VzEd=16 kN
Design axial compressive load	NEd=1200 kN
Length of member	L=8.5714 m
Design moment about minor axis	MzEd=100 kNm

300 x 200 x 10 RHS - Hot finished.
Properties (cm): A=94.9 iz=8.13 Wely=788 Wply=956 Iy=11800
It=12900 Wt=1020 Welz=628 Wplz=721 Iz=6280 iy=11.2

Permanent design load	NgEd=900
Steel γa	gama=1
Concrete γc	gamc=1.5
Length btwn restraints y-y axis	Ly=8.5714 m
Length btwn restraints z-z axis	Lz=6 m
Effective length factor y-y axis	Ky=1
Effective length factor z-z axis	Kz=1
Far end BM	MyEd1=-135 kNm
Far end BM	MzEd1=-100 kNm
Shear plastic resistance	VplRd=Av*fy/SQR(3)/(gamM0*1000) =1167 kN
Design shear force	VzEd=16 kN

Since VzEd ≤ 0.5VplRd (16 kN ≤ 583.52 kN) design shear force is within the shear plastic resistance.

DESIGN SUMMARY	**Section is satisfactory**
HOT FINISHED	**In accordance with EN 10210**
RECTANGULAR HOLLOW SECTION	**300 x 200 x 10 RHS Grade S 355**
WITH CONCRETE INFILL (NWC)	**Cylinder strength 32 N/mm²**
	Design axial load 1200 kN
	Design moment y-y axis 135 kNm
	Moment capacity y-y axis 355.04 kNm
	Design moment z-z axis 100 kNm
	Moment capacity z-z axis 262.67 kNm
	Interaction factors 0.80169 ≤ 1
	0.83801 ≤ 1

Location: Ex4 - Bending about z-z axis, y-y unrestrained

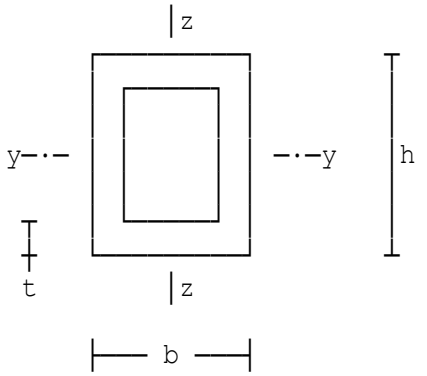

Concrete filled SHS column

Calculations are in accordance with with 'The Design Guide for Concrete Filled SHS Columns' by Y.C. Wang published in 2009, EC3 Part 1-1 and EC4 Part 1-1.

All loads and moments are factored.

Design moment about major axis	MyEd=75 kNm
Design SF in z direction	VzEd=12.5 kN
Design axial compressive load	NEd=900 kN
Length of member	L=6 m
Design moment about minor axis	MzEd=0 kNm

250 x 150 x 10 RHS - Hot finished.
Properties (cm): A=74.9 iz=6.06 Wely=494 Wply=611 Iy=6170
It=6090 Wt=605 Welz=367 Wplz=426 Iz=2760 iy=9.08

Permanent design load	NgEd=600
Steel γa	gama=1
Concrete γc	gamc=1.5
Length btwn restraints y-y axis	Ly=6 m
Length btwn restraints z-z axis	Lz=6 m
Effective length factor y-y axis	Ky=1
Effective length factor z-z axis	Kz=1
Far end BM	MyEd1=0 kNm
Shear plastic resistance	VplRd=Av*fy/SQR(3)/(gamM0*1000) =743.25 kN
Design shear force	VzEd=12.5 kN

Since VzEd ≤ 0.5VplRd (12.5 kN ≤ 371.62 kN) design shear force is within the shear plastic resistance.

DESIGN SUMMARY	**Section is satisfactory**
HOT FINISHED	**In accordance with EN 10210**
RECTANGULAR HOLLOW SECTION	**250 x 150 x 10 RHS Grade S 275**
WITH CONCRETE INFILL (NWC)	**Cylinder strength 50 N/mm²**
	Design axial load 900 kN
	Design moment y-y axis 91.669 kNm
	Moment capacity y-y axis 189.99 kNm

Location: Ex5 - Varying bending moment 1

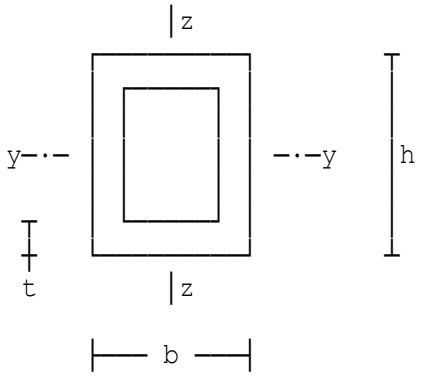

Concrete filled SHS column

Calculations are in accordance with with 'The Design Guide for Concrete Filled SHS Columns' by Y.C. Wang published in 2009, EC3 Part 1-1 and EC4 Part 1-1.

All loads and moments are factored.

Design moment about major axis	MyEd=56 kNm
Design SF in z direction	VzEd=8.6 kN
Design axial compressive load	NEd=400 kN
Length of member	L=6.5 m
Design moment about minor axis	MzEd=8 kNm

150 x 150 x 12.5 SHS - Hot finished.
Properties (cm): A=67.1 iy=5.57 Wely=277 Wply=342 Iy=2080 It=3370
Wt=402

Permanent design load	NgEd=300
Steel γa	gama=1
Concrete γc	gamc=1.5
Length btwn restraints y-y axis	Ly=6.5 m
Length btwn restraints z-z axis	Lz=4 m
Effective length factor y-y axis	Ky=1
Effective length factor z-z axis	Kz=1
Far end BM	MyEd1=-28 kNm
Far end BM	MzEd1=6 kNm
Shear plastic resistance	VplRd=Av*fy/SQR(3)/(gamM0*1000) =687.64 kN
Design shear force	VzEd=8.6 kN

Since VzEd ≤ 0.5VplRd (8.6 kN ≤ 343.82 kN) design shear force is within the shear plastic resistance.

DESIGN SUMMARY	**Section is satisfactory**
HOT FINISHED	**In accordance with EN 10210**
SQUARE HOLLOW SECTION	**150 x 150 x 12.5 SHS Grade S 355**
WITH CONCRETE INFILL (NWC)	**Cylinder strength 32 N/mm²**
	Design axial load 400 kN
	Design moment y-y axis 56 kNm
	Moment capacity y-y axis 122.19 kNm
	Design moment z-z axis 8 kNm
	Moment capacity z-z axis 122.19 kNm
	Interaction factors 0.55102 ≤ 1
	0.62006 ≤ 1

Location: Ex6 - Varying bending moment 2

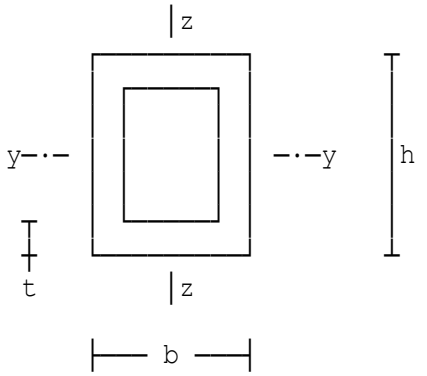

Concrete filled SHS column

Calculations are in accordance with with 'The Design Guide for Concrete Filled SHS Columns' by Y.C. Wang published in 2009, EC3 Part 1-1 and EC4 Part 1-1.

All loads and moments are factored.

Design moment about major axis	MyEd=470 kNm
Design SF in z direction	VzEd=52.2 kN
Design axial compressive load	NEd=300 kN
Length of member	L=9 m
Design moment about minor axis	MzEd=0 kNm

400 x 200 x 12.5 RHS - Hot finished.
Properties (cm): A=142 iz=8.28 Wely=1450 Wply=1810 Iy=29100
It=23400 Wt=1660 Welz=974 Wplz=1110 Iz=9740 iy=14.3

Permanent design load	NgEd=200
Steel γa	gama=1
Concrete γc	gamc=1.5
Length btwn restraints y-y axis	Ly=9 m
Length btwn restraints z-z axis	Lz=9 m
Effective length factor y-y axis	Ky=1
Effective length factor z-z axis	Kz=1
Shear plastic resistance	VplRd=Av*fy/SQR(3)/(gamM0*1000) =1503 kN
Design shear force	VzEd=52.2 kN

Since VzEd ≤ 0.5VplRd (52.2 kN ≤ 751.52 kN) design shear force is within the shear plastic resistance.

DESIGN SUMMARY	**Section is satisfactory**
HOT FINISHED	**In accordance with EN 10210**
RECTANGULAR HOLLOW SECTION	**400 x 200 x 12.5 RHS Grade S 275**
WITH CONCRETE INFILL (NWC)	**Cylinder strength 25 N/mm²**
	Design axial load 300 kN
	Design moment y-y axis 470 kNm
	Moment capacity y-y axis 541.11 kNm

Location: Ex7 - Ex10.4 in Lawrence Martin & John Purkiss book

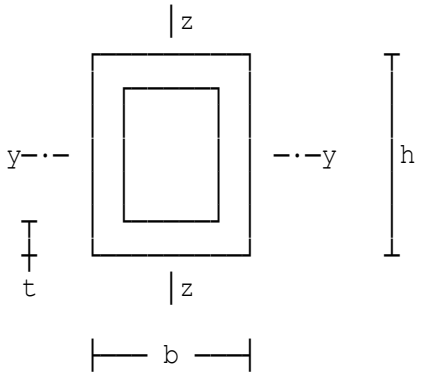

Concrete filled SHS column

Calculations are in accordance with with 'The Design Guide for Concrete Filled SHS Columns' by Y.C. Wang published in 2009, EC3 Part 1-1 and EC4 Part 1-1.

All loads and moments are factored.

Design moment about major axis	MyEd=0 kNm
Design SF in z direction	VzEd=0 kN
Design axial compressive load	NEd=1200 kN
Length of member	L=4 m
Design moment about minor axis	MzEd=0 kNm

150 x 150 x 8 SHS - Hot finished.
Properties (cm): A=44.8 iy=5.77 Wely=199 Wply=237 Iy=1490 It=2350
Wt=291

Steel γa	gama=1.05
Concrete γc	gamc=1.5

Length btwn restraints y-y axis	Ly=4 m
Length btwn restraints z-z axis	Lz=4 m
Effective length factor y-y axis	Ky=1
Effective length factor z-z axis	Kz=1

DESIGN SUMMARY	**Section is satisfactory**
HOT FINISHED	**In accordance with EN 10210**
SQUARE HOLLOW SECTION	**150 x 150 x 8 SHS Grade S 355**
WITH CONCRETE INFILL (NWC)	**Cylinder strength 25 N/mm²**
	Design axial load 1200 kN
	Column axial resistance 1265.7 kN

Location: Ex8 - Ex10.5 in Lawrence Martin & John Purkiss book

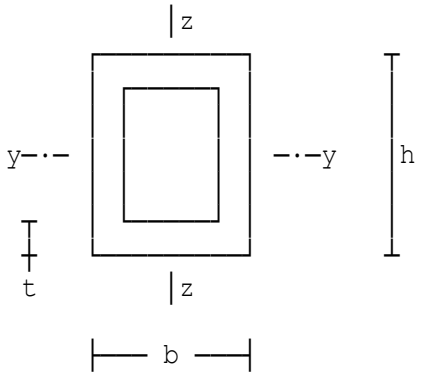

Concrete filled SHS column

Calculations are in accordance with with 'The Design Guide for Concrete Filled SHS Columns' by Y.C. Wang published in 2009, EC3 Part 1-1 and EC4 Part 1-1.

All loads and moments are factored.

Design moment about major axis	MyEd=18 kNm
Design SF in z direction	VzEd=4.5 kN
Design axial compressive load	NEd=400 kN
Length of member	L=4 m
Design moment about minor axis	MzEd=0 kNm

150 x 100 x 8 RHS - Hot finished.
Properties (cm): A=36.8 iz=3.94 Wely=145 Wply=180 Iy=1090
It=1200 Wt=183 Welz=114 Wplz=135 Iz=569 iy=5.44

Permanent design load	NgEd=300
Steel γa	gama=1
Concrete γc	gamc=1.5
Length btwn restraints y-y axis	Ly=4 m
Length btwn restraints z-z axis	Lz=4 m
Effective length factor y-y axis	Ky=1
Effective length factor z-z axis	Kz=1
Far end BM	MyEd1=13.86 kNm
Far end BM	MzEd1=0 kNm
Shear plastic resistance	VplRd=Av*fy/SQR(3)/(gamM0*1000) =452.55 kN
Design shear force	VzEd=4.5 kN

Since VzEd ≤ 0.5VplRd (4.5 kN ≤ 226.28 kN) design shear force is within the shear plastic resistance.

DESIGN SUMMARY	**Section is satisfactory**
HOT FINISHED	**In accordance with EN 10210**
RECTANGULAR HOLLOW SECTION	**150 x 100 x 8 RHS Grade S 355**
WITH CONCRETE INFILL (NWC)	**Cylinder strength 25 N/mm²**
	Design axial load 400 kN
	Design moment y-y axis 18 kNm
	Moment capacity y-y axis 55.785 kNm
	Design moment z-z axis 0 kNm
	Moment capacity z-z axis 41.464 kNm
	Interaction factors 0.60353 ≤ 1
	0.7771 ≤ 1

Location: Ex9 - Ex10.6 in Lawrence Martin & John Purkiss book

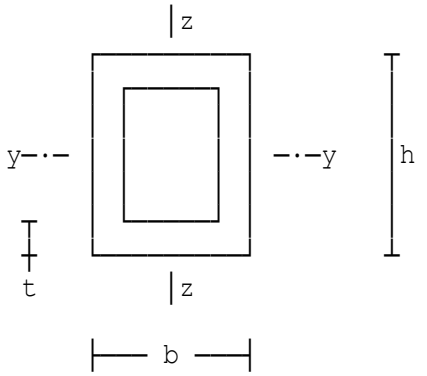

Concrete filled SHS column

Calculations are in accordance with with 'The Design Guide for Concrete Filled SHS Columns' by Y.C. Wang published in 2009, EC3 Part 1-1 and EC4 Part 1-1.

All loads and moments are factored.

Design moment about major axis	MyEd=15 kNm
Design SF in z direction	VzEd=3.75 kN
Design axial compressive load	NEd=350 kN
Length of member	L=4 m
Design moment about minor axis	MzEd=8 kNm

150 x 100 x 8 RHS - Hot finished.
Properties (cm): A=36.8 iz=3.94 Wely=145 Wply=180 Iy=1090
It=1200 Wt=183 Welz=114 Wplz=135 Iz=569 iy=5.44

Permanent design load	NgEd=250
Steel γa	gama=1
Concrete γc	gamc=1.5
Length btwn restraints y-y axis	Ly=4 m
Length btwn restraints z-z axis	Lz=4 m
Effective length factor y-y axis	Ky=1
Effective length factor z-z axis	Kz=1
Far end BM	MyEd1=11.55 kNm
Far end BM	MzEd1=6.16 kNm
Shear plastic resistance	VplRd=Av*fy/SQR(3)/(gamM0*1000) =452.55 kN
Design shear force	VzEd=3.75 kN

Since VzEd ≤ 0.5VplRd (3.75 kN ≤ 226.28 kN) design shear force is within the shear plastic resistance.

DESIGN SUMMARY	**Section is satisfactory**
HOT FINISHED	**In accordance with EN 10210**
RECTANGULAR HOLLOW SECTION	**150 x 100 x 8 RHS Grade S 355**
WITH CONCRETE INFILL (NWC)	**Cylinder strength 25 N/mm²**
	Design axial load 350 kN
	Design moment y-y axis 15 kNm
	Moment capacity y-y axis 58.336 kNm
	Design moment z-z axis 8 kNm
	Moment capacity z-z axis 43.361 kNm
	Interaction factors 0.83612 ≤ 1
	0.94799 ≤ 1

Location: Axial load

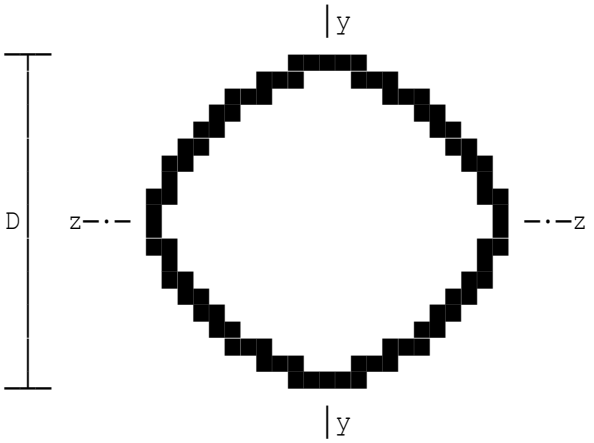

Concrete filled CHS column

Calculations in accordance British Steel (Corus) publication TD 296 SHS Design Manual for Concrete Filled Columns Part 1: Structural Design

All loads and moments are factored

Factored BM about axis zz	Mdz=0 kNm
Factored SF in y direction	Nv=0 kN
Axial compressive load	Nd=5500 kN
Length of member	L=3.5 m
Maximum BM about y-y axis	Mdy=0 kNm
Modulus of elasticity	Es=210 kN/mm²
Characteristic strength	fcu=40 N/mm²
Length btwn restraints z-z axis	Lz=3.5 m
Length btwn restraints y-y axis	Ly=3.5 m
Effective length factor (z-axis)	efz=1
Effective length factor (y-axis)	efy=1

DESIGN SUMMARY	**Section is satisfactory**	
HOT FINISHED	**In accordance with EN 10210**	
CIRCULAR HOLLOW	**406.4 O.D x 12.5 CHS**	
SECTION WITH	**Cube strength**	**40 N/mm²**
CONCRETE INFILL	**Contribution factor**	**0.29155**
	Applied axial load	**5500 kN**
	Squash resistance	**7053.5 kN**
	Axial resistance	**6841.9 kN**

Location: Bending about one axis, other axis restrained

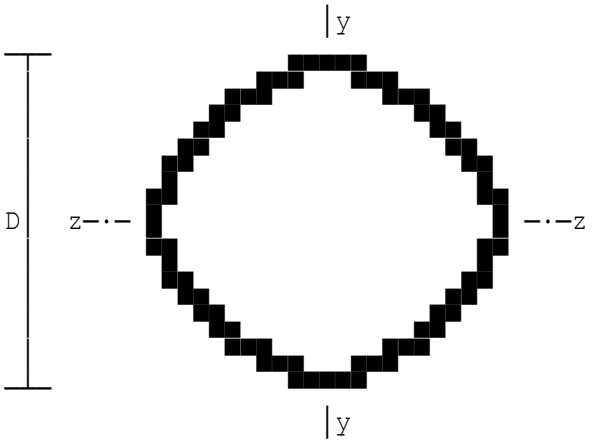

Concrete filled CHS column

Calculations in accordance British Steel (Corus) publication TD 296 SHS Design Manual for Concrete Filled Columns Part 1: Structural Design

All loads and moments are factored

Factored BM about axis zz	Mdz=50 kNm
Factored SF in y direction	Nv=0 kN
Axial compressive load	Nd=3000 kN
Length of member	L=5 m
Maximum BM about y-y axis	Mdy=0 kNm
Modulus of elasticity	Es=210 kN/mm²
Characteristic strength	fcu=40 N/mm²
Length btwn restraints z-z axis	Lz=5 m
Length btwn restraints y-y axis	Ly=0 m
Effective length factor (z-axis)	efz=1
Far end BM	Mdz1=50 kNm

DESIGN SUMMARY	**Section is satisfactory**	
HOT FINISHED	**In accordance with EN 10210**	
CIRCULAR HOLLOW	**244.5 O.D x 20 CHS**	
SECTION WITH	**Cube strength**	**40 N/mm²**
CONCRETE INFILL	**Contribution factor**	**0.11778**
	Applied axial load	**3000 kN**
	Squash resistance	**5019.7 kN**
	Axial resistance	**3096 kN**
	Applied moment (z-z)	**50 kNm**
	Moment capacity	**327.48 kNm**

Location: Bending about both axes

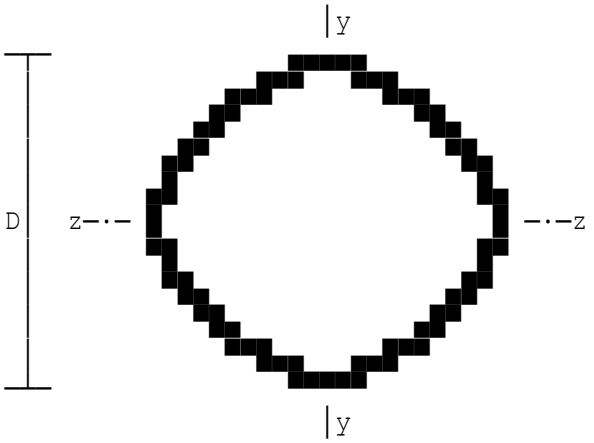

Concrete filled CHS column

Calculations in accordance British Steel (Corus) publication TD 296 SHS Design Manual for Concrete Filled Columns Part 1: Structural Design

All loads and moments are factored

Factored BM about axis zz	Mdz=100 kNm
Factored SF in y direction	Nv=0 kN
Axial compressive load	Nd=4000 kN
Length of member	L=6 m
Maximum BM about y-y axis	Mdy=50 kNm
Modulus of elasticity	Es=210 kN/mm²
Characteristic strength	fcu=40 N/mm²
Length btwn restraints z-z axis	Lz=6 m
Length btwn restraints y-y axis	Ly=6 m
Effective length factor (z-axis)	efz=0.7
Effective length factor (y-axis)	efy=1
Far end BM	Mdz1=100 kNm
Far end BM	Mdy1=0 kNm

DESIGN SUMMARY	**Section is satisfactory**	
HOT FINISHED	**In accordance with EN 10210**	
CIRCULAR HOLLOW	**355.6 O.D x 20 CHS**	
SECTION WITH	**Cube strength**	**40 N/mm²**
CONCRETE INFILL	**Contribution factor**	**0.1754**
	Applied axial load	**4000 kN**
	Squash resistance	**8028.2 kN**
	Axial resistance	**5688.3 kN**
	Applied moment (z-z)	**100 kNm**
	Applied moment (y-y)	**50 kNm**
	Moment capacity	**743.43 kNm**

Location: Bending about one axis, other axis unrestrained

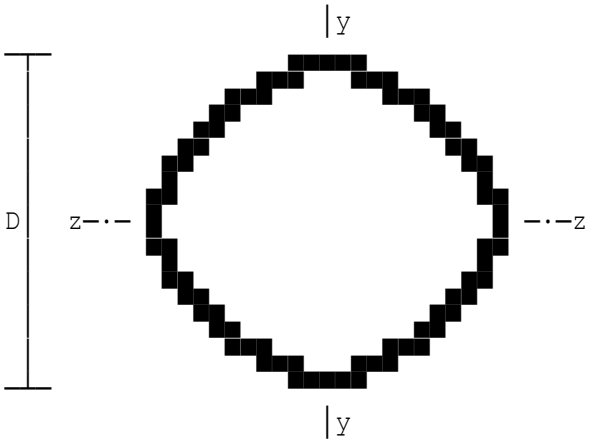

Concrete filled CHS column

Calculations in accordance British Steel (Corus) publication TD 296 SHS Design Manual for Concrete Filled Columns Part 1: Structural Design

All loads and moments are factored

Factored BM about axis zz	Mdz=15 kNm
Factored SF in y direction	Nv=0 kN
Axial compressive load	Nd=890 kN
Length of member	L=3 m
Maximum BM about y-y axis	Mdy=0 kNm
Modulus of elasticity	Es=210 kN/mm²
Characteristic strength	fcu=40 N/mm²
Length btwn restraints z-z axis	Lz=3 m
Length btwn restraints y-y axis	Ly=3 m
Effective length factor (z-axis)	efz=0.85
Effective length factor (y-axis)	efy=1
Far end BM	Mdz1=-15 kNm

DESIGN SUMMARY	**Section is satisfactory**	
HOT FINISHED	**In accordance with EN 10210**	
CIRCULAR HOLLOW	**168.3 O.D x 5 CHS**	
SECTION WITH	**Cube strength**	**40 N/mm²**
CONCRETE INFILL	**Contribution factor**	**0.29948**
	Applied axial load	**890 kN**
	Squash resistance	**1182.9 kN**
	Axial resistance	**910.39 kN**
	Applied moment (z-z)	**15 kNm**
	Moment capacity	**46.993 kNm**

Location: Ex1 - CHS concrete filled column with axial load

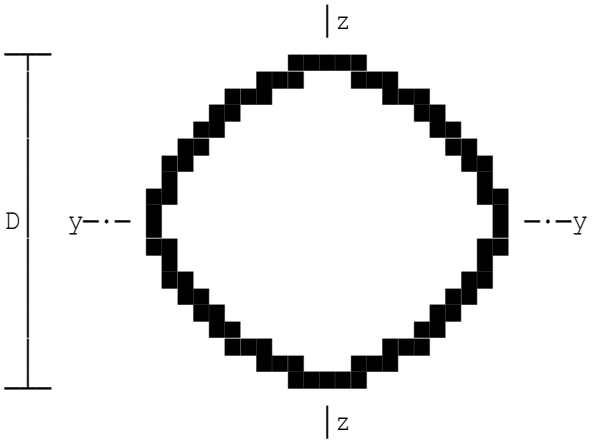

Concrete filled CHS column

Calculations in accordance with 'The Design Guide for Concrete Filled CHS Columns' by Y.C.Wang (2009), EC3 and EC4 Part 1-1.

All loads and moments are factored.

Design moment about major axis	MyEd=0 kNm
Design SF in z direction	VzEd=0 kN
Design axial compressive load	NEd=5500 kN
Length of member	L=3.5 m
Design moment about minor axis	MzEd=0 kNm

406.4 dia x 12.5 thick CHS - Hot finished.
Properties (cm): A=154.68 iy=13.933 Wely=1477.9 Wply=1940.1 Iy=30031
It=60061

Steel γa	gama=1
Concrete γc	gamc=1.5

Length btwn restraints y-y axis	Ly=3.5 m
Length btwn restraints z-z axis	Lz=3.5 m
Effective length factor y-y axis	Ky=1
Effective length factor z-z axis	Kz=1

DESIGN SUMMARY	**Section is satisfactory**	
HOT FINISHED	**In accordance with EN 10210**	
CIRCULAR HOLLOW SECTION	**406.4 O.D x 12.5 CHS**	
WITH CONCRETE INFILL (NWC)	**Cylinder strength**	**32 N/mm²**
	Design axial load	**5500 kN**
	Column axial resistance	**7586.4 kN**

Location: Ex2 - Bending about one axis, other axis restrained

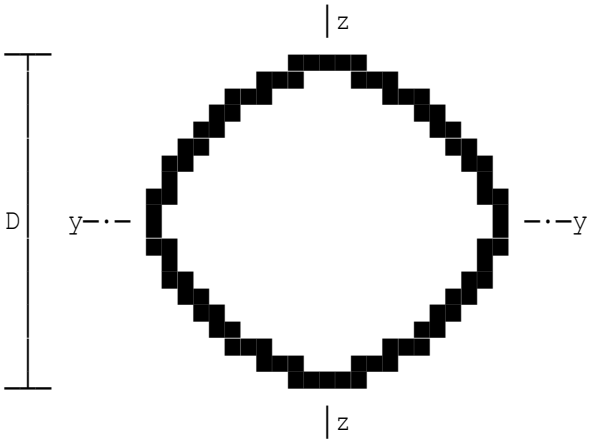

Concrete filled CHS column

Calculations in accordance with 'The Design Guide for Concrete Filled CHS Columns' by Y.C.Wang (2009), EC3 and EC4 Part 1-1.

All loads and moments are factored.

Design moment about major axis	MyEd=50 kNm
Design SF in z direction	VzEd=10 kN
Design axial compressive load	NEd=2500 kN
Length of member	L=5 m
Design moment about minor axis	MzEd=0 kNm

244.5 dia x 16 thick CHS - Hot finished.
Properties (cm): A=114.86 iy=8.0985 Wely=616.19 Wply=836.76 Iy=7532.9
It=15066

Permanent design load	NgEd=1800
Steel γa	gama=1
Concrete γc	gamc=1.5

Length btwn restraints y-y axis	Ly=5 m
Length btwn restraints z-z axis	Lz=0 m
Effective length factor y-y axis	Ky=1
Effective length factor z-z axis	Kz=1
Far end BM	MyEd1=0 kNm

DESIGN SUMMARY	**Section is satisfactory**	
HOT FINISHED	**In accordance with EN 10210**	
CIRCULAR HOLLOW SECTION	**244.5 O.D x 16 CHS**	
WITH CONCRETE INFILL (NWC)	**Cylinder strength**	**32 N/mm²**
	Design axial load	**2500 kN**
	Design moment y-y axis	**130.86 kNm**
	Moment capacity y-y axis	**178.3 kNm**

Location: Ex3 - Bending about both axes

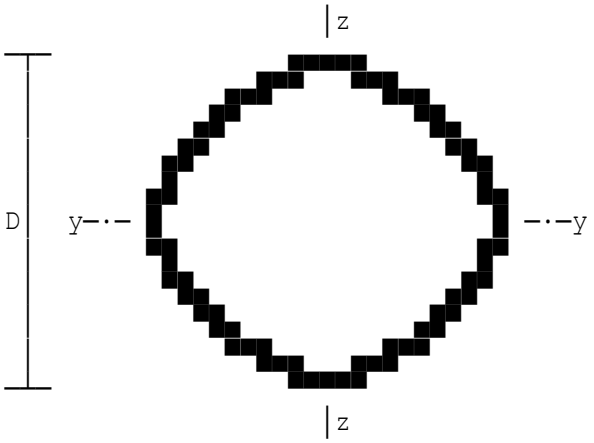

Concrete filled CHS column

Calculations in accordance with 'The Design Guide for Concrete Filled CHS Columns' by Y.C.Wang (2009), EC3 and EC4 Part 1-1.

All loads and moments are factored.

Design moment about major axis	MyEd=100 kNm
Design SF in z direction	VzEd=16.67 kN
Design axial compressive load	NEd=4000 kN
Length of member	L=6 m
Design moment about minor axis	MzEd=50 kNm

355.6 dia x 16 thick CHS - Hot finished.
Properties (cm): A=170.7 iy=12.02 Wely=1387.1 Wply=1846.6 Iy=24663
It=49326

Permanent design load	NgEd=3000
Steel γa	gama=1
Concrete γc	gamc=1.5

Length btwn restraints y-y axis	Ly=6 m
Length btwn restraints z-z axis	Lz=6 m
Effective length factor y-y axis	Ky=0.7
Effective length factor z-z axis	Kz=1
Far end BM	MyEd1=100 kNm
Far end BM	MzEd1=0 kNm

DESIGN SUMMARY	**Section is satisfactory**	
HOT FINISHED	**In accordance with EN 10210**	
CIRCULAR HOLLOW SECTION	**355.6 O.D x 16 CHS**	
WITH CONCRETE INFILL (NWC)	**Cylinder strength**	**32 N/mm²**
	Design axial load	**4000 kN**
	Design moment y-y axis	**100 kNm**
	Moment capacity y-y axis	**442.38 kNm**
	Design moment z-z axis	**50 kNm**
	Moment capacity z-z axis	**442.38 kNm**
	Interaction factors	**0.6154 ≤ 1**
		0.65371 ≤ 1

Location: Ex4 - Bending about one axis, other axis unrestrained

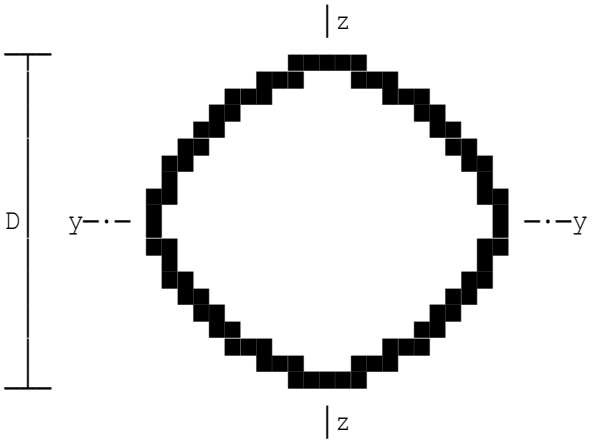

Concrete filled CHS column

Calculations in accordance with 'The Design Guide for Concrete Filled CHS Columns' by Y.C.Wang (2009), EC3 and EC4 Part 1-1.

All loads and moments are factored.

Design moment about major axis	MyEd=15 kNm
Design SF in z direction	VzEd=5.4 kN
Design axial compressive load	NEd=890 kN
Length of member	L=2.8 m
Design moment about minor axis	MzEd=0 kNm

168.3 dia x 5 thick CHS - Hot finished.
Properties (cm): A=25.651 iy=5.7762 Wely=101.7 Wply=133.38 Iy=855.85
It=1711.7

Permanent design load	NgEd=600
Steel γa	gama=1
Concrete γc	gamc=1.5

Length btwn restraints y-y axis	Ly=2.8 m
Length btwn restraints z-z axis	Lz=2.8 m
Effective length factor y-y axis	Ky=0.85
Effective length factor z-z axis	Kz=1
Far end BM	MyEd1=-15 kNm

DESIGN SUMMARY	**Section is satisfactory**	
HOT FINISHED	**In accordance with EN 10210**	
CIRCULAR HOLLOW SECTION	**168.3 O.D x 5 CHS**	
WITH CONCRETE INFILL (NWC)	**Cylinder strength**	**32 N/mm²**
	Design axial load	**890 kN**
	Design moment y-y axis	**20.899 kNm**
	Moment capacity y-y axis	**25.297 kNm**

Location: Ex1 - 300 x 200 x 10 with bar reinforcement

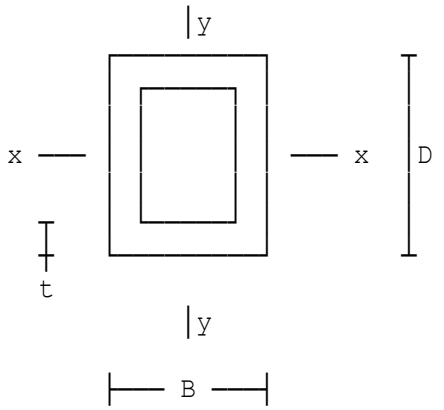

SHS Concrete Filled Columns

Calculations in accordance with British Steel (Corus) publication TD 296 SHS Design Manual for Concrete Filled Columns Part 2: Fire Resistant Design.

All loads and moments are factored, column assumed to be in simple construction.

No external fire protection is provided, protection based on concrete infill.

Axial compressive load	Ff=325 kN
Factored BM about x-x axis	Mfx=23 kNm
Maximum BM about y-y axis	Mfy=2 kNm
Length of member	L=4.5 m

300 x 200 x 10 RHS - Hot finished.
Properties (cm): A=94.9 rx=11.2 Zx=788 Sx=956 Ix=11800
J=12900 C=1020 Zy=628 Sy=721 Iy=6280 ry=8.13

Young's Modulus	E=210 kN/mm²
Characteristic strength	fcu=40 N/mm²
Length btwn restraints x-x axis	Lx=4.5 m
Length btwn restraints y-y axis	Ly=4.5 m
Effective length factor x-x axis	efx=1
Effective length factor y-y axis	efy=1
Reinforcing bar diameter	d=25 mm
Yield strength	fyr=425 N/mm²
Modulus of elasticity (bars)	Er=210 kN/mm²

SUMMARY	**Section is satisfactory**	
HOT FINISHED	**In accordance with EN 10210**	
RECTANGULAR HOLLOW SECTION	**300 x 200 x 10 RHS Grade S 355**	
WITH CONCRETE INFILL	**Cube strength**	**40 N/mm²**
	Period of protection	**60 minutes**
	Axial load	**325 kN**
	Applied moment (x-x)	**23 kNm**
	Applied moment (y-y)	**2 kNm**
	Effective length (x-x)	**4.5 m**
	Effective length (y-y)	**4.5 m**
	Squash resistance	**2071.5 kN**
	Load ratio	**0.42309**
	Limiting load ratio	**0.509**
	Reinforcement:	
	4/25 mm diameter	
	Yield strength	**425 N/mm²**
	cover	**25 mm**

Location: Ex2 - 300 x 300 x 8 SHS with plain/bar reinforcement

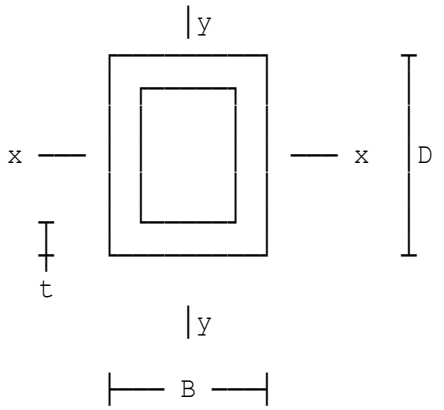

SHS Concrete Filled Columns

Calculations in accordance with British Steel (Corus) publication TD 296 SHS Design Manual for Concrete Filled Columns Part 2: Fire Resistant Design.

All loads and moments are factored, column assumed to be in simple construction.

No external fire protection is provided, protection based on concrete infill.

Axial compressive load	Ff=455 kN
Factored BM about x-x axis	Mfx=34 kNm
Maximum BM about y-y axis	Mfy=8 kNm
Length of member	L=4.8 m

300 x 300 x 8 SHS - Hot finished.
Properties (cm): A=92.8 rz=11.9 Zz=875 Sz=1010 Iz=13100 J=20200 C=1290
(where ry=rx, Zy=Zx, Sy=Sx and Iy=Ix)

Young's Modulus	E=210 kN/mm²
Characteristic strength	fcu=40 N/mm²
Length btwn restraints x-x axis	Lx=4.8 m
Length btwn restraints y-y axis	Ly=4.8 m
Effective length factor x-x axis	efx=0.85
Effective length factor y-y axis	efy=1
Reinforcing bar diameter	d=25 mm
Yield strength	fyr=460 N/mm²
Modulus of elasticity (bars)	Er=210 kN/mm²

SUMMARY	**Section is satisfactory**	
HOT FINISHED	**In accordance with EN 10210**	
SQUARE HOLLOW SECTION	**300 x 300 x 8 SHS Grade S 355**	
WITH CONCRETE INFILL	**Cube strength**	**40 N/mm²**
	Period of protection	**60 minutes**
	Axial load	**455 kN**
	Applied moment (x-x)	**34 kNm**
	Applied moment (y-y)	**8 kNm**
	Effective length (x-x)	**4.08 m**
	Effective length (y-y)	**4.8 m**
	Squash resistance	**2912.9 kN**
	Load ratio	**0.34513**
	Limiting load ratio	**0.509**
	Reinforcement:	
	4/25 mm diameter	
	Yield strength	**460 N/mm²**
	cover	**25 mm**

Location: Ex3 - Circular section with plain infill

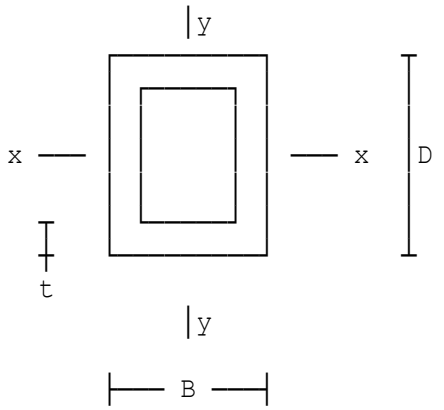

SHS Concrete Filled Columns

Calculations in accordance with British Steel (Corus) publication TD 296 SHS Design Manual for Concrete Filled Columns Part 2: Fire Resistant Design.

All loads and moments are factored, column assumed to be in simple construction.

No external fire protection is provided, protection based on concrete infill.

Axial compressive load	Ff=670 kN
Factored BM about x-x axis	Mfx=14 kNm
Maximum BM about y-y axis	Mfy=14 kNm
Length of member	L=4.75 m

457 dia x 8 thick CHS - Hot finished.
Properties (cm): A=112.85 r=15.877 Z=1244.9 S=1613 I=28446

Young's Modulus	E=210 kN/mm²
Characteristic strength	fcu=40 N/mm²
Length btwn restraints x-x axis	Lx=4.75 m
Length btwn restraints y-y axis	Ly=4.75 m
Effective length factor x-x axis	efx=0.85
Effective length factor y-y axis	efy=0.85

SUMMARY	**Section is satisfactory**	
HOT FINISHED	**In accordance with EN 10210**	
CIRCULAR HOLLOW SECTION	**457 O.D. x 8 CHS Grade S 355**	
WITH CONCRETE INFILL	**Cube strength**	**40 N/mm²**
	Period of protection	**90 minutes**
	Axial load	**670 kN**
	Applied moment (x-x)	**14 kNm**
	Applied moment (y-y)	**14 kNm**
	Effective length (x-x)	**4.0375 m**
	Effective length (y-y)	**4.0375 m**
	Squash resistance	**3900.9 kN**
	Load ratio	**0.28977**
	Limiting load ratio	**0.397**

Location: Ex1 - SCI P259 Example 1 (355.6 x 8 CHS with r'ment)

Calculations are in accordance with EN 1994-1-2 and SCI publication P259 entitled "Fire Resistance of Concrete Filled Tubes to EC4" or SCI publication P159.

No external fire protection is provided, fire protection is based on concrete infill.

Axial compressive load	Nf=2000 kN
Maximum BM about y-y axis	Mfy=60 kNm
Maximum BM about z-z axis	Mfz=10 kNm
Length of member	L=3 m

355.6 dia x 8 thick CHS - Hot finished.
Properties (cm): A=87.361 iy=12.293 Wely=742.48 Wply=966.78 Iy=13201
It=26403

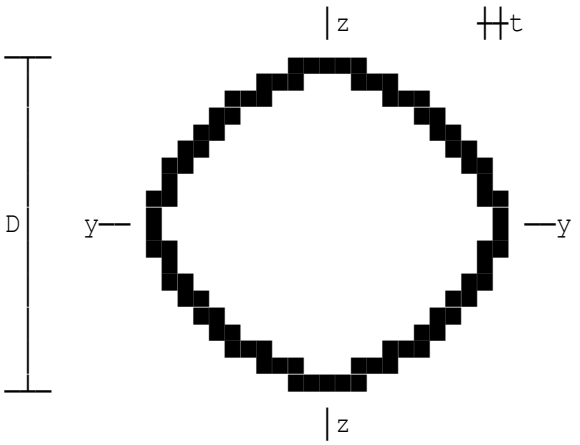

Concrete filled CHS column

All loads and moments are factored, column is assumed to be in simple construction.

D=355.6 mm
t=8 mm

Cylinder characteristic strength fck=35 N/mm²

Effective lengths

Length btwn restraints y-y axis	Ly=3 m
Length btwn restraints z-z axis	Lz=3 m
Effective length factor y-y axis	efy=0.7
Effective length factor z-z axis	efz=0.7
Buckling length of column	l=2.1 m

Moment resistance, stiffness and squash load - reinforced concrete

Provide four main bars with link reinforcement at least a quarter the diameter of the main longitudinal bars.

Buckling resistance

Critical Euler buckling load	Nficr=PI^2*EI/l^2=34828 kN
Non dimensional slenderness λθ	lamt=SQR(NfipRd/Nficr)=0.3449
Reduction coefficient χ	chi=1/(phi+(phi^2-lamt^2)^0.5)=0.9261
Buckling resistance	NfiRd=chi*NfipRd=3836.9 kN

Slenderness check

Consider y-y axis:	
Minimum column moment	M2y=-30 kNm
Slenderness modification factor	ky=1
Consider z-z axis:	
Minimum column moment	M2z=0 kNm
Slenderness modification factor	kz=1

Interaction of axial loads and moments

The interaction of axial compression and bending is checked using the following expression (SCI P259 Section 3.5):

Unity expression R=Nf/NfiRd+ky*Mfy/MfiRd+kz*Mfz/MfiRd=0.90588

As R ≤ 1, section capacity is sufficient.

SUMMARY	**Section is satisfactory**	
HOT FINISHED	**In accordance with BS EN 10210**	
CIRCULAR HOLLOW SECTION	**355.6 O.D. x 8 CHS Grade S 355**	
WITH CONCRETE INFILL	**Cylinder strength**	**35 N/mm²**
	Period of protection	**60 minutes**
	Axial load	**2000 kN**
	Effective length (y-y)	**2.1 m**
	Effective length (z-z)	**2.1 m**
	Applied moment (y-y)	**60 kNm**
	Applied moment (z-z)	**10 kNm**
	Moment resistance	**182 kN**
	Squash resistance	**4143 kN**
	Buckling resistance	**3836.9 kN**
	Reinforcement:	
	4/32 mm diameter (use HY bars)	
	Yield strength	**500 N/mm²**
	Axis distance	**50 mm**
	Minimum link size	**8 mm**
	Maximum link spacing	**480 mm**
	Percentage of r'ment	**3.5516 %**

Location: Ex2 - SCI P259 Example 2 (350 x 350 x 8 SHS with r'ment)

Calculations are in accordance with EN 1994-1-2 and SCI publication P259 entitled "Fire Resistance of Concrete Filled Tubes to EC4" or SCI publication P159.

No external fire protection is provided, fire protection is based on concrete infill.

Axial compressive load	Nf=2000 kN
Maximum BM about y-y axis	Mfy=40 kNm
Maximum BM about z-z axis	Mfz=10 kNm
Length of member	L=3 m

350 x 350 x 8 SHS - Hot finished.
Properties (cm): A=109 iy=13.9 Wely=1210 Wply=1390 Iy=21100 It=32400
Wt=1790

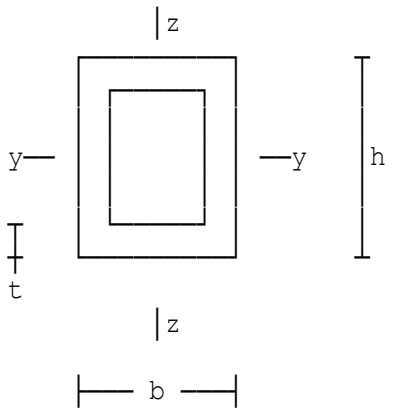

Concrete Filled SHS Column

All loads and moments are factored, column is assumed to be in simple construction.

h=350 mm
b=350 mm
t=8 mm

Cylinder characteristic strength fck=35 N/mm²

Effective lengths

Length btwn restraints y-y axis	Ly=3 m
Length btwn restraints z-z axis	Lz=3 m
Effective length factor y-y axis	efy=1
Effective length factor z-z axis	efz=1
Buckling length of column	l=3 m

Moment resistance, stiffness and squash load - reinforced concrete

Provide four main bars with link reinforcement at least a quarter the diameter of the main longitudinal bars.

Buckling resistance

Critical Euler buckling load	Nficr=PI^2*EI/l^2=24808 kN
Non dimensional slenderness λθ	lamt=SQR(NfipRd/Nficr)=0.41009
Reduction coefficient χ	chi=1/(phi+(phi^2-lamt^2)^0.5)=0.89197
Buckling resistance	NfiRd=chi*NfipRd=3721.3 kN

Slenderness check

Consider y-y axis:	
Minimum column moment	M2y=-20 kNm
Slenderness modification factor	ky=1
Consider z-z axis:	
Minimum column moment	M2z=0 kNm
Slenderness modification factor	kz=1

Interaction of axial loads and moments

The interaction of axial compression and bending is checked using the following expression (SCI P259 Section 3.5):

Unity expression R=Nf/NfiRd+ky*Mfy/MfiRd+kz*Mfz/MfiRd=0.86149

As R ≤ 1, section capacity is sufficient.

SUMMARY	**Section is satisfactory**	
HOT FINISHED	**In accordance with BS EN 10210**	
SQUARE HOLLOW SECTION	**350 x 350 x 8 SHS Grade S 355**	
WITH CONCRETE INFILL	**Cylinder strength**	**35 N/mm²**
	Period of protection	**60 minutes**
	Axial load	**2000 kN**
	Effective length (y-y)	**3 m**
	Effective length (z-z)	**3 m**
	Applied moment (y-y)	**40 kNm**
	Applied moment (z-z)	**10 kNm**
	Moment resistance	**154.3 kN**
	Squash resistance	**4172 kN**
	Buckling resistance	**3721.3 kN**
	Reinforcement:	
	4/25 mm diameter (use HY bars)	
	Yield strength	**500 N/mm²**
	Axis distance	**40 mm**
	Minimum link size	**8 mm**
	Maximum link spacing	**375 mm**
	Percentage of r'ment	**2.241 %**

Location: Ex3 - CHS 457 x 10 CHS with r'ment and 90 min FR

Calculations are in accordance with EN 1994-1-2 and SCI publication P259 entitled "Fire Resistance of Concrete Filled Tubes to EC4" or SCI publication P159.

No external fire protection is provided, fire protection is based on concrete infill.

Axial compressive load	Nf=3500 kN
Maximum BM about y-y axis	Mfy=60 kNm
Maximum BM about z-z axis	Mfz=10 kNm
Length of member	L=3 m

457 dia x 10 thick CHS - Hot finished.
Properties (cm): A=140.43 iy=15.808 Wely=1535.7 Wply=1998.4 Iy=35091
It=70183

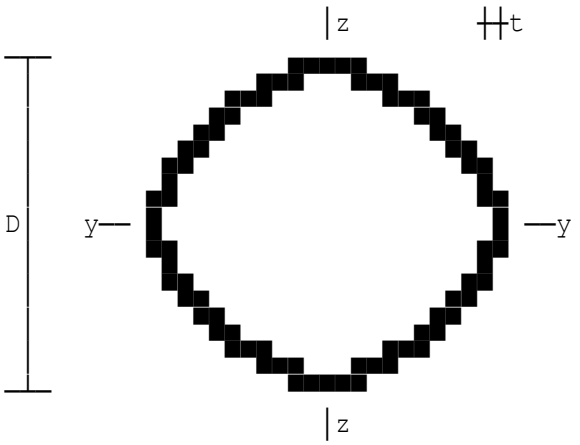

Concrete filled CHS column

All loads and moments are factored, column is assumed to be in simple construction.

D=457 mm
t=10 mm

Cylinder characteristic strength fck=35 N/mm²

Effective lengths

Length btwn restraints y-y axis	Ly=3 m
Length btwn restraints z-z axis	Lz=3 m
Effective length factor y-y axis	efy=0.7
Effective length factor z-z axis	efz=0.7
Buckling length of column	l=2.1 m

Moment resistance, stiffness and squash load - reinforced concrete

Provide four main bars with link reinforcement at least a quarter the diameter of the main longitudinal bars.

Buckling resistance

Critical Euler buckling load	Nficr=PI^2*EI/l^2=75557 kN
Non dimensional slenderness λθ	lamt=SQR(NfipRd/Nficr)=0.2685
Reduction coefficient χ	chi=1/(phi+(phi^2-lamt^2)^0.5)=0.96518
Buckling resistance	NfiRd=chi*NfipRd=5257.3 kN

Slenderness check

Consider y-y axis:	
Minimum column moment	M2y=-30 kNm
Slenderness modification factor	ky=1
Consider z-z axis:	
Minimum column moment	M2z=0 kNm
Slenderness modification factor	kz=1

Interaction of axial loads and moments

The interaction of axial compression and bending is checked using the following expression (SCI P259 Section 3.5):

Unity expression R=Nf/NfiRd+ky*Mfy/MfiRd+kz*Mfz/MfiRd=0.95157

As R ≤ 1, section capacity is sufficient.

SUMMARY	**Section is satisfactory**	
HOT FINISHED	**In accordance with BS EN 10210**	
CIRCULAR HOLLOW SECTION	**457 O.D. x 10 CHS Grade S 355**	
WITH CONCRETE INFILL	**Cylinder strength**	**35 N/mm²**
	Period of protection	**90 minutes**
	Axial load	**3500 kN**
	Effective length (y-y)	**2.1 m**
	Effective length (z-z)	**2.1 m**
	Applied moment (y-y)	**60 kNm**
	Applied moment (z-z)	**10 kNm**
	Moment resistance	**244.9 kN**
	Squash resistance	**5447 kN**
	Buckling resistance	**5257.3 kN**
	Reinforcement:	
	4/32 mm diameter (use HY bars)	
	Yield strength	**500 N/mm²**
	Axis distance	**50 mm**
	Minimum link size	**8 mm**
	Maximum link spacing	**480 mm**
	Percentage of r'ment	**2.1449 %**

Location: Ex4 - CHS with plain infill

Calculations are in accordance with EN 1994-1-2 and SCI publication P259 entitled "Fire Resistance of Concrete Filled Tubes to EC4" or SCI publication P159.

No external fire protection is provided, fire protection is based on concrete infill.

Axial compressive load	Nf=670 kN
Maximum BM about y-y axis	Mfy=14 kNm
Maximum BM about z-z axis	Mfz=14 kNm
Length of member	L=5 m

457 dia x 10 thick CHS - Hot finished.
Properties (cm): A=140.43 iy=15.808 Wely=1535.7 Wply=1998.4 Iy=35091
It=70183

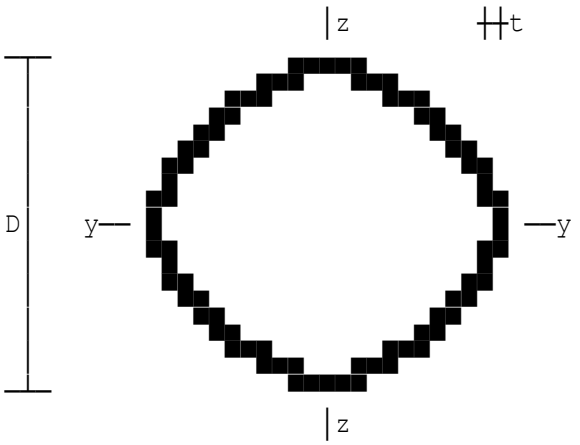

Concrete filled CHS column

All loads and moments are factored, column is assumed to be in simple construction.

D=457 mm
t=10 mm

Cylinder characteristic strength fck=35 N/mm²

Effective lengths

Length btwn restraints y-y axis	Ly=5 m
Length btwn restraints z-z axis	Lz=5 m
Effective length factor y-y axis	efy=0.85
Effective length factor z-z axis	efz=0.85
Buckling length of column	l=4.25 m

Load level ηfi in fire - plain concrete infill

Squash load NRd=7846 kN

Non-dimensional slenderness

Critical Euler buckling load	Nficr=PI^2*EI/l^2=25017 kN
Non dimensional slenderness λθ	lamt=SQR(NfipRd/Nficr)=0.49343

Slenderness check

Consider y-y axis:
Minimum column moment M2y=-7 kNm
Slenderness modification factor ky=1
Consider z-z axis:
Minimum column moment M2z=0 kNm
Slenderness modification factor kz=1

Interaction of axial loads and moments

The interaction of axial compression and bending is checked using the following expression (SCI P259 Section 3.5):

Unity expression R=Nf/NfiRd+ky*Mfy/MfiRd+kz*Mfz/MfiRd=0.3964

As R ≤ 1, section capacity is sufficient.

SUMMARY	**Section is satisfactory**
HOT FINISHED	**In accordance with BS EN 10210**
CIRCULAR HOLLOW SECTION	**457 O.D. x 10 CHS Grade S 355**
WITH CONCRETE INFILL	**Cylinder strength 35 N/mm²**
	Period of protection 60 minutes
	Axial load 670 kN
	Effective length (y-y) 4.25 m
	Effective length (z-z) 4.25 m

Location: Ex5 - SHS with plain infill

Calculations are in accordance with EN 1994-1-2 and SCI publication P259 entitled "Fire Resistance of Concrete Filled Tubes to EC4" or SCI publication P159.

No external fire protection is provided, fire protection is based on concrete infill.

Axial compressive load	Nf=670 kN
Maximum BM about y-y axis	Mfy=14 kNm
Maximum BM about z-z axis	Mfz=14 kNm
Length of member	L=5 m

400 x 400 x 10 SHS - Hot finished.
Properties (cm): A=155 iy=15.9 Wely=1960 Wply=2260 Iy=39100 It=60100
Wt=2900

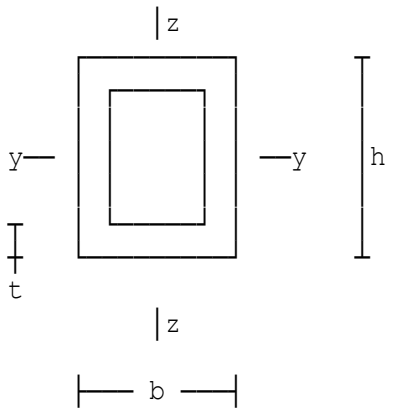

Concrete Filled SHS Column

All loads and moments are factored, column is assumed to be in simple construction.

h=400 mm
b=400 mm
t=10 mm

Cylinder characteristic strength fck=35 N/mm²

Effective lengths

Length btwn restraints y-y axis	Ly=5 m
Length btwn restraints z-z axis	Lz=5 m
Effective length factor y-y axis	efy=0.85
Effective length factor z-z axis	efz=0.85
Buckling length of column	l=4.25 m

Load level ηfi in fire - plain concrete infill

Squash load NRd=8095 kN

Non-dimensional slenderness

Critical Euler buckling load	Nficr=PI^2*EI/l^2=22342 kN
Non dimensional slenderness λθ	lamt=SQR(NfipRd/Nficr)=0.4871

Slenderness check

Consider y-y axis:

Minimum column moment	M2y=-7 kNm
Slenderness modification factor	ky=1

Consider z-z axis:
Minimum column moment M2z=0 kNm
Slenderness modification factor kz=1

Interaction of axial loads and moments

The interaction of axial compression and bending is checked using the following expression (SCI P259 Section 3.5):

Unity expression R=Nf/NfiRd+ky*Mfy/MfiRd+kz*Mfz/MfiRd=0.43196

As R ≤ 1, section capacity is sufficient.

SUMMARY	**Section is satisfactory**
HOT FINISHED	**In accordance with BS EN 10210**
SQUARE HOLLOW SECTION	**400 x 400 x 10 SHS Grade S 355**
WITH CONCRETE INFILL	**Cylinder strength 35 N/mm²**
	Period of protection 60 minutes
	Axial load 670 kN
	Effective length (y-y) 4.25 m
	Effective length (z-z) 4.25 m

Location: Ex1 - Loads and section from TD 296

Calculations are in accordance with 'Joints in Steel Construction Moment Connections' published by The Steel Construction Institute.

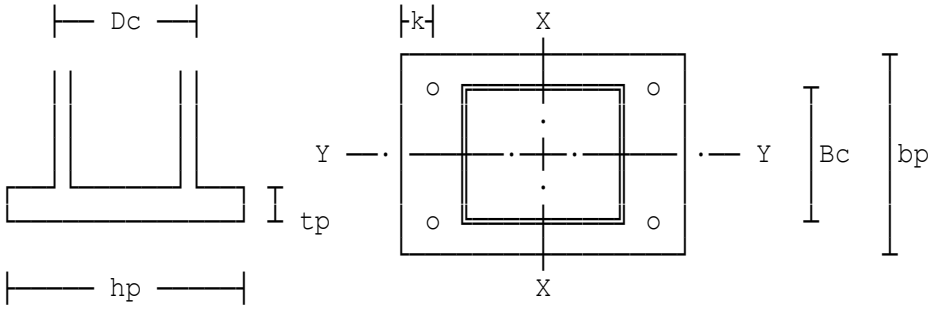

ELEVATION PLAN

Axial load (+ve compression) N=1300 kN
Moment about X-X axis M=150 kNm
Shear on the base in Y direction Fy=80 kN

250 x 150 x 16 RHS - Hot finished.
Properties (cm): A=115 rx=8.79 Zx=710 Sx=906 Ix=8880
J=8870 C=849 Zy=516 Sy=625 Iy=3870 ry=5.8
Length of baseplate hp=450 mm
Breadth of baseplate bp=350 mm
Edge distance to bolt centre line k=50 mm
Assumed fillet weld size sw=8 mm

Strength of concrete fcu=30 N/mm²
Special control must be applied over the placing of the high strength bedding material.
Assumed weld size sw=8 mm
Selected baseplate thickness tp=40 mm

Number of bolts to be used n=4
Bolt diameter bd=20 mm
Selected fillet weld size sw=8 mm

SUMMARY

BASEPLATE	**Size 450 mm x 350 mm x 40 mm**	
REQUIREMENTS	**Grade S 355 steel**	
	Edge distance	**50 mm**
	Number of H.D. bolts	**4**
	Diameter of bolts	**M 20**
	Grade 8.8	
	Concrete/grout (fcu)	**30 N/mm²**
WELDS	**Fillet weld (all round)**	**8 mm**
	Contact areas on the baseplate and column are machined to give a tight bearing contact.	

Location: Ex2 - Large moment SHS

Calculations are in accordance with 'Joints in Steel Construction Moment Connections' published by The Steel Construction Institute.

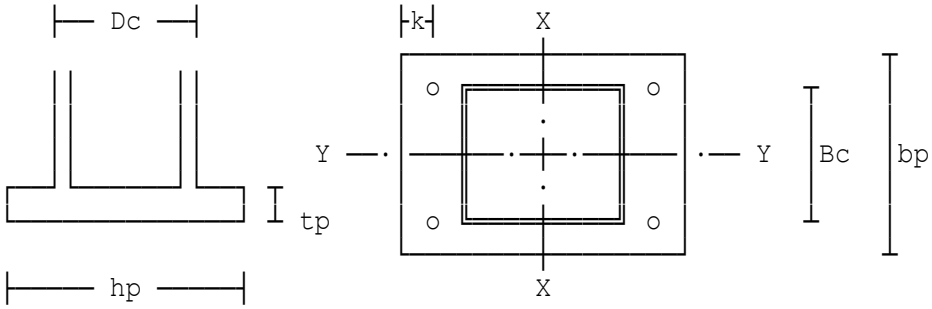

ELEVATION PLAN

Axial load (+ve compression) N=700 kN
Moment about X-X axis M=289 kNm
Shear on the base in Y direction Fy=96 kN

300 x 300 x 12.5 SHS - Hot finished.
Properties (cm): A=142 rx=11.7 Zx=1300 Sx=1530 Ix=19400 J=30300 C=1900
Length of baseplate hp=500 mm
Breadth of baseplate bp=500 mm
Edge distance to bolt centre line k=50 mm
Assumed fillet weld size sw=15 mm

Strength of concrete fcu=50 N/mm²
Special control must be applied over the placing of the high strength bedding material.
Assumed weld size sw=15 mm
Selected baseplate thickness tp=45 mm

Total number of bolts to be used n=6
Assumed diameter of bolt bd=24 mm
Overall embedded depth Lo=450 mm
Assumed cover to reinforcement cv=40 mm
tension reinforcement Asp=0.2 %
Selected fillet weld size sw=15 mm

SUMMARY

BASEPLATE	**Size 500 mm x 500 mm x 45 mm**	
REQUIREMENTS	**Grade S 275 steel**	
	Edge distance	**50 mm**
	Number of H.D. bolts	**6**
	Diameter of bolts	**M 24**
	Grade 8.8	
	Overall embedded depth	**450 mm**
	Anchor plate size:	
	120 mm x 120 mm x 20 mm	
	Concrete/grout (fcu)	**50 N/mm²**
WELDS	**Fillet weld (all round)**	**15 mm**
	Contact areas on the baseplate and column are machined to give a tight bearing contact.	

Location: Ex1 - Loads and section from TD 296

Calculations are in accordance with EC3 Parts 1-1, 1-8 and publication entitled 'Joints in Steel Construction: Simple Joints to EC3' by SCI.

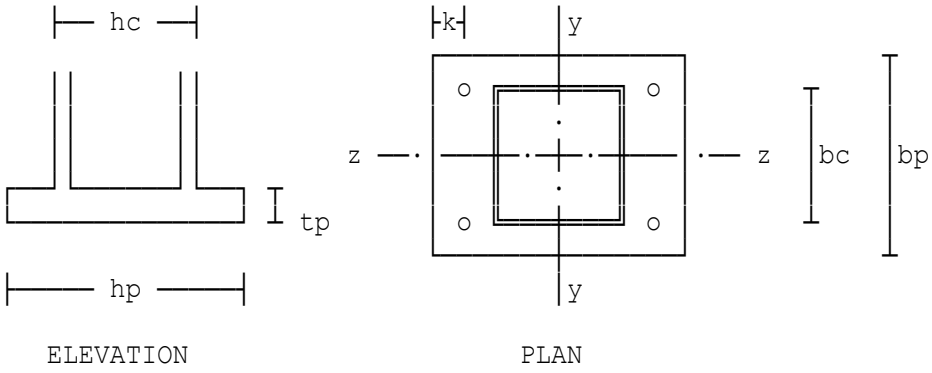

Axial load (+ve compression) NEd=1300 kN
Moment about y-y axis MyEd=150 kNm
Shear on the base in z direction VcEd=80 kN

250 x 150 x 16 RHS - Hot finished.
Properties (cm): A=115 iz=5.8 Wely=710 Wply=906 Iy=8880
It=8870 Wt=849 Welz=516 Wplz=625 Iz=3870 iy=8.79
Length of baseplate hp=450 mm
Breadth of baseplate bp=350 mm
Edge distance to bolt centre line k=50 mm
Characteristic cylinder strength fck=40 N/mm²
Special control must be applied over the placing of the high strength bedding material.
Selected baseplate thickness tp=40 mm
Number of bolts to be used n=4
Bolt diameter bd=20
Selected fillet weld size sw=8 mm

SUMMARY

BASEPLATE	**Size 450 mm x 350 mm x 40 mm**	
REQUIREMENTS	**Grade S 355 steel**	
	Edge distance	**50 mm**
	Number of H.D. bolts	**4**
	Diameter of bolts	**20 mm**
	Grade 8.8	
	Concrete/grout (fck)	**40 N/mm²**
WELDS	**Fillet weld (all round)**	**8 mm**
	Contact areas on the baseplate and column are machined to give a tight bearing contact.	

NOTE: The surfaces of baseplate and end of column are assumed to be machined square to give bearing contact.

Location: Ex2 - Large moment SHS

Calculations are in accordance with EC3 Parts 1-1, 1-8 and publication entitled 'Joints in Steel Construction: Simple Joints to EC3' by SCI.

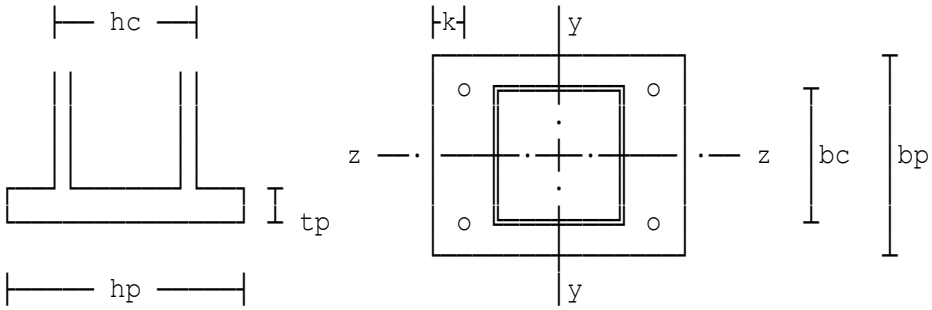

ELEVATION PLAN

Axial load (+ve compression) NEd=700 kN
Moment about y-y axis MyEd=289 kNm
Shear on the base in z direction VcEd=96 kN

300 x 300 x 12.5 SHS - Hot finished.
Properties (cm): A=142 iy=11.7 Wely=1300 Wply=1530 Iy=19400 It=30300
Wt=1900
Length of baseplate hp=500 mm
Breadth of baseplate bp=500 mm
Edge distance to bolt centre line k=50 mm
Characteristic cylinder strength fck=32 N/mm²
Special control must be applied over the placing of the high strength bedding material.
Selected baseplate thickness tp=40 mm
Total number of bolts to be used n=6
Assumed diameter of bolt bd=24 mm
Overall embedded depth Lo=450 mm
Assumed cover to reinforcement cv=40 mm
Assumed percentage area of tension reinforcement Asp=0.2 %
Punching shear force VEd=ABS(FtlEd)=490.73 kN
Shear stress at control perimeter vEd=beta*VEd*1000/(u1*dav)=0.222 N/mm²
Design punching shear resistance vRdc=(0.18/gamc)*k*(100*p1 *fck)^0.333=0.37817 N/mm²
Shear enhancement 2d/av senh=1
The min design punching shear resistance governs and will be adopted.
Design punching shear resistance vRdc=senh*0.035*k^1.5*fck^0.5 =0.43824 N/mm²
As vEd ≤ vRdc (0.222 N/mm² ≤ 0.43824 N/mm²), the anchorage arrangement is considered suitable.

Selected fillet weld size sw=15 mm

SUMMARY

BASEPLATE	**Size 500 mm x 500 mm x 40 mm**	
REQUIREMENTS	**Grade S 275 steel**	
	Edge distance	**1.7 mm**
	Number of H.D. bolts	**6**
	Diameter of bolts	**24 mm**
	Grade 8.8	
	Overall embedded depth	**450 mm**
	Anchor plate size:	
	120 mm x 120 mm x 20 mm	
	Concrete/grout (fck)	**32 N/mm²**
WELDS	**Fillet weld (all round)**	**15 mm**
	Contact areas on the baseplate and column are machined to give a tight bearing contact.	

NOTE: The surfaces of baseplate and end of column are assumed to be machined square to give bearing contact.

Location: Ex1 - Simply supported beam

Beam sizing

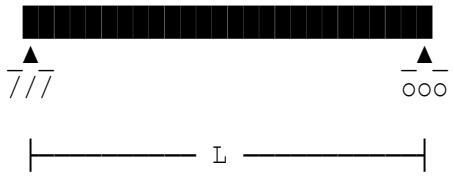

Calculations in accordance with BS5950-1:2000.

Loads are factored. Low shear condition applies.

Beam span	L=6 m
Total factored load	W=200 kN
Factored bending moment	M=W*L/8=150 kNm
Minimum elastic modulus	Z=M*10^3/(py*1.2)=454.55 cm³
For a semi-compact section	
Minimum elastic modulus	Z=M*10^3/py=545.45 cm³

Resistance to lateral-torsional buckling - Clause 4.3.6

For sections of uniform cross-section and for simplicity taking u*v = 0.9 and βw = 1.0 i.e. equivalent slenderness =0.9(lambda) Values of minimum plastic modulus (S) based on slenderness (lambda) and bending strength (pb).

Slenderness	Bending strength(N/mm²)	Plastic modulus (cm³)
38.1	275	545
50	250	600
60	228	657
70	206	729
80	184	817
90	163	923
100	144	1045
110	127	1184
120	112	1339
130	99.4	1509
140	88.6	1693
150	79.3	1891
160	71.3	2103
170	64.5	2327
180	58.5	2565

Location: Ex2 - Axially loaded section

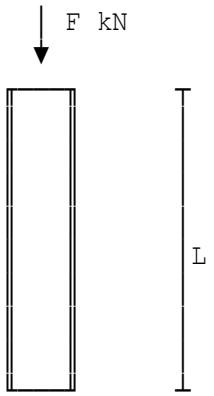

Axially loaded section

Calculations are in accordance with BS5950-1:2000.
Load is factored. Length between restraints is for the weakest axis and end restraint factor 1.0.
Compressive strengths are based on strut buckling curve (c) values.
Section classification is at least semi-compact.

Factored load (comp. positive)	F=1200 kN
Length between restraints	L=6 m

Copyright 1986-2024 Fitzroy Systems Ltd.

Location: Ex3 - Beam check 254 x 146 x 43 UB

Moment capacity of beam subject to lateral load only. Classification of member is assumed to be at least semi-compact.

Factored bending moment	M=108 kNm
Plastic modulus	S=568 cm³
Elastic modulus	Z=505 cm³
Beam length	L=6 m
Length between restraints	Le=2 m
Minimum radius of gyration	r=3.51 cm

Copyright 1986-2024 Fitzroy Systems Ltd.

Location: Ex4 - Column check - 254 x 254 x 89UC

Compressive resistance based on strut curve (c) values. The section classification is assumed to be at least semi-compact. The resistance is based on the length between restraints for the weakest axis and for an effective length factor equal to 1.0.

Factored axial load	F=1200 kN
Length between restraints	L=6 m
Radius of gyration	r=6.52 cm
Area of section	A=114 cm²

Copyright 1986-2024 Fitzroy Systems Ltd.

Location: Ex5 - Check on 254 x 254 x 73 UC

Axial load (compress.positive)	F=425 kN
Moment about x-x axis	Mx=190 kNm
Moment about y-y axis	My=10 kNm
Gross cross-sectional area	A=92.9 cm^2
Plastic modulus x-x axis	Sx=989 cm^3
Plastic modulus y-y axis	Sy=462 cm^3

Location: Ex6 - Safe load table for 457 x 191 x 67 UB

457 x 191 x 67 UB.
Young's Modulus E=205 kN/mm²

Copyright 1986-2024 Fitzroy Systems Ltd.

Location: Ex7 - Safe load table for 610 x 229 UB

610 x 229 x 113 UB.
Young's Modulus E=205 kN/mm²

Copyright 1986-2024 Fitzroy Systems Ltd.

Location: Ex8 - Safe load table for 356 x 171 x 45 UB

356 x 171 x 45 UB.
Young's Modulus E=205 kN/mm²

Location: Ex1 - Simply supported beam

Beam sizing

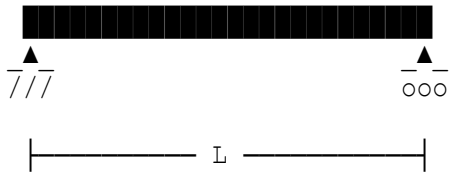

Calculations in accordance with EC3 Part 1-1.

Loads are factored. Low shear condition applies.

Beam span	L=6 m
Total factored load	W=200 kN
Factored bending moment	MyEd=W*L/8=150 kNm
For a plastic or compact section (Class 1 or Class 2),	
Minimum plastic modulus	Wpl=MyEd*10^3/fy=545.45 cm³
For a semi-compact section (Class 3),	
Minimum elastic modulus	Wel=MyEd*10^3/fy=545.45 cm³

Resistance to lateral-torsional buckling

The values in table below are for uniform cross-sections. The minimum plastic modulus Wpl, is based on the section slenderness λ and bending strength sb.

Slenderness λ=Lcr/i	Bending strength (N/mm²)	Minimum plastic modulus (cm³)
38.6	275	545
50	251	597
60	229	654
70	207	724
80	185	810
90	164	913
100	145	1033
110	128	1169
120	114	1321
130	101	1487
140	90	1667
150	80.6	1861
160	72.6	2067
170	65.6	2287
180	59.5	2520

Location: Ex2 - Axially loaded column

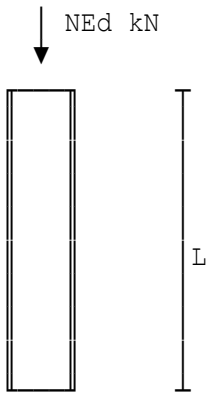

Axially loaded section

Calculations in accordance with BS EN 1993-1-1:2005. The axial load is factored. Length between restraints is for the weakest axis and end restraint factor 1.0. Compressive strengths are based on strut buckling curve c values. Section classification is at least semi-compact.

Factored load (+ compression)	NEd=1200 kN
Length between restraints	L=6 m

Location: Ex3 - Beam check (254 x 146 x 43 UB)

254 x 146 x 43 UKB
Dimensions (mm): h=259.6 b=147.3 tw=7.2 tf=12.7 r=7.6
Properties (cm): Iy=6540 Iz=677 Wply=566 Wplz=141 It=23.9
Moment capacity of beam subject to lateral load only. Classification of member is assumed to be at least semi-compact (i.e. Class 3 or less).

Factored bending moment	MyEd=108 kNm
Beam length	L=6 m
Length between restraints	LT=2 m

Copyright 1986-2024 Fitzroy Systems Ltd.

Location: Ex4 - Column check (254 x 254 x 89 UC)

254 x 254 x 89 UKC
Dimensions (mm): h=260.3 b=256.3 tw=10.3 tf=17.3 r=12.7
Properties (cm): Iy=14300 Iz=4860 Wply=1220 Wplz=575 It=102
Section classification is assumed to be at least semi-compact. The resistance is based on the length between restraints for the weakest axis and for an effective length factor equal to 1.0.

Factored axial load	NEd=1200 kN
Length between restraints	L=6 m

Copyright 1986-2024 Fitzroy Systems Ltd.

Location: Ex5 - Check on 254 x 254 x 73 UC

Axial load (+ compression)	NEd=425 kN
Moment about y-y axis	MyEd=190 kNm
Moment about z-z axis	MzEd=10 kNm
Gross cross-sectional area	A=92.9 cm^2
Plastic modulus y-y axis	Wply=989 cm^3
Plastic modulus z-z axis	Wplz=462 cm^3

Copyright 1986-2024 Fitzroy Systems Ltd.

Location: Ex6 -Safe load table for 457 x 191 x 67 UB

457 x 191 x 67 UKB
Dimensions (mm): h=453.4 b=189.9 tw=8.5 tf=12.7 r=10.2
Properties (cm): Iy=29400 Iz=1450 Wply=1470 Wplz=237 It=37.1

Copyright 1986-2024 Fitzroy Systems Ltd.

Location: Ex7 - Safe load table for 610 x 229 x 113 UB

610 x 229 x 113 UKB
Dimensions (mm): h=607.6 b=228.2 tw=11.1 tf=17.3 r=12.7
Properties (cm): Iy=87300 Iz=3430 Wply=3280 Wplz=469 It=111

Location: Ex1 - Based on 'Steelwork Design Guide' example 2

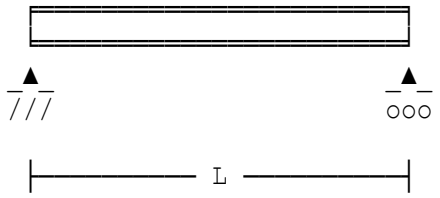

Simply supported steel beam

Calculations are in accordance with BS5950-1:2000.

Beam span	L=9 m
533 x 210 x 82 UB.	
Young's Modulus	E=205 kN/mm²
Dead load factor	gamd=1.4
Imposed load factor	gami=1.6
Distance from left support	Lc(1)=3 m
Dead load (unfactored)	Gkc(1)=40 kN
Imposed load (unfactored)	Qkc(1)=60 kN
Distance from left support	Lc(2)=6 m
Dead load (unfactored)	Gkc(2)=20 kN
Imposed load (unfactored)	Qkc(2)=30 kN
Dist. from left support to start	Lau(1)=0 m
Distance from left support to end	Lbu(1)=9 m
Dead load (unfactored)	Gku(1)=3 kN/m
Imposed load (unfactored)	Qku(1)=0 kN/m
Maximum span bending moment	414.9 kNm
Design shear force	Fv=145.57 kN
Length of beam between restraints	LT=3 m
Maximum moment on segment	Me=414.9 kNm
Far end BM	betaM=334 kNm
Force applied through flange	Fbw=145.57 kN
Stiff bearing length	b1=50 mm
Distance to nearer end	be=0 mm
Distance to nearer end of member	ae=25 mm
Assumed ratio of Mf/M	Rf=0.55

UNIVERSAL BEAM	**533 x 210 x 82 UB Grade S 275**	
DESIGN SUMMARY	**Maximum shear force**	**145.57 kN**
	Shear capacity	**836.83 kN**
	Max. applied moment	**414.9 kNm**
	Moment capacity	**566.5 kNm**
	Buckling resistance	**452.86 kNm**
	Moment factor (mLT)	**0.92201**
	Resistance (Mb/mLT)	**491.17 kNm**
	Unfactored DL defln	**10.604 mm**
	Unfactored LL defln	**11.958 mm**
	Limiting deflection	**25 mm**
Unfactored end shears	**DL shear at LHE**	**46.833 kN**
	LL shear at LHE	**50 kN**
	DL shear at RHE	**40.167 kN**
	LL shear at RHE	**40 kN**

FIRE RESISTANCE SUMMARY

Applied flange force	**145.57 kN**
Local web capacity	**268.75 kN**
Web buckling capacity	**157.4 kN**
Heated perimeter	**1872.6 mm²**
Area of section	**105 cm²**
Section factor	**175**
Load Ratio (R)	**0.46459**

The section does not have an inherent fire resistance of 30 minutes. Fire protection should be provided.

Location: Ex2 - Using parallel flange channel

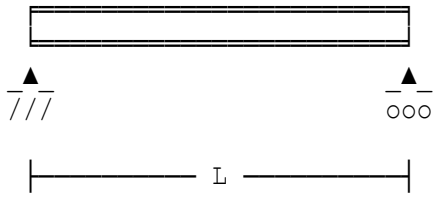

Simply supported steel beam

Calculations are in accordance with BS5950-1:2000.

Beam span	L=5 m
380 x 100 Parallel Flange Channel.	
Young's Modulus	E=205 kN/mm²
Dead load factor	gamd=1.4
Imposed load factor	gami=1.6
Dist. from left support to start	Lau(1)=0 m
Distance from left support to end	Lbu(1)=5 m
Dead load (unfactored)	Gku(1)=9 kN/m
Imposed load (unfactored)	Qku(1)=12 kN/m
Maximum span bending moment	99.375 kNm
Design shear force	Fv=79.5 kN
Assumed ratio of Mf/M	Rf=0.5

PARALLEL FLANGE CHANNEL DESIGN SUMMARY		**380 x 100 Grade S 275**	
		Maximum shear force	**79.5 kN**
		Shear capacity	**573.99 kN**
		Max. applied moment	**99.375 kNm**
		Moment capacity	**247.25 kNm**
		Buckling resistance	**125.3 kNm**
		Moment factor (mLT)	**0.925**
		Resistance (Mb/mLT)	**135.45 kNm**
		Unfactored DL defln	**2.3819 mm**
		Unfactored LL defln	**3.1758 mm**
		Limiting deflection	**13.889 mm**
	Unfactored end shears	**DL shear at LHE**	**22.5 kN**
		LL shear at LHE	**30 kN**
		DL shear at RHE	**22.5 kN**
		LL shear at RHE	**30 kN**
FIRE RESISTANCE SUMMARY		**Heated perimeter**	**1041 mm²**
		Area of section	**68.7 cm²**
		Section factor	**150**
		Load Ratio (R)	**0.36682**
		The section does not have an inherent fire resistance of 30 minutes. Fire protection should be provided.	

Location: Ex1 - Based on 'Steelwork Design Guide' example 2

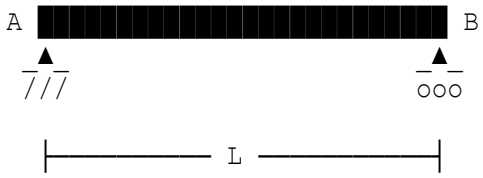

Simply supported steel beam

Calculations in accordance with BS EN 1993-1-1:2005.

Beam span L=9 m

533 x 210 x 82 UKB
Dimensions (mm): h=528.3 b=208.8 tw=9.6 tf=13.2 r=12.7
Properties (cm): Iy=47500 Iz=2010 Wply=2060 Wplz=300 It=51.5

Permanent UDL (including S.W)	wd=3 kN/m
Variable UDL	wi=0 kN/m
Permanent point load 1 (+ve down)	W1d=40 kN
Variable point load 1	W1i=60 kN
Distance from L.H. supp to load 1	x1=3 m
Permanent point load 2 (+ve down)	W2d=20 kN
Variable point load 2	W2i=30 kN
Distance from L.H. supp to load 2	x2=6 m
Maximum moment on segment	Mec=396.45 kNm
Far end BM	psiM=324 kNm
Eff.length between restraints	LT=3 m
Stiff bearing length	ss=50 mm
Stiff bearing position	C=0 mm

UNIVERSAL BEAM DESIGN SUMMARY

533 x 210 x 82 UB Grade S 275

	Maximum shear force	**138.22 kN**
	Shear plastic resist.	**865.25 kN**
	Design moment	**396.45 kNm**
	Moment resistance	**566.5 kNm**
	Buckling resistance	**478.91 kNm**
	Central deflection	**11.673 mm**
	Limiting deflection	**25 mm**
Factored end shears	**Factored shear at A**	**138.22 kN**
	Factored shear at B	**114.22 kN**

Location: Ex2- Using parallel flange channel

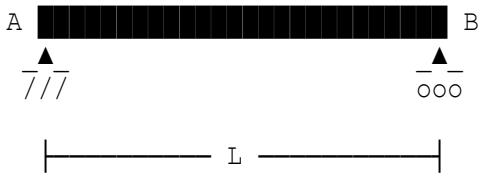

Simply supported steel beam

Calculations in accordance with BS EN 1993-1-1:2005.

Beam span L=4.9 m

380 x 100 UKPFC
Dimensions (mm): h=380 b=100 tw=9.5 tf=17.5 r=15
Properties (cm): Iy=15000 Iz=643 Wply=933 Wplz=161 It=45.7

Permanent UDL (including S.W)	wd=9 kN/m
Variable UDL	wi=12 kN/m
Eff.length between restraints	LT=6.16 m
Stiff bearing length	ss=50 mm
Stiff bearing position	C=0 mm

PARALLEL FLANGE CHANNEL DESIGN SUMMARY

	380 x 100 Grade S 275	
	Maximum shear force	**73.868 kN**
	Shear plastic resist.	**581.2 kN**
	Design moment	**90.488 kNm**
	Moment resistance	**247.25 kNm**
	Buckling resistance	**92.123 kNm**
	Central deflection	**2.8595 mm**
	Limiting deflection	**13.611 mm**
Factored end shears	**Factored shear at A**	**73.868 kN**
	Factored shear at B	**73.868 kN**

Location: Example 2, 'Steelwork Design Guide' with additional loads

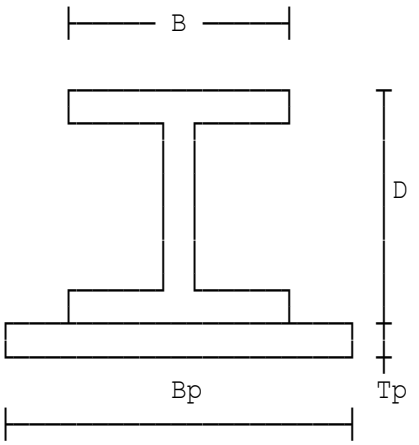

Simply supported beam

strengthened by plate

welded to bottom flange

Calculations are in accordance with BS5950 Part 1:2000

Beam span	L=9 m
457 x 191 x 89 UB.	
Young's Modulus	E=205 kN/mm²
Thickness of plate	Tp=15 mm
Width of plate	Bp=170 mm
Dead load factor	gamd=1.4
Imposed load factor	gami=1.6
Distance from left support	Lc(1)=3 m
Dead load (unfactored)	Gkc(1)=60 kN
Imposed load (unfactored)	Qkc(1)=80 kN
Distance from left support	Lc(2)=6 m
Dead load (unfactored)	Gkc(2)=40 kN
Imposed load (unfactored)	Qkc(2)=50 kN
Dist. from left support to start	Lau(1)=0 m
Distance from left support to end	Lbu(1)=9 m
Dead load (unfactored)	Gku(1)=3 kN/m
Imposed load (unfactored)	Qku(1)=0 kN/m
Maximum span bending moment	594.9 kNm
Design shear force	Fv=205.57 kN
Beam is FULLY RESTRAINED	
Weld leg length	s=6 mm

UNIVERSAL BEAM	**457 x 191 x 89 UB Grade S 275**	
BOTTOM PLATE	**170 mm x 15 mm**	**Grade S 275**
	connected using 6 mm fillet welds	
DESIGN SUMMARY	**Shear force**	**205.57 kN**
	Shear capacity	**773.65 kN**
	Applied moment	**594.9 kNm**
	Moment capacity	**611.04 kNm**
	Unfactored DL defln	**14.287 mm**
	Unfactored LL defln	**15.502 mm**
	Limiting deflection	**25 mm**
Unfactored end shears	**DL shear at LHE**	**66.833 kN**
	LL shear at LHE	**70 kN**
	DL shear at RHE	**60.167 kN**
	LL shear at RHE	**60 kN**

Location: Ex1 - From 'Steelwork Design Guide' example 2

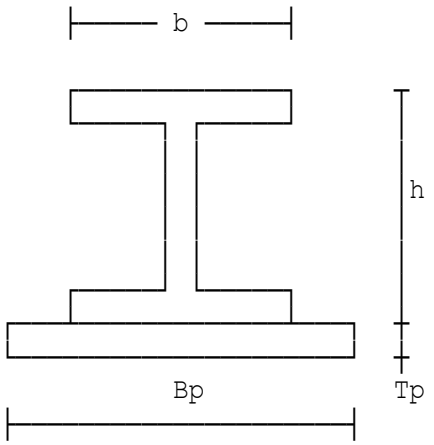

Simply supported beam

strengthened by plate

welded to bottom flange

Calculations are in accordance with EC3 Part 1-1:2005.

Beam span L=9 m

457 x 191 x 89 UKB
Dimensions (mm): h=463.4 b=191.9 tw=10.5 tf=17.7 r=10.2
Properties (cm): Iy=41000 Iz=2090 Wply=2010 Wplz=338 It=90.7

Thickness of plate	Tp=15 mm
Width of plate	Bp=170 mm
Permanent UDL (including S.W)	wd=3 kN/m
Variable UDL	wi=0 kN/m
Permanent point load 1 (+ve down)	W1d=60 kN
Variable point load 1	W1i=80 kN
Distance from L.H. supp to load 1	x1=3 m
Permanent point load 2 (+ve down)	W2d=40 kN
Variable point load 2	W2i=50 kN
Distance from L.H. supp to load 2	x2=6 m
Stiff bearing length	ss=50 mm
Stiff bearing position	C=0 mm
Fillet weld size (leg length)	s=6 mm

UNIVERSAL BEAM	**457 x 191 x 89 UKB Grade S 275**	
BOTTOM PLATE	**170 mm x 15 mm Grade S 275**	
DESIGN SUMMARY	**Maximum shear force**	**195.23 kN**
	Shear plastic resist.	**788.5 kN**
	Design moment	**567.45 kNm**
	Moment capacity	**649.22 kNm**
	Central deflection	**15.133 mm**
	Limiting deflection	**25 mm**
Factored end shears	**Design shear LH support**	**195.23 kN**
	Design shear RH support	**171.23 kN**

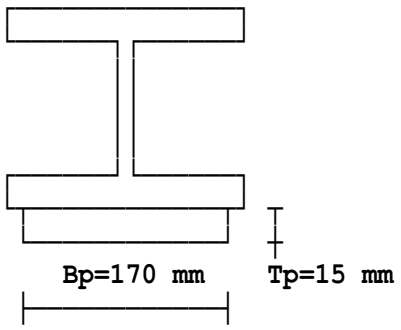

- **Fillet welds to be used for connecting bottom plate to I-Section**
- **Weld sizes 6 mm**
- **Weld design strength to be 222 N/mm²**

Location: Ex2 - UDL load only applied to beam

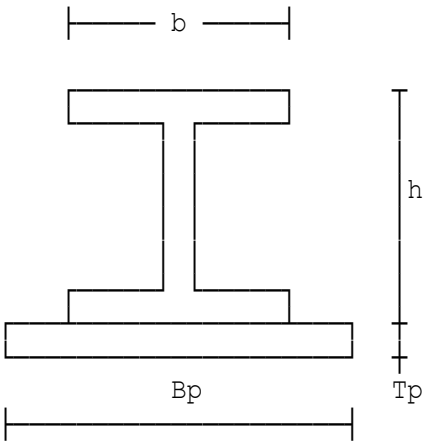

Simply supported beam

strengthened by plate

welded to bottom flange

Calculations are in accordance with EC3 Part 1-1:2005.

Beam span L=6 m

457 x 191 x 89 UKB
Dimensions (mm): h=463.4 b=191.9 tw=10.5 tf=17.7 r=10.2
Properties (cm): Iy=41000 Iz=2090 Wply=2010 Wplz=338 It=90.7

Thickness of plate	Tp=15 mm
Width of plate	Bp=170 mm
Permanent UDL (including S.W)	wd=9 kN/m
Variable UDL	wi=12 kN/m
Eff.length between restraints	LT=6.4 m
Fillet weld size (leg length)	s=6 mm

UNIVERSAL BEAM	**457 x 191 x 89 UKB Grade S 275**	
BOTTOM PLATE	**170 mm x 15 mm Grade S 275**	
DESIGN SUMMARY	**Maximum shear force**	**90.45 kN**
	Shear plastic resist.	**788.5 kN**
	Design moment	**135.68 kNm**
	Moment capacity	**649.22 kNm**
	Buckling resistance	**304.31 kNm**
	Central deflection	**1.822 mm**
	Limiting deflection	**16.667 mm**
Factored end shears	**Design shear LH support**	**90.45 kN**
	Design shear RH support	**90.45 kN**

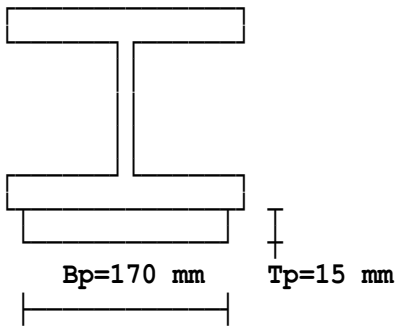

- **Fillet welds to be used for connecting bottom plate to I-Section**
- **Weld sizes 6 mm**
- **Weld design strength to be 222 N/mm²**

Location: Ex1 - 'Steelwork Design Guide' Example 4

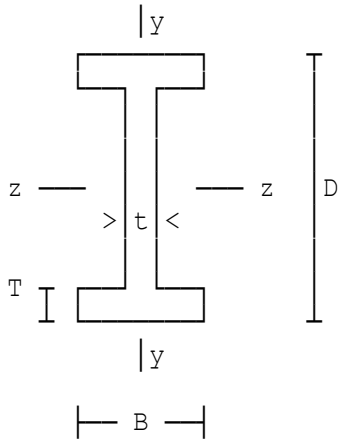

I section beam

Calculations in accordance with BS5950-1:2000.

All loads and moments are factored.

Design moment about z-z axis	Mz=282 kNm
Design shear force	Fv=152 kN
Design axial load (+ve comp)	F=0 kN
Length of member	L=9 m

457 x 152 x 52 UB.

Young's Modulus	E=205 kN/mm²

Restraint assumptions

Length between restraints	LT=3 m
Maximum moment on segment	MLT=282 kNm
Far end BM	betaM=-158 kNm

UNIVERSAL BEAM SECTION SUMMARY	**457 x 152 x 52 UB Grade S 275 Section is satisfactory for axial, bending, shear, and local capacity, and overall buckling checks.**	
	Factored shear force	**152 kN**
DESIGN SUMMARY	**Shear capacity**	**564.05 kN**
	Factored moment	**282 kNm**
	Moment capacity	**302.5 kNm**
	Buckling resistance	**244.17 kNm**
	Moment factor mLT	**0.44**
	Resistance (Mb/mLT)	**554.92 kNm**

Location: Ex2 - 'Steelwork Design Guide' Example 5

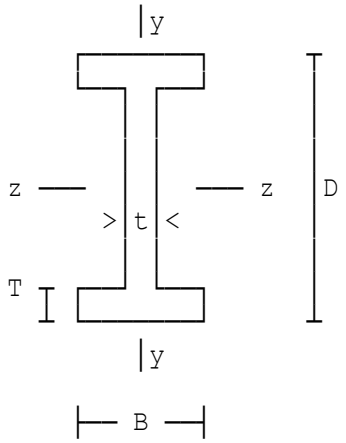

I section beam

Calculations in accordance with BS5950-1:2000.

All loads and moments are factored.

Design moment about z-z axis	Mz=282 kNm
Design shear force	Fv=152 kN
Design axial load (+ve comp)	F=0 kN
Length of member	L=9 m

457 x 191 x 82 UB.

Young's Modulus	E=205 kN/mm²

Restraint assumptions

Length between restraints	LT=9 m
Quarter point	m2=48 kNm
Mid-span	m3=126 kNm
Three quarter point	m4=12.75 kNm
Maximum Moment on segment	MLT=282 kNm

UNIVERSAL BEAM	**457 x 191 x 82 UB Grade S 275**	
SECTION	**Section is satisfactory for axial,**	
SUMMARY	**bending, shear, and local capacity,**	
	and overall buckling checks.	
	Factored shear force	**152 kN**
DESIGN	**Shear capacity**	**751.41 kN**
SUMMARY	**Factored moment**	**282 kNm**
	Moment capacity	**503.25 kNm**
	Buckling resistance	**205.85 kNm**
	Moment factor mLT	**0.45572**
	Resistance (Mb/mLT)	**451.71 kNm**

Location: Ex3 - Built-in beam carrying a concrete slab

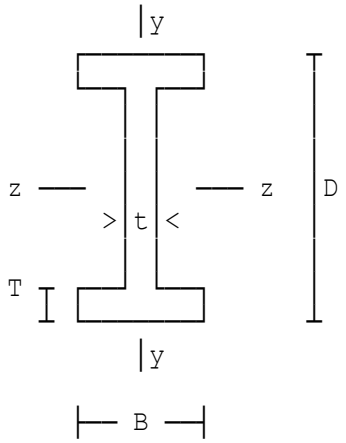

I section beam

Calculations in accordance with BS5950-1:2000.

All loads and moments are factored.

Design moment about z-z axis	Mz=101.03 kNm
Design shear force	Fv=65.505 kN
Design axial load (+ve comp)	F=13.743 kN
Length of member	L=10 m

305 x 165 x 46 UB.

Young's Modulus	E=205 kN/mm²
Buckling about major axis	Lz=7150 mm
Buckling about minor axis	Ly=1860 mm

Restraint assumptions

restraints to both flanges	Ly=1860 mm
Distance between ref. axes	a'=290 mm
Start end restraint	R1=101 kNm
Quarter point	R2=69.8 kNm
Mid-length	R3=41.5 kNm
Three quarter point	R4=16.3 kNm
End restraint	R5=0 kNm
Largest value of moment	RS=101 kNm
Span of beam for deflection	Ld=10000 mm

DEFLECTION OK.

UNIVERSAL BEAM SECTION SUMMARY	**305 x 165 x 46 UB Grade S 275**	
	Section is satisfactory for axial, bending, shear, and local capacity, and overall buckling checks.	
	Factored shear force	**65.505 kN**
DESIGN SUMMARY	**Shear capacity**	**338.95 kN**
	Factored moment	**101.03 kNm**
	Moment capacity	**198 kNm**
	Compressive axial load	**13.743 kN**
	Compressive resistance	**1414.9 kN**
	Local capacity check	**0.51877 ≤ 1**
	Overall buckling check	**0.51997 ≤ 1**
	Deflection	**5.1326 mm**

Location: Ex4 - Propped cantilever with point loads (UB Section)

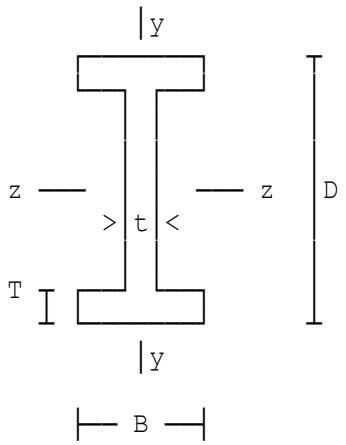

I section beam

Calculations in accordance with BS5950-1:2000.

All loads and moments are factored.

Design moment about z-z axis	Mz=360 kNm
Design shear force	Fv=160 kN
Design axial load (+ve comp)	F=200 kN
Length of member	L=9 m

457 x 191 x 74 UB.

Young's Modulus	E=205 kN/mm²
Buckling about major axis	Lz=9000 mm
Buckling about minor axis	Ly=2250 mm

Restraint assumptions

restraints to both flanges	Ly=2250 mm
Distance between ref. axes	a'=290 mm
Larger end moment	BM=360 kNm
Smaller end moment	Ms=0 kNm
Length between restraints	LT=2.25 m
Maximum moment on segment	MLT=360 kNm
Far end BM	betaM=120 kNm
Quarter point	mz2=180 kNm
Mid-span	mz3=180 kNm
Three quarter point	mz4=0 kNm
Maximum moment on central half	M24=240 kNm

UNIVERSAL BEAM SECTION SUMMARY	**457 x 191 x 74 UB Grade S 275**	
	Section is satisfactory for axial, bending, shear, and local capacity, and overall buckling checks.	
	Factored shear force	**160 kN**
DESIGN SUMMARY	**Shear capacity**	**678.65 kN**
	Factored moment	**360 kNm**
	Moment capacity	**453.75 kNm**
	Compressive axial load	**200 kN**
	Compressive resistance	**2204.5 kN**
	Local capacity check	**0.87027 ≤ 1**
	Overall buckling check	**0.54672 ≤ 1**
	Overall buckling check	**0.53812 ≤ 1**
		0.73487 ≤ 1

Location: Ex5 - Channel section (tensile load)

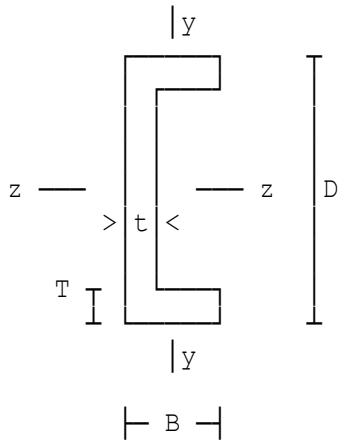

Channel Section Beam

Calculations in accordance with BS5950-1:2000.

All loads and moments are factored.

Design moment about z-z axis	Mz=187.5 kNm
Design shear force	Fv=150 kN
Design axial load (+ve comp)	F=-200 kN
Length of member	L=5 m
380 x 100 Parallel Flange Channel.	
Young's Modulus	E=205 kN/mm²
Estimated net area (tension)	Ae=68.7 cm²

PARALLEL FLANGE CHANNEL	**380 x 100 Grade S 275**	
SECTION	**Section is satisfactory for axial,**	
SUMMARY	**bending, shear, and local capacity,**	
	and overall buckling checks.	
	Factored shear force	**150 kN**
DESIGN	**Shear capacity**	**573.99 kN**
SUMMARY	**Factored moment**	**187.5 kNm**
	Moment capacity	**247.25 kNm**
	Tensile axial load	**200 kN**
	Tensile capacity	**1820.6 kN**
	Local capacity check	**0.86821 ≤ 1**

Location: Ex6 - 'Steelwork Design Guide' Example 4 (fire check)

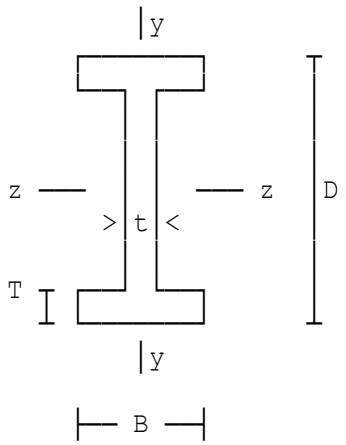

I section beam

Calculations in accordance with BS5950-1:2000.

All loads and moments are factored.

Design moment about z-z axis	Mz=282 kNm
Design shear force	Fv=152 kN
Design axial load (+ve comp)	F=0 kN
Length of member	L=9 m

457 x 152 x 52 UB.

Young's Modulus	E=205 kN/mm²

Restraint assumptions

Length between restraints	LT=3 m
Maximum moment on segment	MLT=282 kNm
Far end BM	betaM=-158 kNm
values to applied factored values	Rf=0.6

UNIVERSAL BEAM	**457 x 152 x 52 UB Grade S 275**	
SECTION	**Section is satisfactory for axial,**	
SUMMARY	**bending, shear, and local capacity,**	
	and overall buckling checks.	
	Factored shear force	**152 kN**
DESIGN	**Shear capacity**	**564.05 kN**
SUMMARY	**Factored moment**	**282 kNm**
	Moment capacity	**302.5 kNm**
	Buckling resistance	**244.17 kNm**
	Moment factor mLT	**0.44**
	Resistance (Mb/mLT)	**554.92 kNm**
FIRE RESISTANCE	**Heated perimeter**	**1494 mm²**
SUMMARY	**Area of section**	**66.6 cm²**
	Section factor	**220 /m**
	Load Ratio (R)	**0.55934**
	Section does not have an inherent	
	fire resistance of 30 minutes.	
	Fire protection should be provided	

Location: Example 12 Steel Building Design

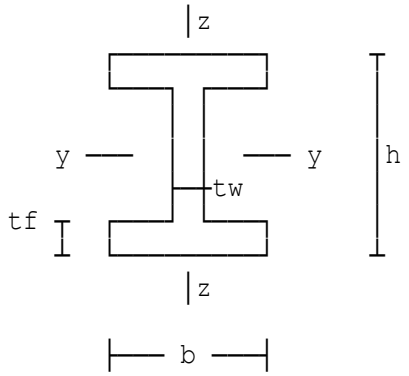

Open Section Beam

Calculations in accordance with BS EN 1993-1-1:2005. Internal forces and moments have been determined by elastic global analysis.

All forces and moments are factored.

Design moment about major axis	MyEd=146 kNm
Design shear force	VzEd=46 kN
Design axial load (+ve comp)	NEd=1100 kN
Length of member	L=6 m

457 x 191 x 67 UKB
Dimensions (mm): h=453.4 b=189.9 tw=8.5 tf=12.7 r=10.2
Properties (cm): Iy=29400 Iz=1450 Wply=1470 Wplz=237 It=37.1

Effective length parameter	K=1
Length for LTB	LT=3 m
Maximum moment on section	M=146 kNm
Far end moment	psiM=0 kNm
Maximum end moment	Mh(1)=0 kNm
Maximum span moment	Ms(1)=146 kNm
End moment	pMh(1)=0 kNm
Maximum end moment	Mh(2)=146 kNm
Maximum span moment	Ms(2)=79 kNm
End moment	pMh(2)=0 kNm

SECTION	**457 x 191 x 67 UKB Grade**	**S 355**
DESIGN	**Design compression load**	**1100 kN**
SUMMARY	**Axial resistance**	**3035.3 kN**
	Buckling resistance	**1902.5 kN**
	Design BM y-y axis	**146 kNm**
	Moment resistance (y-y)	**460.39 kNm**
	Interaction factors	**0.69607 ≤ 1**
		0.87247 ≤ 1

Location: Class 1 section design

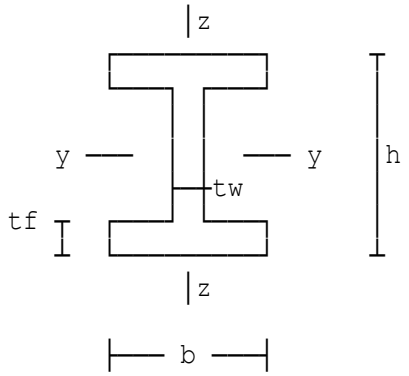

Open Section Beam

Calculations in accordance with BS EN 1993-1-1:2005. Internal forces and moments have been determined by elastic global analysis.

All forces and moments are factored.

Design moment about major axis	MyEd=646 kNm
Design shear force	VzEd=226 kN
Design axial load (+ve comp)	NEd=900 kN
Length of member	L=8 m

533 x 312 x 151 UKB
Dimensions (mm): h=542.5 b=312 tw=12.7 tf=20.3 r=12.7
Properties (cm): Iy=101000 Iz=10300 Wply=4150 Wplz=1010 It=216

Effective length parameter	K=0.85
Length for LTB	LT=8 m
Correction factor	kc=0.9
Maximum end moment	Mh(1)=646 kNm
Maximum span moment	Ms(1)=-323 kNm
End moment	pMh(1)=646 kNm
Maximum end moment	Mh(2)=646 kNm
Maximum span moment	Ms(2)=-323 kNm
End moment	pMh(2)=646 kNm

SECTION	**533 x 312 x 151 UKB Grade S 275**	
DESIGN	**Design compression load**	**900 kN**
SUMMARY	**Axial resistance**	**5088 kN**
	Buckling resistance	**2337.8 kN**
	Design BM y-y axis	**646 kNm**
	Moment resistance (y-y)	**1099.8 kNm**
	Interaction factors	**0.53217 ≤ 1**
		0.96614 ≤ 1

Location: High axial load and moment

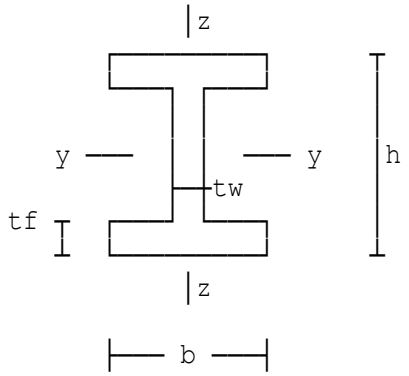

Open Section Beam

Calculations in accordance with BS EN 1993-1-1:2005. Internal forces and moments have been determined by elastic global analysis.

All forces and moments are factored.

Design moment about major axis	MyEd=323 kNm
Design shear force	VzEd=126 kN
Design axial load (+ve comp)	NEd=2000 kN
Length of member	L=6 m

305 x 305 x 158 UKC
Dimensions (mm): h=327.1 b=311.2 tw=15.8 tf=25 r=15.2
Properties (cm): Iy=38800 Iz=12600 Wply=2680 Wplz=1230 It=378

Effective length parameter	K=0.85
Length for LTB	LT=6 m
Maximum moment on section	M=323 kNm
Far end moment	psiM=-323 kNm
Far end bending moment	pM(1)=-323 kNm
Far end bending moment	pM(2)=-323 kNm

SECTION	**305 x 305 x 158 UKC Grade S 275**	
DESIGN	**Design compression load**	**2000 kN**
SUMMARY	**Axial resistance**	**5326.5 kN**
	Buckling resistance	**3337.2 kN**
	Design BM y-y axis	**323 kNm**
	Moment resistance (y-y)	**710.2 kNm**
	Interaction factors	**0.62626 ≤ 1**
		0.8984 ≤ 1

Location: Tensile load and moment

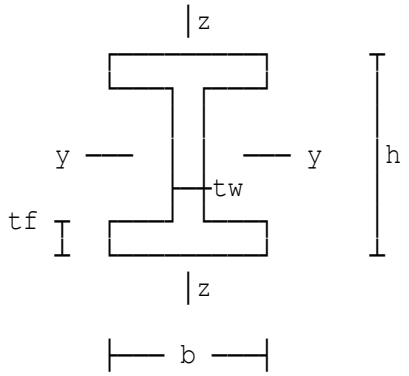

Open Section Beam

Calculations in accordance with BS EN 1993-1-1:2005. Internal forces and moments have been determined by elastic global analysis.

All forces and moments are factored.

Design moment about major axis	MyEd=124 kNm
Design shear force	VzEd=200 kN
Design axial load (+ve comp)	NEd=-480 kN
Length of member	L=7 m

406 x 178 x 67 UKB
Dimensions (mm): h=409.4 b=178.8 tw=8.8 tf=14.3 r=10.2
Properties (cm): Iy=24300 Iz=1370 Wply=1350 Wplz=237 It=46.1

Effective length parameter	K=1
Length for LTB	LT=7 m
Correction factor	kc=0.9

SECTION	**406 x 178 x 67 UKB Grade**	**S 275**
DESIGN	**Design tensile load**	**480 kN**
SUMMARY	**Axial resistance**	**2351.3 kN**
	Design BM y-y axis	**124 kNm**
	Moment resistance (y-y)	**371.25 kNm**
	Interaction factors	**0.8684 ≤ 1**

Location: Example 13, 'Steelwork Design Guide'

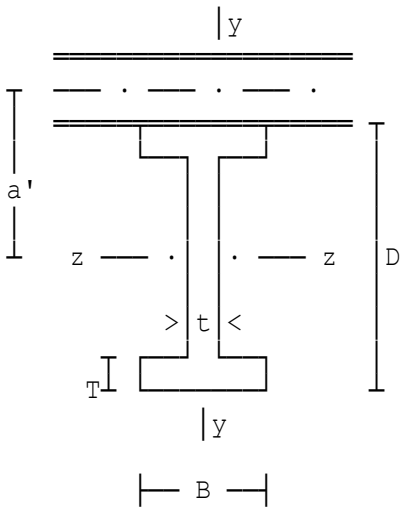

Rafter stability

Calculations in accordance with BS5950-1 : 2000 Clause 5.3 and Annex G - Members with one flange laterally restrained.

Loads and moments are factored.

A. UNIFORM SECTION OF RAFTER

Design moment about z-z axis	Mz=283.8 kNm
Design shear force	Fv=150 kN
Design axial load (+ve comp)	F=92.615 kN
Length of member	L=12.145 m

406 x 178 x 60 UB.

Young's Modulus	E=205 kN/mm²
Axial load at hinge position	F'=89.537 kN
Far end bending moment value	Mf=279.1 kNm
Lateral restraints	Ly=1500 mm
Torsional restraints	Lyt=4500 mm
Design moment	M1=279.1 kNm
Design axial load	F1=92.615 kN
Far end BM	betaM=247.83 kNm
Quarter point	m2=-162.85 kNm
Mid-span	m3=131.77 kNm
Three quarter point	m4=273.69 kNm
Maximum moment on segment	Mz'=573.68 kNm
Maximum moment on central half	M24=273.69 kNm

B. HOGGING MOMENT REGION

533 x 210 x 101 UB.
Vertical overall depth of section Do=810 mm

eaves to 1st. torsional restraint Lty1=1226.6 mm
Maximum applied moment BM1=573.68 kNm
Axial load Fc1=126.2 kN
Pitch of haunch Gamma=17.14°
Distance between ref. axes a'=245 mm
Larger end moment BM=573.68 kNm
Smaller end moment Ms=419.19 kNm
Resistance moment Mbi=Mb*(1-Fc/Pc)=943.16 kNm
Design moment Mxi=BM=573.68 kNm
The relationship is satisfied, thus the stability is ensured between effective torsional restraints for the section chosen.
1st to 2nd torsional restraint Lty2=1500 mm
Maximum applied moment BM2=419.19 kNm
Axial load Fc2=122.77 kN

Distance between ref. axes a'=245 mm
Larger end moment BM=419.19 kNm
Smaller end moment Ms=251 kNm
Resistance moment Mbi=Mb*(1-Fc/Pc)=653.96 kNm
Design moment Mxi=BM=419.19 kNm
The relationship is satisfied, thus the stability is ensured between effective torsional restraints for the section chosen.

HOGGING ZONE B

Check segment from sharp end of haunch to point of contraflexure

Dist. between lateral restraints Ly1=2776 mm

Start end restraint N1=251 kNm
Quarter point N2=181 kNm
Mid-length N3=116 kNm
Three quarter point N4=55 kNm
End restraint N5=0 kNm
Largest value of moment RS=251 kNm

Overall out-of-plane buckling resistance - Annex G Section G.2.1

$$\frac{F}{Pc} + \frac{mt.Mz}{Mb} \leq 1$$

Unity factor ufy=F/Pc+mt*ABS(MB)/Mb=0.86029

DESIGN SUMMARY

```
             1500                1500                1500
   |<------------------->|<------------------->|<------------------->|

   |  X                  X                   X                   X
   |  ||=================================================================
   |  || . -- . -- . -- . -- . -- . --  C.L. of member . --
   |  ||=================================================================
 810  ||                  ==========
   |  ||        ==========
   |  ||=======              Zone A <--|--> Zone B
   |  *
   |        1226.6 mm     Lateral restraint
   .  |<------------------->|
   |  |     1226.6 mm     Torsional restraint
   .  |<------------------->|
  leg                              X = lateral restraint
  C.L                              * = torsional restraint
```

UNIVERSAL BEAM	**406 x 178 x 60 UB Grade S 275**
HAUNCH SECTION	**533 x 210 x 101 UB Grade S 275**
	Section is satisfactory for bending, buckling resistance between intermediate restraints and overall buckling between torsional restraints.

Restraint spacing:
Rafter plastic hinge is assumed to form just below the portal apex at the point of maximum sagging moment. Provide restraint to both flanges at the plastic hinge location. If this is not practicable, restraint to both flanges should be provided within a distance of half the depth of the member along the flanges of the member from the location of the plastic hinge.

Adjacent to apex hinge	**Lateral restraint**	**1100 mm**
Along the rafter	**Lateral restraints**	**1500 mm**
	Torsional restraints	**4500 mm**
At eaves position	**Lateral restraint**	**1226.6 mm**
	Torsional restraint	**1226.6 mm**
	Torsional restraint	**2726.6 mm**

Location: Example - small span

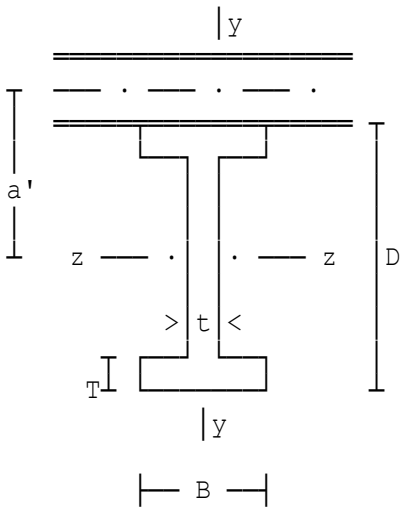

Rafter stability

Calculations in accordance with BS5950-1 : 2000 Clause 5.3 and Annex G - Members with one flange laterally restrained.

Loads and moments are factored.

A. UNIFORM SECTION OF RAFTER

Design moment about z-z axis	Mz=47 kNm
Design shear force	Fv=40 kN
Design axial load (+ve comp)	F=14.064 kN
Length of member	L=4.5 m

178 x 102 x 19 UB.

Young's Modulus	E=205 kN/mm²
Axial load at hinge position	F'=12.64 kN
Far end bending moment value	Mf=37.694 kNm
Lateral restraints	Ly=1100 mm
Torsional restraints	Lyt=2200 mm
Design moment	M1=37.694 kNm
Design axial load	F1=14.064 kN
Far end BM	betaM=17.835 kNm
Quarter point	m2=-5.4082 kNm
Mid-span	m3=26.149 kNm
Three quarter point	m4=43.957 kNm
Maximum moment on segment	Mz'=48.015 kNm
Maximum moment on central half	M24=43.957 kNm

B. HOGGING MOMENT REGION

178 x 102 x 19 UB.
Vertical overall depth of section Do=320 mm

eaves to 1st. torsional restraint	Lty1=2109.2 mm
Maximum applied moment	BM1=47.034 kNm
Axial load	Fc1=19.68 kN
Pitch of haunch	Gamma=17.14°
Distance between ref. axes	a'=110 mm
Start end restraint	R1=47.034 kNm
Quarter point	R2=27.031 kNm
Mid-length	R3=9.3794 kNm
Three quarter point	R4=-5.9191 kNm
End restraint	R5=-18.865 kNm
Largest value of moment	RS=47.034 kNm
Resistance moment	Mbi=Mb*(1-Fc/Pc)=85.455 kNm
Design moment	Mxi=BM=47.034 kNm

The relationship is satisfied, thus the stability is ensured between effective torsional restraints for the section chosen.

DESIGN SUMMARY

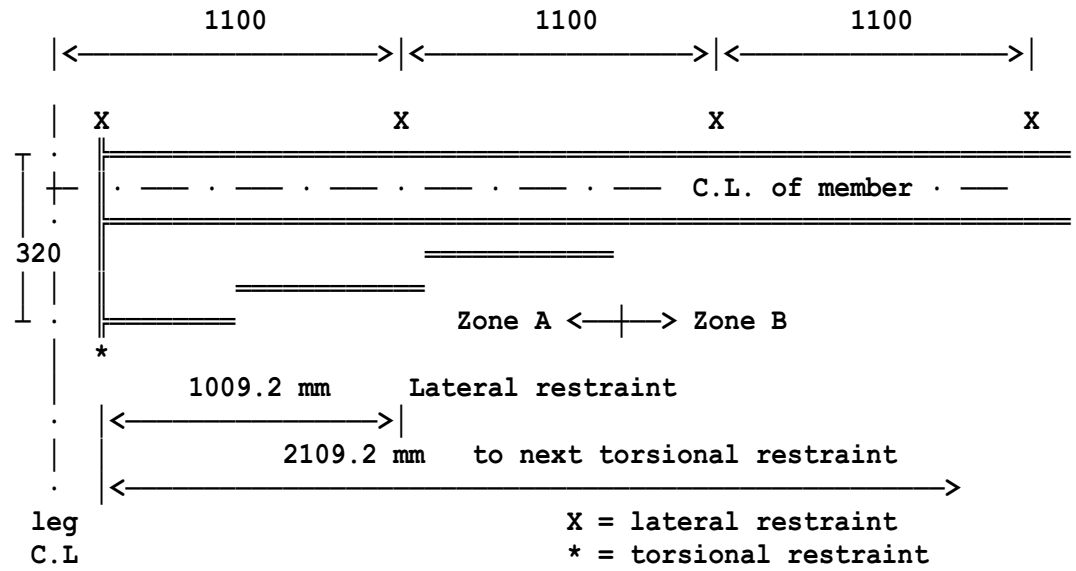

UNIVERSAL BEAM	**178 x 102 x 19 UB Grade S 275**
HAUNCH SECTION	**178 x 102 x 19 UB Grade S 275**

Section is satisfactory for bending, buckling resistance between intermediate restraints and overall buckling between torsional restraints.

Restraint spacing:
Rafter plastic hinge is assumed to form just below the portal apex at the point of maximum sagging moment. Provide restraint to both flanges at the plastic hinge location. If this is not practicable, restraint to both flanges should be provided within a distance of half the depth of the member along the flanges of the member from the location of the plastic hinge.

Adjacent to apex hinge	**Lateral restraint**	**825 mm**
Along the rafter	**Lateral restraints**	**1100 mm**
	Torsional restraints	**2200 mm**
At eaves position	**Lateral restraint**	**1009.2 mm**
	Torsional restraint	**2109.2 mm**

Location: Uniform section only based on Example 13

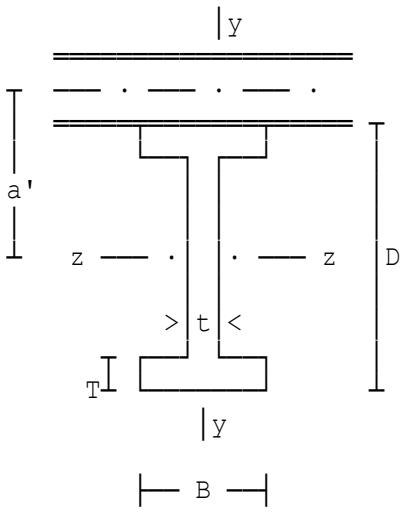

Rafter stability

Calculations in accordance with BS5950-1 : 2000 Clause 5.3 and Annex G - Members with one flange laterally restrained.

Loads and moments are factored.

A. UNIFORM SECTION OF RAFTER

Design moment about z-z axis	Mz=283.8 kNm
Design shear force	Fv=150 kN
Design axial load (+ve comp)	F=92 kN
Length of member	L=12.145 m
406 x 178 x 60 UB.	
Young's Modulus	E=205 kN/mm²
Lateral restraints	Ly=1500 mm
Torsional restraints	Lyt=4500 mm
Design moment	M1=279 kNm
Design axial load	F1=92 kN
Length of rafter	Lz=12145 mm
Far end BM	betaM=248 kNm
Quarter point	m2=176 kNm
Mid-span	m3=223 kNm
Three quarter point	m4=258 kNm
Maximum moment on segment	Mz'=279 kNm
Maximum moment on central half	M24=258 kNm

B. HOGGING MOMENT REGION

Axial force in rafter at eaves	Fc=126.2 kN
tension flange	Lp=1500 mm
restraints to both flanges	Lty=2776 mm
Distance between ref. axes	a'=245 mm
Start end restraint	R1=251 kNm
Quarter point	R2=181 kNm
Mid-length	R3=116 kNm
Three quarter point	R4=55 kNm
End restraint	R5=0 kNm

Largest value of moment RS=251 kNm

DESIGN SUMMARY

```
              1500                1500                1500
  |<------------------->|<------------------->|<------------------->|
              1500
  |   |<------------------->|
  .
  | X                   X                   X                   X
  . ||=================================================================
  | ||--- . --- . --- . --- . --- . --- . ---  C.L. of member
  . ||=================================================================
  | *
 leg
 C.L            2776 mm    to next torsional restraint
    |<-------------------------------------------------------->
                                  X = lateral restraint
                                  * = torsional restraint
```

UNIVERSAL BEAM **406 x 178 x 60 UB Grade S 275**
Section is satisfactory for bending, buckling resistance between intermediate restraints and overall buckling between torsional restraints.

Restraint spacing:
Rafter plastic hinge is assumed to form just below the portal apex at the point of maximum sagging moment. Provide restraint to both flanges at the plastic hinge location. If this is not practicable, restraint to both flanges should be provided within a distance of half the depth of the member along the flanges of the member from the location of the plastic hinge.

Along the rafter	**Lateral restraints**	**1500 mm**
	Torsional restraints	**4500 mm**
At eaves position	**Lateral restraint**	**1500 mm**
	Torsional restraint	**2776 mm**

Location: Ex1 - Based on example 13, 'Steelwork Design Guide'

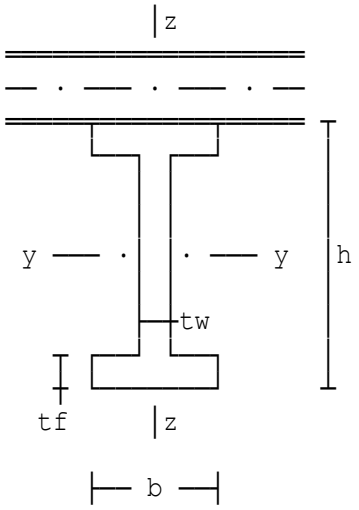

Rafter stability

Calculations in accordance with BS EN 1993-1-:2005 Clause 6.3.5 and Annex BB.3.

The proforma assumes a plastic hinge forms just below the portal apex (at the point of max sagging moment).

Loads and moments are factored.

A. UNIFORM SECTION OF RAFTER

Design moment about major axis	MyEd=283.8 kNm
Design shear force	VzEd=150 kN
Design axial load (+ve comp)	NEd=92.615 kN
Length of member	L=12.145 m
406 x 178 x 60 UKB	
Axial load at hinge position	NEd'=89.537 kN
Correction factor	kc=1
Dist.between lateral restraints	Lz=1500 mm
Dist.between torsional restraints	Lzt=4500 mm
Design span moment near the apex	MyEd1=279.1 kNm
Design axial load	NEd1=92.615 kN
Length of the whole rafter	Ly=15524 mm
Maximum moment on segment	M=279 kNm
Far end moment	psiM=247 kNm
Maximum end moment	Mh(1)=573 kNm
Maximum span moment	Ms(1)=-279 kNm
End moment	pMh(1)=-247 kNm

B. HOGGING MOMENT REGION

533 x 210 x 101 UKB
Vertical overall depth of section ho=810 mm
Pitch of rafter Theta=14.6 °
Pitch of haunch Gamma=17.14 °

```
          2045 mm    955 mm    975 mm   1500 mm
       |<----------->|<------->|<------->|<----------->|
       |     Lp      |   Lmh   |   Lm    |     Lz      |

   |  X           X        X        X           X
 T |  ||=========================================================
 | +- || . -- . -- . -- . |-- . -- . --  C.L. of member . --
 |   ||=========================================================
810  ||            ====== *B
 | |  ||      ======                        Assume a plastic hinge
 L |  ||======                |              at point B.  Zone B
   |  ||*              Ls<---+->Lk          terminates at point of
   |  ||                       |             contraflexure.
  leg ||     Hogging BM       Hogging BM    X = lateral restraint
  C.L ||------ Zone A -------+- Zone B -->   * = torsional restraint
```

C. ELASTIC STABILITY CHECKS - Zones A & B

Zone A - segment adjacent to column face

The haunched rafter segment adjacent to column face (2045 mm long) in hogging moment zone A will be checked.
Dist.between eff.torsional restr. Ltz3=2045 mm
Max design moment on segment BM1=MA=573 kNm
Min design moment on segment BM3=MAB=375.38 kNm
Design axial load NEd3=92 kN
Length for LTB LT=Lz/1000=2.045 m
Critical moment Mcr=C1*Et*Sr/10^6=2800.1 kNm
Design buckling resistance moment MbRd=ChiLT*Wply*fy/(gamM1*10^3)
=792 kNm
As MyEd' ≤ MbRd (573 kNm ≤ 792 kNm), design moment is within the buckling resistance moment. Hence OK.
Resistance moment Mbi=MbRd*(1-NEd'/NbRd)=736.35 kNm
Design moment Mxi=BM=573 kNm
As Mxi ≤ Mbi stability is ensured between effective torsional restraints for the section chosen.

Zone B - segment adjacent to sharp end of haunch

The uniform rafter segment adjacent to the sharp end of the haunch in hogging moment zone B (2776 mm long) will be checked.
Dist.between eff.torsional restr. Ltz4=2776 mm
Maximum design moment BM1=MB=283.8 kNm
Minimum design moment BM4=0 kNm
Design axial load NEd4=92 kN

Length for LTB LT=Lz/1000=2.776 m
Critical moment Mcr=C1*Et*Sr/10^6=1239.3 kNm
Design buckling resistance moment MbRd=ChiLT*Wply*fy/(gamM1*10^3)
=330 kNm
As MyEd' ≤ MbRd (283.8 kNm ≤ 330 kNm), design moment is
within the buckling resistance moment. Hence OK.
Resistance moment Mbi=MbRd*(1-NEd'/NbRd)=306.81 kNm
Design moment Mxi=BM=283.8 kNm
As Mxi ≤ Mbi stability is ensured between effective torsional restraints
for the section chosen.

DESIGN SUMMARY

UNIVERSAL BEAM	**406 x 178 x 60 UKB Grade S 275**
HAUNCH SECTION	**533 x 210 x 101 UKB Grade S 275**
	Section is satisfactory for bending, buckling resistance between intermediate restraints and overall buckling between torsional restraints.

Restraint spacing:
Rafter plastic hinge is assumed to form just below the portal apex at the point of maximum sagging moment and at the sharp end of the haunch. Provide restraint to both flanges at the plastic hinge locations. If this is not practicable, restraint to both flanges should be provided within a distance of half the depth of the member.

Adjacent to apex hinge	**First lateral restraint**	**975 mm**
Along the rafter	**Lateral restraints**	**1500 mm**
	Torsional restraints	**4500 mm**

Restraint spacing (measured from column face):

At eaves position	**Lateral restraint**	**2045 mm**
	Torsional restraint	**2045 mm**
	Torsional restraint	**3000 mm**

For spacing of lateral restraints adjacent to the sharp end of haunch see diagram in "Haunch stability" section.

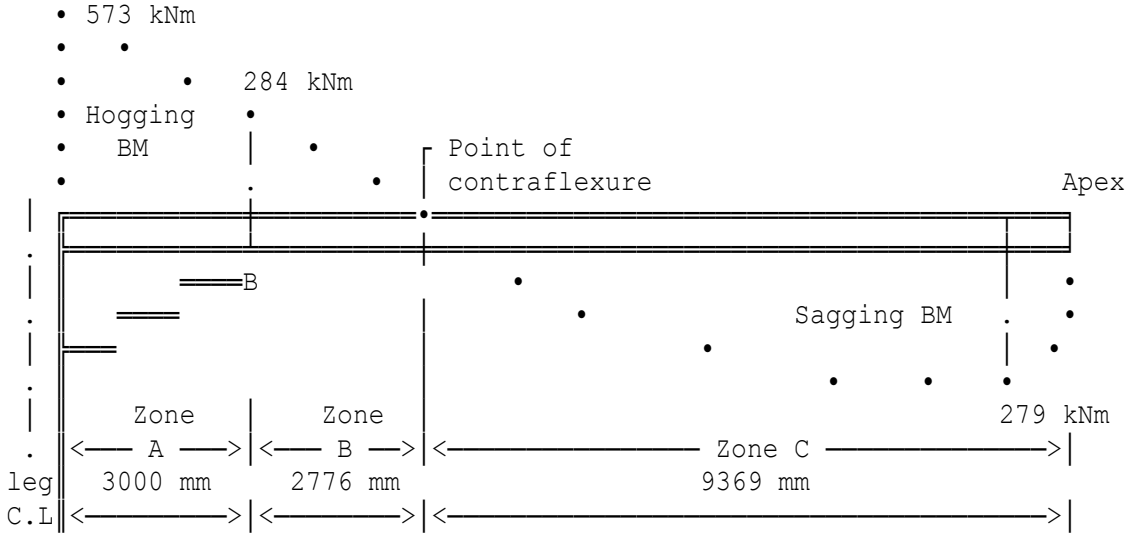
573 kNm
284 kNm
Hogging
BM
Point of
contraflexure
Apex
B
Sagging BM
279 kNm
Zone
A
Zone
B
Zone C
leg
C.L
3000 mm
2776 mm
9369 mm

Location: Ex2 - Small span rafter

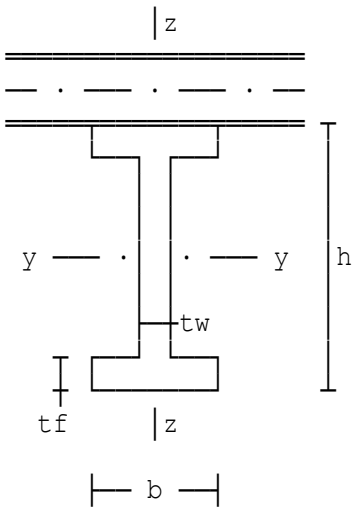

Rafter stability

Calculations in accordance with BS EN 1993-1-:2005 Clause 6.3.5 and Annex BB.3.

The proforma assumes a plastic hinge forms just below the portal apex (at the point of max sagging moment).

Loads and moments are factored.

A. UNIFORM SECTION OF RAFTER

Design moment about major axis	MyEd=45 kNm
Design shear force	VzEd=40 kN
Design axial load (+ve comp)	NEd=14 kN
Length of member	L=4.5 m
203 x 102 x 23 UKB	
Axial load at hinge position	NEd'=14 kN
Correction factor	kc=1
Dist.between lateral restraints	Lz=1100 mm
Dist.between torsional restraints	Lzt=2200 mm
Design span moment near the apex	MyEd1=38 kNm
Design axial load	NEd1=15 kN
Length of the whole rafter	Ly=5100 mm
Correction factor	kc=1
Maximum end moment	Mh(1)=48 kNm
Maximum span moment	Ms(1)=-38 kNm
End moment	pMh(1)=-35 kNm

B. HOGGING MOMENT REGION

203 x 102 x 23 UKB	
Vertical overall depth of section	ho=375 mm
Pitch of rafter	Theta=11.3 °
Pitch of haunch	Gamma=17.14 °

```
          10 mm      560 mm    650 mm   1100 mm
        |<---------->|<------->|<------->|<---------->|
        |    Lp      |  Lmh    |   Lm    |     Lz     |

    |  X           X        X        X           X
 ┬  .  ╟═══════════════════════════════════════════════════════
 |  ┼  ╟· ── · ── · ── · |── · ── · ──  C.L. of member · ──
 |  .  ╟═══════════════════════════════════════════════════════
375     ╟            ═══════ *B
 |  |   ╟      ═══════                      Assume a plastic hinge
 ┴  .   ╟═══════                 |          at point B.  Zone B
    |   ╟*              Ls<──┼──>Lk        terminates at point of
    .   ╟                 |                 contraflexure.
  leg   ╟     Hogging BM       Hogging BM   X = lateral restraint
  C.L   ╟──────── Zone A ────────┼─ Zone B ──>  * = torsional restraint
```

C. ELASTIC STABILITY CHECKS - Zones A & B

Zone A - segment adjacent to column face

The haunched rafter segment adjacent to column face (10 mm long) in hogging moment zone A will be checked.

Dist.between eff.torsional restr. Ltz3=10 mm
Max design moment on segment BM1=MA=48 kNm
Min design moment on segment BM3=MAB=47.947 kNm
Design axial load NEd3=14 kN
Length for LTB LT=Lz/1000=0.01 m
Critical moment Mcr=C1*Et*Sr/10^6=5.9676E6 kNm
Design buckling resistance moment MbRd=ChiLT*Wply*fy/(gamM1*10^3)
=136.95 kNm

As MyEd' ≤ MbRd (48 kNm ≤ 136.95 kNm), design moment is within the buckling resistance moment. Hence OK.

Resistance moment Mbi=MbRd*(1-NEd'/NbRd)=134.55 kNm
Design moment Mxi=BM=48 kNm

As Mxi ≤ Mbi stability is ensured between effective torsional restraints for the section chosen.

Zone B - segment adjacent to sharp end of haunch

The uniform rafter segment adjacent to the sharp end of the haunch in hogging moment zone B (1800 mm long) will be checked.

Dist.between eff.torsional restr. Ltz4=1800 mm
Maximum design moment BM1=MB=45 kNm
Minimum design moment BM4=0 kNm
Design axial load NEd4=14 kN
Length for LTB LT=Lz/1000=1.8 m
Critical moment Mcr=C1*Et*Sr/10^6=225.93 kNm
Design buckling resistance moment MbRd=ChiLT*Wply*fy/(gamM1*10^3)
=64.35 kNm

As MyEd' ≤ MbRd (45 kNm ≤ 64.35 kNm), design moment is within the buckling resistance moment. Hence OK.

Resistance moment Mbi=MbRd*(1-NEd'/NbRd)=63.22 kNm
Design moment Mxi=BM=45 kNm
As Mxi ≤ Mbi stability is ensured between effective torsional restraints for the section chosen.

DESIGN SUMMARY

UNIVERSAL BEAM	**203 x 102 x 23 UKB Grade S 275**
HAUNCH SECTION	**203 x 102 x 23 UKB Grade S 275**
	Section is satisfactory for bending, buckling resistance between intermediate restraints and overall buckling between torsional restraints.

Restraint spacing:
Rafter plastic hinge is assumed to form just below the portal apex at the point of maximum sagging moment and at the sharp end of the haunch. Provide restraint to both flanges at the plastic hinge locations. If this is not practicable, restraint to both flanges should be provided within a distance of half the depth of the member.

Adjacent to apex hinge	**First lateral restraint**	**650 mm**
Along the rafter	**Lateral restraints**	**1100 mm**
	Torsional restraints	**2200 mm**

Restraint spacing (measured from column face):

At eaves position	**Lateral restraint**	**10 mm**
	Torsional restraint	**570 mm**

For spacing of lateral restraints adjacent to the sharp end of haunch see diagram in "Haunch stability" section.

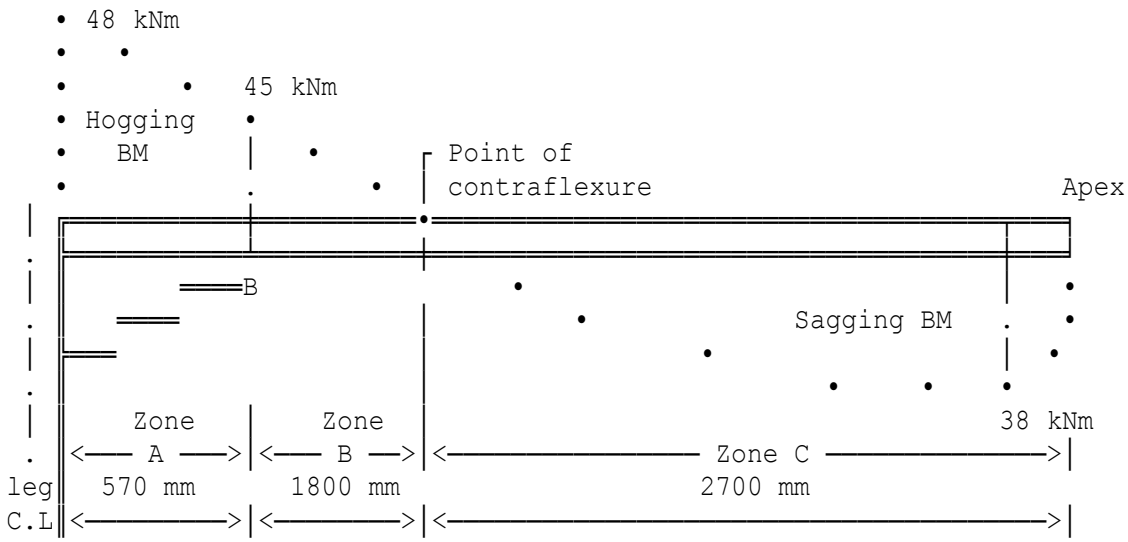

Location: Ex3 - Uniform section only based on Example 13

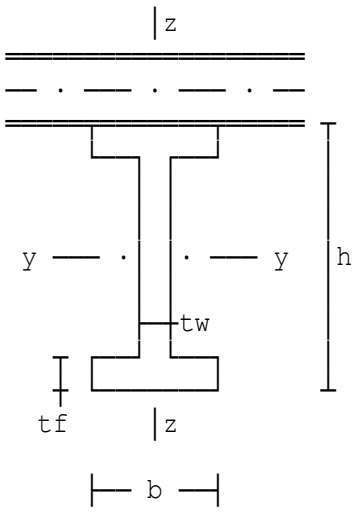

Rafter stability

Calculations in accordance with BS EN 1993-1-:2005 Clause 6.3.5 and Annex BB.3.

The proforma assumes a plastic hinge forms just below the portal apex (at the point of max sagging moment).

Loads and moments are factored.

A. UNIFORM SECTION OF RAFTER

Design moment about major axis	MyEd=283.8 kNm
Design shear force	VzEd=150 kN
Design axial load (+ve comp)	NEd=92 kN
Length of member	L=12.145 m
406 x 178 x 60 UKB	
Axial load at hinge position	NEd'=92 kN
Correction factor	kc=1
Dist.between lateral restraints	Lz=1500 mm
Dist.between torsional restraints	Lzt=4500 mm
Design span moment near the apex	MyEd1=279 kNm
Design axial load	NEd1=92 kN
Length of the whole rafter	Ly=12145 mm
Correction factor	kc=1
Maximum end moment	Mh(1)=284 kNm
Maximum span moment	Ms(1)=-279 kNm
End moment	pMh(1)=-247 kNm

B. HOGGING MOMENT REGION

eaves to 1st. torsional restraint	Ltz1=1226 mm
Maximum design moment	BM1=284 kNm
Axial load	NEd1=92 kN
Correction factor	kc=1
Resistance moment	Mbi=MbRd*(1-NEd'/NbRd)=315.57 kNm
Design moment	Mxi=BM=284 kNm

As Mxi ≤ Mbi stability is ensured between effective torsional restraints for the section chosen.

1st to 2nd torsional restraint	Ltz2=1500 mm
Max moment @ 1st tors.restraint	BM2=251 kNm
Axial load @ 1st tors.restraint	NEd2=90 kN
Correction factor	kc=1
Resistance moment	Mbi=MbRd*(1-NEd'/NbRd)=315.88 kNm
Design moment	Mxi=BM=251 kNm

As Mxi ≤ Mbi stability is ensured between effective torsional restraints for the section chosen.

DESIGN SUMMARY

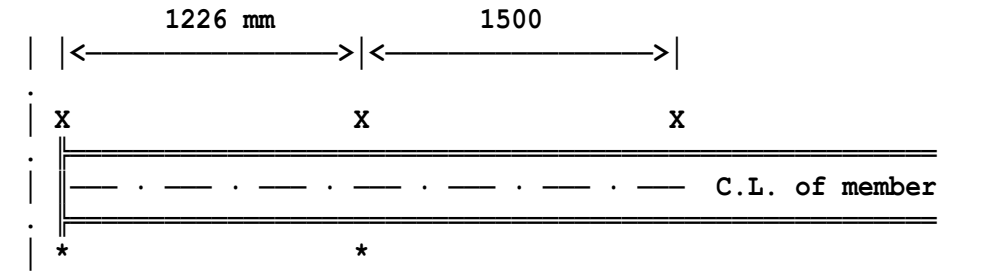

leg C.L **1226 mm** **Torsional restraint**

X = lateral restraint
*** = torsional restraint**

UNIVERSAL BEAM **406 x 178 x 60 UKB Grade S 275**
Section is satisfactory for bending, buckling resistance between intermediate restraints and overall buckling between torsional restraints.

Restraint spacing:
Rafter plastic hinge is assumed to form just below the portal apex at the point of maximum sagging moment. Provide restraint to both flanges at the plastic hinge location.

Adjacent to apex hinge	**First lateral restraint**	**975 mm**
Along the rafter	**Lateral restraints**	**1500 mm**
	Torsional restraints	**4500 mm**

Restraint spacing (measured from column face):

At eaves position	**Lateral restraint**	**1226 mm**
	Torsional restraint	**1226 mm**
	Torsional restraint	**2726 mm**

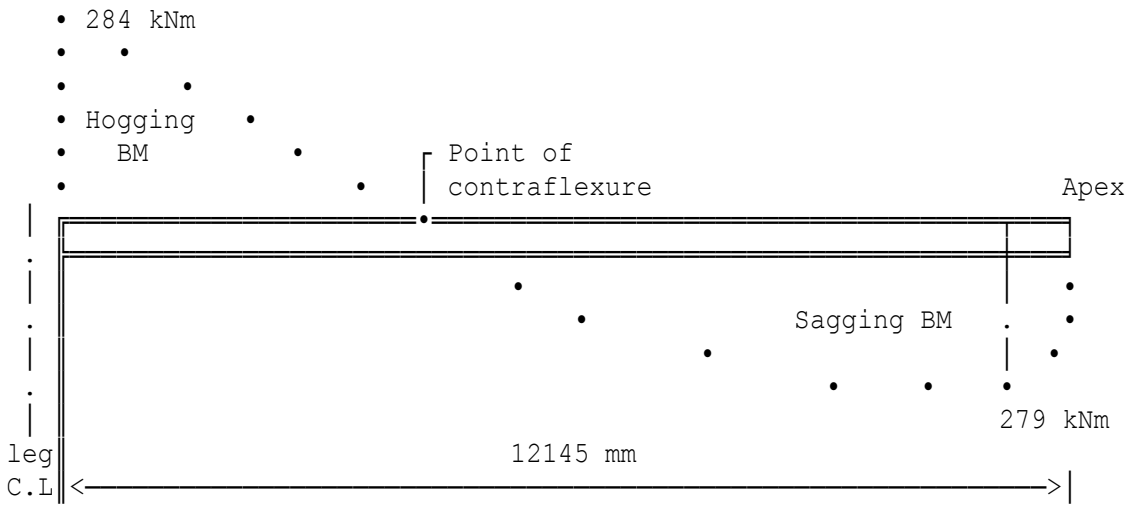
284 kNm
Hogging
BM
Point of
contraflexure
Apex
Sagging BM
279 kNm
leg
C.L
12145 mm

Location: Ex4 - Based on SCI P399 with hinge at sharp end of haunch

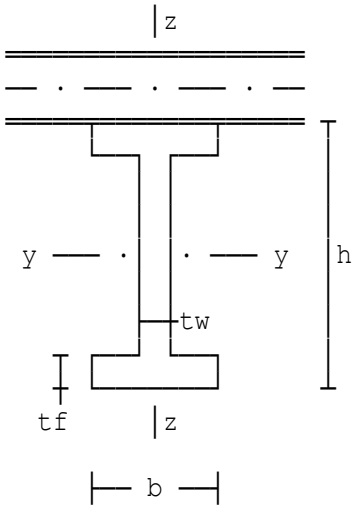

Rafter stability

Calculations in accordance with BS EN 1993-1-:2005 Clause 6.3.5 and Annex BB.3.

The proforma assumes a plastic hinge forms just below the portal apex (at the point of max sagging moment).

Loads and moments are factored.

A. UNIFORM SECTION OF RAFTER

Design moment about major axis	MyEd=915 kNm
Design shear force	VzEd=100 kN
Design axial load (+ve comp)	NEd=164 kN
Length of member	L=16 m
610 x 229 x 101 UKB	
Axial load at hinge position	NEd'=164 kN
Correction factor	kc=1
Dist.between lateral restraints	Lz=1800 mm
Dist.between torsional restraints	Lzt=5400 mm
Design span moment near the apex	MyEd1=915 kNm
Design axial load	NEd1=164 kN
Length of the whole rafter	Ly=20000 mm
Maximum moment on segment	M=915 kNm
Far end moment	psiM=904 kNm
Maximum end moment	Mh(1)=1711 kNm
Maximum span moment	Ms(1)=-915 kNm
End moment	pMh(1)=-904 kNm

B. HOGGING MOMENT REGION

610 x 229 x 101 UKB
Vertical overall depth of section ho=1167 mm
Pitch of rafter Theta=8 °
Pitch of haunch Gamma=17.14 °

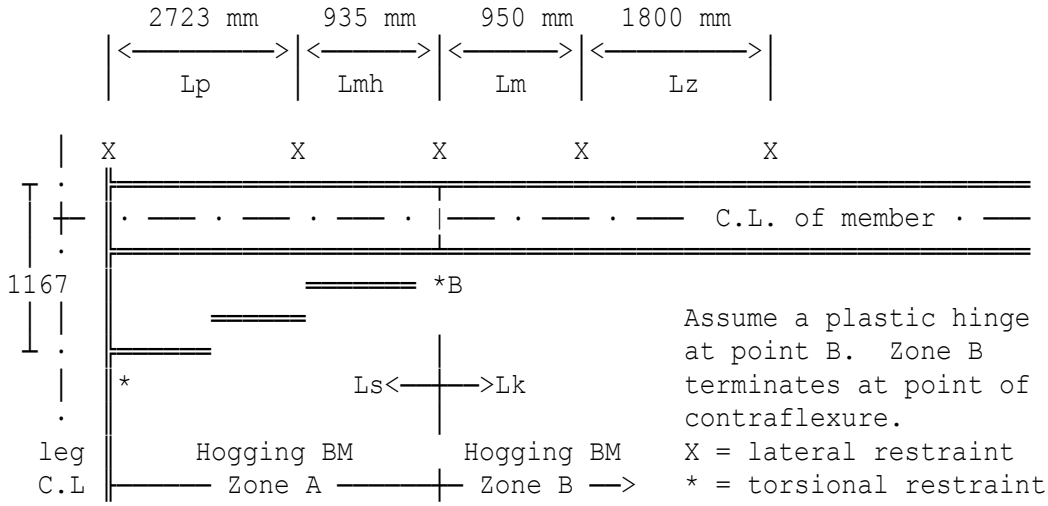

C. ELASTIC STABILITY CHECKS - Zones A & B

Zone A - segment adjacent to column face

The haunched rafter segment adjacent to column face (2723 mm long) in hogging moment zone A will be checked.
Dist.between eff.torsional restr. Ltz3=2723 mm
Max design moment on segment BM1=MA=1711 kNm
Min design moment on segment BM3=MAB=1016.9 kNm
Design axial load NEd3=164 kN
Length for LTB LT=Lz/1000=2.723 m
Critical moment Mcr=C1*Et*Sr/10^6=5751.9 kNm
Design buckling resistance moment MbRd=ChiLT*Wply*fy/(gamM1*10^3)
=2488.6 kNm
As MyEd' ≤ MbRd (1711 kNm ≤ 2488.6 kNm), design moment is within the buckling resistance moment. Hence OK.
Resistance moment Mbi=MbRd*(1-NEd'/NbRd)=2342.4 kNm
Design moment Mxi=BM=1711 kNm
As Mxi ≤ Mbi stability is ensured between effective torsional restraints for the section chosen.

Zone B - segment adjacent to sharp end of haunch

The uniform rafter segment adjacent to the sharp end of the haunch in hogging moment zone B (4000 mm long) will be checked.
Dist.between eff.torsional restr. Ltz4=3305 mm
Maximum design moment BM1=MB=781 kNm
Minimum design moment BM4=135.7 kNm
Design axial load NEd4=164 kN

Length for LTB LT=Lz/1000=3.305 m
Critical moment Mcr=C1*Et*Sr/10^6=2763.1 kNm
Design buckling resistance moment MbRd=ChiLT*Wply*fy/(gamM1*10^3)
=999.96 kNm
As MyEd' ≤ MbRd (781 kNm ≤ 999.96 kNm), design moment is
within the buckling resistance moment. Hence OK.
Resistance moment Mbi=MbRd*(1-NEd'/NbRd)=941.25 kNm
Design moment Mxi=BM=781 kNm
As Mxi ≤ Mbi stability is ensured between effective torsional restraints
for the section chosen.

DESIGN SUMMARY

UNIVERSAL BEAM **610 x 229 x 101 UKB Grade S 355**
HAUNCH SECTION **610 x 229 x 101 UKB Grade S 355**
Section is satisfactory for bending, buckling resistance between intermediate restraints and overall buckling between torsional restraints.

Restraint spacing:
Rafter plastic hinge is assumed to form just below the portal apex at the point of maximum sagging moment and at the sharp end of the haunch. Provide restraint to both flanges at the plastic hinge locations. If this is not practicable, restraint to both flanges should be provided within a distance of half the depth of the member.

Adjacent to apex hinge	**First lateral restraint**	**950 mm**
Along the rafter	**Lateral restraints**	**1800 mm**
	Torsional restraints	**5400 mm**

Restraint spacing (measured from column face):

At eaves position	**Lateral restraint**	**2723 mm**
	Torsional restraint	**2723 mm**
	Torsional restraint	**3658 mm**

Provide an additional bottom flange torsional restraint at a distance ≤ 3305 mm from the sharp end of the haunch in the uniform section and before the the point of contraflexure.

For spacing of lateral restraints adjacent to the sharp end of haunch see diagram in "Haunch stability" section.

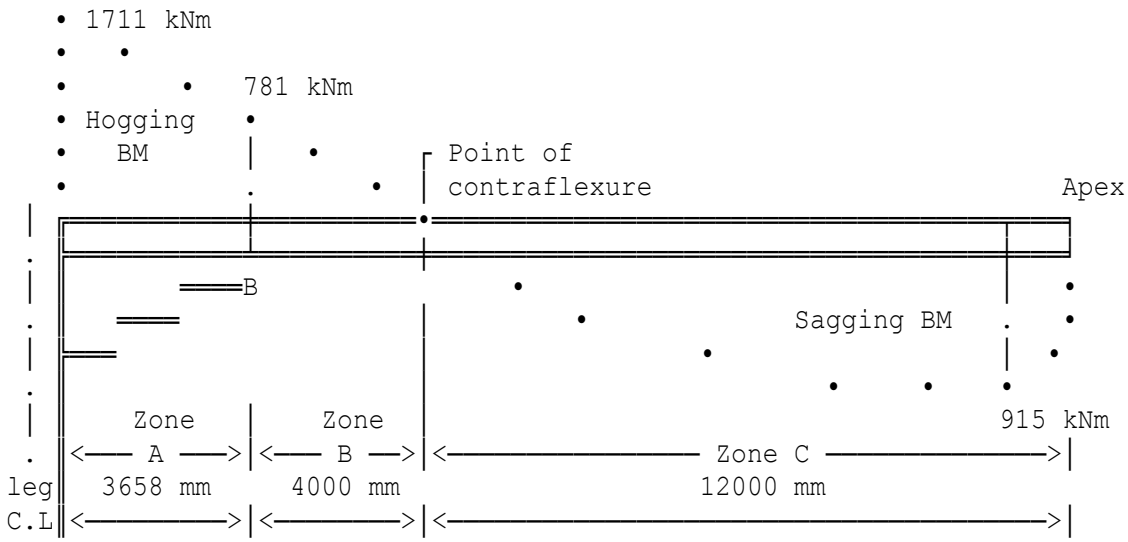
1711 kNm
781 kNm
Hogging
BM
Point of
contraflexure
Apex
B
Sagging BM
915 kNm
Zone
A
Zone
B
Zone C
leg
C.L
3658 mm
4000 mm
12000 mm

Location: Ex5 - As Ex4 but without a hinge at sharp end of haunch

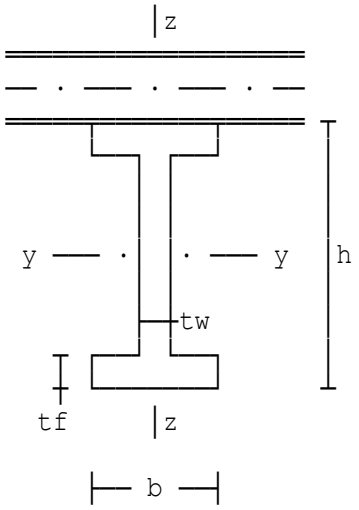

Rafter stability

Calculations in accordance with BS EN 1993-1-:2005 Clause 6.3.5 and Annex BB.3.

The proforma assumes a plastic hinge forms just below the portal apex (at the point of max sagging moment).

Loads and moments are factored.

A. UNIFORM SECTION OF RAFTER

Design moment about major axis	MyEd=915 kNm
Design shear force	VzEd=100 kN
Design axial load (+ve comp)	NEd=164 kN
Length of member	L=16 m
610 x 229 x 101 UKB	
Axial load at hinge position	NEd'=164 kN
Correction factor	kc=1
Dist.between lateral restraints	Lz=1800 mm
Dist.between torsional restraints	Lzt=5400 mm
Design span moment near the apex	MyEd1=915 kNm
Design axial load	NEd1=164 kN
Length of the whole rafter	Ly=20000 mm
Maximum moment on segment	M=915 kNm
Far end moment	psiM=904 kNm
Maximum end moment	Mh(1)=1711 kNm
Maximum span moment	Ms(1)=-915 kNm
End moment	pMh(1)=-904 kNm

B. HOGGING MOMENT REGION

610 x 229 x 101 UKB
Vertical overall depth of section ho=1167 mm
Pitch of rafter Theta=8 °
Pitch of haunch Gamma=17.14 °

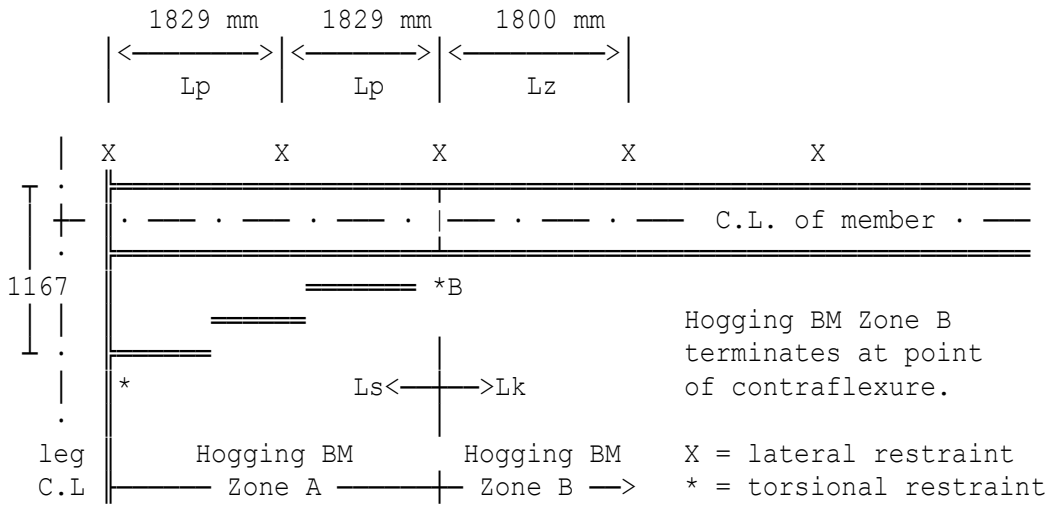

C. ELASTIC STABILITY CHECKS - Zones A & B

Zone A - segment adjacent to column face

The haunched rafter segment adjacent to column face (1829 mm long)
in hogging moment zone A will be checked.
Dist.between eff.torsional restr. Ltz3=1829 mm
Max design moment on segment BM1=MA=1711 kNm
Min design moment on segment BM3=MAB=1246 kNm
Design axial load NEd3=164 kN
Length for LTB LT=Lz/1000=1.829 m
Critical moment Mcr=C1*Et*Sr/10^6=11723 kNm
Design buckling resistance moment MbRd=ChiLT*Wply*fy/(gamM1*10^3)
=2488.6 kNm
As MyEd' ≤ MbRd (1711 kNm ≤ 2488.6 kNm), design moment is
within the buckling resistance moment. Hence OK.
Resistance moment Mbi=MbRd*(1-NEd'/NbRd)=2342.4 kNm
Design moment Mxi=BM=1711 kNm
As Mxi ≤ Mbi stability is ensured between effective torsional restraints
for the section chosen.

Zone B - segment adjacent to sharp end of haunch

The uniform rafter segment adjacent to the sharp end of the haunch in
hogging moment zone B (4000 mm long) will be checked.
Dist.between eff.torsional restr. Ltz4=3305 mm
Maximum design moment BM1=MB=781 kNm
Minimum design moment BM4=135.7 kNm
Design axial load NEd4=164 kN

Length for LTB LT=Lz/1000=3.305 m
Critical moment Mcr=C1*Et*Sr/10^6=2763.1 kNm
Design buckling resistance moment MbRd=ChiLT*Wply*fy/(gamM1*10^3)
=999.96 kNm
As MyEd' ≤ MbRd (781 kNm ≤ 999.96 kNm), design moment is
within the buckling resistance moment. Hence OK.
Resistance moment Mbi=MbRd*(1-NEd'/NbRd)=941.25 kNm
Design moment Mxi=BM=781 kNm
As Mxi ≤ Mbi stability is ensured between effective torsional restraints
for the section chosen.

DESIGN SUMMARY

UNIVERSAL BEAM **610 x 229 x 101 UKB Grade S 355**
HAUNCH SECTION **610 x 229 x 101 UKB Grade S 355**
Section is satisfactory for bending, buckling resistance between intermediate restraints and overall buckling between torsional restraints.

Restraint spacing:
Rafter plastic hinge is assumed to form just below the portal apex at the point of maximum sagging moment. Provide restraint to both flanges at the plastic hinge location. If this is not practicable, restraint to both flanges should be provided within a distance of half the depth of the member.

Adjacent to apex hinge	**First lateral restraint**	**950 mm**
Along the rafter	**Lateral restraints**	**1800 mm**
	Torsional restraints	**5400 mm**

Restraint spacing (measured from column face):

At eaves position	**Lateral restraint**	**1829 mm**
	Torsional restraint	**1829 mm**
	Torsional restraint	**3658 mm**

Provide an additional bottom flange torsional restraint at a distance ≤ 3305 mm from the sharp end of the haunch on the higher side beyond point B.

```
   • 1711 kNm
   •   •
   •       •   781 kNm
   • Hogging   •
   •   BM      |   •       ┌ Point of
   •           .       •   | contraflexure                          Apex
 | ╔═══════════|═══════════•═══════════════════════════════════════╗
 . ╠═══════════|═══════════|═══════════════════════════════════════╣
 | ╠═══       ═══B                 •                               |   •
 . ╠═══ ═══                        |         •             Sagging BM   .   •
 | ╠═══                            |                 •                |  •
 .                                 |                             •     •    •
 |     Zone    |     Zone         |                                   915 kNm
 . |<─── A ───>|<─── B ─>|<──────────────── Zone C ──────────────>|
leg|  3658 mm     4000 mm                   12000 mm
C.L|<──────────>|<─────────>|<──────────────────────────────────>|
```

Location: Ex6 - Uses UC section for rafter and haunch

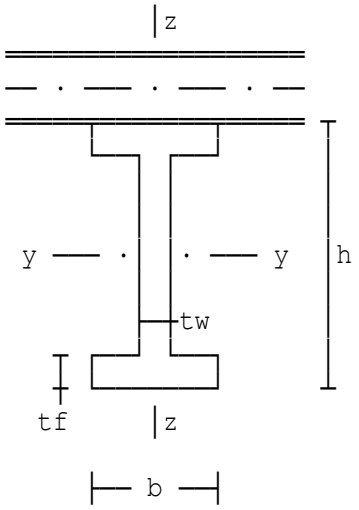

Rafter stability

Calculations in accordance with BS EN 1993-1-:2005 Clause 6.3.5 and Annex BB.3.

The proforma assumes a plastic hinge forms just below the portal apex (at the point of max sagging moment).

Loads and moments are factored.

A. UNIFORM SECTION OF RAFTER

Design moment about major axis	MyEd=600 kNm
Design shear force	VzEd=200 kN
Design axial load (+ve comp)	NEd=400 kN
Length of member	L=6 m
356 x 368 x 129 UKC	
Axial load at hinge position	NEd'=400 kN
Correction factor	kc=1
Dist.between lateral restraints	Lz=1500 mm
Dist.between torsional restraints	Lzt=4500 mm
Design span moment near the apex	MyEd1=400 kNm
Design axial load	NEd1=200 kN
Length of the whole rafter	Ly=9000 mm
Maximum moment on segment	M=400 kNm
Far end moment	psiM=390 kNm
Maximum end moment	Mh(1)=600 kNm
Maximum span moment	Ms(1)=-400 kNm
End moment	pMh(1)=-380 kNm

B. HOGGING MOMENT REGION

356 x 368 x 129 UKC
Vertical overall depth of section ho=650 mm
Pitch of rafter Theta=14 °
Pitch of haunch Gamma=17 °

```
          610 mm     2390 mm   1000 mm  1500 mm
       |<----------->|<------->|<------->|<----------->|
       |     Lp      |  Lmh    |   Lm    |     Lz      |

   |  X           X        X        X           X
 T |  ||=========================================================
 | +- || . -- . -- . -- . |-- . -- . --  C.L. of member . --
 |   ||=========================================================
650  ||            ====== *B
 | |  ||      ======                        Assume a plastic hinge
 L |  ||======                |              at point B.  Zone B
   |  ||*              Ls<---+->Lk          terminates at point of
   .  ||                      |              contraflexure.
  leg ||     Hogging BM       Hogging BM    X = lateral restraint
  C.L ||------ Zone A -------+- Zone B -->   * = torsional restraint
```

C. ELASTIC STABILITY CHECKS - Zones A & B

Zone A - segment adjacent to column face

The haunched rafter segment adjacent to column face (610 mm long)
in hogging moment zone A will be checked.
Dist.between eff.torsional restr. Ltz3=610 mm
Max design moment on segment BM1=MA=600 kNm
Min design moment on segment BM3=MAB=559.33 kNm
Design axial load NEd3=92 kN
Length for LTB LT=Lz/1000=0.61 m
Critical moment Mcr=C1*Et*Sr/10^6=255535 kNm
Design buckling resistance moment MbRd=ChiLT*Wply*fy/(gamM1*10^3)
=1287.9 kNm
As MyEd' ≤ MbRd (600 kNm ≤ 1287.9 kNm), design moment is
within the buckling resistance moment. Hence OK.
Resistance moment Mbi=MbRd*(1-NEd'/NbRd)=1260.6 kNm
Design moment Mxi=BM=600 kNm
As Mxi ≤ Mbi stability is ensured between effective torsional restraints
for the section chosen.

Zone B - segment adjacent to sharp end of haunch

The uniform rafter segment adjacent to the sharp end of the haunch in
hogging moment zone B (2776 mm long) will be checked.
Dist.between eff.torsional restr. Ltz4=2776 mm
Maximum design moment BM1=MB=400 kNm
Minimum design moment BM4=0 kNm
Design axial load NEd4=92 kN

Length for LTB LT=Lz/1000=2.776 m
Critical moment Mcr=C1*Et*Sr/10^6=12380 kNm
Design buckling resistance moment MbRd=ChiLT*Wply*fy/(gamM1*10^3)
=657.2 kNm
As MyEd' ≤ MbRd (400 kNm ≤ 657.2 kNm), design moment is
within the buckling resistance moment. Hence OK.
Resistance moment Mbi=MbRd*(1-NEd'/NbRd)=643.29 kNm
Design moment Mxi=BM=400 kNm
As Mxi ≤ Mbi stability is ensured between effective torsional restraints
for the section chosen.

DESIGN SUMMARY

UNIVERSAL COLUMN 356 x 368 x 129 UKC Grade S 275
HAUNCH SECTION 356 x 368 x 129 UKB Grade S 275
Section is satisfactory for bending, buckling resistance between intermediate restraints and overall buckling between torsional restraints.

Restraint spacing:
Rafter plastic hinge is assumed to form just below the portal apex at the point of maximum sagging moment and at the sharp end of the haunch. Provide restraint to both flanges at the plastic hinge locations. If this is not practicable, restraint to both flanges should be provided within a distance of half the depth of the member.

Adjacent to apex hinge	**First lateral restraint**	**1000 mm**
Along the rafter	**Lateral restraints**	**1500 mm**
	Torsional restraints	**4500 mm**

Restraint spacing (measured from column face):

At eaves position	**Lateral restraint**	**610 mm**
	Torsional restraint	**3000 mm**

For spacing of lateral restraints adjacent to the sharp end of haunch see diagram in "Haunch stability" section.

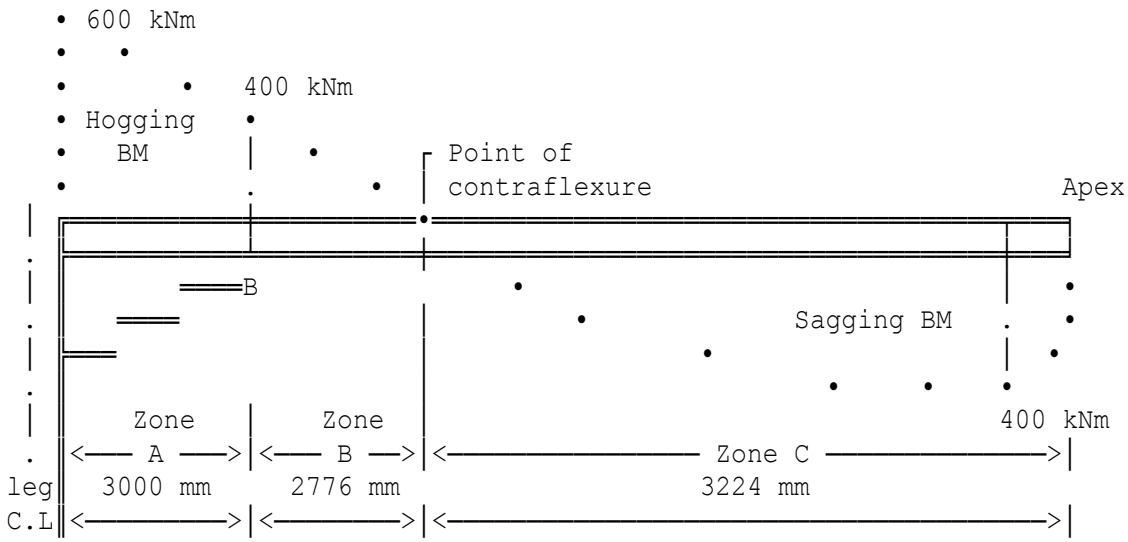
600 kNm
400 kNm
Hogging
BM
Point of
contraflexure
Apex
B
Sagging BM
Zone
A
Zone
B
Zone C
400 kNm
leg
C.L
3000 mm
2776 mm
3224 mm

Location: Ex7 - Uses UC section for rafter and haunch

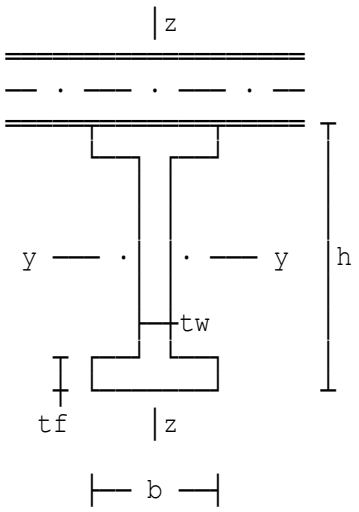

Rafter stability

Calculations in accordance with BS EN 1993-1-:2005 Clause 6.3.5 and Annex BB.3.

The proforma assumes a plastic hinge forms just below the portal apex (at the point of max sagging moment).

Loads and moments are factored.

A. UNIFORM SECTION OF RAFTER

Design moment about major axis	MyEd=600 kNm
Design shear force	VzEd=200 kN
Design axial load (+ve comp)	NEd=200 kN
Length of member	L=6 m
356 x 368 x 129 UKC	
Dist.between lateral restraints	Lz=1500 mm
Dist.between torsional restraints	Lzt=4500 mm
Design span moment near the apex	MyEd1=400 kNm
Design axial load	NEd1=200 kN
Length of the whole rafter	Ly=9000 mm
Maximum moment on segment	M=600 kNm
Far end moment	psiM=390 kNm
Maximum end moment	Mh(1)=600 kNm
Maximum span moment	Ms(1)=-400 kNm
End moment	pMh(1)=-380 kNm

B. HOGGING MOMENT REGION

eaves to 1st. torsional restraint	Ltz1=4500 mm
Maximum design moment	BM1=600 kNm
Axial load	NEd1=200 kN
Maximum moment on member	M=600 kNm
Far end moment	psiM=390 kNm
Resistance moment	Mbi=MbRd*(1-NEd'/NbRd)=626.96 kNm
Design moment	Mxi=BM=600 kNm

As Mxi ≤ Mbi stability is ensured between effective torsional restraints for the section chosen.

DESIGN SUMMARY

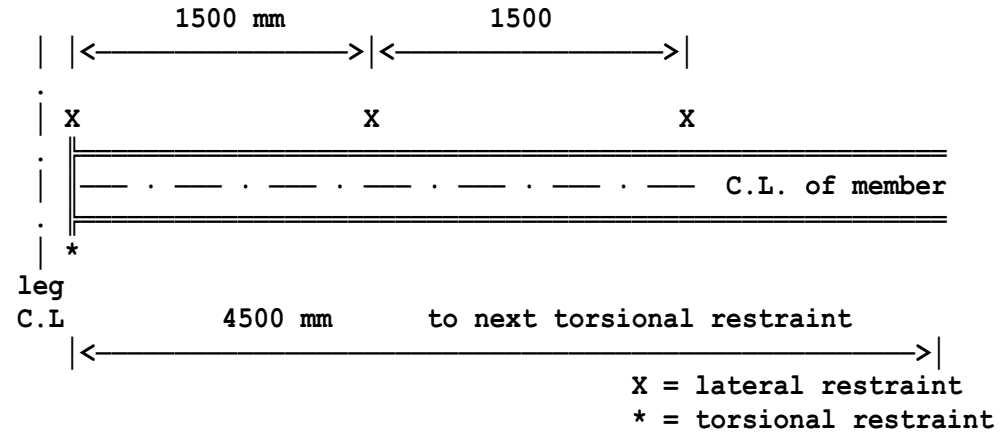

UNIVERSAL COLUMN **356 x 368 x 129 UKC Grade S 275**
Section is satisfactory for bending, buckling resistance between intermediate restraints and overall buckling between torsional restraints.

Restraint spacing:
Rafter plastic hinge is assumed to form just below the portal apex at the point of maximum sagging moment. Provide restraint to both flanges at the plastic hinge location.

Along the rafter	**Lateral restraints**	**1500 mm**
	Torsional restraints	**4500 mm**

Restraint spacing (measured from column face):

At eaves position	**Lateral restraint**	**1500 mm**
	Torsional restraint	**4500 mm**

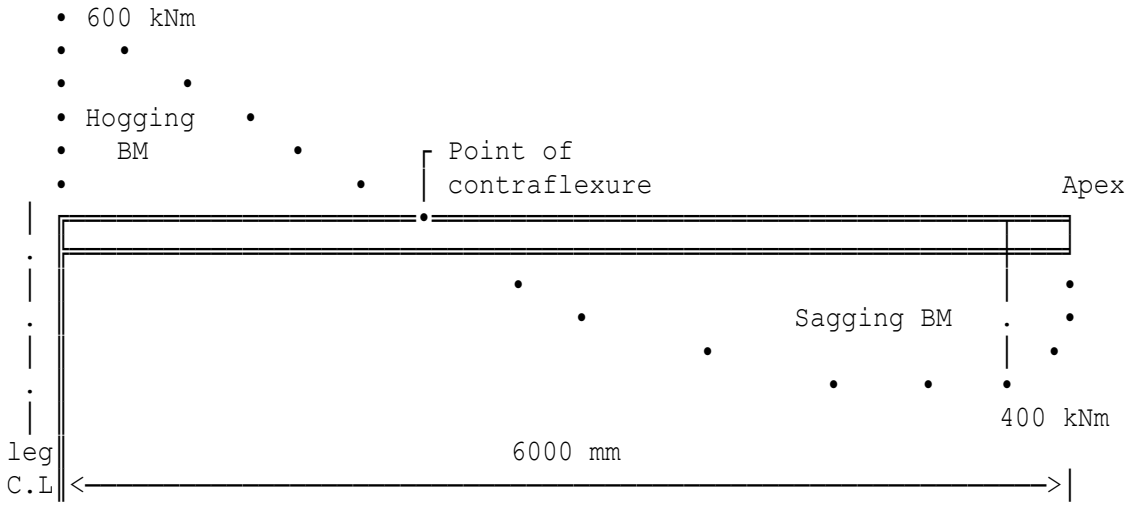

Location: Example 3 'SHS Design Examples'

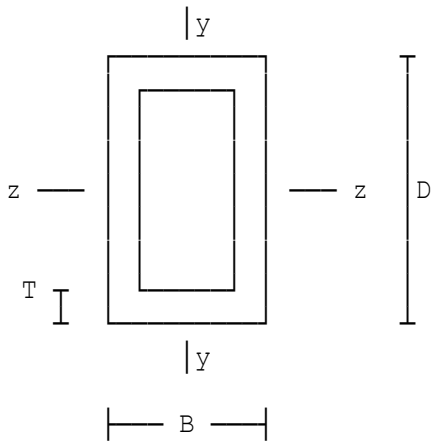

Structural Hollow Section Design

Calculations are in accordance with BS5950-1:2000 Sections 4.7 and 4.8.

All loads and moments are factored.

Factored bending moment axis zz	Mz=5.04 kNm
Factored SF in y direction	Fv=5.6 kN
Axial load (+ve compression)	F=598 kN
Length of member	L=3.6 m

150 x 150 x 6.3 SHS - Hot finished.
Properties (cm): A=35.8 rx=5.85 Zx=163 Sx=192 Ix=1220 J=1910 C=240

Length between restraints z-axis	Lz=3600 mm
Length between restraints y-axis	Ly=1800 mm
Young's Modulus	E=205 kN/mm²

Quarter point	m2=0 kNm
Mid-span	m3=5.04 kNm
Three quarter point	m4=0 kNm
Quarter point	mz2=0 kNm
Mid-span	mz3=5.04 kNm
Three quarter point	mz4=0 kNm
Maximum moment on central half	M24=5.04 kNm
Quarter point	m2=0 kNm
Mid-span	m3=5.04 kNm
Three quarter point	m4=0 kNm

HOT FINISHED
SQUARE HOLLOW SECTION
SECTION
SUMMARY

In accordance with EN 10210
150 x 150 x 6.3 SHS Grade S 275
Section is satisfactory for axial load, and overall buckling check.

Axial load	**598 kN**
Compression resistance	**890.21 kN**
Maximum moment z axis	**5.04 kNm**
Moment capacity	**52.8 kNm**
Local capacity check	**0.70287 ≤ 1**
Overall buckling checks	**0.77377 ≤ 1**
	0.65972 ≤ 1

Location: Example 2 - Bending and axial load

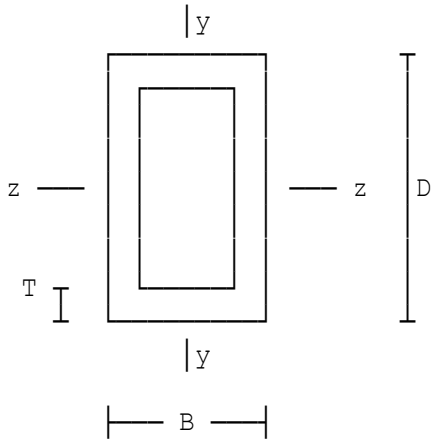

Structural Hollow Section Design

Calculations are in accordance with BS5950-1:2000 Sections 4.7 and 4.8.

All loads and moments are factored.

Factored bending moment axis zz	Mz=350 kNm
Factored SF in y direction	Fv=129 kN
Axial load (+ve compression)	F=-400 kN
Length of member	L=7.6 m

400 x 200 x 8 RHS - Cold formed.
Properties (cm): A=91.2 rx=14.4 Zx=949 Sx=1170 Ix=19000
J=15800 C=1130 Zy=652 Sy=728 Iy=6520 ry=8.45
TENSILE LOAD APPLIED

Young's Modulus	E=205 kN/mm²
Estimated net area (tension)	Ae=91.2 cm²

COLD FORMED	**In accordance with EN 10219**
RECTANGULAR HOLLOW SECTION	**400 x 200 x 8 RHS Grade S 355**
SECTION	**Section is satisfactory for axial**
SUMMARY	**load, and overall buckling check.**
	Axial load -400 kN
	Axial capacity 3237.6 kN
	Maximum moment z axis 350 kNm
	Moment capacity 415.35 kNm
	Reduced moment cap. 408.31 kNm

Location: Example 3 - minor axis - compressive load

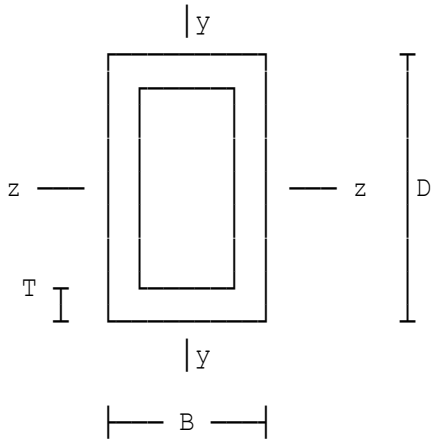

Structural Hollow Section Design

Calculations are in accordance with BS5950-1:2000 Sections 4.7 and 4.8.

All loads and moments are factored.

Factored bending moment axis zz	Mz=208 kNm
Factored SF in y direction	Fv=194 kN
Axial load (+ve compression)	F=300 kN
Length of member	L=8 m

250 x 450 x 8 RHS - Hot finished.
Properties (cm): A=109 rx=10.6 Zx=971 Sx=1080 Ix=12100
J=27100 C=1630 Zy=1340 Sy=1620 Iy=30100 ry=16.6

Length between restraints z-axis	Lz=8000 mm
Length between restraints y-axis	Ly=8000 mm
Young's Modulus	E=205 kN/mm²
Far end BM	betaM=100 kNm
Force applied through flange	Fbw=194 kN
Stiff bearing length	b1=300 mm
Distance to nearer end of member	ae=150 mm

HOT FINISHED
RECTANGULAR HOLLOW SECTION
SECTION
SUMMARY

In accordance with EN 10210
250 x 450 x 8 RHS Grade S 355
Section is satisfactory for axial load, and overall buckling check.

Axial load	**300 kN**
Compression resistance	**2620.4 kN**
Maximum moment z axis	**208 kNm**
Moment capacity	**254.43 kNm**
Local capacity check	**0.9159 ≤ 1**
Overall buckling checks	**0.97881 ≤ 1**
	0.4276 ≤ 1

Location: Example 3 'SHS Design Examples' - fire check

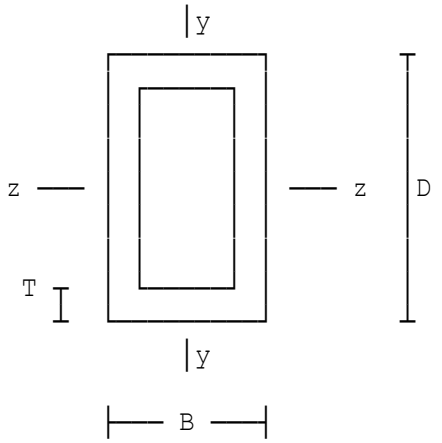

Structural Hollow Section Design

Calculations are in accordance with BS5950-1:2000 Sections 4.7 and 4.8.

All loads and moments are factored.

Factored bending moment axis zz	Mz=5.04 kNm
Factored SF in y direction	Fv=5.6 kN
Axial load (+ve compression)	F=598 kN
Length of member	L=3.6 m

150 x 150 x 6.3 SHS - Hot finished.
Properties (cm): A=35.8 rx=5.85 Zx=163 Sx=192 Ix=1220 J=1910 C=240

Length between restraints z-axis	Lz=3600 mm
Length between restraints y-axis	Ly=1800 mm
Young's Modulus	E=205 kN/mm²

Quarter point	m2=0 kNm
Mid-span	m3=5.04 kNm
Three quarter point	m4=0 kNm
Quarter point	mz2=0 kNm
Mid-span	mz3=5.04 kNm
Three quarter point	mz4=0 kNm
Maximum moment on central half	M24=5.04 kNm
Quarter point	m2=0 kNm
Mid-span	m3=5.04 kNm
Three quarter point	m4=0 kNm

HOT FINISHED	**In accordance with EN 10210**
SQUARE HOLLOW SECTION	**150 x 150 x 6.3 SHS Grade S 275**
SECTION	**Section is satisfactory for axial**
SUMMARY	**load, and overall buckling check.**
	Axial load 598 kN
	Compression resistance 890.21 kN
	Maximum moment z axis 5.04 kNm
	Moment capacity 52.8 kNm
	Local capacity check 0.70287 ≤ 1
	Overall buckling checks 0.77377 ≤ 1
	0.65972 ≤ 1

FIRE RESISTANCE SUMMARY

Heated perimeter	**450 mm²**
Area of section	**35.8 cm²**
Section factor	**125 /m**
Load Ratio (R)	**0.67**

Section does not have an inherent fire resistance of 30 minutes.
Fire protection should be provided.

Location: SCI example

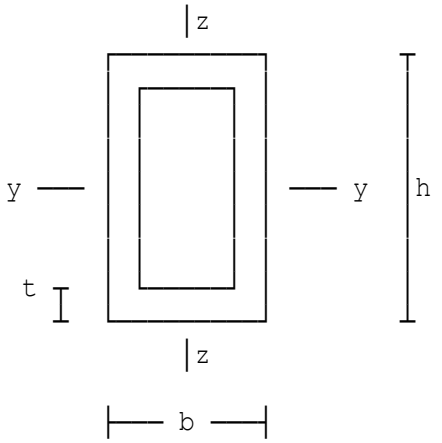

Hollow section beam design

Calculations are in accordance with BS EN 1993-1-1:2005. Internal forces and moments have been determined by elastic global analysis.

All forces and moments are factored.

Moment about y-y axis	MyEd=10.1 kNm
Shear force	VzEd=11.2 kN
Axial load (+ve compression)	NEd=525 kN
Length of member	L=3.6 m

150 x 150 x 5 SHS - Hot finished.
Properties (cm): A=28.7 iy=5.9 Wely=134 Wply=156 Iy=1000 It=1550
Wt=197

Shear force at maximum BM	V=11.2 kN
Length between restraints (y-y)	Ly=3.6 m
Length between restraints (z-z)	Lz=1.8 m
Maximum end moment	Mh(1)=10.1 kNm
Maximum span moment	Ms(1)=-10.1 kNm
End moment	pMh(1)=10.1 kNm
Effective length parameter	K=1
Length for LTB	LT=1.8 m
Maximum moment on section	M=10.1 kNm
Far end moment	psiM=-10.1 kNm

HOT FINISHED	**In accordance with EN 10210**	
SQUARE HOLLOW SECTION	**150 x 150 x 5 SHS Grade S 355**	
DESIGN	**Design BM y-y axis**	**10.1 kNm**
SUMMARY	**Moment resistance (y-y)**	**55.38 kNm**
	Design compression load	**525 kN**
	Buckling resistance	**811.76 kN**
	Interaction factors	**0.84909 ≤ 1**
		0.66209 ≤ 1

Location: Bending only

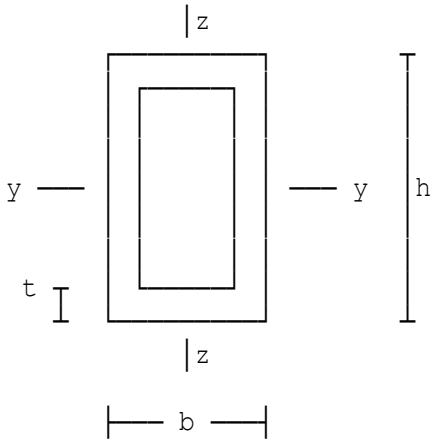

Hollow section beam design

Calculations are in accordance with BS EN 1993-1-1:2005. Internal forces and moments have been determined by elastic global analysis.

All forces and moments are factored.

Moment about y-y axis	MyEd=160 kNm
Shear force	VzEd=120 kN
Axial load (+ve compression)	NEd=0 kN
Length of member	L=8 m

250 x 150 x 8 RHS - Hot finished.
Properties (cm): A=60.8 iz=6.15 Wely=409 Wply=501 Iy=5110
It=5020 Wt=506 Welz=306 Wplz=350 Iz=2300 iy=9.17

Shear force at maximum BM	V=0 kN
Effective length parameter	K=0.85
Length for LTB	LT=8 m
Span of beam for deflection	Ld=8000 mm

HOT FINISHED	**In accordance with EN 10210**	
RECTANGULAR HOLLOW SECTION	**250 x 150 x 8 RHS Grade S 355**	
DESIGN	**Design BM y-y axis**	**160 kNm**
SUMMARY	**Moment resistance (y-y)**	**177.86 kNm**

Location: Default example

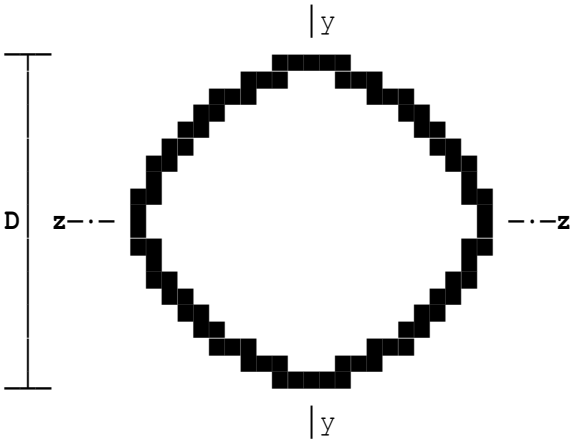

Circular Hollow Section (CHS)

Calculations in accordance with BS 5950:Part 1:2000 **Sections 4.7 and 4.8.**

All loads and moments are factored.

Design moment axis zz	Mz=5.04 kNm
Design SF in y direction	Fv=5.6 kN
Axial load (+ve compression)	F=598 kN
Length of member	L=3.6 m
Factored moment about axis yy	My=0 kNm

193.7 dia x 5 thick CHS - Hot finished.
Properties (cm): A=29.641 r=6.6739 Z=136.32 S=178.08 I=1320.2

Young's Modulus	E=205 kN/mm²
Length between restraints z axis	Lz=3600 mm
Length between restraints y axis	Ly=1800 mm
Quarter point	m2=0 kNm
Mid-span	m3=5.04 kNm
Three quarter point	m4=0 kNm
Quarter point	mz2=0 kNm
Mid-span	mz3=5.04 kNm
Three quarter point	mz4=0 kNm
Maximum moment on central half	M24=5.04 kNm

HOT FINISHED CIRCULAR HOLLOW SECTION & DESIGN SUMMARY

In accordance with EN 10210
193.7 mm O.D. x 5 mm CHS Grade S 275
Section is satisfactory for bending axial load, local capacity and overall buckling check.

Axial load	**598 kN**
Compression resistance	**756.09 kN**
Maximum moment z zxis	**5.04 kNm**
Moment capacity	**48.972 kNm**
Local capacity check	**0.83655 ≤ 1**
Overall buckling check	**0.90581 ≤ 1**

Location: Tensile load and moment about one axis

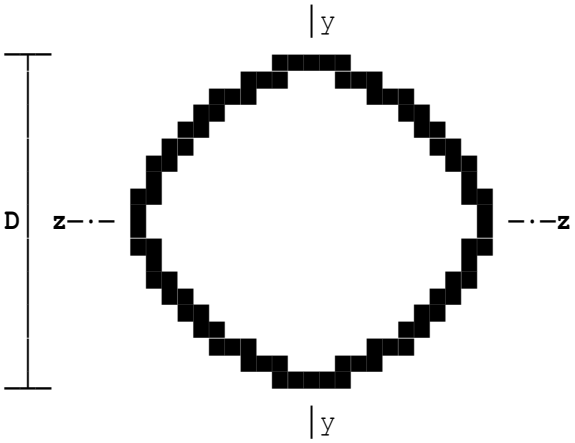

Circular Hollow Section (CHS)

Calculations in accordance with BS 5950:Part 1:2000 **Sections 4.7 and 4.8.**

All loads and moments are factored.

Design moment axis zz	Mz=125 kNm
Design SF in y direction	Fv=98 kN
Axial load (+ve compression)	F=-300 kN
Length of member	L=9 m
Factored moment about axis yy	My=0 kNm

TENSILE LOAD APPLIED
323.9 dia x 5 thick CHS - Hot finished.
Properties (cm): A=50.093 r=11.276 Z=393.3 S=508.53 I=6369.4

Young's Modulus	E=205 kN/mm²
Estimated net area (tension)	Ae=50 cm²

HOT FINISHED CIRCULAR HOLLOW SECTION & DESIGN SUMMARY

In accordance with EN 10210
323.9 mm O.D. x 5 mm CHS Grade S 355
Section is satisfactory for bending axial load, local capacity and overall buckling check.

Axial load	**-300 kN**
Tensile capacity	**1775 kN**
Maximum moment z zxis	**125 kNm**
Moment capacity	**157.47 kNm**
Local capacity check	**0.9628 ≤ 1**

Location: Biaxial bending

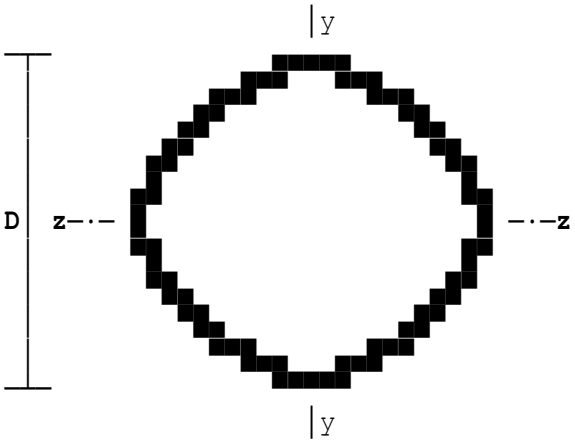

Circular Hollow Section (CHS)

Calculations in accordance with BS 5950:Part 1:2000 **Sections 4.7 and 4.8.**

All loads and moments are factored.

Design moment axis zz	Mz=47 kNm
Design SF in y direction	Fv=46 kN
Axial load (+ve compression)	F=48 kN
Length of member	L=6 m
Factored moment about axis yy	My=24 kNm

219.1 dia x 5 thick CHS - Cold formed.
Properties (cm): A=33.631 r=7.5716
Z=Zx=176 S=Sx=229.24 I=Ix=1928

Young's Modulus	E=205 kN/mm²
Length between restraints z axis	Lz=6000 mm
Length between restraints y axis	Ly=6000 mm
Far end BM	betaM=0 kNm
Maximum moment on segment	Mz=47 kNm
Far end BM	betaMz=0 kNm
Far end BM	betaMy=0 kNm
Maximum moment on segment	Mmaxy=24 kNm
Far end BM	betay=0 kNm

COLD FORMED CIRCULAR HOLLOW SECTION & DESIGN SUMMARY

In accordance with EN 10219
219.1 mm O.D. x 5 mm CHS Grade S 355
Section is satisfactory for bending axial load, local capacity and overall buckling check.

Axial load	**48 kN**
Compression resistance	**755.88 kN**
Maximum moment z zxis	**47 kNm**
Moment capacity	**74.975 kNm**
Maximum moment y zxis	**24 kNm**
Moment capacity	**74.975 kNm**
Local capacity check	**0.98719 ≤ 1**
Overall buckling checks	**0.5476 ≤ 1**
	0.62598 ≤ 1

Location: Default example + fire check

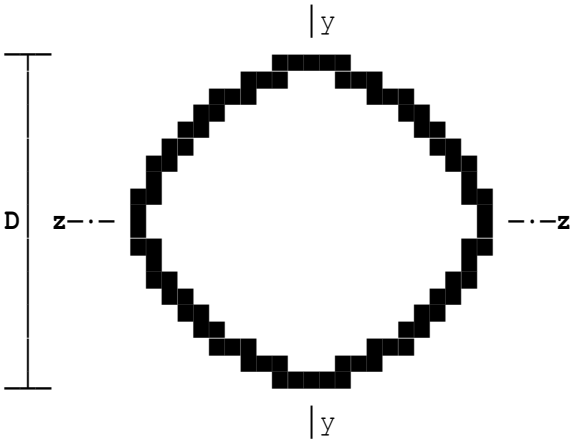

Circular Hollow Section (CHS)

Calculations in accordance with BS 5950:Part 1:2000 **Sections 4.7 and 4.8.**

All loads and moments are factored.

Design moment axis zz	Mz=5.04 kNm
Design SF in y direction	Fv=5.6 kN
Axial load (+ve compression)	F=598 kN
Length of member	L=3.6 m
Factored moment about axis yy	My=0 kNm

193.7 dia x 5 thick CHS - Hot finished.
Properties (cm): A=29.641 r=6.6739 Z=136.32 S=178.08 I=1320.2

Young's Modulus	E=205 kN/mm²
Length between restraints z axis	Lz=3600 mm
Length between restraints y axis	Ly=1800 mm
Quarter point	m2=0 kNm
Mid-span	m3=5.04 kNm
Three quarter point	m4=0 kNm
Quarter point	mz2=0 kNm
Mid-span	mz3=5.04 kNm
Three quarter point	mz4=0 kNm
Maximum moment on central half	M24=5.04 kNm
values to applied factored values	Rf=0.55

HOT FINISHED CIRCULAR HOLLOW SECTION & DESIGN SUMMARY

In accordance with EN 10210
193.7 mm O.D. x 5 mm CHS Grade S 275
Section is satisfactory for bending axial load, local capacity and overall buckling check.

Axial load	**598 kN**
Compression resistance	**756.09 kN**
Maximum moment z zxis	**5.04 kNm**
Moment capacity	**48.972 kNm**
Local capacity check	**0.83655 ≤ 1**
Overall buckling check	**0.90581 ≤ 1**

FIRE RESISTANCE SUMMARY

Heated perimeter	**608.53 mm²**
Area of section	**29.641 cm²**
Section factor	**205 /m**
Load Ratio (R)	**0.47463**

Section does not have an inherent fire resistance of 30 minutes.
Fire protection should be provided.

Location: Default example - intermediate column length

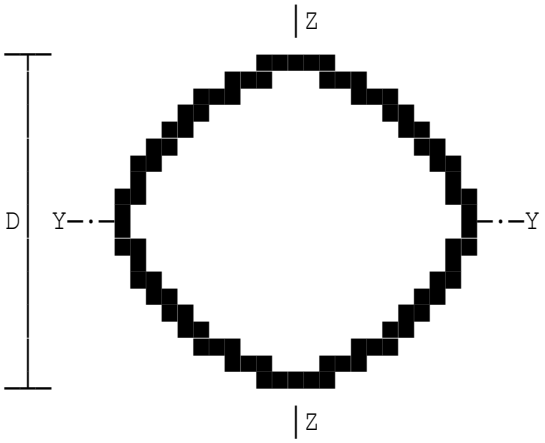

Circular Hollow Section (CHS)

Calculations are in accordance with BS EN 1993-1-1:2005. Internal forces and moments have been determined by elastic global analysis.

All forces and moments are factored.

Moment about y-y axis	MyEd=50 kNm
Shear force	VzEd=22 kN
Axial load (+ve compression)	NEd=760 kN
Length of member	L=7 m
Moment about z-z axis	MzEd=50 kNm
Accompanying shear force	VyEd=22 kNm

244.5 dia x 8 thick CHS - Hot finished.
Properties (cm): A=59.439 iy=8.3663 Wely=340.32 Wply=447.63 Iy=4160.4
It=8320.9

Shear force at maximum BM	V=22 kN
Length between restraints (y-y)	Ly=7 m
Length between restraints (z-z)	Lz=7 m
Far end bending moment	pM(1)=-50 kNm
Far end bending moment	pM(2)=-50 kNm
Length for LTB	LT=7 m
Effective length parameter	K=0.85
Maximum moment on section	M=50 kNm
Far end moment	psiM=-50 kNm

HOT FINISHED	**In accordance with EN 10210**	
CIRCULAR HOLLOW	**244.5 mm O.D. x 8 mm CHS**	**Grade S 355**
DESIGN	**Design BM y-y axis**	**50 kNm**
SUMMARY	**Moment resistance (y-y)**	**158.91 kNm**
	Design BM z-z axis	**50 kNm**
	Moment resistance (z-z)	**158.91 kNm**
	Design compression load	**760 kN**
	Axial resistance	**2110.1 kN**
	Interaction factors	**0.89904 ≤ 1**
		0.89904 ≤ 1

Location: Bending only

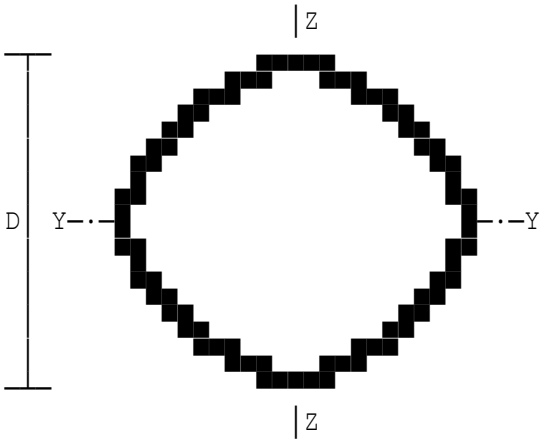

Circular Hollow Section (CHS)

Calculations are in accordance with BS EN 1993-1-1:2005. Internal forces and moments have been determined by elastic global analysis.

All forces and moments are factored.

Moment about y-y axis	MyEd=155 kNm
Shear force	VzEd=77.5 kN
Axial load (+ve compression)	NEd=0 kN
Length of member	L=8 m
Moment about z-z axis	MzEd=70 kNm
Accompanying shear force	VyEd=30 kNm

244.5 dia x 8 thick CHS - Cold formed.

Properties (cm): A=59.439 iy=8.3663 Wely=340.32 Wply=447.63 Iy=4160.4 It=8320.9

Shear force at maximum BM	V=0 kN
Length for LTB	LT=8 m
Effective length parameter	K=0.85
Span of member for deflection	Ld=8000 mm

COLD FORMED	**In accordance with EN 10219**	
CIRCULAR HOLLOW	**244.5 mm O.D. x 8 mm CHS Grade S 355**	
DESIGN	**Design BM y-y axis**	**155 kNm**
SUMMARY	**Moment resistance (y-y)**	**158.91 kNm**
	Design BM z-z axis	**70 kNm**
	Moment resistance (z-z)	**158.91 kNm**

Location: Tension and bending

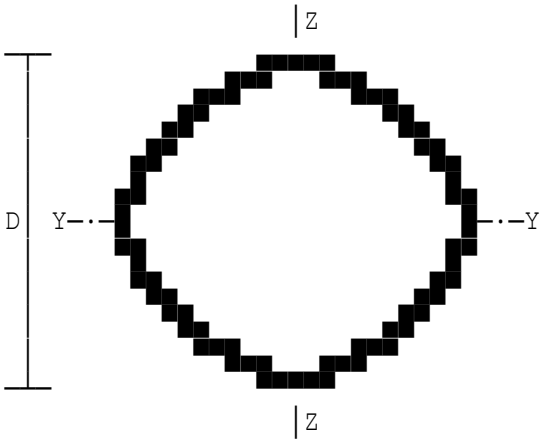

Circular Hollow Section (CHS)

Calculations are in accordance with BS EN 1993-1-1:2005. Internal forces and moments have been determined by elastic global analysis.

All forces and moments are factored.

Moment about y-y axis	MyEd=45 kNm
Shear force	VzEd=78 kN
Axial load (+ve compression)	NEd=-500 kN
Length of member	L=8 m
Moment about z-z axis	MzEd=0 kNm

244.5 dia x 5 thick CHS - Cold formed.

Properties (cm): A=37.621 iy=8.4694 Wely=220.74 Wply=286.84 Iy=2698.6 It=5397.2

Shear force at maximum BM	V=78 kN
Length for LTB	LT=8 m
Effective length parameter	K=1
Maximum moment on section	M=45 kNm
Far end moment	psiM=0 kNm

COLD FORMED	**In accordance with EN 10219**	
CIRCULAR HOLLOW	**244.5 mm O.D. x 5 mm CHS**	**Grade S 355**
DESIGN	**Design BM y-y axis**	**45 kNm**
SUMMARY	**Moment resistance (y-y)**	**78.364 kNm**
	Design tensile load	**500 kN**
	Axial resistance	**1335.5 kN**
	Interaction factors	**0.94863 ≤ 1**

Location: Compression and bending about one axis

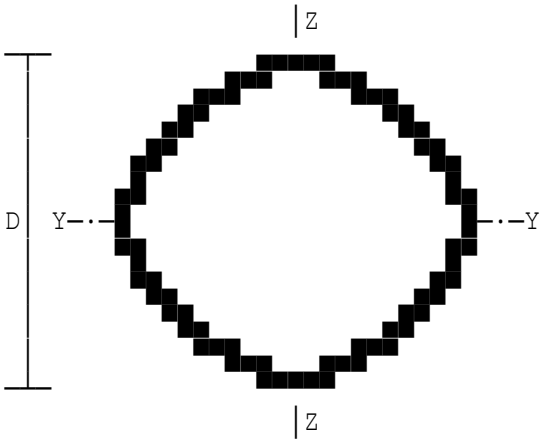

Circular Hollow Section (CHS)

Calculations are in accordance with BS EN 1993-1-1:2005. Internal forces and moments have been determined by elastic global analysis.

All forces and moments are factored.

Moment about y-y axis	MyEd=45 kNm
Shear force	VzEd=78 kN
Axial load (+ve compression)	NEd=350 kN
Length of member	L=8 m
Moment about z-z axis	MzEd=0 kNm

273 dia x 5 thick CHS - Cold formed.
Properties (cm): A=42.097 iy=9.4769 Wely=276.98 Wply=359.16 Iy=3780.8
It=7561.6

Shear force at maximum BM	V=78 kN
Length between restraints (y-y)	Ly=8 m
Length between restraints (z-z)	Lz=8 m
Far end bending moment	pM(1)=0 kNm
Length for LTB	LT=8 m
Effective length parameter	K=1
Maximum moment on section	M=45 kNm
Far end moment	psiM=0 kNm

COLD FORMED	**In accordance with EN 10219**	
CIRCULAR HOLLOW	**273 mm O.D. x 5 mm CHS Grade S 355**	
DESIGN	**Design BM y-y axis**	**45 kNm**
SUMMARY	**Moment resistance (y-y)**	**98.329 kNm**
	Design compression load	**350 kN**
	Axial resistance	**1494.5 kN**
	Interaction factors	**0.84088 ≤ 1**
		0.76994 ≤ 1

Location: Example 'Design of RHS Slimflor Floor Edge Beams'

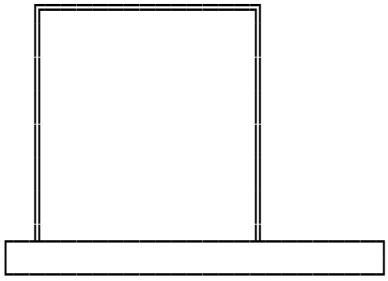

Simply supported edge beam

Slim floor construction non-composite beam. Calculations are in accordance with BS5950 and the SCI publication entitled 'Design of RHS Slimflor Edge beams'.

A plate is welded to the bottom of the hollow section to support the precast floor units.

Beam span	L1=6 m
Beam cross-centres	L2=6 m
Precast floor units	wu=2.44 kN/m²
Construction load	wc=0.5 kN/m²
Floor (decking) & minor services	wf=0.2 kN/m²
Ceiling & services	wci=0.5 kN/m²
Self weight of steel	ws=1.2 kN/m
Cladding (dead)	Wcl=8 kN/m
Occupancy	wo=3.5 kN/m²
Partitions	wp=1 kN/m²

Loading summary

1. Cladding	Wc=1.4*Wcl*L1=67.2 kN
2. Self weight	Wsw=1.4*ws*L1=10.08 kN
3. Dead + Imposed	Wdes=(1.4*(wf+wu+wci)+1.6*wi)*L1*L2 /2=208.73 kN

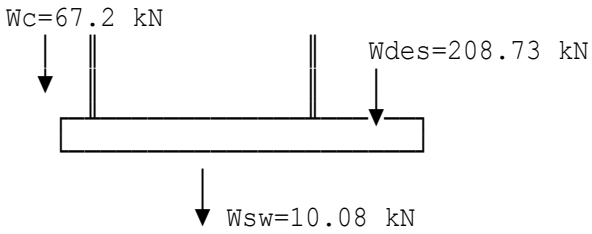

250 x 150 x 16 RHS - Hot finished.
Properties (cm): A=115 rx=8.79 Zx=710 Sx=906 Ix=8880
J=8870 C=849 Zy=516 Sy=625 Iy=3870 ry=5.8

Young's Modulus	E=205 kN/mm²
Thickness of plate	Tp=15 mm
Width of plate	Bp=270 mm

Weld leg length	s=6 mm
Thickness of plate	tp=10 mm
Diameter of bolts	db=20 mm

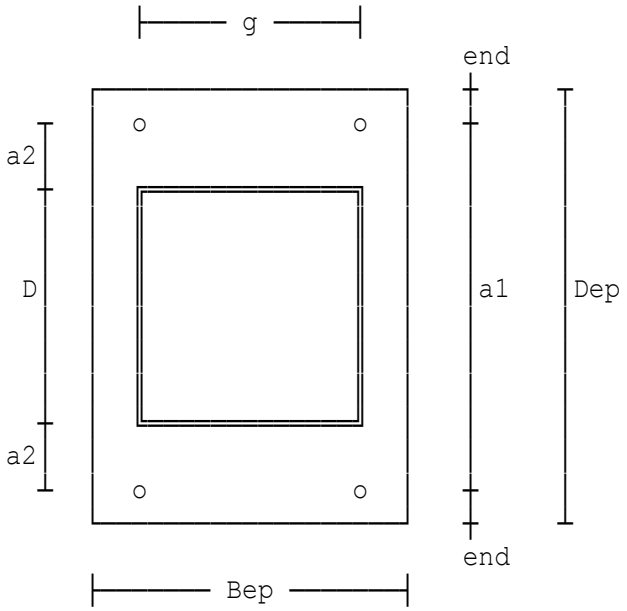

Depth of end plate	Dep=400 mm
Width of end plate	Bep=200 mm
Bolt cross-centres	g=140 mm
Bolt pitch vertically	a1=340 mm

HOT FINISHED	**In accordance with EN 10210**
RECTANGULAR HOLLOW SECTION	**250 x 150 x 16 RHS Grade S 355**
	Design strength 355 N/mm²
BOTTOM PLATE	**270 mm x 15 mm Grade S 355**
	Design strength 355 N/mm²
	Design shear force 143 kN
DESIGN	**Shear capacity 1530.9 kN**
SUMMARY	**Design moment 214.51 kNm**
	Buckling resistance 463 kNm
	(A) Ultimate limit state
	Buckling check 0.43257 ≤ 1
	Local capacity check 243.18 N/mm²
	(B) Serviceability state
	Imposed load deflection 8.7333 mm
	Limiting deflection 12 mm

Location: Ex1 - From 'Design of RHS Slimflor Floor Edge Beams'

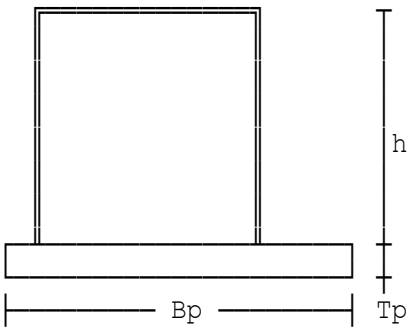

Simply supported edge beam

Slim floor construction non-composite beam. Calculations are in accordance with EC3 Part 1-1 and SCI publication entitled 'Design of RHS Slimflor Edge beams'.

A plate is welded to the bottom of the hollow section to support the precast floor units.

Beam span	L1=6 m
Beam cross-centres	L2=6 m
Precast floor units	wu=2.44 kN/m²
Construction load	wc=0.5 kN/m²
Floor (decking) & minor services	wf=0.2 kN/m²
Ceiling & services	wci=0.5 kN/m²
Self weight of steel	ws=1.2 kN/m
Cladding (permanent)	Wcl=8 kN/m
Occupancy	wo=3.5 kN/m²
Partitions	wp=1 kN/m²

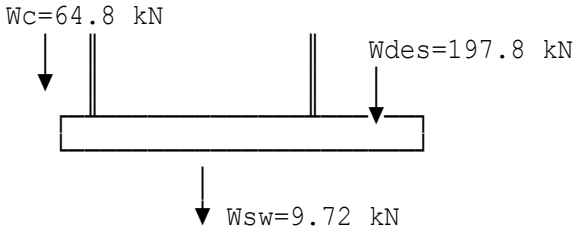

250 x 150 x 16 RHS - Hot finished.
Properties (cm): A=115 iz=5.8 Wely=710 Wply=906 Iy=8880
It=8870 Wt=849 Welz=516 Wplz=625 Iz=3870 iy=8.79
Dimensions (mm): h=250 b=150 t=16

Thickness of plate	Tp=15 mm
Width of plate	Bp=270 mm

Weld size (leg length) s=6 mm
Diameter of bolts db=20 mm

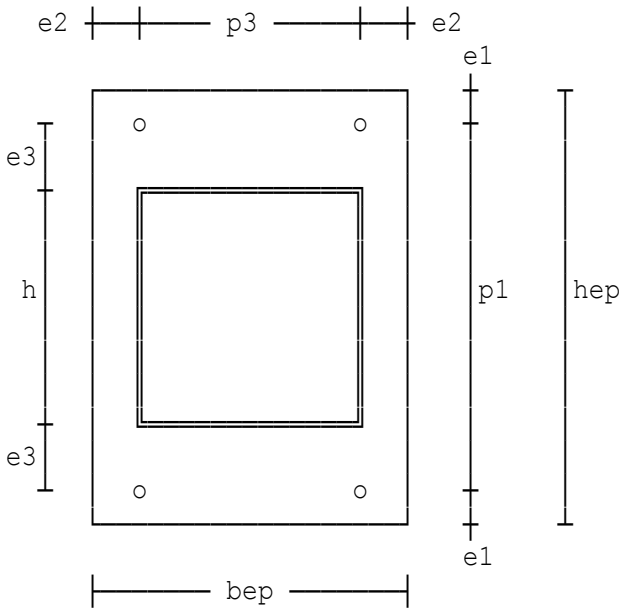

Depth of end plate hep=400 mm
Width of end plate bep=200 mm
Bolt cross-centres p3=140 mm
Bolt pitch vertically p1=340 mm
Weld size (leg length) sw=12 mm

HOT FINISHED	**In accordance with EN 10210**	
RECTANGULAR HOLLOW SECTION	**250 x 150 x 16 RHS Grade S 355**	
	Design strength	**355 N/mm²**
BOTTOM PLATE	**270 mm x 15 mm Grade S 355**	
	Design strength	**355 N/mm²**
	Design shear force	**136.16 kN**
DESIGN	**Shear plastic resistance**	**1473.1 kN**
SUMMARY	**Design moment**	**204.24 kNm**
	Buckling resistance	**463.2 kNm**
	Variable load deflection	**8.5254 mm**
	Limiting deflection	**12 mm**
	Interaction factor	**0.47081 ≤ 1**

Location: Example 1 from 'Slim Floor Design and Construction'

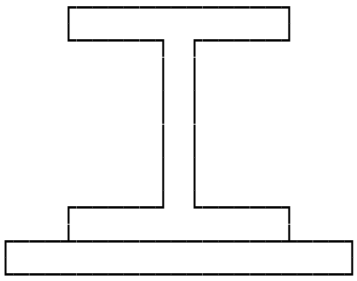

Simply supported beam

Slim floor construction
Non-composite beam.
Calculations are in
accordance with BS5950
and 'Slim Floor Design
and Construction'
published by SCI.

Beam span	L1=7.5 m
Beam cross-centres	L2=7.5 m
Precast units	wu=2.67 kN/m²
Self weight of steel	ws=0.24 kN/m²
Construction load	wc=0.5 kN/m²
Floor & minor services	wf=0.25 kN/m²
Ceiling	wci=0 kN/m²
Grout to beam (to half depth)	wg=0.15 kN/m²
Occupancy	wo=2.5 kN/m²
Partitions	wp=1 kN/m²
305 x 305 x 118 UC.	
Young's Modulus	E=205 kN/mm²
Thickness of plate	Tp=15 mm
Width of plate	Bp=510 mm
Weld leg length	s=8 mm
Thickness of plate	tp=10 mm
Grade of steel	pgrade=275
Diameter of bolts	db=24 mm
Total number of bolts	bn=6

CONNECTION SUMMARY

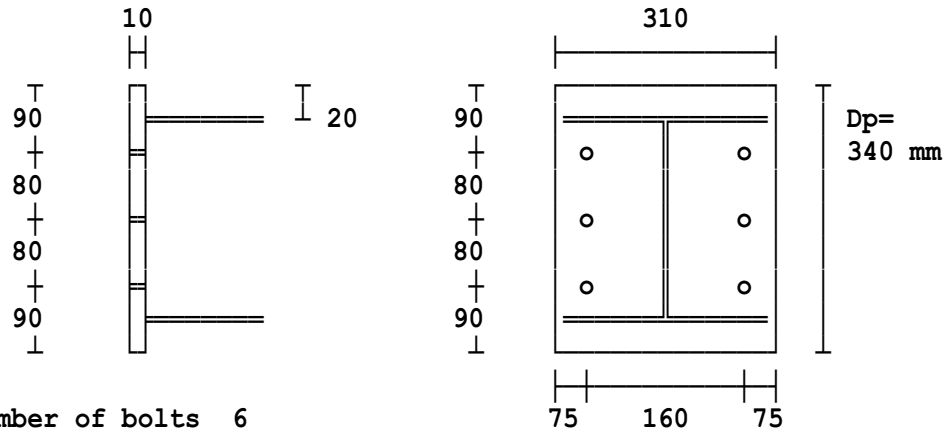

Number of bolts	**6**
Bolt diameter	**24 mm**
Bolt grade	**8.8**
Plate grade	**S 275**

UNIVERSAL COLUMN	**305 x 305 x 118 UC Grade S 355**	
	Design strength	**345 N/mm²**
BOTTOM PLATE	**510 mm x 15 mm Grade S 355**	
	Design strength	**355 N/mm²**
	Design shear force	**278.8 kN**
DESIGN	**Shear capacity**	**781.2 kN**
SUMMARY	**Design moment**	**522.8 kNm**
	Buckling resistance	**536.5 kNm**
	Construction stage	
	Buckling check	**0.6404 ≤ 1**
	Local capacity check	**195 N/mm²**
	In-service stage	
	Local capacity check	**357.1 N/mm²**
	Serviceability stress	**179 N/mm²**
	Imposed load deflection	**12 mm**
	Limiting deflection	**20.83 mm**

Location: Example1 from 'Slim Floor Design and Construction'

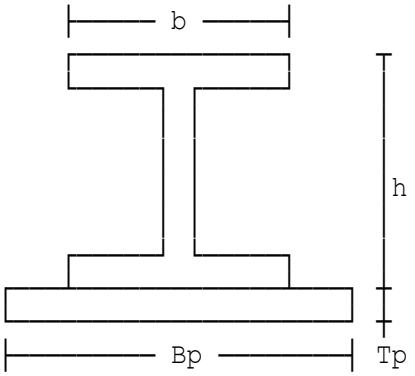

Simply supported beam

Slim floor construction non-composite beam. Calculations are in accordance with EC3 Part 1-1 & SCI P385 entitled 'Design of Steel Beams in Torsion'.

A plate is welded to the bottom flange of the UC section extending beyond the bottom flange by 100 mm either side to support the precast units.

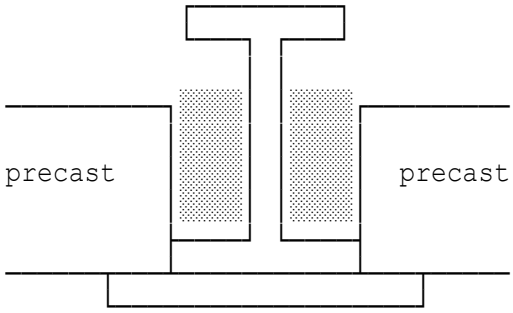

Non-composite case

Shading represents the filling required with this floor construction case.

Beam span	L1=7.5 m
Beam cross-centres	L2=7.5 m
Precast concrete units	wu=2.67 kN/m²
Self weight of steel	ws=0.24 kN/m²
Construction load	wc=0.5 kN/m²
Floor & minor services	wf=0.25 kN/m²
Ceiling	wci=0 kN/m²
Grout to beam (to half depth)	wg=0.15 kN/m²
Occupancy	wo=2.5 kN/m²
Partitions	wp=1 kN/m²
305 x 305 x 118 UKC	
Thickness of plate	Tp=15 mm
Width of plate	Bp=510 mm
Weld size (leg length)	s=8 mm
Diameter of bolts	db=24 mm
Total number of bolts to be used	bn=6
Weld size (leg length)	sw=10 mm

CONNECTION SUMMARY

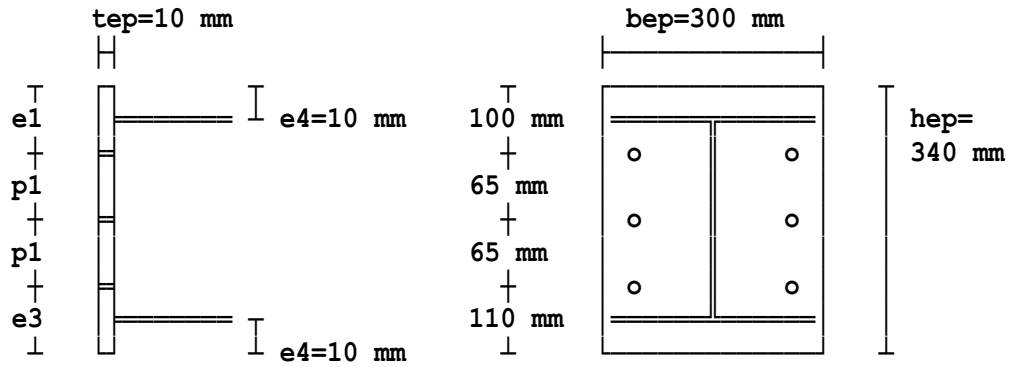

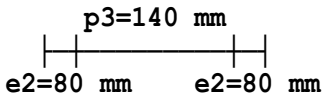

Number of bolts	6
Bolt diameter	24 mm
Bolt grade	8.8
Plate grade	S 275

UNIVERSAL COLUMN	305 x 305 x 118 UKC Grade S 355	
	Design strength	345 N/mm²
BOTTOM PLATE	510 mm x 15 mm Grade	S 355
	Design strength	355 N/mm²
	Design shear force	264.9 kN
DESIGN	Shear plastic resistance	855.7 kN
SUMMARY	Design moment	496.7 kNm
	Buckling resistance	615.5 kNm
	Variable load deflection	11.71 mm
	Limiting deflection	20.83 mm
	Interaction factors	0.4196 ≤ 1
		0.4283 ≤ 1
		0.5737 ≤ 1

NOTE: Use normal weight concrete (NWC) and provide reinforcement through holes in the beam web to tie the floor on each side of the beam together in order to meet robustness requirements. The use of T12 x 1200 long tie bars @ 600 c/c would normally suffice.

Location: Ex2 - Semi-composite

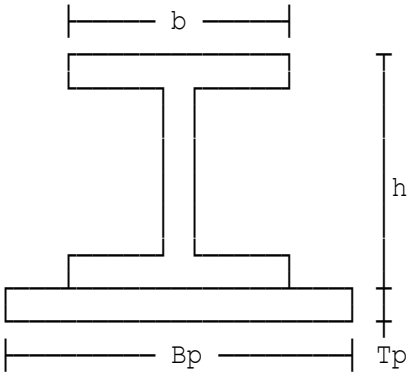

Simply supported beam

Slim floor construction non-composite beam. Calculations are in accordance with EC3 Part 1-1 & SCI P385 entitled 'Design of Steel Beams in Torsion'.

A plate is welded to the bottom flange of the UC section extending beyond the bottom flange by 100 mm either side to support the precast units.

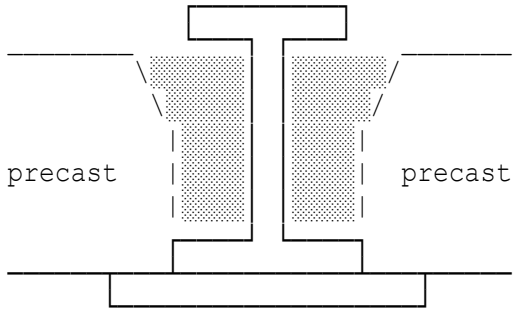

Semi-composite case

Shading represents the filling required with this floor construction case.

Beam span	L1=7.5 m
Beam cross-centres	L2=7.5 m
Precast concrete units	wu=2.67 kN/m²
Self weight of steel	ws=0.24 kN/m²
Construction load	wc=0.5 kN/m²
Floor & minor services	wf=0.25 kN/m²
Ceiling	wci=0 kN/m²
Beam encasement	wg=0.15 kN/m²
Occupancy	wo=2.5 kN/m²
Partitions	wp=1 kN/m²
305 x 305 x 118 UKC	
Thickness of plate	Tp=15 mm
Width of plate	Bp=510 mm
Weld size (leg length)	s=8 mm
Diameter of bolts	db=24 mm
Total number of bolts to be used	bn=4
Weld size (leg length)	sw=10 mm

CONNECTION SUMMARY

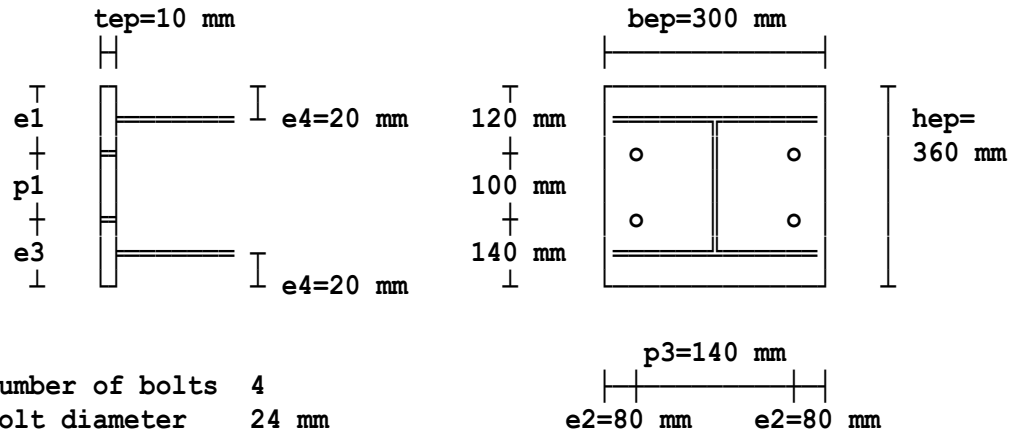

Number of bolts	4
Bolt diameter	24 mm
Bolt grade	8.8
Plate grade	S 275

UNIVERSAL COLUMN	305 x 305 x 118 UKC Grade S 355	
	Design strength	345 N/mm²
BOTTOM PLATE	510 mm x 15 mm Grade	S 355
	Design strength	355 N/mm²
	Design shear force	264.9 kN
DESIGN	Shear plastic resistance	855.7 kN
SUMMARY	Design moment	496.7 kNm
	Buckling resistance	615.5 kNm
	Variable load deflection	9.946 mm
	Limiting deflection	20.83 mm
	Interaction factors	0.4196 ≤ 1
		0.4283 ≤ 1

NOTE: Use normal weight concrete (NWC) and provide reinforcement through holes in the beam web to tie the floor on each side of the beam together in order to meet robustness requirements. The use of T12 x 1200 long tie bars @ 600 c/c would normally suffice.

Location: Ex1 from 'Slim Floor Design and Construction'

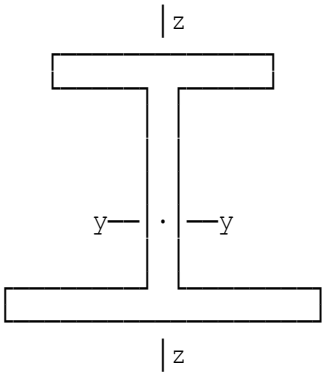

Simply supported beam

Slim floor construction non-composite asymmetric beam. Calculations are in accordance with EC3 Part 1-1 and SCI publication P385 entitled 'Design of Steel Beams in Torsion'.

Axis y-y passes through the asymmetric beam (ASB) centroid.

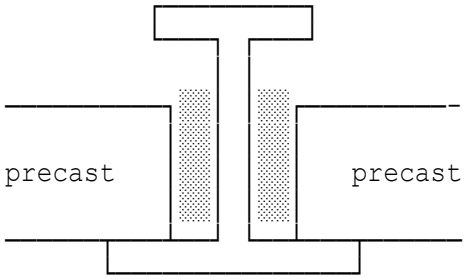

Non-composite case

Shading represents the filling required with this floor construction case.

Beam span	L1=7.5 m
Beam cross-centres	L2=7.5 m
Precast concrete units	wu=2.67 kN/m²
Self weight of steel	ws=0.24 kN/m²
Construction load	wc=0.5 kN/m²
Floor & minor services	wf=0.25 kN/m²
Ceiling	wci=0 kN/m²
Grout to beam (to half depth)	wg=0.15 kN/m²
Occupancy	wo=2.5 kN/m²
Partitions	wp=1 kN/m²
Variable load reduction	wr=0 kN/m²

Summary of steel section properties

Cross-sectional area	A=198 cm²
Depth of section	h=326 mm
Distance to centroid	ye'=189 mm
Distance to centroid	zbar=137 mm

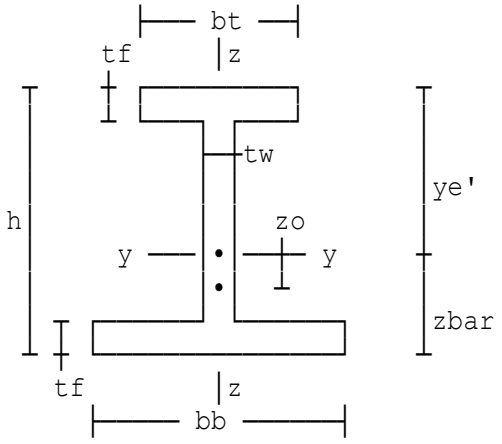

Dimension zo is the distance to shear centre from beam centroid.
bt = Top flange width
tf = Flange thickness
bb = Bottom flange width
tw = Web thickness
Axis y-y passes through the beam centroid.
zo is the distance to shear centre from the centroid of the beam.

	tw=16 mm
	tf=32 mm
	bt=179 mm
	bb=289 mm
Root radius	r=27 mm
ASB 2nd moment of area y-y axis	Iy=34514 cm⁴
ASB 2nd moment of area z-z axis	Iz=7989 cm⁴
Radius of gyration @ y-y axis	iy=13.2 cm
Radius of gyration @ z-z axis	iz=6.35 cm
Depth between beam flanges	hw=h-2*tf=262 mm
Distance to top flange centroid	ht=ye*10-tf/2=173 mm
Distance to bot.flange centroid	hb=h-ye'-tf/2=121 mm
2nd moment of area top flange	Iyt=tf*bt^3/12*1E-4=1529.4 cm⁴
2nd moment of area bottom flange	Iyb=tf*bb^3/12*1E-4=6436.7 cm⁴
Distance centroid to shear centre	zo=(hb*Iyb-ht*Iyt)/(Iyt+Iyb)=64.555 mm
Plastic section modulus y-y axis	Wply=2361 cm³
Plastic section modulus z-z axis	Wplz=949 cm³
Warping constant	Iw=1.07E6 cm⁶
Torsion constant	It=620 cm⁴
Precast units bearing length	publ=50 mm
Thickness of end plate	tep=10 mm
Diameter of bolts	db=24 mm
Total number of bolts to be used	bn=6
Weld size (leg length)	sw=12 mm

CONNECTION SUMMARY

All dimensions are in mm unless otherwise shown.

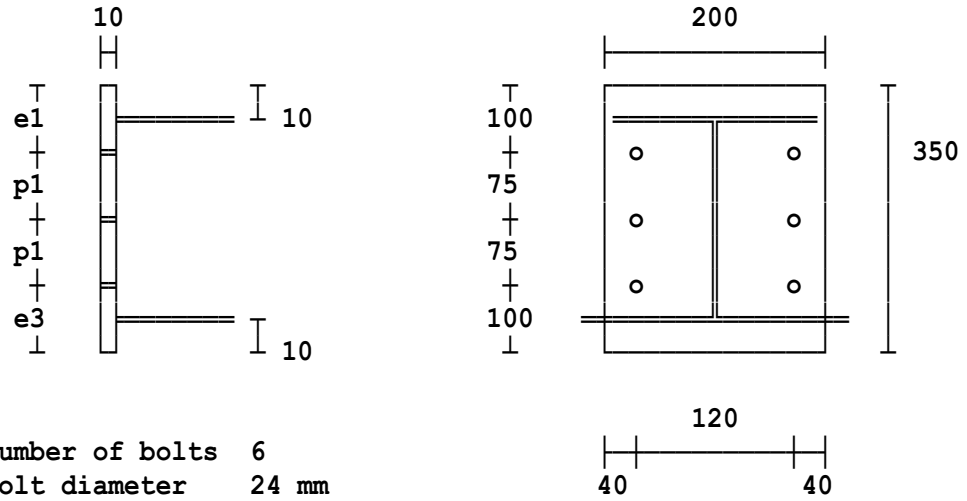

Number of bolts	**6**
Bolt diameter	**24 mm**
Bolt grade	**8.8**
Plate grade	**S 275**
Weld size	**12 mm**

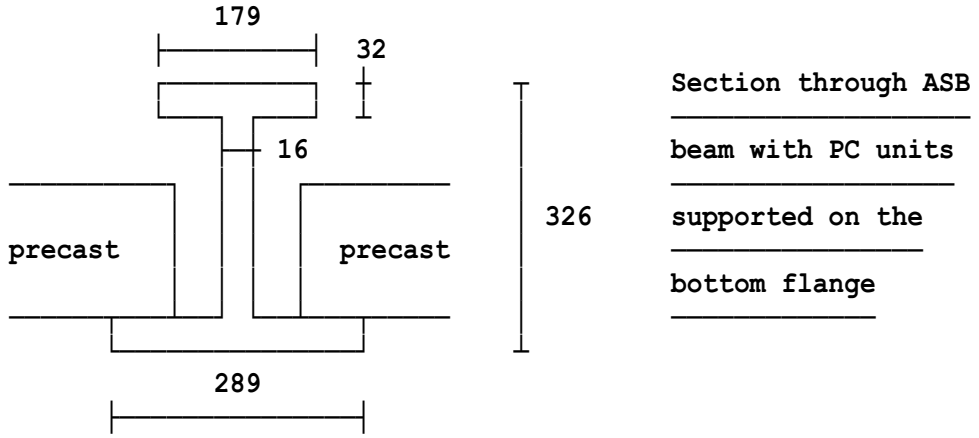

Asymmetric beam (ASB)	**300 ASB 155 Grade S 355**	
	Design strength	**345 N/mm²**
	Design shear force	**273.3 kN**
DESIGN	**Shear plastic resistance**	**1407 kN**
SUMMARY	**Design moment**	**512.5 kNm**
	Buckling resistance	**696.5 kNm**
	Variable load deflection	**14.92 mm**
	Limiting deflection	**20.83 mm**
	Interaction factors	**0.2181 ≤ 1**
		0.3475 ≤ 1
		0.2576 ≤ 1

NOTE: Use normal weight concrete (NWC) and provide reinforcement through holes in the beam web to tie the floor on each side of the beam together in order to meet robustness requirements. The use of T12 x 1200 long tie bars @ 600 c/c would normally suffice.

Location: Ex2 - Semi-composite ASB

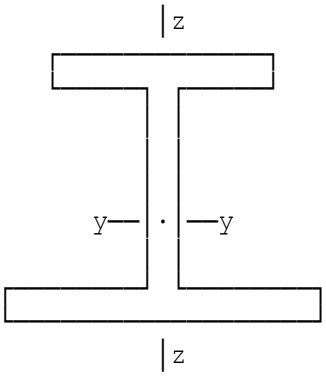

Simply supported beam

Slim floor construction non-composite asymmetric beam. Calculations are in accordance with EC3 Part 1-1 and SCI publication P385 entitled 'Design of Steel Beams in Torsion'.

Axis y-y passes through the asymmetric beam (ASB) centroid.

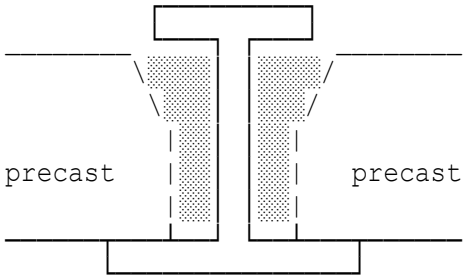

Semi-composite case

Shading represents the filling required with this floor construction case.

Beam span	L1=7.5 m
Beam cross-centres	L2=7.5 m
Precast concrete units	wu=2.67 kN/m²
Self weight of steel	ws=0.24 kN/m²
Construction load	wc=0.5 kN/m²
Floor & minor services	wf=0.25 kN/m²
Ceiling	wci=0 kN/m²
Beam encasement	wg=0.15 kN/m²
Occupancy	wo=2.5 kN/m²
Partitions	wp=1 kN/m²
Variable load reduction	wr=0 kN/m²

Summary of steel section properties

Cross-sectional area	A=195 cm²
Depth of section	h=310 mm
Distance to centroid	ye'=174 mm
Distance to centroid	zbar=136 mm

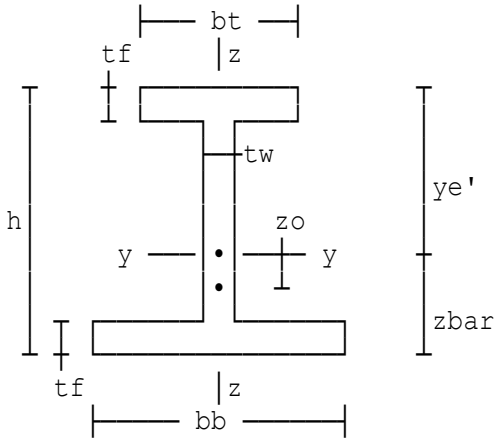

Dimension zo is the distance to shear centre from beam centroid.
bt = Top flange width
tf = Flange thickness
bb = Bottom flange width
tw = Web thickness
Axis y-y passes through the beam centroid.
zo is the distance to shear centre from the centroid of the beam.

tw	tw=27 mm
tf	tf=24 mm
bt	bt=190 mm
bb	bb=300 mm
Root radius	r=27 mm
ASB 2nd moment of area y-y axis	Iy=28398 cm⁴
ASB 2nd moment of area z-z axis	Iz=6840 cm⁴
Radius of gyration @ y-y axis	iy=12.1 cm
Radius of gyration @ z-z axis	iz=5.93 cm
Depth between beam flanges	hw=h-2*tf=262 mm
Distance to top flange centroid	ht=ye*10-tf/2=162 mm
Distance to bot.flange centroid	hb=h-ye'-tf/2=124 mm
2nd moment of area top flange	Iyt=tf*bt^3/12*1E-4=1371.8 cm⁴
2nd moment of area bottom flange	Iyb=tf*bb^3/12*1E-4=5400 cm⁴
Distance centroid to shear centre	zo=(hb*Iyb-ht*Iyt)/(Iyt+Iyb)=66.063 mm
Plastic section modulus y-y axis	Wply=2160 cm³
Plastic section modulus z-z axis	Wplz=816 cm³
Warping constant	Iw=895000 cm⁶
Torsion constant	It=513 cm⁴
Precast units bearing length	publ=50 mm
Thickness of end plate	tep=10 mm
Diameter of bolts	db=24 mm
Total number of bolts to be used	bn=4
Weld size (leg length)	sw=20 mm

CONNECTION SUMMARY

All dimensions are in mm unless otherwise shown.

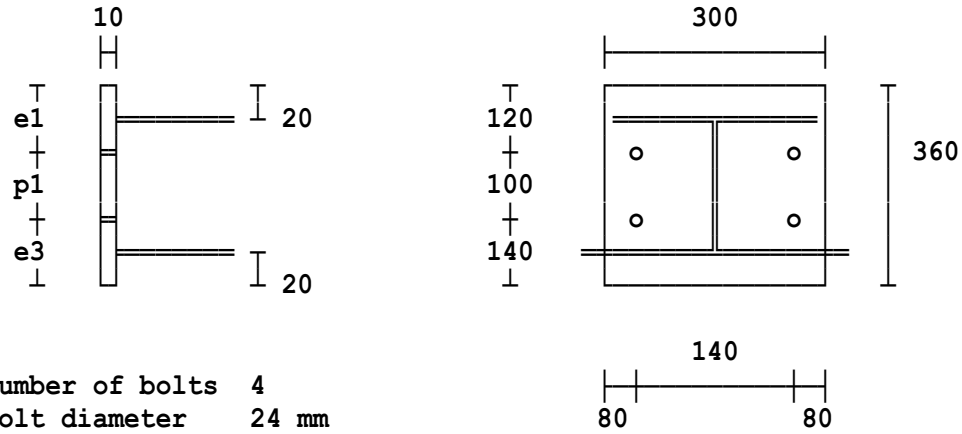

Number of bolts	**4**
Bolt diameter	**24 mm**
Bolt grade	**8.8**
Plate grade	**S 275**
Weld size	**20 mm**

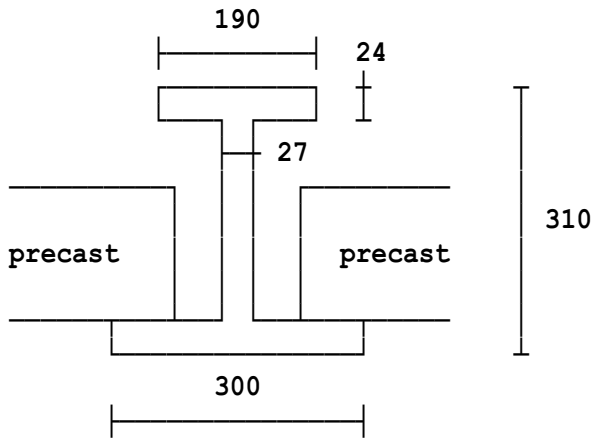

Section through ASB beam with PC units supported on the bottom flange

Asymmetric beam (ASB)	**300 ASB 153 Grade S 355**	
	Design strength	**345 N/mm²**
	Design shear force	**273.3 kN**
DESIGN	**Shear plastic resistance**	**1929 kN**
SUMMARY	**Design moment**	**512.5 kNm**
	Buckling resistance	**591 kNm**
	Variable load deflection	**16.25 mm**
	Limiting deflection	**20.83 mm**
	Interaction factors	**0.261 ≤ 1**
		0.4107 ≤ 1

NOTE: Use normal weight concrete (NWC) and provide reinforcement through holes in the beam web to tie the floor on each side of the beam together in order to meet robustness requirements. The use of T12 x 1200 long tie bars @ 600 c/c would normally suffice.

Location: Ex3 - This is Example 2 in SCI publication P342

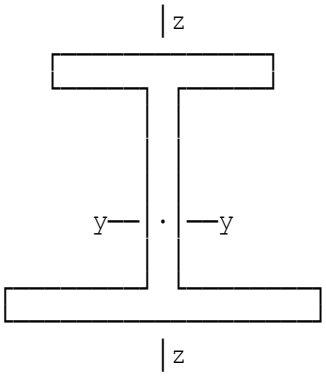

Simply supported beam

Slim floor construction non-composite asymmetric beam. Calculations are in accordance with EC3 Part 1-1 and SCI publication P385 entitled 'Design of Steel Beams in Torsion'.

Axis y-y passes through the asymmetric beam (ASB) centroid.

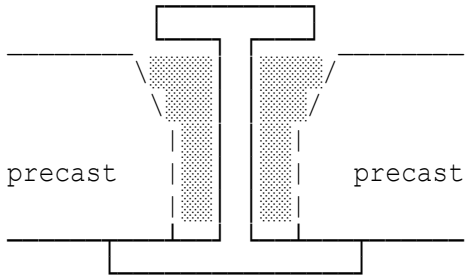

Semi-composite case

Shading represents the filling required with this floor construction case.

Beam span	L1=6.7 m
Beam cross-centres	L2=7.5 m
Precast concrete units	wu=3.3 kN/m²
Self weight of steel	ws=0.2 kN/m²
Construction load	wc=0.5 kN/m²
Floor & minor services	wf=1.23 kN/m²
Ceiling	wci=0.1 kN/m²
Beam encasement	wg=0 kN/m²
Occupancy	wo=4 kN/m²
Partitions	wp=1 kN/m²
Variable load reduction	wr=0 kN/m²

Summary of steel section properties

Cross-sectional area	A=195 cm²
Depth of section	h=310 mm
Distance to centroid	ye'=174 mm
Distance to centroid	zbar=136 mm

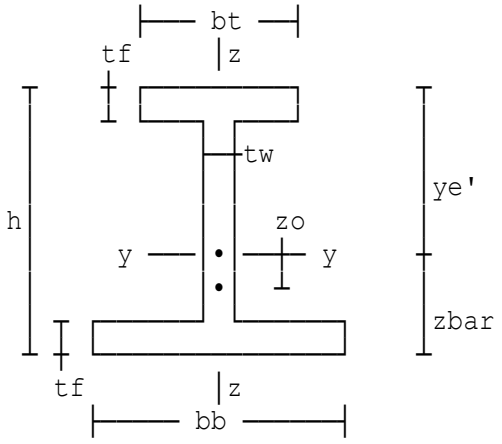

Dimension zo is the distance to shear centre from beam centroid.
bt = Top flange width
tf = Flange thickness
bb = Bottom flange width
tw = Web thickness
Axis y-y passes through the beam centroid.
zo is the distance to shear centre from the centroid of the beam.

tw=27 mm	
tf=24 mm	
bt=190 mm	
bb=300 mm	
Root radius	r=27 mm
ASB 2nd moment of area y-y axis	Iy=28398 cm⁴
ASB 2nd moment of area z-z axis	Iz=6840 cm⁴
Radius of gyration @ y-y axis	iy=12.1 cm
Radius of gyration @ z-z axis	iz=5.93 cm
Depth between beam flanges	hw=h-2*tf=262 mm
Distance to top flange centroid	ht=ye*10-tf/2=162 mm
Distance to bot.flange centroid	hb=h-ye'-tf/2=124 mm
2nd moment of area top flange	Iyt=tf*bt^3/12*1E-4=1371.8 cm⁴
2nd moment of area bottom flange	Iyb=tf*bb^3/12*1E-4=5400 cm⁴
Distance centroid to shear centre	zo=(hb*Iyb-ht*Iyt)/(Iyt+Iyb)=66.063 mm
Plastic section modulus y-y axis	Wply=2160 cm³
Plastic section modulus z-z axis	Wplz=816 cm³
Warping constant	Iw=895000 cm⁶
Torsion constant	It=513 cm⁴
Precast units bearing length	publ=50 mm
Thickness of end plate	tep=10 mm
Diameter of bolts	db=24 mm
Total number of bolts to be used	bn=6
Weld size (leg length)	sw=20 mm

CONNECTION SUMMARY

All dimensions are in mm unless otherwise shown.

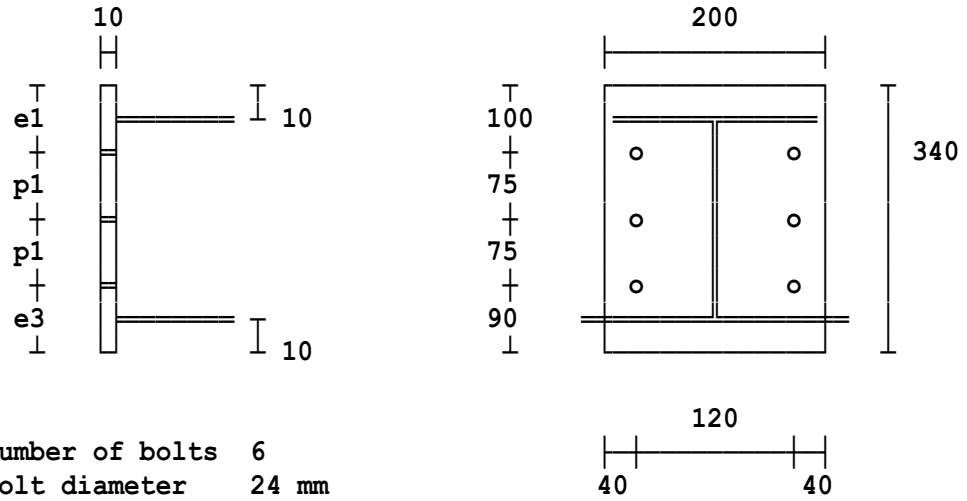

Number of bolts	**6**
Bolt diameter	**24 mm**
Bolt grade	**8.8**
Plate grade	**S 275**
Weld size	**20 mm**

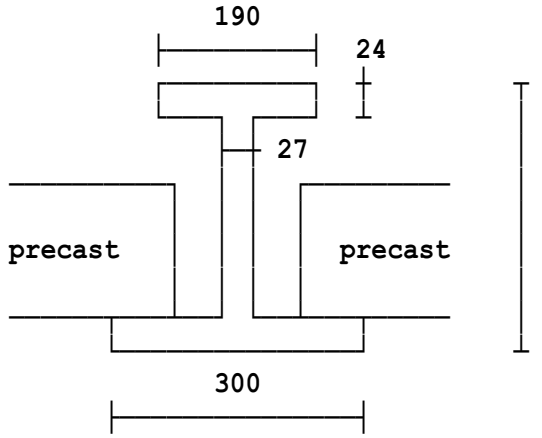

Section through ASB beam with PC units supported on the bottom flange

Asymmetric beam (ASB)	**300 ASB 153 Grade S 355**	
	Design strength	**345 N/mm²**
	Design shear force	**352.3 kN**
DESIGN	**Shear plastic resistance**	**1929 kN**
SUMMARY	**Design moment**	**590 kNm**
	Buckling resistance	**607.3 kNm**
	Variable load deflection	**14.78 mm**
	Limiting deflection	**18.61 mm**
	Interaction factors	**0.2396 ≤ 1**
		0.3607 ≤ 1

NOTE: Use normal weight concrete (NWC) and provide reinforcement through holes in the beam web to tie the floor on each side of the beam together in order to meet robustness requirements. The use of T12 x 1200 long tie bars @ 600 c/c would normally suffice.

Location: Ex4 this is Example 3 in P385

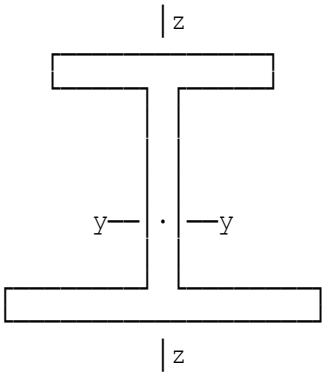

Simply supported beam

Slim floor construction non-composite asymmetric beam. Calculations are in accordance with EC3 Part 1-1 and SCI publication P385 entitled 'Design of Steel Beams in Torsion'.

Axis y-y passes through the asymmetric beam (ASB) centroid.

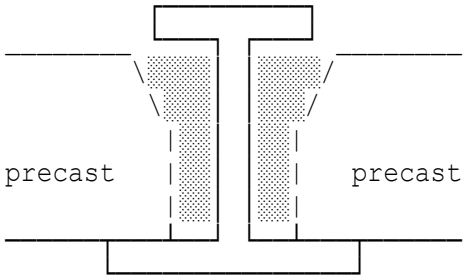

Semi-composite case

Shading represents the filling required with this floor construction case.

Beam span	L1=7.5 m
Beam cross-centres	L2=7.5 m
Precast concrete units	wu=3.4 kN/m²
Self weight of steel	ws=0.2 kN/m²
Construction load	wc=2 kN/m²
Floor & minor services	wf=0 kN/m²
Ceiling	wci=0 kN/m²
Beam encasement	wg=0 kN/m²
Occupancy	wo=2 kN/m²
Partitions	wp=0 kN/m²
Variable load reduction	wr=0 kN/m²

Summary of steel section properties

Cross-sectional area	A=195 cm²
Depth of section	h=310 mm
Distance to centroid	ye'=174 mm
Distance to centroid	zbar=136 mm

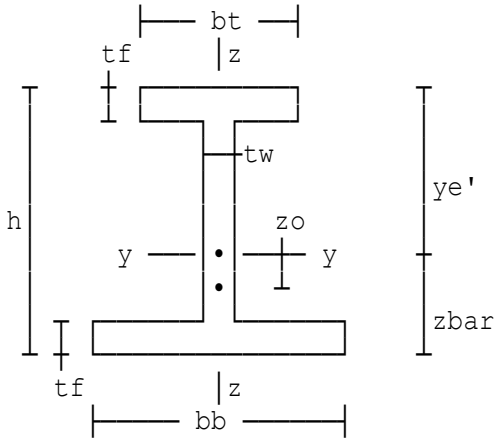

Dimension zo is the distance to shear centre from beam centroid.
bt = Top flange width
tf = Flange thickness
bb = Bottom flange width
tw = Web thickness
Axis y-y passes through the beam centroid.
zo is the distance to shear centre from the centroid of the beam.

tw	tw=27 mm
tf	tf=24 mm
bt	bt=190 mm
bb	bb=300 mm
Root radius	r=27 mm
ASB 2nd moment of area y-y axis	Iy=28398 cm⁴
ASB 2nd moment of area z-z axis	Iz=6840 cm⁴
Radius of gyration @ y-y axis	iy=12.1 cm
Radius of gyration @ z-z axis	iz=5.93 cm
Depth between beam flanges	hw=h-2*tf=262 mm
Distance to top flange centroid	ht=ye*10-tf/2=162 mm
Distance to bot.flange centroid	hb=h-ye'-tf/2=124 mm
2nd moment of area top flange	Iyt=tf*bt^3/12*1E-4=1371.8 cm⁴
2nd moment of area bottom flange	Iyb=tf*bb^3/12*1E-4=5400 cm⁴
Distance centroid to shear centre	zo=(hb*Iyb-ht*Iyt)/(Iyt+Iyb)=66.063 mm
Plastic section modulus y-y axis	Wply=2160 cm³
Plastic section modulus z-z axis	Wplz=816 cm³
Warping constant	Iw=895000 cm⁶
Torsion constant	It=513 cm⁴
Precast units bearing length	publ=50 mm
Thickness of end plate	tep=10 mm
Diameter of bolts	db=24 mm
Total number of bolts to be used	bn=6
Weld size (leg length)	sw=20 mm

CONNECTION SUMMARY

All dimensions are in mm unless otherwise shown.

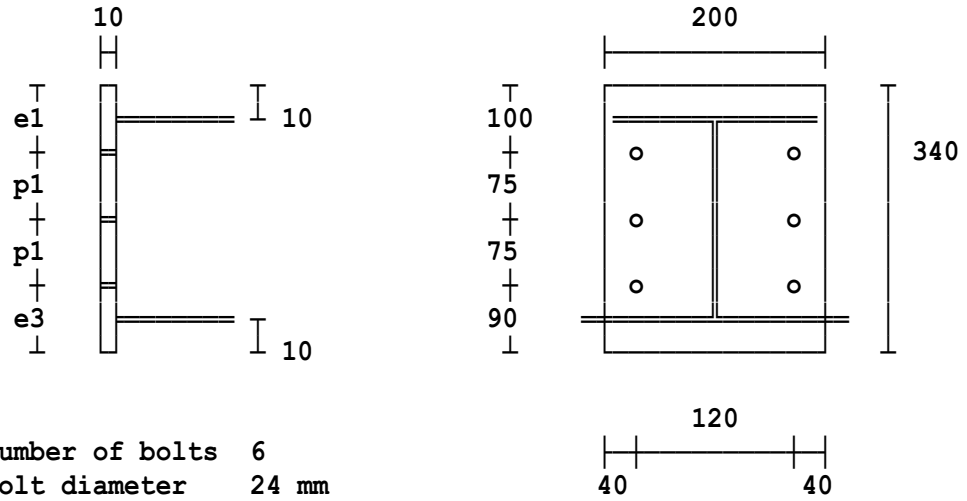

Number of bolts	**6**
Bolt diameter	**24 mm**
Bolt grade	**8.8**
Plate grade	**S 275**
Weld size	**20 mm**

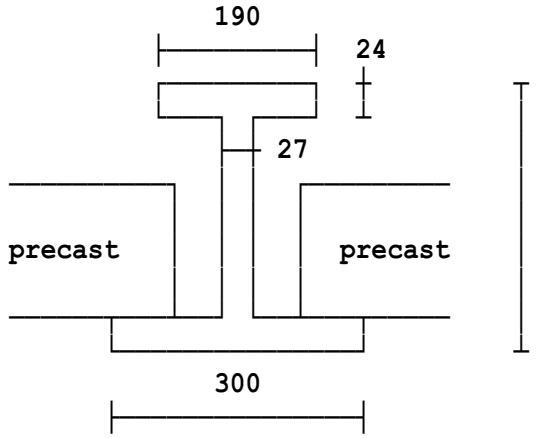

Section through ASB beam with PC units supported on the bottom flange

Asymmetric beam (ASB)	**300 ASB 153 Grade S 355**	
	Design strength	**345 N/mm²**
	Design shear force	**221.1 kN**
DESIGN	**Shear plastic resistance**	**1929 kN**
SUMMARY	**Design moment**	**414.5 kNm**
	Buckling resistance	**591 kNm**
	Variable load deflection	**9.285 mm**
	Limiting deflection	**20.83 mm**
	Interaction factors	**0.4451 ≤ 1**
		0.6101 ≤ 1

NOTE: Use normal weight concrete (NWC) and provide reinforcement through holes in the beam web to tie the floor on each side of the beam together in order to meet robustness requirements. The use of T12 x 1200 long tie bars @ 600 c/c would normally suffice.

Location: Ex1 from 'Slim Floor Construction Using Deep Decking'

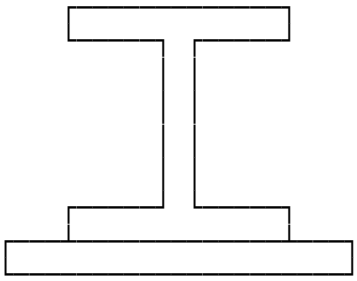

Simply supported beam

Slim floor construction non-composite beam. Calculations are in accordance with BS5950 and SCI publication entitled 'Slim Floor Construction Using Deep Decking'.

Beam span	L1=7.5 m
Beam cross-centres	L2=7.5 m
254 x 254 x 107 UC.	
Young's modulus	E=205 kN/mm²
Thickness of plate	Tp=15 mm
Width of plate	Bp=460 mm
Concrete Grade	fcu=30 N/mm²
Air dry density for concrete	Dc=18 kN/m³
Wet density for concrete	D'c=19 kN/m³
Slab depth	Ds=300 mm
Depth of profiling	Dp=285 mm
Centres of profiles	Ct=600 mm
Width at inside of profile	b=548 mm
Width at outside of profile	p=424 mm
Deck and end closures	wg=0.2 kN/m²
Construction load	wc=0.5 kN/m²
Floor & minor services	wf=0.25 kN/m²
Ceiling	wci=0 kN/m²
Occupancy	wo=3.5 kN/m²
Partitions	wp=1 kN/m²
Weld leg length	s=8 mm
Thickness of end plate	tp=10 mm
Grade of steel	pgrade=355
Total number of bolts to be used	bn=6
Distance to first row of bolts	a1=80 mm
Edge distance	a2=15 mm
Pitch of bolts	a3=70 mm
Bolt cross-centres	g=140 mm
Width of end plate	Bep=250 mm

CONNECTION SUMMARY

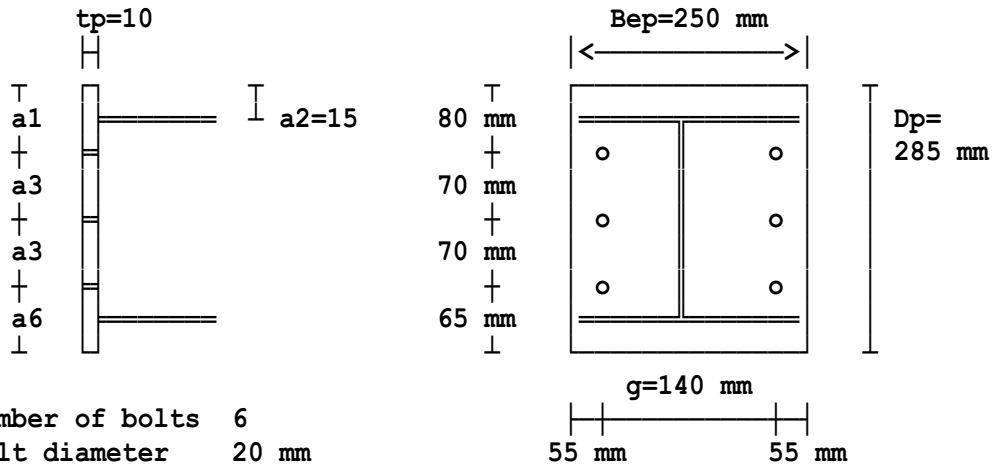

Number of bolts	6
Bolt diameter	20 mm
Bolt grade	8.8
Plate grade	S 355

UNIVERSAL COLUMN	254 x 254 x 107 UC Grade S 355	
	Design strength	345 N/mm²
BOTTOM PLATE	460 mm x 15 mm Grade S 355	
	Design strength	355 N/mm²
	Design shear force	268 kN
DESIGN	Shear capacity	706.6 kN
SUMMARY	Design moment	502.6 kNm
	Moment capacity	625.8 kNm
	Buckling check	0.2103 ≤ 1
	Imposed load deflection	20.88 mm
	Deflection to span ratio	1: 359
	Total deflection	31.55 mm
	Deflection to span ratio	1: 237

NOTE: Use lightweight aggregate concrete (LWC) and provide top reinforcement to tie the floor on each side of the beam together in order to meet robustness requirements.

Location: Ex1 from 'Slim Floor Construction Using Deep Decking'

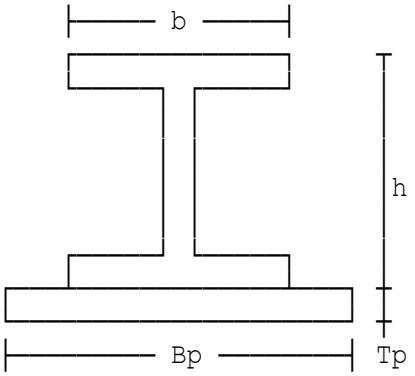

Simply supported beam

Slim floor construction non-composite beam. Calculations are in accordance with EC3 Part 1-1 & SCI P385 entitled 'Design of Steel Beams in Torsion'.

A plate is welded to the bottom flange of the UC section extending beyond the bottom flange by 100 mm either side to support the metal decking.

Beam span	L1=7.5 m
Beam cross-centres	L2=7.5 m
254 x 254 x 107 UKC	
Thickness of plate	Tp=15 mm
Width of plate	Bp=460 mm
Concrete density (const.stage)	D'c=19 kN/m³
Concrete density (final stage)	Dc=18 kN/m³
Slab depth	Ds=300 mm
Depth of profiling	Dp=285 mm
Centres of profiles	Ct=600 mm
Width at inside of profile	wip=548 mm
Width at outside of profile	wop=424 mm
Deck and end closures	wg=0.2 kN/m²
Construction load	wc=0.5 kN/m²
Floor & minor services	wf=0.25 kN/m²
Ceiling	wci=0 kN/m²
Occupancy	wo=3.5 kN/m²
Partitions	wp=1 kN/m²
Weld size (leg length)	s=8 mm
Total number of bolts to be used	bn=4
Distance from top edge of plate	e4=10 mm
Distance to first row of bolts	e1=100 mm
Pitch of bolts vertically	p1=80 mm
Bolt cross-centres	p3=140 mm
Width of end plate	bep=250 mm

Weld strength between beam and end plate

Load on weld FwEdw=W33/(4*(hep-2*e4))=0.46914 kN/mm
Weld size (leg length) sw=10 mm
Since FwEdw ≤ FwRdw (0.46914 kN/mm ≤ 1.6884 kN/mm), the 10 mm fillet weld is satisfactory.

CONNECTION SUMMARY

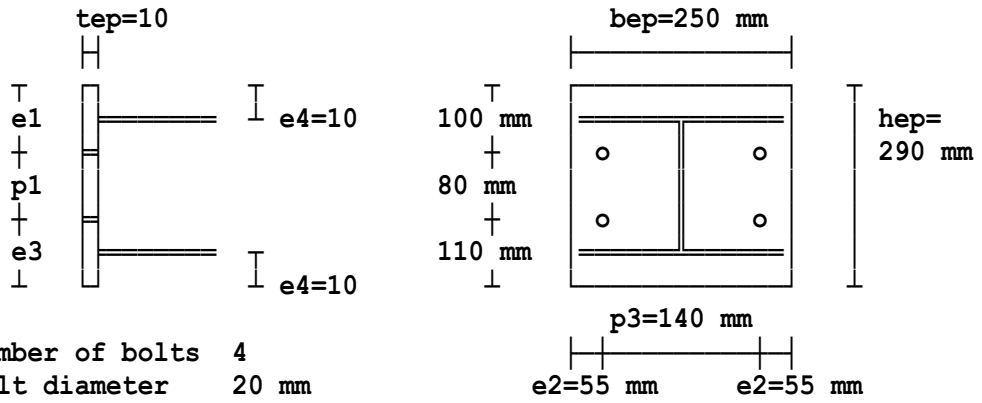

Number of bolts	**4**
Bolt diameter	**20 mm**
Bolt grade	**8.8**
Plate grade	**S 355**

UNIVERSAL COLUMN	**254 x 254 x 107 UKC Grade**	**S 355**
	Design strength	**345 N/mm²**
BOTTOM PLATE	**460 mm x 15 mm Grade**	**S 355**
	Design strength of plate	**355 N/mm²**
	Design shear force	**253.3 kN**
DESIGN	**Shear plastic resistance**	**751.4 kN**
SUMMARY	**Design moment**	**475 kNm**
	Moment resistance	**625.8 kNm**
	Buckling resistance	**470.2 kNm**
	Variable load deflection	**20.38 mm**
	Deflection to span ratio	**1: 367**
	Total deflection	**30.8 mm**
	Deflection to span ratio	**1: 243**
	Interaction factors	**0.1645 ≤ 1**

NOTE: Use lightweight aggregate concrete (LWAC) and provide top reinforcement to tie the floor on each side of the beam together in order to meet robustness requirements.

Location: User defined section

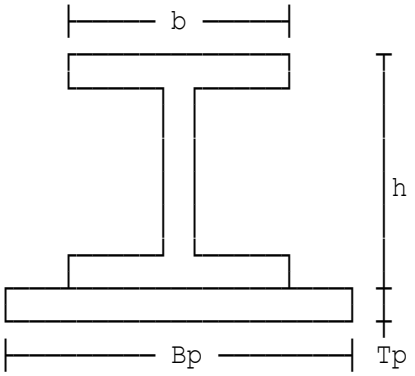

Simply supported beam

Slim floor construction non-composite beam. Calculations are in accordance with EC3 Part 1-1 & SCI P385 entitled 'Design of Steel Beams in Torsion'.

A plate is welded to the bottom flange of the UC section extending beyond the bottom flange by 100 mm either side to support the metal decking.

Beam span	L1=7.5 m
Beam cross-centres	L2=7.5 m
Thickness of plate	Tp=15 mm
Width of plate	Bp=460 mm
Concrete density (const.stage)	D'c=19 kN/m³
Concrete density (final stage)	Dc=18 kN/m³
Slab depth	Ds=300 mm
Depth of profiling	Dp=285 mm
Centres of profiles	Ct=600 mm
Width at inside of profile	wip=548 mm
Width at outside of profile	wop=424 mm
Deck and end closures	wg=0.2 kN/m²
Construction load	wc=0.5 kN/m²
Floor & minor services	wf=0.25 kN/m²
Ceiling	wci=0 kN/m²
Occupancy	wo=3.5 kN/m²
Partitions	wp=1 kN/m²
Weld size (leg length)	s=8 mm
Total number of bolts to be used	bn=4
Distance from top edge of plate	e4=10 mm
Distance to first row of bolts	e1=100 mm
Pitch of bolts vertically	p1=100 mm
Bolt cross-centres	p3=140 mm
Width of end plate	bep=250 mm

Weld strength between beam and end plate

Load on weld	FwEdw=W33/(4*(hep-2*e4))=0.46914 kN/mm
Weld size (leg length)	sw=10 mm

Since FwEdw ≤ FwRdw (0.46914 kN/mm ≤ 1.6884 kN/mm), the 10 mm fillet weld is satisfactory.

CONNECTION SUMMARY

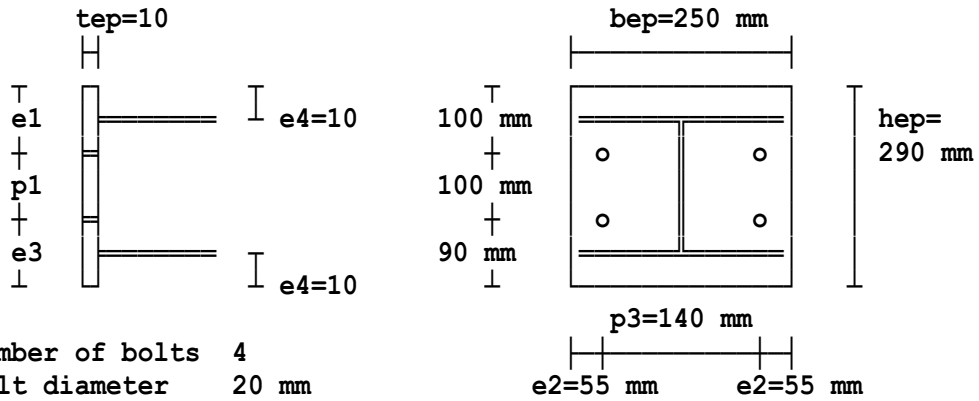

Number of bolts	4
Bolt diameter	20 mm
Bolt grade	8.8
Plate grade	S 355

UNIVERSAL COLUMN	266.7 x 258.8 x 107 UC Grade S 355	
	Design strength	345 N/mm²
BOTTOM PLATE	460 mm x 15 mm Grade S 355	
	Design strength of plate	355 N/mm²
	Design shear force	253.3 kN
DESIGN	Shear plastic resistance	759 kN
SUMMARY	Design moment	475 kNm
	Moment resistance	625.8 kNm
	Buckling resistance	469.9 kNm
	Variable load deflection	20.37 mm
	Deflection to span ratio	1: 368
	Total deflection	30.78 mm
	Deflection to span ratio	1: 243
	Interaction factors	0.1658 ≤ 1

NOTE: Use lightweight aggregate concrete (LWAC) and provide top reinforcement to tie the floor on each side of the beam together in order to meet robustness requirements.

Location: Ex1 from 'Slim Floor Construction Using Deep Decking'

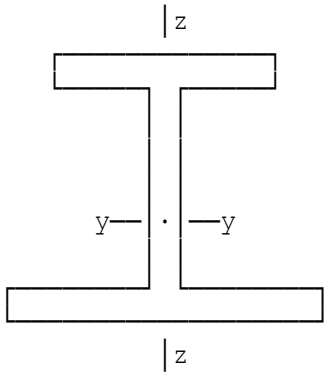

Simply supported beam

Slim floor construction non-composite asymmetric beam. Calculations are in accordance with EC3 Part 1-1 and SCI publication P385 entitled 'Design of Steel Beams in Torsion'.

Axis y-y passes through the asymmetric beam (ASB) centroid.

Beam span	L1=7.5 m
Beam cross-centres	L2=7.5 m

Summary of steel section properties

Cross-sectional area	A=195 cm²
Depth of section	h=310 mm
Distance to centroid	ye'=174 mm
Distance to centroid	zbar=136 mm

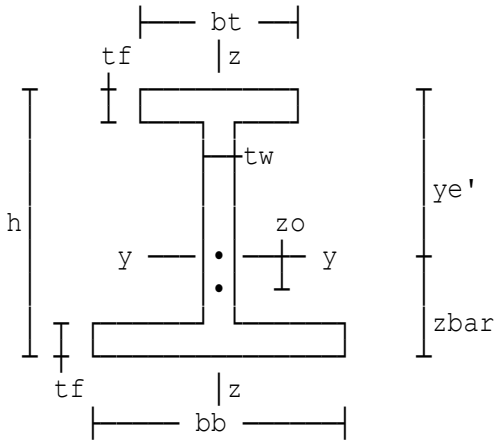

Dimension zo is the distance to shear centre from beam centroid.
bt = Top flange width
tf = Flange thickness
bb = Bottom flange width
tw = Web thickness
Axis y-y passes through the beam centroid.
zo is the distance to shear centre from the centroid of the beam.

tw	tw=27 mm
tf	tf=24 mm
bt	bt=190 mm
bb	bb=300 mm
Root radius	r=27 mm
ASB 2nd moment of area y-y axis	Iy=28398 cm⁴
ASB 2nd moment of area z-z axis	Iz=6840 cm⁴
Radius of gyration @ y-y axis	iy=12.1 cm
Radius of gyration @ z-z axis	iz=5.93 cm
Depth between beam flanges	hw=h-2*tf=262 mm
Distance to top flange centroid	ht=ye*10-tf/2=162 mm
Distance to bot.flange centroid	hb=h-ye'-tf/2=124 mm
2nd moment of area top flange	Iyt=tf*bt^3/12*1E-4=1371.8 cm⁴
2nd moment of area bottom flange	Iyb=tf*bb^3/12*1E-4=5400 cm⁴
Distance centroid to shear centre	zo=(hb*Iyb-ht*Iyt)/(Iyt+Iyb)=66.063 mm
Plastic section modulus y-y axis	Wply=2160 cm³
Plastic section modulus z-z axis	Wplz=816 cm³
Warping constant	Iw=895000 cm⁶
Torsion constant	It=513 cm⁴

Concrete density (const.stage)	D'c=19 kN/m³
Concrete density (final stage)	Dc=18 kN/m³
Slab depth	Ds=300 mm
Depth of profiling	Dp=285 mm
Centres of profiles	Ct=600 mm
Width at inside of profile	wip=548 mm
Width at outside of profile	wop=424 mm
Deck and end closures	wg=0.2 kN/m²
Construction load	wc=0.5 kN/m²
Floor & minor services	wf=0.25 kN/m²
Ceiling	wci=0 kN/m²
Occupancy	wo=3.5 kN/m²
Partitions	wp=1 kN/m²
Variable load reduction	wr=0 kN/m²
Metal Decking bearing length	mdbl=75 mm
Thickness of end plate	tep=10 mm
Diameter of bolts	db=20 mm
Total number of bolts to be used	bn=4
Distance from top edge of plate	e4=10 mm
Distance to first row of bolts	e1=100 mm
Pitch of bolts vertically	p1=80 mm
Bolt cross-centres	p3=120 mm
Width of end plate	bep=200 mm

Weld strength between beam and end plate

Load on weld	FwEdw=W33/(4*(hep-2*e4))=0.39689 kN/mm
Weld size (leg length)	sw=20 mm

Since FwEdw ≤ FwRdw (0.39689 kN/mm ≤ 3.3769 kN/mm), the 20 mm fillet weld is satisfactory.

CONNECTION SUMMARY

All dimensions are in mm unless otherwise shown.

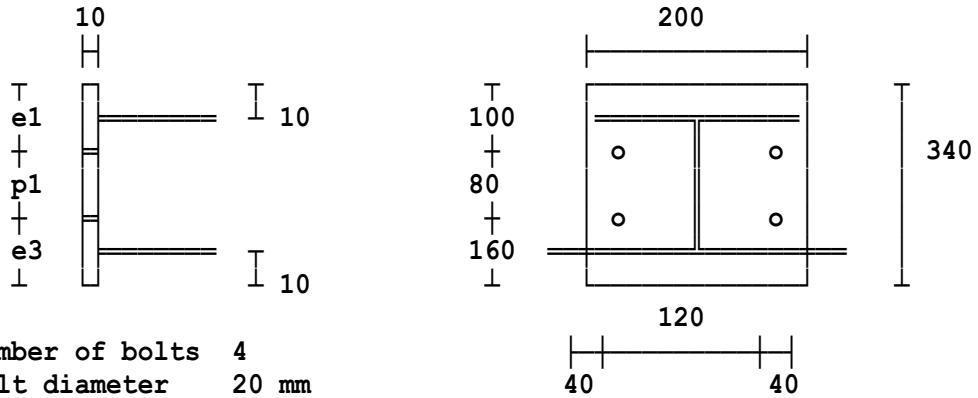

Number of bolts	**4**
Bolt diameter	**20 mm**
Bolt grade	**8.8**
Plate grade	**S 355**
Weld size	**20 mm**

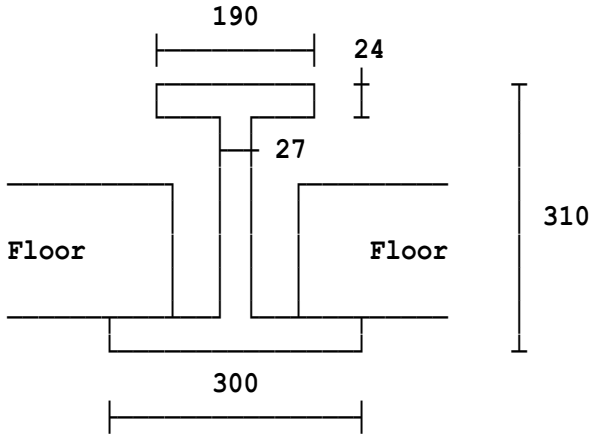

Section through ASB beam with metal decking supported on bottom flange

Asymmetric beam (ASB)	**300 ASB 153 Grade S 355**	
	Design strength	**345 N/mm²**
	Design shear force	**254 kN**
DESIGN	**Shear plastic resistance**	**1929 kN**
SUMMARY	**Design moment**	**476.3 kNm**
	Moment resistance	**745.2 kNm**
	Buckling resistance	**591 kNm**
	Variable load deflection	**21.58 mm**
	Deflection to span ratio	**1: 347**
	Total deflection	**30.31 mm**
	Deflection to span ratio	**1: 247**
	Interaction factors	**0.0752 ≤ 1**

NOTE: Use lightweight aggregate concrete (LWAC) and provide top reinforcement to tie the floor on each side of the beam together in order to meet robustness requirements.

Location: User defined section

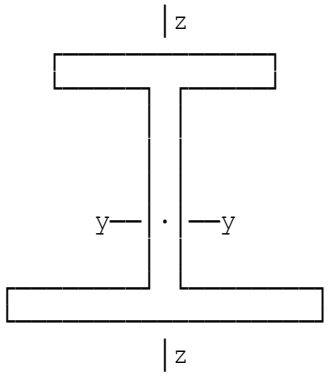

Simply supported beam

Slim floor construction non-composite asymmetric beam. Calculations are in accordance with EC3 Part 1-1 and SCI publication P385 entitled 'Design of Steel Beams in Torsion'.

Axis y-y passes through the asymmetric beam (ASB) centroid.

Beam span	L1=7.5 m
Beam cross-centres	L2=7.5 m

Summary of steel section properties

Cross-sectional area	A=195 cm²
Depth of section	h=310 mm
Distance to centroid	ye'=174 mm
Distance to centroid	zbar=136 mm

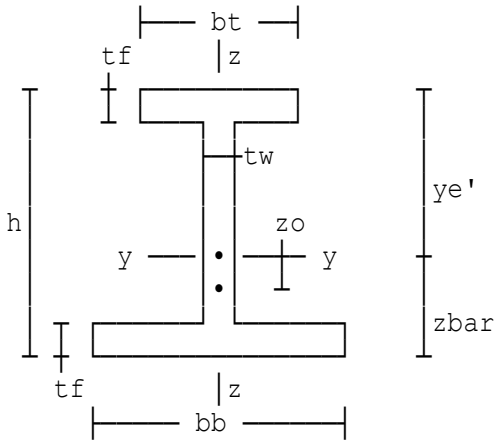

Dimension zo is the distance to shear centre from beam centroid.
bt = Top flange width
tf = Flange thickness
bb = Bottom flange width
tw = Web thickness
Axis y-y passes through the beam centroid.
zo is the distance to shear centre from the centroid of the beam.

tw	tw=27 mm
tf	tf=24 mm
bt	bt=190 mm
bb	bb=300 mm
Root radius	r=27 mm
ASB 2nd moment of area y-y axis	Iy=28398 cm⁴
ASB 2nd moment of area z-z axis	Iz=6840 cm⁴
Radius of gyration @ y-y axis	iy=12.1 cm
Radius of gyration @ z-z axis	iz=5.93 cm
Depth between beam flanges	hw=h-2*tf=262 mm
Distance to top flange centroid	ht=ye*10-tf/2=162 mm
Distance to bot.flange centroid	hb=h-ye'-tf/2=124 mm
2nd moment of area top flange	Iyt=tf*bt^3/12*1E-4=1371.8 cm⁴
2nd moment of area bottom flange	Iyb=tf*bb^3/12*1E-4=5400 cm⁴
Distance centroid to shear centre	zo=(hb*Iyb-ht*Iyt)/(Iyt+Iyb)=66.063 mm
Plastic section modulus y-y axis	Wply=2160 cm³
Plastic section modulus z-z axis	Wplz=816 cm³
Warping constant	Iw=895000 cm⁶
Torsion constant	It=513 cm⁴

Concrete density (const.stage)	D'c=19 kN/m³
Concrete density (final stage)	Dc=18 kN/m³
Slab depth	Ds=300 mm
Depth of profiling	Dp=285 mm
Centres of profiles	Ct=600 mm
Width at inside of profile	wip=548 mm
Width at outside of profile	wop=424 mm
Deck and end closures	wg=0.2 kN/m²
Construction load	wc=0.5 kN/m²
Floor & minor services	wf=0.25 kN/m²
Ceiling	wci=0 kN/m²
Occupancy	wo=3.5 kN/m²
Partitions	wp=1 kN/m²
Variable load reduction	wr=0 kN/m²
Metal Decking bearing length	mdbl=75 mm
Thickness of end plate	tep=10 mm
Diameter of bolts	db=20 mm
Total number of bolts to be used	bn=4
Distance from top edge of plate	e4=10 mm
Distance to first row of bolts	e1=100 mm
Pitch of bolts vertically	p1=100 mm
Bolt cross-centres	p3=140 mm
Width of end plate	bep=250 mm

Weld strength between beam and end plate

Load on weld	FwEdw=W33/(4*(hep-2*e4))=0.4046 kN/mm
Weld size (leg length)	sw=20 mm

Since FwEdw ≤ FwRdw (0.4046 kN/mm ≤ 3.3769 kN/mm), the 20 mm fillet weld is satisfactory.

CONNECTION SUMMARY

All dimensions are in mm unless otherwise shown.

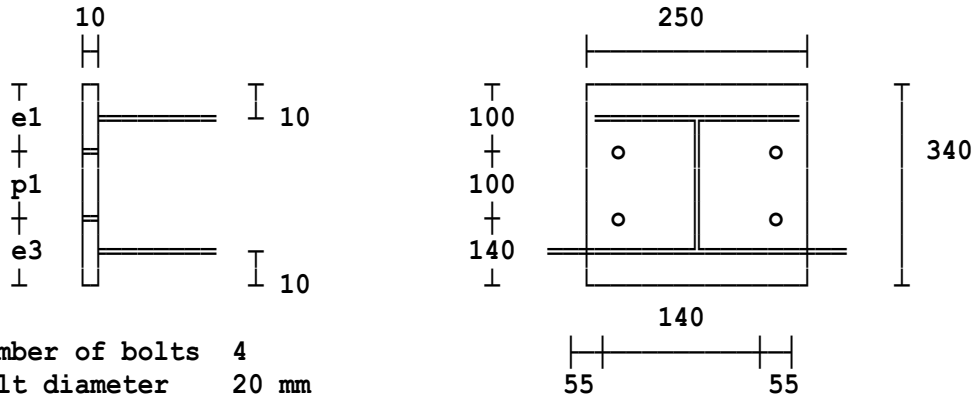

Number of bolts	**4**
Bolt diameter	**20 mm**
Bolt grade	**8.8**
Plate grade	**S 355**
Weld size	**20 mm**

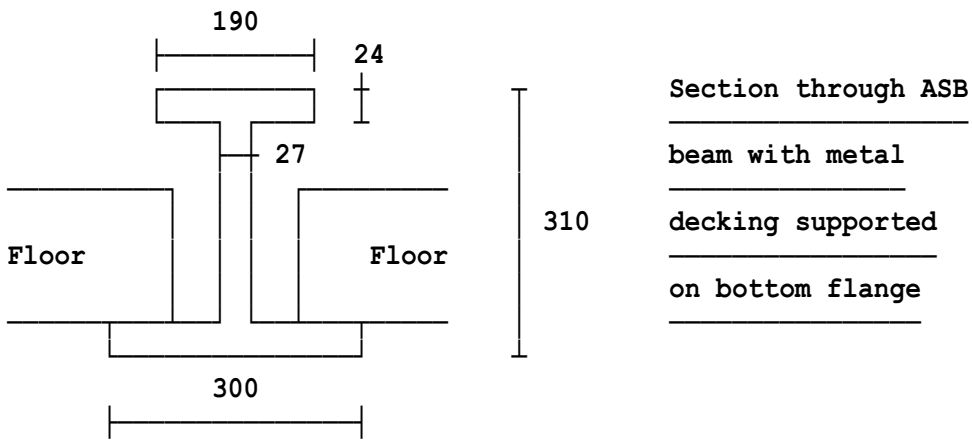

Asymmetric beam (ASB)	**300 ASB 153 Grade S 355**	
	Design strength	**345 N/mm²**
	Design shear force	**258.9 kN**
DESIGN	**Shear plastic resistance**	**1929 kN**
SUMMARY	**Design moment**	**485.5 kNm**
	Moment resistance	**745.2 kNm**
	Buckling resistance	**591 kNm**
	Variable load deflection	**21.58 mm**
	Deflection to span ratio	**1: 347**
	Total deflection	**30.98 mm**
	Deflection to span ratio	**1: 242**
	Interaction factors	**0.0912 ≤ 1**

NOTE: Use lightweight aggregate concrete (LWAC) and provide top reinforcement to tie the floor on each side of the beam together in order to meet robustness requirements.

Location: Ex3 With 30mm cover to top flange

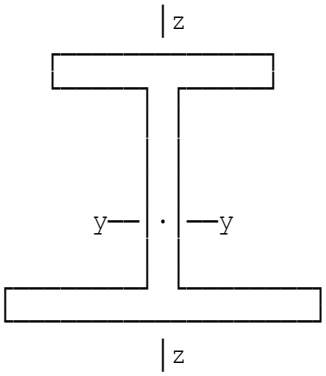

Simply supported beam

Slim floor construction non-composite asymmetric beam. Calculations are in accordance with EC3 Part 1-1 and SCI publication P385 entitled 'Design of Steel Beams in Torsion'.

Axis y-y passes through the asymmetric beam (ASB) centroid.

Beam span	L1=6.7 m
Beam cross-centres	L2=7.5 m

Summary of steel section properties

Cross-sectional area	A=195 cm²
Depth of section	h=310 mm
Distance to centroid	ye'=174 mm
Distance to centroid	zbar=136 mm

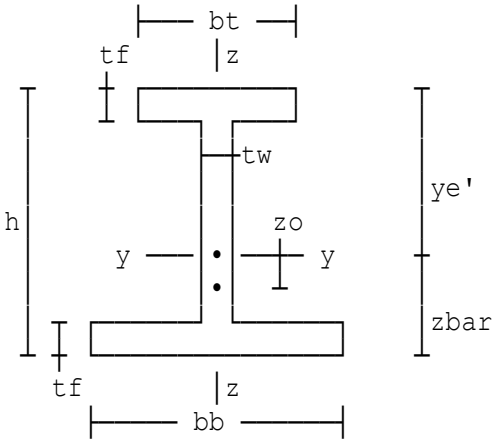

Dimension zo is the distance to shear centre from beam centroid.
bt = Top flange width
tf = Flange thickness
bb = Bottom flange width
tw = Web thickness
Axis y-y passes through the beam centroid.
zo is the distance to shear centre from the centroid of the beam.

tw	tw=27 mm
tf	tf=24 mm
bt	bt=190 mm
bb	bb=300 mm
Root radius	r=27 mm
ASB 2nd moment of area y-y axis	Iy=28398 cm⁴
ASB 2nd moment of area z-z axis	Iz=6840 cm⁴
Radius of gyration @ y-y axis	iy=12.1 cm
Radius of gyration @ z-z axis	iz=5.93 cm
Depth between beam flanges	hw=h-2*tf=262 mm
Distance to top flange centroid	ht=ye*10-tf/2=162 mm
Distance to bot.flange centroid	hb=h-ye'-tf/2=124 mm
2nd moment of area top flange	Iyt=tf*bt^3/12*1E-4=1371.8 cm⁴
2nd moment of area bottom flange	Iyb=tf*bb^3/12*1E-4=5400 cm⁴
Distance centroid to shear centre	zo=(hb*Iyb-ht*Iyt)/(Iyt+Iyb)=66.063 mm
Plastic section modulus y-y axis	Wply=2160 cm³
Plastic section modulus z-z axis	Wplz=816 cm³
Warping constant	Iw=895000 cm⁶
Torsion constant	It=513 cm⁴

Concrete density (const.stage)	D'c=19 kN/m³
Concrete density (final stage)	Dc=18 kN/m³
Slab depth	Ds=300 mm
Depth of profiling	Dp=285 mm
Centres of profiles	Ct=600 mm
Width at inside of profile	wip=548 mm
Width at outside of profile	wop=424 mm
Deck and end closures	wg=0.2 kN/m²
Construction load	wc=0.5 kN/m²
Floor & minor services	wf=0.25 kN/m²
Ceiling	wci=0 kN/m²
Occupancy	wo=3.5 kN/m²
Partitions	wp=1 kN/m²
Variable load reduction	wr=0 kN/m²
Metal Decking bearing length	mdbl=75 mm
Cover to top flange of ASB	cover=30 mm
Thickness of end plate	tep=10 mm
Diameter of bolts	db=20 mm
Total number of bolts to be used	bn=4
Distance from top edge of plate	e4=10 mm
Distance to first row of bolts	e1=100 mm
Pitch of bolts vertically	p1=80 mm
Bolt cross-centres	p3=120 mm
Width of end plate	bep=200 mm

Weld strength between beam and end plate

Load on weld	FwEdw=W33/(4*(hep-2*e4))=0.35456 kN/mm
Weld size (leg length)	sw=20 mm

Since FwEdw ≤ FwRdw (0.35456 kN/mm ≤ 3.3769 kN/mm), the 20 mm fillet weld is satisfactory.

CONNECTION SUMMARY

All dimensions are in mm unless otherwise shown.

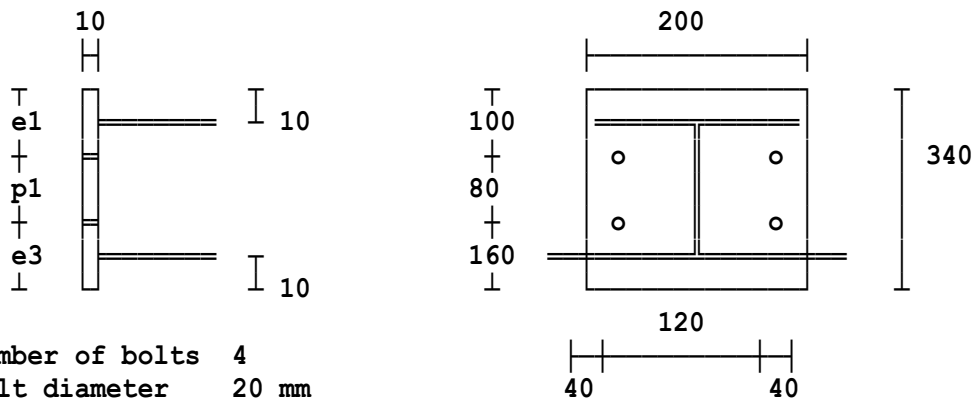

Number of bolts	**4**
Bolt diameter	**20 mm**
Bolt grade	**8.8**
Plate grade	**S 355**
Weld size	**20 mm**

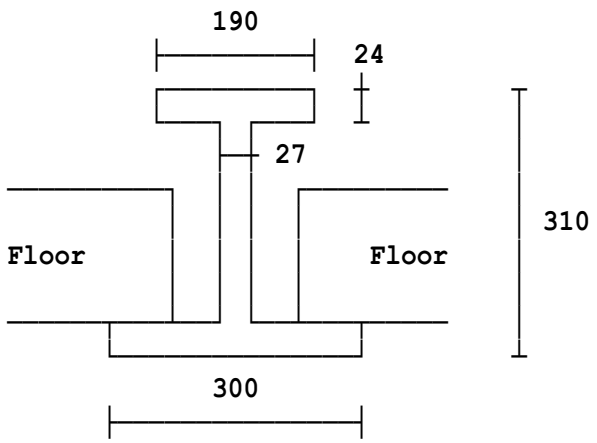

Section through ASB beam with metal decking supported on bottom flange

Asymmetric beam (ASB)	**300 ASB 153 Grade S 355**	
	Design strength	**345 N/mm²**
	Design shear force	**226.9 kN**
DESIGN	**Shear plastic resistance**	**1929 kN**
SUMMARY	**Design moment**	**380.1 kNm**
	Moment resistance	**745.2 kNm**
	Buckling resistance	**607.3 kNm**
	Variable load deflection	**11.37 mm**
	Deflection to span ratio	**1: 589**
	Total deflection	**16.4 mm**
	Deflection to span ratio	**1: 408**
	Interaction factors	**0.0596 ≤ 1**

NOTE: Use lightweight aggregate concrete (LWAC) and provide top reinforcement to tie the floor on each side of the beam together in order to meet robustness requirements.

Location: Ex4 With concrete at underside of of top flange

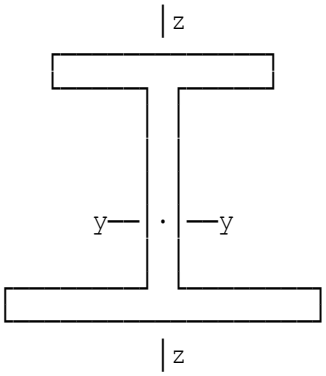

Simply supported beam

Slim floor construction non-composite asymmetric beam. Calculations are in accordance with EC3 Part 1-1 and SCI publication P385 entitled 'Design of Steel Beams in Torsion'.

Axis y-y passes through the asymmetric beam (ASB) centroid.

Beam span	L1=6.7 m
Beam cross-centres	L2=7.5 m

Summary of steel section properties

Cross-sectional area	A=195 cm²
Depth of section	h=310 mm
Distance to centroid	ye'=174 mm
Distance to centroid	zbar=136 mm

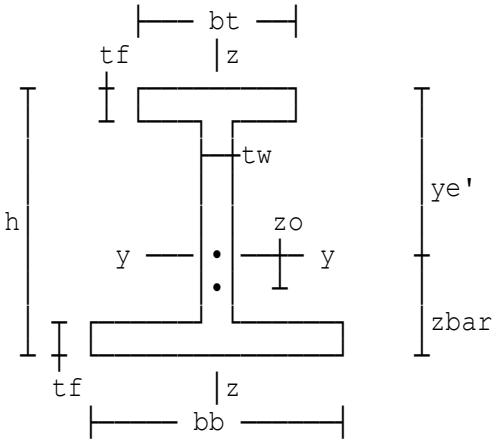

Dimension zo is the distance to shear centre from beam centroid.
bt = Top flange width
tf = Flange thickness
bb = Bottom flange width
tw = Web thickness
Axis y-y passes through the beam centroid.
zo is the distance to shear centre from the centroid of the beam.

tw	tw=27 mm
tf	tf=24 mm
bt	bt=190 mm
bb	bb=300 mm
Root radius	r=27 mm
ASB 2nd moment of area y-y axis	Iy=28398 cm⁴
ASB 2nd moment of area z-z axis	Iz=6840 cm⁴
Radius of gyration @ y-y axis	iy=12.1 cm
Radius of gyration @ z-z axis	iz=5.93 cm
Depth between beam flanges	hw=h-2*tf=262 mm
Distance to top flange centroid	ht=ye*10-tf/2=162 mm
Distance to bot.flange centroid	hb=h-ye'-tf/2=124 mm
2nd moment of area top flange	Iyt=tf*bt^3/12*1E-4=1371.8 cm⁴
2nd moment of area bottom flange	Iyb=tf*bb^3/12*1E-4=5400 cm⁴
Distance centroid to shear centre	zo=(hb*Iyb-ht*Iyt)/(Iyt+Iyb)=66.063 mm
Plastic section modulus y-y axis	Wply=2160 cm³
Plastic section modulus z-z axis	Wplz=816 cm³
Warping constant	Iw=895000 cm⁶
Torsion constant	It=513 cm⁴

Concrete density (const.stage)	D'c=19 kN/m³
Concrete density (final stage)	Dc=18 kN/m³
Slab depth	Ds=300 mm
Depth of profiling	Dp=285 mm
Centres of profiles	Ct=600 mm
Width at inside of profile	wip=548 mm
Width at outside of profile	wop=424 mm
Deck and end closures	wg=0.2 kN/m²
Construction load	wc=0.5 kN/m²
Floor & minor services	wf=0.25 kN/m²
Ceiling	wci=0 kN/m²
Occupancy	wo=3.5 kN/m²
Partitions	wp=1 kN/m²
Variable load reduction	wr=0 kN/m²
Metal Decking bearing length	mdbl=75 mm
Thickness of end plate	tep=10 mm
Diameter of bolts	db=20 mm
Total number of bolts to be used	bn=4
Distance from top edge of plate	e4=10 mm
Distance to first row of bolts	e1=100 mm
Pitch of bolts vertically	p1=80 mm
Bolt cross-centres	p3=120 mm
Width of end plate	bep=200 mm

Weld strength between beam and end plate

Load on weld	FwEdw=W33/(4*(hep-2*e4))=0.35456 kN/mm
Weld size (leg length)	sw=20 mm

Since FwEdw ≤ FwRdw (0.35456 kN/mm ≤ 3.3769 kN/mm), the 20 mm fillet weld is satisfactory.

CONNECTION SUMMARY

All dimensions are in mm unless otherwise shown.

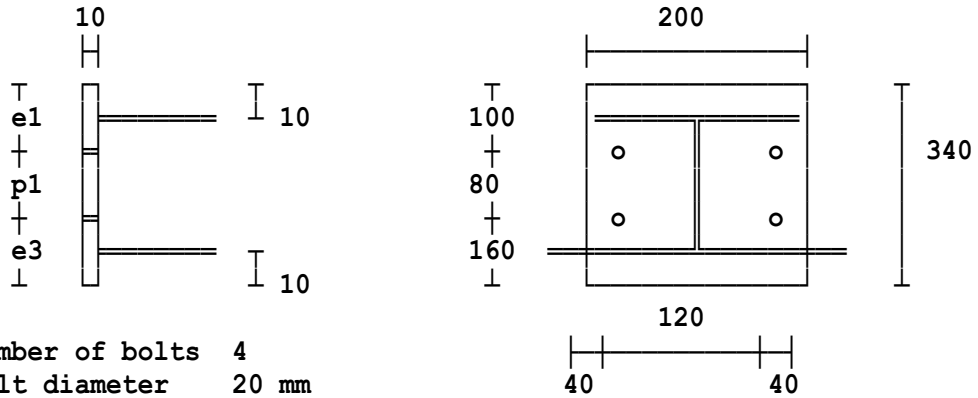

Number of bolts	**4**
Bolt diameter	**20 mm**
Bolt grade	**8.8**
Plate grade	**S 355**
Weld size	**20 mm**

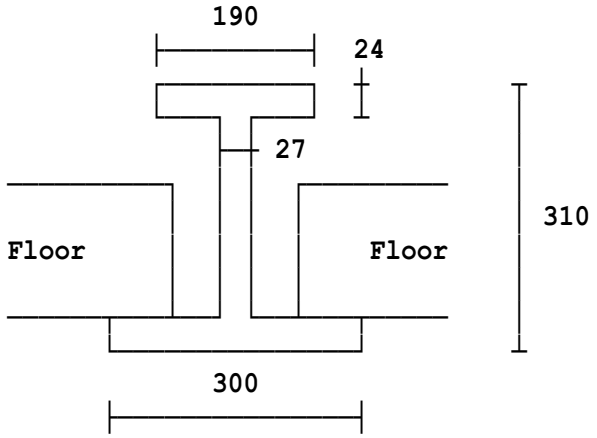

Section through ASB beam with metal decking supported on bottom flange

Asymmetric beam (ASB)	**300 ASB 153 Grade S 355**	
	Design strength	**345 N/mm²**
	Design shear force	**226.9 kN**
DESIGN	**Shear plastic resistance**	**1929 kN**
SUMMARY	**Design moment**	**380.1 kNm**
	Moment resistance	**745.2 kNm**
	Buckling resistance	**607.3 kNm**
	Variable load deflection	**13.74 mm**
	Deflection to span ratio	**1: 487**
	Total deflection	**19.3 mm**
	Deflection to span ratio	**1: 347**
	Interaction factors	**0.0596 ≤ 1**

NOTE: Use lightweight aggregate concrete (LWAC) and provide top reinforcement to tie the floor on each side of the beam together in order to meet robustness requirements.

Location: Example in Moment Connections publication

Unstiffened column slab base

Calculations are in accordance with 'Joints in Steel Construction Moment Connections' published by The Steel Construction Institute.

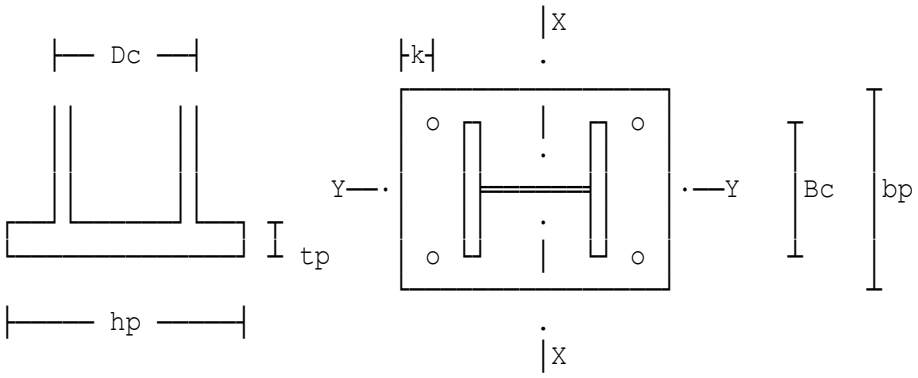

ELEVATION PLAN

Axial load (+ve compression)	N=300 kN
Moment about X-X axis	M=345 kNm
Shear on the base in Y direction	Fy=75 kN

305 x 305 x 118 UC.

Length of baseplate	hp=600 mm
Breadth of baseplate	bp=600 mm
Edge distance to bolt centre line	k=75 mm
Strength of concrete	fcu=30 N/mm²
Assumed weld size	sw=12 mm
Selected baseplate thickness	tp=50 mm

Total number of bolts to be used	n=8
Assumed diameter of bolt	bd=24 mm
Overall embedded depth	Lo=450 mm
Assumed cover to reinforcement	cv=50 mm
tension reinforcement	Asp=0.15 %
Selected fillet weld size	sw=12 mm

Web welds

Length of web weld	Lwv=2*dc=493.4 mm
Weld force per mm	Fyw=Fy*10^3/Lwv=152.01 N/mm
Weld size required	sww=Fyw/(0.7*pw)=0.98706 mm
Selected fillet weld size	sfw=8 mm

SUMMARY

BASEPLATE	**Size 600 mm x 600 mm x 50 mm**	
REQUIREMENTS	**Grade S 275 steel**	
	Edge distance	**75 mm**
	Number of H.D. bolts	**8**
	Diameter of bolts	**M 24**
	Grade 8.8	
	Overall embedded depth	**450 mm**
	Anchor plate size:	
	120 mm x 120 mm x 20 mm	
	Concrete/grout (fcu)	**30 N/mm²**
WELDS		
TENSION	**Fillet weld**	**12 mm**
	Contact areas on the baseplate and column are machined to give a tight bearing contact.	
	The specified tension weld will be used for both flanges.	
WEB	**Fillet weld**	**8 mm**

Location: Example based on proforma 462 arrangement

Unstiffened column slab base

Calculations are in accordance with 'Joints in Steel Construction Moment Connections' published by The Steel Construction Institute.

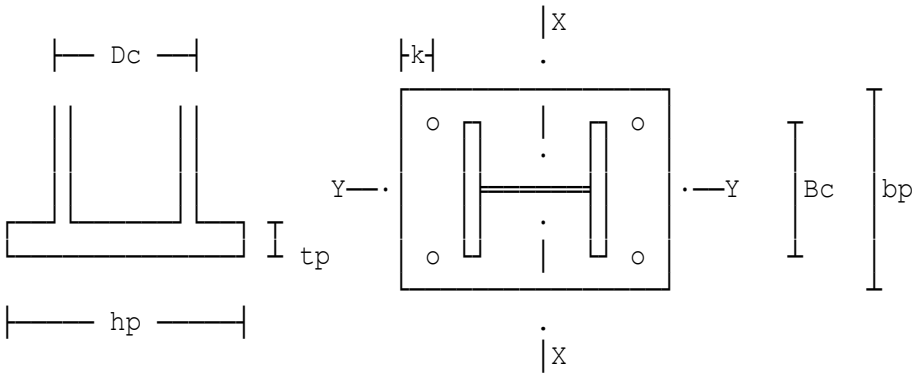

ELEVATION PLAN

Axial load (+ve compression)	N=38.34 kN
Moment about X-X axis	M=204 kNm
Shear on the base in Y direction	Fy=12.15 kN

533 x 210 x 101 UB.

Length of baseplate	hp=700 mm
Breadth of baseplate	bp=400 mm
Edge distance to bolt centre line	k=50 mm
Strength of concrete	fcu=25 N/mm²
Assumed weld size	sw=8 mm
Selected baseplate thickness	tp=25 mm

Total number of bolts to be used	n=6
Assumed diameter of bolt	bd=24 mm
Overall embedded depth	Lo=450 mm
Assumed cover to reinforcement	cv=50 mm
tension reinforcement	Asp=0.2 %
Selected fillet weld size	sw=8 mm

Web welds

Length of web weld	Lwv=2*dc=953 mm
Weld force per mm	Fyw=Fy*10^3/Lwv=12.749 N/mm
Weld size required	sww=Fyw/(0.7*pw)=0.082787 mm
Selected fillet weld size	sfw=8 mm

SUMMARY

BASEPLATE	**Size 700 mm x 400 mm x 25 mm**	
REQUIREMENTS	**Grade S 275 steel**	
	Edge distance	**50 mm**
	Number of H.D. bolts	**6**
	Diameter of bolts	**M 24**
	Grade 8.8	
	Overall embedded depth	**450 mm**
	Anchor plate size:	
	120 mm x 120 mm x 20 mm	
	Concrete/grout (fcu)	**25 N/mm²**
WELDS		
TENSION	**Fillet weld**	**8 mm**
	Contact areas on the baseplate and column are machined to give a tight bearing contact.	
	The specified tension weld will be used for both flanges.	
WEB	**Fillet weld**	**8 mm**

Location: Odd numbers arrangement

Unstiffened column slab base

Calculations are in accordance with 'Joints in Steel Construction Moment Connections' published by The Steel Construction Institute.

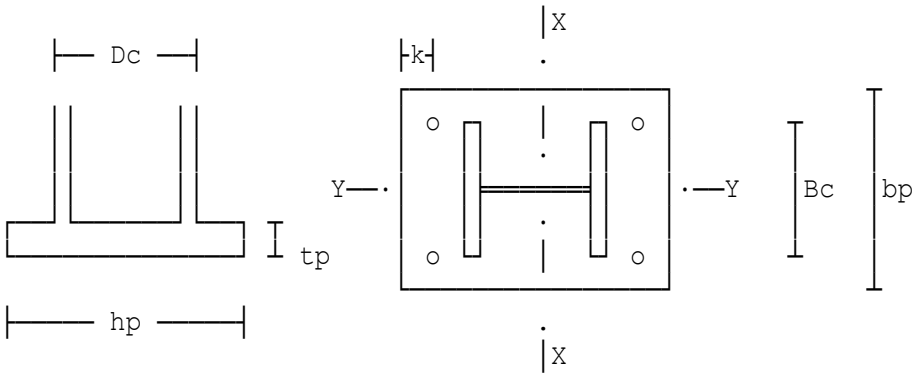

ELEVATION PLAN

Axial load (+ve compression)	N=200 kN
Moment about X-X axis	M=350 kNm
Shear on the base in Y direction	Fy=50 kN
Length of baseplate	hp=600 mm
Breadth of baseplate	bp=400 mm
Edge distance to bolt centre line	k=50 mm
Strength of concrete	fcu=20 N/mm²
Assumed weld size	sw=12 mm
Selected baseplate thickness	tp=20 mm
Total number of bolts to be used	n=6
Assumed diameter of bolt	bd=30 mm
Overall embedded depth	Lo=450 mm
Assumed cover to reinforcement	cv=50 mm
tension reinforcement	Asp=0.32 %
Selected fillet weld size	sw=12 mm
Selected fillet weld size	swc=12 mm

Web welds

Length of web weld	Lwv=2*dc=772 mm
Weld force per mm	Fyw=Fy*10^3/Lwv=64.767 N/mm
Weld size required	sww=Fvw/(0.7*pw)=0.73072 mm
Selected fillet weld size	sfw=12 mm

SUMMARY

BASEPLATE	**Size 600 mm x 400 mm x 20 mm**	
REQUIREMENTS	**Grade S 275 steel**	
	Edge distance	**50 mm**
	Number of H.D. bolts	**6**
	Diameter of bolts	**M 30**
	Grade 8.8	
	Overall embedded depth	**450 mm**
	Anchor plate size:	
	150 mm x 150 mm x 25 mm	
	Base plate set in a shallow pocket	
	Concrete/grout (fcu)	**20 N/mm²**
WELDS		
TENSION	**Fillet weld**	**12 mm**
COMPRESSION	**Fillet weld**	**12 mm**
WEB	**Fillet weld**	**12 mm**

Location: Ex1 - Example in Moment Connections publication

Unstiffened column slab base

Calculations are in accordance with EC3 Parts 1-1, 1-8 and publication entitled 'Joints in Steel Construction: Simple Joints to EC3' by SCI.

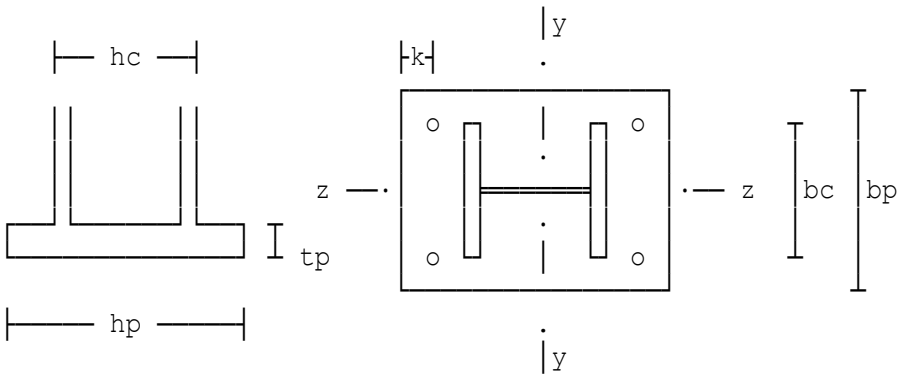

ELEVATION PLAN

Axial load (compression)	NEd=300 kN
Moment about y-y axis	MyEd=345 kNm
Shear on the base in z direction	VcEd=75 kN

305 x 305 x 118 UKC

Length of baseplate	hp=600 mm
Breadth of baseplate	bp=600 mm
Edge distance to bolt centre line	k=75 mm
Characteristic cylinder strength	fck=25 N/mm²
Selected baseplate thickness	tp=50 mm
Total number of bolts to be used	n=8
Assumed diameter of bolt	bd=24 mm
Overall embedded depth	Lo=450 mm
Assumed cover to reinforcement	cv=50 mm
Assumed percentage area of tension reinforcement	Asp=0.15 %
Punching shear force	VEd=ABS(FtlEd)=775.18 kN
Shear stress at control perimeter	vEd=beta*VEd*1000/(u1*dav) =0.36062 N/mm²
Design punching shear resistance	vRdc=(0.18/gamc)*k*(100*p1 *fck)^0.333=0.31812 N/mm²
Shear enhancement 2d/av	senh=1

The min design punching shear resistance governs and will be adopted.

Design punching shear resistance	vRdc=senh*0.035*k^1.5*fck^0.5 =0.39033 N/mm²

As vEd ≤ vRdc (0.36062 N/mm² ≤ 0.39033 N/mm²), the anchorage arrangement is considered suitable.

Column tension flange welds

Weld design shear strength	fvwd=fu/SQR(3)/(betaw*gamM2) =222.79 N/mm²
Force in the tension flange	Tt=MyEd*10^3/(hc-tfc)-Ta=1051.4 kN
Weld force per mm	FwRd=Tff/(2*bc-twc)=1.7442 kN/mm
Weld size required	swf=FwRd*10^3/(0.7*fvwd)=11.184 mm
Selected fillet weld size	sw=12 mm

Column compression flange welds

The specified tension weld will be used for both flanges.

Column web welds

Weld force per mm	FwRd1=VcEd*10^3/Lwv=152.01 N/mm
Weld size required	sww=FwRd1/(0.7*fvwd)=0.9747 mm
Selected fillet weld size	sfw=8 mm

SUMMARY

BASEPLATE	**Size 600 mm x 600 mm x 50 mm**	
REQUIREMENTS	**Grade S 275 steel**	
	Edge distance	**75 mm**
	Number of H.D. bolts	**8**
	Diameter of bolts	**M 24**
	Grade 8.8	
	Overall embedded depth	**450 mm**
	Anchor plate size:	
	120 mm x 120 mm x 20 mm	
	Concrete/grout (fck)	**25 N/mm²**
WELD SUMMARY		
TENSION	**Fillet weld**	**12 mm**
	Contact areas on the baseplate and column are machined to give a tight bearing contact.	
	The specified tension weld will be used for both flanges.	
WEB	**Fillet weld**	**8 mm**

Location: Ex2 - Example based on proforma 462 arrangement

Unstiffened column slab base

Calculations are in accordance with EC3 Parts 1-1, 1-8 and publication entitled 'Joints in Steel Construction: Simple Joints to EC3' by SCI.

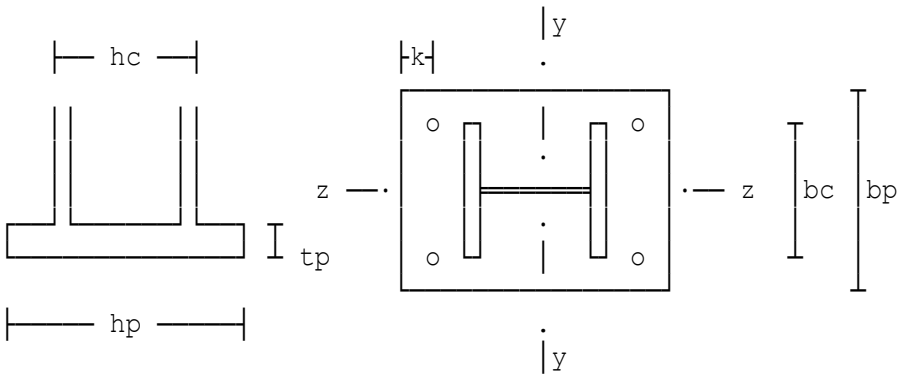

ELEVATION PLAN

Axial load (compression)	NEd=38.34 kN
Moment about y-y axis	MyEd=204 kNm
Shear on the base in z direction	VcEd=12.15 kN

533 x 210 x 101 UKB

Length of baseplate	hp=700 mm
Breadth of baseplate	bp=400 mm
Edge distance to bolt centre line	k=50 mm
Characteristic cylinder strength	fck=20 N/mm²
Selected baseplate thickness	tp=25 mm
Total number of bolts to be used	n=6
Assumed diameter of bolt	bd=24 mm
Overall embedded depth	Lo=450 mm
Assumed cover to reinforcement	cv=50 mm
Assumed percentage area of tension reinforcement	Asp=0.2 %
Punching shear force	VEd=ABS(FtlEd)=345.34 kN
Shear stress at control perimeter	vEd=beta*VEd*1000/(u1*dav) =0.16885 N/mm²
Design punching shear resistance	vRdc=(0.18/gamc)*k*(100*p1 *fck)^0.333=0.32503 N/mm²
Shear enhancement 2d/av	senh=1

The min design punching shear resistance governs and will be adopted.

Design punching shear resistance	vRdc=senh*0.035*k^1.5*fck^0.5 =0.34912 N/mm²

As vEd ≤ vRdc (0.16885 N/mm² ≤ 0.34912 N/mm²), the anchorage arrangement is considered suitable.

Column tension flange welds

Weld design shear strength	fvwd=fu/SQR(3)/(betaw*gamM2) =222.79 N/mm²
Force in the tension flange	Tt=MyEd*10^3/(hc-tfc)-Ta=381.98 kN
Weld force per mm	FwRd=Tff/(2*bc-twc)=0.93348 kN/mm
Weld size required	swf=FwRd*10^3/(0.7*fvwd)=5.9857 mm
Selected fillet weld size	sw=8 mm

Column compression flange welds

The specified tension weld will be used for both flanges.

Column web welds

Weld force per mm	FwRd1=VcEd*10^3/Lwv=12.749 N/mm
Weld size required	sww=FwRd1/(0.7*fvwd)=0.081751 mm
Selected fillet weld size	sfw=8 mm

SUMMARY

BASEPLATE	**Size 700 mm x 400 mm x 25 mm**	
REQUIREMENTS	**Grade S 275 steel**	
	Edge distance	**50 mm**
	Number of H.D. bolts	**6**
	Diameter of bolts	**M 24**
	Grade 8.8	
	Overall embedded depth	**450 mm**
	Anchor plate size:	
	120 mm x 120 mm x 20 mm	
	Concrete/grout (fck)	**20 N/mm²**
WELD SUMMARY		
TENSION	**Fillet weld**	**8 mm**
	Contact areas on the baseplate and column are machined to give a tight bearing contact.	
	The specified tension weld will be used for both flanges.	
WEB	**Fillet weld**	**8 mm**

Location: Ex3 - Odd numbers arrangement

Unstiffened column slab base

Calculations are in accordance with EC3 Parts 1-1, 1-8 and publication entitled 'Joints in Steel Construction: Simple Joints to EC3' by SCI.

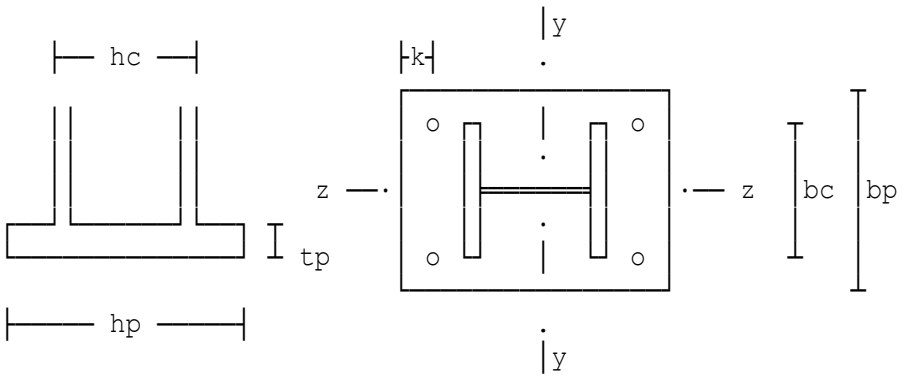

ELEVATION PLAN

Axial load (compression)	NEd=200 kN
Moment about y-y axis	MyEd=350 kNm
Shear on the base in z direction	VcEd=50 kN
Length of baseplate	hp=600 mm
Breadth of baseplate	bp=400 mm
Edge distance to bolt centre line	k=50 mm
Characteristic cylinder strength	fck=25 N/mm²
Selected baseplate thickness	tp=35 mm
Total number of bolts to be used	n=6
Assumed diameter of bolt	bd=30 mm
Overall embedded depth	Lo=450 mm
Assumed cover to reinforcement	cv=50 mm
Assumed percentage area of tension reinforcement	Asp=0.42 %
Punching shear force	VEd=ABS(FtlEd)=652.69 kN
Shear stress at control perimeter	vEd=beta*VEd*1000/(u1*dav) =0.43137 N/mm²
Design punching shear resistance	vRdc=(0.18/gamc)*k*(100*p1 *fck)^0.333=0.44823 N/mm²

As vEd ≤ vRdc (0.43137 N/mm² ≤ 0.44823 N/mm²), the anchorage arrangement is considered suitable.

Column tension flange welds

Weld design shear strength	fvwd=fu/SQR(3)/(betaw*gamM2) =222.79 N/mm²
Force in the tension flange	Tt=MyEd*10^3/(hc-tfc)-Ta=752.6 kN
Weld force per mm	FwRd=Tff/(2*bc-twc)=1.5518 kN/mm
Weld size required	swf=FwRd*10^3/(0.7*fvwd)=9.9502 mm
Selected fillet weld size	sw=12 mm

Column compression flange welds

The specified tension weld will be used for both flanges.

Column web welds

Weld force per mm	FwRd1=VcEd*10^3/Lwv=64.767 N/mm
Weld size required	sww=FwRd1/(0.7*fvwd)=0.4153 mm
Selected fillet weld size	sfw=12 mm

SUMMARY

BASEPLATE	**Size 600 mm x 400 mm x 35 mm**	
REQUIREMENTS	**Grade S 275 steel**	
	Edge distance	**50 mm**
	Number of H.D. bolts	**6**
	Diameter of bolts	**M 30**
	Grade 8.8	
	Overall embedded depth	**450 mm**
	Anchor plate size:	
	150 mm x 150 mm x 25 mm	
	Concrete/grout (fck)	**25 N/mm²**
WELD SUMMARY		
TENSION	**Fillet weld**	**12 mm**
	Contact areas on the baseplate and column are machined to give a tight bearing contact.	
	The specified tension weld will be used for both flanges.	
WEB	**Fillet weld**	**12 mm**

Location: Ex4 - SCI Example 20

Unstiffened column slab base

Calculations are in accordance with EC3 Parts 1-1, 1-8 and publication entitled 'Joints in Steel Construction: Simple Joints to EC3' by SCI.

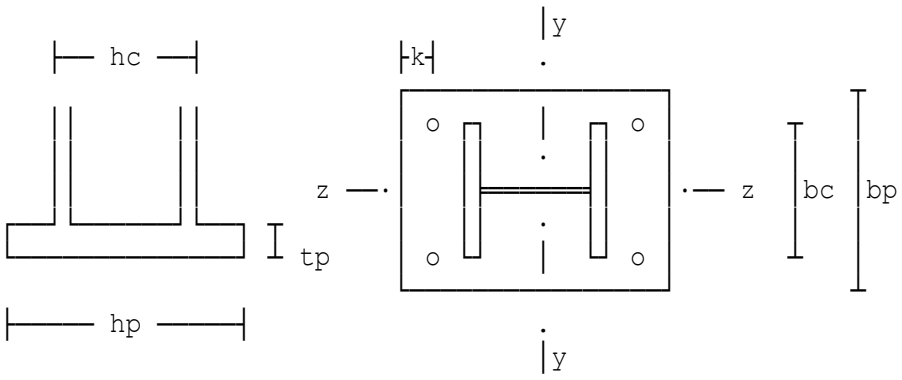

ELEVATION PLAN

Axial load (compression)	NEd=1380 kN
Moment about y-y axis	MyEd=185 kNm
Shear on the base in z direction	VcEd=75 kN

305 x 305 x 137 UKC

Length of baseplate	hp=600 mm
Breadth of baseplate	bp=600 mm
Edge distance to bolt centre line	k=75 mm
Characteristic cylinder strength	fck=25 N/mm²
Selected baseplate thickness	tp=40 mm
Number of bolts to be used	n=4
Bolt diameter	bd=24

Column tension flange welds

Weld design shear strength fvwd=fu/SQR(3)/(betaw*gamM2)
=222.79 N/mm²

As tension is not developed in the foundation, a nominal weld size needs to be specified.

Selected fillet weld size sw=8 mm

Column compression flange welds

The specified tension weld will be used for both flanges.

Column web welds

Weld force per mm	FwRd1=VcEd*10^3/Lwv=152.01 N/mm
Weld size required	sww=FwRd1/(0.7*fvwd)=0.9747 mm
Selected fillet weld size	sfw=8 mm

SUMMARY

BASEPLATE	**Size 600 mm x 600 mm x 40 mm**	
REQUIREMENTS	**Grade S 275 steel**	
	Edge distance	**75 mm**
	Number of H.D. bolts	**4**
	Diameter of bolts	**M 24**
	Grade 8.8	
	Concrete/grout (fck)	**25 N/mm²**
WELD SUMMARY		
TENSION	**Fillet weld**	**8 mm**
	Contact areas on the baseplate and column are machined to give a tight bearing contact.	
	The specified tension weld will be used for both flanges.	
WEB	**Fillet weld**	**8 mm**

Location: Ex1 - Based on joints publication

Bolted extended end plate connection - beam to column

Calculations are in accordance with BS5950-1:2000 and follow the procedure given in the SCI publication 207/95 entitled 'Joints in Steel Construction Moment Connections'.
Beams are connected to both column flanges. The web panel shear can be discounted in the determination of the compressive force as the connection is assumed to have balanced moments.

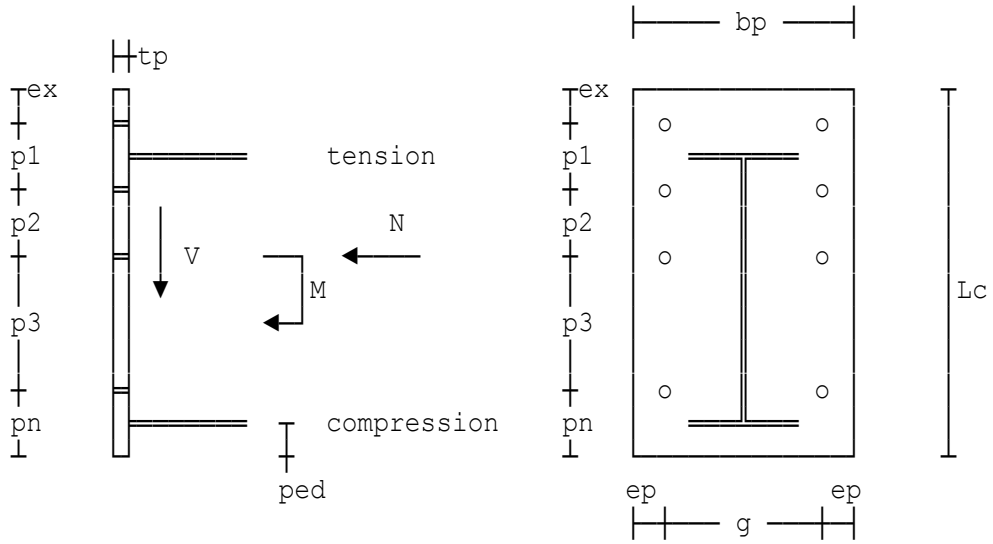

Factored moment	Ma=405 kNm
Factored shear force	V=60 kN
Axial force (+ve compression)	N=0 kN

254 x 254 x 107 UC.
533 x 210 x 92 UB.

Diameter of bolts	bd=24 mm
Thickness of plate	tp=25 mm
Total number of bolts	bn=8
Number of shear bolts	ns=2
Distance to first row of bolts	ex=50 mm
Distance to beam flange	x=40 mm
Pitch to second row of bolts	p1=100 mm
Pitch of tension bolts	p2=90 mm
Distance tension to shear bolts	p3=320 mm
Edge distance for shear bolts	pn=100 mm
Bolt cross-centres	g=100 mm
Width of end plate	bp=250 mm
Assumed web fillet weld size	sww=8 mm
Assumed flange fillet weld size	swf=12 mm

SUMMARY OF BOLT POTENTIAL RESISTANCES

Top row of bolts	Pr1=370.98 kN
Row 2	Pr2=314.76 kN
Row 3	Pr3=286.25 kN

Penetration butt weld size	sbt=8 mm
Superimposed fillet weld size	swt=10 mm
Selected fillet weld size	sfw=8 mm

Connection is considered to be suitable.

CONNECTION SUMMARY

Connection forms part of a two sided connection.

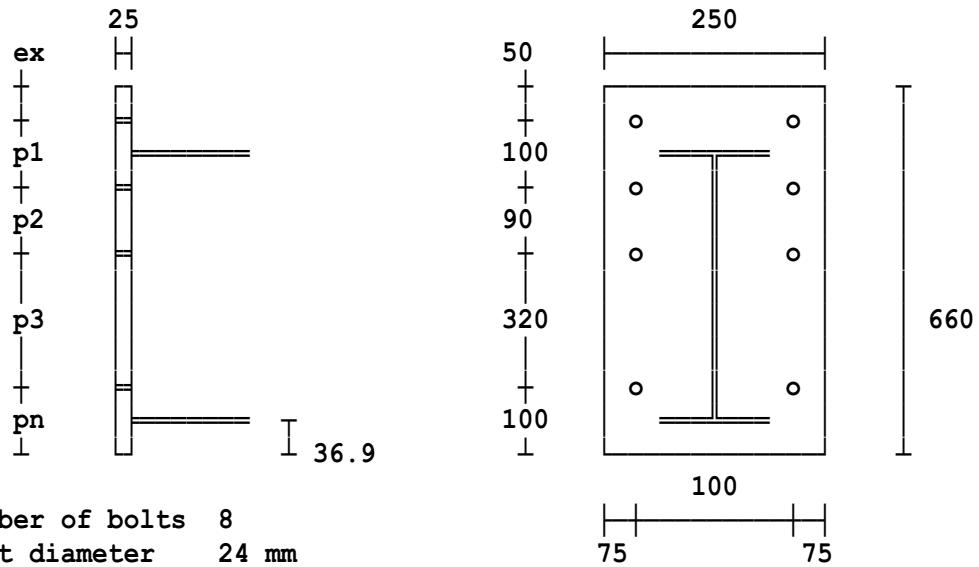

Number of bolts	**8**	
Bolt diameter	**24 mm**	
Bolt grade	**8.8**	
Tension	**Partial penetration butt welds**	**8 mm**
Flange Welds	**Superimposed fillet welds**	**10 mm**
	Web fillet weld	**8 mm**
	Compression flange fillet weld	**8 mm**
Supporting column section	**254 x 254 x 107 UC**	
	Grade S 275	
Beam / Rafter section	**533 x 210 x 92 UB**	
	Grade S 275	

Column stiffener details

No enhancement of the column required.

Location: Ex2 - Using 6 rows of tension bolts

Bolted extended end plate connection - beam to column

Calculations are in accordance with BS5950-1:2000 and follow the procedure given in the SCI publication 207/95 entitled 'Joints in Steel Construction Moment Connections'.
Beams are connected to both column flanges. The web panel shear can be discounted in the determination of the compressive force as the connection is assumed to have balanced moments.

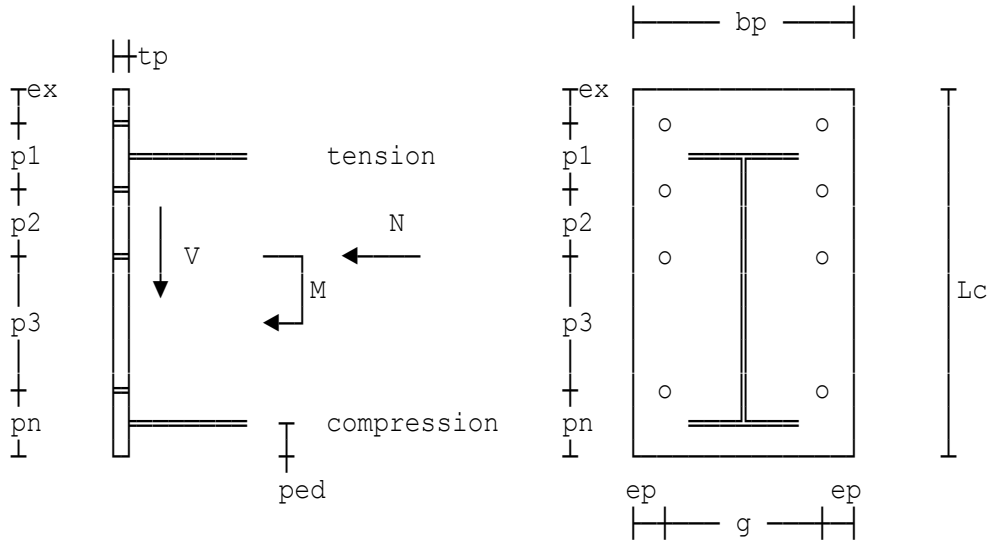

Factored moment	Ma=678 kNm
Factored shear force	V=230 kN
Axial force (+ve compression)	N=100 kN

254 x 254 x 107 UC.
686 x 254 x 125 UB.

Diameter of bolts	bd=24 mm
Thickness of plate	tp=25 mm
Total number of bolts	bn=14
Number of shear bolts	ns=2
Distance to first row of bolts	ex=50 mm
Distance to beam flange	x=40 mm
Pitch to second row of bolts	p1=100 mm
Pitch of tension bolts	p2=90 mm
Edge distance for shear bolts	pn=100 mm
Over-all length of end plate	Lc=805 mm
Bolt cross-centres	g=100 mm
Width of end plate	bp=250 mm
Assumed web fillet weld size	sww=8 mm
Assumed flange fillet weld size	swf=12 mm

SUMMARY OF BOLT POTENTIAL RESISTANCES

Top row of bolts	Pr1=370.98 kN
Row 2	Pr2=314.76 kN
Row 3	Pr3=286.25 kN
Row 4	Pr4=286.25 kN
Row 5	Pr5=286.25 kN
Row 6	Pr6=286.25 kN

Weld size	ss=10 mm
Penetration butt weld size	sbt=8 mm
Superimposed fillet weld size	swt=10 mm
Selected fillet weld size	sfw=8 mm

Connection is considered to be suitable.

CONNECTION SUMMARY

Connection forms part of a two sided connection.

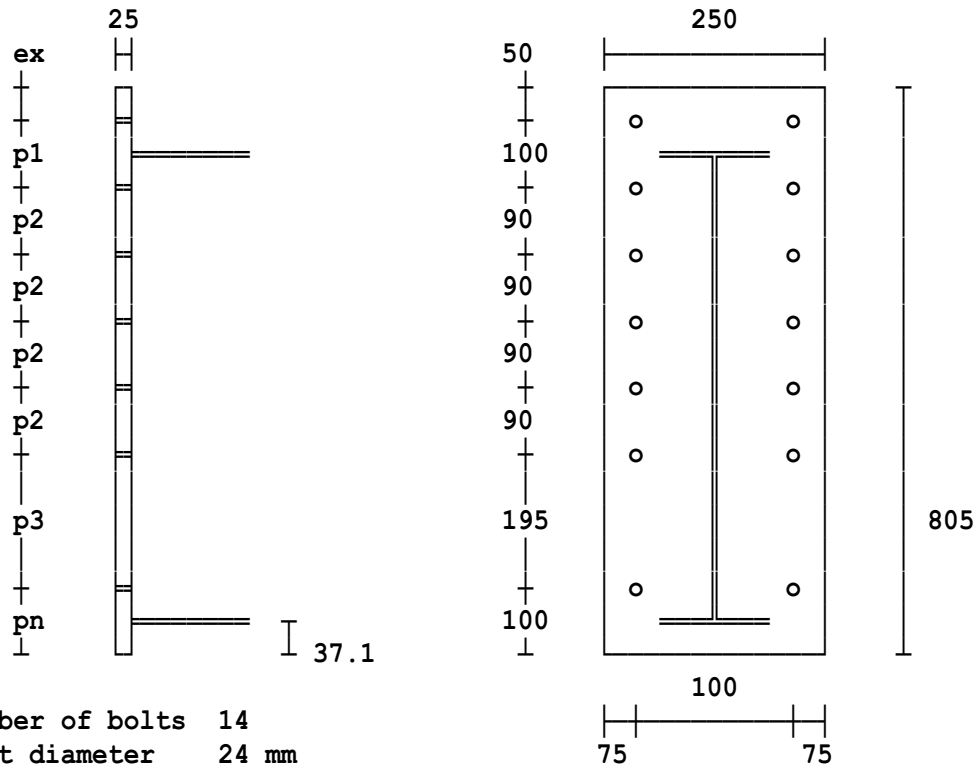

Number of bolts	**14**	
Bolt diameter	**24 mm**	
Bolt grade	**8.8**	
Tension	**Partial penetration butt welds**	**8 mm**
Flange Welds	**Superimposed fillet welds**	**10 mm**
	Web fillet weld	**8 mm**
	Compression flange fillet weld	**8 mm**

Supporting column section	**254 x 254 x 107 UC**
	Grade S 275
Beam / Rafter section	**686 x 254 x 125 UB**
	Grade S 275

Column stiffener details

Compression stiffeners	**2/120 mm x 25 mm Grade S 275 connected by 4/10 mm fillet welds.**

Location: Ex3 - Supplementary web plates and high shear

Bolted extended end plate connection - beam to column

Calculations are in accordance with BS5950-1:2000 and follow the procedure given in the SCI publication 207/95 entitled 'Joints in Steel Construction Moment Connections'.
The connection is one sided. The web panel shear cannot be discounted in the determination of the compressive force.

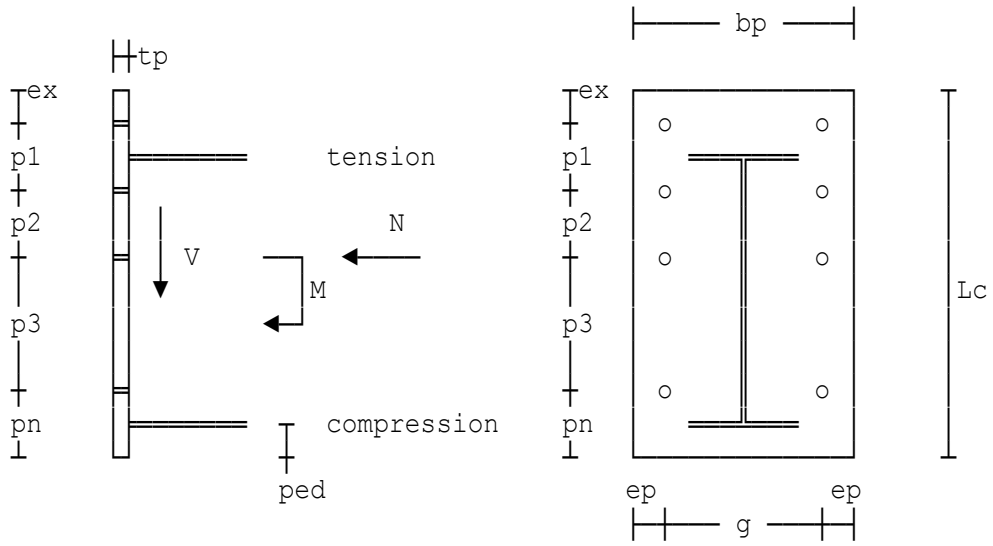

Factored moment	Ma=680 kNm
Factored shear force	V=647 kN
Axial force (+ve compression)	N=-100 kN

305 x 305 x 118 UC.
762 x 267 x 134 UB.

Diameter of bolts	bd=24 mm
Thickness of plate	tp=25 mm
Total number of bolts	bn=14
Number of shear bolts	ns=4
Distance to first row of bolts	ex=50 mm
Distance to beam flange	x=40 mm
Pitch to second row of bolts	p1=100 mm
Pitch of tension bolts	p2=90 mm
Edge distance for shear bolts	pn=100 mm
Over-all length of end plate	Lc=880 mm
Bolt cross-centres	g=140 mm
Width of end plate	bp=300 mm
Assumed web fillet weld size	sww=8 mm
Assumed flange fillet weld size	swf=12 mm

SUMMARY OF BOLT POTENTIAL RESISTANCES

Top row of bolts	Pr1=343.58 kN
Row 2	Pr2=259.37 kN
Row 3	Pr3=255.4 kN
Row 4	Pr4=199.88 kN
Row 5	Pr5=160.88 kN
Breadth	bsw=245 mm
Length	Ls=1180 mm
Thickness	tsw=12 mm
Selected fillet weld size	swt=12 mm
Selected fillet weld size	sfw=10 mm
Penetration butt weld size	sbtc=9 mm
Superimposed fillet weld size	swtc=10 mm

Connection is considered to be suitable.

CONNECTION SUMMARY

Connection is one sided beam to column arrangement.

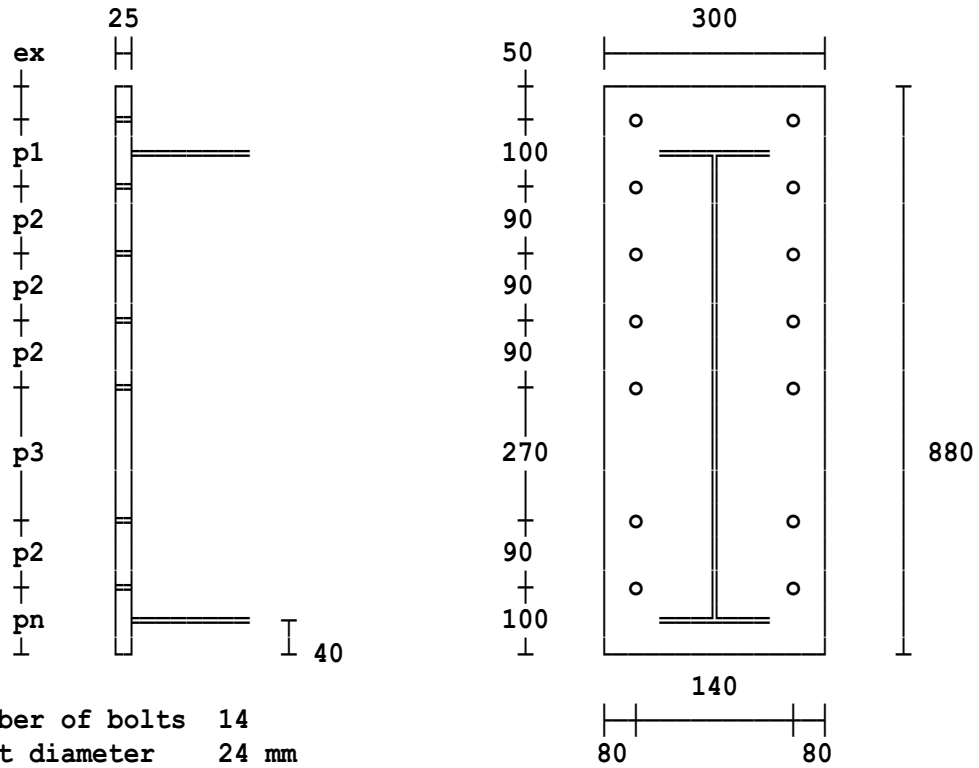

Number of bolts	**14**	
Bolt diameter	**24 mm**	
Bolt grade	**8.8**	
Welds	**Tension flange fillet weld**	**12 mm**
	Web fillet weld	**10 mm**
Compression	**Partial penetration butt welds**	**9 mm**
Flange Welds	**Superimposed fillet welds**	**10 mm**
Supporting column section	**305 x 305 x 118 UC**	
	Grade S 275	
Beam / Rafter section	**762 x 267 x 134 UB**	
	Grade S 275	

Column stiffener details

Supplementary web plate(s)	**1 plate 12 mm thick** **245 mm x 1180 mm** **12 mm fillet weld all round.**

Location: Ex4 - Diagonal stiffeners also used for compression

Bolted extended end plate connection - beam to column

Calculations are in accordance with BS5950-1:2000 and follow the procedure given in the SCI publication 207/95 entitled 'Joints in Steel Construction Moment Connections'.
The connection is one sided. The web panel shear cannot be discounted in the determination of the compressive force.

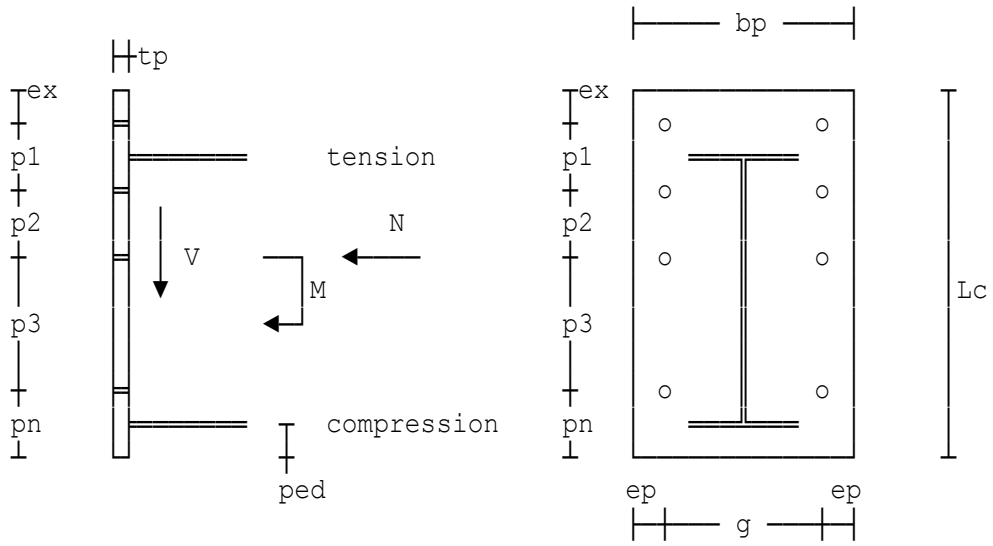

Factored moment	Ma=370 kNm
Factored shear force	V=128 kN
Axial force (+ve compression)	N=120 kN

305 x 305 x 97 UC.
610 x 229 x 101 UB.

Diameter of bolts	bd=24 mm
Thickness of plate	tp=25 mm
Total number of bolts	bn=8
Number of shear bolts	ns=2
Distance to first row of bolts	ex=50 mm
Distance to beam flange	x=40 mm
Pitch to second row of bolts	p1=100 mm
Pitch of tension bolts	p2=90 mm
Edge distance for shear bolts	pn=100 mm
Over-all length of end plate	Lc=730 mm
Bolt cross-centres	g=140 mm
Width of end plate	bp=300 mm
Assumed web fillet weld size	sww=8 mm
Assumed flange fillet weld size	swf=10 mm

SUMMARY OF BOLT POTENTIAL RESISTANCES

Top row of bolts	Pr1=317.69 kN
Row 2	Pr2=193.89 kN
Row 3	Pr3=110.98 kN
Weld size	sc=6 mm
Slip factor for preloaded bolts	mu=0.5
Coefficient for type of hole	Ks=1
Selected fillet weld size	swt=10 mm
Selected fillet weld size	sfw=10 mm

Connection is considered to be suitable.

CONNECTION SUMMARY

Connection is one sided beam to column arrangement.

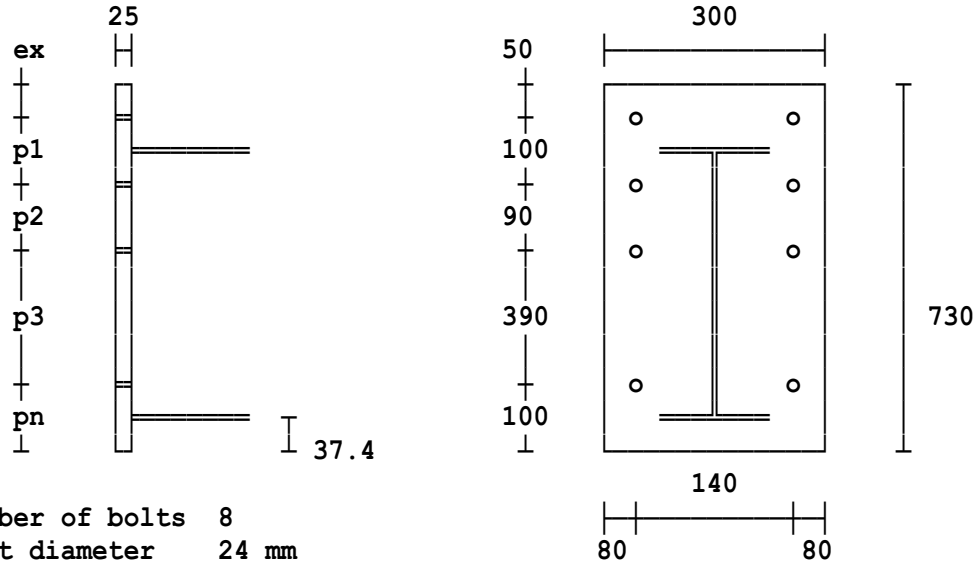

Number of bolts	**8**	
Bolt diameter	**24 mm**	
Bolt grade	**HSFG of general grade (8.8) to BS4395 Part 1. Nuts grade 10.**	
Welds	**Tension flange fillet weld**	**10 mm**
	Web fillet weld	**10 mm**
	Compression flange fillet weld	**10 mm**
Supporting column section	**305 x 305 x 97 UC Grade S 275**	
Beam / Rafter section	**610 x 229 x 101 UB Grade S 275**	

Column stiffener details

Diagonal stiffeners	**2/145 mm x 20 mm Grade S 275 on line between the beam tension and compression flanges connected by 4/6 mm fillet welds. Diagonal stiffeners also act as compression stiffeners.**

Location: Ex5 - Backing plates example

Bolted extended end plate connection - beam to column

Calculations are in accordance with BS5950-1:2000 and follow the procedure given in the SCI publication 207/95 entitled 'Joints in Steel Construction Moment Connections'.
Beams are connected to both column flanges. The web panel shear can be discounted in the determination of the compressive force as the connection is assumed to have balanced moments.

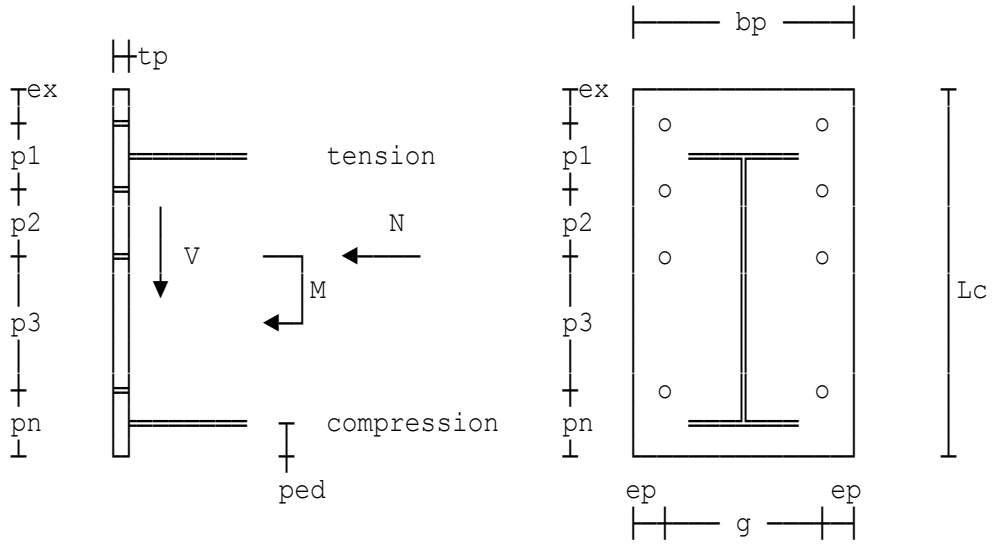

Factored moment	Ma=630 kNm
Factored shear force	V=267 kN
Axial force (+ve compression)	N=200 kN

305 x 305 x 97 UC.
686 x 254 x 140 UB.

Diameter of bolts	bd=24 mm
Thickness of plate	tp=25 mm
Total number of bolts	bn=14
Number of shear bolts	ns=2
Distance to first row of bolts	ex=50 mm
Distance to beam flange	x=40 mm
Pitch to second row of bolts	p1=100 mm
Pitch of tension bolts	p2=90 mm
Edge distance for shear bolts	pn=100 mm
Over-all length of end plate	Lc=815 mm
Bolt cross-centres	g=140 mm
Width of end plate	bp=280 mm
Assumed web fillet weld size	sww=8 mm
Assumed flange fillet weld size	swf=12 mm

SUMMARY OF BOLT POTENTIAL RESISTANCES

Top row of bolts	Pr1=305.93 kN
Row 2	Pr2=205.65 kN
Row 3	Pr3=110.98 kN
Row 4	Pr4=110.98 kN
Row 5	Pr5=110.98 kN
Row 6	Pr6=110.98 kN
Weld size	ss=8 mm
Thickness	tbp=15 mm
Width	bbp=145 mm
Length	Lbp=780 mm
Selected fillet weld size	swt=12 mm
Selected fillet weld size	sfw=10 mm

Connection is considered to be suitable.

CONNECTION SUMMARY

Connection forms part of a two sided connection.

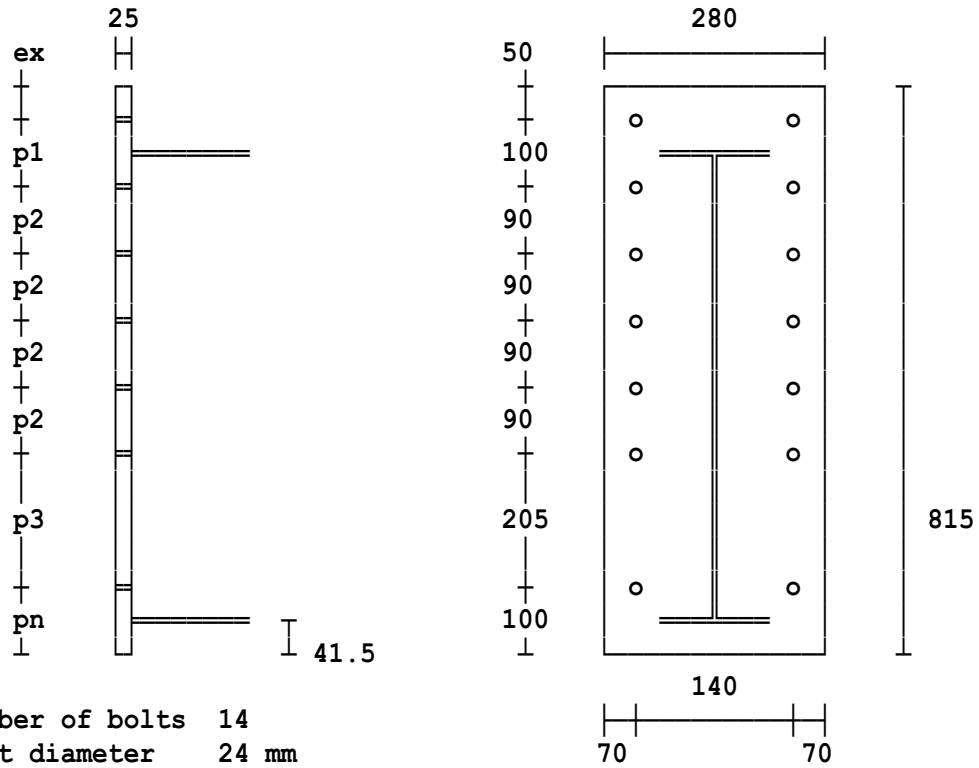

Number of bolts	**14**	
Bolt diameter	**24 mm**	
Bolt grade	**8.8**	
Welds	**Tension flange fillet weld**	**12 mm**
	Web fillet weld	**10 mm**
	Compression flange fillet weld	**8 mm**
Supporting column section	**305 x 305 x 97 UC**	
	Grade S 275	
Beam / Rafter section	**686 x 254 x 140 UB**	
	Grade S 275	

Column stiffener details

Compression stiffeners	**2/140 mm x 20 mm Grade S 275 connected by 4/8 mm fillet welds.**
Backing plates	**2/15 mm x 145 mm x 780 mm Grade S 275**

Location: Ex6 - Tension web stiffeners similar to example 1

Bolted extended end plate connection - beam to column

Calculations are in accordance with BS5950-1:2000 and follow the procedure given in the SCI publication 207/95 entitled 'Joints in Steel Construction Moment Connections'.
Beams are connected to both column flanges. The web panel shear can be discounted in the determination of the compressive force as the connection is assumed to have balanced moments.

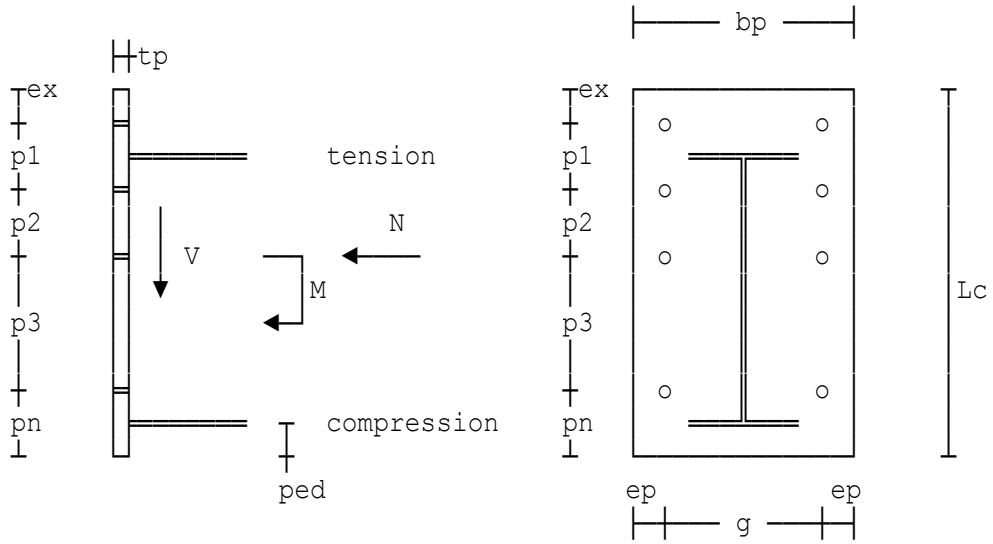

Factored moment	Ma=350 kNm
Factored shear force	V=60 kN
Axial force (+ve compression)	N=0 kN

254 x 254 x 73 UC.
533 x 210 x 92 UB.

Diameter of bolts	bd=24 mm
Thickness of plate	tp=25 mm
Total number of bolts	bn=8
Number of shear bolts	ns=2
Distance to first row of bolts	ex=50 mm
Distance to beam flange	x=40 mm
Pitch to second row of bolts	p1=100 mm
Pitch of tension bolts	p2=90 mm
Distance tension to shear bolts	p3=320 mm
Edge distance for shear bolts	pn=100 mm
Bolt cross-centres	g=100 mm
Width of end plate	bp=250 mm
Assumed web fillet weld size	sww=8 mm
Assumed flange fillet weld size	swf=12 mm

SUMMARY OF BOLT POTENTIAL RESISTANCES

Top row of bolts	Pr1=297.07 kN
Row 2	Pr2=231.52 kN
Row 3	Pr3=140.42 kN
Weld size	ss=8 mm
Stiffener width	bsgt=100 mm
Stiffener depth	Ls=180 mm
Proposed rib thickness	tsr=10 mm
Proposed weld size	ssr=10 mm
Penetration butt weld size	sbt=8 mm
Superimposed fillet weld size	swt=10 mm
Selected fillet weld size	sfw=8 mm

Connection is considered to be suitable.

CONNECTION SUMMARY

Connection forms part of a two sided connection.

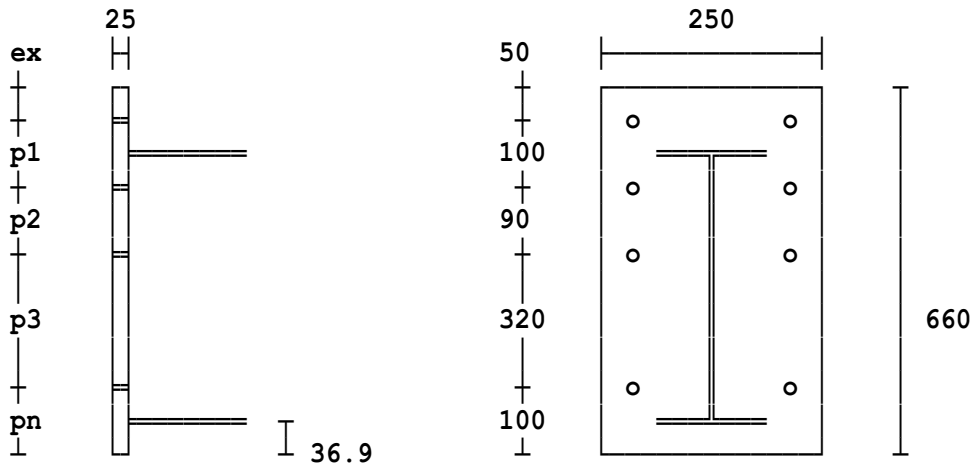

Number of bolts	**8**	
Bolt diameter	**24 mm**	
Bolt grade	**8.8**	
Tension	**Partial penetration butt welds**	**8 mm**
Flange Welds	**Superimposed fillet welds**	**10 mm**
	Web fillet weld	**8 mm**
	Compression flange fillet weld	**8 mm**
Supporting column section	**254 x 254 x 73 UC**	
	Grade S 275	
Beam / Rafter section	**533 x 210 x 92 UB**	
	Grade S 275	

Column stiffener details

Compression stiffeners	**2/120 mm x 15 mm Grade S 275 connected by 4/8 mm fillet welds.**
Tension rib stiffeners	**Partial depth 10 mm thick For curtailment length refer to Clause 4.5.10. 2/100 mm wide placed midway between the following bolt rows: 1 and 2**

Location: Ex7 - Compression & tension web stiffeners

Bolted extended end plate connection - beam to column

Calculations are in accordance with BS5950-1:2000 and follow the procedure given in the SCI publication 207/95 entitled 'Joints in Steel Construction Moment Connections'.
Beams are connected to both column flanges. The web panel shear can be discounted in the determination of the compressive force as the connection is assumed to have balanced moments.

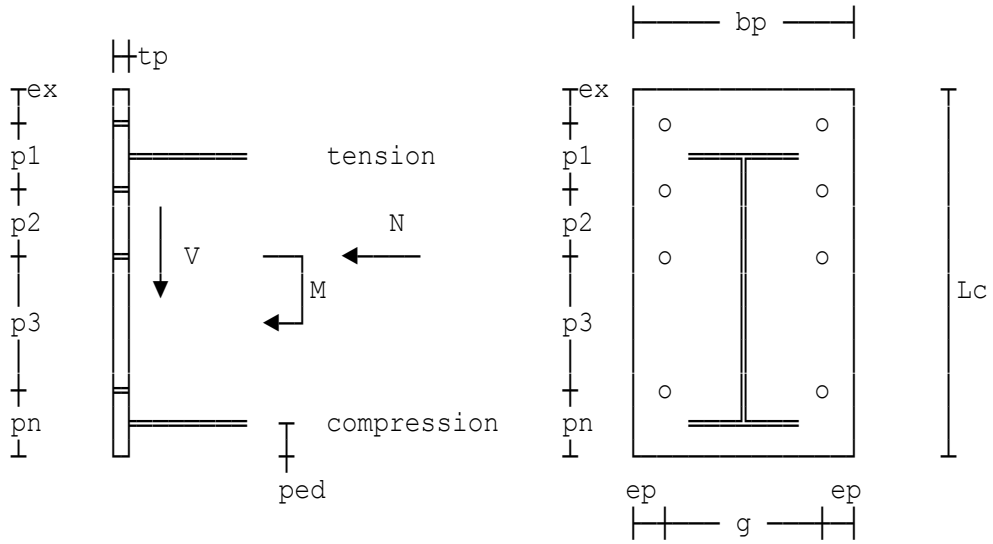

Factored moment	Ma=350 kNm
Factored shear force	V=80 kN
Axial force (+ve compression)	N=0 kN

254 x 254 x 73 UC.
533 x 210 x 92 UB.

Diameter of bolts	bd=24 mm
Thickness of plate	tp=25 mm
Total number of bolts	bn=8
Number of shear bolts	ns=2
Distance to first row of bolts	ex=50 mm
Distance to beam flange	x=40 mm
Pitch to second row of bolts	p1=100 mm
Pitch of tension bolts	p2=90 mm
Distance tension to shear bolts	p3=320 mm
Edge distance for shear bolts	pn=100 mm
Bolt cross-centres	g=100 mm
Width of end plate	bp=250 mm
Assumed web fillet weld size	sww=8 mm
Assumed flange fillet weld size	swf=12 mm

SUMMARY OF BOLT POTENTIAL RESISTANCES

Top row of bolts	Pr1=297.07 kN
Row 2	Pr2=231.52 kN
Row 3	Pr3=140.42 kN
Weld size	ss=8 mm
Stiffener width	bsgt=100 mm
Stiffener depth	Ls=180 mm
Proposed rib thickness	tsr=10 mm
Proposed weld size	ssr=10 mm
Selected fillet weld size	swt=10 mm
Selected fillet weld size	sfw=8 mm

Connection is considered to be suitable.

CONNECTION SUMMARY

Connection forms part of a two sided connection.

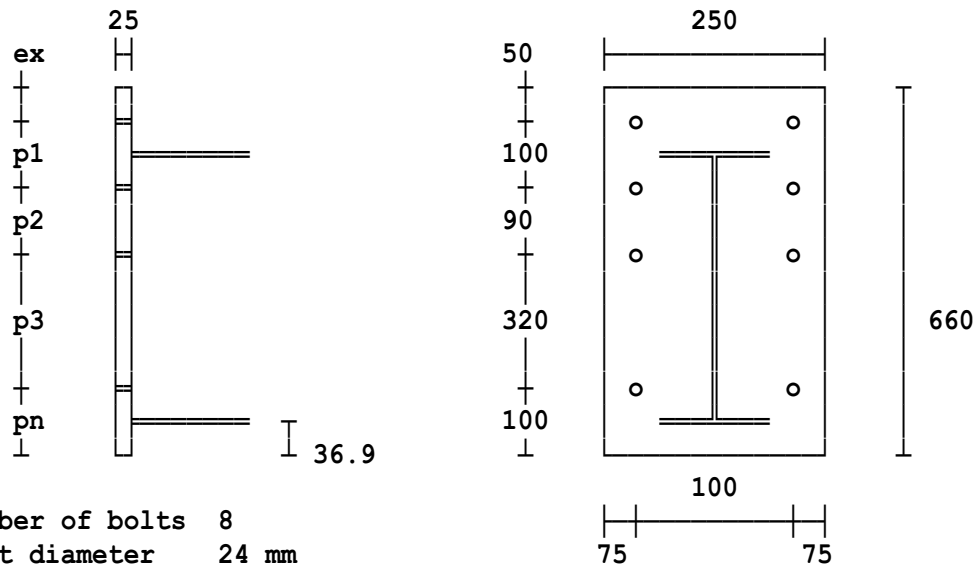

Number of bolts	**8**	
Bolt diameter	**24 mm**	
Bolt grade	**8.8**	
Welds	**Tension flange fillet weld**	**10 mm**
	Web fillet weld	**8 mm**
	Compression flange fillet weld	**8 mm**
Supporting column section	**254 x 254 x 73 UC**	
	Grade S 275	
Beam / Rafter section	**533 x 210 x 92 UB**	
	Grade S 275	

Column stiffener details

Compression stiffeners	**2/120 mm x 15 mm Grade S 275**
	connected by 4/8 mm fillet welds.
Tension rib stiffeners	**Partial depth 10 mm thick**
	For curtailment length refer
	to Clause 4.5.10.

2/100 mm wide placed midway between the following bolt rows:
1 and 2
2 and 3

Location: Ex8 - tension web stiffeners similar to example 1,6 & 7

Bolted extended end plate connection - beam to column

Calculations are in accordance with BS5950-1:2000 and follow the procedure given in the SCI publication 207/95 entitled 'Joints in Steel Construction Moment Connections'.
Beams are connected to both column flanges. The web panel shear can be discounted in the determination of the compressive force as the connection is assumed to have balanced moments.

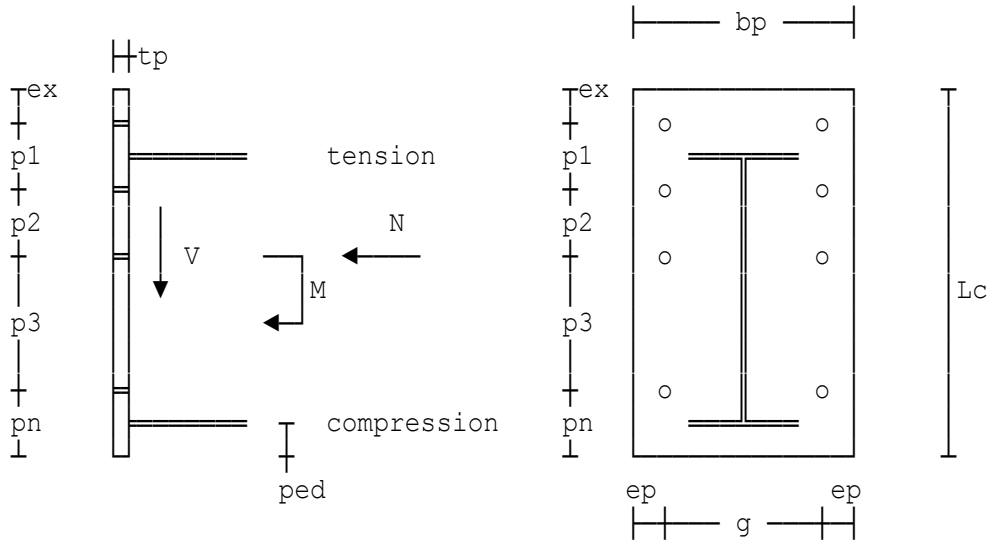

Factored moment	Ma=350 kNm
Factored shear force	V=60 kN
Axial force (+ve compression)	N=0 kN

254 x 254 x 73 UC.
533 x 210 x 92 UB.

Diameter of bolts	bd=24 mm
Thickness of plate	tp=25 mm
Total number of bolts	bn=8
Number of shear bolts	ns=2
Distance to first row of bolts	ex=50 mm
Distance to beam flange	x=40 mm
Pitch to second row of bolts	p1=100 mm
Pitch of tension bolts	p2=90 mm
Distance tension to shear bolts	p3=320 mm
Edge distance for shear bolts	pn=100 mm
Bolt cross-centres	g=100 mm
Width of end plate	bp=250 mm
Assumed web fillet weld size	sww=8 mm
Assumed flange fillet weld size	swf=12 mm

SUMMARY OF BOLT POTENTIAL RESISTANCES

Top row of bolts	Pr1=297.07 kN
Row 2	Pr2=231.52 kN
Row 3	Pr3=140.42 kN
Weld size	ss=8 mm
Stiffener width	bsgt=100 mm
Stiffener depth	Ls=180 mm
Proposed rib thickness	tsr=10 mm
Proposed weld size	ssr=10 mm
Penetration butt weld size	sbt=8 mm
Superimposed fillet weld size	swt=12 mm
Selected fillet weld size	sfw=8 mm

Connection is considered to be suitable.

CONNECTION SUMMARY

Connection forms part of a two sided connection.

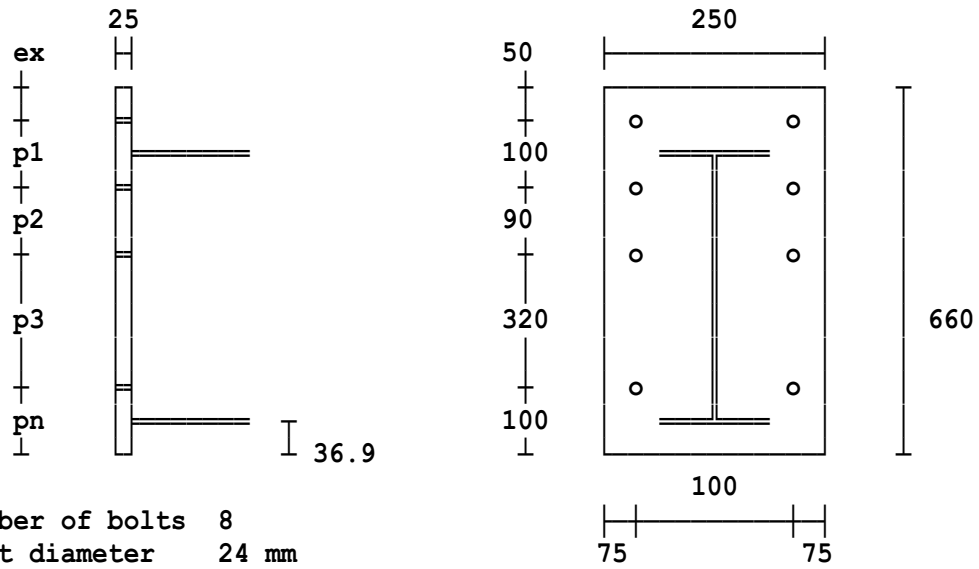

Number of bolts	**8**	
Bolt diameter	**24 mm**	
Bolt grade	**8.8**	
Tension	**Partial penetration butt welds**	**8 mm**
Flange Welds	**Superimposed fillet welds**	**12 mm**
	Web fillet weld	**8 mm**
	Compression flange fillet weld	**8 mm**
Supporting column section	**254 x 254 x 73 UC**	
	Grade S 275	
Beam / Rafter section	**533 x 210 x 92 UB**	
	Grade S 275	

Column stiffener details

Compression stiffeners	**2/120 mm x 15 mm Grade S 275 connected by 4/8 mm fillet welds.**
Tension rib stiffeners	**Partial depth 10 mm thick For curtailment length refer to Clause 4.5.10. 2/100 mm wide placed midway between the following bolt rows: 2 and 3**

Location: Ex9 - 6 rows of bolts with tension stiffeners

Bolted extended end plate connection - beam to column

Calculations are in accordance with BS5950-1:2000 and follow the procedure given in the SCI publication 207/95 entitled 'Joints in Steel Construction Moment Connections'.
The connection is one sided. The web panel shear cannot be discounted in the determination of the compressive force.

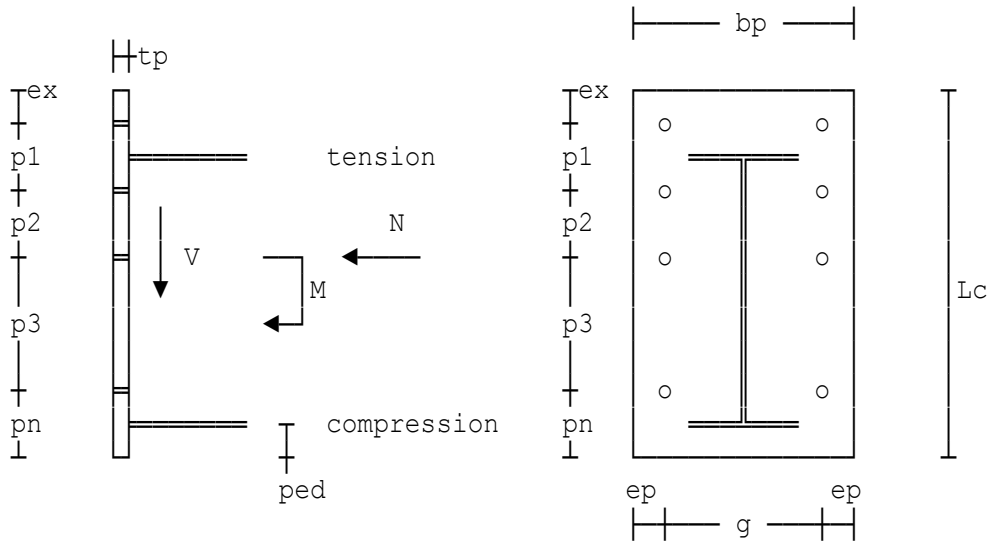

Factored moment	Ma=1004 kNm
Factored shear force	V=129 kN
Axial force (+ve compression)	N=-59 kN

610 x 305 x 149 UB.
762 x 267 x 134 UB.

Diameter of bolts	bd=24 mm
Thickness of plate	tp=25 mm
Total number of bolts	bn=14
Number of shear bolts	ns=2
Distance to first row of bolts	ex=50 mm
Distance to beam flange	x=40 mm
Pitch to second row of bolts	p1=100 mm
Pitch of tension bolts	p2=90 mm
Edge distance for shear bolts	pn=100 mm
Over-all length of end plate	Lc=880 mm
Bolt cross-centres	g=140 mm
Width of end plate	bp=280 mm
Assumed web fillet weld size	sww=8 mm
Assumed flange fillet weld size	swf=12 mm

SUMMARY OF BOLT POTENTIAL RESISTANCES

Top row of bolts	Pr1=357.31 kN
Row 2	Pr2=264.54 kN
Row 3	Pr3=260.05 kN
Row 4	Pr4=260.05 kN
Row 5	Pr5=225.11 kN
Row 6	Pr6=181.85 kN
Weld size	sc=6 mm
Weld size	ss=8 mm
Stiffener width	bsgt=110 mm
Proposed rib thickness	tsr=15 mm
Proposed weld size	ssr=10 mm
Penetration butt weld size	sbt=8 mm
Superimposed fillet weld size	swt=12 mm
Selected fillet weld size	sfw=8 mm

Connection is considered to be suitable.

CONNECTION SUMMARY

Connection is one sided beam to column arrangement.

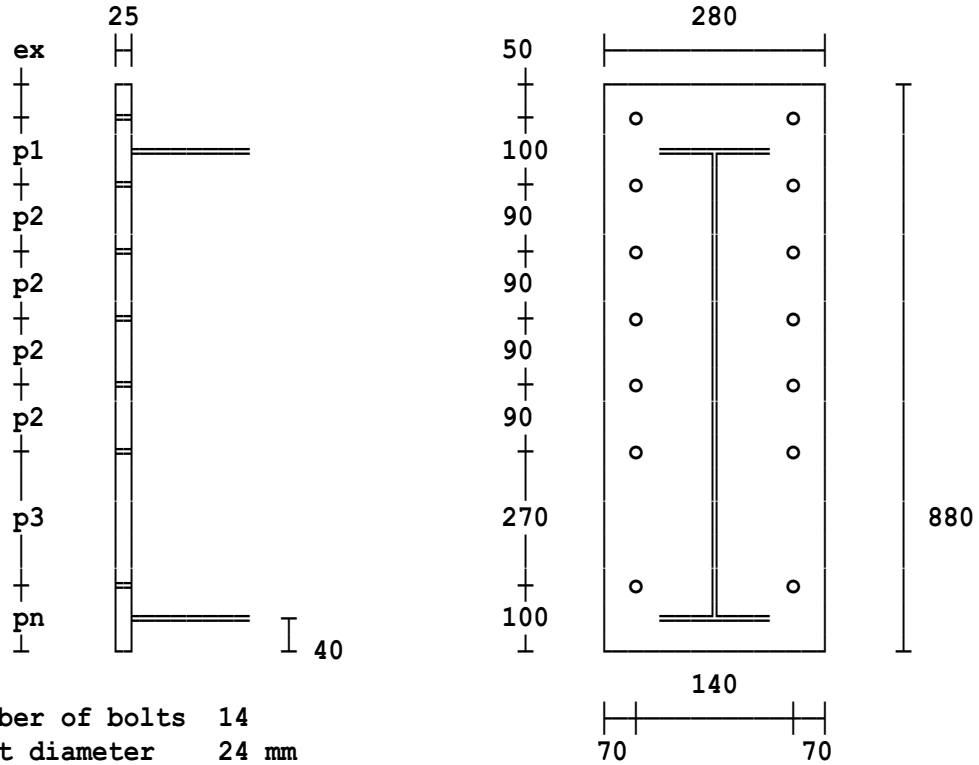

Number of bolts	**14**	
Bolt diameter	**24 mm**	
Bolt grade	**8.8**	
Tension	**Partial penetration butt welds**	**8 mm**
Flange Welds	**Superimposed fillet welds**	**12 mm**
	Web fillet weld	**8 mm**
	Compression flange fillet weld	**8 mm**

Supporting column section **610 x 305 x 149 UB**
Grade S 275

Beam / Rafter section **762 x 267 x 134 UB**
Grade S 275

Column stiffener details

Diagonal stiffeners	**2/145 mm x 10 mm Grade S 275 on line between the beam tension and compression flanges connected by 4/6 mm fillet welds.**
Compression stiffeners	**2/140 mm x 15 mm Grade S 275 connected by 4/8 mm fillet welds.**
Tension rib stiffeners	**Provide full depth stiffeners 15 mm thick midway between rows 1 and 2. Any remaining ribs are partial depth. For curtailment length refer to Clause 4.5.10 of the code. 2/110 mm wide placed midway between the following bolt rows: 1 and 2 2 and 3 3 and 4 4 and 5 5 and 6**

Location: Ex10 - as small as you can get

Bolted extended end plate connection - beam to column

Calculations are in accordance with BS5950-1:2000 and follow the procedure given in the SCI publication 207/95 entitled 'Joints in Steel Construction Moment Connections'.
The connection is one sided. The web panel shear cannot be discounted in the determination of the compressive force.

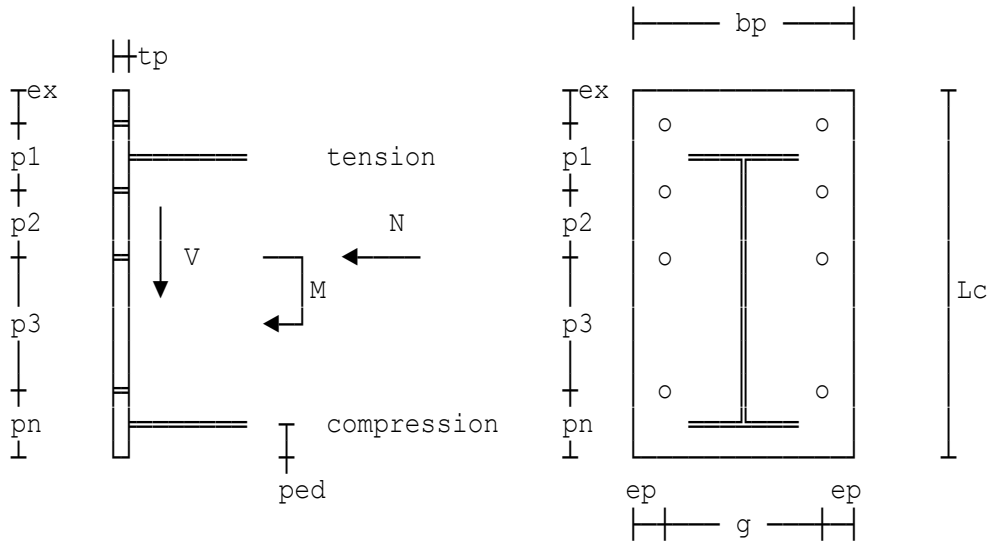

Factored moment	Ma=20.579 kNm
Factored shear force	V=12 kN
Axial force (+ve compression)	N=-8 kN

152 x 152 x 23 UC.
152 x 89 x 16 UB.

Diameter of bolts	bd=20 mm
Thickness of plate	tp=20 mm
Total number of bolts	bn=6
Number of shear bolts	ns=2
Distance to first row of bolts	ex=40 mm
Distance to beam flange	x=30 mm
Pitch to second row of bolts	p1=70 mm
Edge distance for shear bolts	pn=50 mm
Over-all length of end plate	Lc=250 mm
Bolt cross-centres	g=70 mm
Width of end plate	bp=130 mm
Assumed web fillet weld size	sww=6 mm
Assumed flange fillet weld size	swf=6 mm

SUMMARY OF BOLT POTENTIAL RESISTANCES

Top row of bolts	Pr1=75.971 kN
Row 2	Pr2=34.209 kN
Weld size	sc=6 mm
Stiffener width	bsgt=55 mm
Proposed rib thickness	tsr=10 mm
Proposed weld size	ssr=8 mm
Selected fillet weld size	swt=8 mm
Selected fillet weld size	sfw=8 mm

Connection is considered to be suitable.

CONNECTION SUMMARY

Connection is one sided beam to column arrangement.

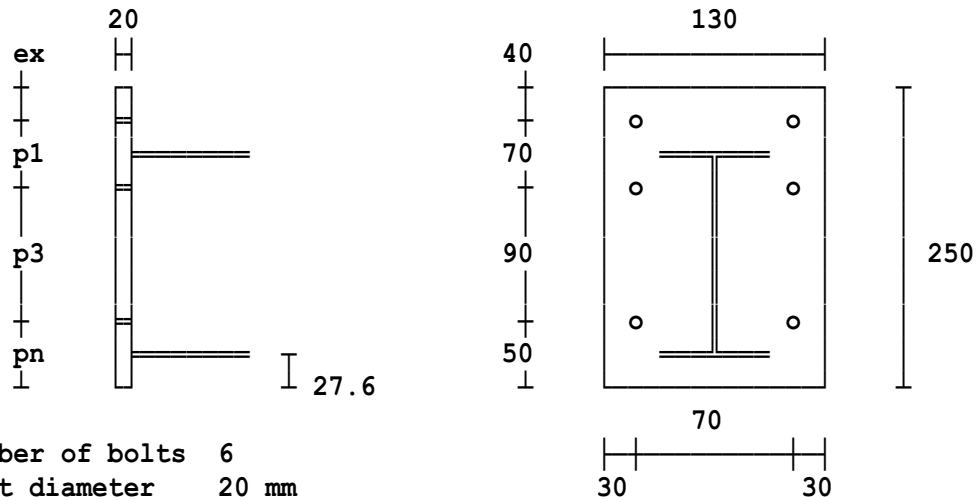

Number of bolts	**6**	
Bolt diameter	**20 mm**	
Bolt grade	**8.8**	
Welds	**Tension flange fillet weld**	**8 mm**
	Web fillet weld	**8 mm**
	Compression flange fillet weld	**6 mm**
Supporting column section	**152 x 152 x 23 UC**	
	Grade S 275	
Beam / Rafter section	**152 x 89 x 16 UB**	
	Grade S 275	

Column stiffener details

Diagonal stiffeners	**2/60 mm x 10 mm Grade S 275 on line between the beam tension and compression flanges connected by 4/6 mm fillet welds.**
Tension rib stiffeners	**Provide full depth stiffeners 10 mm thick midway between rows 1 and 2. Any remaining ribs are partial depth. For curtailment length refer to Clause 4.5.10 of the code.**

2/55 mm wide placed midway between the following bolt rows:
1 and 2

Location: Ex1 - Compression stiffener to supporting column

Bolted extended end plate connection - beam to column

Calculations are in accordance with EC3 Parts 1-1, 1-5, 1-8 and follow the procedure given in the SCI publication P398 entitled 'Joints in Steel Construction Moment-Resisting Joints to Eurocode 3'.
Beams are connected to both column flanges. The web panel shear can be discounted in the determination of the compressive force as the connection is assumed to have balanced moments.

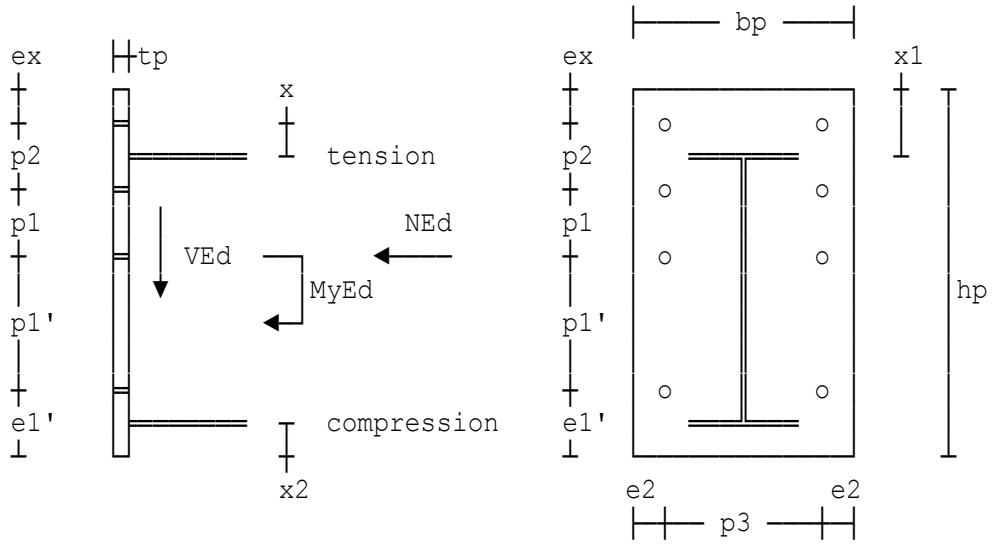

Factored moment	MyEd=405 kNm
Factored shear force	VEd=60 kN
Axial force (+ve compression)	NEd=0 kN

Supporting column details

254 x 254 x 107 UKC

Supported beam details

533 x 210 x 92 UKB

Bolt details

Diameter of bolts	db=24 mm
Tensile resistance (EC3 Part 1-8)	FtRd=k2*fub*At/(gamM2*10^3)=203.33 kN

End plate details

Thickness of plate	tp=25 mm
Total number of bolts	bn=8
Number of shear bolts	ns=2
Distance to first row of bolts	ex=50 mm
Distance to beam flange	x=40 mm
Pitch to second row of bolts	p2=100 mm
Pitch of tension bolts	p1=90 mm

Distance tension to shear bolts	p1'=320 mm
Edge distance for shear bolts	e1'=100 mm
Bolt cross-centres	p3=100 mm
Width of end plate	bp=250 mm
Assumed web fillet weld size	sww=8 mm
Assumed flange fillet weld size	swf=12 mm

SUMMARY OF BOLT POTENTIAL RESISTANCES

Top row of bolts	Pr1=377.26 kN
Row 2	Pr2=321.03 kN
Row 3	Pr3=292.53 kN
Design axial load on column	NEdc=500 kN
Resistance of beam flange	FcRdf=1257 kN
Weld size (leg length)	ss=8 mm
Penetration butt weld size	sbt=8 mm
Superimposed fillet weld size	swt=12 mm
Selected fillet weld size	sfw=8 mm

CONNECTION SUMMARY - all dimensions in diagram are in mm

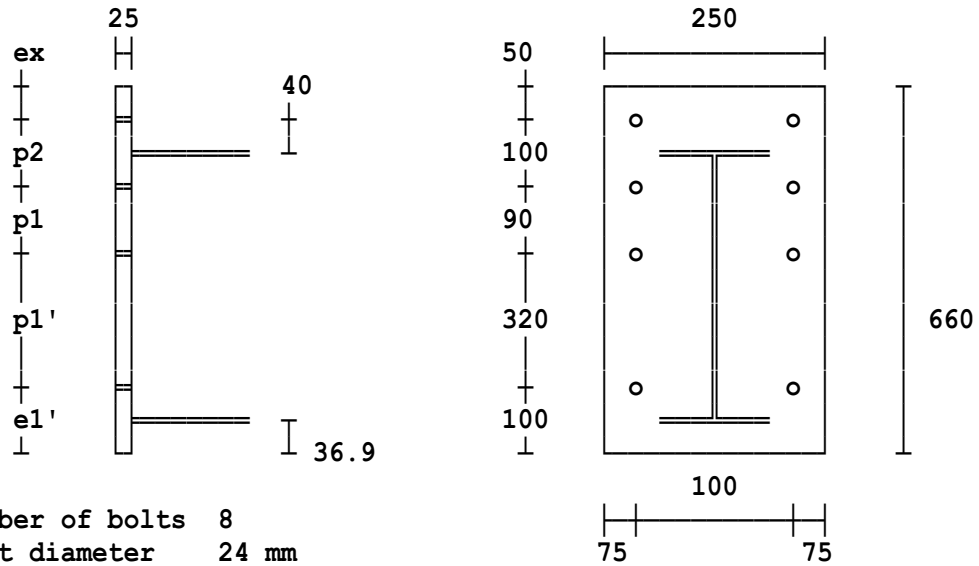

Number of bolts	**8**	
Bolt diameter	**24 mm**	
Bolt grade	**8.8**	
Tension	**Partial penetration butt welds**	**8 mm**
Flange Welds	**Superimposed fillet welds**	**12 mm**
	Web fillet weld	**8 mm**
	Compression flange fillet weld	**8 mm**
Supporting column section	**254 x 254 x 107 UKC**	
	Grade S 275	
Beam / Rafter section	**533 x 210 x 92 UKB**	
	Grade S 275	

Column stiffener details

Compression stiffeners	**2/120 mm x 15 mm Grade S 275 connected by 4/8 mm fillet welds.**

Location: Ex2 - Compression & tension stiffeners

Bolted extended end plate connection - beam to column

Calculations are in accordance with EC3 Parts 1-1, 1-5, 1-8 and follow the procedure given in the SCI publication P398 entitled 'Joints in Steel Construction Moment-Resisting Joints to Eurocode 3'.
Beams are connected to both column flanges. The web panel shear can be discounted in the determination of the compressive force as the connection is assumed to have balanced moments.

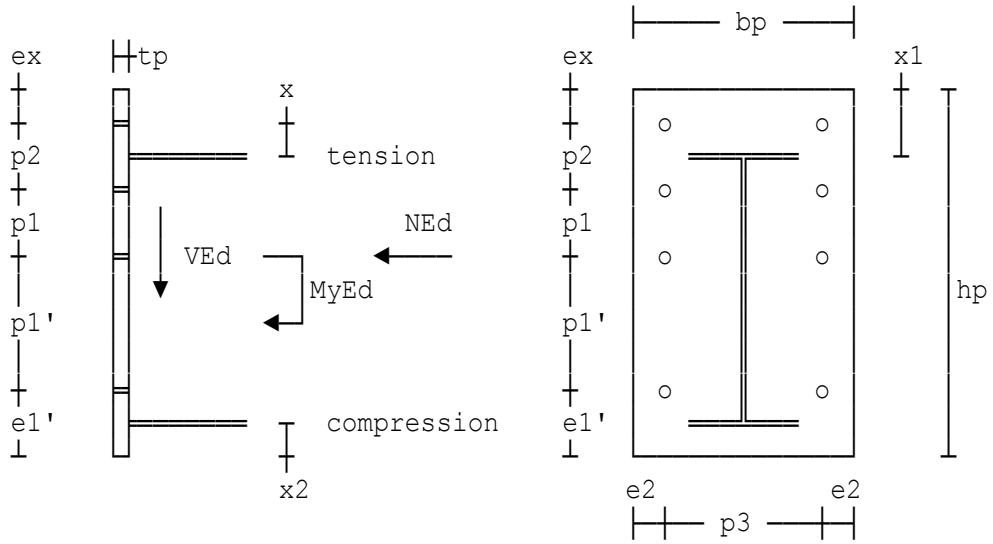

Factored moment	MyEd=778 kNm
Factored shear force	VEd=215 kN
Axial force (+ve compression)	NEd=100 kN

Supporting column details

254 x 254 x 107 UKC

Supported beam details

686 x 254 x 125 UKB

Bolt details

Diameter of bolts	db=24 mm
Tensile resistance (EC3 Part 1-8)	FtRd=k2*fub*At/(gamM2*10^3)=203.33 kN

End plate details

Thickness of plate	tp=25 mm
Total number of bolts	bn=14
Number of shear bolts	ns=2
Distance to first row of bolts	ex=50 mm
Distance to beam flange	x=40 mm
Pitch to second row of bolts	p2=100 mm
Pitch of tension bolts	p1=90 mm

Edge distance for shear bolts	e1'=100 mm
Over-all length of end plate	hp=805 mm
Bolt cross-centres	p3=100 mm
Width of end plate	bp=250 mm
Assumed web fillet weld size	sww=8 mm
Assumed flange fillet weld size	swf=12 mm

SUMMARY OF BOLT POTENTIAL RESISTANCES

Top row of bolts	Pr1=377.26 kN
Row 2	Pr2=321.03 kN
Row 3	Pr3=292.53 kN
Row 4	Pr4=292.53 kN
Row 5	Pr5=292.53 kN
Row 6	Pr6=292.53 kN
Design axial load on column	NEdc=500 kN
Resistance of beam flange	FcRdf=1502 kN
Weld size (leg length)	ss=15 mm
Selected fillet weld size	swt=15 mm
Selected fillet weld size	sfw=8 mm

CONNECTION SUMMARY - all dimensions in diagram are in mm

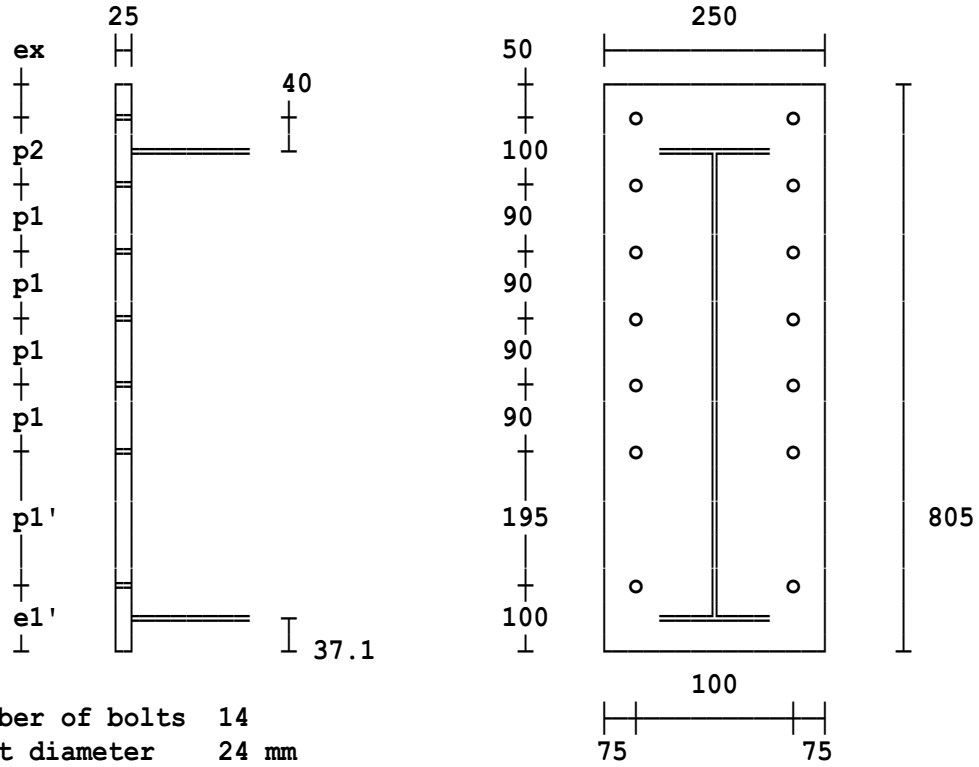

Number of bolts	**14**	
Bolt diameter	**24 mm**	
Bolt grade	**8.8**	
Welds	**Tension flange fillet weld**	**15 mm**
	Web fillet weld	**8 mm**
	Compression flange fillet weld	**8 mm**
Supporting column section	**254 x 254 x 107 UKC Grade S 275**	
Beam / Rafter section	**686 x 254 x 125 UKB Grade S 275**	

Column stiffener details

Compression stiffeners	**2/120 mm x 30 mm Grade S 275 connected by 4/15 mm fillet welds.**

Location: Ex3 - Using 'K' Stiffeners

Bolted extended end plate connection - beam to column

Calculations are in accordance with EC3 Parts 1-1, 1-5, 1-8 and follow the procedure given in the SCI publication P398 entitled 'Joints in Steel Construction Moment-Resisting Joints to Eurocode 3'.
The connection is one sided. The web panel shear cannot be discounted in the determination of the compressive force.

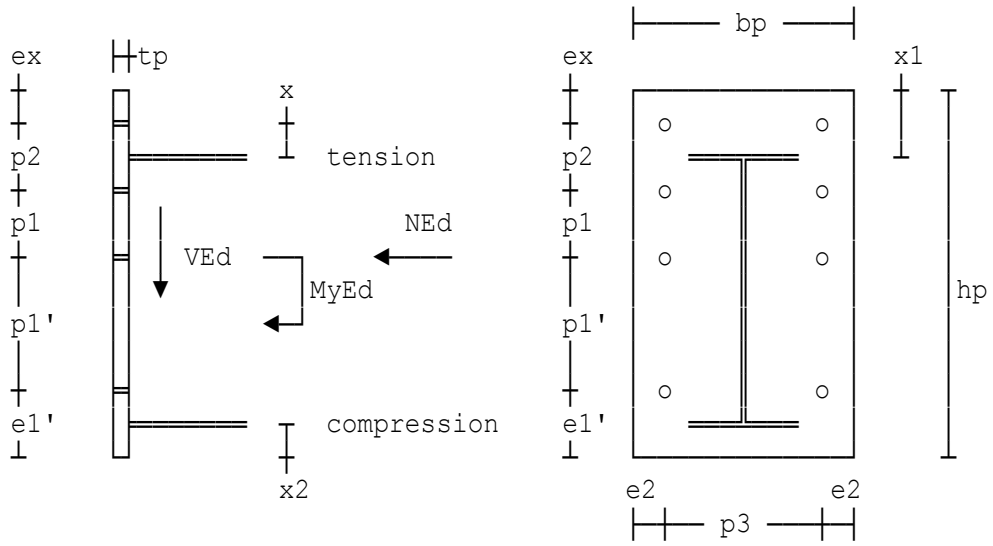

Factored moment	MyEd=680 kNm
Factored shear force	VEd=430 kN
Axial force (+ve compression)	NEd=-100 kN

Supporting column details

305 x 305 x 118 UKC

Supported beam details

762 x 267 x 134 UKB

Bolt details

Diameter of bolts	db=24 mm
Tensile resistance (EC3 Part 1-8)	FtRd=k2*fub*At/(gamM2*10^3)=203.33 kN

End plate details

Thickness of plate	tp=25 mm
Total number of bolts	bn=14
Number of shear bolts	ns=4
Distance to first row of bolts	ex=50 mm
Distance to beam flange	x=40 mm
Pitch to second row of bolts	p2=100 mm
Pitch of tension bolts	p1=90 mm
Edge distance for shear bolts	e1'=100 mm

Over-all length of end plate	hp=880 mm
Bolt cross-centres	p3=140 mm
Width of end plate	bp=300 mm
Assumed web fillet weld size	sww=8 mm
Assumed flange fillet weld size	swf=12 mm

SUMMARY OF BOLT POTENTIAL RESISTANCES

Top row of bolts	Pr1=349.85 kN
Row 2	Pr2=265.64 kN
Row 3	Pr3=261.67 kN
Row 4	Pr4=181.05 kN
Row 5	Pr5=160.88 kN
Design axial load on column	NEdc=500 kN
Resistance of beam flange	FcRdf=1577 kN
Weld size	sc=8 mm
Weld size (leg length)	ss=8 mm
Selected fillet weld size	swt=12 mm
Selected fillet weld size	sfw=10 mm
Penetration butt weld size	sbtc=9 mm
Superimposed fillet weld size	swtc=10 mm

CONNECTION SUMMARY - all dimensions in diagram are in mm

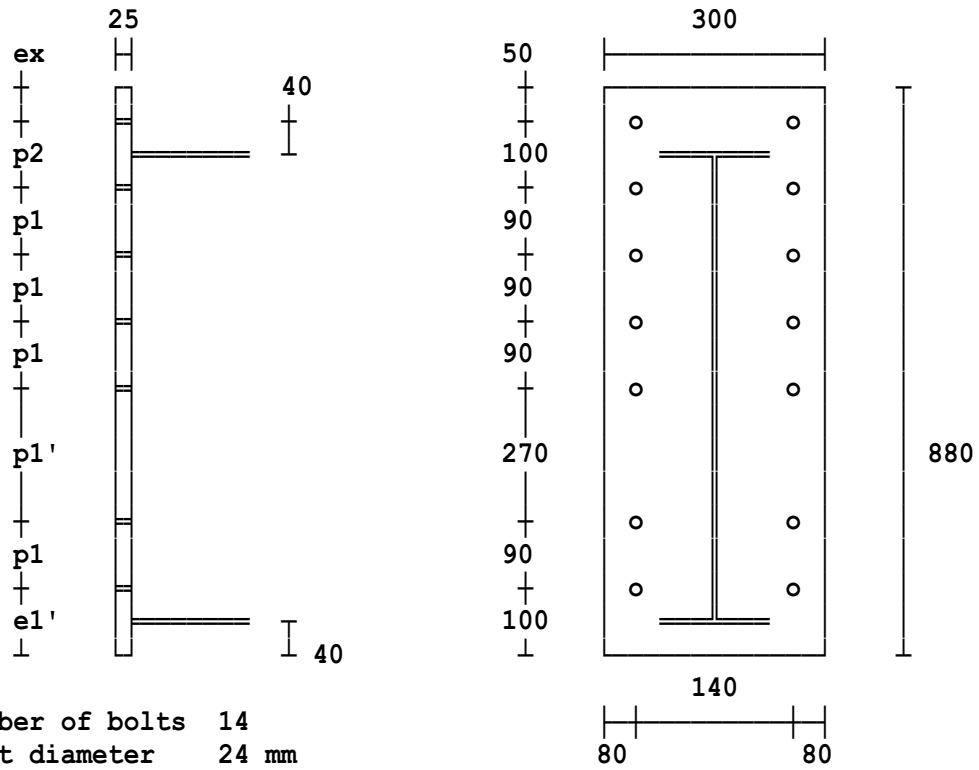

Number of bolts	**14**	
Bolt diameter	**24 mm**	
Bolt grade	**8.8**	
Welds	**Tension flange fillet weld**	**12 mm**
	Web fillet weld	**10 mm**
Compression	**Partial penetration butt welds**	**9 mm**
Flange Welds	**Superimposed fillet welds**	**10 mm**

Supporting column section	**305 x 305 x 118 UKC**
	Grade S 275
Beam / Rafter section	**762 x 267 x 134 UKB**
	Grade S 275

Column stiffener details

'K' stiffeners	**2/145 mm x 15 mm Grade S 275 on line between the beam tension and compression flanges connected by 4/8 mm fillet welds.**
Compression stiffeners	**2/145 mm x 15 mm Grade S 275 connected by 4/8 mm fillet welds.**

Location: Ex4 - Diagonal stiffeners also used for compression

Bolted extended end plate connection - beam to column

Calculations are in accordance with EC3 Parts 1-1, 1-5, 1-8 and follow the procedure given in the SCI publication P398 entitled 'Joints in Steel Construction Moment-Resisting Joints to Eurocode 3'.
The connection is one sided. The web panel shear cannot be discounted in the determination of the compressive force.

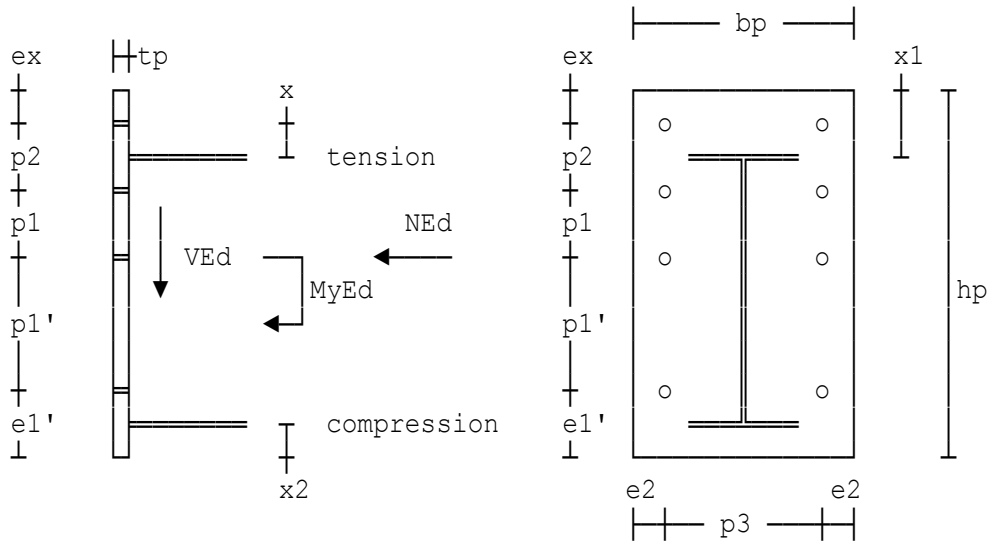

Factored moment	MyEd=370 kNm
Factored shear force	VEd=128 kN
Axial force (+ve compression)	NEd=120 kN

Supporting column details

305 x 305 x 97 UKC

Supported beam details

610 x 229 x 101 UKB

Bolt details

Diameter of bolts	db=24 mm
Tensile resistance (EC3 Part 1-8)	FtRd=k2*fub*At/(gamM2*10^3)=203.33 kN

End plate details

Thickness of plate	tp=25 mm
Total number of bolts	bn=8
Number of shear bolts	ns=2
Distance to first row of bolts	ex=50 mm
Distance to beam flange	x=40 mm
Pitch to second row of bolts	p2=100 mm
Pitch of tension bolts	p1=90 mm
Edge distance for shear bolts	e1'=100 mm

Over-all length of end plate	hp=730 mm
Bolt cross-centres	p3=140 mm
Width of end plate	bp=300 mm
Assumed web fillet weld size	sww=8 mm
Assumed flange fillet weld size	swf=10 mm

SUMMARY OF BOLT POTENTIAL RESISTANCES

Top row of bolts	Pr1=312.2 kN
Row 2	Pr2=199.38 kN
Row 3	Pr3=110.98 kN
Design axial load on column	NEdc=500 kN
Resistance of beam flange	FcRdf=1296 kN
Weld size	sc=6 mm
Selected fillet weld size	swt=10 mm
Selected fillet weld size	sfw=10 mm

CONNECTION SUMMARY - all dimensions in diagram are in mm

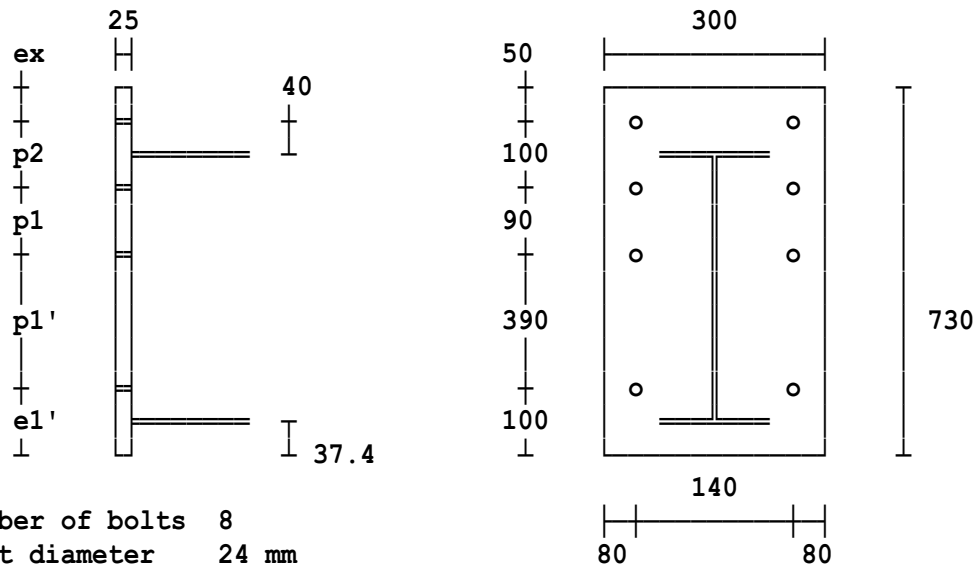

Number of bolts	**8**
Bolt diameter	**24 mm**
Bolt grade	**Preloaded HSFG bolts**
	General grade (8.8) with grade 10 nuts.
Welds	**Tension flange fillet weld 10 mm**
	Web fillet weld 10 mm
	Compression flange fillet weld 10 mm
Supporting column section	**305 x 305 x 97 UKC**
	Grade S 275
Beam / Rafter section	**610 x 229 x 101 UKB**
	Grade S 275

Column stiffener details

Diagonal stiffeners	**2/145 mm x 20 mm Grade S 275 on line between the beam tension and compression flanges connected by 4/6 mm fillet welds. Diagonal stiffeners also act as compression stiffeners.**

Location: Ex5 - Backing plates example

Bolted extended end plate connection - beam to column

Calculations are in accordance with EC3 Parts 1-1, 1-5, 1-8 and follow the procedure given in the SCI publication P398 entitled 'Joints in Steel Construction Moment-Resisting Joints to Eurocode 3'.
Beams are connected to both column flanges. The web panel shear can be discounted in the determination of the compressive force as the connection is assumed to have balanced moments.

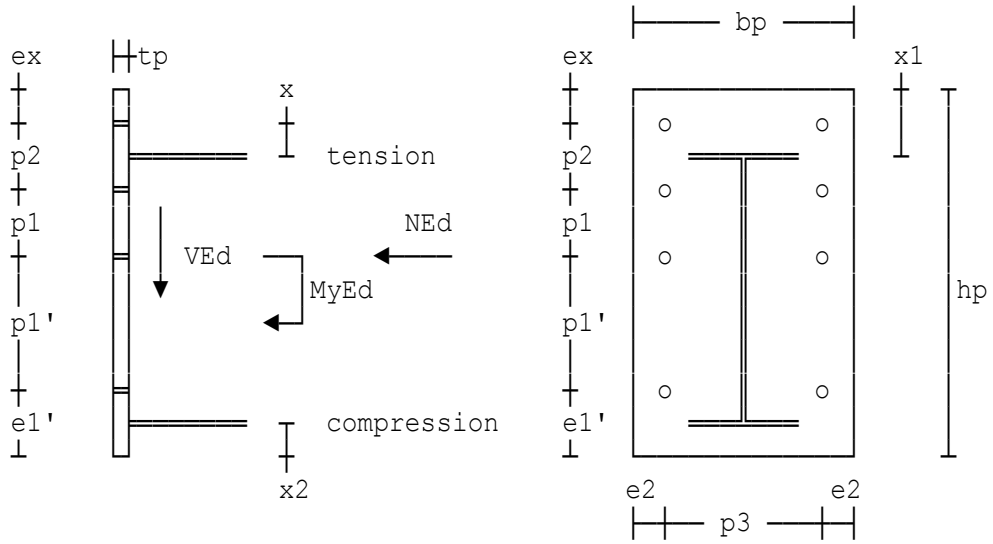

Factored moment	MyEd=630 kNm
Factored shear force	VEd=215 kN
Axial force (+ve compression)	NEd=200 kN

Supporting column details

305 x 305 x 97 UKC

Supported beam details

686 x 254 x 140 UKB

Bolt details

Diameter of bolts	db=24 mm
Tensile resistance (EC3 Part 1-8)	FtRd=k2*fub*At/(gamM2*10^3)=203.33 kN

End plate details

Thickness of plate	tp=25 mm
Total number of bolts	bn=14
Number of shear bolts	ns=2
Distance to first row of bolts	ex=50 mm
Distance to beam flange	x=40 mm
Pitch to second row of bolts	p2=100 mm
Pitch of tension bolts	p1=90 mm

Edge distance for shear bolts	e1'=100 mm
Over-all length of end plate	hp=815 mm
Bolt cross-centres	p3=140 mm
Width of end plate	bp=280 mm
Assumed web fillet weld size	sww=8 mm
Assumed flange fillet weld size	swf=12 mm

SUMMARY OF BOLT POTENTIAL RESISTANCES

Top row of bolts	Pr1=312.2 kN
Row 2	Pr2=199.38 kN
Row 3	Pr3=110.98 kN
Row 4	Pr4=110.98 kN
Row 5	Pr5=110.98 kN
Row 6	Pr6=110.98 kN
Design axial load on column	NEdc=500 kN
Resistance of beam flange	FcRdf=1788 kN
Weld size (leg length)	ss=10 mm
Thickness of backing plate	tbp=15 mm
Width of backing plate	bbp=145 mm
Length	Lbp=780 mm
Selected fillet weld size	swt=12 mm
Selected fillet weld size	sfw=10 mm

CONNECTION SUMMARY - all dimensions in diagram are in mm

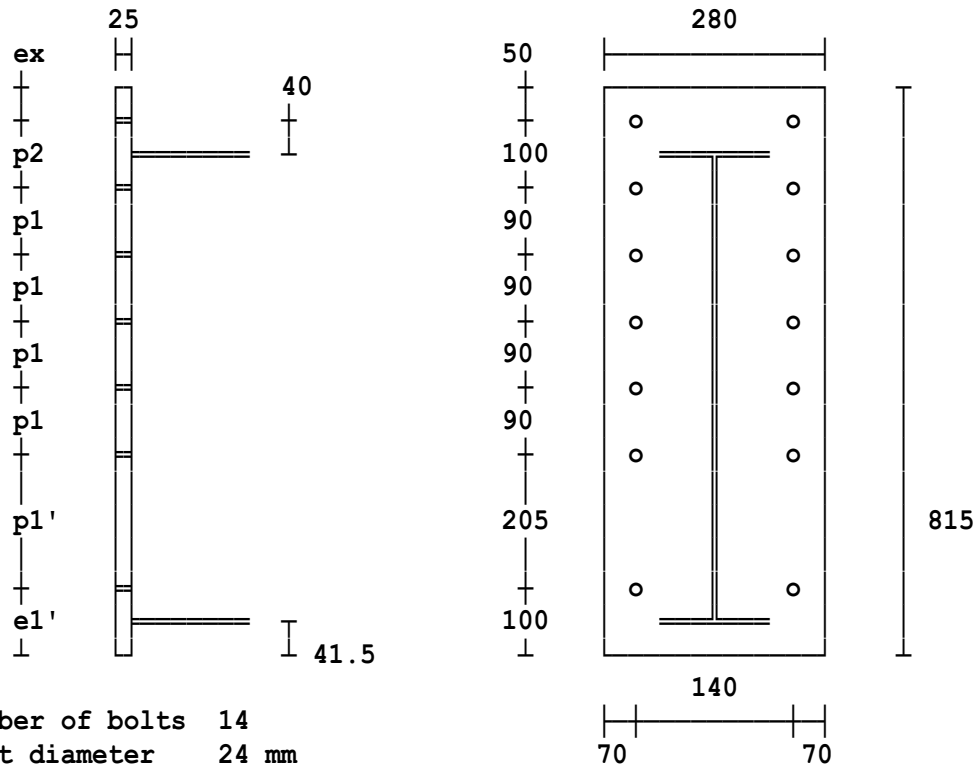

Number of bolts	**14**	
Bolt diameter	**24 mm**	
Bolt grade	**8.8**	
Welds	**Tension flange fillet weld**	**12 mm**
	Web fillet weld	**10 mm**
	Compression flange fillet weld	**8 mm**
Supporting column section	**305 x 305 x 97 UKC**	
	Grade S 275	
Beam / Rafter section	**686 x 254 x 140 UKB**	

Grade S 275

Column stiffener details

Compression stiffeners	**2/140 mm x 20 mm Grade S 275 connected by 4/10 mm fillet welds.**
Backing plates	**2/15 mm x 145 mm x 780 mm Grade S 275**

Location: Ex6 - Compression and tension stiffeners

Bolted extended end plate connection - beam to column

Calculations are in accordance with EC3 Parts 1-1, 1-5, 1-8 and follow the procedure given in the SCI publication P398 entitled 'Joints in Steel Construction Moment-Resisting Joints to Eurocode 3'.
Beams are connected to both column flanges. The web panel shear can be discounted in the determination of the compressive force as the connection is assumed to have balanced moments.

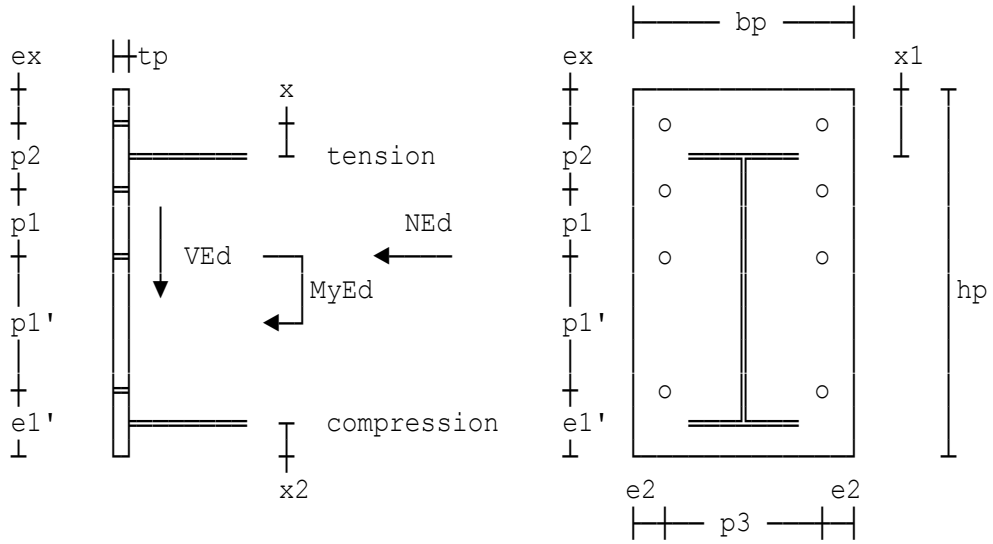

Factored moment	MyEd=350 kNm
Factored shear force	VEd=60 kN
Axial force (+ve compression)	NEd=0 kN

Supporting column details

254 x 254 x 73 UKC

Supported beam details

533 x 210 x 92 UKB

Bolt details

Diameter of bolts	db=24 mm
Tensile resistance (EC3 Part 1-8)	FtRd=k2*fub*At/(gamM2*10^3)=203.33 kN

End plate details

Thickness of plate	tp=25 mm
Total number of bolts	bn=8
Number of shear bolts	ns=2
Distance to first row of bolts	ex=50 mm
Distance to beam flange	x=40 mm
Pitch to second row of bolts	p2=100 mm
Pitch of tension bolts	p1=90 mm

Distance tension to shear bolts	p1'=320 mm
Edge distance for shear bolts	e1'=100 mm
Bolt cross-centres	p3=100 mm
Width of end plate	bp=250 mm
Assumed web fillet weld size	sww=8 mm
Assumed flange fillet weld size	swf=12 mm

SUMMARY OF BOLT POTENTIAL RESISTANCES

Top row of bolts	Pr1=303.34 kN
Row 2	Pr2=225.24 kN
Row 3	Pr3=140.42 kN
Design axial load on column	NEdc=500 kN
Resistance of beam flange	FcRdf=1257 kN
Weld size (leg length)	ss=8 mm
Stiffener width	bsgt=100 mm
Stiffener depth	Ls=180 mm
Proposed rib thickness	tsr=10 mm
Proposed weld size	ssr=10 mm
Penetration butt weld size	sbt=8 mm
Superimposed fillet weld size	swt=10 mm
Selected fillet weld size	sfw=8 mm

CONNECTION SUMMARY - all dimensions in diagram are in mm

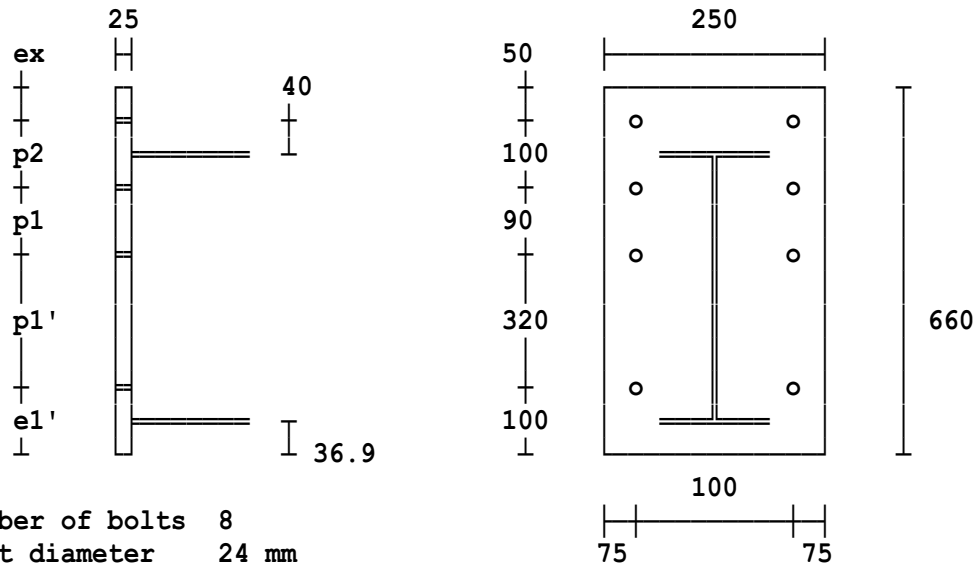

Number of bolts	**8**	
Bolt diameter	**24 mm**	
Bolt grade	**8.8**	
Tension	**Partial penetration butt welds**	**8 mm**
Flange Welds	**Superimposed fillet welds**	**10 mm**
	Web fillet weld	**8 mm**
	Compression flange fillet weld	**8 mm**
Supporting column section	**254 x 254 x 73 UKC**	
	Grade S 275	
Beam / Rafter section	**533 x 210 x 92 UKB**	
	Grade S 275	

Column stiffener details

Compression stiffeners	**2/120 mm x 15 mm Grade S 275 connected by 4/8 mm fillet welds.**
Tension stiffeners	**Partial depth 10 mm thick. For curtailment length see code. 2/100 mm wide placed midway between the following bolt rows: 1 and 2**

Location: Ex7 - Tension web stiffeners

Bolted extended end plate connection - beam to column

Calculations are in accordance with EC3 Parts 1-1, 1-5, 1-8 and follow the procedure given in the SCI publication P398 entitled 'Joints in Steel Construction Moment-Resisting Joints to Eurocode 3'.
Beams are connected to both column flanges. The web panel shear can be discounted in the determination of the compressive force as the connection is assumed to have balanced moments.

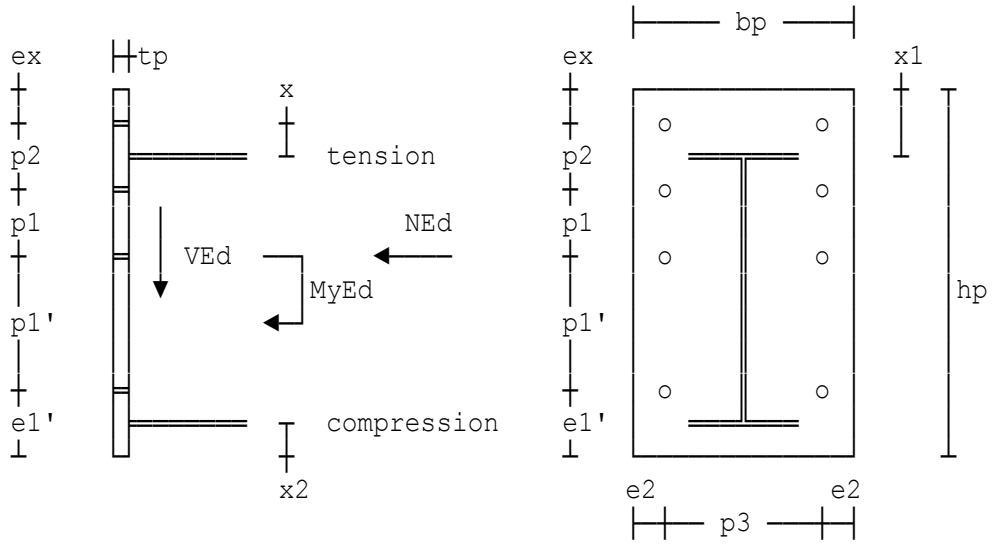

Factored moment	MyEd=360 kNm
Factored shear force	VEd=80 kN
Axial force (+ve compression)	NEd=0 kN

Supporting column details

254 x 254 x 73 UKC

Supported beam details

533 x 210 x 92 UKB

Bolt details

Diameter of bolts	db=24 mm
Tensile resistance (EC3 Part 1-8)	FtRd=k2*fub*At/(gamM2*10^3)=203.33 kN

End plate details

Thickness of plate	tp=25 mm
Total number of bolts	bn=8
Number of shear bolts	ns=2
Distance to first row of bolts	ex=50 mm
Distance to beam flange	x=40 mm
Pitch to second row of bolts	p2=100 mm
Pitch of tension bolts	p1=90 mm

Distance tension to shear bolts	p1'=320 mm
Edge distance for shear bolts	e1'=100 mm
Bolt cross-centres	p3=100 mm
Width of end plate	bp=250 mm
Assumed web fillet weld size	sww=8 mm
Assumed flange fillet weld size	swf=12 mm

SUMMARY OF BOLT POTENTIAL RESISTANCES

Top row of bolts	Pr1=303.34 kN
Row 2	Pr2=225.24 kN
Row 3	Pr3=140.42 kN
Design axial load on column	NEdc=500 kN
Resistance of beam flange	FcRdf=1257 kN
Weld size (leg length)	ss=8 mm
Stiffener width	bsgt=100 mm
Stiffener depth	Ls=180 mm
Proposed rib thickness	tsr=10 mm
Proposed weld size	ssr=10 mm
Selected fillet weld size	swt=12 mm
Selected fillet weld size	sfw=8 mm

CONNECTION SUMMARY - all dimensions in diagram are in mm

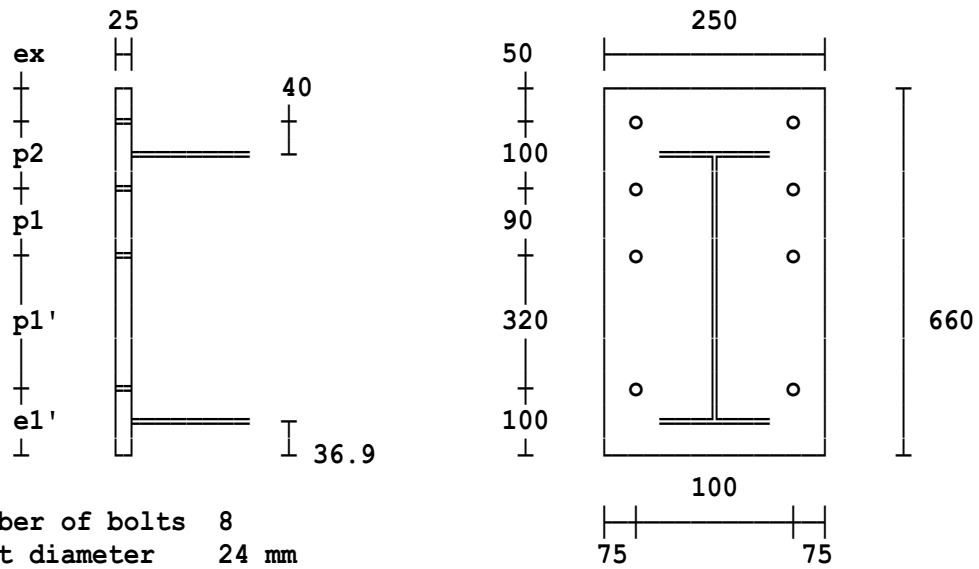

Number of bolts	**8**	
Bolt diameter	**24 mm**	
Bolt grade	**8.8**	
Welds	**Tension flange fillet weld**	**12 mm**
	Web fillet weld	**8 mm**
	Compression flange fillet weld	**8 mm**
Supporting column section	**254 x 254 x 73 UKC**	
	Grade S 275	
Beam / Rafter section	**533 x 210 x 92 UKB**	
	Grade S 275	

Column stiffener details

Compression stiffeners	**2/120 mm x 15 mm Grade S 275 connected by 4/8 mm fillet welds.**
Tension stiffeners	**Partial depth 10 mm thick. For curtailment length see code. 2/100 mm wide placed midway between the following bolt rows: 1 and 2 2 and 3**

Location: Ex8 - Compression and tension stiffeners

Bolted extended end plate connection - beam to column

Calculations are in accordance with EC3 Parts 1-1, 1-5, 1-8 and follow the procedure given in the SCI publication P398 entitled 'Joints in Steel Construction Moment-Resisting Joints to Eurocode 3'.
Beams are connected to both column flanges. The web panel shear can be discounted in the determination of the compressive force as the connection is assumed to have balanced moments.

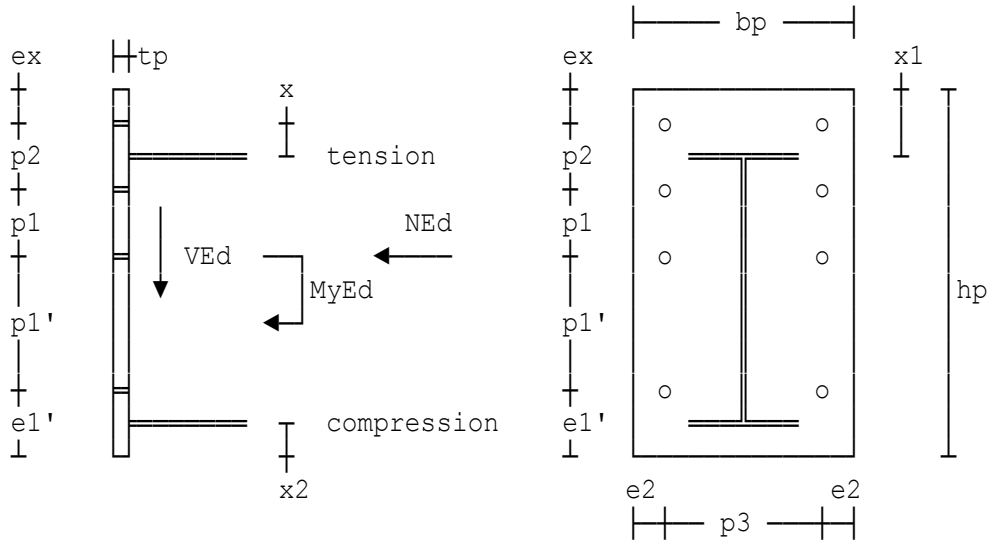

Factored moment	MyEd=350 kNm
Factored shear force	VEd=60 kN
Axial force (+ve compression)	NEd=0 kN

Supporting column details

254 x 254 x 73 UKC

Supported beam details

533 x 210 x 92 UKB

Bolt details

Diameter of bolts	db=24 mm
Tensile resistance (EC3 Part 1-8)	FtRd=k2*fub*At/(gamM2*10^3)=203.33 kN

End plate details

Thickness of plate	tp=25 mm
Total number of bolts	bn=8
Number of shear bolts	ns=2
Distance to first row of bolts	ex=50 mm
Distance to beam flange	x=40 mm
Pitch to second row of bolts	p2=100 mm
Pitch of tension bolts	p1=90 mm

Distance tension to shear bolts	p1'=320 mm
Edge distance for shear bolts	e1'=100 mm
Bolt cross-centres	p3=100 mm
Width of end plate	bp=250 mm
Assumed web fillet weld size	sww=8 mm
Assumed flange fillet weld size	swf=12 mm

SUMMARY OF BOLT POTENTIAL RESISTANCES

Top row of bolts	Pr1=303.34 kN
Row 2	Pr2=225.24 kN
Row 3	Pr3=140.42 kN
Design axial load on column	NEdc=500 kN
Resistance of beam flange	FcRdf=1257 kN
Weld size (leg length)	ss=8 mm
Stiffener width	bsgt=100 mm
Stiffener depth	Ls=180 mm
Proposed rib thickness	tsr=10 mm
Proposed weld size	ssr=10 mm
Penetration butt weld size	sbt=8 mm
Superimposed fillet weld size	swt=12 mm
Selected fillet weld size	sfw=8 mm

CONNECTION SUMMARY - all dimensions in diagram are in mm

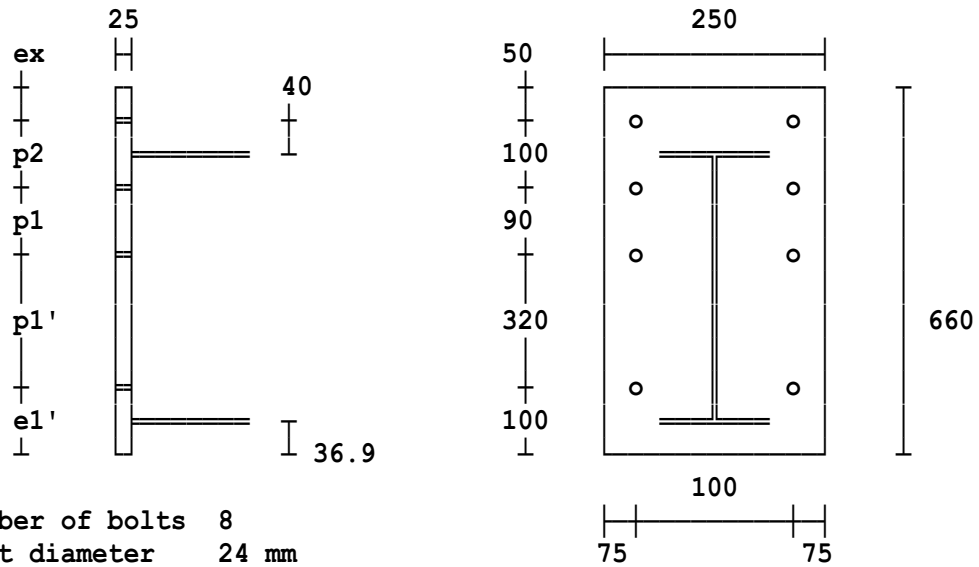

Number of bolts	**8**	
Bolt diameter	**24 mm**	
Bolt grade	**8.8**	
Tension	**Partial penetration butt welds**	**8 mm**
Flange Welds	**Superimposed fillet welds**	**12 mm**
	Web fillet weld	**8 mm**
	Compression flange fillet weld	**8 mm**
Supporting column section	**254 x 254 x 73 UKC**	
	Grade S 275	
Beam / Rafter section	**533 x 210 x 92 UKB**	
	Grade S 275	

Column stiffener details

Compression stiffeners	**2/120 mm x 15 mm Grade S 275 connected by 4/8 mm fillet welds.**
Tension stiffeners	**Partial depth 10 mm thick. For curtailment length see code. 2/100 mm wide placed midway between the following bolt rows: 2 and 3**

Location: Ex9 - Shear, Compression & Tension stiffeners provided

Bolted extended end plate connection - beam to column

Calculations are in accordance with EC3 Parts 1-1, 1-5, 1-8 and follow the procedure given in the SCI publication P398 entitled 'Joints in Steel Construction Moment-Resisting Joints to Eurocode 3'.
The connection is one sided. The web panel shear cannot be discounted in the determination of the compressive force.

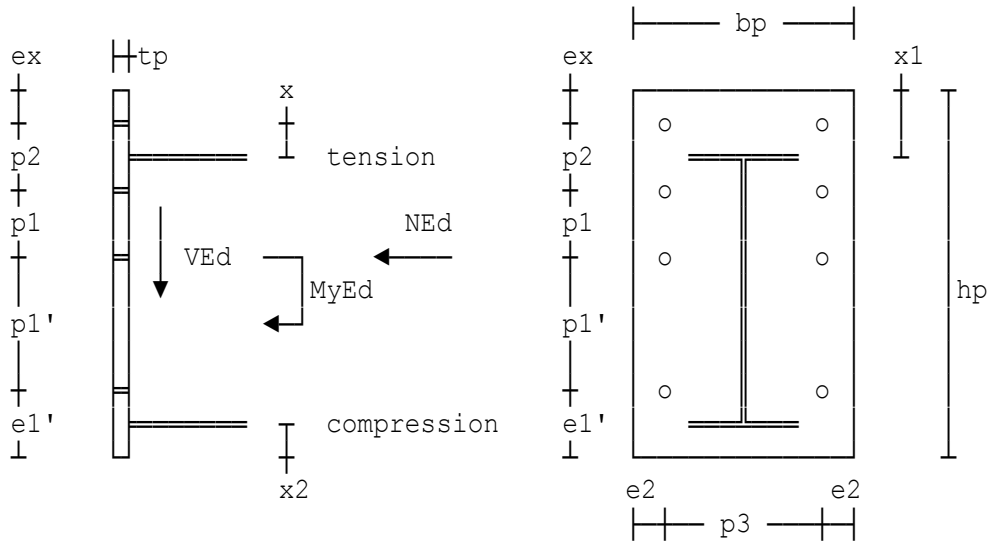

Factored moment	MyEd=1004 kNm
Factored shear force	VEd=129 kN
Axial force (+ve compression)	NEd=-59 kN

Supporting column details

610 x 305 x 149 UKB

Supported beam details

762 x 267 x 134 UKB

Bolt details

Diameter of bolts	db=24 mm
Tensile resistance (EC3 Part 1-8)	FtRd=k2*fub*At/(gamM2*10^3)=203.33 kN

End plate details

Thickness of plate	tp=25 mm
Total number of bolts	bn=14
Number of shear bolts	ns=2
Distance to first row of bolts	ex=50 mm
Distance to beam flange	x=40 mm
Pitch to second row of bolts	p2=100 mm
Pitch of tension bolts	p1=90 mm
Edge distance for shear bolts	e1'=100 mm

Over-all length of end plate	hp=880 mm
Bolt cross-centres	p3=140 mm
Width of end plate	bp=280 mm
Assumed web fillet weld size	sww=8 mm
Assumed flange fillet weld size	swf=12 mm

SUMMARY OF BOLT POTENTIAL RESISTANCES

Top row of bolts	Pr1=363.58 kN
Row 2	Pr2=270.82 kN
Row 3	Pr3=266.33 kN
Row 4	Pr4=266.33 kN
Row 5	Pr5=200.01 kN
Row 6	Pr6=181.85 kN
Design axial load on column	NEdc=500 kN
Resistance of beam flange	FcRdf=1577 kN
Weld size	sc=6 mm
Weld size (leg length)	ss=8 mm
Stiffener width	bsgt=110 mm
Proposed rib thickness	tsr=15 mm
Proposed weld size	ssr=12 mm
Penetration butt weld size	sbt=8 mm
Superimposed fillet weld size	swt=12 mm
Selected fillet weld size	sfw=8 mm

CONNECTION SUMMARY - all dimensions in diagram are in mm

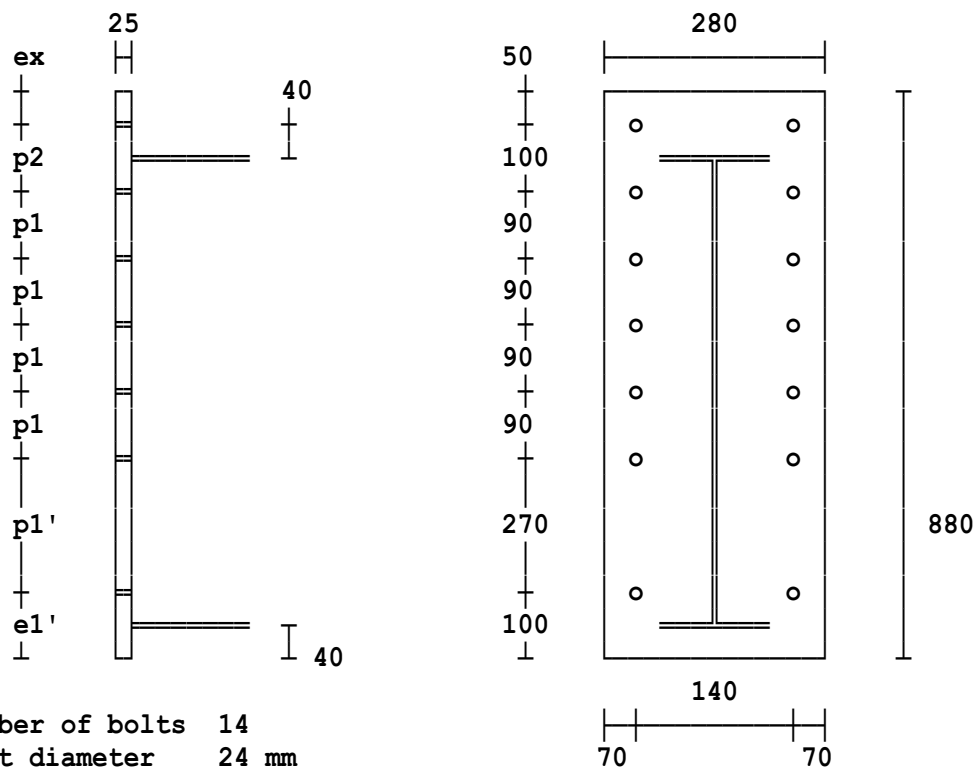

Number of bolts	**14**	
Bolt diameter	**24 mm**	
Bolt grade	**8.8**	
Tension	**Partial penetration butt welds**	**8 mm**
Flange Welds	**Superimposed fillet welds**	**12 mm**
	Web fillet weld	**8 mm**
	Compression flange fillet weld	**8 mm**

Supporting column section	**610 x 305 x 149 UKB** **Grade S 275**
Beam / Rafter section	**762 x 267 x 134 UKB** **Grade S 275**

Column stiffener details

Diagonal stiffeners	**2/145 mm x 10 mm Grade S 275 on line between the beam tension and compression flanges connected by 4/6 mm fillet welds.**
Compression stiffeners	**2/145 mm x 20 mm Grade S 275 connected by 4/8 mm fillet welds.**
Tension stiffeners	**Provide full depth stiffeners 15 mm thick midway between rows 1 and 2. Any remaining ribs are partial depth. For curtailment length see code. 2/110 mm wide placed midway between the following bolt rows:** **1 and 2** **2 and 3** **3 and 4** **4 and 5** **5 and 6**

Location: Ex10 - Diagonal shear stiffeners & tension stiffeners

Bolted extended end plate connection - beam to column

Calculations are in accordance with EC3 Parts 1-1, 1-5, 1-8 and follow the procedure given in the SCI publication P398 entitled 'Joints in Steel Construction Moment-Resisting Joints to Eurocode 3'.
The connection is one sided. The web panel shear cannot be discounted in the determination of the compressive force.

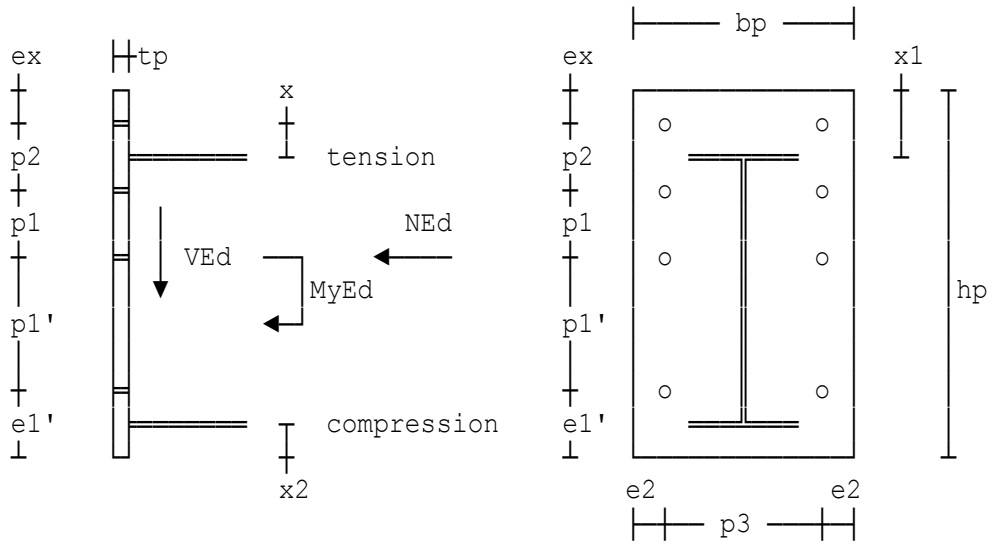

Factored moment	MyEd=20.579 kNm
Factored shear force	VEd=12 kN
Axial force (+ve compression)	NEd=-8 kN

Supporting column details

152 x 152 x 23 UKC

Supported beam details

152 x 89 x 16 UKB

Bolt details

Diameter of bolts	db=20 mm
Tensile resistance (EC3 Part 1-8)	FtRd=k2*fub*At/(gamM2*10^3)=141.12 kN

End plate details

Thickness of plate	tp=20 mm
Total number of bolts	bn=6
Number of shear bolts	ns=2
Distance to first row of bolts	ex=40 mm
Distance to beam flange	x=30 mm
Pitch to second row of bolts	p2=70 mm
Edge distance for shear bolts	e1'=50 mm
Over-all length of end plate	hp=250 mm

Bolt cross-centres	p3=70 mm
Width of end plate	bp=130 mm
Assumed web fillet weld size	sww=6 mm
Assumed flange fillet weld size	swf=6 mm

SUMMARY OF BOLT POTENTIAL RESISTANCES

Top row of bolts	Pr1=75.971 kN
Row 2	Pr2=34.209 kN
Design axial load on column	NEdc=500 kN
Resistance of beam flange	FcRdf=263 kN
Weld size	sc=6 mm
Stiffener width	bsgt=55 mm
Proposed rib thickness	tsr=10 mm
Proposed weld size	ssr=8 mm
Selected fillet weld size	swt=8 mm
Selected fillet weld size	sfw=8 mm

CONNECTION SUMMARY - all dimensions in diagram are in mm

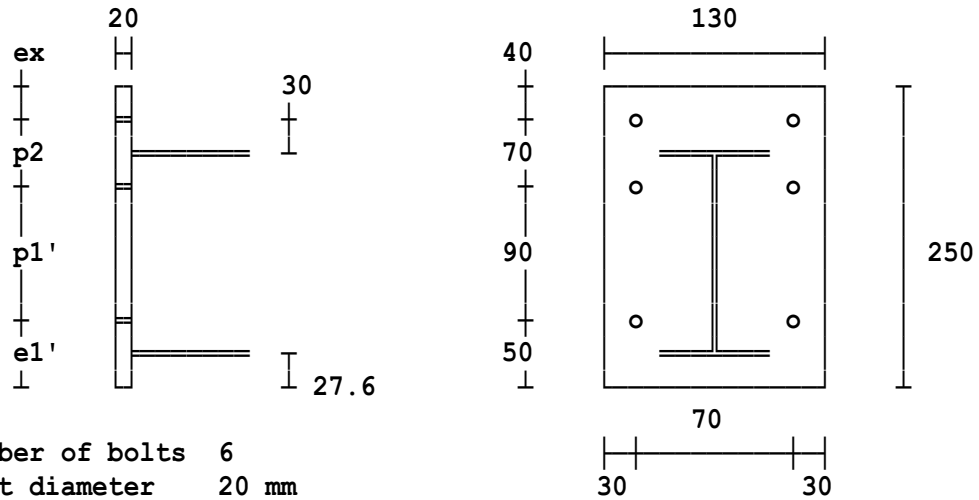

Number of bolts	**6**	
Bolt diameter	**20 mm**	
Bolt grade	**8.8**	
Welds	**Tension flange fillet weld**	**8 mm**
	Web fillet weld	**8 mm**
	Compression flange fillet weld	**6 mm**
Supporting column section	**152 x 152 x 23 UKC Grade S 275**	
Beam / Rafter section	**152 x 89 x 16 UKB Grade S 275**	

Column stiffener details

Diagonal stiffeners	**2/60 mm x 10 mm Grade S 275 on line between the beam tension and compression flanges connected by 4/6 mm fillet welds.**
Tension stiffeners	**Provide full depth stiffeners 10 mm thick midway between rows 1 and 2. Any remaining ribs are partial depth. For curtailment length see code.**

2/55 mm wide placed midway between the following bolt rows:
1 and 2

Location: Ex1 - Three rows of tension bolts

Beams are connected to both column flanges. The web panel shear can be discounted in the determination of the compressive force as the connection is assumed to have balanced moments.

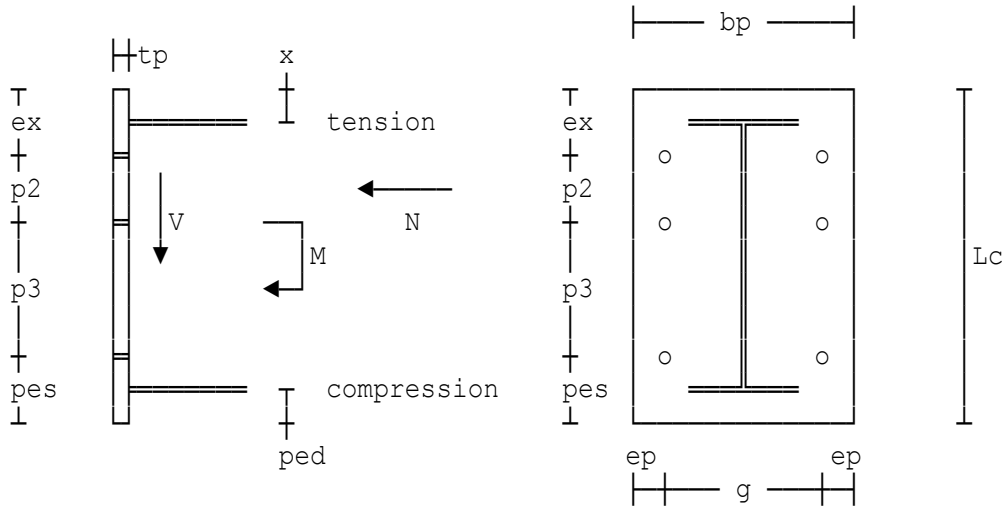

Factored moment	Ma=332 kNm
Factored shear force	V=128 kN
Axial force (+ve compression)	N=90 kN

254 x 254 x 107 UC.
533 x 210 x 92 UB.

Diameter of bolts	bd=24 mm
Thickness of plate	tp=25 mm
Total number of bolts	bn=8
Number of shear bolts	ns=2
Distance to first row of bolts	ex=75 mm
Distance to beam flange	x=15 mm
Pitch of tension bolts	p2=90 mm
Distance tension to shear bolts	p3=230 mm
Edge distance for shear bolts	pes=100 mm
Bolt cross-centres	g=100 mm
Width of end plate	bp=200 mm
Assumed web fillet weld size	sww=8 mm
Assumed flange fillet weld size	swf=12 mm

SUMMARY OF BOLT POTENTIAL RESISTANCES

Top row of bolts	Pr1=375.14 kN
Row 2	Pr2=303.2 kN
Row 3	Pr3=286.25 kN

Connection of stiffeners to column web

Effective length of weld Lw=4*(Lsn-2*sww)=718.8 mm
Assuming the load on the welds to be equal to the crushing resistance of stiffener.
Load on welds fws=Pcs*10^3/Lw=1161.3 N/mm
For electrode grade 35
Design strength pw=TABLE 37 for sgrade=275, Es=35
=220 N/mm²
Weld size ss=8 mm
Capacity of weld pws=0.7*ss*pw=1232 N/mm
ADOPT 2/120 mm x 15 mm plate stiffeners Grade S 275 adjacent to the haunch compression flange connected by 4/8 mm fillet welds.

WELD DESIGN
Tension flange welds

For electrode grade 35
Design strength pw=TABLE 37 for gradm=275, Es=35
=220 N/mm²
Weld size required swfr=Fw*10^3/(0.7*pw)=11.297 mm
Selected fillet weld size swt=12 mm

Web welds

Tension zone - a full strength weld is recommended in the web tension zone with the sum of the throat thicknesses ≥ the web thickness, tb.
Selected fillet weld size sfw=8 mm
Shear zone - assuming a fillet weld of 8 mm continued for the full depth, the capacity of the beam web weld for vertical shear is:
Length of weld for shear Lws=Db-2*(Tb+rb)-Lwt=178.3 mm
Capacity of weld for shear Psw=2*0.7*sfw*pw*Lws/10^3=439.33 kN
Vertical shear V=128 kN
Web weld size 8 mm is considered suitable.

CONNECTION SUMMARY

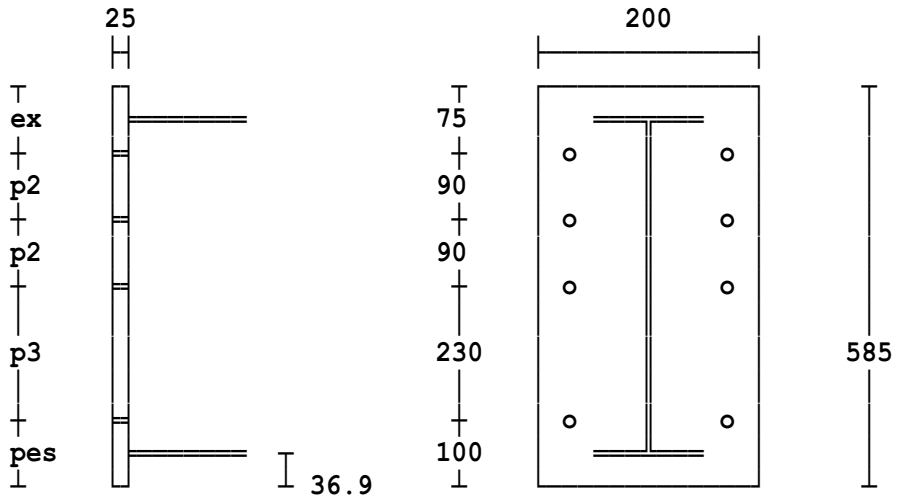

Number of bolts	**8**	
Bolt diameter	**24 mm**	
Bolt grade	**8.8**	
Welds	**Tension flange fillet weld**	**12 mm**
	Web fillet weld	**8 mm**
	Compression flange fillet weld	**8 mm**
Supporting column section	**254 x 254 x 107 UC**	
Beam / Rafter section	**533 x 210 x 92 UB**	

Column stiffener details

Compression stiffeners **2/120 mm x 15 mm Grade S 275**
connected by 4/8 mm fillet welds.

The connection is two sided.

Location: Ex2 - Four rows of tension bolts and mini haunch

Beams are connected to both column flanges. The web panel shear can be discounted in the determination of the compressive force as the connection is assumed to have balanced moments.

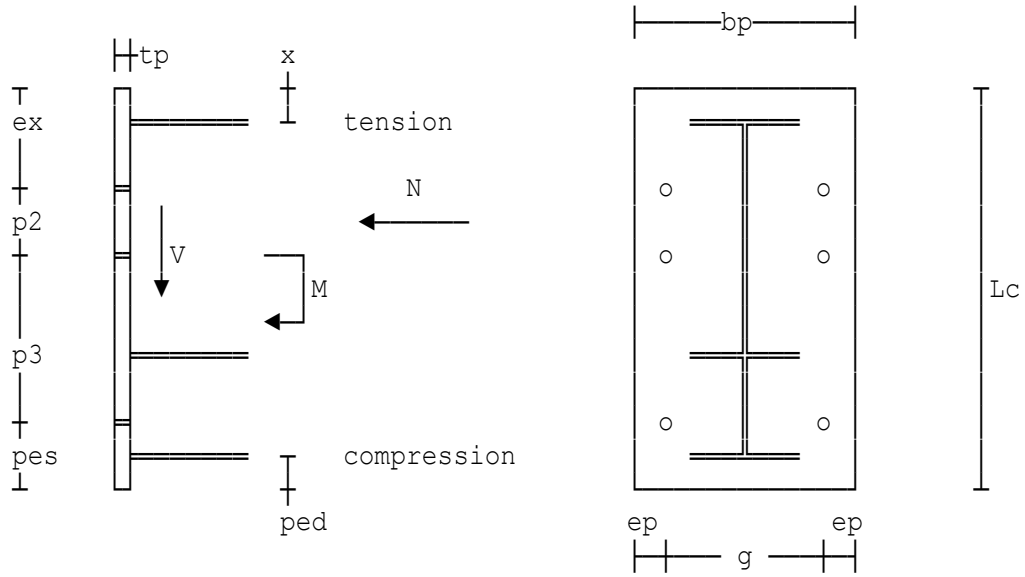

Factored moment	Ma=589 kNm
Factored shear force	V=137 kN
Axial force (+ve compression)	N=100 kN

254 x 254 x 107 UC.
533 x 210 x 92 UB.

Flange thickness	Th=15.6 mm
Flange width	Bh=209.3 mm
Web thickness	th=10.1 mm
Haunch depth	Dh=180 mm
Haunch angle to the beam flange	phi'=30°
Diameter of bolts	bd=24 mm
Thickness of plate	tp=25 mm
Total number of bolts	bn=10
Number of shear bolts	ns=2
Distance to first row of bolts	ex=75 mm
Distance to beam flange	x=15 mm
Pitch of tension bolts	p2=90 mm
Edge distance for shear bolts	pes=100 mm
Over-all length of end plate	Lc=765 mm
Bolt cross-centres	g=120 mm
Width of end plate	bp=220 mm
Assumed web fillet weld size	sww=8 mm
Assumed flange fillet weld size	swf=12 mm

SUMMARY OF BOLT POTENTIAL RESISTANCES

Top row of bolts	Pr1=366.8 kN
Row 2	Pr2=265.19 kN
Row 3	Pr3=265.19 kN
Row 4	Pr4=265.19 kN

Connection of stiffeners to column web

Effective length of weld	Lw=4*(Lsn-2*sww)=718.8 mm

Assuming the load on the welds to be equal to the crushing resistance of stiffener.

Load on welds	fws=Pcs*10^3/Lw=1050.7 N/mm
For electrode grade 35	
Design strength	pw=TABLE 37 for sgrade=275, Es=35 =220 N/mm²
Weld size	ss=8 mm
Capacity of weld	pws=0.7*ss*pw=1232 N/mm

ADOPT 2/110 mm x 15 mm plate stiffeners Grade S 275 adjacent to the haunch compression flange connected by 4/8 mm fillet welds.

WELD DESIGN
Tension flange welds

For electrode grade 35	
Design strength	pw=TABLE 37 for gradm=275, Es=35 =220 N/mm²
Weld size required	swfr=Fw*10^3/(0.7*pw)=10.046 mm
Selected fillet weld size	swt=12 mm

Web welds

Tension zone - a full strength weld is recommended in the web tension zone with the sum of the throat thicknesses ≥ the web thickness, tb.

Selected fillet weld size	sfw=8 mm

Shear zone - assuming a fillet weld of 8 mm continued for the full depth, the capacity of the beam web weld for vertical shear is:

Length of weld for shear	Lws=Db-2*(Tb+rb)-Lwt=251 mm
Capacity of weld for shear	Psw=2*0.7*sfw*pw*Lws/10^3=618.46 kN
Vertical shear	V=137 kN

Web weld size 8 mm is considered suitable.

CONNECTION SUMMARY

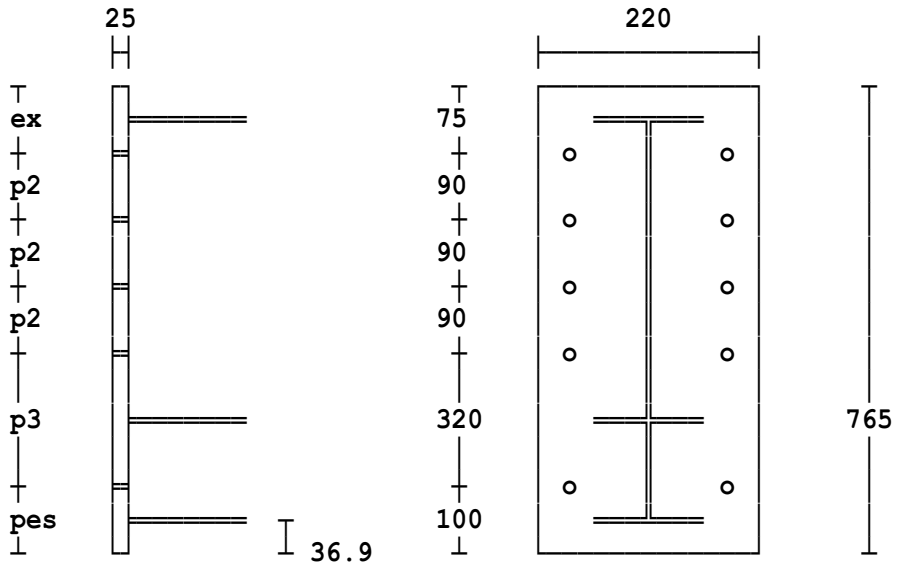

Number of bolts	**10**	
Bolt diameter	**24 mm**	
Bolt grade	**8.8**	
Welds	**Tension flange fillet weld**	**12 mm**
	Web fillet weld	**8 mm**
	Compression flange fillet weld	**8 mm**
Supporting column section	**254 x 254 x 107 UC**	
Beam / Rafter section	**533 x 210 x 92 UB**	
Haunch section	**15.6 mm x 209.3 mm flange, 10.1 mm web**	
	180 mm overall depth	

Column stiffener details

Compression stiffeners	**2/110 mm x 15 mm Grade S 275**
	connected by 4/8 mm fillet welds.

The connection is two sided.

Location: Ex3 - Six rows of tension bolts and mini haunch

Beams are connected to both column flanges. The web panel shear can be discounted in the determination of the compressive force as the connection is assumed to have balanced moments.

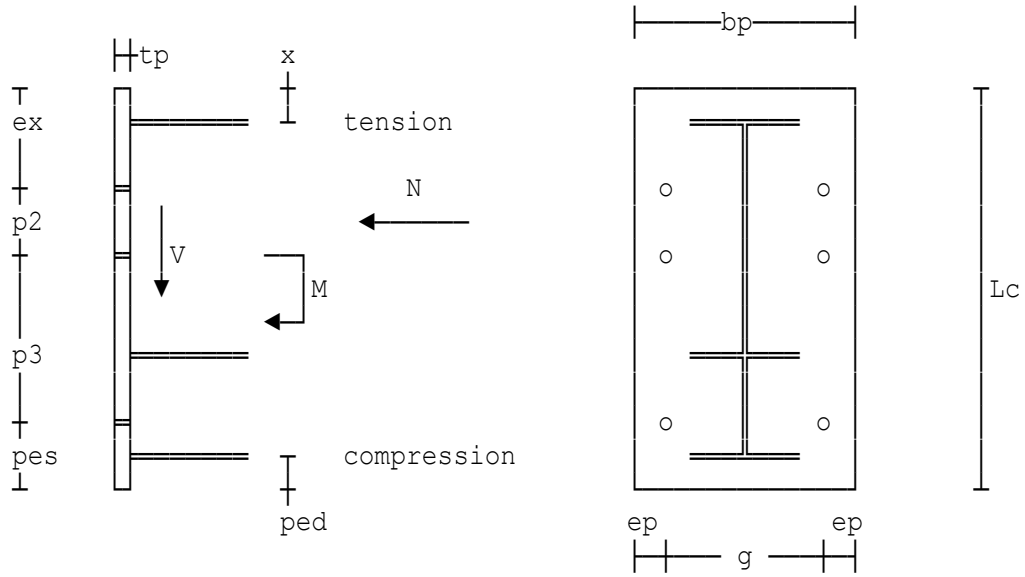

Factored moment	Ma=1500 kNm
Factored shear force	V=237 kN
Axial force (+ve compression)	N=100 kN

305 x 305 x 158 UC.
686 x 254 x 140 UB.

Flange thickness	Th=19 mm
Flange width	Bh=253.7 mm
Web thickness	th=12.4 mm
Haunch depth	Dh=450 mm
Haunch angle to the beam flange	phi'=30°
Diameter of bolts	bd=24 mm
Thickness of plate	tp=25 mm
Total number of bolts	bn=14
Number of shear bolts	ns=2
Distance to first row of bolts	ex=75 mm
Distance to beam flange	x=15 mm
Pitch of tension bolts	p2=90 mm
Edge distance for shear bolts	pes=100 mm
Over-all length of end plate	Lc=1200 mm
Bolt cross-centres	g=100 mm
Width of end plate	bp=250 mm
Assumed web fillet weld size	sww=10 mm
Assumed flange fillet weld size	swf=12 mm

SUMMARY OF BOLT POTENTIAL RESISTANCES

Top row of bolts	Pr1=395.36 kN
Row 2	Pr2=361.92 kN
Row 3	Pr3=328.48 kN
Row 4	Pr4=295.03 kN
Row 5	Pr5=261.59 kN
Row 6	Pr6=228.15 kN

Connection of stiffeners to column web

Effective length of weld	Lw=4*(Lsn-2*sww)=884.4 mm

Assuming the load on the welds to be equal to the crushing resistance of stiffener.

Load on welds	fws=Pcs*10^3/Lw=1169.8 N/mm
For electrode grade 35	
Design strength	pw=TABLE 37 for sgrade=275, Es=35 =220 N/mm²
Weld size	ss=10 mm
Capacity of weld	pws=0.7*ss*pw=1540 N/mm

ADOPT 2/140 mm x 16 mm plate stiffeners Grade S 275 adjacent to the haunch compression flange connected by 4/10 mm fillet welds.

WELD DESIGN
Tension flange welds

For electrode grade 35	
Design strength	pw=TABLE 37 for gradm=275, Es=35 =220 N/mm²
Weld size required	swfr=Fw*10^3/(0.7*pw)=10.085 mm
Selected fillet weld size	swt=12 mm

Web welds

Tension zone - a full strength weld is recommended in the web tension zone with the sum of the throat thicknesses ≥ the web thickness, tb.

Selected fillet weld size	sfw=10 mm

Shear zone - assuming a fillet weld of 10 mm continued for the full depth, the capacity of the beam web weld for vertical shear is:

Length of weld for shear	Lws=Db-2*(Tb+rb)-Lwt=502.8 mm
Capacity of weld for shear	Psw=2*0.7*sfw*pw*Lws/10^3=1548.6 kN
Vertical shear	V=237 kN

Web weld size 10 mm is considered suitable.

CONNECTION SUMMARY

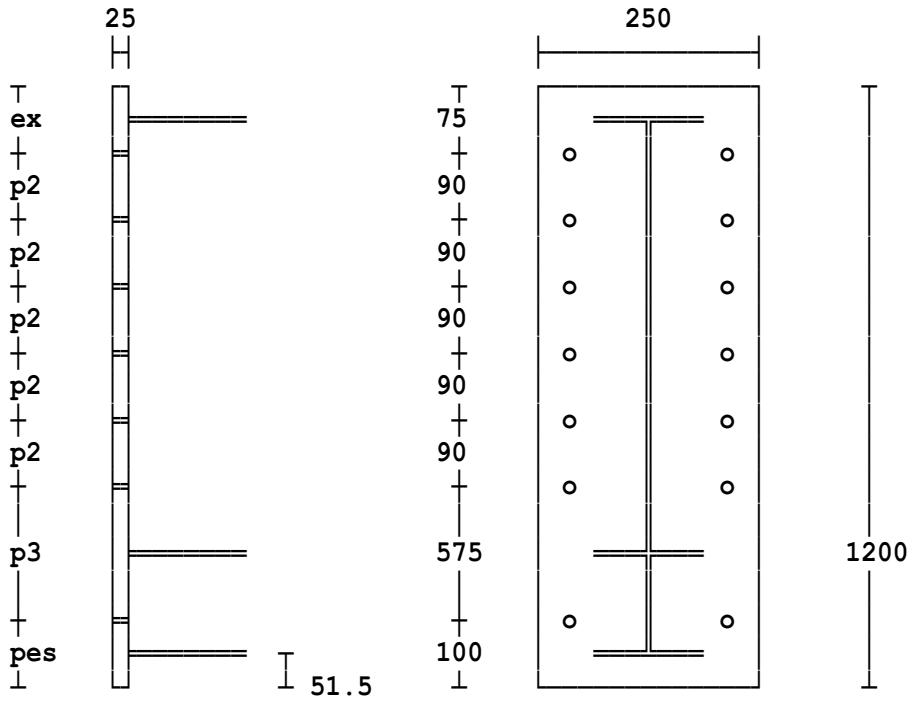

Number of bolts	**14**	
Bolt diameter	**24 mm**	
Bolt grade	**8.8**	
Welds	**Tension flange fillet weld**	**12 mm**
	Web fillet weld	**10 mm**
	Compression flange fillet weld	**8 mm**
Supporting column section	**305 x 305 x 158 UC**	
Beam / Rafter section	**686 x 254 x 140 UB**	
Haunch section	**19 mm x 253.7 mm flange, 12.4 mm web**	
	450 mm overall depth	

Column stiffener details

Compression stiffeners	**2/140 mm x 16 mm Grade S 275**
	connected by 4/10 mm fillet welds.

The connection is two sided.

Location: Ex4 - UB to UB connection

The connection is one sided. The web panel shear cannot be discounted in the determination of the compressive force.

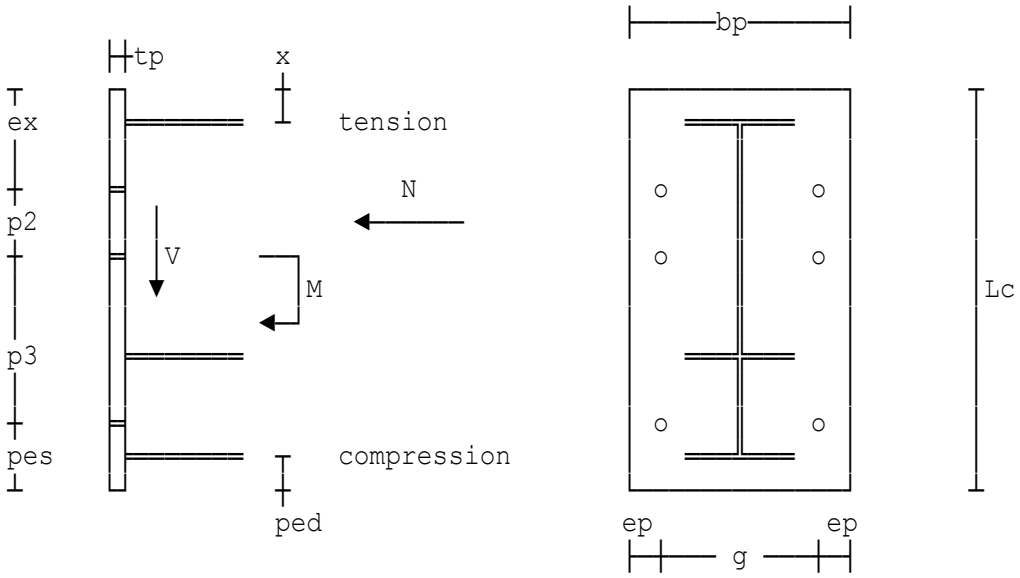

Factored moment	Ma=312 kNm
Factored shear force	V=345 kN
Axial force (+ve compression)	N=200 kN

457 x 191 x 98 UB.
406 x 178 x 67 UB.

Flange thickness	Th=15 mm
Flange width	Bh=180 mm
Web thickness	th=10 mm
Haunch depth	Dh=300 mm
Haunch angle to the beam flange	phi'=30°
Diameter of bolts	bd=24 mm
Thickness of plate	tp=24 mm
Total number of bolts	bn=10
Number of shear bolts	ns=4
Distance to first row of bolts	ex=90 mm
Distance to beam flange	x=25 mm
Pitch of tension bolts	p2=70 mm
Edge distance for shear bolts	pes=100 mm
Over-all length of end plate	Lc=770 mm
Bolt cross-centres	g=100 mm
Width of end plate	bp=180 mm
Assumed web fillet weld size	sww=8 mm
Assumed flange fillet weld size	swf=10 mm

SUMMARY OF BOLT POTENTIAL RESISTANCES

Top row of bolts	Pr1=354.24 kN
Row 2	Pr2=265.62 kN
Row 3	Pr3=265.62 kN

Connection of stiffeners to column web

Effective length of weld	Lw=4*(Lsn-2*sww)=1544 mm
Load on welds	fws=(PRT-Pbw)*10^3/Lw=263.2 N/mm
For electrode grade 35	
Design strength	pw=TABLE 37 for sgrade=275, Es=35 =220 N/mm²
Weld size	ss=6 mm
Capacity of weld	pws=0.7*ss*pw=924 N/mm

ADOPT 2/90 mm x 20 mm plate stiffeners Grade S 275 adjacent to the haunch compression flange connected by 4/6 mm fillet welds.

Slip factor for preloaded bolts	mu=0.5
Coefficient for type of hole	Ks=1

WELD DESIGN
Tension flange welds

For electrode grade 35	
Design strength	pw=TABLE 37 for gradm=275, Es=35 =220 N/mm²
Weld size required	swfr=Fw*10^3/(0.7*pw)=11.54 mm
Selected fillet weld size	swt=12 mm

Web welds

Tension zone - a full strength weld is recommended in the web tension zone with the sum of the throat thicknesses ≥ the web thickness, tb.

Selected fillet weld size	sfw=8 mm

Shear zone - assuming a fillet weld of 8 mm continued for the full depth, the capacity of the beam web weld for vertical shear is:

Length of weld for shear	Lws=Db-2*(Tb+rb)-Lwt=393.4 mm
Capacity of weld for shear	Psw=2*0.7*sfw*pw*Lws/10^3=969.34 kN
Vertical shear	V=345 kN

Web weld size 8 mm is considered suitable.

CONNECTION SUMMARY

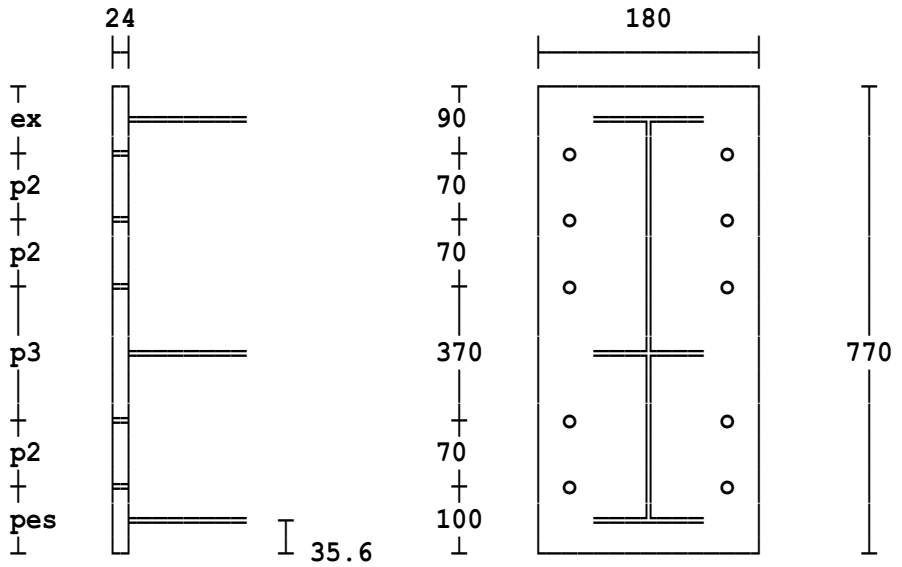

Number of bolts	10	
Bolt diameter	24 mm	
Bolt grade	HSFG	
General grade (8.8) to BS4395 Part 1.		Nuts grade 10.
Welds	Tension flange fillet weld	12 mm
	Web fillet weld	8 mm
	Compression flange fillet weld	8 mm
Supporting column section	457 x 191 x 98 UB	
Beam / Rafter section	406 x 178 x 67 UB	
Haunch section	15 mm x 180 mm flange, 10 mm web	
	300 mm overall depth	

Column stiffener details

Compression stiffeners	2/90 mm x 20 mm Grade S 275
	connected by 4/6 mm fillet welds.

The connection is one sided.

Location: Ex1 - Three rows of tension bolts

Bolted flush end plate connection - beam to column

Beams are connected to both column flanges. The web panel shear can be discounted in the determination of the compressive force as the connection is assumed to have balanced moments.
Calculations are in accordance with EC3 Parts 1-1, 1-5, 1-8 and follow the procedure given in the SCI publication P398 entitled 'Joints in Steel Construction Moment-Resisting Joints to EC3'. The connection is attached to the supporting column flange.

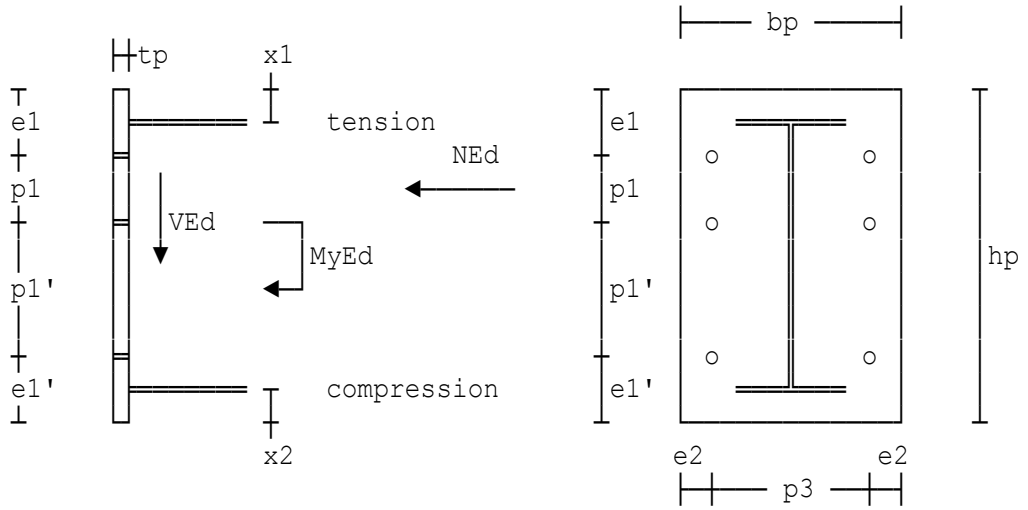

Factored moment	MyEd=332 kNm
Factored shear force	VEd=128 kN
Axial force (+ve compression)	NEd=90 kN

Supporting column details

254 x 254 x 107 UKC

Supported beam details

533 x 210 x 92 UKB

Bolt details

Diameter of bolts	db=24 mm
Tensile resistance (EC3 Part 1-8)	FtRd=k2*fub*At/(gamM2*10^3)=203.33 kN

End plate details

Thickness of plate	tp=25 mm
Number of bolts in end plate	bn=8
Number of shear bolts	ns=2
Distance to beam flange	x1=15 mm
Distance to first row of bolts	e1=75 mm
Pitch of tension bolts	p1=90 mm

Distance tension to shear bolts	p1'=230 mm
Edge distance for shear bolts	e1'=100 mm
Cross-centres of bolts	p3=100 mm
Width of end plate	bp=200 mm
Assumed web fillet weld size	sww=8 mm
Assumed flange fillet weld size	swf=12 mm

SUMMARY OF BOLT POTENTIAL RESISTANCES

Top row of bolts	Pr1=381.42 kN
Row 2	Pr2=309.47 kN
Row 3	Pr3=292.53 kN
Design axial load on column	NEdc=500 kN
Resistance of beam flange	FcRdf=1200 kN

Connection of stiffeners to column web

Effective length of weld	Lw=4*(Lsn-2*sww)=718.8 mm
Load on welds	FwEds=FcRds/Lw=1.1613 kN/mm
Weld design strength	fvwd1=fu/SQR(3)/(betaw*gamM2) =222.79 N/mm²
Weld size (leg length)	ss=8 mm
Resistance of weld	FwRds=0.7*ss*fvwd1/1000=1.2476 kN/mm

Adopt 2/120 mm x 15 mm plate stiffeners Grade S 275 adjacent to the haunch compression flange connected by 4/8 mm fillet welds.

Beam tension flange welds

Weld design strength	fvwd=fu/SQR(3)/(betaw*gamM2) =222.79 N/mm²
Tension resistance of the flange	Tf=bp*tfb*fyb/10^3=858 kN
Tension force in top 2 bolt rows	Tfc=Pr1+Pr2=690.89 kN
Weld force per mm	FwEdf=Tfb/(2*bp-twb)=1.772 kN/mm
Selected fillet weld size	swt=12 mm

Beam web welds

Tension zone - a full strength weld is recommended in the web tension zone with the sum of the throat thicknesses ≥ the web thickness, twb.

Selected fillet weld size	sfw=8 mm

Shear zone - assume an 8 mm FW continued for the full depth.

Length of weld for shear	Lws=hb-2*(tfb+rb)-Lwt=178.3 mm
Resistance of weld for shear	FwRds=2*0.7*sfw*fvwd*Lws/10^3=444.9 kN
Vertical shear	VEd=128 kN

An 8 mm weld size is therefore considered suitable.

CONNECTION SUMMARY - all dimensions in diagram are in mm

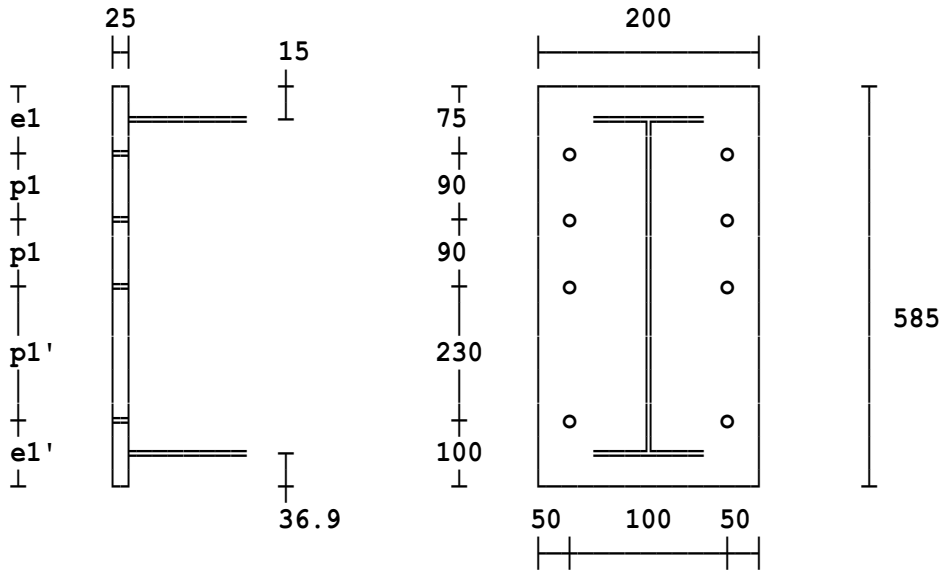

Number of bolts	**8**	
Bolt diameter	**24 mm**	
Bolt grade	**8.8**	
Welds	**Tension flange fillet weld**	**12 mm**
	Web fillet weld	**8 mm**
	Compression flange fillet weld	**8 mm**
Supporting column section	**254 x 254 x 107 UKC**	
Beam / Rafter section	**533 x 210 x 92 UKB**	

Column stiffener details

Compression stiffeners **2/120 mm x 15 mm Grade S 275**
connected by 4/8 mm fillet welds.

The connection under consideration is two sided.

Location: Ex2 - Four rows of tension bolts and mini haunch

Bolted flush end plate connection - beam to column

Beams are connected to both column flanges. The web panel shear can be discounted in the determination of the compressive force as the connection is assumed to have balanced moments.
Calculations are in accordance with EC3 Parts 1-1, 1-5, 1-8 and follow the procedure given in the SCI publication P398 entitled 'Joints in Steel Construction Moment-Resisting Joints to EC3'. The connection is attached to the supporting column flange.

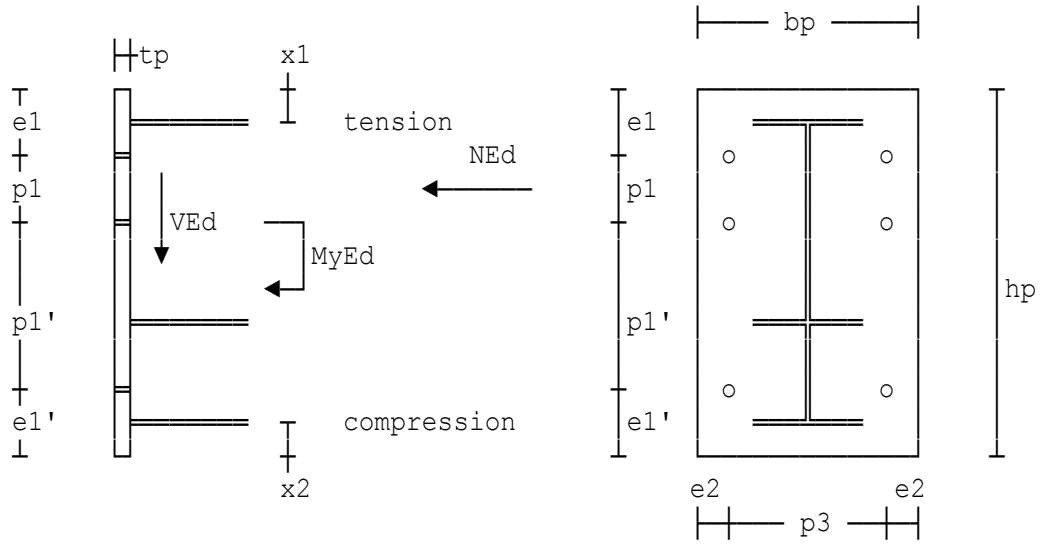

Factored moment	MyEd=589 kNm
Factored shear force	VEd=137 kN
Axial force (+ve compression)	NEd=100 kN

Supporting column details

254 x 254 x 132 UKC

Supported beam details

533 x 210 x 92 UKB

Haunch details

Flange thickness	tfh=15.6 mm
Flange width	bh=209.3 mm
Web thickness	twh=10.1 mm
Haunch depth	hh=180 mm
Haunch angle to the beam flange	phi'=30°

Bolt details

Diameter of bolts	db=24 mm
Tensile resistance (EC3 Part 1-8)	FtRd=k2*fub*At/(gamM2*10^3)=203.33 kN

End plate details

Thickness of plate	tp=25 mm
Number of bolts in end plate	bn=10
Number of shear bolts	ns=2
Distance to beam flange	x1=15 mm
Distance to first row of bolts	e1=75 mm
Pitch of tension bolts	p1=90 mm
Edge distance for shear bolts	e1'=100 mm
Over-all length of end plate	hp=765 mm
Cross-centres of bolts	p3=120 mm
Width of end plate	bp=220 mm
Assumed web fillet weld size	sww=8 mm
Assumed flange fillet weld size	swf=12 mm

SUMMARY OF BOLT POTENTIAL RESISTANCES

Top row of bolts	Pr1=406.66 kN
Row 2	Pr2=313.54 kN
Row 3	Pr3=281.95 kN
Row 4	Pr4=236.51 kN
Design axial load on column	NEdc=500 kN
Resistance of beam flange	FcRdf=1257 kN

Connection of stiffeners to column web

Effective length of weld	Lw=4*(Lsn-2*sww)=718.8 mm
Load on welds	FwEds=FcRds/Lw=1.1613 kN/mm
Weld design strength	fvwd1=fu/SQR(3)/(betaw*gamM2) =222.79 N/mm²
Weld size (leg length)	ss=10 mm
Resistance of weld	FwRds=0.7*ss*fvwd1/1000=1.5595 kN/mm

Adopt 2/120 mm x 15 mm plate stiffeners Grade S 275 adjacent to the haunch compression flange connected by 4/10 mm fillet welds.

Beam tension flange welds

Weld design strength	fvwd=fu/SQR(3)/(betaw*gamM2) =222.79 N/mm²
Tension resistance of the flange	Tf=bb*tfb*fyb/10^3=897.9 kN
Tension force in top 2 bolt rows	Tfc=Pr1+Pr2=720.19 kN
Weld force per mm	FwEdf=Tfb/(2*bb-twb)=1.763 kN/mm
Selected fillet weld size	swt=12 mm

Beam web welds

Tension zone - a full strength weld is recommended in the web tension zone with the sum of the throat thicknesses ≥ the web thickness, twb.

Selected fillet weld size	sfw=8 mm

Shear zone - assume an 8 mm FW continued for the full depth.

Length of weld for shear	Lws=hb-2*(tfb+rb)-Lwt=251 mm
Resistance of weld for shear	FwRds=2*0.7*sfw*fvwd*Lws/10^3 =626.31 kN
Vertical shear	VEd=137 kN

An 8 mm weld size is therefore considered suitable.

CONNECTION SUMMARY - all dimensions in diagram are in mm

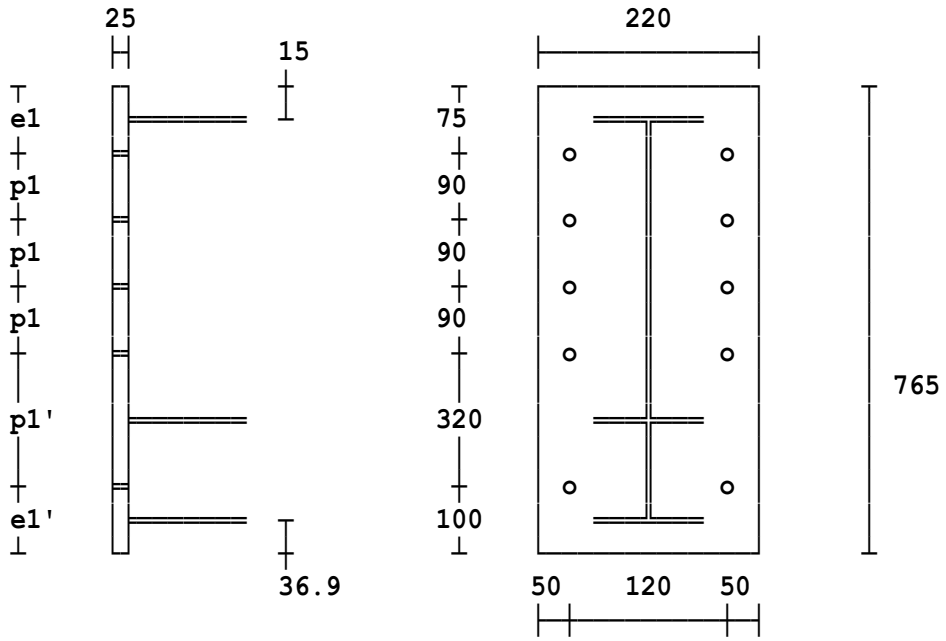

Number of bolts	**10**	
Bolt diameter	**24 mm**	
Bolt grade	**8.8**	
Welds	**Tension flange fillet weld**	**12 mm**
	Web fillet weld	**8 mm**
	Compression flange fillet weld	**8 mm**
Supporting column section	**254 x 254 x 132 UKC**	
Beam / Rafter section	**533 x 210 x 92 UKB**	
Haunch section	**15.6 mm x 209.3 mm flange, 10.1 mm web**	
	180 mm overall depth.	

Column stiffener details

Compression stiffeners	**2/120 mm x 15 mm Grade S 275**
	connected by 4/10 mm fillet welds.

The connection under consideration is two sided.

Location: Ex3 - Six rows of tension bolts and mini haunch

Bolted flush end plate connection - beam to column

Beams are connected to both column flanges. The web panel shear can be discounted in the determination of the compressive force as the connection is assumed to have balanced moments.
Calculations are in accordance with EC3 Parts 1-1, 1-5, 1-8 and follow the procedure given in the SCI publication P398 entitled 'Joints in Steel Construction Moment-Resisting Joints to EC3'. The connection is attached to the supporting column flange.

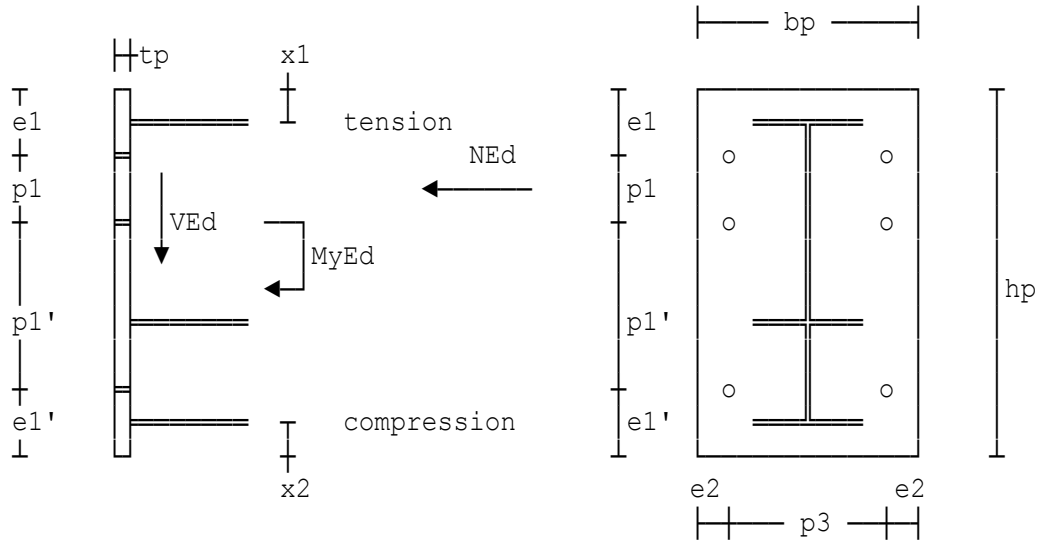

Factored moment	MyEd=1500 kNm
Factored shear force	VEd=215 kN
Axial force (+ve compression)	NEd=100 kN

Supporting column details

305 x 305 x 158 UKC

Supported beam details

686 x 254 x 140 UKB

Haunch details

Flange thickness	tfh=19 mm
Flange width	bh=253.7 mm
Web thickness	twh=12.4 mm
Haunch depth	hh=550 mm
Haunch angle to the beam flange	phi'=30°

Bolt details

Diameter of bolts	db=24 mm
Tensile resistance (EC3 Part 1-8)	FtRd=k2*fub*At/(gamM2*10^3)=203.33 kN

End plate details

Thickness of plate	tp=25 mm
Number of bolts in end plate	bn=14
Number of shear bolts	ns=2
Distance to beam flange	x1=15 mm
Distance to first row of bolts	e1=75 mm
Pitch of tension bolts	p1=90 mm
Edge distance for shear bolts	e1'=100 mm
Over-all length of end plate	hp=1300 mm
Cross-centres of bolts	p3=100 mm
Width of end plate	bp=250 mm
Assumed web fillet weld size	sww=10 mm
Assumed flange fillet weld size	swf=12 mm

SUMMARY OF BOLT POTENTIAL RESISTANCES

Top row of bolts	Pr1=406.66 kN
Row 2	Pr2=375.21 kN
Row 3	Pr3=343.57 kN
Row 4	Pr4=312.33 kN
Row 5	Pr5=280.89 kN
Row 6	Pr6=249.44 kN
Design axial load on column	NEdc=500 kN
Resistance of beam flange	FcRdf=1762 kN

Connection of stiffeners to column web

Effective length of weld	Lw=4*(Lsn-2*sww)=884.4 mm
Load on welds	FwEds=FcRds/Lw=1.4622 kN/mm
Weld design strength	fvwd1=fu/SQR(3)/(betaw*gamM2) =222.79 N/mm²
Weld size (leg length)	ss=10 mm
Resistance of weld	FwRds=0.7*ss*fvwd1/1000=1.5595 kN/mm

Adopt 2/140 mm x 20 mm plate stiffeners Grade S 275 adjacent to the haunch compression flange connected by 4/10 mm fillet welds.

Beam tension flange welds

Weld design strength	fvwd=fu/SQR(3)/(betaw*gamM2) =222.79 N/mm²
Tension resistance of the flange	Tf=bp*tfb*fyb/10^3=1258.8 kN
Tension force in top 2 bolt rows	Tfc=Pr1+Pr2=781.87 kN
Weld force per mm	FwEdf=Tfb/(2*bp-twb)=1.6035 kN/mm
Selected fillet weld size	swt=12 mm

Beam web welds

Tension zone - a full strength weld is recommended in the web tension zone with the sum of the throat thicknesses ≥ the web thickness, twb.

Selected fillet weld size	sfw=10 mm

Shear zone - assume an 10 mm FW continued for the full depth.

Length of weld for shear	Lws=hb-2*(tfb+rb)-Lwt=602.8 mm

Resistance of weld for shear FwRds=2*0.7*sfw*fvwd*Lws/10^3
=1880.2 kN
Vertical shear VEd=215 kN
An 10 mm weld size is therefore considered suitable.

CONNECTION SUMMARY - all dimensions in diagram are in mm

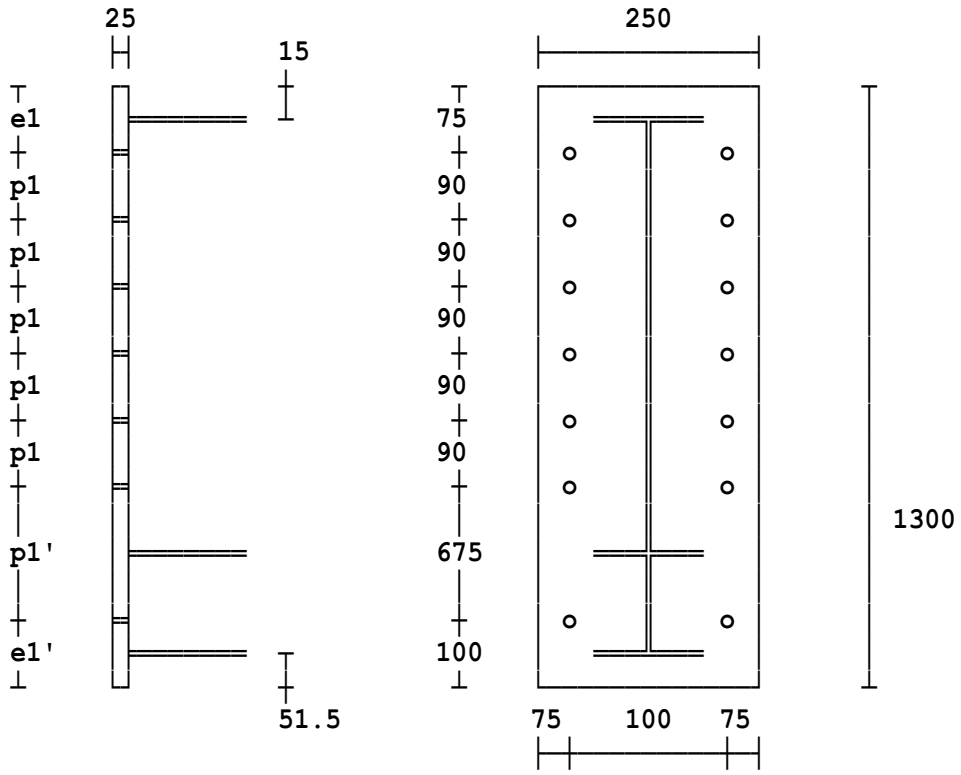

Number of bolts 14
Bolt diameter 24 mm
Bolt grade 8.8
Welds Tension flange fillet weld 12 mm
Web fillet weld 10 mm
Compression flange fillet weld 8 mm
Supporting column section 305 x 305 x 158 UKC
Beam / Rafter section 686 x 254 x 140 UKB
Haunch section 19 mm x 253.7 mm flange, 12.4 mm web
550 mm overall depth.

Column stiffener details

Compression stiffeners 2/140 mm x 20 mm Grade S 275
connected by 4/10 mm fillet welds.
The connection under consideration is two sided.

Location: Ex4 - UKB to UKB connection

Bolted flush end plate connection - beam to column

The connection is one sided. The web panel shear cannot be discounted in the determination of the compressive force.
Calculations are in accordance with EC3 Parts 1-1, 1-5, 1-8 and follow the procedure given in the SCI publication P398 entitled 'Joints in Steel Construction Moment-Resisting Joints to EC3'. The connection is attached to the supporting column flange.

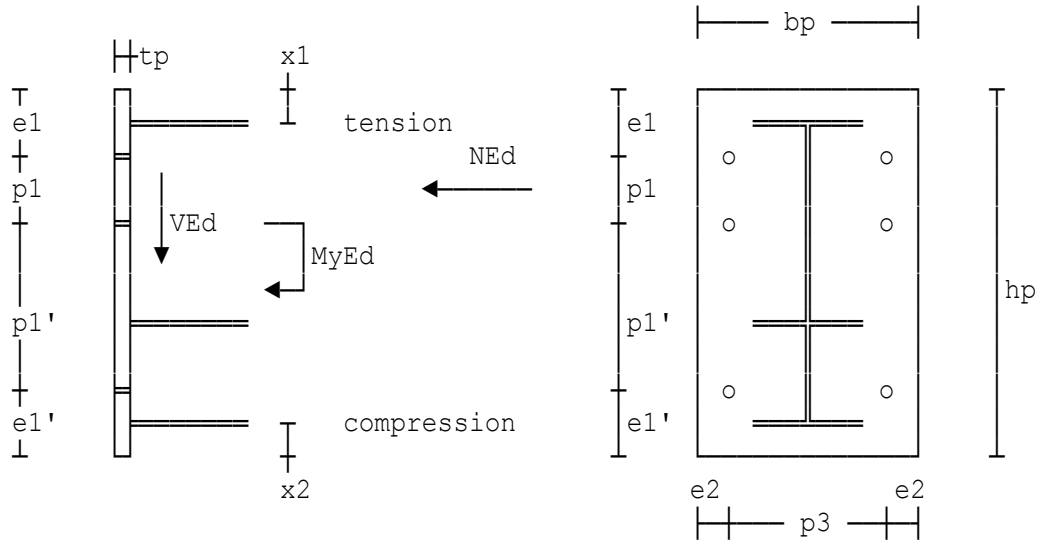

Factored moment	MyEd=312 kNm
Factored shear force	VEd=345 kN
Axial force (+ve compression)	NEd=200 kN

Supporting column details

457 x 191 x 98 UKB

Supported beam details

406 x 178 x 67 UKB

Haunch details

Flange thickness	tfh=15 mm
Flange width	bh=180 mm
Web thickness	twh=10 mm
Haunch depth	hh=300 mm
Haunch angle to the beam flange	phi'=30°

Bolt details

Diameter of bolts	db=24 mm
Tensile resistance (EC3 Part 1-8)	FtRd=k2*fub*At/(gamM2*10^3)=203.33 kN

End plate details

Thickness of plate	tp=24 mm
Number of bolts in end plate	bn=10
Number of shear bolts	ns=4
Distance to beam flange	x1=25 mm
Distance to first row of bolts	e1=90 mm
Pitch of tension bolts	p1=70 mm
Edge distance for shear bolts	e1'=100 mm
Over-all length of end plate	hp=770 mm
Cross-centres of bolts	p3=100 mm
Width of end plate	bp=180 mm
Assumed web fillet weld size	sww=8 mm
Assumed flange fillet weld size	swf=10 mm

SUMMARY OF BOLT POTENTIAL RESISTANCES

Top row of bolts	Pr1=349.05 kN
Row 2	Pr2=260.43 kN
Row 3	Pr3=260.43 kN
Design axial load on column	NEdc=500 kN
Resistance of beam flange	FcRdf=1039 kN

Connection of stiffeners to column web

Effective length of weld	Lw=4*(Lsn-2*sww)=1544 mm
Load on welds	FwEds=(PRT-FcRdcw)/Lw=0.3919 kN/mm
Weld design strength	fvwd1=fu/SQR(3)/(betaw*gamM2) =222.79 N/mm²
Weld size (leg length)	ss=6 mm
Resistance of weld	FwRds=0.7*ss*fvwd1/1000=0.93571 kN/mm

Adopt 2/90 mm x 20 mm plate stiffeners Grade S 275 adjacent to the haunch compression flange connected by 4/6 mm fillet welds.

Beam tension flange welds

Weld design strength	fvwd=fu/SQR(3)/(betaw*gamM2) =222.79 N/mm²
Tension resistance of the flange	Tf=bb*tfb*fyb/10^3=703.13 kN
Tension force in top 2 bolt rows	Tfc=Pr1+Pr2=566.36 kN
Weld force per mm	FwEdf=Tfb/(2*bb-twb)=1.6237 kN/mm
Selected fillet weld size	swt=12 mm

Beam web welds

Tension zone - a full strength weld is recommended in the web tension zone with the sum of the throat thicknesses ≥ the web thickness, twb.

Selected fillet weld size	sfw=8 mm

Shear zone - assume an 8 mm FW continued for the full depth.

Length of weld for shear	Lws=hb-2*(tfb+rb)-Lwt=393.4 mm
Resistance of weld for shear	FwRds=2*0.7*sfw*fvwd*Lws/10^3 =981.63 kN
Vertical shear	VEd=345 kN

An 8 mm weld size is therefore considered suitable.

CONNECTION SUMMARY - all dimensions in diagram are in mm

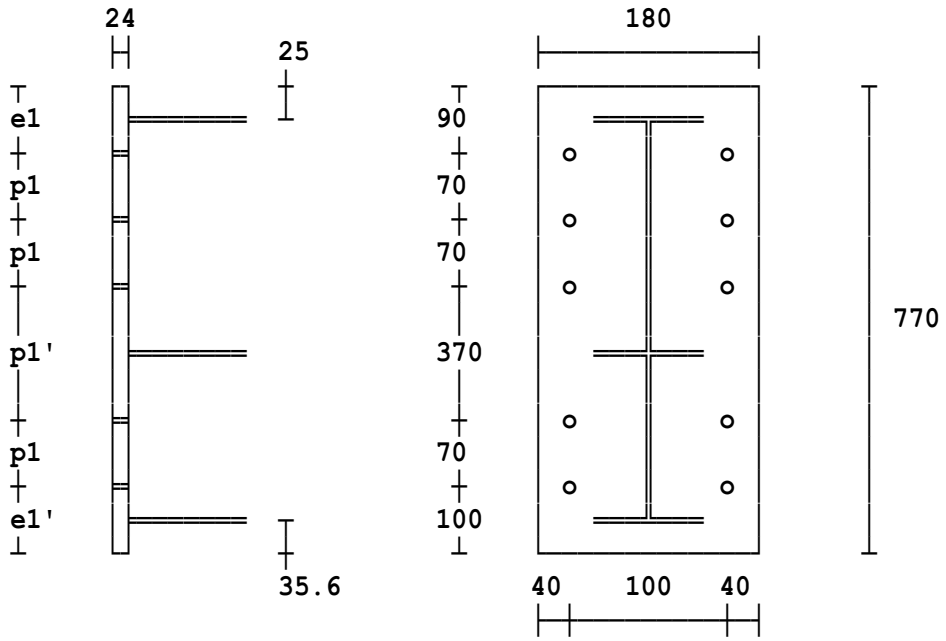

Number of bolts	10
Bolt diameter	24 mm
Bolt grade	Preloaded HSFG bolts
	General grade (8.8) with grade 10 nuts.
Welds	Tension flange fillet weld 12 mm
	Web fillet weld 8 mm
	Compression flange fillet weld 8 mm
Supporting column section	457 x 191 x 98 UKB
Beam / Rafter section	406 x 178 x 67 UKB
Haunch section	15 mm x 180 mm flange, 10 mm web
	300 mm overall depth.

Column stiffener details

Compression stiffeners	2/90 mm x 20 mm Grade S 275
	connected by 4/6 mm fillet welds.

The connection under consideration is one sided.

Location: Ex5 - Compression & tension rib stiffeners plus haunch

Bolted flush end plate connection - beam to column

Beams are connected to both column flanges. The web panel shear can be discounted in the determination of the compressive force as the connection is assumed to have balanced moments.
Calculations are in accordance with EC3 Parts 1-1, 1-5, 1-8 and follow the procedure given in the SCI publication P398 entitled 'Joints in Steel Construction Moment-Resisting Joints to EC3'. The connection is attached to the supporting column flange.

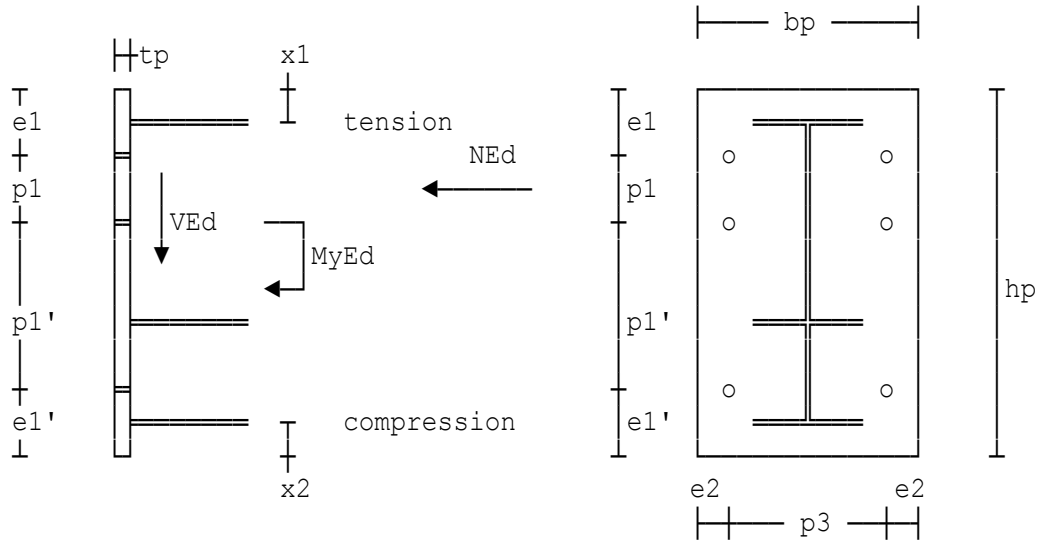

Factored moment	MyEd=589 kNm
Factored shear force	VEd=137 kN
Axial force (+ve compression)	NEd=100 kN

Supporting column details

254 x 254 x 132 UKC

Supported beam details

533 x 210 x 92 UKB

Haunch details

Flange thickness	tfh=15.6 mm
Flange width	bh=209.3 mm
Web thickness	twh=10.1 mm
Haunch depth	hh=180 mm
Haunch angle to the beam flange	phi'=30°

Bolt details

Diameter of bolts	db=24 mm
Tensile resistance (EC3 Part 1-8)	FtRd=k2*fub*At/(gamM2*10^3)=203.33 kN

End plate details

Thickness of plate	tp=25 mm
Number of bolts in end plate	bn=10
Number of shear bolts	ns=2
Distance to beam flange	x1=15 mm
Distance to first row of bolts	e1=85 mm
Pitch of tension bolts	p1=70 mm
Edge distance for shear bolts	e1'=85 mm
Over-all length of end plate	hp=765 mm
Cross-centres of bolts	p3=120 mm
Width of end plate	bp=220 mm
Assumed web fillet weld size	sww=8 mm
Assumed flange fillet weld size	swf=12 mm

SUMMARY OF BOLT POTENTIAL RESISTANCES

Top row of bolts	Pr1=406.66 kN
Row 2	Pr2=290.74 kN
Row 3	Pr3=265.14 kN
Row 4	Pr4=265.14 kN
Design axial load on column	NEdc=500 kN
Resistance of beam flange	FcRdf=1257 kN

Connection of stiffeners to column web

Effective length of weld	Lw=4*(Lsn-2*sww)=718.8 mm
Load on welds	FwEds=FcRds/Lw=1.1613 kN/mm
Weld design strength	fvwd1=fu/SQR(3)/(betaw*gamM2) =222.79 N/mm²
Weld size (leg length)	ss=10 mm
Resistance of weld	FwRds=0.7*ss*fvwd1/1000=1.5595 kN/mm

Adopt 2/120 mm x 15 mm plate stiffeners Grade S 275 adjacent to the haunch compression flange connected by 4/10 mm fillet welds.

Beam tension flange welds

Weld design strength	fvwd=fu/SQR(3)/(betaw*gamM2) =222.79 N/mm²
Tension resistance of the flange	Tf=bb*tfb*fyb/10^3=897.9 kN
Tension force in top 2 bolt rows	Tfc=Pr1+Pr2=697.4 kN
Weld force per mm	FwEdf=Tfb/(2*bb-twb)=1.7072 kN/mm
Selected fillet weld size	swt=12 mm

Beam web welds

Tension zone - a full strength weld is recommended in the web tension zone with the sum of the throat thicknesses ≥ the web thickness, twb.

Selected fillet weld size	sfw=8 mm

Shear zone - assume an 8 mm FW continued for the full depth.

Length of weld for shear	Lws=hb-2*(tfb+rb)-Lwt=301 mm
Resistance of weld for shear	FwRds=2*0.7*sfw*fvwd*Lws/10^3 =751.07 kN
Vertical shear	VEd=137 kN

An 8 mm weld size is therefore considered suitable.

CONNECTION SUMMARY - all dimensions in diagram are in mm

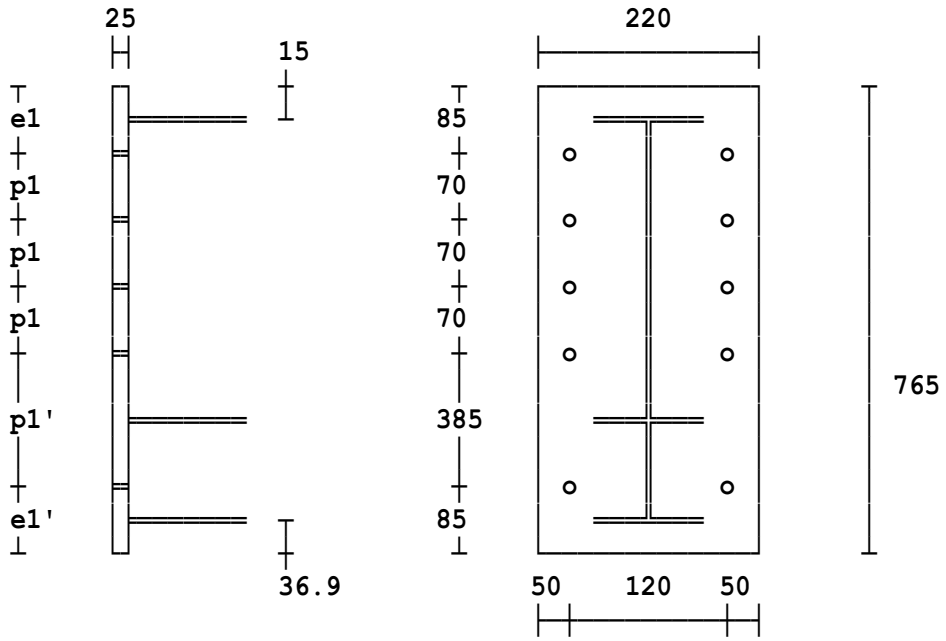

Number of bolts	**10**	
Bolt diameter	**24 mm**	
Bolt grade	**8.8**	
Welds	**Tension flange fillet weld**	**12 mm**
	Web fillet weld	**8 mm**
	Compression flange fillet weld	**8 mm**
Supporting column section	**254 x 254 x 132 UKC**	
Beam / Rafter section	**533 x 210 x 92 UKB**	
Haunch section	**15.6 mm x 209.3 mm flange, 10.1 mm web**	
	180 mm overall depth.	

Column stiffener details

Compression stiffeners	**2/120 mm x 15 mm Grade S 275**
	connected by 4/10 mm fillet welds.

The connection under consideration is two sided.

Location: Ex6 - Two rows of tension bolts

Bolted flush end plate connection - beam to column

Beams are connected to both column flanges. The web panel shear can be discounted in the determination of the compressive force as the connection is assumed to have balanced moments.
Calculations are in accordance with EC3 Parts 1-1, 1-5, 1-8 and follow the procedure given in the SCI publication P398 entitled 'Joints in Steel Construction Moment-Resisting Joints to EC3'. The connection is attached to the supporting column flange.

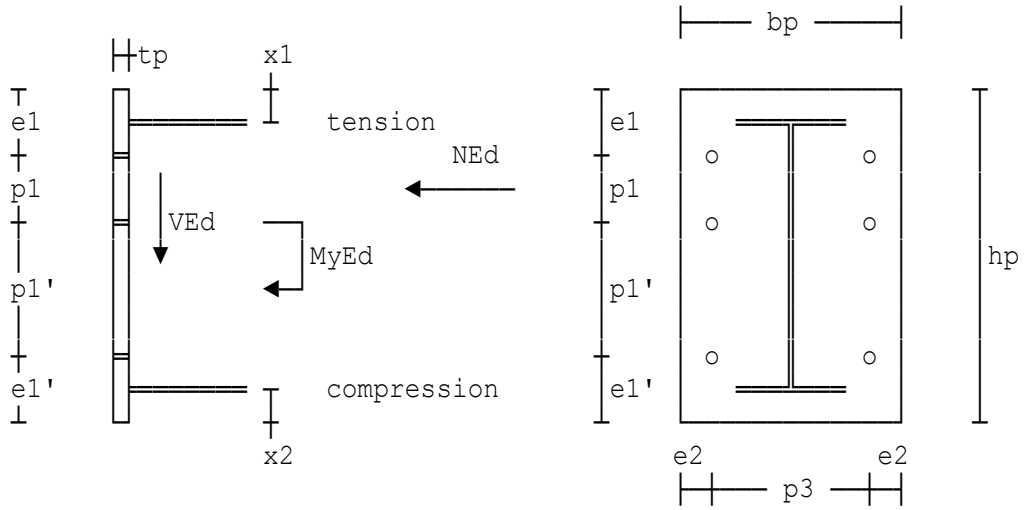

Factored moment	MyEd=100 kNm
Factored shear force	VEd=128 kN
Axial force (+ve compression)	NEd=90 kN

Supporting column details

254 x 254 x 107 UKC

Supported beam details

533 x 210 x 92 UKB

Bolt details

Diameter of bolts	db=20 mm
Tensile resistance (EC3 Part 1-8)	FtRd=k2*fub*At/(gamM2*10^3)=141.12 kN

End plate details

Thickness of plate	tp=25 mm
Number of bolts in end plate	bn=6
Number of shear bolts	ns=2
Distance to beam flange	x1=15 mm
Distance to first row of bolts	e1=100 mm
Pitch of tension bolts	p1=75 mm

Edge distance for shear bolts	e1'=100 mm
Over-all length of end plate	hp=600 mm
Cross-centres of bolts	p3=100 mm
Width of end plate	bp=200 mm
Assumed web fillet weld size	sww=8 mm
Assumed flange fillet weld size	swf=12 mm

SUMMARY OF BOLT POTENTIAL RESISTANCES

Top row of bolts	Pr1=282.24 kN
Row 2	Pr2=234.16 kN
Design axial load on column	NEdc=500 kN
Resistance of beam flange	FcRdf=1201 kN

Connection of stiffeners to column web

Effective length of weld	Lw=4*(Lsn-2*sww)=718.8 mm
Load on welds	FwEds=FcRds/Lw=1.1613 kN/mm
Weld design strength	fvwd1=fu/SQR(3)/(betaw*gamM2) =222.79 N/mm²
Weld size (leg length)	ss=8 mm
Resistance of weld	FwRds=0.7*ss*fvwd1/1000=1.2476 kN/mm

Adopt 2/120 mm x 15 mm plate stiffeners Grade S 275 adjacent to the haunch compression flange connected by 4/8 mm fillet welds.

Beam tension flange welds

Weld design strength	fvwd=fu/SQR(3)/(betaw*gamM2) =222.79 N/mm²
Tension resistance of the flange	Tf=bp*tfb*fyb/10^3=858 kN
Tension force in top 2 bolt rows	Tfc=Pr1+Pr2=516.4 kN
Weld force per mm	FwEdf=Tfb/(2*bp-twb)=1.3245 kN/mm
Selected fillet weld size	swt=10 mm

Beam web welds

A full strength weld will be used.
As the beam web ≤ 11.3 mm, no calculations are needed for tension or shear provided that full strength welds are used.

Full strength weld	swf'=INT(swf')=7 mm
Selected fillet weld size	sfw=8 mm

CONNECTION SUMMARY - all dimensions in diagram are in mm

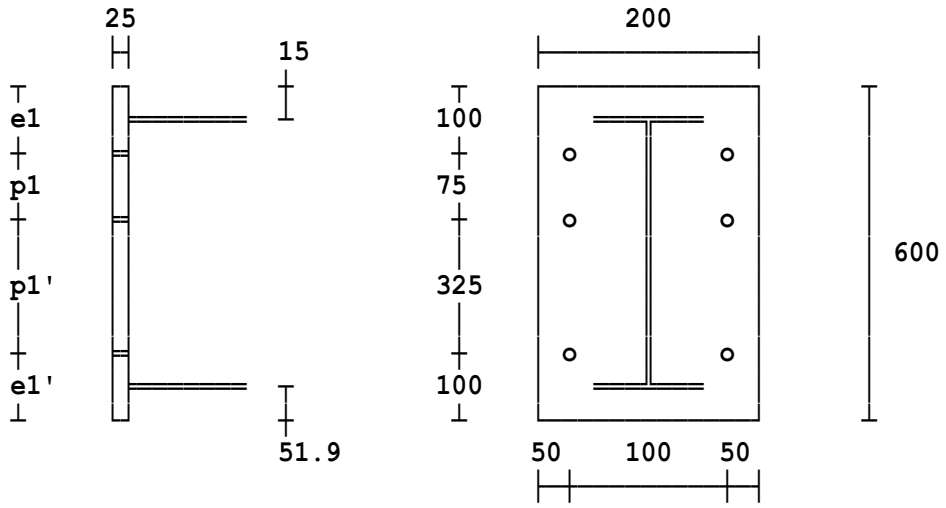

Number of bolts	**6**	
Bolt diameter	**20 mm**	
Bolt grade	**8.8**	
Welds	**Tension flange fillet weld**	**10 mm**
	Web fillet weld	**8 mm**
	Compression flange fillet weld	**8 mm**
Supporting column section	**254 x 254 x 107 UKC**	
Beam / Rafter section	**533 x 210 x 92 UKB**	

Column stiffener details

Compression stiffeners **2/120 mm x 15 mm Grade S 275**
connected by 4/8 mm fillet welds.

The connection under consideration is two sided.

Location: Ex7 - Two rows of tension bolts

Bolted flush end plate connection - beam to column

Beams are connected to both column flanges. The web panel shear can be discounted in the determination of the compressive force as the connection is assumed to have balanced moments.
Calculations are in accordance with EC3 Parts 1-1, 1-5, 1-8 and follow the procedure given in the SCI publication P398 entitled 'Joints in Steel Construction Moment-Resisting Joints to EC3'. The connection is attached to the supporting column flange.

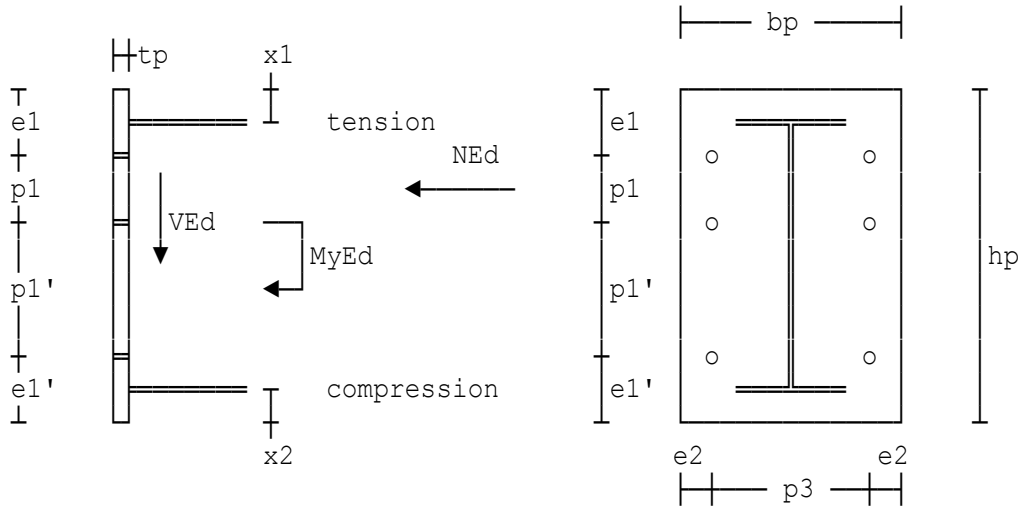

Factored moment	MyEd=15 kNm
Factored shear force	VEd=30 kN
Axial force (+ve compression)	NEd=10 kN

Supporting column details

254 x 254 x 73 UKC

Supported beam details

356 x 171 x 45 UKB

Bolt details

Diameter of bolts	db=16 mm
Tensile resistance (EC3 Part 1-8)	FtRd=k2*fub*At/(gamM2*10^3)=90.432 kN

End plate details

Thickness of plate	tp=20 mm
Number of bolts in end plate	bn=6
Number of shear bolts	ns=2
Distance to beam flange	x1=15 mm
Distance to first row of bolts	e1=70 mm
Pitch of tension bolts	p1=45 mm

Edge distance for shear bolts	e1'=120 mm
Over-all length of end plate	hp=410 mm
Cross-centres of bolts	p3=140 mm
Width of end plate	bp=220 mm
Assumed web fillet weld size	sww=8 mm
Assumed flange fillet weld size	swf=8 mm

SUMMARY OF BOLT POTENTIAL RESISTANCES

Top row of bolts	Pr1=160.98 kN
Row 2	Pr2=88.782 kN
Design axial load on column	NEdc=10 kN
Resistance of beam flange	FcRdf=638 kN

Beam tension flange welds

Weld design strength	fvwd=fu/SQR(3)/(betaw*gamM2) =222.79 N/mm²
Tension resistance of the flange	Tf=bb*tfb*fyb/10^3=456.41 kN
Tension force in top 2 bolt rows	Tfc=Pr1+Pr2=249.76 kN
Weld force per mm	FwEdf=Tfb/(2*bb-twb)=0.74511 kN/mm
Selected fillet weld size	swt=8 mm

Beam web welds

Tension zone - a full strength weld is recommended in the web tension zone with the sum of the throat thicknesses ≥ the web thickness, twb.
Selected fillet weld size sfw=8 mm

Shear zone - assume an 8 mm FW continued for the full depth.

Length of weld for shear	Lws=hb-2*(tfb+rb)-Lwt=110.4 mm
Resistance of weld for shear	FwRds=2*0.7*sfw*fvwd*Lws/10^3 =275.47 kN
Vertical shear	VEd=30 kN

An 8 mm weld size is therefore considered suitable.

CONNECTION SUMMARY - all dimensions in diagram are in mm

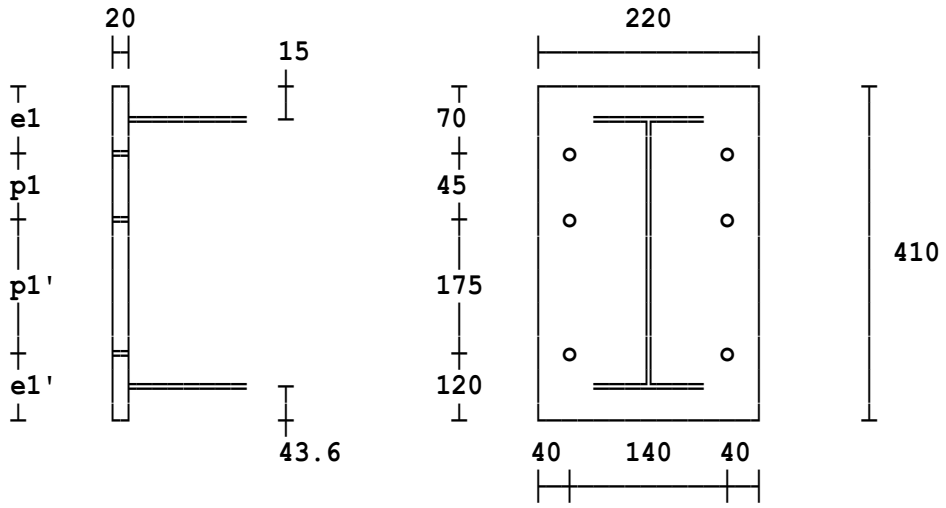

Number of bolts	**6**
Bolt diameter	**16 mm**
Bolt grade	**Preloaded HSFG bolts**
	General grade (8.8) with grade 10 nuts.
Welds	**Tension flange fillet weld 8 mm**
	Web fillet weld 8 mm
	Compression flange fillet weld 8 mm
Supporting column section	**254 x 254 x 73 UKC**
Beam / Rafter section	**356 x 171 x 45 UKB**

Column stiffener details

No enhancement of the column is required.
The connection under consideration is two sided.

Location: Ex1 - Based on Joints publication

The calculations are in accordance with BS5950-1:2000 and follow the procedure given in the SCI publication 207/95 entitled 'Joints in Steel Construction Moment Connections'.

Bolted end plate beam splice one-way extended

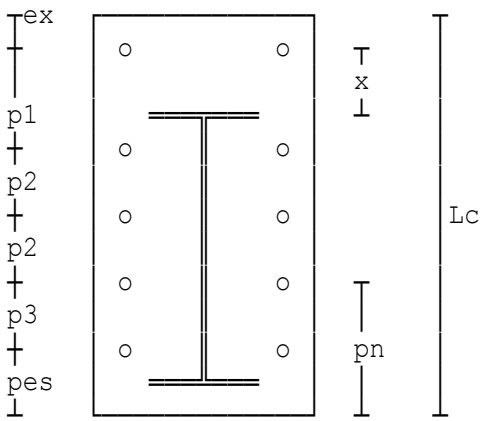

Design assumptions:
- all bolts are subject to tension
- shear is evenly distributed between the tension bolts
- the connection consists of two identical beam and end plate arrangements
- moment is not reversible.
- pes is the edge distance to shear bolts if provided.

Factored moment	M=410 kNm
Factored shear force	V=60 kN
Axial force (+ve compression)	N=0 kN

533 x 210 x 92 UB.

Diameter of bolts	bd=24 mm
Thickness of plate	tp=25 mm
Total number of tension bolts	bn=6
Distance to first row of bolts	ex=50 mm
Distance to beam flange	x=40 mm
Pitch to second row of bolts	p1=100 mm
Pitch of tension bolts	p2=90 mm
Edge distance to bottom of flange	ped=36.9 mm
Edge distance to shear bolts	pes=100 mm
Bolt cross-centres	g=100 mm
Width of end plate	bp=250 mm
Assumed web fillet weld size	sww=8 mm
Assumed flange fillet weld size	swf=12 mm

SUMMARY OF BOLT POTENTIAL RESISTANCES

Top row of bolts	Pr1=370.98 kN
Row 2	Pr2=395.36 kN
Row 3	Pr3=318.89 kN

Beam tension flange welds

As an alternative to a single fillet weld of minimum size 15 mm
a partial penetration butt weld with a superimposed fillet weld
will probably be a more economical solution.
Penetration butt weld size sbt=8 mm
Superimposed fillet weld size swt=10 mm
Tension stress ≤ pyb (275 N/mm²), hence OK.
Tension stress ≤ pyb (275 N/mm²), hence OK.
Shear stress ≤ allowable shear stress, hence OK.
Provide partial penetration butt welds (8 mm preparation), with
10 mm superimposed fillet welds.

Beam web welds

Tension zone - a full strength weld is recommended in the web tension
zone with the sum of the throat thicknesses ≥ the web thickness, tb.
Selected fillet weld size sfw=8 mm
Length of web weld Lwt=(p1-x-Tb-rb)+(nt/2-2)*p2+1.73*g
/2=208.2 mm

Shear zone - assuming a fillet weld of 8 mm continued for the full
depth, the capacity of the beam web weld for vertical shear:
Length of weld for shear Lws=Db-2*(Tb+rb)-Lwt=268.3 mm
Capacity of weld for shear Psw=2*0.7*sfw*pw*Lws/10^3=661.09 kN
Vertical shear V=60 kN
Web weld size 8 mm is considered to be suitable.

Compression welds

Assuming a bearing fit between the flange and end plate, the use of
an 8 mm fillet weld will suffice for the beam compression flange.

CONNECTION SUMMARY - all dimensions in diagram are in mm

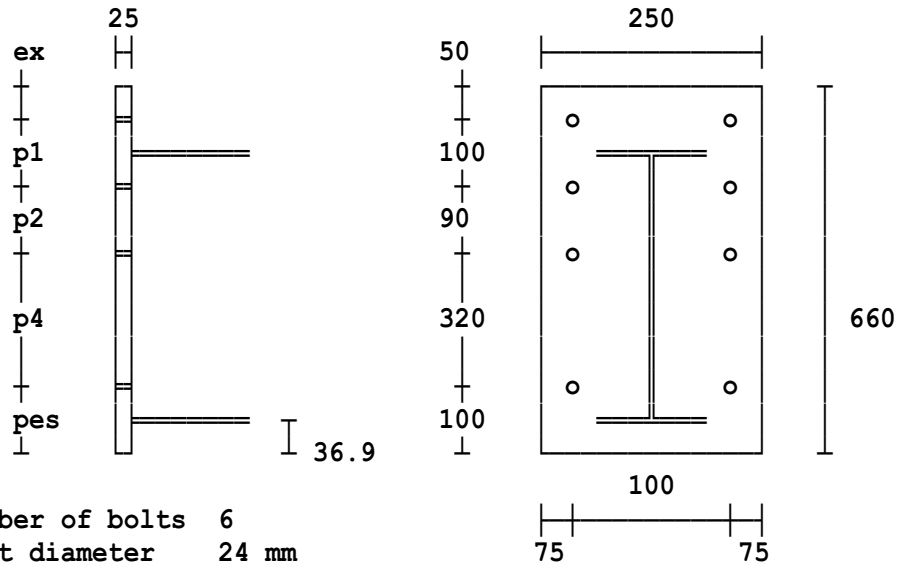

Number of bolts	**6**	
Bolt diameter	**24 mm**	
Bolt grade	**8.8**	
Tension	**Partial penetration butt welds**	**8 mm**
Flange Welds	**Superimposed fillet welds**	**10 mm**
	Web fillet weld	**8 mm**
	Compression flange fillet weld	**8 mm**
Beam / Rafter section	**533 x 210 x 92 UB**	

Location: Ex2 - Reversible moment 12 bolts

The calculations are in accordance with BS5950-1:2000 and follow the procedure given in the SCI publication 207/95 entitled 'Joints in Steel Construction Moment Connections'.

Bolted end plate beam splice two-way extended

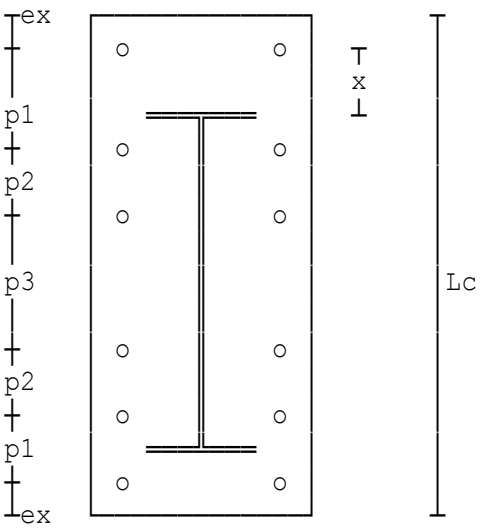

Design assumptions:
- the bolt arrangement is symmetrical about the centre line (x-x axis) of beam
- moment is reversible
- moment is carried by half the bolts
- shear is carried by the other half of the bolts.
- the connection consists of two identical beam & end plate arrangements.

Factored moment	M=510 kNm
Factored shear force	V=129 kN
Axial force (+ve compression)	N=0 kN

533 x 210 x 92 UB.

Diameter of bolts	bd=24 mm
Thickness of plate	tp=25 mm
Total number of tension bolts	bn=12
Distance to first row of bolts	ex=50 mm
Distance to beam flange	x=40 mm
Pitch to second row of bolts	p1=100 mm
Pitch of tension bolts	p2=90 mm
Bolt cross-centres	g=100 mm
Width of end plate	bp=250 mm
Assumed web fillet weld size	sww=8 mm
Assumed flange fillet weld size	swf=12 mm

SUMMARY OF BOLT POTENTIAL RESISTANCES

Top row of bolts	Pr1=370.98 kN
Row 2	Pr2=395.36 kN
Row 3	Pr3=318.89 kN

Beam tension flange welds

As an alternative to a single fillet weld of minimum size 15 mm
a partial penetration butt weld with a superimposed fillet weld
will probably be a more economical solution.
Penetration butt weld size sbt=8 mm
Superimposed fillet weld size swt=10 mm
Tension stress ≤ pyb (275 N/mm²), hence OK.
Tension stress ≤ pyb (275 N/mm²), hence OK.
Shear stress ≤ allowable shear stress, hence OK.
Provide partial penetration butt welds (8 mm preparation), with
10 mm superimposed fillet welds.

Beam web welds

Tension zone - a full strength weld is recommended in the web tension
zone with the sum of the throat thicknesses ≥ the web thickness, tb.
Selected fillet weld size sfw=8 mm
Length of web weld Lwt=(p1-x-Tb-rb)+(nt/2-2)*p2+1.73*g
/2=208.2 mm

Shear zone - assuming a fillet weld of 8 mm continued for the full
depth, the capacity of the beam web weld for vertical shear:
Length of weld for shear Lws=Db-2*(Tb+rb)-Lwt=268.3 mm
Capacity of weld for shear Psw=2*0.7*sfw*pw*Lws/10^3=661.09 kN
Vertical shear V=129 kN
Web weld size 8 mm is considered to be suitable.

Compression welds

As moment is reversible tension and compression surfaces are
interchangeable, welding must be the same for both flanges.

CONNECTION SUMMARY - all dimensions in diagram are in mm

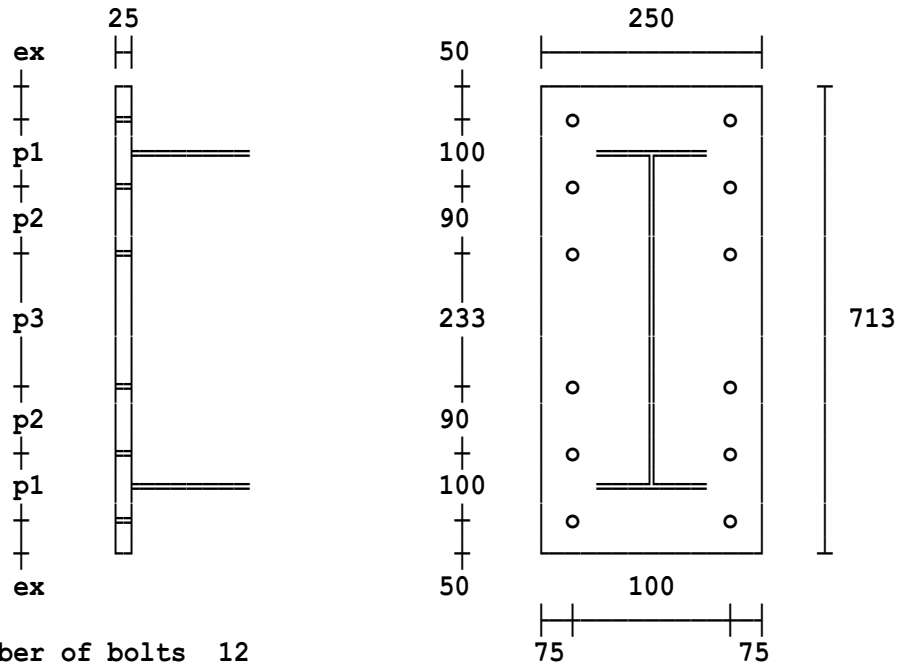

Number of bolts	**12**	
Bolt diameter	**24 mm**	
Bolt grade	**8.8**	
Tension	**Partial penetration butt welds**	**8 mm**
Flange Welds	**Superimposed fillet welds**	**10 mm**
	Web fillet weld	**8 mm**
Compression	**Partial penetration butt welds**	**8 mm**
Flange Welds	**Superimposed fillet welds**	**10 mm**

Beam / Rafter section 533 x 210 x 92 UB

Location: Ex3 - Reversible moment 8 bolts

The calculations are in accordance with BS5950-1:2000 and follow the procedure given in the SCI publication 207/95 entitled 'Joints in Steel Construction Moment Connections'.

Bolted end plate beam splice two-way extended

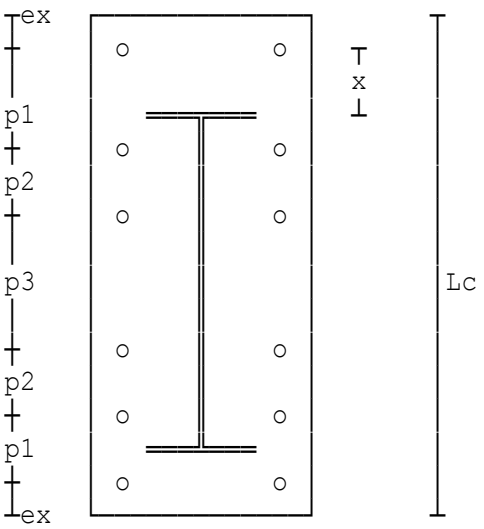

Design assumptions:
- the bolt arrangement is symmetrical about the centre line (x-x axis) of beam
- moment is reversible
- moment is carried by half the bolts
- shear is carried by the other half of the bolts.
- the connection consists of two identical beam & end plate arrangements.

Factored moment	M=46 kNm
Factored shear force	V=60 kN
Axial force (+ve compression)	N=0 kN

178 x 102 x 19 UB.

Diameter of bolts	bd=20 mm
Thickness of plate	tp=20 mm
Total number of tension bolts	bn=8
Distance to first row of bolts	ex=40 mm
Distance to beam flange	x=35 mm
Pitch to second row of bolts	p1=80 mm
Bolt cross-centres	g=60 mm
Width of end plate	bp=120 mm
Assumed web fillet weld size	sww=6 mm
Assumed flange fillet weld size	swf=6 mm

SUMMARY OF BOLT POTENTIAL RESISTANCES

Top row of bolts	Pr1=207.41 kN
Row 2	Pr2=289.1 kN

Slip factor for preloaded bolts mu=0.5
Coefficient for type of hole Ks=1

Beam tension flange welds

Selected fillet weld size swt=8 mm

Beam web welds

Tension zone - a full strength weld is recommended in the web tension zone with the sum of the throat thicknesses ≥ the web thickness, tb.
Selected fillet weld size sfw=8 mm
Length of web weld Lwt=(p1-x-Tb-rb)+1.73*g/2=81.4 mm

Shear zone - assuming a fillet weld of 8 mm continued for the full depth, the capacity of the beam web weld for vertical shear:
Length of weld for shear Lws=Db-2*(Tb+rb)-Lwt=65.4 mm
Capacity of weld for shear Psw=2*0.7*sfw*pw*Lws/10^3=161.15 kN
Vertical shear V=60 kN
Web weld size 8 mm is considered to be suitable.

Compression welds

As moment is reversible tension and compression surfaces are interchangeable, welding must be the same for both flanges.

CONNECTION SUMMARY - all dimensions in diagram are in mm

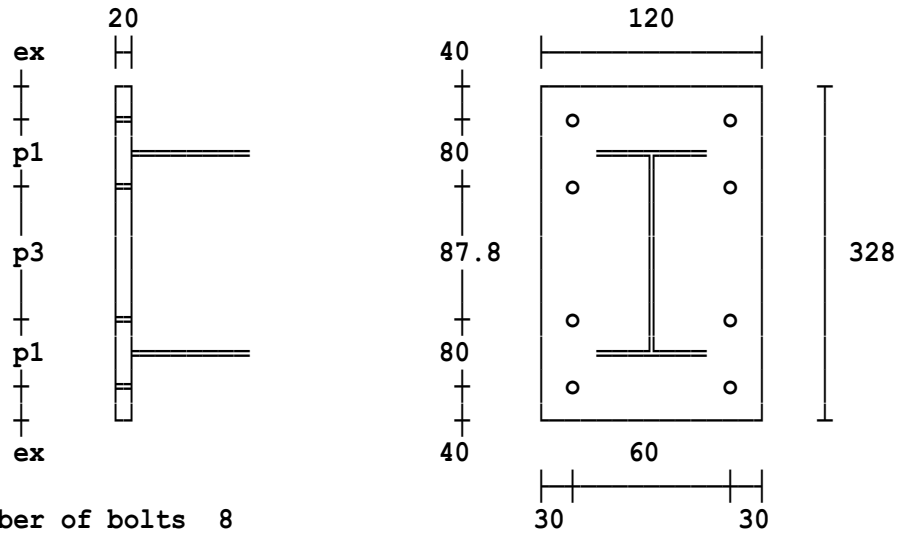

Number of bolts 8
Bolt diameter 20 mm
Bolt grade HSFG
General grade (8.8) to BS4395 Part 1. Nuts grade 10.
Welds Tension flange fillet weld 8 mm
Web fillet weld 8 mm
Compression flange fillet weld 8 mm
Beam / Rafter section 178 x 102 x 19 UB

Location: Ex4 - Larger beam no shear bolts

The calculations are in accordance with BS5950-1:2000 and follow the procedure given in the SCI publication 207/95 entitled 'Joints in Steel Construction Moment Connections'.

Bolted end plate beam splice one-way extended

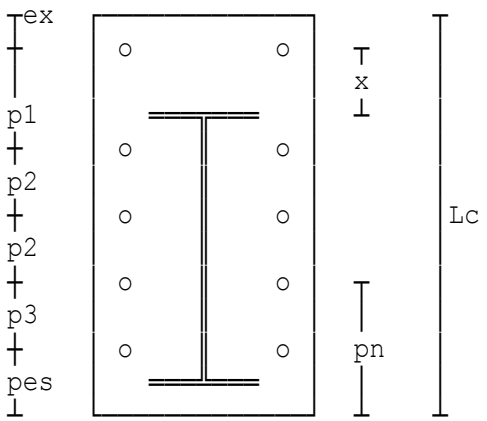

Design assumptions:
- all bolts are subject to tension
- shear is evenly distributed between the tension bolts
- the connection consists of two identical beam and end plate arrangements
- moment is not reversible.
- pes is the edge distance to shear bolts if provided.

Factored moment	M=772 kNm
Factored shear force	V=238 kN
Axial force (+ve compression)	N=0 kN

686 x 254 x 152 UB.

Diameter of bolts	bd=24 mm
Thickness of plate	tp=25 mm
Total number of tension bolts	bn=12
Distance to first row of bolts	ex=50 mm
Distance to beam flange	x=40 mm
Pitch to second row of bolts	p1=100 mm
Pitch of tension bolts	p2=90 mm
Edge distance to bottom of flange	ped=42.5 mm
Bolt cross-centres	g=140 mm
Width of end plate	bp=230 mm
Assumed web fillet weld size	sww=10 mm
Assumed flange fillet weld size	swf=15 mm

SUMMARY OF BOLT POTENTIAL RESISTANCES

Top row of bolts	Pr1=370.81 kN
Row 2	Pr2=395.36 kN
Row 3	Pr3=315.46 kN
Row 4	Pr4=251.44 kN
Row 5	Pr5=222.35 kN
Row 6	Pr6=164.68 kN

Beam tension flange welds

As an alternative to a single fillet weld of minimum size 16 mm
a partial penetration butt weld with a superimposed fillet weld
will probably be a more economical solution.
Penetration butt weld size sbt=9 mm
Superimposed fillet weld size swt=11 mm
Tension stress ≤ pyb (265 N/mm²), hence OK.
Tension stress ≤ pyb (265 N/mm²), hence OK.
Shear stress ≤ allowable shear stress, hence OK.
Provide partial penetration butt welds (9 mm preparation), with
11 mm superimposed fillet welds.

Beam web welds

Tension zone - a full strength weld is recommended in the web tension
zone with the sum of the throat thicknesses ≥ the web thickness, tb.
Selected fillet weld size sfw=10 mm
Length of web weld Lwt=(p1-x-Tb-rb)+(nt/2-2)*p2+1.73*g
/2=504.9 mm

Shear zone - assuming a fillet weld of 10 mm continued for the full
depth, the capacity of the beam web weld for vertical shear:
Length of weld for shear Lws=Db-2*(Tb+rb)-Lwt=110.2 mm
Capacity of weld for shear Psw=2*0.7*sfw*pw*Lws/10^3=339.42 kN
Vertical shear V=238 kN
Web weld size 10 mm is considered to be suitable.

Compression welds

Assuming a bearing fit between the flange and end plate, the use of
an 8 mm fillet weld will suffice for the beam compression flange.

CONNECTION SUMMARY - all dimensions in diagram are in mm

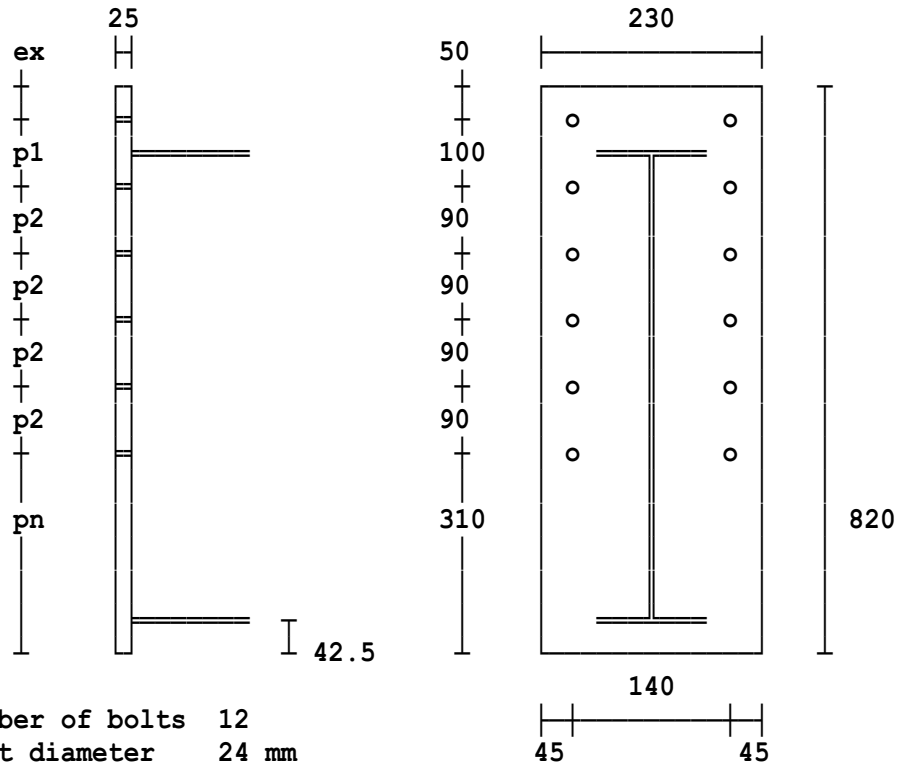

Number of bolts	**12**	
Bolt diameter	**24 mm**	
Bolt grade	**8.8**	
Tension	**Partial penetration butt welds**	**9 mm**
Flange Welds	**Superimposed fillet welds**	**11 mm**
	Web fillet weld	**10 mm**
	Compression flange fillet weld	**8 mm**
Beam / Rafter section	**686 x 254 x 152 UB**	

Location: Ex1 - Based on Joints publication with shear bolts

Bolted end plate beam splice one-way extended

Calculations are in accordance with EC3 Parts 1-1, 1-5, 1-8 and follow the procedure given in the SCI publication P398 entitled 'Joints in Steel Construction Moment-Resisting Joints to EC3'. The connection is attached to the supporting column flange.
The bolted end plate beam splice is one-way extended.

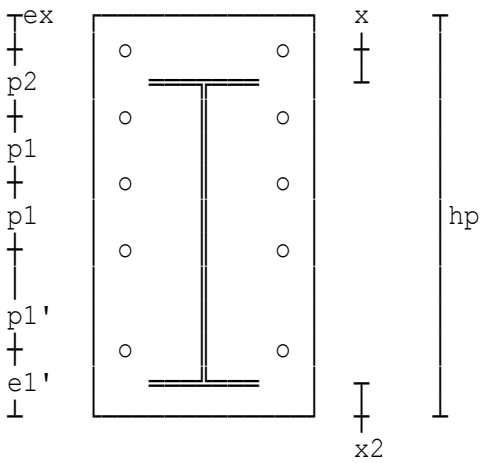

Design assumptions:
- all bolts are in tension except of the bottom two which will resist all the applied shear load
- the connection consists of two identical beam and end plate arrangements
- moment is not reversible
- p1' is the distance between tension and shear bolts.

Factored moment	MyEd=410 kNm
Factored shear force	VEd=60 kN
Axial force (+ve compression)	NEd=0 kN

Supported beam details

533 x 210 x 92 UKB

Bolt details

Diameter of bolts	db=24 mm
Tensile resistance (EC3 Part 1-8)	FtRd=k2*fub*At/(gamM2*10^3)=203.33 kN

End plate details

Thickness of plate	tp=25 mm
Distance to first row of bolts	ex=50 mm
Distance to beam flange	x=40 mm
Pitch to second row of bolts	p2=100 mm
Pitch of tension bolts	p1=90 mm
Edge distance to bottom of flange	x2=36.9 mm
Edge distance to shear bolts	e1'=100 mm
Bolt cross-centres	p3=100 mm
Width of end plate	bp=250 mm
Assumed web fillet weld size	sww=8 mm
Assumed flange fillet weld size	swf=12 mm

SUMMARY OF BOLT POTENTIAL RESISTANCES

Top row of bolts	Pr1=377.26 kN
Row 2	Pr2=406.66 kN
Row 3	Pr3=328 kN
Resistance of beam flange	FcRd=1257 kN

Beam tension flange welds

Weld design strength fvwd=fu/SQR(3)/(betaw*gamM2)
=222.79 N/mm²

The force in the tension flange welds is the lesser of:

Tension resistance of the flange	Tf=bb*tfb*fyb/10^3=897.9 kN
Tension force in top 3 bolt rows	Tfc=Pr1+Pr2+Pr3=1111.9 kN
Weld size required	swfr=FwEdf*10^3/(0.7*fvwd)=14.094 mm
Penetration butt weld size	sbt=8 mm
Superimposed fillet weld size	swt=12 mm

Tension stress ≤ fyb (275 N/mm²), hence OK.
Tension stress ≤ fyb (275 N/mm²), hence OK.
Shear stress ≤ allowable shear stress, hence OK.
Provide partial penetration butt welds (8 mm preparation), with 12 mm superimposed fillet welds.

Beam web welds

Tension zone - a full strength weld is recommended in the web tension zone with the sum of the throat thicknesses ≥ the web thickness, twb.
Selected fillet weld size sfw=8 mm

Shear zone - assume an 8 mm FW continued for the full depth.

Length of weld for shear	Lws=hb-2*(tfb+rb)-Lwt=268.3 mm
Resistance of weld for shear	FwRds=2*0.7*sfw*fvwd*Lws/10^3 =669.47 kN
Vertical shear	VEd=60 kN

An 8 mm fillet weld size is therefore considered suitable.

Compression welds

Assuming a bearing fit between the flange and end plate, the use of an 8 mm fillet weld will suffice for the beam compression flange.

CONNECTION SUMMARY - all dimensions in diagram are in mm

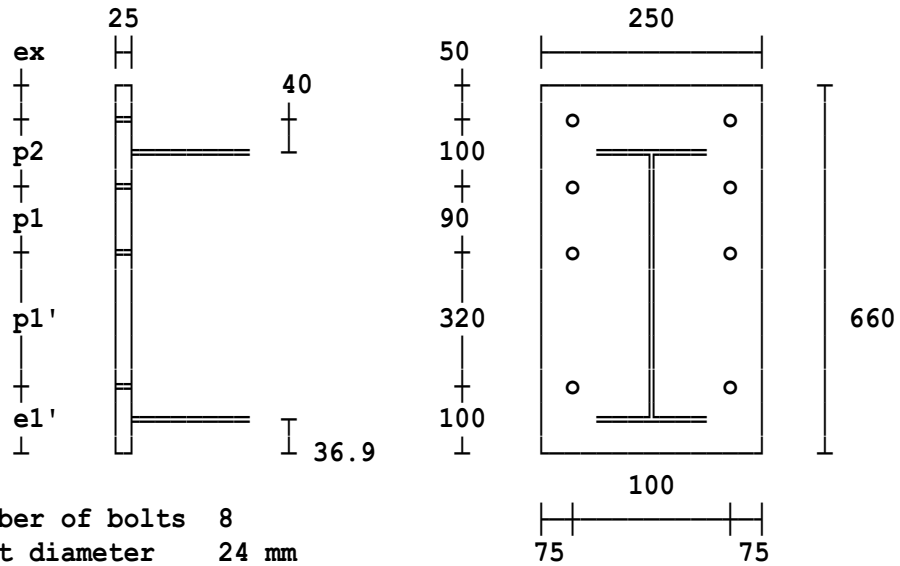

Number of bolts	**8**	
Bolt diameter	**24 mm**	
Bolt grade	**8.8**	
Tension	**Partial penetration butt welds**	**8 mm**
Flange Welds	**Superimposed fillet welds**	**12 mm**
	Web fillet weld	**8 mm**
	Compression flange fillet weld	**8 mm**

Beam / Rafter section 533 x 210 x 92 UKB

Location: Ex2 - Reversible moment 12 bolts

Bolted end plate beam splice one-way extended

Calculations are in accordance with EC3 Parts 1-1, 1-5, 1-8 and follow the procedure given in the SCI publication P398 entitled 'Joints in Steel Construction Moment-Resisting Joints to EC3'. The connection is attached to the supporting column flange.
The bolted end plate beam splice is two-way extended.

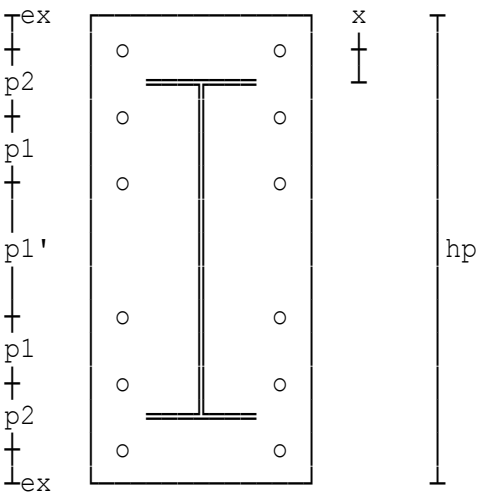

Design assumptions:
- the bolt arrangement is symmetrical about the centre line (y-y axis) of beam
- moment is reversible
- moment is carried by half the bolts
- shear is carried by the other half of the bolts
- the connection consists of two identical beam and end plate arrangements
- p1' is the distance between tension and shear bolts.

Factored moment	MyEd=510 kNm
Factored shear force	VEd=129 kN
Axial force (+ve compression)	NEd=0 kN

Supported beam details

533 x 210 x 92 UKB

Bolt details

Diameter of bolts	db=24 mm
Tensile resistance (EC3 Part 1-8)	FtRd=k2*fub*At/(gamM2*10^3)=203.33 kN

End plate details

Thickness of plate	tp=25 mm
Distance to first row of bolts	ex=50 mm
Distance to beam flange	x=40 mm
Pitch to second row of bolts	p2=100 mm
Pitch of tension bolts	p1=90 mm
Bolt cross-centres	p3=100 mm
Width of end plate	bp=250 mm
Assumed web fillet weld size	sww=8 mm
Assumed flange fillet weld size	swf=12 mm

SUMMARY OF BOLT POTENTIAL RESISTANCES

Top row of bolts	Pr1=377.26 kN
Row 2	Pr2=406.66 kN
Row 3	Pr3=328 kN
Resistance of beam flange	FcRd=1257 kN

Beam tension flange welds

Weld design strength fvwd=fu/SQR(3)/(betaw*gamM2)
=222.79 N/mm²

The force in the tension flange welds is the lesser of:

Tension resistance of the flange	Tf=bb*tfb*fyb/10^3=897.9 kN
Tension force in top 3 bolt rows	Tfc=Pr1+Pr2+Pr3=1111.9 kN
Weld size required	swfr=FwEdf*10^3/(0.7*fvwd)=14.094 mm
Penetration butt weld size	sbt=8 mm
Superimposed fillet weld size	swt=12 mm

Tension stress ≤ fyb (275 N/mm²), hence OK.
Tension stress ≤ fyb (275 N/mm²), hence OK.
Shear stress ≤ allowable shear stress, hence OK.
Provide partial penetration butt welds (8 mm preparation), with 12 mm superimposed fillet welds.

Beam web welds

Tension zone - a full strength weld is recommended in the web tension zone with the sum of the throat thicknesses ≥ the web thickness, twb.
Selected fillet weld size sfw=8 mm

Shear zone - assume an 8 mm FW continued for the full depth.

Length of weld for shear	Lws=hb-2*(tfb+rb)-Lwt=268.3 mm
Resistance of weld for shear	FwRds=2*0.7*sfw*fvwd*Lws/10^3 =669.47 kN
Vertical shear	VEd=129 kN

An 8 mm fillet weld size is therefore considered suitable.

Compression welds

As moment is reversible tension and compression surfaces are interchangeable, welding must be the same for both flanges.

CONNECTION SUMMARY - all dimensions in diagram are in mm

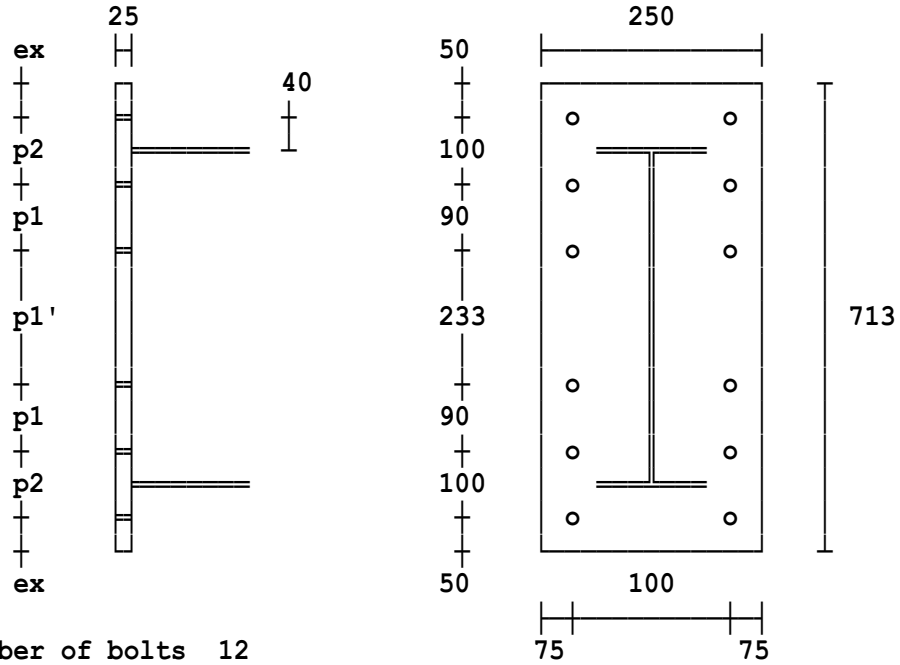

Number of bolts	**12**	
Bolt diameter	**24 mm**	
Bolt grade	**8.8**	
Tension	**Partial penetration butt welds**	**8 mm**
Flange Welds	**Superimposed fillet welds**	**12 mm**
	Web fillet weld	**8 mm**
Compression	**Partial penetration butt welds**	**8 mm**
Flange Welds	**Superimposed fillet welds**	**12 mm**

Beam / Rafter section 533 x 210 x 92 UKB

Location: Ex3 - Reversible moment 8 bolts

Bolted end plate beam splice one-way extended

Calculations are in accordance with EC3 Parts 1-1, 1-5, 1-8 and follow the procedure given in the SCI publication P398 entitled 'Joints in Steel Construction Moment-Resisting Joints to EC3'. The connection is attached to the supporting column flange.
The bolted end plate beam splice is two-way extended.

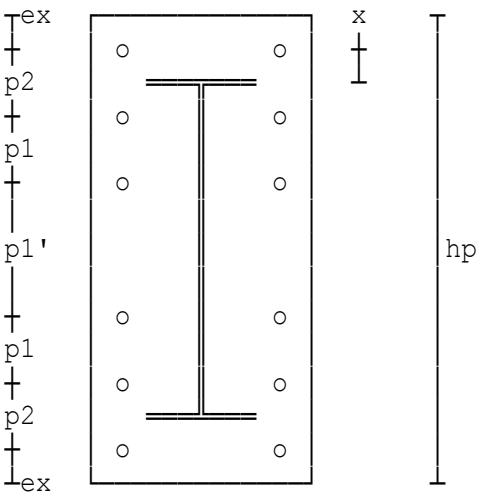

Design assumptions:
- the bolt arrangement is symmetrical about the centre line (y-y axis) of beam
- moment is reversible
- moment is carried by half the bolts
- shear is carried by the other half of the bolts
- the connection consists of two identical beam and end plate arrangements
- p1' is the distance between tension and shear bolts.

Factored moment	MyEd=46 kNm
Factored shear force	VEd=60 kN
Axial force (+ve compression)	NEd=0 kN

Supported beam details

178 x 102 x 19 UKB

Bolt details

Diameter of bolts	db=20 mm
Tensile resistance (EC3 Part 1-8)	FtRd=k2*fub*At/(gamM2*10^3)=141.12 kN

End plate details

Thickness of plate	tp=20 mm
Distance to first row of bolts	ex=40 mm
Distance to beam flange	x=35 mm
Pitch to second row of bolts	p2=80 mm
Bolt cross-centres	p3=60 mm
Width of end plate	bp=120 mm
Assumed web fillet weld size	sww=6 mm
Assumed flange fillet weld size	swf=6 mm

SUMMARY OF BOLT POTENTIAL RESISTANCES

Top row of bolts	Pr1=203.6 kN
Row 2	Pr2=282.24 kN
Resistance of beam flange	FcRd=308 kN

Beam tension flange welds

Weld design strength	fvwd=fu/SQR(3)/(betaw*gamM2) =222.79 N/mm²

The force in the tension flange welds is the lesser of:

Tension resistance of the flange	Tf=bb*tfb*fyb/10^3=219.86 kN
Tension force in top 3 bolt rows	Tfc=Pr1+Pr2+Pr3=308 kN
Weld size required	swfr=FwEdf*10^3/(0.7*fvwd)=7.1345 mm
Selected fillet weld size	swt=8 mm

Beam web welds

Tension zone - a full strength weld is recommended in the web tension zone with the sum of the throat thicknesses ≥ the web thickness, twb.

Selected fillet weld size	sfw=8 mm

Shear zone - assume an 8 mm FW continued for the full depth.

Length of weld for shear	Lws=hb-2*(tfb+rb)-Lwt=65.4 mm
Resistance of weld for shear	FwRds=2*0.7*sfw*fvwd*Lws/10^3 =163.19 kN
Vertical shear	VEd=60 kN

An 8 mm fillet weld size is therefore considered suitable.

Compression welds

As moment is reversible tension and compression surfaces are interchangeable, welding must be the same for both flanges.

CONNECTION SUMMARY - all dimensions in diagram are in mm

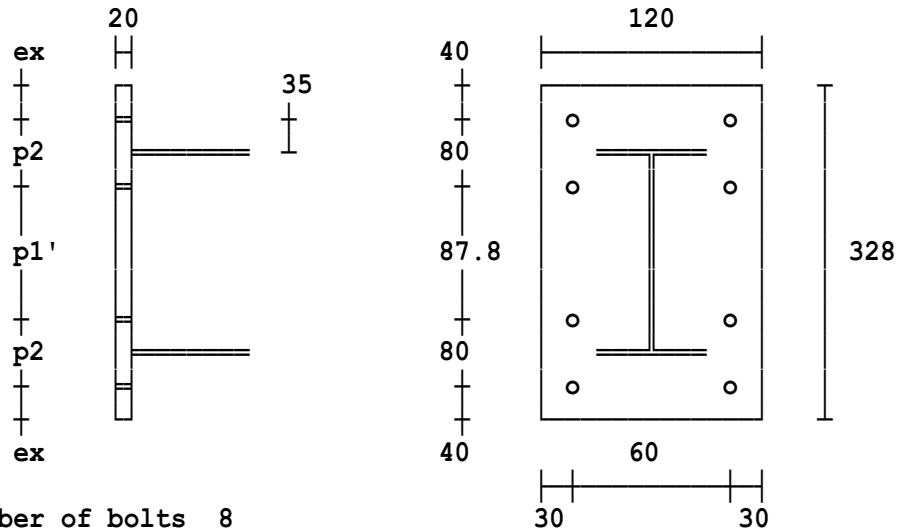

Number of bolts	**8**	
Bolt diameter	**20 mm**	
Bolt grade	**Preloaded HSFG bolts**	
	General grade (8.8) with grade 10 nuts.	
Welds	**Tension flange fillet weld**	**8 mm**
	Web fillet weld	**8 mm**
	Compression flange fillet weld	**8 mm**
Beam / Rafter section	**178 x 102 x 19 UKB**	

Location: Ex4 - Larger beam with shear bolts

Bolted end plate beam splice one-way extended

Calculations are in accordance with EC3 Parts 1-1, 1-5, 1-8 and follow the procedure given in the SCI publication P398 entitled 'Joints in Steel Construction Moment-Resisting Joints to EC3'. The connection is attached to the supporting column flange.
The bolted end plate beam splice is one-way extended.

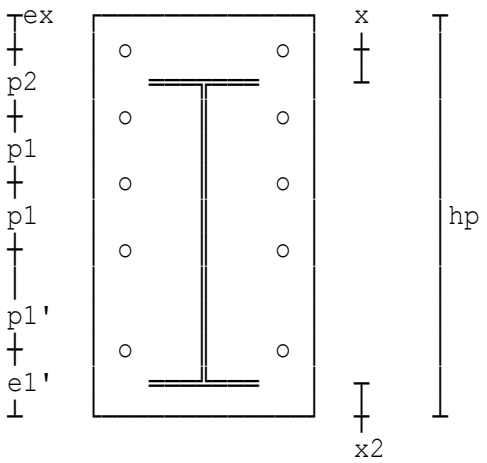

Design assumptions:
- all bolts are in tension except of the bottom two which will resist all the applied shear load
- the connection consists of two identical beam and end plate arrangements
- moment is not reversible
- p1' is the distance between tension and shear bolts.

Factored moment	MyEd=772 kNm
Factored shear force	VEd=215 kN
Axial force (+ve compression)	NEd=0 kN

Supported beam details

686 x 254 x 152 UKB

Bolt details

Diameter of bolts	db=24 mm
Tensile resistance (EC3 Part 1-8)	FtRd=k2*fub*At/(gamM2*10^3)=203.33 kN

End plate details

Thickness of plate	tp=25 mm
Distance to first row of bolts	ex=50 mm
Distance to beam flange	x=40 mm
Pitch to second row of bolts	p2=100 mm
Pitch of tension bolts	p1=90 mm
Edge distance to bottom of flange	x2=42.5 mm
Edge distance to shear bolts	e1'=100 mm
Bolt cross-centres	p3=140 mm
Width of end plate	bp=230 mm
Assumed web fillet weld size	sww=10 mm
Assumed flange fillet weld size	swf=15 mm

SUMMARY OF BOLT POTENTIAL RESISTANCES

Top row of bolts	Pr1=377.09 kN
Row 2	Pr2=406.66 kN
Row 3	Pr3=314.26 kN
Row 4	Pr4=256.5 kN
Row 5	Pr5=228.7 kN
Row 6	Pr6=169.39 kN
Resistance of beam flange	FcRd=1792 kN

Beam tension flange welds

Weld design strength fvwd=fu/SQR(3)/(betaw*gamM2)
=222.79 N/mm²

The force in the tension flange welds is the lesser of:

Tension resistance of the flange	Tf=bp*tfb*fyb/10^3=1280 kN
Tension force in top 3 bolt rows	Tfc=Pr1+Pr2+Pr3=1098 kN
Weld size required	swfr=FwEdf*10^3/(0.7*fvwd)=15.758 mm
Penetration butt weld size	sbt=9 mm
Superimposed fillet weld size	swt=12 mm

Tension stress ≤ fyb (265 N/mm²), hence OK.
Tension stress ≤ fyb (265 N/mm²), hence OK.
Shear stress ≤ allowable shear stress, hence OK.
Provide partial penetration butt welds (9 mm preparation), with 12 mm superimposed fillet welds.

Beam web welds

Tension zone - a full strength weld is recommended in the web tension zone with the sum of the throat thicknesses ≥ the web thickness, twb.
Selected fillet weld size sfw=10 mm

Shear zone - assume an 10 mm FW continued for the full depth.

Length of weld for shear	Lws=hb-2*(tfb+rb)-Lwt=110.2 mm
Resistance of weld for shear	FwRds=2*0.7*sfw*fvwd*Lws/10^3 =343.72 kN
Vertical shear	VEd=215 kN

An 10 mm fillet weld size is therefore considered suitable.

Compression welds

Assuming a bearing fit between the flange and end plate, the use of an 8 mm fillet weld will suffice for the beam compression flange.

CONNECTION SUMMARY - all dimensions in diagram are in mm

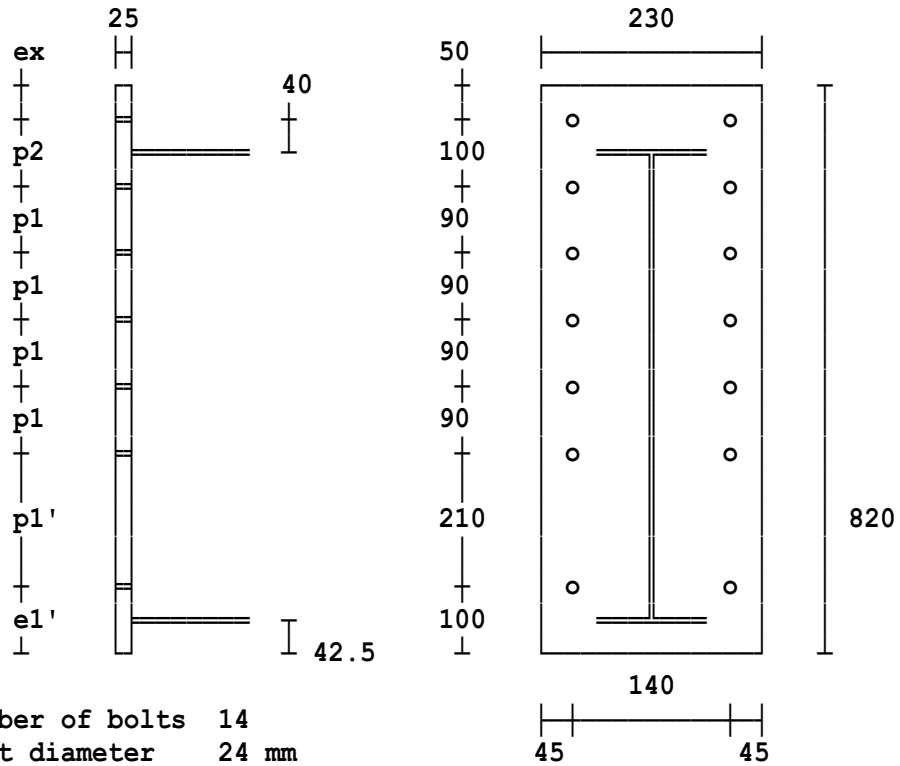

Number of bolts	**14**	
Bolt diameter	**24 mm**	
Bolt grade	**8.8**	
Tension	**Partial penetration butt welds**	**9 mm**
Flange Welds	**Superimposed fillet welds**	**12 mm**
	Web fillet weld	**10 mm**
	Compression flange fillet weld	**8 mm**

Beam / Rafter section 686 x 254 x 152 UKB

Location: Ex1 - Based on Joints publication

Flush beam splice

The calculations are in accordance with BS5950-1:2000 and follow the procedure given in the SCI publication 207/95 entitled 'Joints in Steel Construction Moment Connections'.

Bolted end plate beam splice one-way

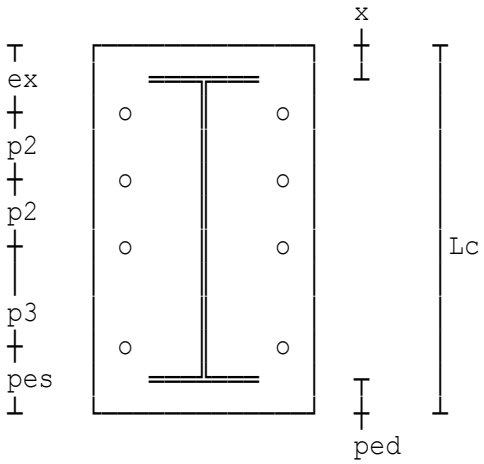

Design assumptions:
- all bolts are subject to tension
- shear is evenly distributed between the bolts end plate arrangements
- the connection consists of two identical beam and end plate arrangements
- moment is not reversible
- pes is the edge distance to shear bolts if provided.

Factored moment	M=405 kNm
Factored shear force	V=60 kN
Axial force (+ve compression)	N=0 kN

Supported beam details

533 x 210 x 92 UB.

Bolt details

Diameter of bolts	bd=24 mm

End plate details

Thickness of plate	tp=25 mm
Total number of bolts	bn=8
Distance to first row of bolts	ex=75 mm
Distance to beam top flange	x=15 mm
Pitch of tension bolts	p2=90 mm
Edge distance to bottom of flange	ped=36.9 mm
Bolt cross-centres	g=100 mm
Width of end plate	bp=250 mm
Assumed web fillet weld size	sww=8 mm
Assumed flange fillet weld size	swf=12 mm

SUMMARY OF BOLT POTENTIAL RESISTANCES

Top row of bolts	Pr1=395.36 kN
Row 2	Pr2=318.89 kN
Row 3	Pr3=242.42 kN
Row 4	Pr4=165.94 kN

WELD DESIGN

Beam tension flange welds

Weld design strength	pw=220 N/mm²
Weld size required	swfr=Fw*10^3/(0.7*pw)=11.354 mm
Selected fillet weld size	swt=12 mm

Beam web welds

Tension zone - a full strength weld is recommended in the web tension zone with the sum of the throat thicknesses ≥ the web thickness, tb.

Selected fillet weld size sfw=8 mm

Shear zone - assuming a fillet weld of 8 mm continued for the full depth, the capacity of the beam web weld for vertical shear:

Length of weld for shear	Lws=Db-2*(Tb+rb)-Lwt=88.3 mm
Capacity of weld for shear	Psw=2*0.7*sfw*pw*Lws/10^3=217.57 kN
Vertical shear	V=60 kN

Web weld size 8 mm is considered to be suitable.

Compression welds

Assuming a bearing fit between the flange and end plate, the use of an 8 mm fillet weld will suffice for the beam compression flange.

CONNECTION SUMMARY - all dimensions in diagram are in mm

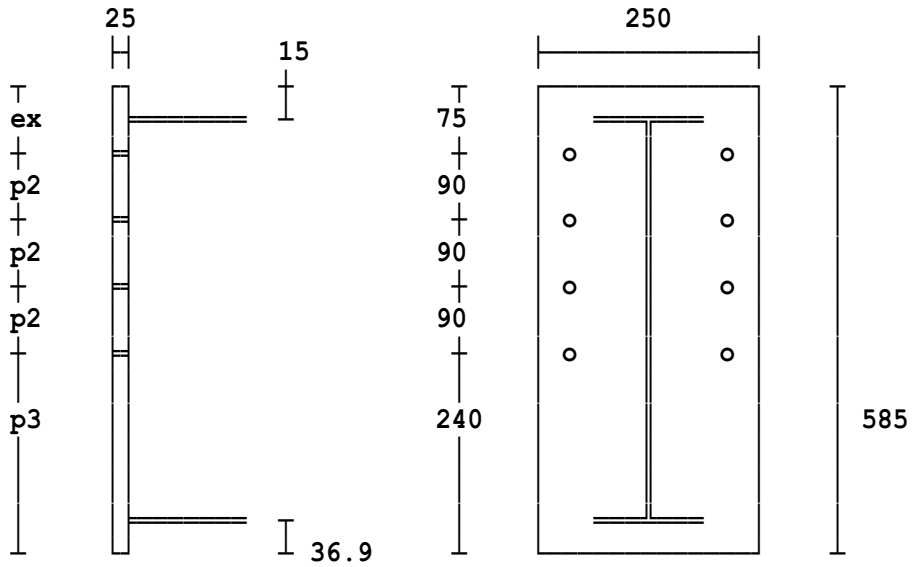

Number of bolts	**8**	
Bolt diameter	**24 mm**	
Bolt grade	**8.8**	
Welds	**Tension flange fillet weld**	**12 mm**
	Web fillet weld	**8 mm**
	Compression flange fillet weld	**8 mm**
Beam / Rafter section	**533 x 210 x 92 UB**	

Location: Ex2 - Based 6 rows of bolts

Flush beam splice

The calculations are in accordance with BS5950-1:2000 and follow the procedure given in the SCI publication 207/95 entitled 'Joints in Steel Construction Moment Connections'.

Bolted end plate beam splice one-way

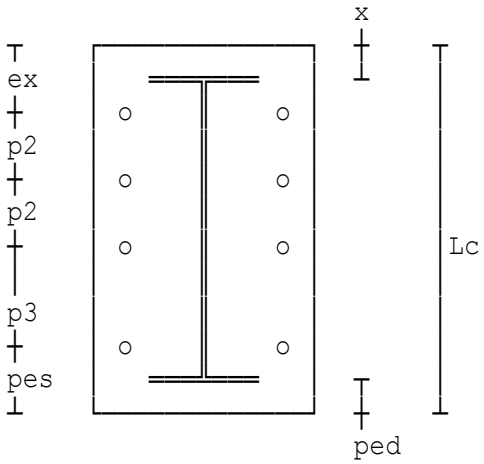

Design assumptions:
- all bolts are subject to tension
- shear is evenly distributed between the bolts end plate arrangements
- the connection consists of two identical beam and end plate arrangements
- moment is not reversible
- pes is the edge distance to shear bolts if provided.

Factored moment	M=610 kNm
Factored shear force	V=60 kN
Axial force (+ve compression)	N=0 kN

Supported beam details

686 x 254 x 125 UB.

Bolt details

Diameter of bolts	bd=24 mm

End plate details

Thickness of plate	tp=25 mm
Total number of bolts	bn=12
Distance to first row of bolts	ex=95 mm
Distance to beam top flange	x=40 mm
Pitch of tension bolts	p2=90 mm
Edge distance to bottom of flange	ped=42.9 mm
Edge distance to shear bolts	pes=100 mm
Bolt cross-centres	g=100 mm
Width of end plate	bp=260 mm
Assumed web fillet weld size	sww=8 mm
Assumed flange fillet weld size	swf=12 mm

SUMMARY OF BOLT POTENTIAL RESISTANCES

Top row of bolts	Pr1=395.36 kN
Row 2	Pr2=337.48 kN
Row 3	Pr3=279.61 kN
Row 4	Pr4=221.73 kN
Row 5	Pr5=163.85 kN
Row 6	Pr6=105.98 kN

WELD DESIGN

Beam tension flange welds

Weld design strength	pw=220 N/mm²
Weld size required	swfr=Fw*10^3/(0.7*pw)=9.6272 mm
Selected fillet weld size	swt=10 mm

Beam web welds

Tension zone - a full strength weld is recommended in the web tension zone with the sum of the throat thicknesses ≥ the web thickness, tb.

Selected fillet weld size sfw=9 mm

Shear zone - assuming a fillet weld of 9 mm continued for the full depth, the capacity of the beam web weld for vertical shear:

Length of weld for shear	Lws=Db-2*(Tb+rb)-Lwt=55 mm
Capacity of weld for shear	Psw=2*0.7*sfw*pw*Lws/10^3=152.46 kN
Vertical shear	V=60 kN

Web weld size 9 mm is considered to be suitable.

Compression welds

Assuming a bearing fit between the flange and end plate, the use of an 8 mm fillet weld will suffice for the beam compression flange.

CONNECTION SUMMARY - all dimensions in diagram are in mm

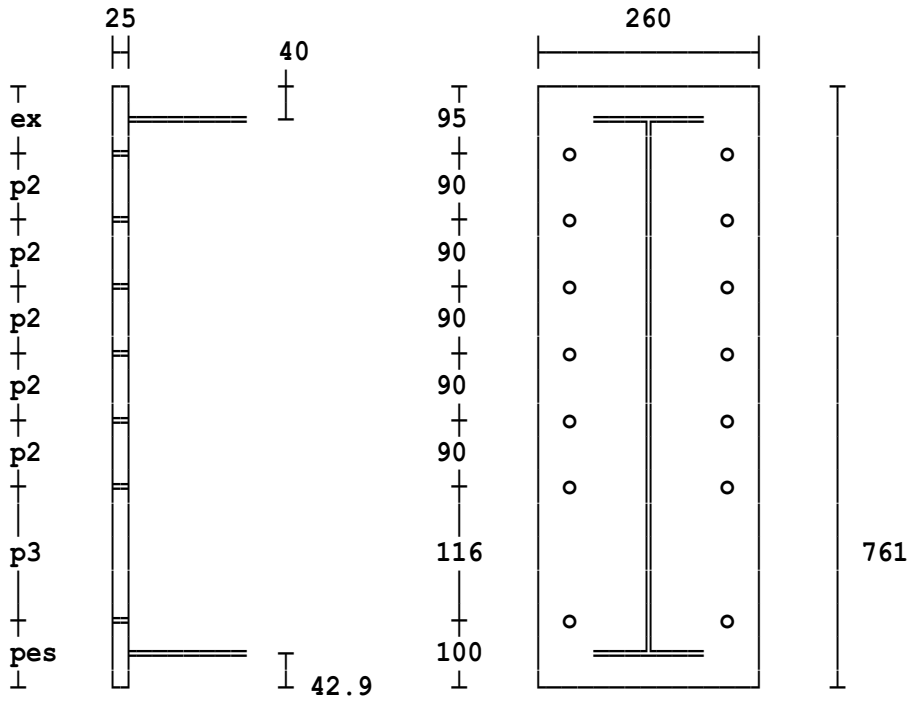

Number of bolts	**12**	
Bolt diameter	**24 mm**	
Bolt grade	**8.8**	
Welds	**Tension flange fillet weld**	**10 mm**
	Web fillet weld	**9 mm**
	Compression flange fillet weld	**8 mm**
Beam / Rafter section	**686 x 254 x 125 UB**	

Location: Ex3 - Reversible moment - 8 bolts

Flush beam splice

The calculations are in accordance with BS5950-1:2000 and follow the procedure given in the SCI publication 207/95 entitled 'Joints in Steel Construction Moment Connections'.

Bolted end plate beam splice two-way

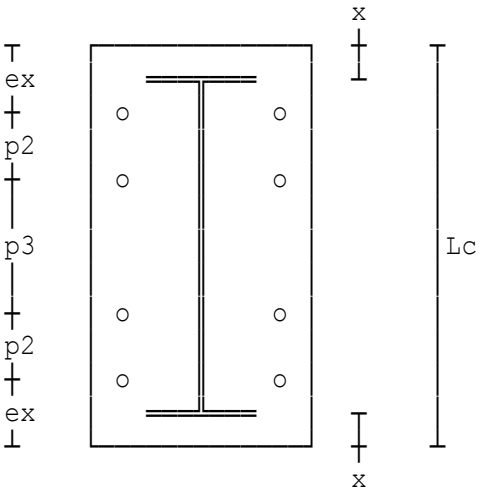

Design assumptions:
- the bolt arrangement is symmetrical about the centre line (x-x axis) of the beam
- moment is reversible
- moment is carried by half of the bolts
- shear is carried by the other half of the bolts
- the connection consists of two identical beam and end plate arrangements.

Factored moment	M=280 kNm
Factored shear force	V=238 kN
Axial force (+ve compression)	N=0 kN

Supported beam details

533 x 210 x 92 UB.

Bolt details

Diameter of bolts	bd=24 mm

End plate details

Thickness of plate	tp=25 mm
Total number of bolts	bn=8
Distance to first row of bolts	ex=90 mm
Edge distance	x=36 mm
Pitch of tension bolts	p2=90 mm
Bolt cross-centres	g=140 mm
Width of end plate	bp=220 mm
Assumed web fillet weld size	sww=8 mm
Assumed flange fillet weld size	swf=12 mm

SUMMARY OF BOLT POTENTIAL RESISTANCES

Top row of bolts	Pr1=395.36 kN
Row 2	Pr2=267.79 kN

WELD DESIGN

Beam tension flange welds

Weld design strength	pw=220 N/mm²
Weld size required	swfr=Fw*10^3/(0.7*pw)=10.541 mm
Selected fillet weld size	swt=12 mm

Beam web welds

Tension zone - a full strength weld is recommended in the web tension zone with the sum of the throat thicknesses ≥ the web thickness, tb.

Selected fillet weld size	sfw=8 mm

Shear zone - assuming a fillet weld of 8 mm continued for the full depth, the capacity of the beam web weld for vertical shear:

Length of weld for shear	Lws=Db-2*(Tb+rb)-Lwt=239.7 mm
Capacity of weld for shear	Psw=2*0.7*sfw*pw*Lws/10^3=590.62 kN
Vertical shear	V=238 kN

Web weld size 8 mm is considered to be suitable.

Compression welds

As moment is reversible tension and compression surfaces are interchangeable, welding must be the same for both flanges.

CONNECTION SUMMARY - all dimensions in diagram are in mm

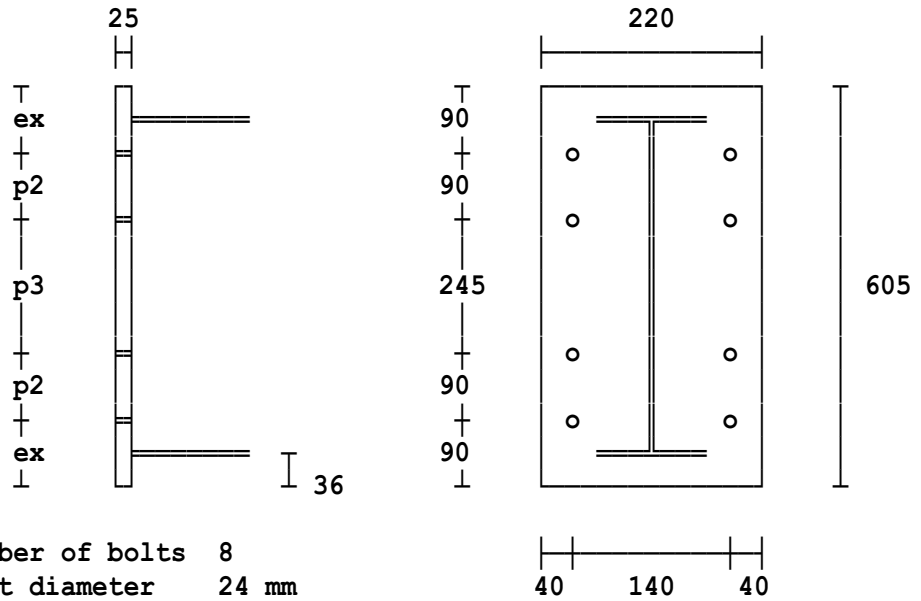

Number of bolts	**8**	
Bolt diameter	**24 mm**	
Bolt grade	**8.8**	
Welds	**Tension flange fillet weld**	**12 mm**
	Web fillet weld	**8 mm**
	Compression flange fillet weld	**12 mm**
Beam / Rafter section	**533 x 210 x 92 UB**	

Location: Ex4 - Minimum size (4 bolts)

Flush beam splice

The calculations are in accordance with BS5950-1:2000 and follow the procedure given in the SCI publication 207/95 entitled 'Joints in Steel Construction Moment Connections'.

Bolted end plate beam splice two-way

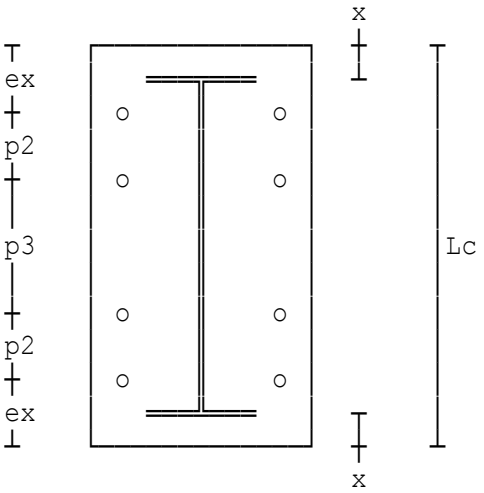

Design assumptions:
- the bolt arrangement is symmetrical about the centre line (x-x axis) of the beam
- moment is reversible
- moment is carried by half of the bolts
- shear is carried by the other half of the bolts
- the connection consists of two identical beam and end plate arrangements.

Factored moment	M=35 kNm
Factored shear force	V=129 kN
Axial force (+ve compression)	N=0 kN

Supported beam details

178 x 102 x 19 UB.

Bolt details

Diameter of bolts	bd=24 mm

End plate details

Thickness of plate	tp=25 mm
Total number of bolts	bn=4
Distance to first row of bolts	ex=80 mm
Edge distance	x=30 mm
Bolt cross-centres	g=60 mm
Width of end plate	bp=120 mm
Assumed web fillet weld size	sww=8 mm
Assumed flange fillet weld size	swf=8 mm

SUMMARY OF BOLT POTENTIAL RESISTANCES

Top row of bolts Pr1=395.36 kN

WELD DESIGN

Beam tension flange welds

Weld design strength pw=220 N/mm²
Weld size required swfr=Fw*10^3/(0.7*pw)=7.2249 mm
Selected fillet weld size swt=8 mm

Beam web welds

Tension zone - a full strength weld is recommended in the web tension zone with the sum of the throat thicknesses ≥ the web thickness, tb.
Selected fillet weld size sfw=8 mm

Shear zone - assuming a fillet weld of 8 mm continued for the full depth, the capacity of the beam web weld for vertical shear:
Length of weld for shear Lws=Db-2*(Tb+rb)-Lwt=60.4 mm
Capacity of weld for shear Psw=2*0.7*sfw*pw*Lws/10^3=148.83 kN
Vertical shear V=129 kN
Web weld size 8 mm is considered to be suitable.

Compression welds

As moment is reversible tension and compression surfaces are interchangeable, welding must be the same for both flanges.

CONNECTION SUMMARY - all dimensions in diagram are in mm

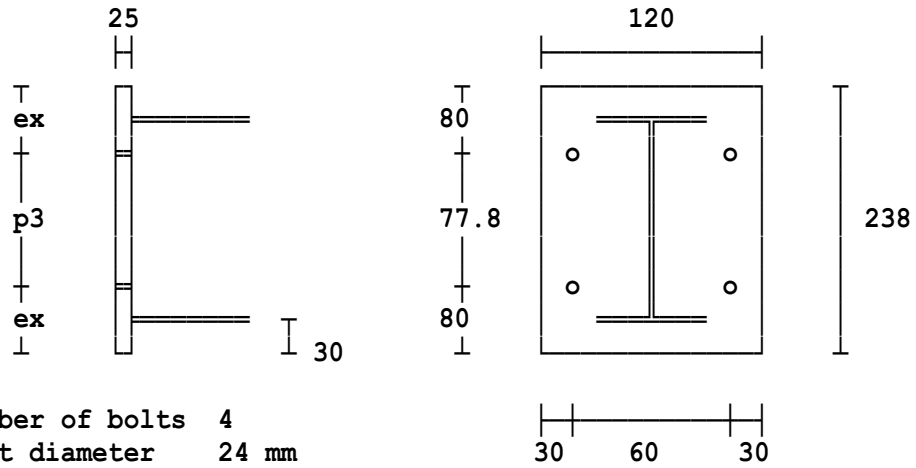

Number of bolts	**4**	
Bolt diameter	**24 mm**	
Bolt grade	**8.8**	
Welds	**Tension flange fillet weld**	**8 mm**
	Web fillet weld	**8 mm**
	Compression flange fillet weld	**8 mm**
Beam / Rafter section	**178 x 102 x 19 UB**	

Location: Ex1 - Based on Joints publication with shear bolts

Flush beam splice

Calculations are in accordance with EC3 Parts 1-1, 1-5, 1-8 and follow the procedure given in the SCI publication P398 entitled 'Joints in Steel Construction Moment-Resisting Joints to Eurocode 3'.

Bolted end plate beam splice one-way (non-reversible moment)

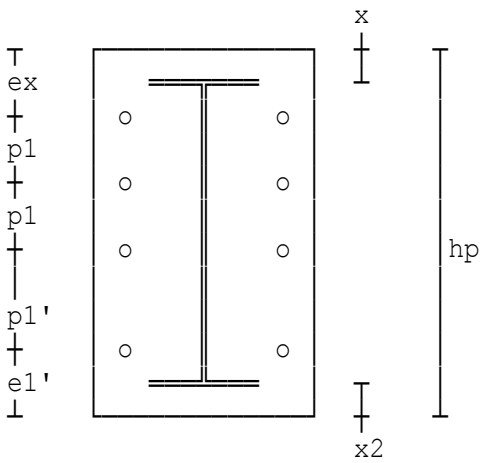

Design assumptions:
- all bolts are in tension except of the bottom two which will resist all the applied shear force
- the connection consists of two identical beam and end plate arrangements
- moment is not reversible.

Factored moment	MyEd=405 kNm
Factored shear force	VEd=60 kN
Axial force (+ve compression)	NEd=0 kN

Supported beam details

533 x 210 x 92 UKB

Bolt details

Diameter of bolts	db=24 mm
Tensile resistance (EC3 Part 1-8)	FtRd=k2*fub*At/(gamM2*10^3)=203.33 kN

End plate details

Thickness of plate	tp=25 mm
Distance to first row of bolts	ex=75 mm
Distance to beam top flange	x=15 mm
Pitch of tension bolts	p1=90 mm
Edge distance to bottom of flange	x2=36.9 mm
Edge distance to shear bolts	e1'=100 mm
Bolt cross-centres	p3=100 mm
Width of end plate	bp=250 mm
Assumed web fillet weld size	sww=8 mm
Assumed flange fillet weld size	swf=12 mm

SUMMARY OF BOLT POTENTIAL RESISTANCES

Top row of bolts	Pr1=406.66 kN
Row 2	Pr2=328 kN
Row 3	Pr3=249.34 kN
Row 4	Pr4=170.69 kN
Resistance of beam flange	FcRd=1257 kN

Beam tension flange welds

Weld design strength	fvwd=fu/SQR(3)/(betaw*gamM2) =222.79 N/mm²
Weld size required	swfr=FwEdf*10^3/(0.7*fvwd)=11.532 mm
Selected fillet weld size	swt=12 mm

Beam web welds

Tension zone - a full strength weld is recommended in the web tension zone with the sum of the throat thicknesses ≥ the web thickness, twb.

Selected fillet weld size	sfw=8 mm
Length of web weld	Lwt=(ex-x-tfb-rb)+(trow-1)*p1+1.73 *p3/2=388.2 mm

Shear zone - assume an 8 mm FW continued for the full depth.

Length of weld for shear	Lws=hb-2*(tfb+rb)-Lwt=88.3 mm
Resistance of weld for shear	FwRds=2*0.7*sfw*fvwd*Lws/10^3 =220.33 kN
Vertical shear	VEd=60 kN

An 8 mm fillet weld size is therefore considered suitable.

Compression welds

Assuming a bearing fit between the flange and end plate, the use of an 8 mm fillet weld will suffice for the beam compression flange.

CONNECTION SUMMARY - all dimensions in diagram are in mm

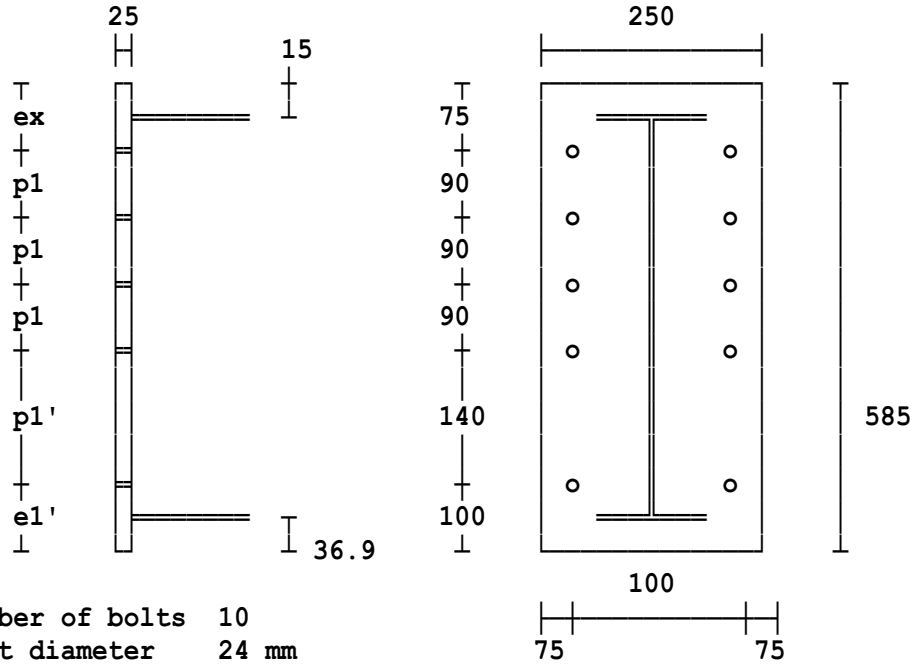

Number of bolts	**10**	
Bolt diameter	**24 mm**	
Bolt grade	**8.8**	
Welds	**Tension flange fillet weld**	**12 mm**
	Web fillet weld	**8 mm**
	Compression flange fillet weld	**8 mm**
Beam / Rafter section	**533 x 210 x 92 UKB**	

Location: Ex2 - Based 6 rows of bolts

Flush beam splice

Calculations are in accordance with EC3 Parts 1-1, 1-5, 1-8 and follow the procedure given in the SCI publication P398 entitled 'Joints in Steel Construction Moment-Resisting Joints to Eurocode 3'.

Bolted end plate beam splice one-way (non-reversible moment)

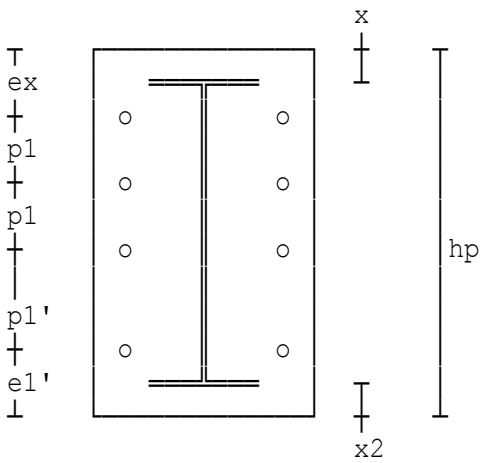

Design assumptions:
- all bolts are in tension except of the bottom two which will resist all the applied shear force
- the connection consists of two identical beam and end plate arrangements
- moment is not reversible.

Factored moment	MyEd=610 kNm
Factored shear force	VEd=60 kN
Axial force (+ve compression)	NEd=0 kN

Supported beam details

686 x 254 x 125 UKB

Bolt details

Diameter of bolts	db=24 mm
Tensile resistance (EC3 Part 1-8)	FtRd=k2*fub*At/(gamM2*10^3)=203.33 kN

End plate details

Thickness of plate	tp=25 mm
Distance to first row of bolts	ex=95 mm
Distance to beam top flange	x=40 mm
Pitch of tension bolts	p1=90 mm
Edge distance to bottom of flange	x2=42.9 mm
Edge distance to shear bolts	e1'=100 mm
Bolt cross-centres	p3=100 mm
Width of end plate	bp=260 mm
Assumed web fillet weld size	sww=8 mm
Assumed flange fillet weld size	swf=12 mm

SUMMARY OF BOLT POTENTIAL RESISTANCES

Top row of bolts	Pr1=406.66 kN
Row 2	Pr2=347.13 kN
Row 3	Pr3=287.6 kN
Row 4	Pr4=228.07 kN
Row 5	Pr5=168.54 kN
Row 6	Pr6=109.01 kN
Resistance of beam flange	FcRd=1520 kN

Beam tension flange welds

Weld design strength	fvwd=fu/SQR(3)/(betaw*gamM2) =222.79 N/mm²
Weld size required	swfr=FwEdf*10^3/(0.7*fvwd)=9.7783 mm
Selected fillet weld size	swt=10 mm

Beam web welds

Tension zone - a full strength weld is recommended in the web tension zone with the sum of the throat thicknesses ≥ the web thickness, twb.

Selected fillet weld size	sfw=10 mm
Length of web weld	Lwt=(ex-x-tfb-rb)+(trow-1)*p1+1.73 *p3/2=560.1 mm

Shear zone - assume an 10 mm FW continued for the full depth.

Length of weld for shear	Lws=hb-2*(tfb+rb)-Lwt=55 mm
Resistance of weld for shear	FwRds=2*0.7*sfw*fvwd*Lws/10^3 =171.55 kN
Vertical shear	VEd=60 kN

An 10 mm fillet weld size is therefore considered suitable.

Compression welds

Assuming a bearing fit between the flange and end plate, the use of an 8 mm fillet weld will suffice for the beam compression flange.

CONNECTION SUMMARY - all dimensions in diagram are in mm

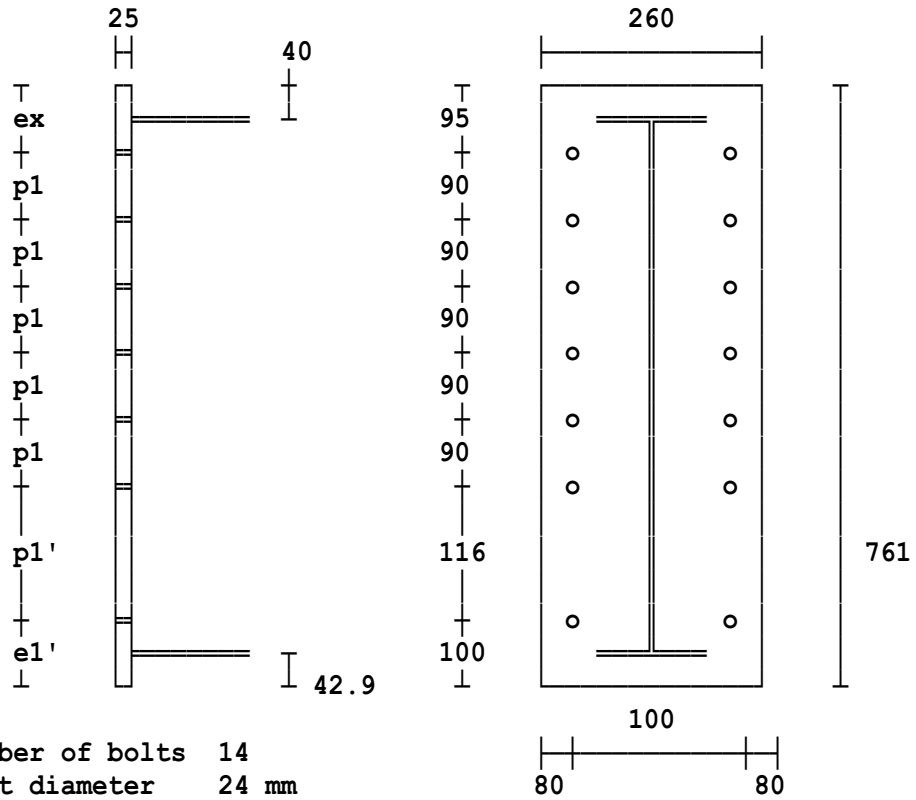

Number of bolts	**14**	
Bolt diameter	**24 mm**	
Bolt grade	**8.8**	
Welds	**Tension flange fillet weld**	**10 mm**
	Web fillet weld	**10 mm**
	Compression flange fillet weld	**8 mm**
Beam / Rafter section	**686 x 254 x 125 UKB**	

Location: Ex3 - Reversible moment (with total of 8No bolts)

Flush beam splice

Calculations are in accordance with EC3 Parts 1-1, 1-5, 1-8 and follow the procedure given in the SCI publication P398 entitled 'Joints in Steel Construction Moment-Resisting Joints to Eurocode 3'.

Bolted end plate beam splice two-way (reversible moment)

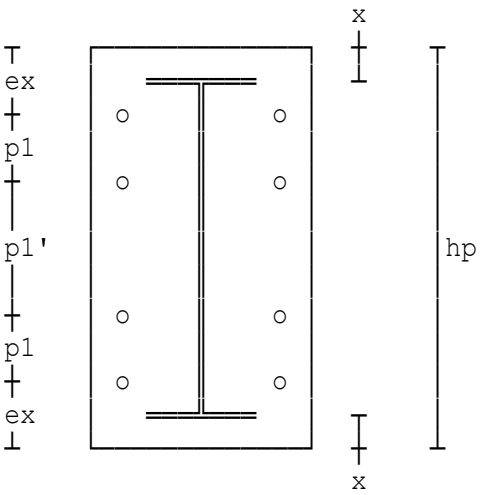

Design assumptions:
- the bolt arrangement is symmetrical about the centre line (y-y axis) of the beam
- moment is reversible
- moment is carried by half of the bolts
- shear is carried by the other half of the bolts
- the connection consists of two identical beam & end plate arrangements.

Factored moment	MyEd=280 kNm
Factored shear force	VEd=238 kN
Axial force (+ve compression)	NEd=0 kN

Supported beam details

533 x 210 x 92 UKB

Bolt details

Diameter of bolts	db=24 mm
Tensile resistance (EC3 Part 1-8)	FtRd=k2*fub*At/(gamM2*10^3)=203.33 kN

End plate details

Thickness of plate	tp=25 mm
Total number of bolts	bn=8
Distance to first row of bolts	ex=90 mm
Edge distance	x=36 mm
Pitch of tension bolts	p1=90 mm
Bolt cross-centres	p3=140 mm
Width of end plate	bp=220 mm
Assumed web fillet weld size	sww=8 mm
Assumed flange fillet weld size	swf=12 mm

SUMMARY OF BOLT POTENTIAL RESISTANCES

Top row of bolts	Pr1=403.87 kN
Row 2	Pr2=263.34 kN
Resistance of beam flange	FcRd=1257 kN

Beam tension flange welds

Weld design strength	fvwd=fu/SQR(3)/(betaw*gamM2) =222.79 N/mm²
Weld size required	swfr=FwEdf*10^3/(0.7*fvwd)=10.473 mm
Selected fillet weld size	swt=12 mm

Beam web welds

Tension zone - a full strength weld is recommended in the web tension zone with the sum of the throat thicknesses ≥ the web thickness, twb.

Selected fillet weld size	sfw=8 mm
Length of web weld	Lwt=(ex-x-tfb-rb)+(trow-1)*p1+1.73 *p3/2=236.8 mm

Shear zone - assume an 8 mm FW continued for the full depth.

Length of weld for shear	Lws=hb-2*(tfb+rb)-Lwt=239.7 mm
Resistance of weld for shear	FwRds=2*0.7*sfw*fvwd*Lws/10^3 =598.11 kN
Vertical shear	VEd=238 kN

An 8 mm fillet weld size is therefore considered suitable.

Compression welds

As moment is reversible tension and compression surfaces are interchangeable, welding must be the same for both flanges.

CONNECTION SUMMARY - all dimensions in diagram are in mm

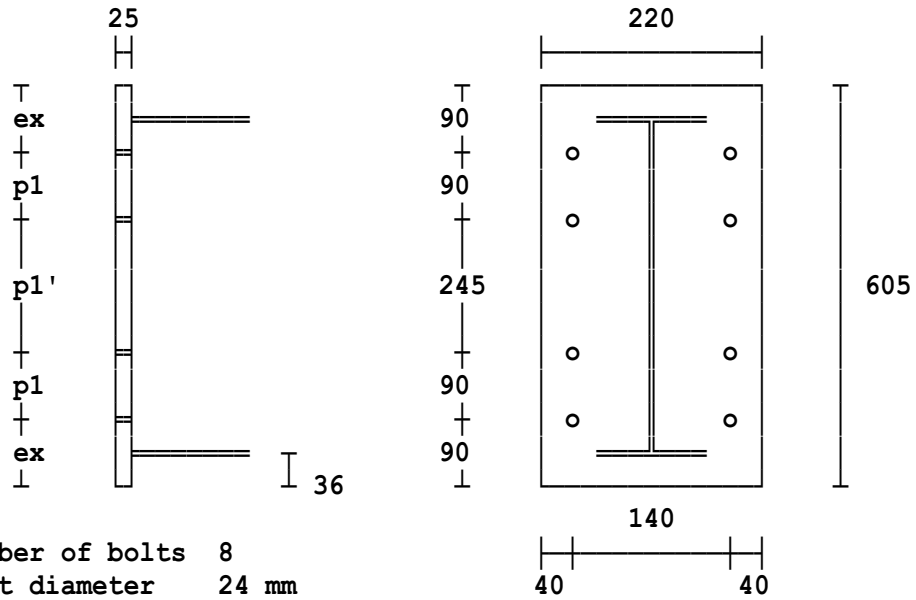

Number of bolts	**8**	
Bolt diameter	**24 mm**	
Bolt grade	**8.8**	
Welds	**Tension flange fillet weld**	**12 mm**
	Web fillet weld	**8 mm**
	Compression flange fillet weld	**12 mm**
Beam / Rafter section	**533 x 210 x 92 UKB**	

Location: Ex4 - Minimum size (with a total of 4No bolts)

Flush beam splice

Calculations are in accordance with EC3 Parts 1-1, 1-5, 1-8 and follow the procedure given in the SCI publication P398 entitled 'Joints in Steel Construction Moment-Resisting Joints to Eurocode 3'.

Bolted end plate beam splice two-way (reversible moment)

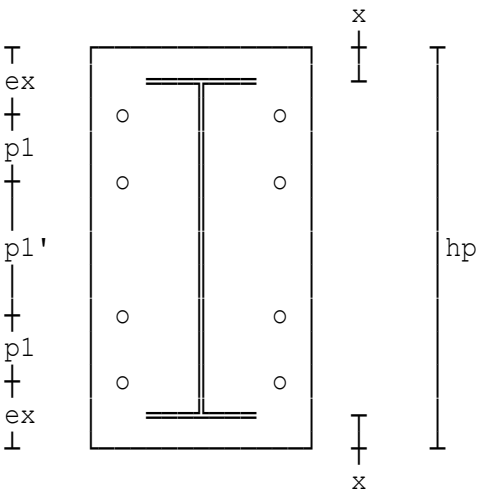

Design assumptions:
- the bolt arrangement is symmetrical about the centre line (y-y axis) of the beam
- moment is reversible
- moment is carried by half of the bolts
- shear is carried by the other half of the bolts
- the connection consists of two identical beam & end plate arrangements.

Factored moment	MyEd=33 kNm
Factored shear force	VEd=129 kN
Axial force (+ve compression)	NEd=0 kN

Supported beam details

178 x 102 x 19 UKB

Bolt details

Diameter of bolts	db=24 mm
Tensile resistance (EC3 Part 1-8)	FtRd=k2*fub*At/(gamM2*10^3)=203.33 kN

End plate details

Thickness of plate	tp=25 mm
Total number of bolts	bn=4
Distance to first row of bolts	ex=80 mm
Edge distance	x=30 mm
Bolt cross-centres	p3=60 mm
Width of end plate	bp=125 mm
Assumed web fillet weld size	sww=8 mm
Assumed flange fillet weld size	swf=8 mm

SUMMARY OF BOLT POTENTIAL RESISTANCES

Top row of bolts	Pr1=406.66 kN
Resistance of beam flange	FcRd=308 kN

Beam tension flange welds

Weld design strength	fvwd=fu/SQR(3)/(betaw*gamM2) =222.79 N/mm²
Weld size required	swfr=FwEdf*10^3/(0.7*fvwd)=7.1345 mm
Selected fillet weld size	swt=8 mm

Beam web welds

Tension zone - a full strength weld is recommended in the web tension zone with the sum of the throat thicknesses ≥ the web thickness, twb.

Selected fillet weld size	sfw=8 mm
Length of web weld	Lwt=(ex-x-tfb-rb)+1.73*p3/2=86.4 mm

Shear zone - assume an 8 mm FW continued for the full depth.

Length of weld for shear	Lws=hb-2*(tfb+rb)-Lwt=60.4 mm
Resistance of weld for shear	FwRds=2*0.7*sfw*fvwd*Lws/10^3 =150.71 kN
Vertical shear	VEd=129 kN

An 8 mm fillet weld size is therefore considered suitable.

Compression welds

As moment is reversible tension and compression surfaces are interchangeable, welding must be the same for both flanges.

CONNECTION SUMMARY - all dimensions in diagram are in mm

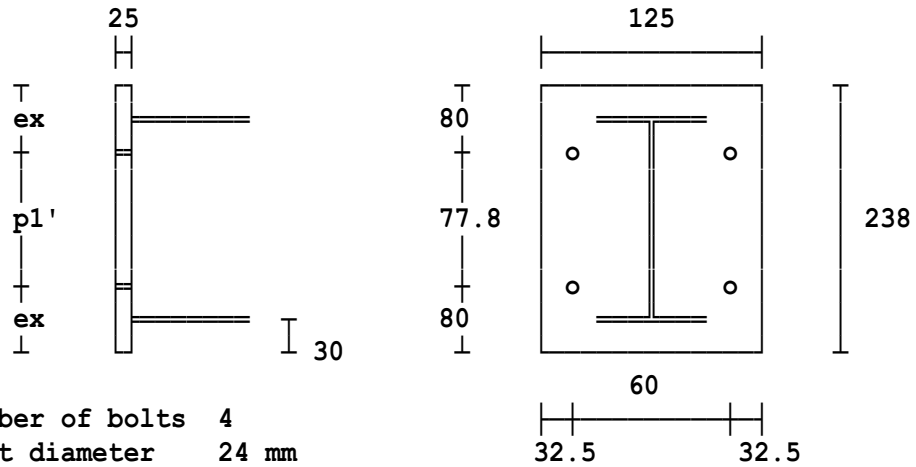

Number of bolts	**4**	
Bolt diameter	**24 mm**	
Bolt grade	**8.8**	
Welds	**Tension flange fillet weld**	**8 mm**
	Web fillet weld	**8 mm**
	Compression flange fillet weld	**8 mm**
Beam / Rafter section	**178 x 102 x 19 UKB**	

Location: Ex1 - Example from Moment Connections publication

Welded beam to column connection

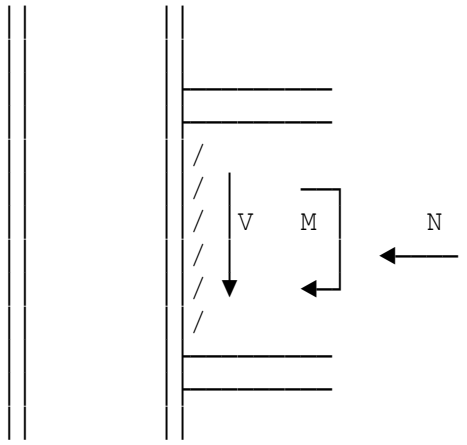

Calculations are in accordance with BS5950-1:2000.
The analysis follows the recommended design procedure checks given in the BCSA/BSI publication entitled 'Joints in Steel Construction - Moment Connections'.

The connection is attached to the column flange.

There is only one connection.

Factored moment	M=170 kNm
Factored shear force	V=57 kN
Axial force (+ve compression)	N=0 kN

533 x 210 x 82 UB.
305 x 165 x 46 UB.

Connection of stiffeners to column web

For electrode grade 35

Design strength	pw=TABLE 37 for cgrade=275, Es=35 =220 N/mm²
Weld size	ss=6 mm

Adopt 2/80 mm x 15 mm plate stiffeners Grade S 275 on line with the beam compression flange connected by 4/6 mm fillet welds.

Tension stiffener welds

Flange:
Provide full strength welds to the flange based on the thickness of the beam flange.

Required weld size	sfw'=Tb/(2*0.7)=8.4286 mm
Selected weld size	sfw=10 mm

Web:
Assume the total force is transferred to the web via the welds.

Selected fillet weld size	stw=6 mm

Weld chosen is considered suitable.

CONNECTION SUMMARY

Beam details

Beam section	**305 x 165 x 46 UB**
Fin plate details	**80 x 6 x 220 long.** **2 / M 20 bolts in slotted holes** **HSFG Bolt General grade (8.8)** **to BS4395 Part 1. Nuts grade 10.**

Welds

	Tension and compression flange: **Full penetration butt weld 12 mm** **Web butt weld 7 mm**

Column details

Column section	**533 x 210 x 82 UB**
Compression stiffeners	**2/80 mm x 15 mm plate Grade S 275** **connected by 4/6 mm fillet welds.**
Tension stiffeners	**2/75 mm x 16 mm plate Grade S 275** **connected by 4/6 mm fillet welds** **to the web and 4/10 mm fillet welds** **to the flanges.**

Location: Ex2 -Example with fin plate and diagonal stiffeners

Welded beam to column connection

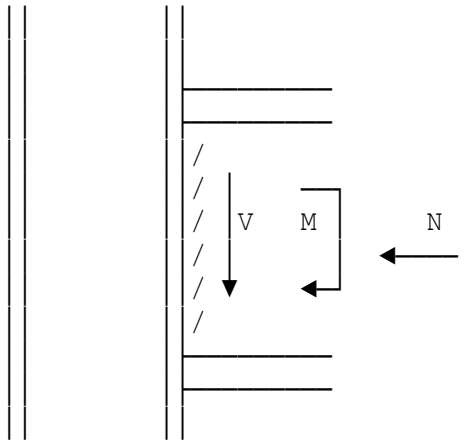

Calculations are in accordance with BS5950-1:2000.
The analysis follows the recommended design procedure checks given in the BCSA/BSI publication entitled 'Joints in Steel Construction - Moment Connections'.

The connection is attached to the column flange.

There is only one connection.

Factored moment	M=256 kNm
Factored shear force	V=184 kN
Axial force (+ve compression)	N=96 kN

254 x 254 x 89 UC.
457 x 191 x 82 UB.

Connection of stiffeners to column web

For electrode grade 35

Design strength	pw=TABLE 37 for cgrade=275, Es=35 =220 N/mm²
Weld size	ss=6 mm

Adopt 2/110 mm x 15 mm plate stiffeners Grade S 275 on line with the beam compression flange connected by 4/6 mm fillet welds.

Tension stiffener welds

Flange:
Provide full strength welds to the flange based on the thickness of the beam flange.

Required weld size	sfw'=Tb/(2*0.7)=11.429 mm
Selected weld size	sfw=14 mm

Web:
Assume the total force is transferred to the web via the welds.

Selected fillet weld size	stw=8 mm

Weld chosen is considered suitable.

Weld size	sc=6 mm

Adopt 2/110 mm x 15 mm diagonal stiffeners Grade S 275
on line between the beam tension and compression flanges
connected by 4/6 mm fillet welds.

Selected fillet weld size	swt=12 mm
Bolt diameter	db=20 mm
Thickness of fin plate	tfin=10 mm
Pitch of bolts vertically	p=70 mm
Vertical edge distance	e1=40 mm
Horizontal edge distance	e2=40 mm
Eccentricity of bolt group	af=60 mm
Supported beam end clearance	ec=20 mm
Slip factor for preloaded bolts	mu=0.5
Coefficient for type of hole	Ks=1
Weld leg length	s=8 mm
Selected fillet weld size	sfc=12 mm

CONNECTION SUMMARY

Beam details

Beam section	**457 x 191 x 82 UB**
Fin plate details	**100 x 10 x 290 long.** **4 / M 20 bolts in clearance holes** **8 mm fillet welding.** **HSFG Bolt General grade (8.8)** **to BS4395 Part 1. Nuts grade 10.**

Welds

	Tension flange F.W.	**12 mm**
	Compression flange F.W.	**12 mm**

Column details

Column section	**254 x 254 x 89 UC**
Compression stiffeners	**2/110 mm x 15 mm plate Grade S 275** **connected by 4/6 mm fillet welds.**
Tension stiffeners	**2/110 mm x 15 mm plate Grade S 275** **connected by 4/8 mm fillet welds** **to the web and 4/14 mm fillet welds** **to the flanges.**
Diagonal stiffeners	**2/110 mm x 15 mm Grade S 275** **connected by 4/6 mm fillet welds.**

Location: Ex3 - Shop welded stub

Welded beam to column connection

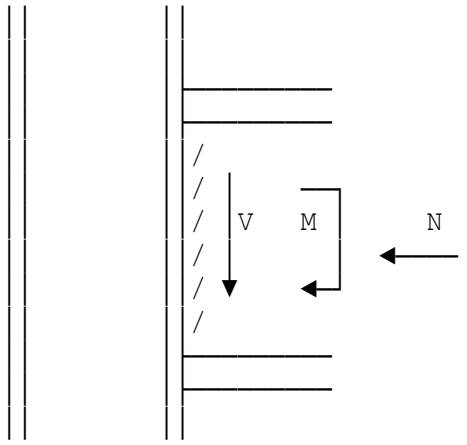

Calculations are in accordance with BS5950-1:2000.
The analysis follows the recommended design procedure checks given in the BCSA/BSI publication entitled 'Joints in Steel Construction - Moment Connections'.

The connection is attached to the column flange.

There is a similar beam on each column face.

Factored moment	M=383 kNm
Factored shear force	V=176 kN
Axial force (+ve compression)	N=-34 kN

254 x 254 x 107 UC.
533 x 210 x 109 UB.

Connection of stiffeners to column web

For electrode grade 35
Design strength pw=TABLE 37 for cgrade=275, Es=35
=220 N/mm²
Weld size ss=8 mm
Adopt 2/110 mm x 15 mm plate stiffeners Grade S 275 on line with the beam compression flange connected by 4/8 mm fillet welds.

Tension stiffener welds

Flange:
Provide full strength welds to the flange based on the thickness of the beam flange.
Required weld size sfw'=Tb/(2*0.7)=13.429 mm
Selected weld size sfw=14 mm

Web:
Assume the total force is transferred to the web via the welds.
Selected fillet weld size stw=8 mm
Weld chosen is considered suitable.

Selected fillet weld size swt=12 mm
Selected fillet weld size ww=9 mm

CONNECTION SUMMARY

Beam details - beam on either side of the stanchion

Beam section	**533 x 210 x 109 UB**	
Welds		
	Tension flange F.W.	**12 mm**
	Web fillet weld	**9 mm**
	Compression flange F.W.	**8 mm**

Column details

Column section	**254 x 254 x 107 UC**
Compression stiffeners	**2/110 mm x 15 mm plate Grade S 275 connected by 4/8 mm fillet welds.**
Tension stiffeners	**2/110 mm x 25 mm plate Grade S 275 connected by 4/8 mm fillet welds to the web and 4/14 mm fillet welds to the flanges.**

Location: Ex4 - High shear, grade 355 steel

Welded beam to column connection

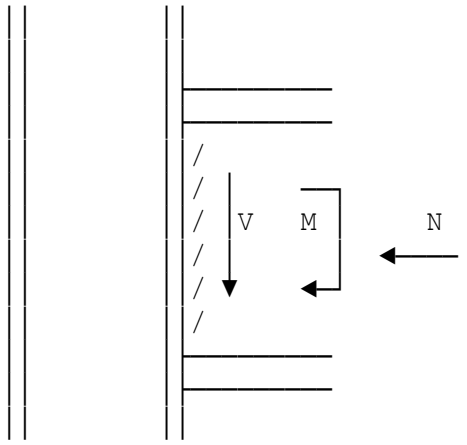

Calculations are in accordance with BS5950-1:2000.
The analysis follows the recommended design procedure checks given in the BCSA/BSI publication entitled 'Joints in Steel Construction - Moment Connections'.

The connection is attached to the column flange.

There is a similar beam on each column face.

Factored moment	M=569 kNm
Factored shear force	V=334 kN
Axial force (+ve compression)	N=189 kN

305 x 305 x 198 UC.
610 x 229 x 113 UB.

Bolt diameter	db=20 mm
Thickness of fin plate	tfin=10 mm
Pitch of bolts vertically	p=90 mm
Vertical edge distance	e1=40 mm
Horizontal edge distance	e2=40 mm
Eccentricity of bolt group	af=60 mm
Supported beam end clearance	ec=20 mm
Slip factor for preloaded bolts	mu=0.5
Coefficient for type of hole	Ks=1
Weld leg length	s=8 mm

CONNECTION SUMMARY

Beam details - beam on either side of the stanchion

Beam section	**610 x 229 x 113 UB**
Fin plate details	**100 x 10 x 440 long.**
	5 / M 20 bolts in clearance holes
	8 mm fillet welding.
	HSFG Bolt General grade (8.8)
	to BS4395 Part 1. Nuts grade 10.

Welds

Tension and compression flange:
Full penetration butt weld 18 mm

Column details

Column section	**305 x 305 x 198 UC**

Location: Ex1 - Example from Moment Connections publication

Welded beam to column connection

Calculations are in accordance with EC3 Parts 1-1, 1-5, 1-8 and follow the procedure given in the SCI publication entitled 'Joints in Steel Construction Moment Connections'.

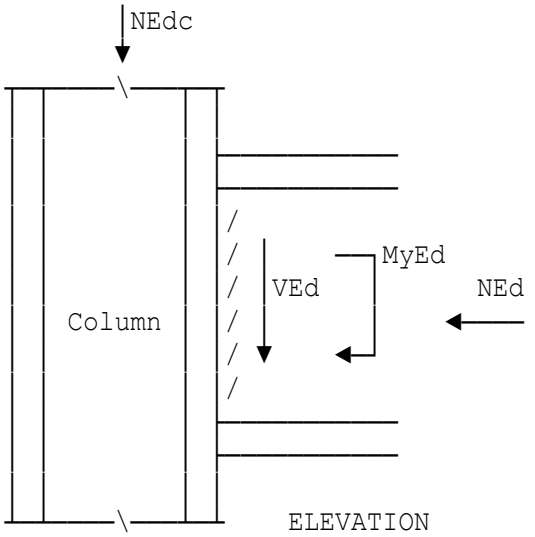

The connection is attached to the supporting column flange.

All loads and moments are factored.

One sided beam to column connection will be considered.

Design moment	MyEd=170 kNm
Design shear force	VEd=57 kN
Axial force (+ve compression)	NEd=0 kN

Supporting column details

533 x 210 x 82 UKB

Supported beam details

305 x 165 x 46 UKB

Column web in transverse compression - EC3 Part 1-8

Design axial load on column NEdc=500 kN

Connection of stiffeners to column web

Load on welds	FwEds=FEdCf*10^3/(Lw*10^3) =0.31347 kN/mm
Weld design shear strength	fvwd1=fu/SQR(3)/(betaw*gamM2) =222.79 N/mm²
Weld size	ss=6 mm

Adopt 2/80 mm x 15 mm plate stiffeners Grade S 275 on line with the beam compression flange connected by 4/6 mm fillet welds.

Column tension stiffener welds

Flange welds: Provide full strength welds to the flange based on the thickness of the beam flange.
Required weld size sfw'=tfb/(2*0.7)=8.4286 mm
Selected weld size sfw=10 mm
Web welds: Assume the force is transferred to the web via the welds.
Selected fillet weld size stw=6 mm
Weld chosen is considered suitable.

CONNECTION SUMMARY

Beam details

Beam section	**305 x 165 x 46 UKB**
Fin plate backing strip	**80 x 6 x 220 long. Provide 2 / M 20 grade 8.8 bolts in slotted holes for adjustment.**

Beam to column welds

	Tension & compression flange Full penetration butt weld 12 mm
	Web butt weld 7 mm

Column details

Column section	**533 x 210 x 82 UKB**
Compression stiffeners	**2/80 mm x 15 mm plate Grade S 275 connected by 4/6 mm fillet welds.**
Tension stiffeners	**2/75 mm x 16 mm plate Grade S 275 connected by 4/6 mm fillet welds to the web and 4/10 mm fillet welds to the flanges.**

Location: Ex2 -Example with fin plate and diagonal stiffeners

Welded beam to column connection

Calculations are in accordance with EC3 Parts 1-1, 1-5, 1-8 and follow the procedure given in the SCI publication entitled 'Joints in Steel Construction Moment Connections'.

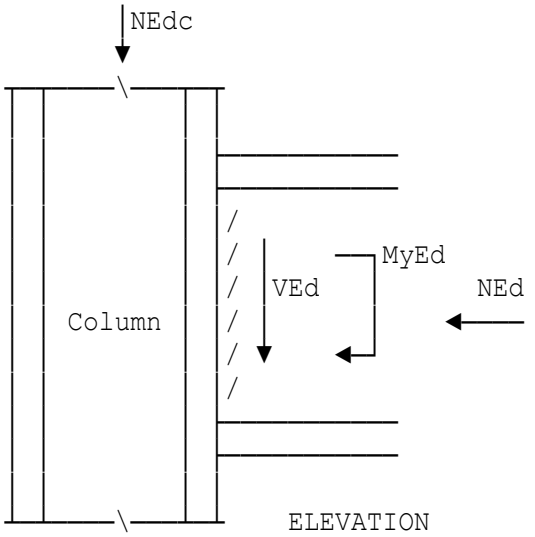

The connection is attached to the supporting column flange.

All loads and moments are factored.

One sided beam to column connection will be considered.

Design moment	MyEd=256 kNm
Design shear force	VEd=184 kN
Axial force (+ve compression)	NEd=96 kN

Supporting column details

254 x 254 x 89 UKC

Supported beam details

457 x 191 x 82 UKB

Column web in transverse compression - EC3 Part 1-8

Design axial load on column NEdc=500 kN

Connection of stiffeners to column web

Load on welds	FwEds=FEdCf*10^3/(Lw*10^3)=0.85 kN/mm
Weld design shear strength	fvwd1=fu/SQR(3)/(betaw*gamM2) =222.79 N/mm²
Weld size	ss=6 mm

Adopt 2/115 mm x 15 mm plate stiffeners Grade S 275 on line with the beam compression flange connected by 4/6 mm fillet welds.

Column tension stiffener welds

Flange welds: Provide full strength welds to the flange based on the thickness of the beam flange.
Required weld size sfw'=tfb/(2*0.7)=11.429 mm
Selected weld size sfw=14 mm
Web welds: Assume the force is transferred to the web via the welds.
Selected fillet weld size stw=8 mm
Weld chosen is considered suitable.
Weld size sc=6 mm
Adopt 2/115 mm x 15 mm diagonal stiffeners Grade S 275
on line between the beam tension and compression flanges
connected by 4/6 mm fillet welds.
Selected fillet weld size swt=12 mm
Selected fillet weld size ww=8 mm
Selected fillet weld size sfc=12 mm

CONNECTION SUMMARY

Beam details

Beam section	**457 x 191 x 82 UKB**

Beam to column welds

	Tension flange F.W.	**12 mm**
	Web fillet weld	**8 mm**
	Compression flange F.W.	**12 mm**

Column details

Column section	**254 x 254 x 89 UKC**
Compression stiffeners	**2/115 mm x 15 mm plate Grade S 275 connected by 4/6 mm fillet welds.**
Tension stiffeners	**2/115 mm x 15 mm plate Grade S 275 connected by 4/8 mm fillet welds to the web and 4/14 mm fillet welds to the flanges.**
Diagonal stiffeners	**2/115 mm x 15 mm Grade S 275 connected by 4/6 mm fillet welds.**

Location: Ex3 - Shop welded stub

Welded beam to column connection

Calculations are in accordance with EC3 Parts 1-1, 1-5, 1-8 and follow the procedure given in the SCI publication entitled 'Joints in Steel Construction Moment Connections'.

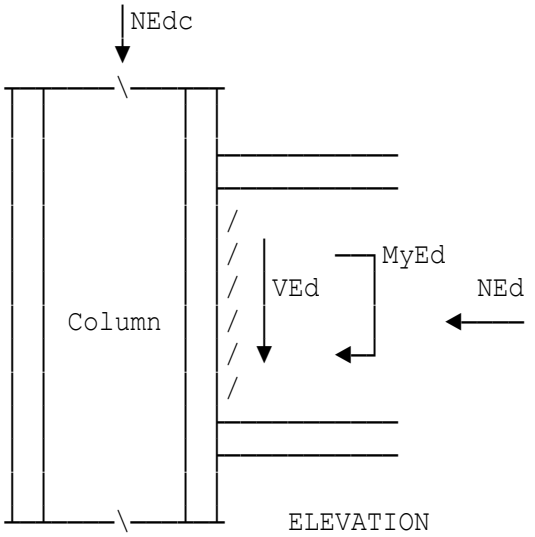

The connection is attached to the supporting column flange.

All loads and moments are factored.

There is a similar beam on each column face.

Design moment	MyEd=383 kNm
Design shear force	VEd=176 kN
Axial force (+ve compression)	NEd=-34 kN

Supporting column details

254 x 254 x 107 UKC

Supported beam details

533 x 210 x 109 UKB

Column web in transverse compression - EC3 Part 1-8

Design axial load on column NEdc=500 kN

Connection of stiffeners to column web

Load on welds	FwEds=FEdCf*10^3/(Lw*10^3)
	=0.97788 kN/mm
Weld design shear strength	fvwd1=fu/SQR(3)/(betaw*gamM2)
	=222.79 N/mm²
Weld size	ss=8 mm

Adopt 2/110 mm x 15 mm plate stiffeners Grade S 275 on line with the beam compression flange connected by 4/8 mm fillet welds.

Column tension stiffener welds

Flange welds: Provide full strength welds to the flange based on the thickness of the beam flange.
Required weld size sfw'=tfb/(2*0.7)=13.429 mm
Selected weld size sfw=14 mm
Web welds: Assume the force is transferred to the web via the welds.
Selected fillet weld size stw=8 mm
Weld chosen is considered suitable.
Selected fillet weld size swt=12 mm
Selected fillet weld size ww=9 mm
Selected fillet weld size sfc=8 mm

CONNECTION SUMMARY

Beam details - beam on either side of the stanchion

Beam section **533 x 210 x 109 UKB**

Beam to column welds

Tension flange F.W.	**12 mm**
Web fillet weld	**9 mm**
Compression flange F.W.	**8 mm**

Column details

Column section **254 x 254 x 107 UKC**
Compression stiffeners **2/110 mm x 15 mm plate Grade S 275 connected by 4/8 mm fillet welds.**
Tension stiffeners **2/110 mm x 25 mm plate Grade S 275 connected by 4/8 mm fillet welds to the web and 4/14 mm fillet welds to the flanges.**

Location: Ex4 - High shear, grade 355 steel

Welded beam to column connection

Calculations are in accordance with EC3 Parts 1-1, 1-5, 1-8 and follow the procedure given in the SCI publication entitled 'Joints in Steel Construction Moment Connections'.

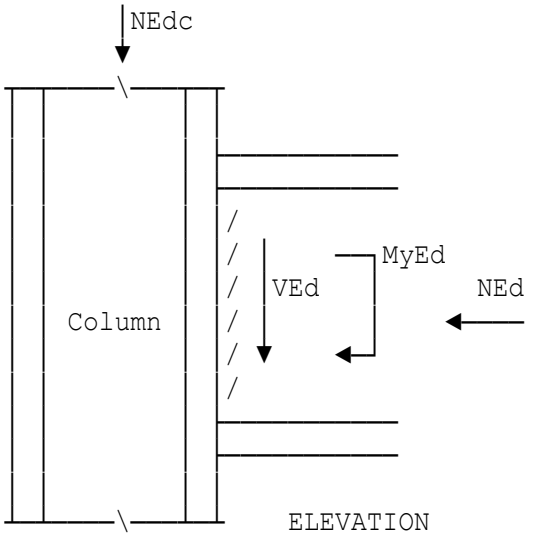

The connection is attached to the supporting column flange.

All loads and moments are factored.

There is a similar beam on each column face.

Design moment	MyEd=569 kNm
Design shear force	VEd=334 kN
Axial force (+ve compression)	NEd=189 kN

Supporting column details

305 x 305 x 198 UKC

Supported beam details

610 x 229 x 113 UKB

Column web in transverse compression - EC3 Part 1-8

Design axial load on column	NEdc=500 kN
Selected fillet weld size	ww=8 mm

CONNECTION SUMMARY

Beam details - beam on either side of the stanchion

Beam section	**610 x 229 x 113 UKB**

Beam to column welds

	Tension & compression flange
	Full penetration butt weld 18 mm
	Web fillet weld 8 mm

Column details

Column section	**305 x 305 x 198 UKC**

Location: Ex5 - No column stiffeners (Lawrence Martin book Ex7.7)

Welded beam to column connection

Calculations are in accordance with EC3 Parts 1-1, 1-5, 1-8 and follow the procedure given in the SCI publication entitled 'Joints in Steel Construction Moment Connections'.

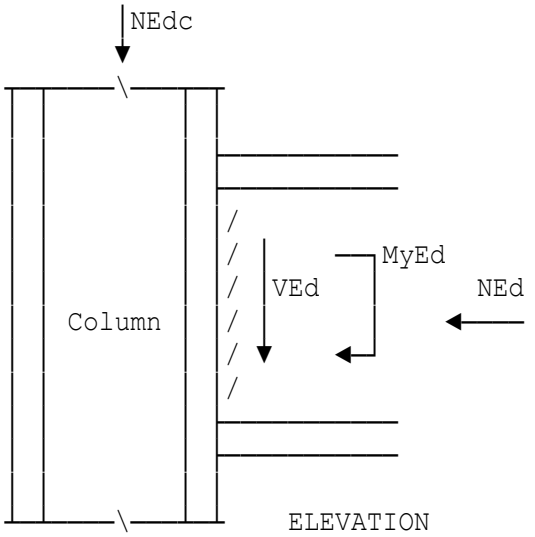

The connection is attached to the supporting column flange.

All loads and moments are factored.

One sided beam to column connection will be considered.

Design moment	MyEd=243 kNm
Design shear force	VEd=405 kN
Axial force (+ve compression)	NEd=0 kN

Supporting column details

305 x 305 x 198 UKC

Supported beam details

838 x 292 x 226 UKB

Column web in transverse compression - EC3 Part 1-8

Design axial load on column	NEdc=500 kN
Selected fillet weld size	swt=6 mm
Selected fillet weld size	ww=12 mm
Selected fillet weld size	sfc=6 mm

CONNECTION SUMMARY

Beam details

Beam section	**838 x 292 x 226 UKB**	

Beam to column welds

	Tension flange F.W.	**6 mm**
	Web fillet weld	**12 mm**
	Compression flange F.W.	**6 mm**

Column details

Column section	**305 x 305 x 198 UKC**	

Location: Ex1 - Based on Joints publication (outer plate)

Flush beam splice with end plates and single flange plate

Calculations are in accordance with BS5950-1:2000 and follow the procedure given in the SCI publication entitled 'Joints in Steel Construction Moment Connections'.

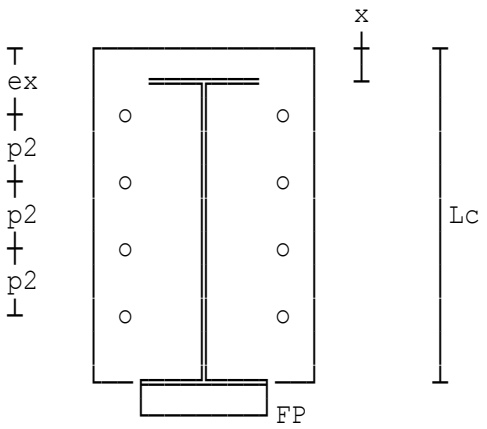

Design assumptions

- all end plate bolts are subject to tension
- shear is evenly distributed between the bolts in the end plate arrangement
- the connection consists of two identical beam and end plate arrangements
- moment is not reversible
- flange plate (FP) on the compression surface.

Factored moment	M=405 kNm
Factored shear force	V=60 kN
Axial force (+ve compression)	N=0 kN

Beam details

533 x 210 x 92 UB.

Bolt details

Diameter of bolts	bd=24 mm
Tensile capacity	Pt'=pt*At/10^3=197.68 kN

End plate details

Thickness of plate	tp=25 mm
Number of tension bolts	bn=8
Distance to first row of bolts	ex=75 mm
Distance to beam flange	x=15 mm
Pitch of tension bolts	p2=90 mm
Bolt cross-centres	g=100 mm
Width of end plate	bp=250 mm
Assumed web fillet weld size	sww=8 mm
Assumed flange fillet weld size	swf=12 mm

SUMMARY OF BOLT POTENTIAL RESISTANCES

Top row of bolts	Pr1=395.36 kN
Row 2	Pr2=318.89 kN
Row 3	Pr3=242.42 kN
Row 4	Pr4=165.94 kN

Beam tension flange welds

Selected fillet weld size	swt=12 mm

Beam web welds

Selected fillet weld size	sfw=8 mm
Vertical shear	V=60 kN

FLANGE SPLICE

Assumptions:
- the flange plate(s) resist a compressive force, Fcc
- the splice uses HSFG bolts to avoid producing bolt slip and consequent additional beam deflection.

Flange plate details

Thickness of flange plate	tcp=20 mm
Width of flange cover plate	Bfp=210 mm

Flange plate bolt details

Bolt diameter in flange plate	bdf=24 mm
Bolt spacing (across the beam)	crs=140 mm
Total no. of bolts in cover plate	np=16
Pitch of bolts (along the beam)	pit=70 mm
Spacing of bolts across beams	spac=150 mm
End distance in flange plate	end=50 mm
Edge distance	ed=(Bfp-crs)/2=35 mm
Projection of flange cover plate	P=(np/4-1)*pit+spac/2+end=335 mm
Length of flange cover plate	Dfp=2*P=670 mm

Slip resistance of one fastener

Slip factor for preloaded bolts	mu=0.5
Coefficient for type of hole	Ks=1
Proof load (BS4395)	Po=207 kN
Slip resistance	PsL=1.1*Ks*mu*Po=113.85 kN

CONNECTION SUMMARY - all dimensions in diagram are in mm

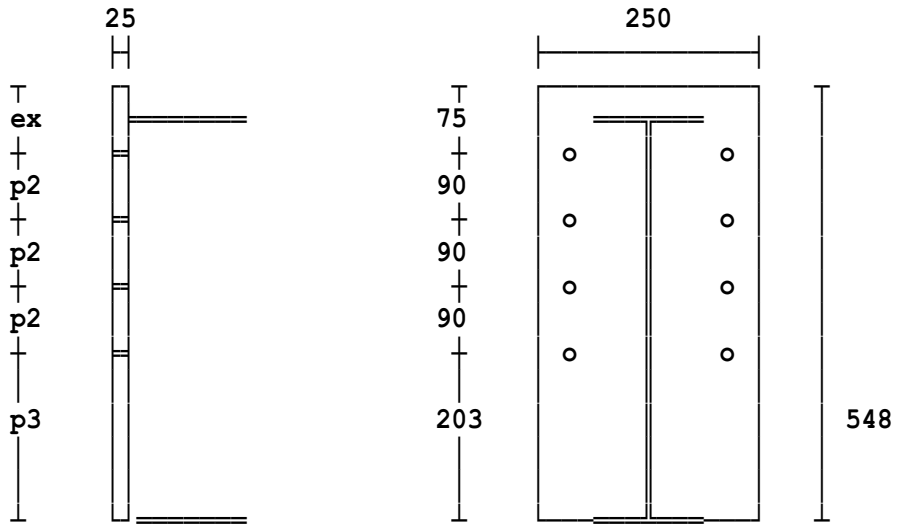

NOTE: Bottom flange cover plate omitted for clarity.

Bolt grade	**8.8**	
Welds	**Tension flange fillet weld**	**12 mm**
	Web fillet weld	**8 mm**
	Compression flange fillet weld	**8 mm**
Beam / Rafter section	**533 x 210 x 92 UB**	

FLANGE COVER PLATE SUMMARY - all dimensions in diagram are in mm

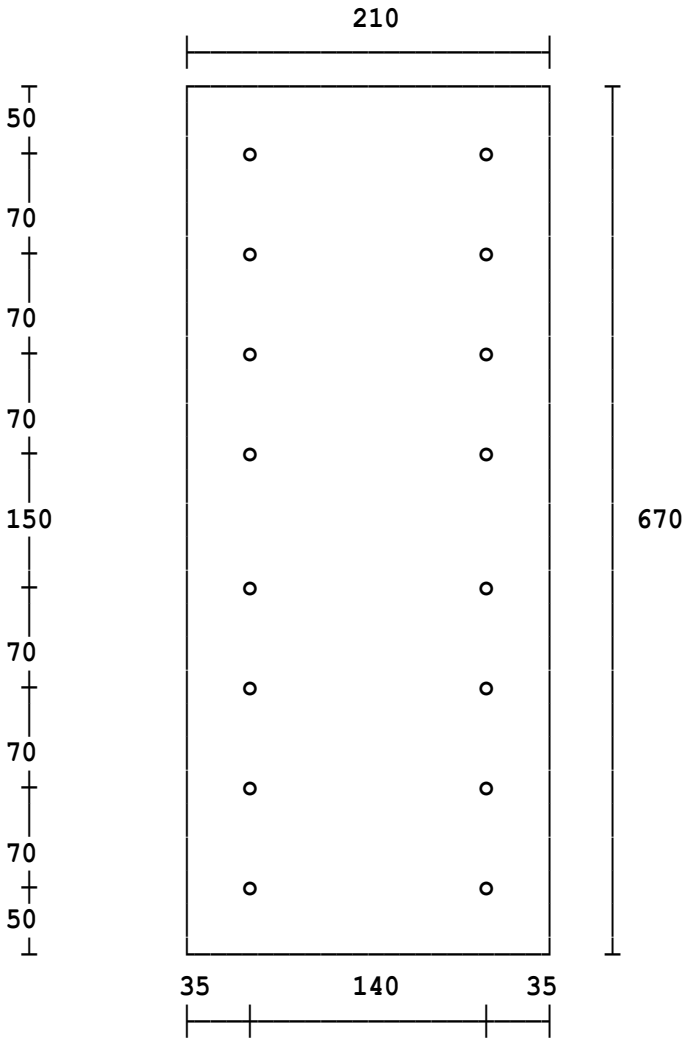

Flange cover plate	**210 mm x 20 mm x 670 mm**
Number of bolts	**16**
Bolt diameter	**24 mm**
Bolt grade	**HSFG**
	General grade (8.8) to BS4395 Part 1
Nut grade	**10**

Location: Ex2 - Double plates using 8.8 bolts

Flush beam splice with end plates and single flange plate

Calculations are in accordance with BS5950-1:2000 and follow the procedure given in the SCI publication entitled 'Joints in Steel Construction Moment Connections'.

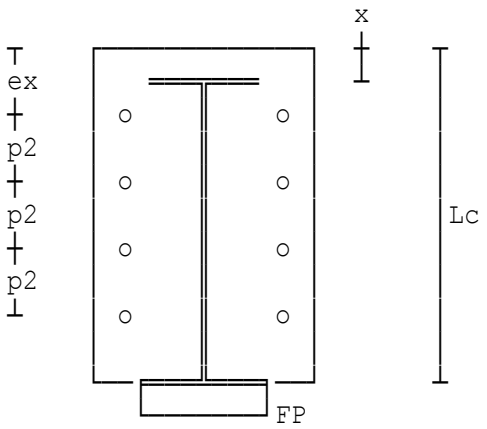

Design assumptions

- all end plate bolts are subject to tension
- shear is evenly distributed between the bolts in the end plate arrangement
- the connection consists of two identical beam and end plate arrangements
- moment is not reversible
- flange plate (FP) on the compression surface.

Factored moment	M=380 kNm
Factored shear force	V=60 kN
Axial force (+ve compression)	N=0 kN

Beam details

533 x 210 x 92 UB.

Bolt details

Diameter of bolts	bd=24 mm
Tensile capacity	Pt'=pt*At/10^3=197.68 kN

End plate details

Thickness of plate	tp=25 mm
Number of tension bolts	bn=8
Distance to first row of bolts	ex=75 mm
Distance to beam flange	x=15 mm
Pitch of tension bolts	p2=90 mm
Bolt cross-centres	g=100 mm
Width of end plate	bp=250 mm
Assumed web fillet weld size	sww=8 mm
Assumed flange fillet weld size	swf=12 mm

SUMMARY OF BOLT POTENTIAL RESISTANCES

Top row of bolts	Pr1=395.36 kN
Row 2	Pr2=318.89 kN
Row 3	Pr3=242.42 kN
Row 4	Pr4=165.94 kN

Beam tension flange welds

Selected fillet weld size	swt=12 mm

Beam web welds

Selected fillet weld size	sfw=8 mm
Vertical shear	V=60 kN

FLANGE SPLICE

Assumptions:
- the flange plate(s) resist a compressive force, Fcc
- the splice uses HSFG bolts to avoid producing bolt slip and consequent additional beam deflection.

Flange plate details

Thickness of flange plate	tcp=15 mm
Width of flange cover plate	Bfp=210 mm

Flange plate bolt details

Bolt spacing (across the beam)	crs=140 mm
Total no. of bolts in cover plate	np=20
Pitch of bolts (along the beam)	pit=70 mm
Spacing of bolts across beams	spac=150 mm
End distance in flange plate	end=50 mm
Edge distance	ed=(Bfp-crs)/2=35 mm
Projection of flange cover plate	P=(np/4-1)*pit+spac/2+end=405 mm
Length of flange cover plate	Dfp=2*P=810 mm

Slip resistance of one fastener

Slip factor for preloaded bolts	mu=0.5
Coefficient for type of hole	Ks=1
Proof load (BS4395)	Po=207 kN
Slip resistance	PsL=1.1*Ks*mu*Po=113.85 kN

CONNECTION SUMMARY - all dimensions in diagram are in mm

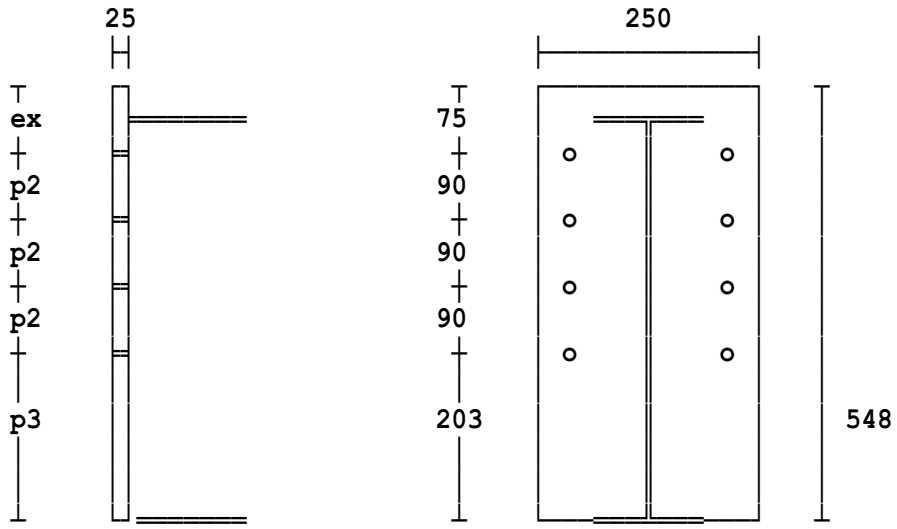

NOTE: Bottom flange cover plate omitted for clarity.

Bolt grade	**8.8**	
Welds	**Tension flange fillet weld**	**12 mm**
	Web fillet weld	**8 mm**
	Compression flange fillet weld	**8 mm**
Beam / Rafter section	**533 x 210 x 92 UB**	

FLANGE COVER PLATE SUMMARY - all dimensions in diagram are in mm

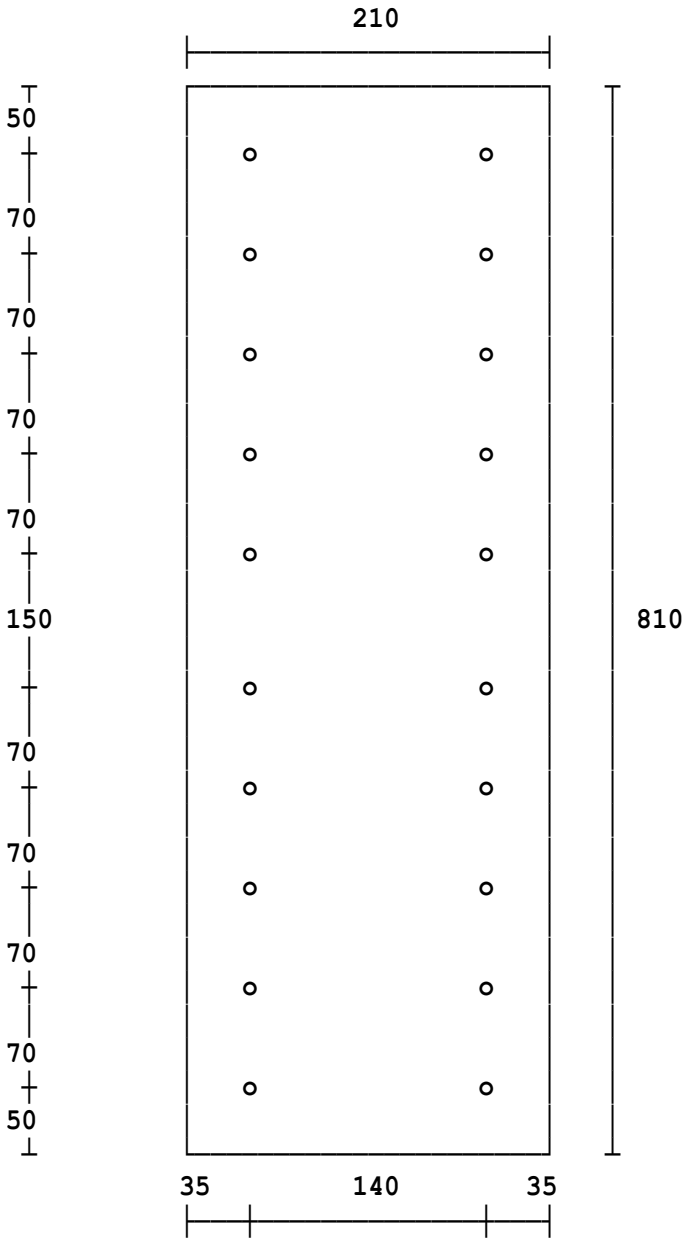

Flange cover plate	**210 mm x 15 mm x 810 mm**
Number of bolts	**20**
Bolt diameter	**24 mm**
Bolt grade	**HSFG**
	General grade (8.8) to BS4395 Part 1
Nut grade	**10**

Location: Ex3 - Splice in beam 1.5 m from wall

Flush beam splice with end plates and single flange plate

Calculations are in accordance with BS5950-1:2000 and follow the procedure given in the SCI publication entitled 'Joints in Steel Construction Moment Connections'.

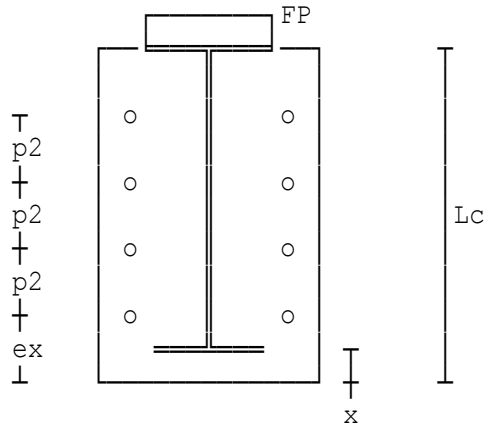

Design assumptions

- all end plate bolts are subject to shear
- the connection consists of two identical beam and end plate arrangements
- moment is not reversible
- flange plate (FP) on the tension surface.

Factored moment	M=30 kNm
Factored shear force	V=20 kN
Axial force (+ve compression)	N=0 kN

Beam details

152 x 152 x 37 UC.

End plate details

Diameter of bolts	bd=20 mm
Thickness of plate	tp=16 mm
Number of shear bolts	bn=4
Distance to first row of bolts	ex=72 mm
Distance to beam flange	x=16 mm
Pitch of remaining bolts	p2=50 mm
Bolt cross-centres	g=90 mm
Width of end plate	bp=156 mm
Assumed web fillet weld size	sww=8 mm
Assumed flange fillet weld size	swf=8 mm

Beam tension flange welds

Beam web welds

Full strength weld used
Selected fillet weld size sfw=8 mm

FLANGE SPLICE

Assumptions:

- the flange plate(s) resist a tensile force, Ft
- the splice uses HSFG bolts to avoid producing bolt slip and consequent additional beam deflection.

Flange plate details

Thickness of flange plate tcp=16 mm
Width of flange cover plate Bfp=154 mm

Flange plate bolt details

Bolt spacing (across the beam) crs=90 mm
Total no. of bolts in cover plate np=8
Pitch of bolts (along the beam) pit=50 mm
Spacing of bolts across beams spac=120 mm
End distance in flange plate end=75 mm
Edge distance ed=(Bfp-crs)/2=32 mm
Projection of flange cover plate P=(np/4-1)*pit+spac/2+end=185 mm
Length of flange cover plate Dfp=2*P=370 mm

Slip resistance of one fastener

Slip factor for preloaded bolts mu=0.4
Coefficient for type of hole Ks=1
Proof load (BS4395) Po=144 kN
Slip resistance PsL=1.1*Ks*mu*Po=63.36 kN

CONNECTION SUMMARY - all dimensions in diagram are in mm

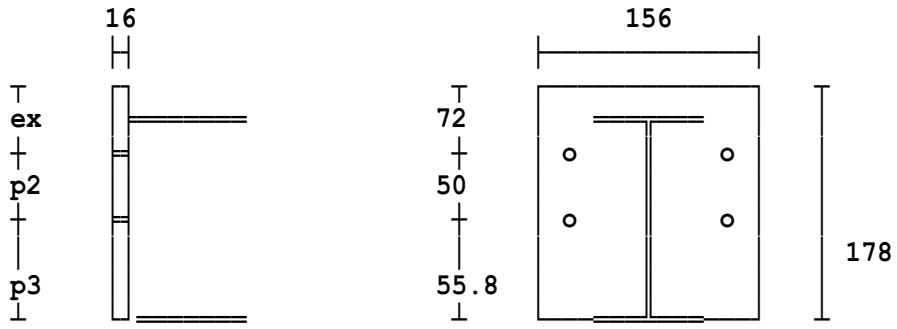

NOTE: Bottom flange cover plate omitted for clarity.

Bolt grade	**8.8**	
Welds	**Tension flange fillet weld**	**8 mm**
	Web fillet weld	**8 mm**
	Compression flange fillet weld	**8 mm**
Beam / Rafter section	**152 x 152 x 37 UC**	

FLANGE COVER PLATE SUMMARY - all dimensions in diagram are in mm

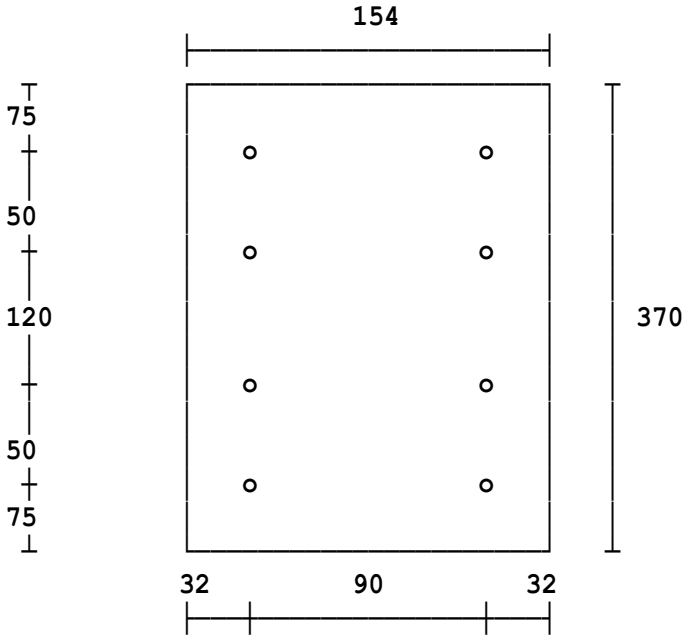

Flange cover plate	**154 mm x 16 mm x 370 mm**
Number of bolts	**8**
Bolt diameter	**20 mm**
Bolt grade	**HSFG**
	General grade (8.8) to BS4395 Part 1
Nut grade	**10**

Location: Ex4 - As example 3 with double plates

Flush beam splice with end plates and single flange plate

Calculations are in accordance with BS5950-1:2000 and follow the procedure given in the SCI publication entitled 'Joints in Steel Construction Moment Connections'.

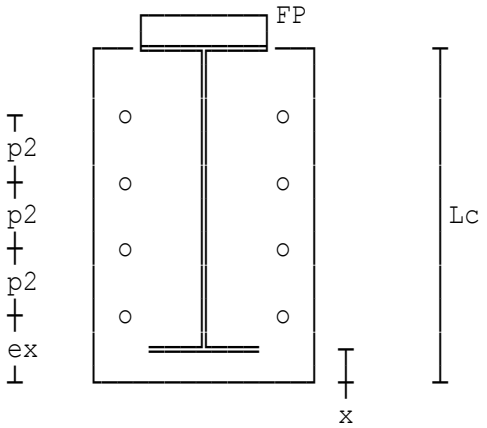

Design assumptions

- all end plate bolts are subject to shear
- the connection consists of two identical beam and end plate arrangements
- moment is not reversible
- flange plate (FP) on the tension surface.

Factored moment	M=30 kNm
Factored shear force	V=20 kN
Axial force (+ve compression)	N=0 kN

Beam details

152 x 152 x 37 UC.

End plate details

Diameter of bolts	bd=20 mm
Thickness of plate	tp=16 mm
Number of shear bolts	bn=4
Distance to first row of bolts	ex=72 mm
Distance to beam flange	x=16 mm
Pitch of remaining bolts	p2=50 mm
Bolt cross-centres	g=90 mm
Width of end plate	bp=156 mm
Assumed web fillet weld size	sww=8 mm
Assumed flange fillet weld size	swf=8 mm

Beam tension flange welds

Beam web welds

Selected fillet weld size	sfw=6 mm
Capacity of weld for shear	Psw=2*0.7*sfw*pw*Lws/10^3=228.41 kN
Vertical shear	V=20 kN

FLANGE SPLICE

Assumptions:

- the flange plate(s) resist a tensile force, Ft
- the splice uses HSFG bolts to avoid producing bolt slip and consequent additional beam deflection.

Flange plate details

Thickness of flange plate	tcp=16 mm
Width of flange cover plate	Bfp=154 mm

Flange plate bolt details

Bolt spacing (across the beam)	crs=90 mm
Total no. of bolts in cover plate	np=8
Pitch of bolts (along the beam)	pit=50 mm
Spacing of bolts across beams	spac=120 mm
End distance in flange plate	end=75 mm
Edge distance	ed=(Bfp-crs)/2=32 mm
Projection of flange cover plate	P=(np/4-1)*pit+spac/2+end=185 mm
Length of flange cover plate	Dfp=2*P=370 mm

Slip resistance of one fastener

Slip factor for preloaded bolts	mu=0.4
Coefficient for type of hole	Ks=1
Proof load (BS4395)	Po=144 kN
Slip resistance	PsL=1.1*Ks*mu*Po=63.36 kN

CONNECTION SUMMARY - all dimensions in diagram are in mm

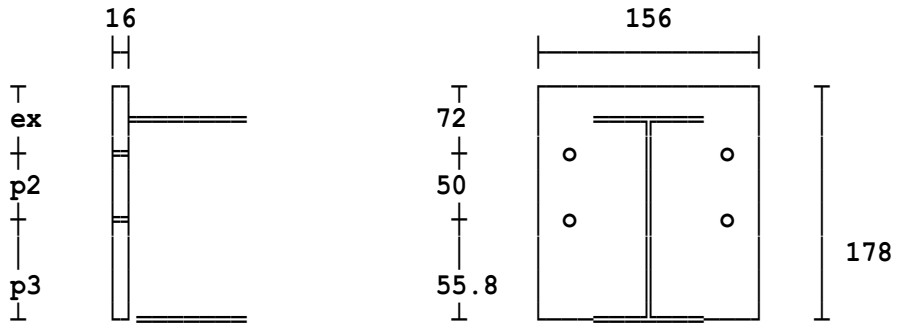

NOTE: Bottom flange cover plate omitted for clarity.

Bolt grade	**8.8**	
Welds	**Tension flange fillet weld**	**8 mm**
	Web fillet weld	**6 mm**
	Compression flange fillet weld	**8 mm**
Beam / Rafter section	**152 x 152 x 37 UC**	

FLANGE COVER PLATE SUMMARY - all dimensions in diagram are in mm

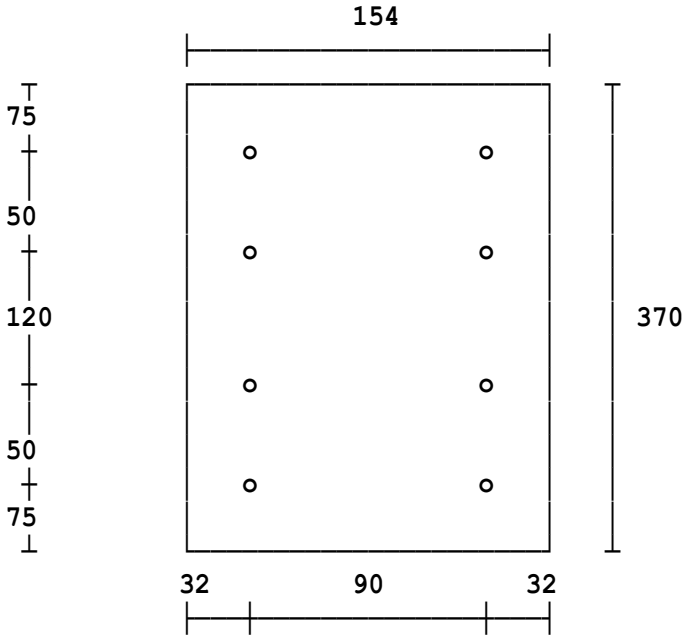

Flange cover plate	**154 mm x 16 mm x 370 mm**
Number of bolts	**8**
Bolt diameter	**20 mm**
Bolt grade	**HSFG**
	General grade (8.8) to BS4395 Part 1
Nut grade	**10**

Location: Ex1 - Based on Joints publication (outer plate)

Flush beam splice with end plates and single flange plate

Calculations are in accordance with EC3 Parts 1-1, 1-5, 1-8 and follow the procedure given in the SCI publication P398 entitled 'Joints in Steel Construction Moment-Resisting Joints to Eurocode 3'.

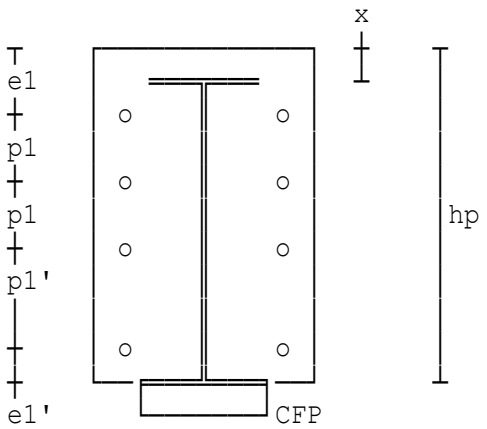

Design assumptions

- all bolts are in tension with the exception of the bottom two which will resist all the applied shear force
- the connection consists of two identical beam and end plate arrangements
- moment is not reversible
- compression flange plate (CFP) as shown in diagram.

Factored moment	MyEd=405 kNm
Factored shear force	VEd=60 kN
Axial force (+ve compression)	NEd=0 kN

Beam details

533 x 210 x 92 UKB

Bolt details

Diameter of bolts	db=24 mm
Tensile resistance (EC3 Part 1-8)	FtRd=k2*fub*At/(gamM2*10^3)=203.33 kN

End plate details

Thickness of plate	tp=25 mm
Number of bolts (in tension)	bn=8
Distance to first row of bolts	e1=75 mm
Distance to beam flange	x=15 mm
Pitch of tension bolts	p1=90 mm
End distance to shear bolts	e1'=100 mm
Bolt cross-centres	p3=100 mm
Width of end plate	bp=250 mm
Assumed web fillet weld size	sww=8 mm
Assumed flange fillet weld size	swf=12 mm

SUMMARY OF BOLT POTENTIAL RESISTANCES

Top row of bolts	Pr1=406.66 kN
Row 2	Pr2=328 kN
Row 3	Pr3=249.34 kN
Row 4	Pr4=170.69 kN

Beam tension flange welds

Selected fillet weld size	swt=12 mm

Beam web welds

Selected fillet weld size	sfw=8 mm
Resistance of weld for shear	FwRds=2*0.7*sfw*fvwd*Lws/10^3 =220.33 kN
Vertical shear	VEd=60 kN

FLANGE SPLICE

Assumptions:
- the flange plate(s) resist a compressive force, FcEdp
- the splice uses preloaded HSFG bolts to avoid producing bolt slip and consequent additional beam deflection.

Flange cover plate details

Thickness of flange cover plate	tfp=20 mm
Width of flange cover plate	bfp=210 mm

Flange cover plate bolt details

Bolt diameter in flange plate	dbfp=24 mm
Bolt cross-centres	p3fp=140 mm
Total no. of bolts in cover plate	np=16
Pitch of bolts (along the beam)	p1fp=70 mm
Spacing of bolts across beams	spac=150 mm
End distance in flange plate	e1fp=50 mm
Edge distance at cross centres	e2fp=(bfp-p3fp)/2=35 mm
Projection of flange cover plate	P=(np/4-1)*p1fp+spac/2+e1fp=335 mm
Length of flange cover plate	hfp=2*P=670 mm

Slip resistance of one fastener - EC3 Part 1-8

Slip resistance	FsRd=ks*n*mu*Fpc/1.25=98.84 kN

CONNECTION SUMMARY - all dimensions in diagram are in mm

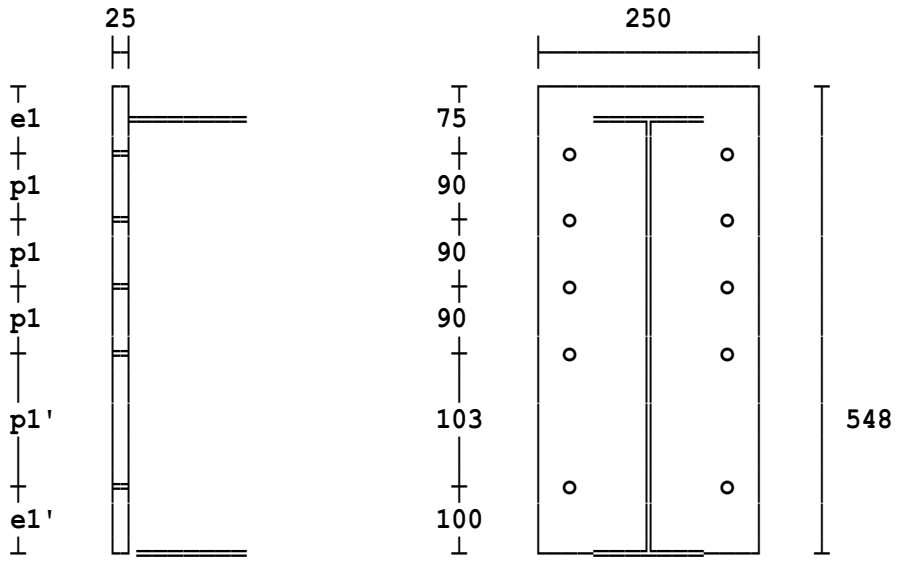

NOTE: Bottom flange cover plate omitted for clarity.

Bolt grade	**8.8**	
Bolt diameter	**24 mm**	
Welds	**Tension flange fillet weld**	**12 mm**
	Web fillet weld	**8 mm**
	Compression flange fillet weld	**8 mm**
Beam / Rafter section	**533 x 210 x 92 UKB**	

FLANGE COVER PLATE SUMMARY - all dimensions in diagram are in mm

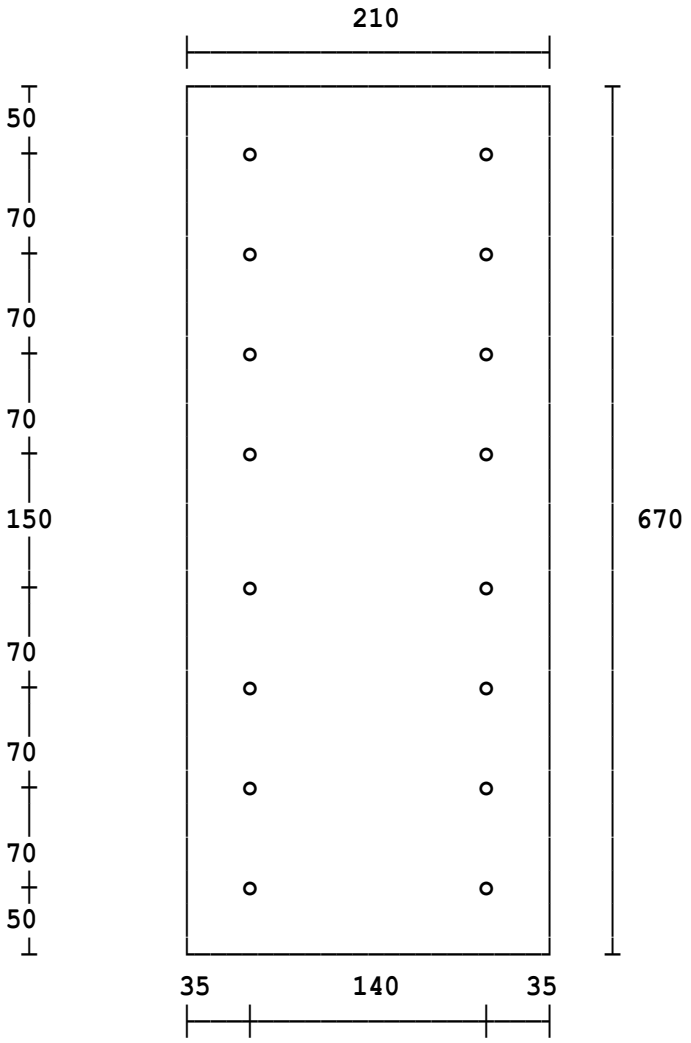

Flange cover plate	**210 mm x 20 mm x 670 mm**
Number of bolts	**16**
Bolt diameter	**24 mm**
Bolt grade	**Preloaded (HSFG), higher grade (10.9) with grade 12 nuts.**

Location: Ex2 - Double plates using 8.8 bolts

Flush beam splice with end plates and single flange plate

Calculations are in accordance with EC3 Parts 1-1, 1-5, 1-8 and follow the procedure given in the SCI publication P398 entitled 'Joints in Steel Construction Moment-Resisting Joints to Eurocode 3'.

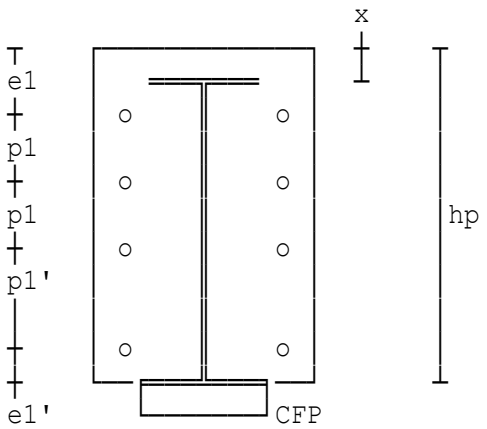

Design assumptions

- all bolts are in tension with the exception of the bottom two which will resist all the applied shear force
- the connection consists of two identical beam and end plate arrangements
- moment is not reversible
- compression flange plate (CFP) as shown in diagram.

Factored moment	MyEd=380 kNm
Factored shear force	VEd=60 kN
Axial force (+ve compression)	NEd=0 kN

Beam details

533 x 210 x 92 UKB

Bolt details

Diameter of bolts	db=24 mm
Tensile resistance (EC3 Part 1-8)	FtRd=k2*fub*At/(gamM2*10^3)=203.33 kN

End plate details

Thickness of plate	tp=25 mm
Number of bolts (in tension)	bn=8
Distance to first row of bolts	e1=75 mm
Distance to beam flange	x=15 mm
Pitch of tension bolts	p1=90 mm
End distance to shear bolts	e1'=100 mm
Bolt cross-centres	p3=100 mm
Width of end plate	bp=250 mm
Assumed web fillet weld size	sww=8 mm
Assumed flange fillet weld size	swf=12 mm

SUMMARY OF BOLT POTENTIAL RESISTANCES

Top row of bolts	Pr1=406.66 kN
Row 2	Pr2=328 kN
Row 3	Pr3=249.34 kN
Row 4	Pr4=170.69 kN

Beam tension flange welds

Selected fillet weld size	swt=12 mm

Beam web welds

Selected fillet weld size	sfw=8 mm
Resistance of weld for shear	FwRds=2*0.7*sfw*fvwd*Lws/10^3 =220.33 kN
Vertical shear	VEd=60 kN

FLANGE SPLICE

Assumptions:
- the flange plate(s) resist a compressive force, FcEdp
- the splice uses preloaded HSFG bolts to avoid producing bolt slip and consequent additional beam deflection.

Flange cover plate details

Thickness of flange cover plate	tfp=15 mm
Width of flange cover plate	bfp=210 mm

Flange cover plate bolt details

Bolt cross-centres	p3fp=140 mm
Total no. of bolts in cover plate	np=20
Pitch of bolts (along the beam)	p1fp=70 mm
Spacing of bolts across beams	spac=150 mm
End distance in flange plate	e1fp=50 mm
Edge distance at cross centres	e2fp=(bfp-p3fp)/2=35 mm
Projection of flange cover plate	P=(np/4-1)*p1fp+spac/2+e1fp=405 mm
Length of flange cover plate	hfp=2*P=810 mm

Slip resistance of one fastener - EC3 Part 1-8

Slip resistance	FsRd=ks*n*mu*Fpc/1.25=79.072 kN

CONNECTION SUMMARY - all dimensions in diagram are in mm

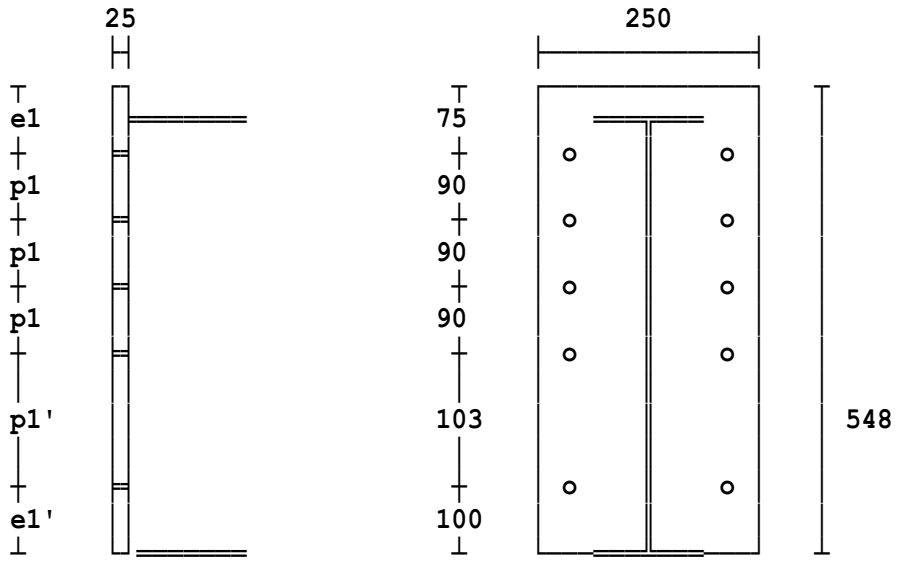

NOTE: Bottom flange cover plate omitted for clarity.

Bolt grade	**8.8**	
Bolt diameter	**24 mm**	
Welds	**Tension flange fillet weld**	**12 mm**
	Web fillet weld	**8 mm**
	Compression flange fillet weld	**8 mm**
Beam / Rafter section	**533 x 210 x 92 UKB**	

FLANGE COVER PLATE SUMMARY - all dimensions in diagram are in mm

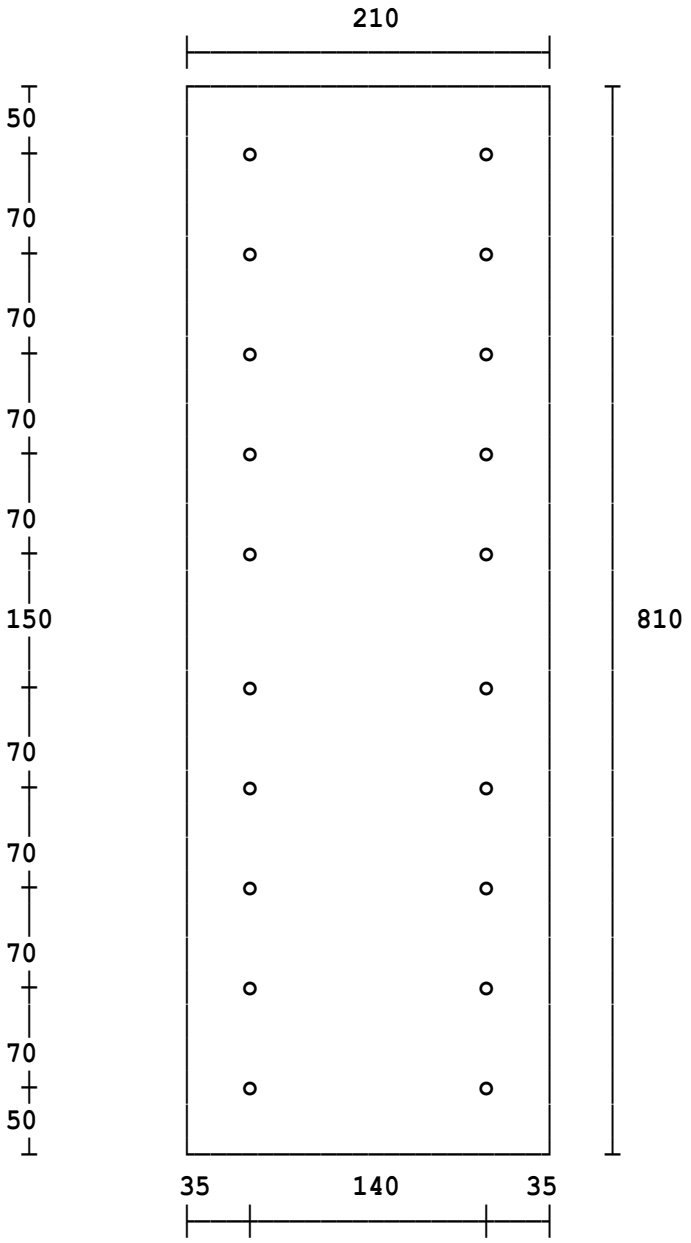

Flange cover plate	**210 mm x 15 mm x 810 mm**
Number of bolts	**20**
Bolt diameter	**24 mm**
Bolt grade	**Preloaded (HSFG), general grade (8.8) with grade 10 nuts.**

Location: Ex3 - Splice in beam 1.5 m from wall

Flush beam splice with end plates and single flange plate

Calculations are in accordance with EC3 Parts 1-1, 1-5, 1-8 and follow the procedure given in the SCI publication P398 entitled 'Joints in Steel Construction Moment-Resisting Joints to Eurocode 3'.

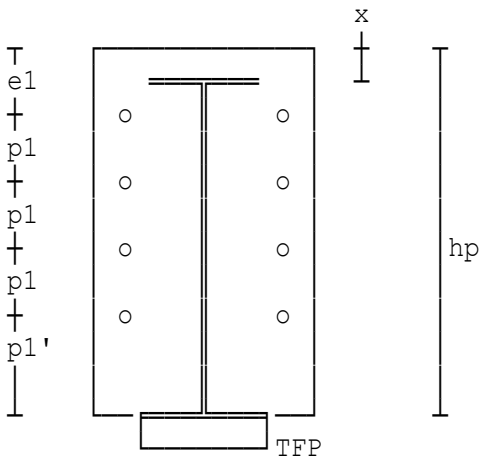

Design assumptions

- all bolts will resist the applied shear force
- connection consists of two identical beam & end plate arrangements
- moment is not reversible
- tension flange plate (TFP) as shown in diagram.

Factored moment	MyEd=30 kNm
Factored shear force	VEd=20 kN
Axial force (+ve compression)	NEd=0 kN

Beam details

152 x 152 x 37 UKC

End plate details

Diameter of bolts	db=20 mm
Thickness of plate	tp=16 mm
Number of bolts (in shear)	bn=4
Distance to first row of bolts	e1=72 mm
Distance to beam flange	x=16 mm
Pitch of remaining bolts	p1=50 mm
Bolt cross-centres	p3=90 mm
Width of end plate	bp=156 mm
Assumed web fillet weld size	sww=8 mm
Assumed flange fillet weld size	swf=8 mm

Beam tension flange welds

Beam web welds

Full strength weld used
Selected fillet weld size sfw=8 mm

FLANGE SPLICE

Assumptions:
- the flange plate(s) resist a tensile force, FtEdp
- the splice uses preloaded HSFG bolts to avoid producing bolt slip and consequent additional beam deflection.

Flange cover plate details

Thickness of flange cover plate	tfp=16 mm
Width of flange cover plate	bfp=154 mm

Flange cover plate bolt details

Bolt cross-centres	p3fp=90 mm
Total no. of bolts in cover plate	np=8
Pitch of bolts (along the beam)	p1fp=50 mm
Spacing of bolts across beams	spac=120 mm
End distance in flange plate	e1fp=75 mm
Edge distance at cross centres	e2fp=(bfp-p3fp)/2=32 mm
Projection of flange cover plate	P=(np/4-1)*p1fp+spac/2+e1fp=185 mm
Length of flange cover plate	hfp=2*P=370 mm

Slip resistance of one fastener - EC3 Part 1-8

Slip resistance	FsRd=ks*n*mu*Fpc/1.25=54.88 kN

CONNECTION SUMMARY - all dimensions in diagram are in mm

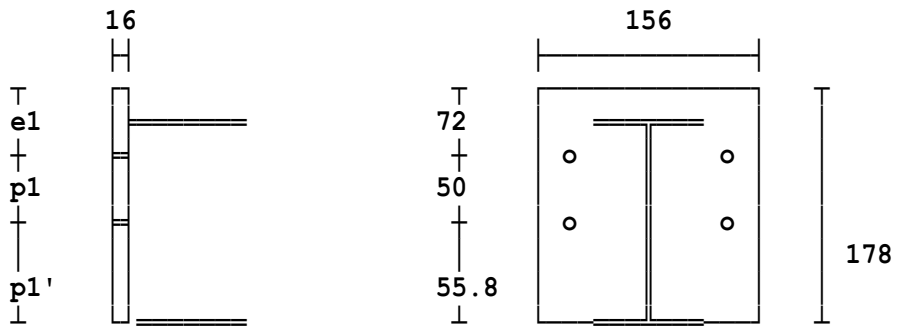

NOTE: Bottom flange cover plate omitted for clarity.

Bolt grade	**8.8**	
Bolt diameter	**20 mm**	
Welds	**Tension flange fillet weld**	**8 mm**
	Web fillet weld	**8 mm**
	Compression flange fillet weld	**8 mm**
Beam / Rafter section	**152 x 152 x 37 UKC**	

FLANGE COVER PLATE SUMMARY - all dimensions in diagram are in mm

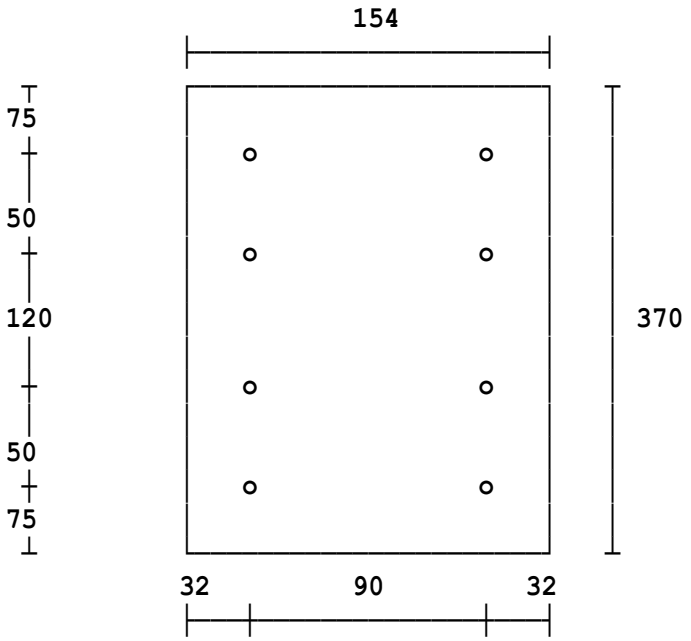

Flange cover plate	**154 mm x 16 mm x 370 mm**
Number of bolts	**8**
Bolt diameter	**20 mm**
Bolt grade	**Preloaded (HSFG), higher grade (10.9) with grade 12 nuts.**

Location: Ex4 - As example 3 with double plates using HSFG bolts

Flush beam splice with end plates and single flange plate

Calculations are in accordance with EC3 Parts 1-1, 1-5, 1-8 and follow the procedure given in the SCI publication P398 entitled 'Joints in Steel Construction Moment-Resisting Joints to Eurocode 3'.

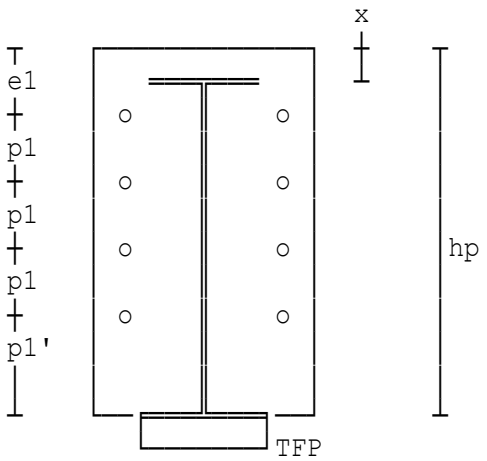

Design assumptions

- all bolts will resist the applied shear force
- connection consists of two identical beam & end plate arrangements
- moment is not reversible
- tension flange plate (TFP) as shown in diagram.

Factored moment	MyEd=30 kNm
Factored shear force	VEd=20 kN
Axial force (+ve compression)	NEd=0 kN

Beam details

152 x 152 x 37 UKC

End plate details

Diameter of bolts	db=20 mm
Thickness of plate	tp=16 mm
Number of bolts (in shear)	bn=4
Distance to first row of bolts	e1=72 mm
Distance to beam flange	x=16 mm
Pitch of remaining bolts	p1=50 mm
Bolt cross-centres	p3=90 mm
Width of end plate	bp=156 mm
Assumed web fillet weld size	sww=8 mm
Assumed flange fillet weld size	swf=8 mm

Beam tension flange welds

Beam web welds

Selected fillet weld size	sfw=6 mm
Resistance of weld for shear	FwRds=2*0.7*sfw*fvwd*Lws/10^3 =231.31 kN
Vertical shear	VEd=20 kN

FLANGE SPLICE

Assumptions:
- the flange plate(s) resist a tensile force, FtEdp
- the splice uses preloaded HSFG bolts to avoid producing bolt slip and consequent additional beam deflection.

Flange cover plate details

Thickness of flange cover plate	tfp=16 mm
Width of flange cover plate	bfp=154 mm

Flange cover plate bolt details

Bolt cross-centres	p3fp=90 mm
Total no. of bolts in cover plate	np=8
Pitch of bolts (along the beam)	p1fp=50 mm
Spacing of bolts across beams	spac=120 mm
End distance in flange plate	e1fp=75 mm
Edge distance at cross centres	e2fp=(bfp-p3fp)/2=32 mm
Projection of flange cover plate	P=(np/4-1)*p1fp+spac/2+e1fp=185 mm
Length of flange cover plate	hfp=2*P=370 mm

Slip resistance of one fastener - EC3 Part 1-8

Slip resistance	FsRd=ks*n*mu*Fpc/1.25=54.88 kN

CONNECTION SUMMARY - all dimensions in diagram are in mm

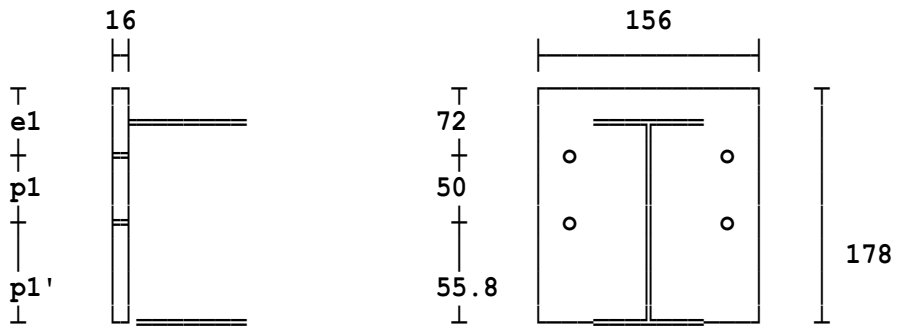

NOTE: Bottom flange cover plate omitted for clarity.

Bolt grade	**8.8**	
Bolt diameter	**20 mm**	
Welds	**Tension flange fillet weld**	**8 mm**
	Web fillet weld	**6 mm**
	Compression flange fillet weld	**8 mm**
Beam / Rafter section	**152 x 152 x 37 UKC**	

FLANGE COVER PLATE SUMMARY - all dimensions in diagram are in mm

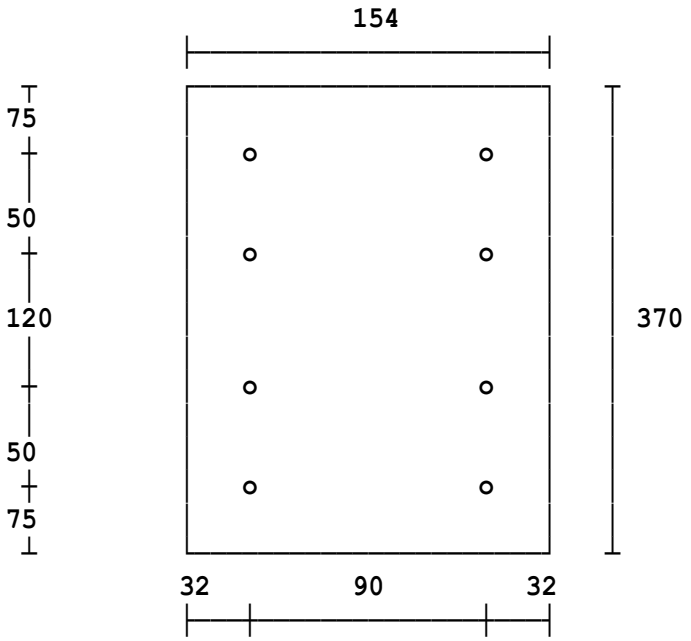

Flange cover plate	**154 mm x 16 mm x 370 mm**
Number of bolts	**8**
Bolt diameter	**20 mm**
Bolt grade	**Preloaded (HSFG), higher grade (10.9) with grade 12 nuts.**

Location: Ex5 - Same as Ex4 but with hsfg=1 and bigger UB section

Flush beam splice with end plates and single flange plate

Calculations are in accordance with EC3 Parts 1-1, 1-5, 1-8 and follow the procedure given in the SCI publication P398 entitled 'Joints in Steel Construction Moment-Resisting Joints to Eurocode 3'.

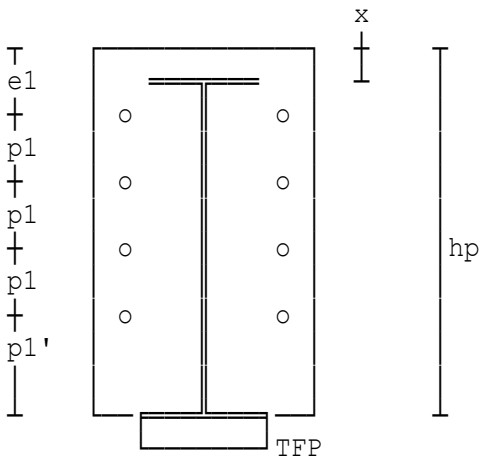

Design assumptions

- all bolts will resist the applied shear force
- connection consists of two identical beam & end plate arrangements
- moment is not reversible
- tension flange plate (TFP) as shown in diagram.

Factored moment	MyEd=30 kNm
Factored shear force	VEd=20 kN
Axial force (+ve compression)	NEd=0 kN

Beam details

457 x 191 x 67 UKB

End plate details

Diameter of bolts	db=20 mm
Thickness of plate	tp=16 mm
Number of bolts (in shear)	bn=6
Distance to first row of bolts	e1=72 mm
Distance to beam flange	x=16 mm
Pitch of remaining bolts	p1=50 mm
Bolt cross-centres	p3=90 mm
Width of end plate	bp=190 mm
Assumed web fillet weld size	sww=8 mm
Assumed flange fillet weld size	swf=8 mm

Slip resistance of one fastener - EC3 Part 1-8

Slip resistance	FsRd=ks*n*mu*Fpc/1.25=43.904 kN

Beam tension flange welds

Beam web welds

Selected fillet weld size	sfw=6 mm
Resistance of weld for shear	FwRds=2*0.7*sfw*fvwd*Lws/10^3 =762.79 kN
Vertical shear	VEd=20 kN

FLANGE SPLICE

Assumptions:
- the flange plate(s) resist a tensile force, FtEdp
- the splice uses preloaded HSFG bolts to avoid producing bolt slip and consequent additional beam deflection.

Flange cover plate details

Thickness of flange cover plate	tfp=16 mm
Width of flange cover plate	bfp=190 mm

Flange cover plate bolt details

Bolt cross-centres	p3fp=90 mm
Total no. of bolts in cover plate	np=8
Pitch of bolts (along the beam)	p1fp=50 mm
Spacing of bolts across beams	spac=120 mm
End distance in flange plate	e1fp=100 mm
Edge distance at cross centres	e2fp=(bfp-p3fp)/2=50 mm
Projection of flange cover plate	P=(np/4-1)*p1fp+spac/2+e1fp=210 mm
Length of flange cover plate	hfp=2*P=420 mm

Slip resistance of one fastener - EC3 Part 1-8

Slip resistance	FsRd=ks*n*mu*Fpc/1.25=43.904 kN

CONNECTION SUMMARY - all dimensions in diagram are in mm

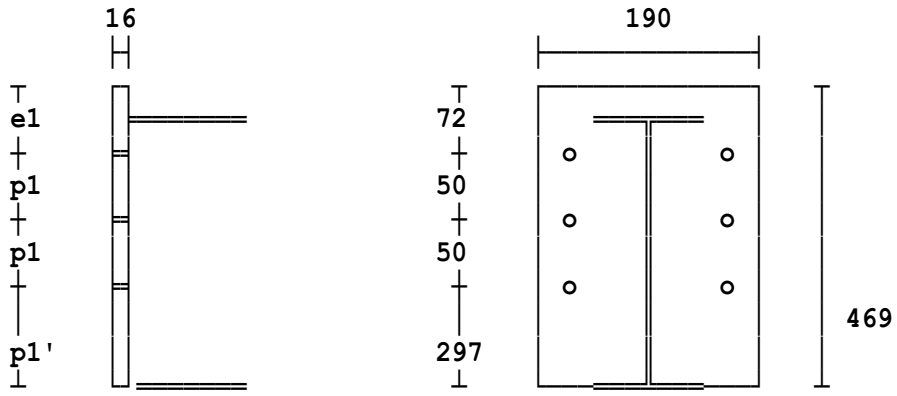

NOTE: Bottom flange cover plate omitted for clarity.

Bolt grade	**Preloaded (HSFG), general grade (8.8) with grade 10 nuts.**	
Bolt diameter	**20 mm**	
Welds	**Tension flange fillet weld**	**8 mm**
	Web fillet weld	**6 mm**
	Compression flange fillet weld	**8 mm**
Beam / Rafter section	**457 x 191 x 67 UKB**	

FLANGE COVER PLATE SUMMARY - all dimensions in diagram are in mm

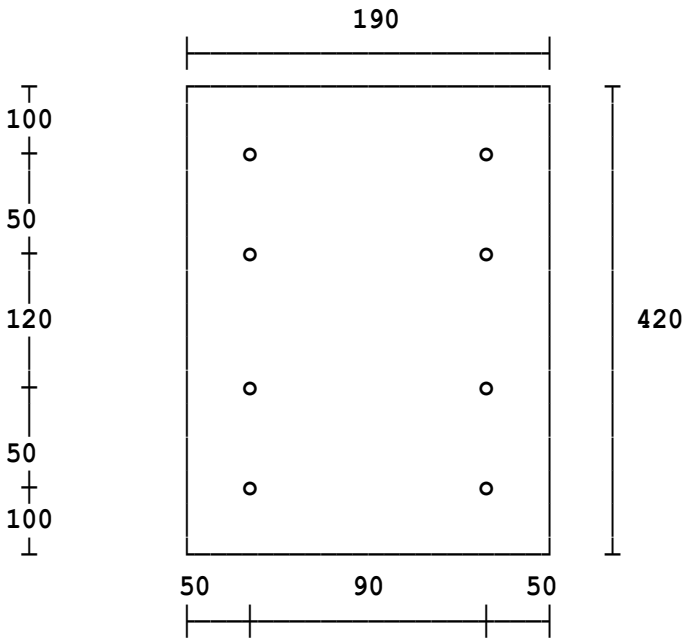

Flange cover plate	**190 mm x 16 mm x 420 mm**
Number of bolts	**8**
Bolt diameter	**20 mm**
Bolt grade	**Preloaded (HSFG), general grade (8.8) with grade 10 nuts.**

Location: Ex6 - Same as Ex4 but using Grade 8.8 bolts

Flush beam splice with end plates and single flange plate

Calculations are in accordance with EC3 Parts 1-1, 1-5, 1-8 and follow the procedure given in the SCI publication P398 entitled 'Joints in Steel Construction Moment-Resisting Joints to Eurocode 3'.

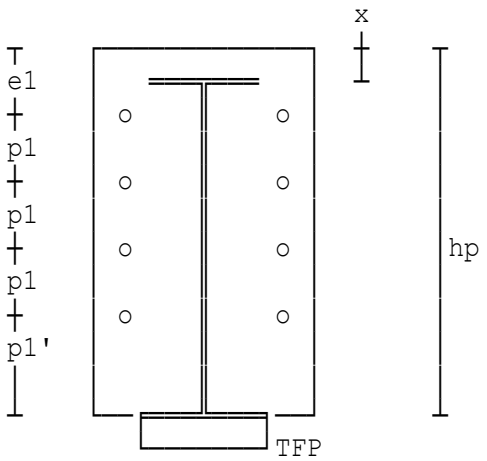

Design assumptions

- all bolts will resist the applied shear force
- connection consists of two identical beam & end plate arrangements
- moment is not reversible
- tension flange plate (TFP) as shown in diagram.

Factored moment	MyEd=30 kNm
Factored shear force	VEd=20 kN
Axial force (+ve compression)	NEd=0 kN

Beam details

152 x 152 x 37 UKC

End plate details

Diameter of bolts	db=20 mm
Thickness of plate	tp=16 mm
Number of bolts (in shear)	bn=4
Distance to first row of bolts	e1=72 mm
Distance to beam flange	x=16 mm
Pitch of remaining bolts	p1=50 mm
Bolt cross-centres	p3=90 mm
Width of end plate	bp=156 mm
Assumed web fillet weld size	sww=8 mm
Assumed flange fillet weld size	swf=8 mm

Beam tension flange welds

Beam web welds

Selected fillet weld size	sfw=6 mm
Resistance of weld for shear	FwRds=2*0.7*sfw*fvwd*Lws/10^3 =231.31 kN
Vertical shear	VEd=20 kN

FLANGE SPLICE

Assumptions:
- the flange plate(s) resist a tensile force, FtEdp
- the splice uses 8.8 bolts as excessive beam deflection is considered to be unlikely.

Flange cover plate details

Thickness of flange cover plate tfp=16 mm
Width of flange cover plate bfp=154 mm

Flange cover plate bolt details

Bolt cross-centres p3fp=90 mm
Total no. of bolts in cover plate np=8
Pitch of bolts (along the beam) p1fp=50 mm
Spacing of bolts across beams spac=120 mm
End distance in flange plate e1fp=75 mm
Edge distance at cross centres e2fp=(bfp-p3fp)/2=32 mm
Projection of flange cover plate P=(np/4-1)*p1fp+spac/2+e1fp=185 mm
Length of flange cover plate hfp=2*P=370 mm

CONNECTION SUMMARY - all dimensions in diagram are in mm

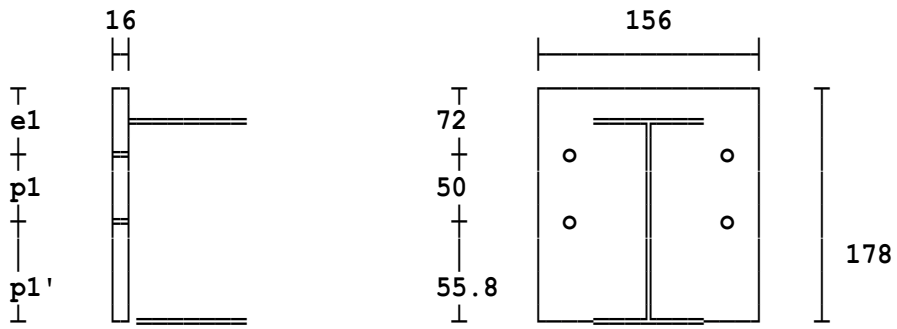

NOTE: Bottom flange cover plate omitted for clarity.

Bolt grade	**8.8**	
Bolt diameter	**20 mm**	
Welds	**Tension flange fillet weld**	**8 mm**
	Web fillet weld	**6 mm**
	Compression flange fillet weld	**8 mm**
Beam / Rafter section	**152 x 152 x 37 UKC**	

FLANGE COVER PLATE SUMMARY - all dimensions in diagram are in mm

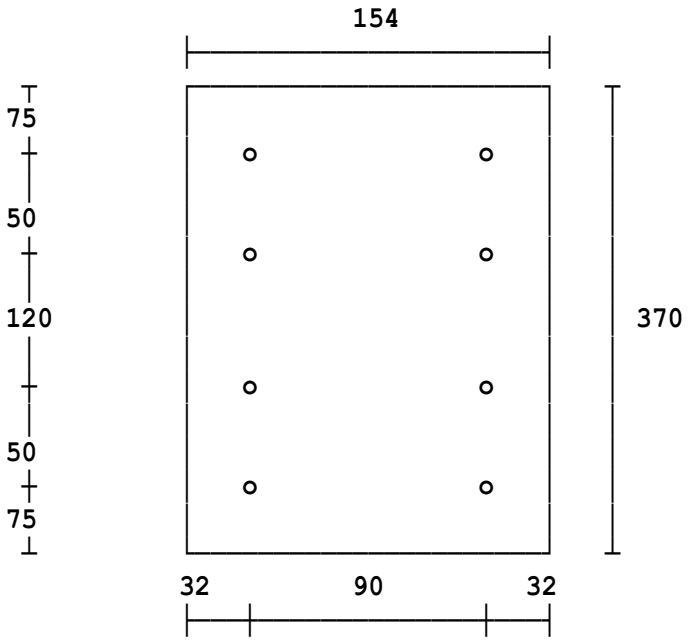

Flange cover plate	**154 mm x 16 mm x 370 mm**
Number of bolts	**8**
Bolt diameter	**20 mm**
Bolt grade	**8.8**

Location: Default example

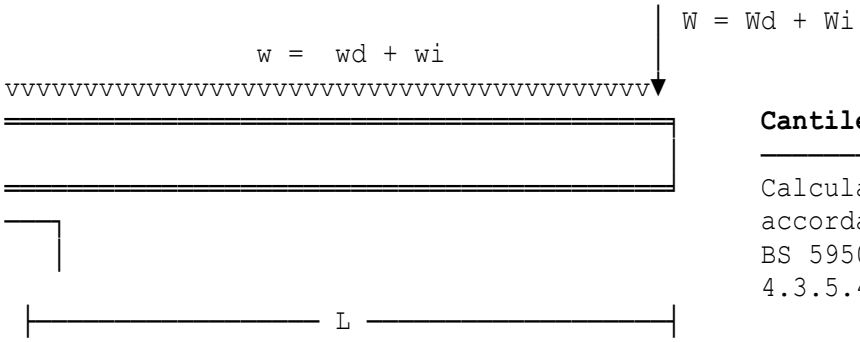

Cantilevered beam

Calculations are in accordance with BS5950 BS 5950-1:2000 clause 4.3.5.4 or 4.3.5.5.

Cantilever span	L=2 m
254 x 146 x 43 UB.	
Young's Modulus	E=205 kN/mm²
Dead load (including self weight)	wd=8 kN/m
Imposed load	wi=10 kN/m
Dead load	Wd=10 kN
Imposed load	Wi=6 kN

UNIVERSAL BEAM	**254 x 146 x 43 UKB Grade S 275**	
DESIGN SUMMARY	**Design shear force**	**78 kN**
	Shear capacity	**308.4 kN**
	Design moment	**101.6 kNm**
	Moment capacity	**155.65 kNm**
	Buckling resistance	**108.32 kNm**
	Deflection	**5.8676 mm**

Location: Ex1 - Default example

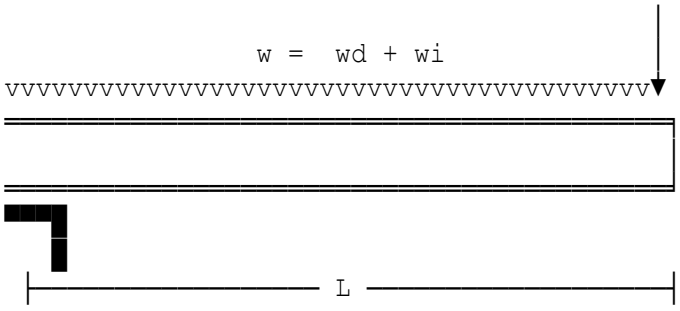

Cantilevered beam

Calculations are in accordance with EC3 Part 1-1 : 2005.

Cantilever span L=2 m

254 x 146 x 43 UKB
Dimensions (mm): h=259.6 b=147.3 tw=7.2 tf=12.7 r=7.6
Properties (cm): Iy=6540 Iz=677 Wply=566 Wplz=141 It=23.9

Permanent load (SW included)	wd=8 kN/m
Variable load	wi=10 kN/m
Permanent load	Wd=10 kN
Variable load	Wi=6 kN
Buckling length for LTB	LT=3.2 m

UNIVERSAL BEAM	**254 x 146 x 43 UKB Grade**	**S 275**
DESIGN SUMMARY	**Section yield strength**	**275 N/mm²**
	Design moment	**96.6 kNm**
	Buckling resistance BM	**125.95 kNm**
	Design shear force	**74.1 kN**
	Shear plastic resistance	**321.2 kN**
	Deflection to span ratio	**1: 349**
	Interaction factors	**0.62062 ≤ 1**
		0.23069 ≤ 1
		0.76699 ≤ 1

Location: Ex2 - Channel section

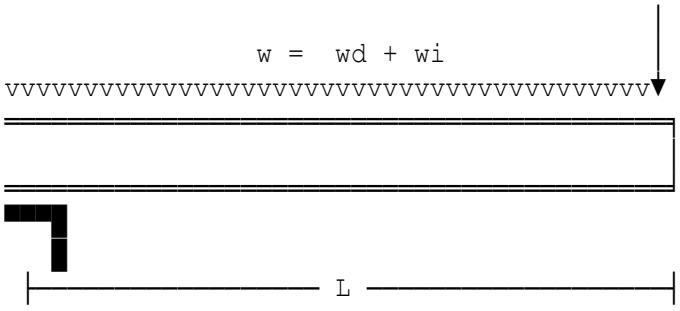

Cantilevered beam

Calculations are in accordance with EC3 Part 1-1 : 2005.

Cantilever span L=3 m

380 x 100 UKPFC
Dimensions (mm): h=380 b=100 tw=9.5 tf=17.5 r=15
Properties (cm): Iy=15000 Iz=643 Wply=933 Wplz=161 It=45.7

Permanent load (SW included) wd=9 kN/m
Variable load wi=12 kN/m
Buckling length for LTB LT=3 m

PARALLEL FLANGE CHANNEL DESIGN SUMMARY	**380 x 100 Grade S 275**	
	Section yield strength	**265 N/mm²**
	Design moment	**135.68 kNm**
	Buckling resistance BM	**158.06 kNm**
	Design shear force	**90.45 kN**
	Shear plastic resistance	**581.2 kN**
	Deflection to span ratio	**1: 444**
	Interaction factors	**0.54875 ≤ 1**
		0.15563 ≤ 1
		0.85836 ≤ 1

Location: Ex1 - Default example

```
                w =  wd + wi
vvvv
```

Location: Ex2 - Default example plus axial load

```
                w =  wd + wi
vvvv
```

Location: Ex3 - Channel section

```
                w =  wd + wi
vvvv
```

Location: Ex4 - Channel section plus fire check

```
                w =  wd + wi
vvvv
```

Location: Ex1 - UB section in bending and axial load

```
                 w =  wd + wi
vvvv
```

Location: Ex2 - UB section with compressive axial load

```
                w =  wd + wi
vvvv
```

Location: Ex3 - Channel section with compressive axial load

```
                w =  wd + wi
vvvv
```

Location: Ex4 - Channel section no axial load

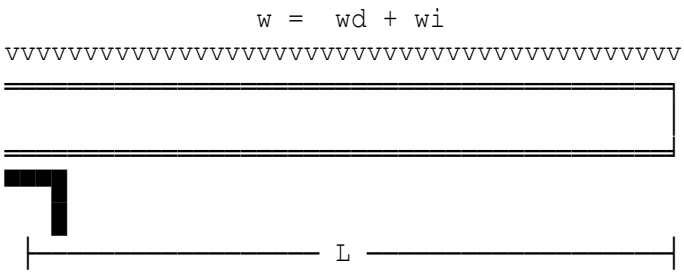

Cantilevered beam

Calculations are in accordance with EC3 Part 1-1 : 2005.

Design moment about major axis MyEd=130 kNm
Design shear force VzEd=89 kN
Design axial load (+ve comp) NEd=0 kN
Length of member L=1.5 m
430 x 100 UKPFC
Dimensions (mm): h=430 b=100 tw=11 tf=19 r=15
Properties (cm): Iy=21900 Iz=722 Wply=1220 Wplz=176 It=63
Buckling length for LTB LT=2.73 m

PARALLEL FLANGE CHANNEL	**430 x 100 Grade S 275**	
DESIGN SUMMARY	**Section yield strength**	**265 N/mm²**
	Design moment	**130 kNm**
	Buckling resistance BM	**193.27 kNm**
	Design shear force	**89 kN**
	Shear plastic resistance	**750.3 kN**
	Interaction factors	**0.4021 ≤ 1**
		0.11862 ≤ 1
		0.67262 ≤ 1

Location: Ex5 - UB section in bending and tension

```
                w =  wd + wi
vvvv
```

Location: Ex1 - Beam with biaxial bending and axial load

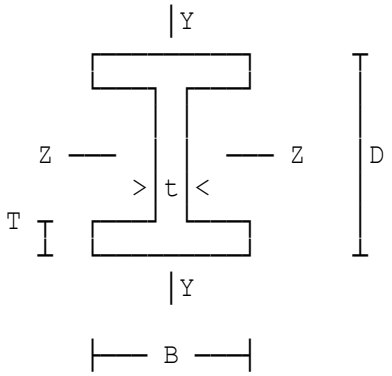

Open Section Beam

Calculations in accordance with BS5950-1:2000.

All loads and moments are factored.

Design moment about z-z axis	Mz=530 kNm
Design shear force	Fv=95 kN
Design axial load (+ve comp)	F=160 kN
Length of member	L=5.6 m
Design moment about minor axis	My=0 kNm
Design shear force // flanges	Fvz=0 kN

533 x 210 x 82 UB.

Young's Modulus	E=205 kN/mm²
Length between restraints z axis	Lz=5600 mm
Length between restraints y axis	Ly=1600 mm
Length between restraints	LT=1.6 m
Maximum moment on segment	MLT=530 kNm
Far end BM	betaM=378.6 kNm
Maximum moment on segment	Mz'=530 kNm
Far end BM	betaMz=0 kNm

Member buckling resistance

Overall buckling check - Clause 4.8.3.3.2

For members with moments about major axis only
For major axis in-plane buckling

$$\frac{F}{Pcz} + \frac{mz.Mz}{Mcz}\left[1 + 0.5\frac{F}{Pcz}\right] \leq 1.0$$

Unity relationship unity=F/Pcz+mz*Mz/Mcz*(1+0.5*F/Pcz)
=0.48843

The unity relationship is satisfied.
For out-of-plane buckling,

$$\frac{Fc}{Pcy} + \frac{mLT.MLT}{Mb} \leq 1.0$$

Unity relationship ufy=F/Pcy+mLT*MLT/Mb=0.6948
The unity relationship is satisfied.

UNIVERSAL BEAM SECTION SUMMARY	**533 x 210 x 82 UB Grade S 355 Section is satisfactory for bending, axial load, local capacity, and overall buckling check.**	
DESIGN SUMMARY	**Axial load (+ve comp)**	**160 kN**
	Compressive resistance	**3402.2 kN**
	Maximum moment(z-axis)	**530 kNm**
	Moment resistance	**731.3 kNm**
	Local capacity check	**0.76766 ≤ 1**
	Overall buckling check	**0.48843 ≤ 1**
		0.6948 ≤ 1

Deflection check is beyond the scope of this proforma. It has been assumed that the beam deflection is satisfactory or not critical.

Location: Ex2 As Ex1 but with reduced axial load - no restraint

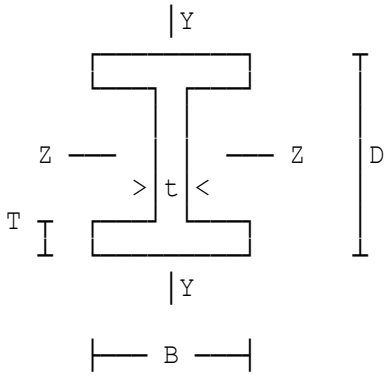

Open Section Beam

Calculations in accordance with BS5950-1:2000.

All loads and moments are factored.

Design moment about z-z axis	Mz=400 kNm
Design shear force	Fv=95 kN
Design axial load (+ve comp)	F=160 kN
Length of member	L=5.6 m
Design moment about minor axis	My=0 kNm
Design shear force // flanges	Fvz=0 kN

533 x 210 x 82 UB.

Young's Modulus	E=205 kN/mm²
Length between restraints z axis	Lz=5600 mm
Length between restraints y axis	Ly=5600 mm
Length between restraints	LT=5.6 m
Maximum moment on segment	MLT=400 kNm
Far end BM	betaM=0 kNm
Maximum moment on segment	Mz'=530 kNm
Far end BM	betaMz=0 kNm

Member buckling resistance

Overall buckling check - Clause 4.8.3.3.2

For members with moments about major axis only
For major axis in-plane buckling

$$\frac{F}{Pcz} + \frac{mz.Mz}{Mcz}\left[1 + 0.5\frac{F}{Pcz}\right] \leq 1.0$$

Unity relationship unity=F/Pcz+mz*Mz/Mcz*(1+0.5*F/Pcz)
=0.37942

The unity relationship is satisfied.
For out-of-plane buckling,

$$\frac{Fc}{Pcy} + \frac{mLT.MLT}{Mb} \leq 1.0$$

Unity relationship ufy=F/Pcy+mLT*MLT/Mb=0.99052
The unity relationship is satisfied.

UNIVERSAL BEAM SECTION SUMMARY	**533 x 210 x 82 UB Grade S 355 Section is satisfactory for bending, axial load, local capacity, and overall buckling check.**	
DESIGN SUMMARY	**Axial load (+ve comp)**	**160 kN**
	Compressive resistance	**1086.1 kN**
	Maximum moment(z-axis)	**400 kNm**
	Moment resistance	**731.3 kNm**
	Local capacity check	**0.5899 ≤ 1**
	Overall buckling check	**0.37942 ≤ 1**
		0.99052 ≤ 1

Deflection check is beyond the scope of this proforma. It has been assumed that the beam deflection is satisfactory or not critical.

Location: Ex3 - Semi-compact section

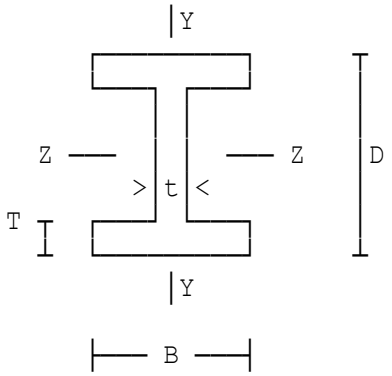

Open Section Beam

Calculations in accordance with BS5950-1:2000.

All loads and moments are factored.

Design moment about z-z axis	Mz=45 kNm
Design shear force	Fv=23 kN
Design axial load (+ve comp)	F=525 kN
Length of member	L=5 m
Design moment about minor axis	My=0 kNm
Design shear force // flanges	Fvz=0 kN

406 x 140 x 39 UB.

Young's Modulus	E=205 kN/mm²
Length between restraints z axis	Lz=5000 mm
Length between restraints y axis	Ly=2500 mm
Length between restraints	LT=2.5 m
Maximum moment on segment	MLT=45 kNm
Far end BM	betaM=22.5 kNm
Maximum moment on segment	Mz'=45 kNm
Far end BM	betaMz=0 kNm

Member buckling resistance

Overall buckling check - Clause 4.8.3.3.2

For members with moments about major axis only
For major axis in-plane buckling

$$\frac{F}{Pcz} + \frac{mz.Mz}{Mcz}\left[1 + 0.5\frac{F}{Pcz}\right] \leq 1.0$$

Unity relationship unity=F/Pcz+mz*Mz/Mcz*(1+0.5*F/Pcz)
=0.57479

The unity relationship is satisfied.
For out-of-plane buckling,

$$\frac{Fc}{Pcy} + \frac{mLT.MLT}{Mb} \leq 1.0$$

Unity relationship ufy=F/Pcy+mLT*MLT/Mb=0.91792
The unity relationship is satisfied.

UNIVERSAL BEAM SECTION SUMMARY	**406 x 140 x 39 UB Grade S 275 Section is satisfactory for bending, axial load, local capacity, and overall buckling check.**	
DESIGN SUMMARY	**Axial load (+ve comp)**	**525 kN**
	Compressive resistance	**828.12 kN**
	Maximum moment(z-axis)	**45 kNm**
	Moment resistance	**181.81 kNm**
	Local capacity check	**0.63163 ≤ 1**
	Overall buckling check	**0.57479 ≤ 1**
		0.91792 ≤ 1

Deflection check is beyond the scope of this proforma. It has been assumed that the beam deflection is satisfactory or not critical.

Location: Ex4 - Biaxial bending

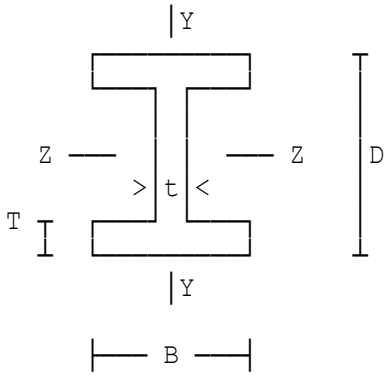

Open Section Beam

Calculations in accordance with BS5950-1:2000.

All loads and moments are factored.

Design moment about z-z axis	Mz=230 kNm
Design shear force	Fv=65 kN
Design axial load (+ve comp)	F=1500 kN
Length of member	L=4.3 m
Design moment about minor axis	My=87 kNm
Design shear force // flanges	Fvz=0 kN

305 x 305 x 118 UC.

Young's Modulus	E=205 kN/mm²
Length between restraints z axis	Lz=4300 mm
Length between restraints y axis	Ly=4300 mm
Length between restraints	LT=4.3 m
Maximum moment on segment	MLT=230 kNm
Far end BM	betaM=-100 kNm
Maximum moment on segment	Mz'=230 kNm
Far end BM	betaMz=-100 kNm
Maximum moment on segment	My'=87 kNm
Far end BM	betaMy=23 kNm
Maximum moment on segment	Mmaxy=87 kNm
Far end BM	betay=23 kNm

Member buckling resistance

Overall buckling check - Clause 4.8.3.3.2

For members with moments about both axes
For major axis in-plane buckling

$$\frac{F}{Pcz} + \frac{mz.Mz}{Mcz}\left[1 + 0.5\frac{F}{Pcz}\right] + 0.5\frac{myz.My}{Mcy} \leq 1.0$$

Unity relationship unity=F/Pcz+mz*Mz/Mcz*(1+0.5*F/Pcz)+0.5*(myz*My /Mcy)=0.5985

The unity relationship is satisfied.

For lateral torsional buckling,

$$\frac{F}{Pcy} + \frac{mLT.MLT}{Mb} + \frac{my.My}{Mcy}\left[1 + \frac{F}{Pcy}\right] \leq 1.0$$

Unity relationship ufy=F/Pcy+mLT*MLT/Mb+my*My/Mcy*(1+F/Pcy)=0.77781

The unity relationship is satisfied.

For interactive buckling

$$\frac{mz.Mz(1+0.5F/Pcz)}{Mcz(1-F/Pcz)} + \frac{my.My(1+F/Pcy)}{Mcy(1-F/Pcy)} \leq 1.0$$

Unity relationship z term uz=mz*Mz*(1+0.5*F/Pcz)/(Mcz*(1-F/Pcz))=0.2853

Unity relationship y term uy=my*My*(1+F/Pcy)/(Mcy*(1-F/Pcy))=0.40653

Unity relationship Unb=uz+uy=0.69183

The unity relationship is satisfied.

UNIVERSAL COLUMN SECTION SUMMARY	**305 x 305 x 118 UC Grade S 355 Section is satisfactory for bending, axial load, local capacity, and overall buckling check.**	
DESIGN SUMMARY	**Axial load (+ve comp)**	**1500 kN**
	Compressive resistance	**4442 kN**
	Maximum moment(z-axis)	**230 kNm**
	Moment resistance	**676.2 kNm**
	Maximum moment(y-axis)	**87 kNm**
	Moment resistance	**305.05 kNm**
	Local capacity check	**0.91519 ≤ 1**
	Overall buckling check	**0.5985 < 1**
		0.77781 ≤ 1
		0.69183 ≤ 1

Deflection check is beyond the scope of this proforma. It has been assumed that the beam deflection is satisfactory or not critical.

Location: Ex5 - With fire check

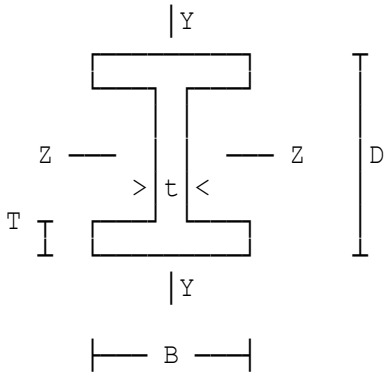

Open Section Beam

Calculations in accordance with BS5950-1:2000.

All loads and moments are factored.

Design moment about z-z axis	Mz=530 kNm
Design shear force	Fv=95 kN
Design axial load (+ve comp)	F=160 kN
Length of member	L=5.6 m
Design moment about minor axis	My=0 kNm
Design shear force // flanges	Fvz=0 kN

533 x 210 x 82 UB.

Young's Modulus	E=205 kN/mm²
Length between restraints z axis	Lz=5600 mm
Length between restraints y axis	Ly=1600 mm
Length between restraints	LT=1.6 m
Maximum moment on segment	MLT=530 kNm
Far end BM	betaM=378.6 kNm
Maximum moment on segment	Mz'=530 kNm
Far end BM	betaMz=0 kNm

Member buckling resistance

Overall buckling check - Clause 4.8.3.3.2

For members with moments about major axis only
For major axis in-plane buckling

$$\frac{F}{Pcz} + \frac{mz.Mz}{Mcz}\left[1 + 0.5\frac{F}{Pcz}\right] \leq 1.0$$

Unity relationship unity=F/Pcz+mz*Mz/Mcz*(1+0.5*F/Pcz)
=0.48843

The unity relationship is satisfied.
For out-of-plane buckling,

$$\frac{Fc}{Pcy} + \frac{mLT.MLT}{Mb} \leq 1.0$$

Unity relationship ufy=F/Pcy+mLT*MLT/Mb=0.6948
The unity relationship is satisfied.

UNIVERSAL BEAM SECTION SUMMARY	**533 x 210 x 82 UB Grade S 355 Section is satisfactory for bending, axial load, local capacity, and overall buckling check.**	
DESIGN SUMMARY	**Axial load (+ve comp)**	**160 kN**
	Compressive resistance	**3402.2 kN**
	Maximum moment(z-axis)	**530 kNm**
	Moment resistance	**731.3 kNm**
	Local capacity check	**0.76766 ≤ 1**
	Overall buckling check	**0.48843 ≤ 1**
		0.6948 ≤ 1

Deflection check is beyond the scope of this proforma. It has been assumed that the beam deflection is satisfactory or not critical.

Location: Ex1 - Beam with biaxial bending and axial load

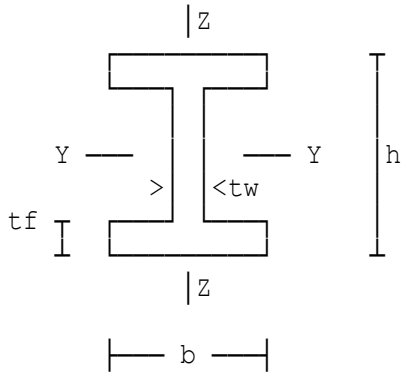

Open Section Beam

Calculations in accordance with BS EN 1993-1-1:2005. Internal forces and moments have been determined by elastic global analysis.

All forces and moments are factored.

Design moment about major axis	MyEd=30 kNm
Design shear force	VzEd=10 kN
Design axial load (+ve comp)	NEd=590 kN
Length of member	L=5 m
Moment about the minor axis	MzEd=1 kNm
Design shear force // to flanges	VyEd=0.6 kN

203 x 203 x 46 UKC
Dimensions (mm): h=203.2 b=203.6 tw=7.2 tf=11 r=10.2
Properties (cm): Iy=4570 Iz=1550 Wply=497 Wplz=231 It=22.2

Effective length parameter	K=1
Length for LTB	LT=5 m
Maximum moment on section	M=30 kNm
Far end moment	psiM=0 kNm
Far end bending moment	pM(1)=0 kNm
Far end bending moment	pM(2)=0 kNm
Far end bending moment	pM(3)=0 kNm

Interaction equations

$$\frac{NEd}{\chi y.NRd} + kyy\frac{MyEd}{\chi LT.MyRd} + kyz\frac{MzEd}{MzRd} \leq 1$$

Unity factor Un1=NEd/(chiy*NRd)+kyy*MyEd/(ChiLT*MyRd)+kyz*MzEd/MzRd
=0.62179
Section chosen is suitable.

$$\frac{NEd}{\chi z.NRd} + kzy\frac{MyEd'}{\chi LT.MyRd} + kzz\frac{MzEd}{MzRd} \leq 1$$

where, the maximum moment on segment MyEd'=30 kNm

Unity factor Un2=NEd/(chiz*NRd)+kzy*MyEd'/(ChiLT*MyRd)+kzz*MzEd/MzRd
=0.96296
Section chosen is suitable.

UNIVERSAL COLUMN	**203 x 203 x 46 UKC Grade S 275**	
DESIGN	**Design BM y-y axis**	**30 kNm**
SUMMARY	**Moment resistance (y-y)**	**136.68 kNm**
	Design BM z-z axis	**1 kNm**
	Moment resistance (z-z)	**63.525 kNm**
	Design compression load	**590 kN**
	Axial resistance	**1614.3 kN**
	Interaction factors	**0.62179 ≤ 1**
		0.96296 ≤ 1

Deflection check is beyond the scope of this proforma. It has been assumed that the beam deflection is satisfactory or not critical.

Location: Ex2 - Moment about major axis and load

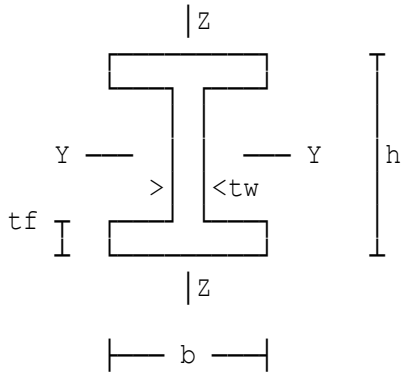

Open Section Beam

Calculations in accordance with BS EN 1993-1-1:2005. Internal forces and moments have been determined by elastic global analysis.

All forces and moments are factored.

Design moment about major axis	MyEd=60 kNm
Design shear force	VzEd=30 kN
Design axial load (+ve comp)	NEd=600 kN
Length of member	L=6 m
Moment about the minor axis	MzEd=0 kNm
Design shear force // to flanges	VyEd=0 kN

254 x 254 x 89 UKC
Dimensions (mm): h=260.3 b=256.3 tw=10.3 tf=17.3 r=12.7
Properties (cm): Iy=14300 Iz=4860 Wply=1220 Wplz=575 It=102

Effective length parameter	K=1
Length for LTB	LT=6 m
Maximum moment on section	M=60 kNm
Far end moment	psiM=-30 kNm
Far end bending moment	pM(1)=-30 kNm
Far end bending moment	pM(3)=-30 kNm

Interaction equations

$$\frac{NEd}{\chi y.NRd} + kyy\frac{MyEd}{\chi LT.MyRd} + kyz\frac{MzEd}{MzRd} \leq 1$$

Unity factor Un1=NEd/(chiy*NRd)+kyy*MyEd/(ChiLT*MyRd)+kyz*MzEd/MzRd
=0.32123
Section chosen is suitable.

$$\frac{NEd}{\chi z.NRd} + kzy\frac{MyEd'}{\chi LT.MyRd} + kzz\frac{MzEd}{MzRd} \leq 1$$

where, the maximum moment on segment MyEd'=60 kNm

Unity factor Un2=NEd/(chiz*NRd)+kzy*MyEd'/(ChiLT*MyRd)+kzz*MzEd/MzRd
=0.52312
Section chosen is suitable.

UNIVERSAL COLUMN	**254 x 254 x 89 UKC Grade S 275**	
DESIGN	**Design BM y-y axis**	**60 kNm**
SUMMARY	**Moment resistance (y-y)**	**323.3 kNm**
	Design compression load	**600 kN**
	Axial resistance	**2994.5 kN**
	Interaction factors	**0.32123 ≤ 1**
		0.52312 ≤ 1

Deflection check is beyond the scope of this proforma. It has been assumed that the beam deflection is satisfactory or not critical.

Location: Ex3 - Moment about minor axis and load

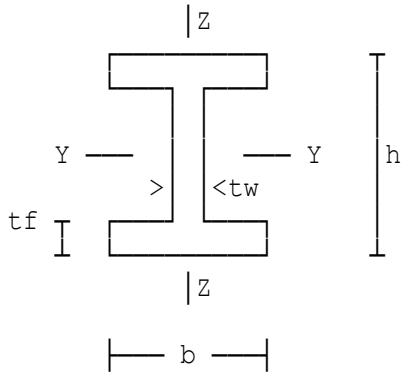

Open Section Beam

Calculations in accordance with BS EN 1993-1-1:2005. Internal forces and moments have been determined by elastic global analysis.

All forces and moments are factored.

Design moment about major axis	MyEd=0 kNm
Design shear force	VzEd=0 kN
Design axial load (+ve comp)	NEd=800 kN
Length of member	L=6 m
Moment about the minor axis	MzEd=30 kNm
Design shear force // to flanges	VyEd=16 kN

254 x 254 x 89 UKC
Dimensions (mm): h=260.3 b=256.3 tw=10.3 tf=17.3 r=12.7
Properties (cm): Iy=14300 Iz=4860 Wply=1220 Wplz=575 It=102
Far end bending moment pM(2)=0 kNm

Interaction equations

$$\frac{NEd}{\chi y.NRd} + kyz\frac{MzEd}{MzRd} \leq 1$$

Unity factor Un1=NEd/(chiy*NRd)+kyz*MzEd/MzRd
=0.4416

Section chosen is suitable.

$$\frac{NEd}{\chi z.NRd} + kzz\frac{MzEd}{MzRd} \leq 1$$

Unity factor Un2=NEd/(chiz*NRd)+kzz*MzEd/MzRd
=0.71666

Section chosen is suitable.

UNIVERSAL COLUMN	**254 x 254 x 89 UKC Grade S 275**	
DESIGN	**Design BM y-y axis**	**0 kNm**
SUMMARY	**Moment resistance (y-y)**	**323.3 kNm**
	Design BM z-z axis	**30 kNm**
	Moment resistance (z-z)	**152.38 kNm**
	Design compression load	**800 kN**
	Axial resistance	**2994.5 kN**
	Interaction factors	**0.4416 ≤ 1**
		0.71666 ≤ 1

Deflection check is beyond the scope of this proforma. It has been assumed that the beam deflection is satisfactory or not critical.

Location: Ex4 - Tensile load and moments

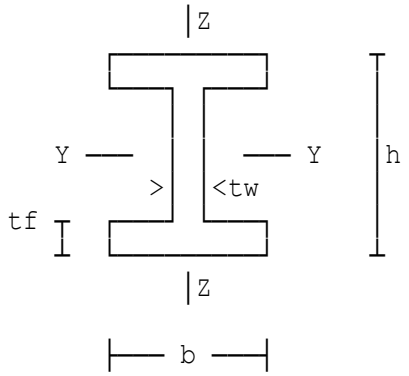

Open Section Beam

Calculations in accordance with BS EN 1993-1-1:2005. Internal forces and moments have been determined by elastic global analysis.

All forces and moments are factored.

Design moment about major axis	MyEd=60 kNm
Design shear force	VzEd=30 kN
Design axial load (+ve comp)	NEd=-1000 kN
Length of member	L=6 m
Moment about the minor axis	MzEd=30 kNm
Design shear force // to flanges	VyEd=16 kN

254 x 254 x 89 UKC
Dimensions (mm): h=260.3 b=256.3 tw=10.3 tf=17.3 r=12.7
Properties (cm): Iy=14300 Iz=4860 Wply=1220 Wplz=575 It=102

Effective length parameter	K=1
Length for LTB	LT=6 m
Maximum moment on section	M=60 kNm
Far end moment	psiM=0 kNm

Interaction equation

$$\frac{NEd}{NRd} + \frac{MyEd}{\chi LT.MyRd} + \frac{MzEd}{MzRd} \leq 1$$

Unity factor Un1=NtEd/NRd+MyEd/(ChiLT*MyRd)+MzEd /MzRd=0.71641

Section chosen is suitable.

UNIVERSAL COLUMN	**254 x 254 x 89 UKC Grade S 275**	
DESIGN	**Design BM y-y axis**	**60 kNm**
SUMMARY	**Moment resistance (y-y)**	**323.3 kNm**
	Design BM z-z axis	**30 kNm**
	Moment resistance (z-z)	**152.38 kNm**
	Design tensile load	**1000 kN**
	Axial resistance	**2994.5 kN**
	Interaction factors	**0.71641 ≤ 1**

Deflection check is beyond the scope of this proforma. It has been assumed that the beam deflection is satisfactory or not critical.

Location: Ex1 - Channel Section Design

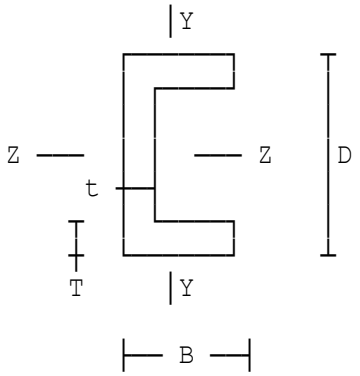

Channel Section Design

Calculations in accordance with BS5950-1:2000.

All forces and moments are factored.

Design moment about z-z axis	Mz=250 kNm
Design shear force	Fv=95 kN
Design axial load (+ve comp)	F=160 kN
Length of member	L=5 m
Design moment about minor axis	My=1 kNm
Design shear force // to flanges	Fvz=5 kN

380 x 100 Parallel Flange Channel.

Young's Modulus	E=205 kN/mm²
Length between restraints z axis	Lz=5000 mm
Length between restraints y axis	Ly=1500 mm
Length between restraints	LT=1.5 m
Maximum moment on segment	MLT=250 kNm

Member buckling resistance

Overall buckling check - Clause 4.8.3.3.2

For members with moments about both axes the major axis in-plane buckling is as follows:

$$\frac{F}{Pcz} + \frac{mz.Mz}{Mcz}\left[1 + 0.5\frac{F}{Pcz}\right] + 0.5\frac{myz.My}{Mcy} \leq 1.0$$

Unity relationship:

unity=F/Pcz+mz*Mz/Mcz*(1+0.5*F/Pcz)+0.5*(myz*My/Mcy)
=0.89278

Hence, the unity relationship is satisfied.
For lateral torsional buckling:

$$\frac{F}{Pcy} + \frac{mLT.MLT}{Mb} + \frac{my.My}{Mcy}\left[1 + \frac{F}{Pcy}\right] \leq 1.0$$

Unity relationship ufy=F/Pcy+mLT*MLT/Mb+my*My/Mcy*(1+F/Pcy)=0.98062

Hence, the unity relationship is satisfied.

For interactive buckling:

$$\frac{mz.Mz(1+0.5F/Pcz)}{Mcz(1-F/Pcz)} + \frac{my.My(1+F/Pcy)}{Mcy(1-F/Pcy)} \leq 1.0$$

Unity relationship z term uz=mz*Mz*(1+0.5*F/Pcz)/(Mcz*(1-F/Pcz))=0.87227

Unity relationship y term uy=my*My*(1+F/Pcy)/(Mcy*(1-F/Pcy))=0.025738

Unity relationship Unb=uz+uy=0.898

Hence, the unity relationship is satisfied.

PARALLEL FLANGE CHANNEL SECTION SUMMARY	**380 x 100 Grade S 355**	
	Section is satisfactory for bending, axial load, local capacity, and overall buckling check.	
DESIGN SUMMARY	**Axial load (+ve comp)**	**160 kN**
	Compressive resistance	**1861.2 kN**
	Maximum moment(z-axis)	**250 kNm**
	Moment resistance	**321.89 kNm**
	Maximum moment(y-axis)	**1 kNm**
	Moment resistance	**46.161 kNm**
	Local capacity check	**0.86584 ≤ 1**
	Overall buckling check	**0.89278 < 1**
		0.98062 ≤ 1
		0.898 ≤ 1

Deflection check is beyond the scope of this proforma. It has been assumed that the beam deflection is satisfactory or not critical.

Location: Ex1 - Channel Section Design

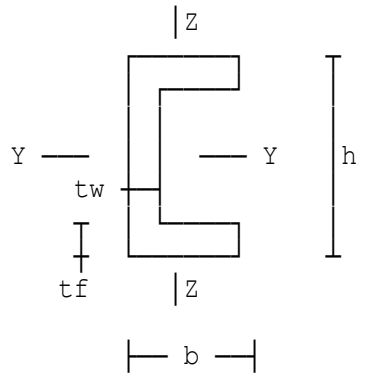

Channel Section Design

Calculations in accordance with BS EN 1993-1-1:2005. Internal forces and moments have been determined by elastic global analysis.

All forces and moments are factored.

Design moment about major axis MyEd=30 kNm
Design shear force VzEd=10 kN
Design axial load (+ve comp) NEd=300 kN
Length of member L=5 m
Moment about the minor axis MzEd=1 kNm
Design shear force // to flanges VyEd=0.6 kN
380 x 100 UKPFC
Dimensions (mm): h=380 b=100 tw=9.5 tf=17.5 r=15
Properties (cm): Iy=15000 Iz=643 Wply=933 Wplz=161 It=45.7
A=68.7 Cy=2.7915 Iw=0.15 iy=14.776 iz=3.0593
Wely=789.47 Welz=89.2
Unity expression unity=(MyEd/MyNRd)^ap+(MzEd /MzNRd)^bp=0.038161
Section is suitable for the combination of bending and axial force.
Effective length parameter K=1
Length for LTB LT=5 m
Maximum moment on section M=30 kNm
Far end moment psiM=0 kNm
Far end bending moment pM(1)=0 kNm
Far end bending moment pM(2)=0 kNm
Far end bending moment pM(3)=0 kNm

Interaction equations

$$\frac{NEd}{\chi y.NRd} + kyy\frac{MyEd}{\chi LT.MyRd} + kyz\frac{MzEd}{MzRd} \leq 1$$

Unity factor Unity1=NEd/(chiy*NRd)+kyy*MyEd/(ChiLT*MyRd)+kyz*MzEd/MzRd =0.34243
Hence, section chosen is suitable.

$$\frac{NEd}{\chi z.NRd} + kzy\frac{MyEd}{\chi LT.MyRd} + kzz\frac{MzEd}{MzRd} \leq 1$$

Unity factor Unity2=NEd/(chiz*NRd)+kzy*MyEd'/(ChiLT*MyRd)+kzz*MzEd /MzRd=0.9681
Hence, section chosen is suitable.

CHANNEL	**380 x 100 UKPFC**	
SECTION	**Parallel flange Channel Grade S 275**	
DESIGN	**Design BM y-y axis**	**30 kNm**
SUMMARY	**Moment resistance (y-y)**	**247.25 kNm**
	Design BM z-z axis	**1 kNm**
	Moment resistance (z-z)	**42.665 kNm**
	Design compression load	**300 kN**
	Axial resistance	**1820.6 kN**
	Design buckling resist.	**408.53 kN**
	Interaction factors	**0.34243 ≤ 1**
		0.9681 ≤ 1

Deflection check is beyond the scope of this proforma. It has been assumed that the beam deflection is satisfactory or not critical.

Location: Example 4.1 SCI examples

```
   <————————xn———————>| Wn
                      ▼      w = wd + wi
   vvvvvvvvvvvvvvvvvvvvvvvvvvvvvvvvvvvvvvvv
  ╔═══════════════════════════════════════╗
  ╚═══════════════════════════════════════╝
 A═══════════════════════════════════════B
 ═══╗                                   ╔═══
    ╚                                   ╚
 >b1<                                  >b1<

   <————————————— L ——————————————>
```

Simply supported

fully restrained beam

Point load n is shown
Wn = Wnd + Wni
where,
Wnd=dead point load
Wni=imposed point load

Beam span	L=6.5 m
457 x 191 x 67 UB.	
Young's Modulus	E=205 kN/mm²
Dead UDL (including S.W)	wd=15 kN/m
Imposed UDL	wi=20 kN/m
Dead point load 1 (+ve down)	W1d=40 kN
Imposed point load 1	W1i=50 kN
Distance from L.H. supp to load 1	x1=3.25 m
Force applied through flange	Fbw=240.25 kN
Stiff bearing length	b1=50 mm
Distance to nearer end	be=0 mm
Distance to nearer end of member	ae=25 mm
Permanent load	wp=25 kN/m
Permanent load	W1p=56 kN

SECTION	**457 x 191 x 67 UKB Grade S 355**	
	Shear force	**240.25 kN**
DESIGN	**Shear capacity**	**820.88 kN**
SUMMARY	**Applied moment**	**500.91 kNm**
	Moment capacity	**521.85 kNm**
	Deflection	**12.459 mm**
	Limiting deflection	**18.056 mm**
	Applied flange force	**240.25 kN**
	Local web capacity	**289.08 kN**
	Web buckling capacity	**148.79 kN**

Bearing stiffeners are required and possibly at positions of high point loads.

Unfactored end shears	**DL shear at A**	**68.75 kN**
	LL shear at A	**90 kN**
	DL shear at B	**68.75 kN**
	LL shear at B	**90 kN**
FIRE	**Exposed surface area**	**1459.5 mm²**
RESISTANCE	**Area of section**	**85.5 cm²**
SUMMARY	**Section factor**	**170 /m**
	Load Ratio (R)	**0.59305**

Section does not have an inherent fire resistance of 30 minutes. Fire protection should be provided.

Location: Moment capacity method of fire resistance

```
   <————————xn———————>| Wn
                      ▼
                          w = wd + wi
   vvvvvvvvvvvvvvvvvvvvvvvvvvvvvvvvvvvvvvvv
  ╔═══════════════════════════════════════╗
  ╚═══════════════════════════════════════╝
 A═══════════════════════════════════════B
 ═══╗                                   ╔═══
    ╚                                   ╚
 >b1<                                  >b1<

   <———————————— L ————————————————>
```

Simply supported

fully restrained beam

Point load n is shown
Wn = Wnd + Wni
where,
Wnd=dead point load
Wni=imposed point load

Beam span	L=6.5 m
457 x 191 x 67 UB.	
Young's Modulus	E=205 kN/mm²
Dead UDL (including S.W)	wd=15 kN/m
Imposed UDL	wi=20 kN/m
Dead point load 1 (+ve down)	W1d=40 kN
Imposed point load 1	W1i=50 kN
Distance from L.H. supp to load 1	x1=3.25 m
Permanent load	wp=25 kN/m
Permanent load	W1p=56 kN

SECTION		**457 x 191 x 67 UKB Grade S 355**	
		Shear force	**240.25 kN**
DESIGN		**Shear capacity**	**820.88 kN**
SUMMARY		**Applied moment**	**500.91 kNm**
		Moment capacity	**521.85 kNm**
		Deflection	**12.459 mm**
		Limiting deflection	**18.056 mm**
	Unfactored end shears	**DL shear at A**	**68.75 kN**
		LL shear at A	**90 kN**
		DL shear at B	**68.75 kN**
		LL shear at B	**90 kN**
FIRE		**Exposed surface area**	**1459.5 mm²**
RESISTANCE		**Area of section**	**85.5 cm²**
SUMMARY		**Section factor**	**170 /m**
		Section does not have an inherent fire resistance of 30 minutes. Fire protection should be provided.	

Location: Example 4.1 SCI examples (with FR check)

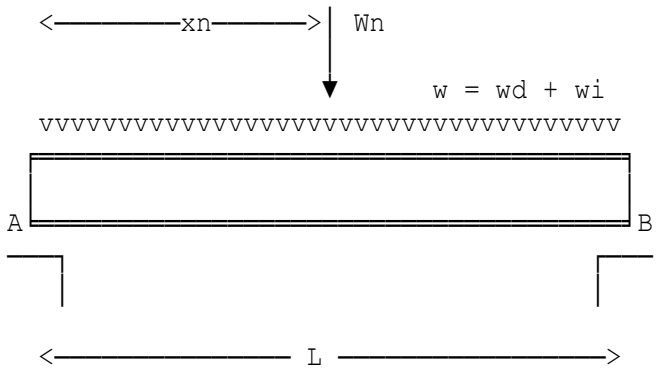

Simply supported

fully restrained beam

Point load n is shown
Wn = Wnd + Wni
where,
Wnd=permanent point load
Wni=variable point load

Beam span L=6.5 m

Permanent UDL (including S.W) wd=15 kN/m
Variable UDL wi=20 kN/m
Permanent point load 1 (+ve down) W1d=40 kN
Variable point load 1 W1i=50 kN
Distance from L.H. supp to load 1 x1=3.25 m
457 x 191 x 67 UKB
Dimensions (mm): h=453.4 b=189.9 tw=8.5 tf=12.7 r=10.2
Properties (cm): Iy=29400 Iz=1450 Wply=1470 Wplz=237 It=37.1
Stiff bearing length ss=50 mm
Stiff bearing position C=0 mm

SECTION	**457 x 191 x 67 UKB Grade**	**S 355**
DESIGN	**Maximum moment**	**460.59 kNm**
SUMMARY	**Moment resistance**	**521.85 kNm**
	Unity factor bending	**0.8826 ≤ 1**
	Maximum shear force	**220.94 kN**
	Shear plastic resistance	**839.02 kN**
	Unity factor shear	**0.26333 ≤ 1**
	Deflection to span ratio	**1: 534**
	Web resistance	**273.37 kN**

Fire resistance without applied protection

The critical temperature method given in BS EN 1993-1-2 Clause 4.2.4 will be adopted. For further clarification refer to thomas telford publication entitled 'Designer's guide to EN 1991-1-2, EN 1992-1-2, EN 1993-1-2 and EN 1994-1-2'.

Factor for variable actions ψ1 psi1=0.5

Maximum moment	MyEd=M=237.66 kNm
Maximum shear force	VzEd=Vb=113.75 kN

Section classification

Classify outstand element of compression flange:
As 9e < c/tf ≤ 10e (6.3386 ≤ 6.9157), outstand element of compression flange is classified as Class 2 compact.
Classify web element of section:
As C/tw ≤ 72e (47.953 ≤ 49.793), web element in bending is classified as Class 1 plastic.

Critical temperature of carbon structural steel

Design moment (fire limit state)	MfiEd=MyEd=237.66 kNm
Design buckling resistance	MbRdfi=McRd=521.85 kNm
Design moment resistance	MfiRd=ky*(gamM0/gamfi)*MbRdfi/(k1 *k2)=745.5 kNm
Critical temperature θacr	taCR=39.19*LOG(comp-1)+482=654.55 °C
Fire resistance period	21 minutes

FIRE RESISTANCE SUMMARY **The section does not have an inherent fire resistance of 30 minutes. Fire protection should be provided.**

Location: High shear

```
<————————xn———————>| Wn
                    ▼      w = wd + wi
vvvvvvvvvvvvvvvvvvvvvvvvvvvvvvvvvvvvvvvv
 ╔═══════════════════════════════════╗
 ╚═══════════════════════════════════╝
A═══════════════════════════════════B
 ┌┘                                 └┐

<———————————— L ————————————————>
```

Simply supported

fully restrained beam

Point load n is shown
Wn = Wnd + Wni
where,
Wnd=permanent point load
Wni=variable point load

Beam span	L=2 m
Permanent UDL (including S.W)	wd=1.2 kN/m
Variable UDL	wi=0 kN/m
Permanent point load 1 (+ve down)	W1d=240 kN
Variable point load 1	W1i=180 kN
Distance from L.H. supp to load 1	x1=1.5 m

457 x 191 x 67 UKB
Dimensions (mm): h=453.4 b=189.9 tw=8.5 tf=12.7 r=10.2
Properties (cm): Iy=29400 Iz=1450 Wply=1470 Wplz=237 It=37.1

SECTION	**457 x 191 x 67 UKB Grade**	**S 275**
DESIGN	**Maximum moment**	**214.31 kNm**
SUMMARY	**Moment resistance**	**363.42 kNm**
	Unity factor bending	**0.58971 ≤ 1**
	Maximum shear force	**429 kN**
	Shear plastic resistance	**649.94 kN**
	Unity factor shear	**0.66006 ≤ 1**
	Deflection to span ratio	**1: 5987**

Location: Example 3, 'Steelwork Design Guide'

```
            w =  wd + wi
  vvvvvvvvvvvvvvvvvvvvvvvvvvvvvvvvvvvvvv
  ╔═══════════════════════════════════╗
  ╚═══════════════════════════════════╝
┌──┐                                 ┌──
│  │                                 │
>b1<                               >b1<

  <──────────────── L ────────────────>
```

Simply supported steel beam restrained at ends

Calculations are in accordance with BS5950-1:2000 Clause 4.3.5.1. Beam has no intermediate lateral restraints.

Beam span	L=9 m
686 x 254 x 125 UB.	
Young's Modulus	E=205 kN/mm²
Dead UDL (including S.W)	wd=10 kN/m
Imposed UDL	wi=15 kN/m
Length between restraints	LT=9 m
Permanent load	wp=16 kN/m

SECTION	**686 x 254 x 125 UKB Grade S 275**	
	Shear force	**171 kN**
DESIGN	**Shear capacity**	**1261.1 kN**
SUMMARY	**Applied moment**	**384.75 kNm**
	Moment capacity	**1057.3 kNm**
	Buckling resistance	**480.33 kNm**
	Moment factor mLT	**0.925**
	Resistance (Mb/mLT)	**519.27 kNm**
	Deflection	**5.2974 mm**
	Limiting deflection	**25 mm**
Unfactored end shears	**DL shear at A**	**45 kN**
	LL shear at A	**67.5 kN**
	DL shear at B	**45 kN**
	LL shear at B	**67.5 kN**
FIRE RESISTANCE	**Heated perimeter**	**2091.4 mm²**
SUMMARY	**Area of section**	**159 cm²**
	Section factor	**130**
	Load Ratio (R)	**0.45236**

Section does not have an inherent fire resistance of 30 minutes. Fire protection should be provided.

Location: Example 2

```
            w =  wd + wi
  vvvvvvvvvvvvvvvvvvvvvvvvvvvvvvvvvvvvvv
  ╔═══════════════════════════════════╗
  ╚═══════════════════════════════════╝
┌──┐                                 ┌──┐
│  │                                 │  │
>b1<                               >b1<

  <──────────────── L ────────────────>
```

Simply supported steel beam restrained at ends

Calculations are in accordance with BS5950-1:2000 Clause 4.3.5.1. Beam has no intermediate lateral restraints.

Beam span	L=5.7 m
457 x 152 x 52 UB.	
Young's Modulus	E=205 kN/mm²
Dead UDL (including S.W)	wd=9.6 kN/m
Imposed UDL	wi=6.25 kN/m
Length between restraints	LT=5.7 m

SECTION	**457 x 152 x 52 UKB Grade S 275**	
	Shear force	**66.804 kN**
DESIGN	**Shear capacity**	**564.05 kN**
SUMMARY	**Applied moment**	**95.196 kNm**
	Moment capacity	**302.5 kNm**
	Buckling resistance	**124.83 kNm**
	Moment factor mLT	**0.925**
	Resistance (Mb/mLT)	**134.95 kNm**
	Deflection	**1.9582 mm**
	Limiting deflection	**15.833 mm**
Unfactored end shears	**DL shear at A**	**27.36 kN**
	LL shear at A	**17.813 kN**
	DL shear at B	**27.36 kN**
	LL shear at B	**17.813 kN**

Location: Example using EC3 (with FR check)

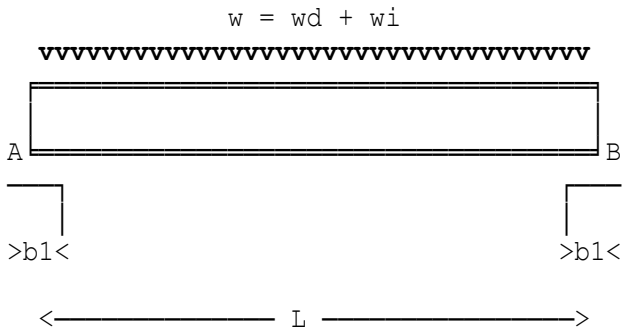

Simply supported beam

restrained at ends

wd=permanent load
wi=variable load

Beam span L=5.7 m

Permanent UDL (including S.W) wd=9.6 kN/m
Variable UDL wi=6.25 kN/m
457 x 152 x 52 UKB
Dimensions (mm): h=449.8 b=152.4 tw=7.6 tf=10.9 r=10.2
Properties (cm): Iy=21400 Iz=645 Wply=1100 Wplz=133 It=21.4

Lateral torsional buckling

Critical moment Mcr=C1*Et*Sr/10^6=139.86 kNm
Design buckling resistance moment MbRd=ChiLT*Wply*fy/10^3=121.5 kNm
Unity factor unitb=MyEd/MbRd=0.71446
Section chosen is considered suitable.

SECTION	**457 x 152 x 52 UKB Grade**	**S 275**
DESIGN	**Maximum moment**	**86.809 kNm**
SUMMARY	**Moment resistance**	**302.5 kNm**
	Unity factor bending	**0.28697 ≤ 1**
	Maximum shear force	**60.919 kN**
	Shear plastic resistance	**578.38 kN**
	Unity factor shear	**0.10533 ≤ 1**
	Deflection to span ratio	**1: 2982**
	Buckling resistance BM	**121.5 kNm**
	Unity factor buckling	**0.71446 ≤ 1**

Fire resistance without applied protection

The critical temperature method given in BS EN 1993-1-2 Clause 4.2.4 will be adopted. For further clarification refer to thomas telford publication entitled 'Designer's guide to EN 1991-1-2, EN 1992-1-2, EN 1993-1-2 and EN 1994-1-2'.

Factor for variable actions ψ1	psi1=0.5
Maximum moment	MyEd=M=51.679 kNm
Maximum shear force	VzEd=Vb=36.266 kN

Section classification

Classify outstand element of compression flange:
As c/tf ≤ 9e (5.7064 ≤ 7.0718), outstand element of compression flange is classified as Class 1 plastic.
Classify web element of section:
As C/tw ≤ 72e (53.632 ≤ 56.574), web element in bending is classified as Class 1 plastic.

Critical temperature of carbon structural steel

Design moment (fire limit state)	MfiEd=MyEd=51.679 kNm
Design buckling resistance	MbRdfi=ChiLTf*McRd=88.637 kNm
Design moment resistance	MfiRd=ky*(gamM0/gamfi)*MbRdfi/(k1 *k2)=126.62 kNm
Critical temperature θacr	taCR=39.19*LOG(comp-1)+482=616.68 °C
Fire resistance period	19 minutes

FIRE RESISTANCE SUMMARY **The section does not have an inherent fire resistance of 30 minutes. Fire protection should be provided.**

Location: Example 2, 'Steelwork Design Guide'

Simply supported steel beam subject to lateral torsional buckling

Calculations are in accordance with BS5950-1:2000. Simple beam with intermediate lateral restraints in accordance with Clause 4.3.5.2.

```
   <————————xn———————> Wn
                          w = wd + wi
   vvvv
```

FIRE RESISTANCE SUMMARY	**Heated perimeter**	**1673.4 mm²**
	Area of section	**114 cm²**
	Section factor	**145**
	Load Ratio (R)	**0.56247**

Section does not have an inherent fire resistance of 30 minutes.
Fire protection should be provided.

Location: Ex1 - Default example (with FR check)

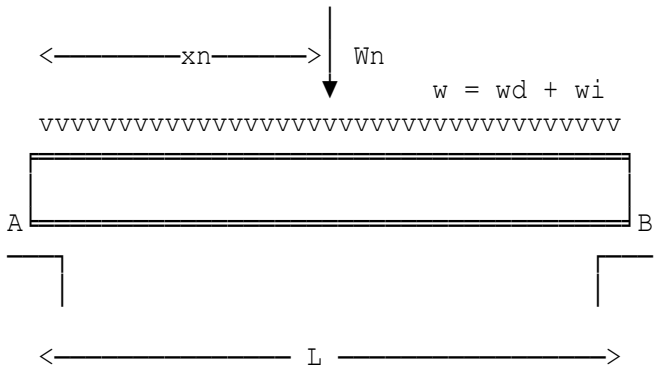

Simply supported beam

Point load n is shown
Wn = Wnd + Wni
where,
Wnd=permanent point load
Wni=variable point load

Beam span L=10 m

Permanent UDL (including S.W) wd=1.44 kN/m
Variable UDL wi=0 kN/m
Permanent point load 1 (+ve down) W1d=140 kN
Variable point load 1 W1i=85 kN
Distance from L.H. supp to load 1 x1=5 m
533 x 210 x 109 UKB
Dimensions (mm): h=539.5 b=210.8 tw=11.6 tf=18.8 r=12.7
Properties (cm): Iy=66800 Iz=2940 Wply=2830 Wplz=436 It=126

Coefficient C1

The beam is restrained at intervals by other steel members.
The member is not loaded between restraints (only beam self weight).
Eff.length between restraints LT=5 m

Lateral torsional buckling

Critical moment Mcr=C1*Et*Sr/10^6=1427.8 kNm
Design buckling resistance moment MbRd=ChiLT*Wply*fy/10^3=832.35 kNm
Section chosen is considered suitable.

SECTION	**533 x 210 x 109 UKB Grade S 355**	
DESIGN	**Maximum moment**	**778.75 kNm**
SUMMARY	**Moment resistance**	**976.35 kNm**
	Unity factor bending	**0.79761 ≤ 1**
	Maximum shear force	**160.25 kN**
	Shear plastic resistance	**1328.5 kN**
	Unity factor shear	**0.12063 ≤ 1**
	Maximum BM on segment	**778.75 kNm**
	Buckling resistance BM	**832.35 kNm**
	Unity factor buckling	**0.93561 ≤ 1**
	Deflection to span ratio	**1: 792**

Fire resistance without applied protection

The critical temperature method given in BS EN 1993-1-2 Clause 4.2.4 will be adopted. For further clarification refer to thomas telford publication entitled 'Designer's guide to EN 1991-1-2, EN 1992-1-2, EN 1993-1-2 and EN 1994-1-2'.

Factor for variable actions ψ1	psi1=0.5
Maximum moment	MyEd=M=474.25 kNm
Maximum shear force	VzEd=Vb=98.45 kN

Section classification

Classify outstand element of compression flange:
As c/tf ≤ 9e (4.6223 ≤ 6.3137), outstand element of compression flange is classified as Class 1 plastic.
Classify web element of section:
As C/tw ≤ 72e (41.078 ≤ 50.51), web element in bending is classified as Class 1 plastic.

Critical temperature of carbon structural steel

Design moment (fire limit state)	MfiEd=MyEd=474.25 kNm
Design buckling resistance	MbRdfi=ChiLTf*McRd=563.46 kNm
Design moment resistance	MfiRd=ky*(gamM0/gamfi)*MbRdfi/(k1 *k2)=804.94 kNm
Critical temperature θacr	taCR=39.19*LOG(comp-1)+482=557.43 °C
Fire resistance period	17 minutes

FIRE RESISTANCE SUMMARY	**The section does not have an inherent fire resistance of 30 minutes. Fire protection should be provided.**

Location: Example 4, 'Design Examples' by Tubes Division

Simply supported steel beam

Calculations are in accordance with BS5950-1:2000 and 'Design Examples to BS5950' published by British Steel Tubes Division.
The beam is assumed to be a square or rectangular hollow section.

```
  <————————xn———————> Wn
                      w = wd + wi
  vvvv
```

Effective length (Table 13)	Le=0.8*Ly*1000=4000 mm
Slenderness (minor axis)	lambda=Le/(ry*10)=65.041
Side ratio D/B (Table 15)	D'B=D/B=1.6667
Limiting slenderness	laml=d'b*275/py=338.19

As actual slenderness is less than limiting slenderness
Lateral Torsional Buckling is not critical and no further
check is required.

Fire resistance of beam

Calculations in accordance with BS 5950-8:2003 and 'Fire Resistant Design of Steel Structures' published by SCI.

Fire resistance without applied protection

The design temperature	temp=TABLE 10 for T=16.4, column=30
	=731.8 deg.C.

The load ratio, R, at the fire limit state is to be calculated from:

$$R = \frac{\text{Moment at the fire limit state}}{\text{Moment capacity at 20 deg.C.}}$$

Permanent load	wp=3 kN/m
Permanent load	W1p=40 kN
Moment capacity	Mc=174.23 kNm
Load ratio	R=Mf/Mc=0.59905

HOT FINISHED	**In accordance with EN 10210**	
RECTANGULAR HOLLOW SECTION	**250 x 150 x 8 RHS Grade S 355**	
HOLLOW	**Applied moment**	**173.75 kNm**
SECTION	**Moment capacity**	**174.23 kNm**
SUMMARY	**Deflection**	**12.274 mm**
	Limiting deflection	**13.889 mm**
Unfactored end shears	**DL shear at A**	**25 kN**
	LL shear at A	**27.5 kN**
	DL shear at B	**25 kN**
	LL shear at B	**27.5 kN**
FIRE RESISTANCE	**Exposed surface area**	**650 mm²**
SUMMARY	**Area of section**	**60.8 cm²**
	Section factor	**105**
	Load Ratio (R)	**0.59905**

Section does not have an inherent fire resistance of 30 minutes.
Fire protection should be provided.

Location: Moment applied about minor axis

Simply supported steel beam

Calculations are in accordance with BS5950-1:2000 and 'Design Examples to BS5950' published by British Steel Tubes Division.
The beam is assumed to be a square or rectangular hollow section.

```
  <————————xn———————> Wn
                      w = wd + wi
  vvvv
```

COLD FORMED	**In accordance with EN 10219**	
RECTANGULAR HOLLOW SECTION	**200 x 400 x 8 RHS Grade S 355**	
HOLLOW	**Applied moment**	**136.25 kNm**
SECTION	**Moment capacity**	**179.38 kNm**
SUMMARY	**Deflection**	**7.6716 mm**
	Limiting deflection	**25 mm**
Unfactored end shears	**DL shear at A**	**20 kN**
	LL shear at A	**22.5 kN**
	DL shear at B	**20 kN**
	LL shear at B	**22.5 kN**

Location: Example 4, 'Design Examples' by Tubes Division

Simply supported steel beam

Calculations are in accordance with BS5950-1:2000 and 'Design Examples to BS5950' published by British Steel Tubes Division.
The beam is assumed to be a square or rectangular hollow section.

```
  <————————xn———————> Wn
                      w = wd + wi
  vvvv
```

Copyright 1986-2024 Fitzroy Systems Ltd.

COLD FORMED	**In accordance with EN 10219**	
CIRCULAR HOLLOW SECTION	**457 O.D. x 8 CHS Grade S 355**	
HOLLOW	**Applied moment**	**320.4 kNm**
SECTION	**Moment capacity**	**515.26 kNm**
SUMMARY	**Deflection**	**25.465 mm**
	Limiting deflection	**60 mm**
Unfactored end shears	**DL shear at A**	**42 kN**
	LL shear at A	**30 kN**
	DL shear at B	**42 kN**
	LL shear at B	**30 kN**

Location: Default example SHS (with FR check)

```
<————————xn———————>| Wn
                   ▼
                        w = wd + wi
vvvv
```

Unity factor unitb=MyEd/MbRd=0.51044
Section chosen is suitable.

HOT FINISHED	**In accordance with EN 10210**	
SQUARE HOLLOW SECTION	**400 x 400 x 12.5 SHS Grade S 355**	
DESIGN	**Maximum moment**	**503.75 kNm**
SUMMARY	**Moment resistance**	**986.9 kNm**
	Unity factor bending	**0.51044 ≤ 1**
	Maximum shear force	**105.25 kN**
	Shear plastic resistance	**1967.6 kN**
	Unity factor shear	**0.053491 ≤ 1**
	Deflection/span ratio	**1071**
	Buckling resistance	**986.9 kNm**

Fire resistance without applied protection

The critical temperature method given in BS EN 1993-1-2 Clause 4.2.4 will be adopted. For further clarification refer to thomas telford publication entitled 'Designer's guide to EN 1991-1-2, EN 1992-1-2, EN 1993-1-2 and EN 1994-1-2'.

Factor for variable actions ψ1	psi1=0.5
Maximum moment	MyEd=M=324.25 kNm
Maximum shear force	VzEd=Vb=68.45 kN

Section classification

Internal part subject to compression (flange):
As C/t ≤ 42e (29 ≤ 29.046), internal element in compression is classified as Class 3 semi-compact.
Internal part subject to bending (web):
As C/t ≤ 72e (29 ≤ 49.793), web element in bending is classified as Class 1 plastic.
Section classification is therefore Class 3.

Critical temperature of carbon structural steel

Design moment (fire limit state)	MfiEd=MyEd=324.25 kNm
Design buckling resistance	MbRdfi=ChiLTf*McRd=768.81 kNm
Design moment resistance	MfiRd=ky*(gamM0/gamfi)*MbRdfi/(k1 *k2)=1098.3 kNm
Critical temperature θacr	taCR=39.19*LOG(comp-1)+482=666.21 °C
Fire resistance period	22 minutes

FIRE RESISTANCE SUMMARY	**The section does not have an inherent fire resistance of 30 minutes. Fire protection should be provided.**

Location: Example RHS

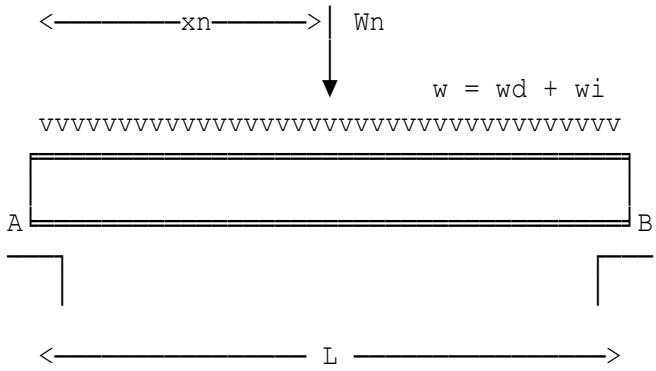

Hollow section

simply supported beam

Point load n is shown
Wn = Wnd + Wni
where,
Wnd=permanent point load
Wni=variable point load

Beam span L=5 m

Permanent UDL (including S.W) wd=3 kN/m
Variable UDL wi=3 kN/m
Permanent point load 1 (+ve down) W1d=40 kN
Variable point load 1 W1i=50 kN
Distance from L.H. supp to load 1 x1=2.5 m
250 x 150 x 16 RHS - Hot finished.
Properties (cm): A=115 iz=5.8 Wely=710 Wply=906 Iy=8880
It=8870 Wt=849 Welz=516 Wplz=625 Iz=3870 iy=8.79

Moment resistance

Moment resistance McRd=Wply*fy/10^3=321.63 kNm
Unity factor unity=MyEd/McRd=0.56596
Section chosen is suitable.

Shear plastic resistance

Shear plastic resistance VplRd=Avz*fy/SQR(3)/1000=1473.1 kN
Unity factor Unity=VzEd/VplRd=0.056427
Section chosen is suitable.
Note: No M-V interaction has to be considered as since the maximum moment occurs near the mid-span and the maximum shear force is obtained at the supports.

Coefficient C1

The beam is assumed to be restrained at point loads.
Length for LTB LT=2.5 m
Eff.length between restraints LT=2.5 m
Coefficient C1=TABLE 3.1 for psi=0
=1.77

Lateral torsional buckling

Critical moment Mcr=C1*Et*Gt^0.5/10^6=16972 kNm
As lamLT ≤ lamLT0,
The segment of the beam is not subject to lateral torsional buckling.
Design buckling resistance moment MbRd=Wply*fy/10^3=321.63 kNm
Unity factor unitb=MyEd/MbRd=0.56596
Section chosen is suitable.
Stiff bearing length b1=75 mm

HOT FINISHED	**In accordance with EN 10210**	
RECTANGULAR HOLLOW SECTION	**250 x 150 x 16 RHS Grade S 355**	
DESIGN	**Maximum moment**	**182.03 kNm**
SUMMARY	**Moment resistance**	**321.63 kNm**
	Unity factor bending	**0.56596 ≤ 1**
	Maximum shear force	**83.125 kN**
	Shear plastic resistance	**1473.1 kN**
	Unity factor shear	**0.056427 ≤ 1**
	Deflection/span ratio	**603**
	Buckling resistance	**321.63 kNm**
	Web resistance	**1215.5 kN**

Location: Cold formed CHS

```
<————————xn———————>| Wn
                    ↓
                        w = wd + wi
vvvvvvvvvvvvvvvvvvvvvvvvvvvvvvvvvvvvvvv
 ╔═══════════════════════════════════╗
 ╚═══════════════════════════════════╝
A                                    B
 ┐                                  ┌

<———————————————— L ————————————————>
```

Hollow section

simply supported beam

Point load n is shown
Wn = Wnd + Wni
where,
Wnd=permanent point load
Wni=variable point load

Beam span	L=10 m
Permanent UDL (including S.W)	wd=1.44 kN/m
Variable UDL	wi=1 kN/m

Location: Example 6 'Structural Steelwork Design'

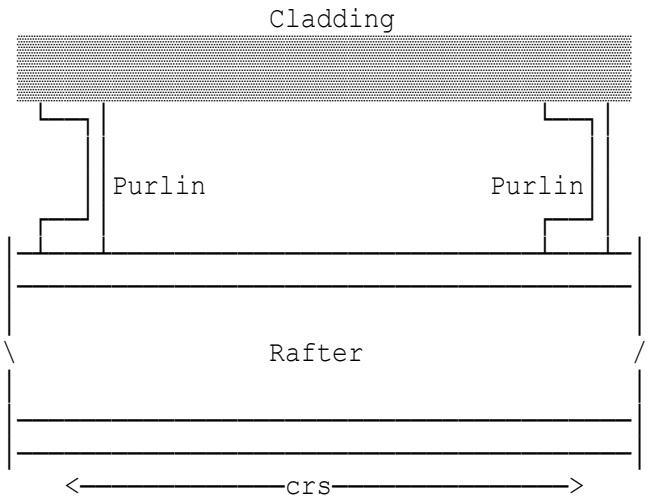

Purlin on sloping roof

Calculations are in accordance with BS 5950 Part 1:2000 and follow Ex 6 of 'Structural Steelwork Design' by L.J.Morris & D.R.Plum.

Purlin centres	crs=2 m
Purlin span (rafter centres)	L=6 m
Angle of rafter with horizontal	theta=20°
Dead load (cladding+insulation)	wd=0.15 kN/m²
Imposed load (on plan)	wi=0.75 kN/m²
Wind load (suction)	ww=0.4 kN/m²

152 x 76 Tapered Channel.

Young's Modulus	E=205 kN/mm²
Unity factor	uf=mx*(-Mx)/(py*Zx/10^3)+my*My/(py *Zy/10^3) =0.21342

Check for deflection under serviceability loads

Total deflection	DEL=5*Wix*L^3*10^5/(384*E*Ix) =12.797 mm
Limiting deflection	DELlim=L*1000/200=30 mm

Since DEL ≤ DELlim (12.797 mm ≤ 30 mm), deflection within limiting value.

PURLIN	**152 x 76**
SECTION	**Tapered flange Channel Grade S 275**
SUMMARY	**Section is satisfactory for bending, shear, combined bending & shear, and deflection.**

Location: Ex1 - Roof purlin with wind suction load using UKPFC

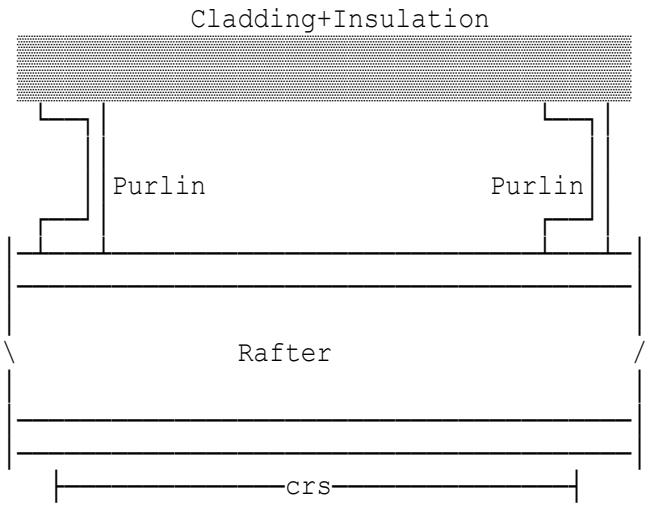

Purlin on sloping roof

Calculations are in accordance with EC3 Part 1-1:2005.

L = purlin span

crs = purlin centres

theta = rafter slope

Purlin centres	crs=2 m
Purlin span (rafter centres)	L=6 m
Angle of rafter with horizontal	theta=20°
Permanent load (cladd+insulation)	gk=0.15 kN/m²
Variable load (on plan)	qk=0.75 kN/m²
Wind suction (input as positive)	wk=0.4 kN/m²

150 x 75 UKPFC

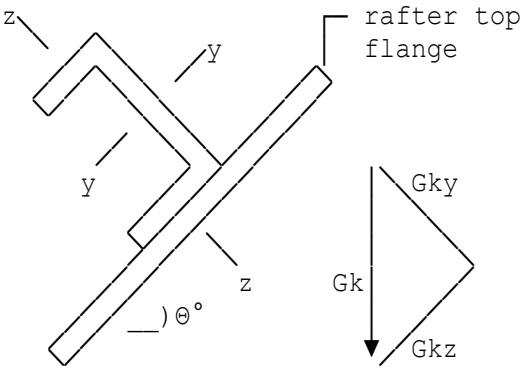

The rafter slope theta=20 degrees results in the purlins at the same angle. Components of load are used to calculate moments about yy & zz axes, i.e. normal and tangential to the rafter. It would be possible to ignore bending in the plane of the cladding, but in practice, biaxial bending is usually considered in purlin design.

Length for LTB	LT=6 m
Equivalent uniform moment factor	Cmy=1
Equivalent uniform moment factor	Cmz=1

DESIGN SUMMARY

150 x 75 UKPFC
Parallel flange Channel Grade S 275
Section is satisfactory for bending, shear, combined bending & shear, and deflection.

Location: Ex2 - Roof purlin w. wind suction load, Tapered flange

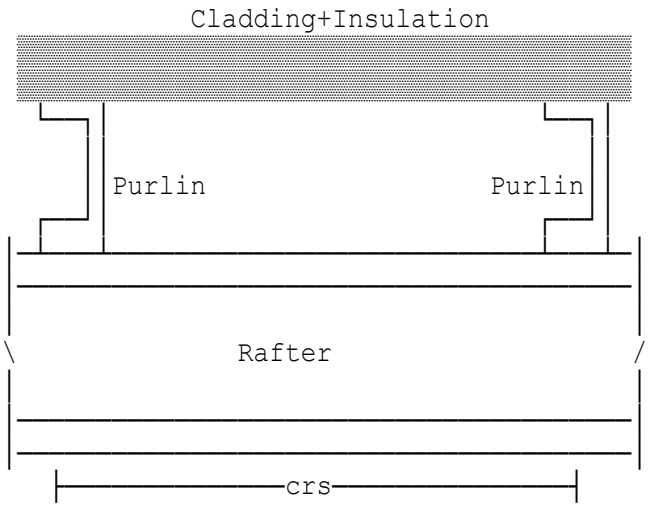

Purlin on sloping roof

Calculations are in accordance with EC3 Part 1-1:2005.

L = purlin span

crs = purlin centres

theta = rafter slope

Purlin centres	crs=2 m
Purlin span (rafter centres)	L=6 m
Angle of rafter with horizontal	theta=20°
Permanent load (cladd+insulation)	gk=0.15 kN/m²
Variable load (on plan)	qk=0.75 kN/m²
Wind suction (input as positive)	wk=0.4 kN/m²

152 x 76 Tapered Channel.

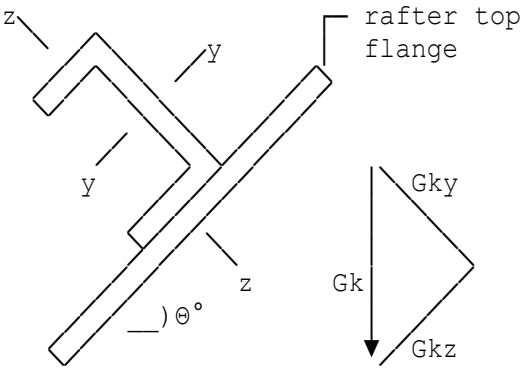

The rafter slope theta=20 degrees results in the purlins at the same angle. Components of load are used to calculate moments about yy & zz axes, i.e. normal and tangential to the rafter. It would be possible to ignore bending in the plane of the cladding, but in practice, biaxial bending is usually considered in purlin design.

Length for LTB	LT=6 m
Equivalent uniform moment factor	Cmy=1
Equivalent uniform moment factor	Cmz=1

DESIGN SUMMARY

152 x 76
Tapered flange Channel Grade S 275
Section is satisfactory for bending, shear, combined bending & shear, and deflection.

Location: Ex3 - Roof purlin user defined section

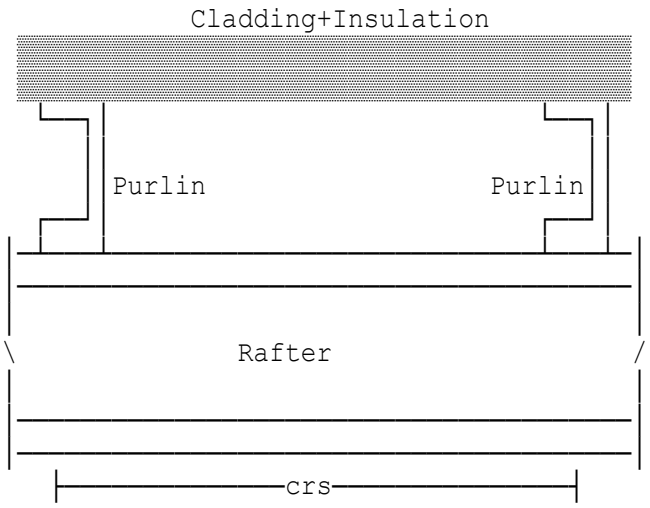

Purlin on sloping roof

Calculations are in accordance with EC3 Part 1-1:2005.

L = purlin span

crs = purlin centres

theta = rafter slope

Purlin centres	crs=2 m
Purlin span (rafter centres)	L=6 m
Angle of rafter with horizontal	theta=20°
Permanent load (cladd+insulation)	gk=0.15 kN/m²
Variable load (on plan)	qk=0.75 kN/m²
Wind suction (input as positive)	wk=0.4 kN/m²

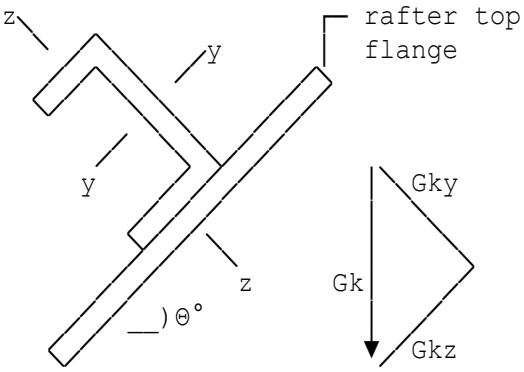

The rafter slope theta=20 degrees results in the purlins at the same angle. Components of load are used to calculate moments about yy & zz axes, i.e. normal and tangential to the rafter. It would be possible to ignore bending in the plane of the cladding, but in practice, biaxial bending is usually considered in purlin design.

Length for LTB	LT=6 m
Equivalent uniform moment factor	Cmy=1
Equivalent uniform moment factor	Cmz=1

DESIGN SUMMARY

150 x 75 User defined channel section
tf=10 mm tw=5.5 mm Grade S 275
Section is satisfactory for bending, shear, combined bending & shear, and deflection.

Location: Example 7 in Structural Steelwork Design

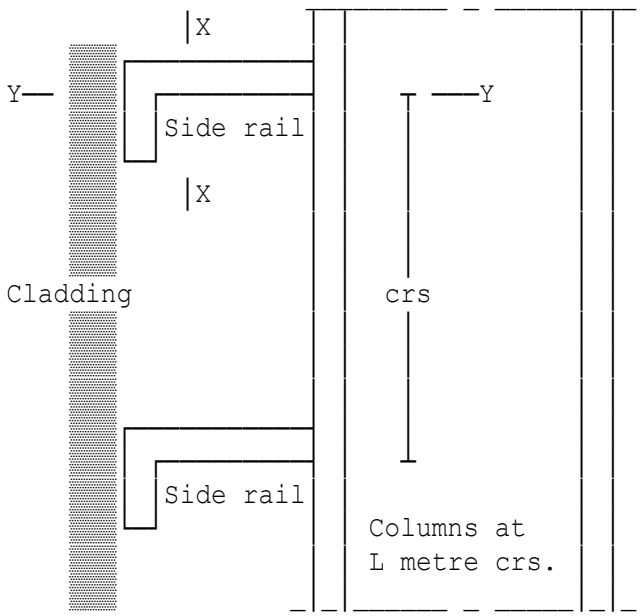

Side rail

Calculations are in accordance with BS5950-1: 2000 and follow Example 7 of 'Structural Steelwork Design' by L.J.Morris and D.R.Plum

X-X = major axis

Y-Y = minor axis

Side rail span	L=5 m
Side rail centres	crs=2 m
Characteristic wind load	ww=0.8 kN/m²
125 x 75 x 10 mm Unequal Angle.	
Young's Modulus	E=205 kN/mm²

Loading

Wind load	Ww=crs*L*ww=8 kN
Ultimate wind load	Wx=1.4*Ww=11.2 kN

Applied moment and shear

Max moment occurs at centre	Mx=Wx*L/8=7 kNm
Max shear occurs at ends	Fx=Wx/2=5.6 kN

Shear capacity

Shear area (bending about xx)	Avx=0.9*A*t=1125 mm²
Shear capacity	Pvx=0.6*py*Avx/1000=185.63 kN

Since Fx ≤ Pvx (5.6 kN ≤ 185.63 kN) shear force in web within shear capacity.

Moment capacity

Moment capacity	Mcx=py*Z/10^3=10.042 kNm

Since Mx ≤ Mcx (7 kNm ≤ 10.042 kNm) section is satisfactory.

Check for deflection under serviceability loads

Total deflection DEL=5*Ww*L^3*10^5/(384*E*Ix)=21.032 mm
Limiting deflection DELlim=L*1000/200=25 mm
Since DEL ≤ DELlim (21.032 mm ≤ 25 mm) deflection within limiting value.

SIDE RAIL	**125 x 75 x 10 Angle Grade S 275**	
SECTION	**Shear force**	**5.6 kN**
SUMMARY	**Shear capacity**	**185.63 kN**
	Applied moment	**7 kNm**
	Moment capacity	**10.042 kNm**
	Deflection	**21.032 mm**
	Limiting deflection	**25 mm**

Location: Ex1 - Cladding side rail design

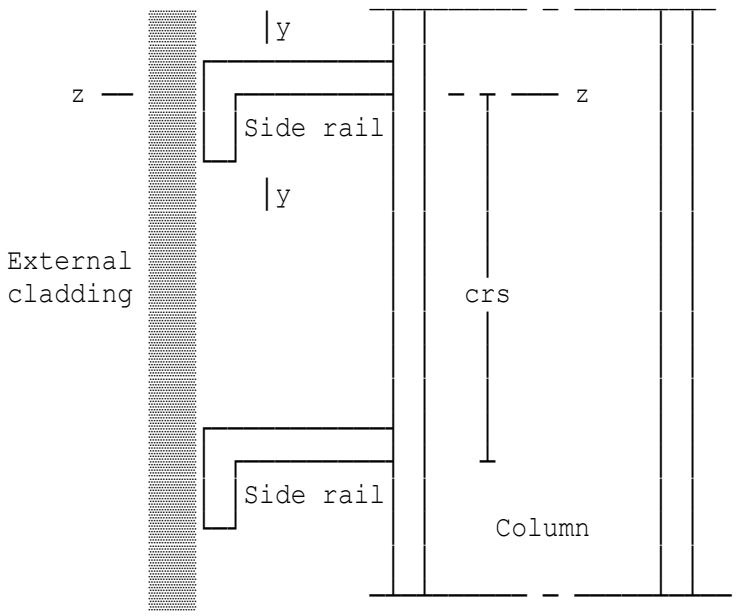

Cladding side rail

Calculations are in accordance with EC3 Part 1-1:2005

crs = rail centres

Y-Y = major axis

Z-Z = minor axis

L = column centres
= side rail span

Side rail span L=5 m
Side rail centres crs=2 m
Characteristic wind load wk=0.8 kN/m²
125 x 75 x 10 mm Unequal Angle (Advance UKA)

Partial factors for actions and resistance

Variable action (horizontal wind) gamQ=1.5
Partial factor gamM0=1.0
Partial factor gamM1=1.0

Design moment and shear

Max moment occurs at centre MyEd=Wy*L/8=7.5 kNm
Max shear occurs at ends VyEd=Wy/2=6 kN

Design shear resistance

Shear area (bending about y-axis) Av=0.9*h*t=1125 mm²
Shear resistance VplRdy=Av*(fy/3^0.5)/(gamM0*1000)
=178.62 kN
Since VyEd ≤ VplRdy (6 kN ≤ 178.62 kN) design shear force in web is within the shear resistance.

Moment resistance

Moment resistance McRdy=Wel*fy/(gamM0*10^3)=10.042 kNm
Since MyEd ≤ McRdy (7.5 kNm ≤ 10.042 kNm) section is satisfactory.

Check for deflection under serviceability loads

Total deflection DEL=5*Wk*L^3*10^8/(384*E*Iy)=20.531 mm
Since DEL ≤ DELlim (20.531 mm ≤ 25 mm) deflection OK.

SIDE RAIL	**125 x 75 x 10 Angle Grade S 275**	
DESIGN	**Design shear force**	**6 kN**
SUMMARY	**Shear resistance**	**178.62 kN**
	Design moment	**7.5 kNm**
	Moment resistance	**10.042 kNm**
	Deflection	**20.531 mm**
	Limiting deflection	**25 mm**

Location: Example 2, 'Steel Designer's Manual' - with restraint

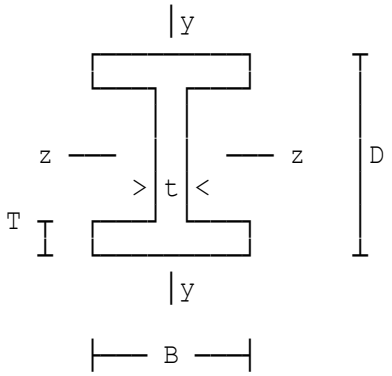

I Section Column

Calculations in accordance with BS5950-1:2000 Sections 4.7 and 4.8.

All loads and moments are factored.

Design moment about z-z axis	Mz=530 kNm
Design shear force	Fv=95 kN
Design axial load (+ve comp)	F=160 kN
Length of member	L=5.6 m
Design moment about minor axis	My=0 kNm
Design shear force // flanges	Fvz=0 kN

533 x 210 x 82 UB.

Young's Modulus	E=205 kN/mm²
Length between restraints z-axis	Lz=5600 mm
Length between restraints y-axis	Ly=1600 mm
Length between restraints	LT=1.6 m
Maximum moment on segment	MLT=530 kNm
Far end BM	betaM=378.6 kNm
Maximum moment on segment	Mz'=530 kNm
Far end BM	betaMz=0 kNm

UNIVERSAL BEAM SECTION SUMMARY	**533 x 210 x 82 UB Grade S 355**	
	Section is satisfactory for bending, axial load, local capacity, and overall buckling check.	
DESIGN SUMMARY	**Axial load (+ve comp)**	**160 kN**
	Compressive resistance	**3402.2 kN**
	Maximum moment(z-axis)	**530 kNm**
	Moment resistance	**731.3 kNm**
	Local capacity check	**0.76766 ≤ 1**
	Overall buckling check	**0.48843 ≤ 1**
		0.6948 ≤ 1

Location: Ex2 As Ex1 but with reduced axial load - no restraint

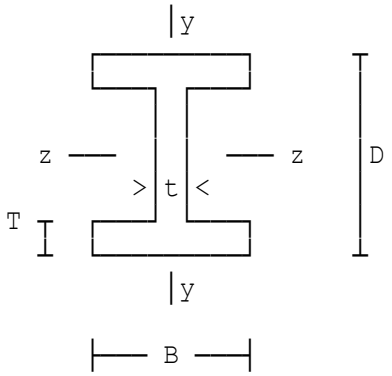

I Section Column

Calculations in accordance with BS5950-1:2000 Sections 4.7 and 4.8.

All loads and moments are factored.

Design moment about z-z axis	Mz=400 kNm
Design shear force	Fv=95 kN
Design axial load (+ve comp)	F=160 kN
Length of member	L=5.6 m
Design moment about minor axis	My=0 kNm
Design shear force // flanges	Fvz=0 kN

533 x 210 x 82 UB.

Young's Modulus	E=205 kN/mm²
Length between restraints z-axis	Lz=5600 mm
Length between restraints y-axis	Ly=5600 mm
Length between restraints	LT=5.6 m
Maximum moment on segment	MLT=400 kNm
Far end BM	betaM=0 kNm
Maximum moment on segment	Mz'=530 kNm
Far end BM	betaMz=0 kNm

UNIVERSAL BEAM	**533 x 210 x 82 UB Grade S 355**	
SECTION	**Section is satisfactory for bending,**	
SUMMARY	**axial load, local capacity, and**	
	overall buckling check.	
DESIGN	**Axial load (+ve comp)**	**160 kN**
SUMMARY	**Compressive resistance**	**1086.1 kN**
	Maximum moment(z-axis)	**400 kNm**
	Moment resistance	**731.3 kNm**
	Local capacity check	**0.5899 ≤ 1**
	Overall buckling check	**0.37942 ≤ 1**
		0.99052 ≤ 1

Location: Semi-compact section

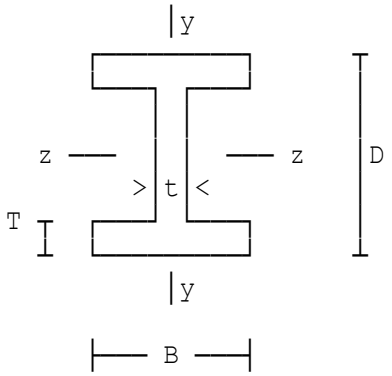

I Section Column

Calculations in accordance with BS5950-1:2000 Sections 4.7 and 4.8.

All loads and moments are factored.

Design moment about z-z axis	Mz=45 kNm
Design shear force	Fv=23 kN
Design axial load (+ve comp)	F=525 kN
Length of member	L=5 m
Design moment about minor axis	My=0 kNm
Design shear force // flanges	Fvz=0 kN

406 x 140 x 39 UB.

Young's Modulus	E=205 kN/mm²
Length between restraints z-axis	Lz=5000 mm
Length between restraints y-axis	Ly=2500 mm
Length between restraints	LT=2.5 m
Maximum moment on segment	MLT=45 kNm
Far end BM	betaM=22.5 kNm
Maximum moment on segment	Mz'=45 kNm
Far end BM	betaMz=0 kNm

UNIVERSAL BEAM SECTION SUMMARY	**406 x 140 x 39 UB Grade S 275**	
	Section is satisfactory for bending, axial load, local capacity, and overall buckling check.	
DESIGN SUMMARY	**Axial load (+ve comp)**	**525 kN**
	Compressive resistance	**828.12 kN**
	Maximum moment(z-axis)	**45 kNm**
	Moment resistance	**181.81 kNm**
	Local capacity check	**0.63163 ≤ 1**
	Overall buckling check	**0.57479 ≤ 1**
		0.91792 ≤ 1

Location: Biaxial bending

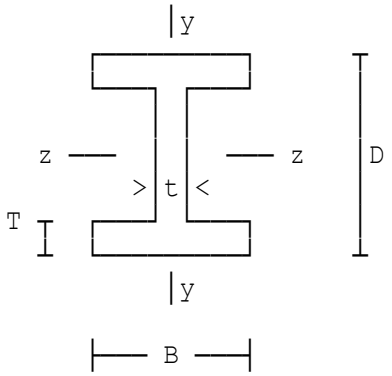

I Section Column

Calculations in accordance with BS5950-1:2000 Sections 4.7 and 4.8.

All loads and moments are factored.

Design moment about z-z axis	Mz=230 kNm
Design shear force	Fv=65 kN
Design axial load (+ve comp)	F=1500 kN
Length of member	L=4.3 m
Design moment about minor axis	My=87 kNm
Design shear force // flanges	Fvz=0 kN

305 x 305 x 118 UC.

Young's Modulus	E=205 kN/mm²
Length between restraints z-axis	Lz=4300 mm
Length between restraints y-axis	Ly=4300 mm
Length between restraints	LT=4.3 m
Maximum moment on segment	MLT=230 kNm
Far end BM	betaM=-100 kNm
Maximum moment on segment	Mz'=230 kNm
Far end BM	betaMz=-100 kNm
Maximum moment on segment	My'=87 kNm
Far end BM	betaMy=23 kNm
Maximum moment on segment	Mmaxy=87 kNm
Far end BM	betay=23 kNm

UNIVERSAL COLUMN SECTION SUMMARY	**305 x 305 x 118 UC Grade S 355 Section is satisfactory for bending, axial load, local capacity, and overall buckling check.**	
DESIGN SUMMARY	**Axial load (+ve comp)**	**1500 kN**
	Compressive resistance	**4442 kN**
	Maximum moment(z-axis)	**230 kNm**
	Moment resistance	**676.2 kNm**
	Maximum moment(y-axis)	**87 kNm**
	Moment resistance	**305.05 kNm**
	Local capacity check	**0.91519 ≤ 1**
	Overall buckling check	**0.5985 < 1**
		0.77781 ≤ 1
		0.69183 ≤ 1

Location: Example 2, 'Steel Designer's Manual' - fire check

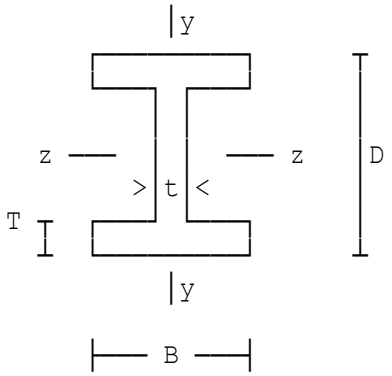

I Section Column

Calculations in accordance with BS5950-1:2000 Sections 4.7 and 4.8.

All loads and moments are factored.

Design moment about z-z axis	Mz=530 kNm
Design shear force	Fv=95 kN
Design axial load (+ve comp)	F=160 kN
Length of member	L=5.6 m
Design moment about minor axis	My=0 kNm
Design shear force // flanges	Fvz=0 kN

533 x 210 x 82 UB.

Young's Modulus	E=205 kN/mm²
Length between restraints z-axis	Lz=5600 mm
Length between restraints y-axis	Ly=1600 mm
Length between restraints	LT=1.6 m
Maximum moment on segment	MLT=530 kNm
Far end BM	betaM=378.6 kNm
Maximum moment on segment	Mz'=530 kNm
Far end BM	betaMz=0 kNm
values to applied factored values	Rf=0.6

UNIVERSAL BEAM	**533 x 210 x 82 UB Grade S 355**	
SECTION	**Section is satisfactory for bending,**	
SUMMARY	**axial load, local capacity, and**	
	overall buckling check.	
DESIGN	**Axial load (+ve comp)**	**160 kN**
SUMMARY	**Compressive resistance**	**3402.2 kN**
	Maximum moment(z-axis)	**530 kNm**
	Moment resistance	**731.3 kNm**
	Local capacity check	**0.76766 ≤ 1**
	Overall buckling check	**0.48843 ≤ 1**
		0.6948 ≤ 1

FIRE RESISTANCE SUMMARY

Exposed surface area	**1872.6 mm²**
Area of section	**105 cm²**
Section factor	**175 /m**
Load Ratio (R)	**0.4606**

Section does not have an inherent fire resistance of 30 minutes.
Fire protection should be provided.

Location: Ex1 - SCI example

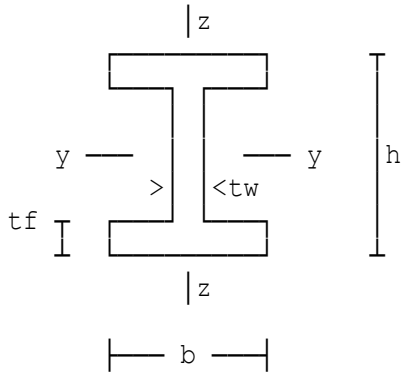

I Section Column

Calculations in accordance with BS EN 1993-1-1:2005. Internal forces and moments have been determined by elastic global analysis.

All forces and moments are factored.

Design moment about major axis	MyEd=30 kNm
Design shear force	VzEd=10 kN
Design axial load (+ve comp)	NEd=590 kN
Length of member	L=5 m
Moment about the minor axis	MzEd=1 kNm
Design shear force // to flanges	VyEd=0.6 kN

203 x 203 x 46 UKC
Dimensions (mm): h=203.2 b=203.6 tw=7.2 tf=11 r=10.2
Properties (cm): Iy=4570 Iz=1550 Wply=497 Wplz=231 It=22.2

Effective length parameter	K=1
Length for LTB	LT=5 m
Maximum moment on section	M=30 kNm
Far end moment	psiM=0 kNm
Far end bending moment	pM(1)=0 kNm
Far end bending moment	pM(2)=0 kNm
Far end bending moment	pM(3)=0 kNm

UNIVERSAL COLUMN	**203 x 203 x 46 UKC Grade**	**S 275**
DESIGN	**Design BM y-y axis**	**30 kNm**
SUMMARY	**Moment resistance (y-y)**	**136.68 kNm**
	Design BM z-z axis	**1 kNm**
	Moment resistance (z-z)	**63.525 kNm**
	Design compression load	**590 kN**
	Axial resistance	**1614.3 kN**
	Interaction factors	**0.62179 ≤ 1**
		0.96296 ≤ 1

Location: Ex2 - Moment about major axis and load

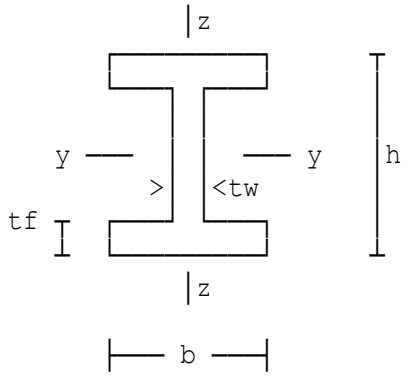

I Section Column

Calculations in accordance with BS EN 1993-1-1:2005. Internal forces and moments have been determined by elastic global analysis.

All forces and moments are factored.

Design moment about major axis	MyEd=60 kNm
Design shear force	VzEd=30 kN
Design axial load (+ve comp)	NEd=600 kN
Length of member	L=6 m
Moment about the minor axis	MzEd=0 kNm
Design shear force // to flanges	VyEd=0 kN

254 x 254 x 89 UKC
Dimensions (mm): h=260.3 b=256.3 tw=10.3 tf=17.3 r=12.7
Properties (cm): Iy=14300 Iz=4860 Wply=1220 Wplz=575 It=102

Effective length parameter	K=1
Length for LTB	LT=6 m
Maximum moment on section	M=60 kNm
Far end moment	psiM=-30 kNm
Far end bending moment	pM(1)=-30 kNm
Far end bending moment	pM(3)=-30 kNm

UNIVERSAL COLUMN	**254 x 254 x 89 UKC Grade**	**S 275**
DESIGN	**Design BM y-y axis**	**60 kNm**
SUMMARY	**Moment resistance (y-y)**	**323.3 kNm**
	Design compression load	**600 kN**
	Axial resistance	**2994.5 kN**
	Interaction factors	**0.32123 ≤ 1**
		0.52312 ≤ 1

Location: Ex3 - Moment about minor axis and load

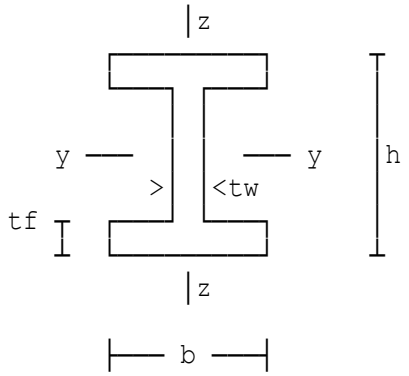

I Section Column

Calculations in accordance with BS EN 1993-1-1:2005. Internal forces and moments have been determined by elastic global analysis.

All forces and moments are factored.

Design moment about major axis	MyEd=0 kNm
Design shear force	VzEd=0 kN
Design axial load (+ve comp)	NEd=800 kN
Length of member	L=6 m
Moment about the minor axis	MzEd=30 kNm
Design shear force // to flanges	VyEd=16 kN

254 x 254 x 89 UKC
Dimensions (mm): h=260.3 b=256.3 tw=10.3 tf=17.3 r=12.7
Properties (cm): Iy=14300 Iz=4860 Wply=1220 Wplz=575 It=102
Far end bending moment pM(2)=0 kNm

UNIVERSAL COLUMN	**254 x 254 x 89 UKC Grade**	**S 275**
DESIGN	**Design BM y-y axis**	**0 kNm**
SUMMARY	**Moment resistance (y-y)**	**323.3 kNm**
	Design BM z-z axis	**30 kNm**
	Moment resistance (z-z)	**152.38 kNm**
	Design compression load	**800 kN**
	Axial resistance	**2994.5 kN**
	Interaction factors	**0.4416 ≤ 1**
		0.71666 ≤ 1

Location: Ex4 - Tensile load and moments

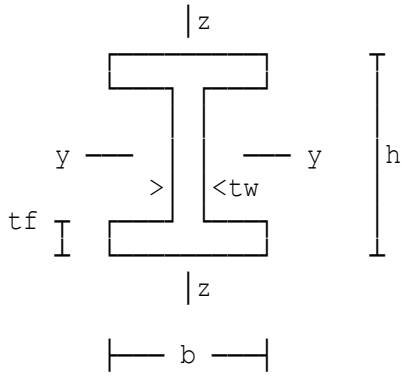

I Section Column

Calculations in accordance with BS EN 1993-1-1:2005. Internal forces and moments have been determined by elastic global analysis.

All forces and moments are factored.

Design moment about major axis	MyEd=60 kNm
Design shear force	VzEd=30 kN
Design axial load (+ve comp)	NEd=-1000 kN
Length of member	L=6 m
Moment about the minor axis	MzEd=30 kNm
Design shear force // to flanges	VyEd=16 kN

254 x 254 x 89 UKC
Dimensions (mm): h=260.3 b=256.3 tw=10.3 tf=17.3 r=12.7
Properties (cm): Iy=14300 Iz=4860 Wply=1220 Wplz=575 It=102

Effective length parameter	K=1
Length for LTB	LT=6 m
Maximum moment on section	M=60 kNm
Far end moment	psiM=0 kNm

UNIVERSAL COLUMN	**254 x 254 x 89 UKC Grade**	**S 275**
DESIGN	**Design BM y-y axis**	**60 kNm**
SUMMARY	**Moment resistance (y-y)**	**323.3 kNm**
	Design BM z-z axis	**30 kNm**
	Moment resistance (z-z)	**152.38 kNm**
	Design tensile load	**1000 kN**
	Axial resistance	**2994.5 kN**
	Interaction factors	**0.71641 ≤ 1**

Location: Ex5 - Class 4 section

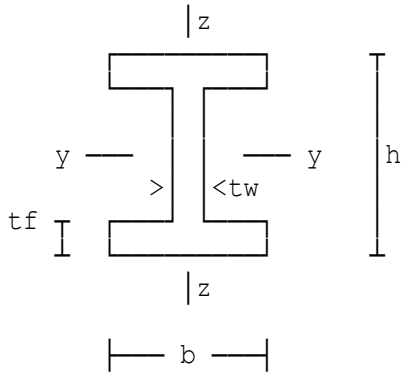

I Section Column

Calculations in accordance with BS EN 1993-1-1:2005. Internal forces and moments have been determined by elastic global analysis.

All forces and moments are factored.

Design moment about major axis	MyEd=30 kNm
Design shear force	VzEd=30 kN
Design axial load (+ve comp)	NEd=7000 kN
Length of member	L=5 m
Moment about the minor axis	MzEd=0 kNm
Design shear force // to flanges	VyEd=0.6 kN

1016 x 305 x 222 UKB
Dimensions (mm): h=970.3 b=300 tw=16 tf=21.1 r=30
Properties (cm): Iy=408000 Iz=9550 Wply=9810 Wplz=1020 It=390

Determine the effective section properties - EN 1992-1-5, Cl. 4.4

The process is iterative as the amount of web not considered is a function of the stresses at the top and bottom of the web.

Iteration 1:

Gross area of section	A=2*b*tf+hw*tw=27510 mm²
Gross 2nd moment of area	Iy=(b*(hw+2*tf)^3-(b-tw)*hw^3)/12 =3.918E9 mm⁴
Stress at top of web	s1=MyEd*10^6*hw/2/Iy=3.5532 N/mm²
Stress at bottom of web	s2=-MyEd*10^6*hw/2/Iy=-3.5532 N/mm²

Iteration 10 :
Position of effective centroid:
zeff=(A*h/2-Aw*(zeffp+be2+lw/2))/Aeff=485.15 mm
Effective 2nd moment of area:
Iyeff=Iy+A*(h/2-zeff)^2-tw*lw^3/12-Aw*(zeffp+be2+lw/2-zeff)^2
=3.918E9 mm⁴

Top of web stress	s1(10)=MyEd*10^6*(h-tf-zeff)/Iyeff =3.5532 N/mm²
Bottom of web stress	s2(10)=-MyEd*10^6*(zeff-tf)/Iyeff =-3.5532 N/mm²
Net loss area	Aw=lw*tw=0 mm²
Effective area of section	Aeff=A-Aw=27510 mm²
Effective section modulus	Weffy=Iyeff/(1000*(h-zeff))=8075.8 cm³

Effective length parameter	K=1
Length for LTB	LT=5 m
Maximum moment on section	M=30 kNm
Far end moment	psiM=0 kNm
Far end bending moment	pM(1)=0 kNm
Far end bending moment	pM(3)=0 kNm

UNIVERSAL BEAM	**1016 x 305 x 222 UKB Grade S 275**	
DESIGN	**Design BM y-y axis**	**30 kNm**
SUMMARY	**Moment resistance (y-y)**	**2140.1 kNm**
	Design compression load	**7000 kN**
	Axial resistance	**729004 kN**
	Interaction factors	**0.018014 ≤ 1**
		0.92731 ≤ 1

Location: Ex1 - Channel Section Design

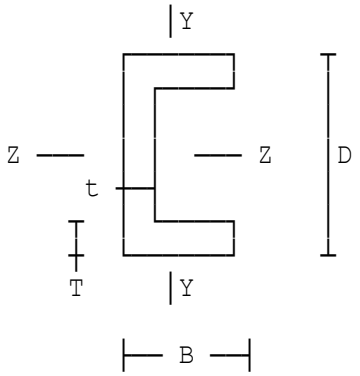

Channel Section Design

Calculations in accordance with BS5950-1:2000.

All forces and moments are factored.

Design moment about z-z axis	Mz=250 kNm
Design shear force	Fv=95 kN
Design axial load (+ve comp)	F=160 kN
Length of member	L=5 m
Design moment about minor axis	My=1 kNm
Design shear force // to flanges	Fvz=5 kN

380 x 100 Parallel Flange Channel.

Young's Modulus	E=205 kN/mm²
Length between restraints z-axis	Lz=5000 mm
Length between restraints y-axis	Ly=1500 mm
Length between restraints	LT=1.5 m
Maximum moment on segment	MLT=250 kNm

Member buckling resistance

Overall buckling check - Clause 4.8.3.3.2

For members with moments about both axes the major axis in-plane buckling is as follows:

$$\frac{F}{Pcz} + \frac{mz.Mz}{Mcz}\left[1 + 0.5\frac{F}{Pcz}\right] + 0.5\frac{myz.My}{Mcy} \leq 1.0$$

Unity relationship:

unity=F/Pcz+mz*Mz/Mcz*(1+0.5*F/Pcz)+0.5*(myz*My/Mcy)
=0.89278

Hence, the unity relationship is satisfied.
For lateral torsional buckling:

$$\frac{F}{Pcy} + \frac{mLT.MLT}{Mb} + \frac{my.My}{Mcy}\left[1 + \frac{F}{Pcy}\right] \leq 1.0$$

Unity relationship ufy=F/Pcy+mLT*MLT/Mb+my*My/Mcy*(1+F/Pcy)=0.98062

Hence, the unity relationship is satisfied.

For interactive buckling:

$$\frac{mz.Mz(1+0.5F/Pcz)}{Mcz(1-F/Pcz)} + \frac{my.My(1+F/Pcy)}{Mcy(1-F/Pcy)} \leq 1.0$$

Unity relationship z term uz=mz*Mz*(1+0.5*F/Pcz)/(Mcz*(1-F/Pcz))=0.87227

Unity relationship y term uy=my*My*(1+F/Pcy)/(Mcy*(1-F/Pcy))=0.025738

Unity relationship Unb=uz+uy=0.898

Hence, the unity relationship is satisfied.

PARALLEL FLANGE CHANNEL	**380 x 100 Grade S 355**	
SECTION	**Section is satisfactory for bending,**	
SUMMARY	**axial load, local capacity, and**	
	overall buckling check.	
DESIGN	**Axial load (+ve comp)**	**160 kN**
SUMMARY	**Compressive resistance**	**1861.2 kN**
	Maximum moment(z-axis)	**250 kNm**
	Moment resistance	**321.89 kNm**
	Maximum moment(y-axis)	**1 kNm**
	Moment resistance	**46.161 kNm**
	Local capacity check	**0.86584 ≤ 1**
	Overall buckling check	**0.89278 < 1**
		0.98062 ≤ 1
		0.898 ≤ 1

Location: Ex1 - Channel Section Design

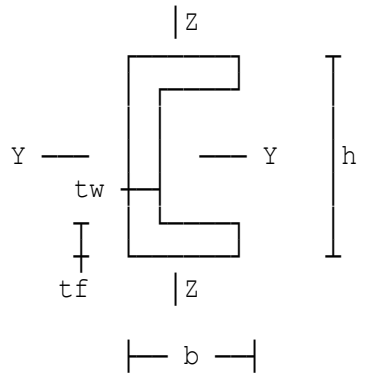

Channel Section Design

Calculations in accordance with BS EN 1993-1-1:2005. Internal forces and moments have been determined by elastic global analysis.

All forces and moments are factored.

Design moment about major axis MyEd=30 kNm
Design shear force VzEd=10 kN
Design axial load (+ve comp) NEd=300 kN
Length of member L=5 m
Moment about the minor axis MzEd=1 kNm
Design shear force // to flanges VyEd=0.6 kN
380 x 100 UKPFC
Dimensions (mm): h=380 b=100 tw=9.5 tf=17.5 r=15
Properties (cm): Iy=15000 Iz=643 Wply=933 Wplz=161 It=45.7
A=68.7 Cy=2.7915 Iw=0.15 iy=14.776 iz=3.0593
Wely=789.47 Welz=89.2
Unity expression unity=(MyEd/MyNRd)^ap+(MzEd /MzNRd)^bp=0.038161
Section is suitable for the combination of bending and axial force.
Effective length parameter K=1
Length for LTB LT=5 m
Maximum moment on section M=30 kNm
Far end moment psiM=0 kNm
Far end bending moment pM(1)=0 kNm
Far end bending moment pM(2)=0 kNm
Far end bending moment pM(3)=0 kNm

Interaction equations

$$\frac{NEd}{\chi y.NRd} + kyy\frac{MyEd}{\chi LT.MyRd} + kyz\frac{MzEd}{MzRd} \leq 1$$

Unity factor Unity1=NEd/(chiy*NRd)+kyy*MyEd/(ChiLT*MyRd)+kyz*MzEd/MzRd =0.34243
Hence, section chosen is suitable.

$$\frac{NEd}{\chi z.NRd} + kzy\frac{MyEd}{\chi LT.MyRd} + kzz\frac{MzEd}{MzRd} \leq 1$$

Unity factor Unity2=NEd/(chiz*NRd)+kzy*MyEd'/(ChiLT*MyRd)+kzz*MzEd /MzRd=0.9681
Hence, section chosen is suitable.

CHANNEL	**380 x 100 UKPFC**	
SECTION	**Parallel flange Channel Grade S 275**	
DESIGN	**Design BM y-y axis**	**30 kNm**
SUMMARY	**Moment resistance (y-y)**	**247.25 kNm**
	Design BM z-z axis	**1 kNm**
	Moment resistance (z-z)	**42.665 kNm**
	Design compression load	**300 kN**
	Axial resistance	**1820.6 kN**
	Design buckling resist.	**408.53 kN**
	Interaction factors	**0.34243 ≤ 1**
		0.9681 ≤ 1

Location: Example 8.7.2 'Structural Steelwork'

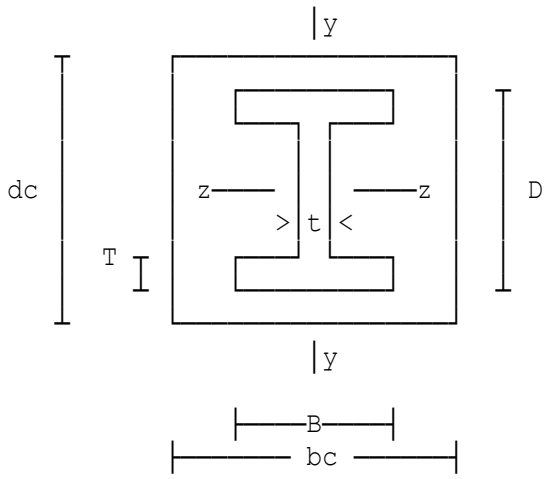

Cased I Section Column

Calculations in accordance with BS5950-1:2000 Sections 4.7, 4.8 and 4.14

All loads and moments are factored.

Design moment about z-z axis	Mz=85 kNm
Design shear force	Fv=0 kN
Design axial load (+ve comp)	F=1200 kN
Length of member	L=7 m
Factored moment about minor axis	My=0 kNm

203 x 203 x 86 UC.

Depth of concrete section	dc=325 mm
Width of concrete section	bc=325 mm
Compressive strength of concrete	fcu=30 N/mm²
Modular ratio	Alphae=10
Young's Modulus	E=205 kN/mm²

Length between restraints z axis	Lz=7000 mm
Length between restraints y axis	Ly=7000 mm
Length between restraints	LT=7 m
Maximum moment on segment	MLT=85 kNm
Far end BM	betaM=-51 kNm
Maximum moment on segment	Mz'=85 kNm
Far end BM	betaMz=-51 kNm

UNIVERSAL COLUMN	**203 x 203 x 86 UC Grade S 275**	
DESIGN SUMMARY	**Axial load**	**1200 kN**
	Compressive resistance	**2162.4 kN**
	Moment (z-z axis)	**85 kNm**
	Moment capacity	**258.9 kNm**
	Local capacity check	**0.65937 < 1**
	Buckling resistance	**230.5 kNm**
	Overall buckling check	**0.70335 < 1**
		0.96037 < 1
CASED SECTION	**Cube strength of concrete**	**30 N/mm²**
DETAILS	**Cased section dimensions**	
	325 mm x 325 mm	
STEEL	**Fabric to comply with BS 4483,**	
FABRIC	**reference D98 (5 mm dia. wire at**	
	maximum spacing of 200 mm)	

Location: Ex1 - Cased I-Section column (uni-axial bending)

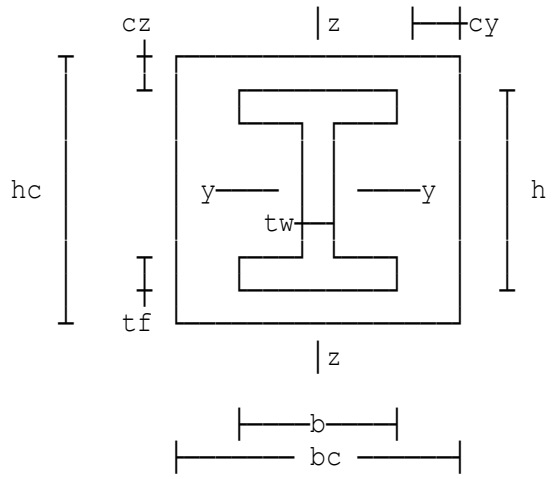

Cased I-Section column

Calculations in accordance with BS EN 1994-1-1:2004 and BS EN 1993-1-1:2005.

All loads and moments are factored.

Design moment about major axis	MyEd=85 kNm
Design shear force	VzEd=13 kN
Design axial load (+ve comp)	NEd=1200 kN
Length of member	L=7 m
Maximum BM about the minor axis	MzEd=0 kNm

203 x 203 x 86 UKC

Permanent design load	NgEd=800
Depth of concrete section	hc=325 mm
Width of concrete section	bc=325 mm
Length btwn restraints yy axis	Ly=7 m
Length btwn restraints zz axis	Lz=7 m
Effective length factor y-y axis	Ky=0.85
Effective length factor z-z axis	Kz=0.85
Far end BM	MyEd1=0 kNm

UNIVERSAL COLUMN	**203 x 203 x 86 UKC Grade S 275**
DESIGN SUMMARY	**Design axial load 1200 kN**
	Design moment y-y axis 121.93 kNm
	Moment capacity y-y axis 308.69 kNm
CASED SECTION DETAILS	**Compress.strength class C 25 /30**
	Cased section dimensions
	325 mm x 325 mm
Reinforcement	**The resistance of the cross-section was evaluated without taking into consideration the contribution of any reinforcement. For fully encased members any longitudinal & transverse reinforcement that is to be provided needs to be in accordance with EC4 Part 1-1, Clause 6.7.5.2.**

Location: Ex2 - Axial load only

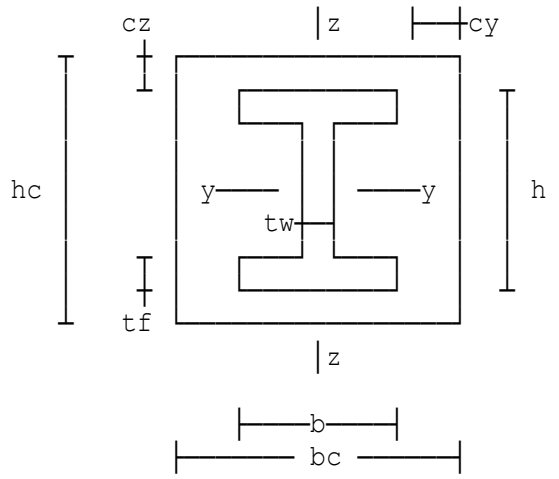

Cased I-Section column

Calculations in accordance with BS EN 1994-1-1:2004 and BS EN 1993-1-1:2005.

All loads and moments are factored.

Design moment about major axis	MyEd=0 kNm
Design shear force	VzEd=0 kN
Design axial load (+ve comp)	NEd=1800 kN
Length of member	L=7 m
Maximum BM about the minor axis	MzEd=0 kNm

254 x 254 x 89 UKC

Permanent design load	NgEd=1200
Depth of concrete section	hc=400 mm
Width of concrete section	bc=400 mm
Length btwn restraints yy axis	Ly=7 m
Length btwn restraints zz axis	Lz=7 m
Effective length factor y-y axis	Ky=1
Effective length factor z-z axis	Kz=1

UNIVERSAL COLUMN	**254 x 254 x 89 UKC Grade S 355**
DESIGN SUMMARY	**Design axial load 1800 kN**
	Column axial resistance 2584.9 kN
CASED SECTION DETAILS	**Compress.strength class C 25 /30**
	Cased section dimensions
	400 mm x 400 mm
Reinforcement	**The resistance of the cross-section was evaluated without taking into consideration the contribution of any reinforcement. For fully encased members any longitudinal & transverse reinforcement that is to be provided needs to be in accordance with EC4 Part 1-1, Clause 6.7.5.2.**

Location: Ex3 - Uni-axial bending case (see Thomas Telford publ.)

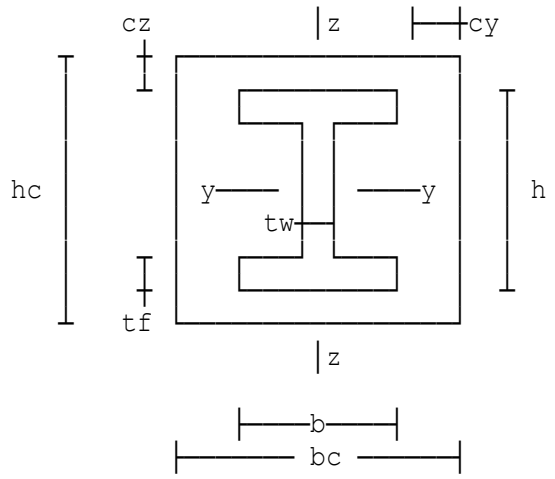

Cased I-Section column

Calculations in accordance with BS EN 1994-1-1:2004 and BS EN 1993-1-1:2005.

All loads and moments are factored.

Design moment about major axis	MyEd=380 kNm
Design shear force	VzEd=54 kN
Design axial load (+ve comp)	NEd=1800 kN
Length of member	L=7 m
Maximum BM about the minor axis	MzEd=0 kNm

254 x 254 x 89 UKC

Permanent design load	NgEd=1200
Depth of concrete section	hc=400 mm
Width of concrete section	bc=400 mm
Length btwn restraints yy axis	Ly=7 m
Length btwn restraints zz axis	Lz=7 m
Effective length factor y-y axis	Ky=1
Effective length factor z-z axis	Kz=1
Far end BM	MyEd1=0 kNm

UNIVERSAL COLUMN	**254 x 254 x 89 UKC Grade S 355**
DESIGN SUMMARY	**Design axial load 1800 kN**
	Design moment y-y axis 413.93 kNm
	Moment capacity y-y axis 518.52 kNm
CASED SECTION DETAILS	**Compress.strength class C 25 /30**
	Cased section dimensions
	400 mm x 400 mm
Reinforcement	**The resistance of the cross-section was evaluated without taking into consideration the contribution of any reinforcement. For fully encased members any longitudinal & transverse reinforcement that is to be provided needs to be in accordance with EC4 Part 1-1, Clause 6.7.5.2.**

Location: Ex4 - Biaxial bending case (see Thomas Telford publ.)

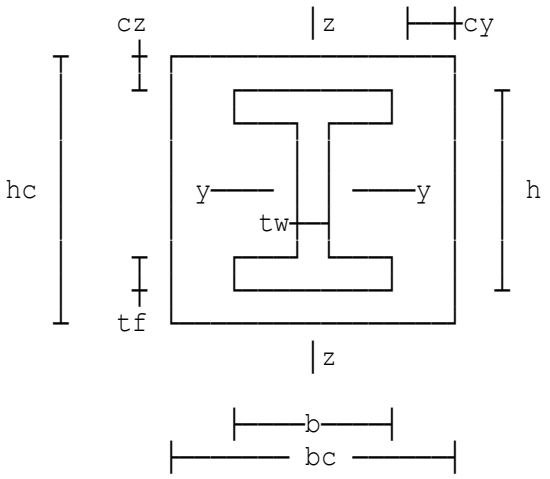

Cased I-Section column

Calculations in accordance with BS EN 1994-1-1:2004 and BS EN 1993-1-1:2005.

All loads and moments are factored.

Design moment about major axis	MyEd=380 kNm
Design shear force	VzEd=54 kN
Design axial load (+ve comp)	NEd=1800 kN
Length of member	L=7 m
Maximum BM about the minor axis	MzEd=50 kNm

254 x 254 x 89 UKC

Permanent design load	NgEd=1200
Depth of concrete section	hc=400 mm
Width of concrete section	bc=400 mm
Length btwn restraints yy axis	Ly=7 m
Length btwn restraints zz axis	Lz=7 m
Effective length factor y-y axis	Ky=1
Effective length factor z-z axis	Kz=1
Far end BM	MyEd1=0 kNm
Far end BM	MzEd1=0 kNm

UNIVERSAL COLUMN	**254 x 254 x 89 UKC Grade**	**S 355**
DESIGN SUMMARY	**Design axial load**	**1800 kN**
	Design moment y-y axis	**380 kNm**
	Moment capacity y-y axis	**518.52 kNm**
	Design moment z-z axis	**50 kNm**
	Moment capacity z-z axis	**325.01 kNm**
	Interaction factors	**0.98514 ≤ 1**
CASED SECTION DETAILS	**Compress.strength class**	**C 25 /30**
	Cased section dimensions	
	400 mm x 400 mm	
Reinforcement	**The resistance of the cross-section was evaluated without taking into consideration the contribution of any reinforcement. For fully encased members any longitudinal & transverse reinforcement that is to be provided needs to be in accordance with EC4 Part 1-1, Clause 6.7.5.2.**	

Location: Example 2, 'Steel Designer's Manual' - with restraint

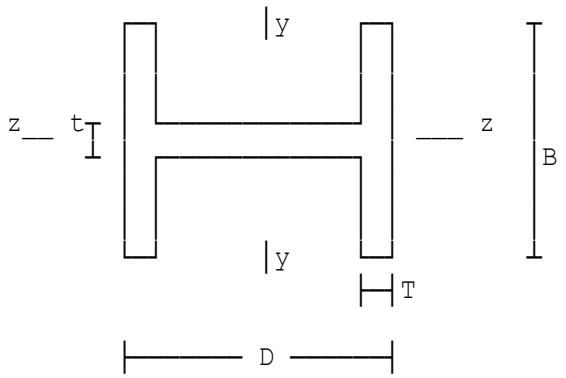

H Section Column

Calculations in accordance with BS5950-1:2000 Sections 4.7 and 4.8.

All loads and moments are factored.
Axis references are GLOBAL.

Design moment about y-y axis	My=530 kNm
Design shear force	Fy=0 kN
Design axial load (+ve comp)	F=160 kN
Length of member	L=5.6 m
Factored moment about z-z axis	Mz=0 kNm
Accompanying shear force	Fv=95 kN

533 x 210 x 82 UB.

Young's Modulus	E=205 kN/mm²

Length between restraints z axis	Lz=1600 mm
Length between restraints y axis	Ly=5600 mm
Length between restraints	LT=1.6 m
Maximum moment on segment	MLT=530 kNm
Far end BM	betaM=378 kNm
Maximum moment on segment	My'=530 kNm
Far end BM	betaMy=0 kNm

UNIVERSAL BEAM SECTION SUMMARY	**533 x 210 x 82 UB Grade S 355**	
	Section is satisfactory for bending, axial load, local capacity, and overall buckling check.	
DESIGN SUMMARY	**Axial load (+ comp.)**	**160 kN**
	Compressive resistance	**3402.2 kN**
	Maximum moment(y-axis)	**530 kNm**
	Moment capacity	**731.3 kNm**
	Local capacity check	**0.76766 ≤ 1**
	Overall buckling check	**0.48843 ≤ 1**
		0.69447 ≤ 1

Location: Moment about z-z axis only

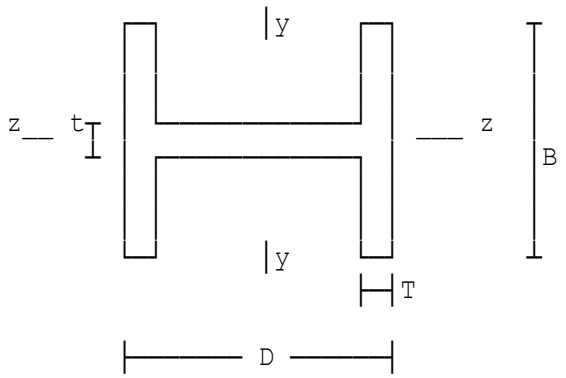

H Section Column

Calculations in accordance with BS5950-1:2000 Sections 4.7 and 4.8.

All loads and moments are factored.
Axis references are GLOBAL.

Design moment about y-y axis	My=0 kNm
Design shear force	Fy=0 kN
Design axial load (+ve comp)	F=470 kN
Length of member	L=5.6 m
Factored moment about z-z axis	Mz=48 kNm
Accompanying shear force	Fv=65 kN

203 x 203 x 86 UC.

Young's Modulus	E=205 kN/mm²
Length between restraints z axis	Lz=5600 mm
Length between restraints y axis	Ly=5600 mm
Maximum moment on segment	Mz'=48 kNm
Far end BM	betaMz=0 kNm
Maximum moment on segment	Mmaxy=48 kNm
Far end BM	betay=0 kNm

UNIVERSAL COLUMN SECTION SUMMARY	**203 x 203 x 86 UC Grade S 275**	
	Section is satisfactory for bending, axial load, local capacity, and overall buckling check.	
DESIGN SUMMARY	**Axial load (+ comp.)**	**470 kN**
	Compressive resistance	**1269.5 kN**
	Maximum moment(z-axis)	**48 kNm**
	Moment capacity	**119 kNm**
	Local capacity check	**0.56459 ≤ 1**
	Overall buckling check	**0.70182 ≤ 1**
		0.3216 ≤ 1

Location: Semi-compact

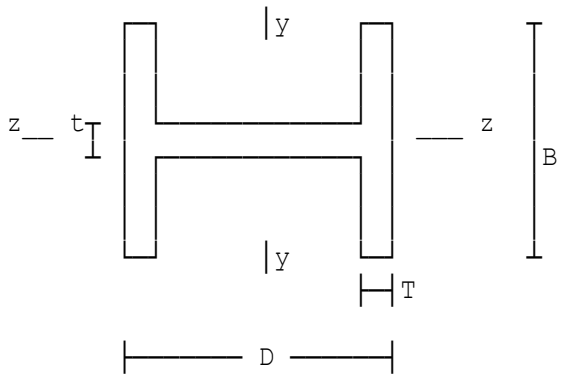

H Section Column

Calculations in accordance with BS5950-1:2000 Sections 4.7 and 4.8.

All loads and moments are factored.
Axis references are GLOBAL.

Design moment about y-y axis	My=0 kNm
Design shear force	Fy=0 kN
Design axial load (+ve comp)	F=500 kN
Length of member	L=2.8 m
Factored moment about z-z axis	Mz=12 kNm
Accompanying shear force	Fv=46 kN

406 x 140 x 39 UB.

Young's Modulus	E=205 kN/mm²
Length between restraints z axis	Lz=2800 mm
Length between restraints y axis	Ly=1400 mm
Maximum moment on segment	Mz'=12 kNm
Far end BM	betaMz=0 kNm
Maximum moment on segment	Mmaxy=12 kNm
Far end BM	betay=0 kNm

UNIVERSAL BEAM SECTION SUMMARY	**406 x 140 x 39 UB Grade S 355**	
	Section is satisfactory for bending, axial load, local capacity, and overall buckling check.	
DESIGN SUMMARY	**Axial load (+ comp.)**	**500 kN**
	Compressive resistance	**803.15 kN**
	Maximum moment(z-axis)	**12 kNm**
	Moment capacity	**32.234 kNm**
	Local capacity check	**0.65567 ≤ 1**
	Overall buckling check	**0.98497 ≤ 1**
		0.39507 ≤ 1

Location: SCI example

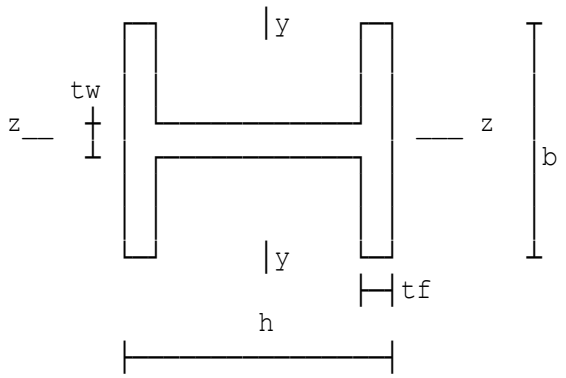

H Section Column

Calculations in accordance with BS EN 1993-1-1:2005. Internal forces and moments have been determined by elastic global analysis. factored.
All forces and moments are factored.

Design moment about minor axis	MzEd=1 kNm
Design shear force	VyEd=0.6 kN
Design axial load (+ve comp)	NEd=590 kN
Length of member	L=5 m
Moment about the y-y axis	MyEd=30 kNm
Accompanying shear force	VzEd=10 kN

203 x 203 x 46 UKC
Dimensions (mm): h=203.2 b=203.6 tw=7.2 tf=11 r=10.2
Properties (cm): Iy=4570 Iz=1550 Wply=497 Wplz=231 It=22.2

Effective length parameter	K=1
Length for LTB	LT=5 m
Maximum moment on section	M=30 kNm
Far end moment	psiM=0 kNm
Far end bending moment	pM(1)=0 kNm
Far end bending moment	pM(2)=0 kNm
Far end bending moment	pM(3)=0 kNm

UNIVERSAL COLUMN	**203 x 203 x 46 UKC Grade S 275**	
DESIGN	**Design BM z-z axis**	**1 kNm**
SUMMARY	**Moment resistance (MzRd)**	**63.525 kNm**
	Design BM y-y axis	**30 kNm**
	Moment resistance (MyRd)	**136.68 kNm**
	Buckling resistance	**136.68 kNm**
	Design compression load	**590 kN**
	Axial resistance	**1614.3 kN**
	Interaction factors	**0.62179 ≤ 1**
		0.95711 ≤ 1

Location: Moment about major axis and load

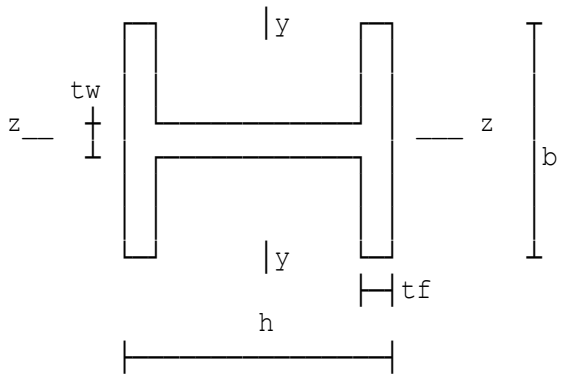

H Section Column

Calculations in accordance with BS EN 1993-1-1:2005. Internal forces and moments have been determined by elastic global analysis. factored.
All forces and moments are factored.

Design moment about minor axis	MzEd=0 kNm
Design shear force	VyEd=0 kN
Design axial load (+ve comp)	NEd=600 kN
Length of member	L=6 m
Moment about the y-y axis	MyEd=60 kNm
Accompanying shear force	VzEd=30 kN

254 x 254 x 89 UKC
Dimensions (mm): h=260.3 b=256.3 tw=10.3 tf=17.3 r=12.7
Properties (cm): Iy=14300 Iz=4860 Wply=1220 Wplz=575 It=102

Effective length parameter	K=1
Length for LTB	LT=6 m
Maximum moment on section	M=60 kNm
Far end moment	psiM=-30 kNm
Far end bending moment	pM(1)=-30 kNm
Far end bending moment	pM(3)=-30 kNm

UNIVERSAL COLUMN	**254 x 254 x 89 UKC Grade S 275**	
DESIGN	**Design BM z-z axis**	**0 kNm**
SUMMARY	**Moment resistance (MzRd)**	**152.38 kNm**
	Design BM y-y axis	**60 kNm**
	Moment resistance (MyRd)	**323.3 kNm**
	Buckling resistance	**323.3 kNm**
	Design compression load	**600 kN**
	Axial resistance	**2994.5 kN**
	Interaction factors	**0.32123 ≤ 1**
		0.52148 ≤ 1

Location: Moment about minor axis and load

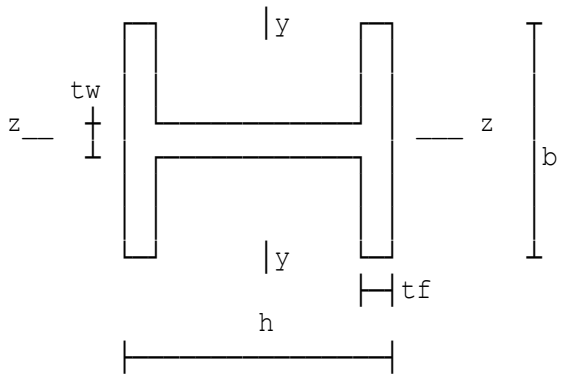

H Section Column

Calculations in accordance with BS EN 1993-1-1:2005. Internal forces and moments have been determined by elastic global analysis. factored.
All forces and moments are factored.

Design moment about minor axis	MzEd=30 kNm
Design shear force	VyEd=16 kN
Design axial load (+ve comp)	NEd=800 kN
Length of member	L=6 m
Moment about the y-y axis	MyEd=0 kNm
Accompanying shear force	VzEd=0 kN

254 x 254 x 89 UKC
Dimensions (mm): h=260.3 b=256.3 tw=10.3 tf=17.3 r=12.7
Properties (cm): Iy=14300 Iz=4860 Wply=1220 Wplz=575 It=102

Far end bending moment	pM(2)=0 kNm

UNIVERSAL COLUMN	**254 x 254 x 89 UKC Grade S 275**	
DESIGN	**Design BM z-z axis**	**30 kNm**
SUMMARY	**Moment resistance (MzRd)**	**152.38 kNm**
	Design compression load	**800 kN**
	Axial resistance	**2994.5 kN**
	Interaction factors	**0.4416 ≤ 1**
		0.71666 ≤ 1

Location: Tensile load and moments

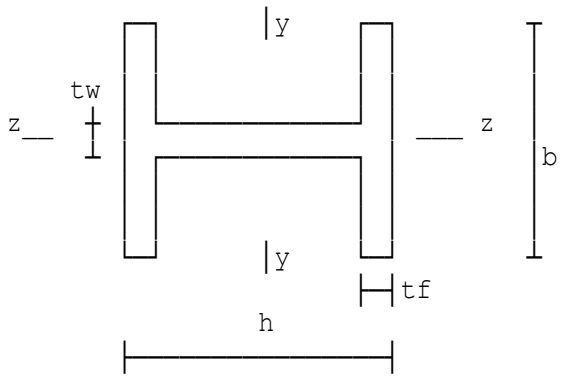

H Section Column

Calculations in accordance with BS EN 1993-1-1:2005. Internal forces and moments have been determined by elastic global analysis. factored.
All forces and moments are factored.

Design moment about minor axis	MzEd=30 kNm
Design shear force	VyEd=16 kN
Design axial load (+ve comp)	NEd=-1000 kN
Length of member	L=6 m
Moment about the y-y axis	MyEd=60 kNm
Accompanying shear force	VzEd=30 kN

254 x 254 x 89 UKC
Dimensions (mm): h=260.3 b=256.3 tw=10.3 tf=17.3 r=12.7
Properties (cm): Iy=14300 Iz=4860 Wply=1220 Wplz=575 It=102

Effective length parameter	K=1
Length for LTB	LT=6 m
Maximum moment on section	M=60 kNm
Far end moment	psiM=0 kNm

UNIVERSAL COLUMN	**254 x 254 x 89 UKC Grade S 275**	
DESIGN	**Design BM z-z axis**	**30 kNm**
SUMMARY	**Moment resistance (MzRd)**	**152.38 kNm**
	Design BM y-y axis	**60 kNm**
	Moment resistance (MyRd)	**323.3 kNm**
	Buckling resistance	**323.3 kNm**
	Design tensile load	**1000 kN**
	Axial resistance	**2994.5 kN**
	Interaction factors	**0.71641 ≤ 1**

Location: Default Example

Annex E Effective lengths of compression members

```
                \\\
                 ═╥═
                  ╥ K1
                  ╥
\    K11          ╥k1       K12     /
\═══════════════════════════════════/
                  ╥
                  ╥Kc
\    K21          ╥         K22     /
\═══════════════════════════════════/
                  ╥k2
    Figure        ╥
    E.3           ╥K2
                 ═╨═
                \\\
```

The effective length LE for in-plane buckling of a column in a continuous structure with moment-resisting joints

The column being designed is Kc.
K = stiffness coefficients
k = distribution factors

Take 75% of inertia for pin ended members.
Take zero inertia and unit length for missing members.

305 x 305 x 118 UC.
Inertia of column being designed Ic=27700 cm⁴
Length of column being designed lc=4 m
305 x 305 x 118 UC.
Inertia of upper column Iu=27700 cm⁴
Length of upper column lu=4 m
305 x 305 x 118 UC.
Inertia of lower column Il=27700 cm⁴
Length of lower column ll=6 m
610 x 229 x 125 UB.
Inertia of top left beam Itl=98600 cm⁴
Length of top left beam ltl=10 m
Inertia of top right beam Itr=0 cm⁴
Inertia of bottom left beam Ibl=0 cm⁴
610 x 229 x 125 UB.
Inertia of bottom right beam Ibr=98600 cm⁴
Length of bottom right beam lbr=10 m

Joint restraint coefficients

The frame under consideration is unbraced against sidesway.
Upper formula Figure E.2 uf=1-0.2*(k1+k2)-0.12*k1*k2=0.738
Lower formula lf=1-0.8*(k1+k2)+0.6*k1*k2=0.29
Ratio effective/actual length LE'L=(uf/lf)^0.5=1.59

Location: Lowest length of a column

Annex E Effective lengths of compression members

```
                \\\
                 ╥
                 │K1
                 │
\    K11         │k1       K12     /
\╞═══════════════╪═══════════════╡/
                 │
                 │Kc
\    K21         │         K22     /
\╞═══════════════╪═══════════════╡/
                 │k2
    Figure       │
    E.3          │K2
                 ╨
                \\\
```

The effective length LE for in-plane buckling of a column in a continuous structure with moment-resisting joints

The column being designed is Kc.
K = stiffness coefficients
k = distribution factors

Take 75% of inertia for pin ended members.
Take zero inertia and unit length for missing members.

305 x 305 x 118 UC.
Inertia of column being designed Ic=27700 cm⁴
Length of column being designed lc=4 m
305 x 305 x 118 UC.
Inertia of upper column Iu=27700 cm⁴
Length of upper column lu=4 m
610 x 229 x 125 UB.
Inertia of top left beam Itl=98600 cm⁴
Length of top left beam ltl=10 m
Inertia of top right beam Itr=0 cm⁴

Joint restraint coefficients

The frame under consideration is braced against sidesway.
Sum of distribution factors ks=k1+k2=1.57
Ratio effective/actual length LE'L=0.5+0.14*ks+0.055*ks^2=0.856

Location: Using E.3 and E.4

Annex E Effective lengths of compression members

```
                \\\
                 ═
                 ╫ K1
                 ╫
\    K11         ╫ k1       K12     /
\╟═══════════════╫═══════════════════╢/
                 ╫
                 ╫ Kc
\    K21         ╫          K22     /
\╟═══════════════╫═══════════════════╢/
                 ╫ k2
    Figure       ╫
    E.3          ╫ K2
                 ═
                \\\
```

The effective length LE for in-plane buckling of a column in a continuous structure with moment-resisting joints

The column being designed is Kc.
K = stiffness coefficients
k = distribution factors

Take 75% of inertia for pin ended members.
Take zero inertia and unit length for missing members.

305 x 305 x 118 UC.
Inertia of column being designed Ic=27700 cm⁴
Length of column being designed lc=4 m
305 x 305 x 118 UC.
Inertia of upper column Iu=27700 cm⁴
Length of upper column lu=4 m
305 x 305 x 118 UC.
Inertia of lower column Il=27700 cm⁴
Length of lower column ll=5 m
610 x 229 x 125 UB.
Inertia of top left beam Itl=98600 cm⁴
Length of top left beam ltl=10 m
Inertia of top right beam Itr=0 cm⁴
610 x 229 x 125 UB.
Inertia of bottom left beam Ibl=98600 cm⁴
Length of bottom left beam lbl=10 m
Inertia of bottom right beam Ibr=0 cm⁴

Joint restraint coefficients

Taking into account the stiffening effects of wall panels in the storey in accordance with Annex E.3.

Stiffness of columns

Number of columns in storey a=28
Column inertia Ic(1)=27600 cm⁴
Length of column lc=4 m
No. of columns with stiffness n1(1)=14
Column inertia Ic(2)=22200 cm⁴
Length of column lc=4 m
No. of columns with stiffness n1(2)=14

E.3.4 Stiffness of panels

Number of wall panels in storey	wall=4
Width of panel	b(1)=6 m
Thickness of panel	T(1)=150 mm
Modulus of elasticity of panel	Ep(1)=16 kN/mm²
No. of panels with stiffness	n2(1)=4
Total spring stiffness	Sp=1840 kN/mm

Relative stiffness

Modulus of elasticity of steel	E=205 kN/mm²
Interpolating between Tables E.4 and E.5 for kp=1.03	
Ratio of length with kp as 1	LE1=TABLE 4 for k1=0.584, k2=0.558 =1.43
Ratio of length with kp as 2	LE2=TABLE 5 for k1=0.584, k2=0.558 =1.3
Ratio effective/actual length	LE'L=LE1-(kp-1)*(LE1-LE2)=1.42

Location: Ex1 - Default example

Effective lengths of compression members - NCCI SN008a-EN-EU

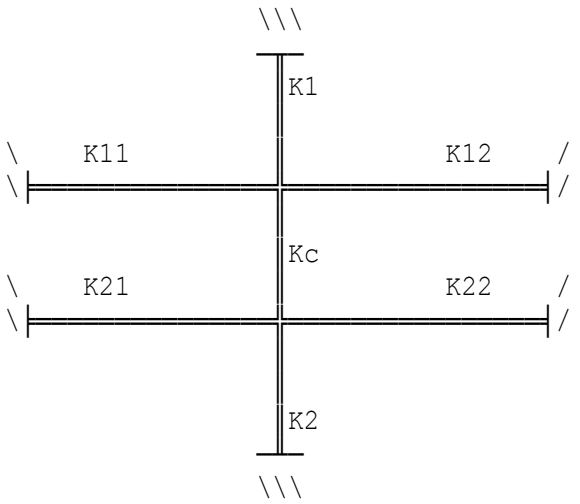

The buckling length 'Lcr' for in-plane buckling of a column in a continuous structure with moment-resisting joints.
Kc = stiffness coefficient of column being designed.
K1, K2, K11, K12, K21, K22 are the column and beam stiffness coefficients.
Take 75% of inertia for pin ended members and zero inertia & unit length for missing members.

305 x 305 x 118 UKC	
Inertia of column being designed	Ic=27700 cm⁴
Length of column being designed	lc=4 m
305 x 305 x 118 UKC	
Inertia of upper column	Iu=27700 cm⁴
Length of upper column	lu=4 m
305 x 305 x 118 UKC	
Inertia of lower column	Il=27700 cm⁴
Length of lower column	ll=6 m
610 x 229 x 125 UKB	
Inertia of top left beam	Itl=98600 cm⁴
Length of top left beam	ltl=10 m
Inertia of top right beam	Itr=0 cm⁴
Inertia of bottom left beam	Ibl=0 cm⁴
610 x 229 x 125 UKB	
Inertia of bottom right beam	Ibr=98600 cm⁴
Length of bottom right beam	lbr=10 m

Joint restraint coefficients

The frame under consideration is unbraced against sidesway.

Upper formula	uf=1-0.2*(eta1+eta2)-0.12*eta1*eta2 =0.738
Lower formula	lf=1-0.8*(eta1+eta2)+0.6*eta1*eta2 =0.29
Ratio effective/actual length	Lcr'L=(uf/lf)^0.5=1.59
Buckling length	Lcr=Lcr'L*lc=6.38 m

Location: Ex2 - Lowest length of a column

Effective lengths of compression members - NCCI SN008a-EN-EU

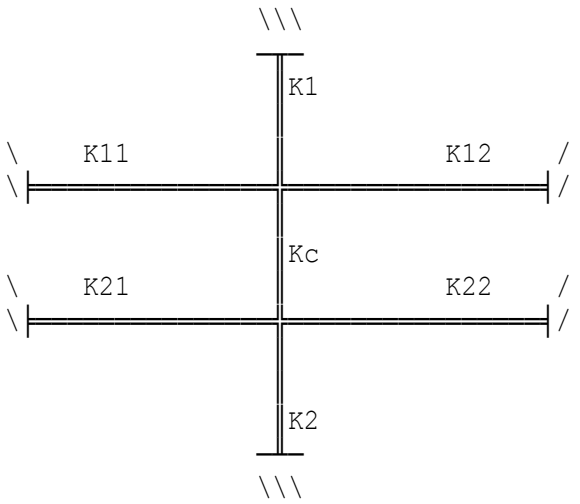

The buckling length 'Lcr' for in-plane buckling of a column in a continuous structure with moment-resisting joints.
Kc = stiffness coefficient of column being designed.
K1, K2, K11, K12, K21, K22 are the column and beam stiffness coefficients.
Take 75% of inertia for pin ended members and zero inertia & unit length for missing members.

305 x 305 x 118 UKC
Inertia of column being designed Ic=27700 cm⁴
Length of column being designed lc=4 m
305 x 305 x 118 UKC
Inertia of upper column Iu=27700 cm⁴
Length of upper column lu=4 m
610 x 229 x 125 UKB
Inertia of top left beam Itl=98600 cm⁴
Length of top left beam ltl=10 m
Inertia of top right beam Itr=0 cm⁴

Joint restraint coefficients

The frame under consideration is braced against sidesway.
Sum of distribution factors eta=eta1+eta2=1.57
Ratio effective/actual length Lcr'L=0.5+0.14*eta+0.055*eta^2=0.856
Buckling length Lcr=Lcr'L*lc=3.42 m

Location: Ex3 - Beam with direct load

Effective lengths of compression members - NCCI SN008a-EN-EU

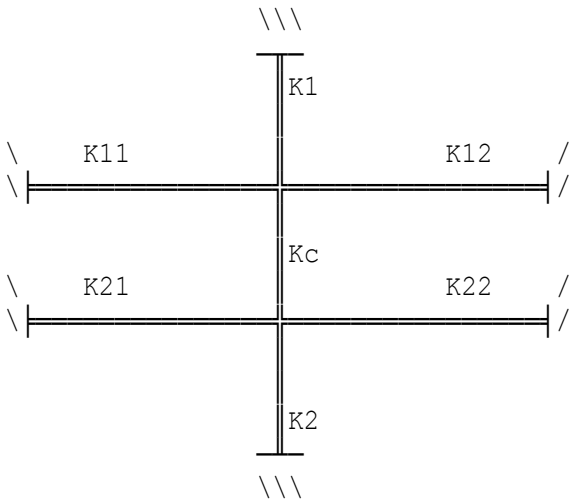

The buckling length 'Lcr' for in-plane buckling of a column in a continuous structure with moment-resisting joints.
Kc = stiffness coefficient of column being designed.
K1, K2, K11, K12, K21, K22 are the column and beam stiffness coefficients.
Take 75% of inertia for pin ended members and zero inertia & unit length for missing members.

305 x 305 x 118 UKC
Inertia of column being designed Ic=27700 cm⁴
Length of column being designed lc=4 m
305 x 305 x 118 UKC
Inertia of upper column Iu=27700 cm⁴
Length of upper column lu=4 m
305 x 305 x 118 UKC
Inertia of lower column Il=27700 cm⁴
Length of lower column ll=5 m
610 x 229 x 125 UKB
Inertia of top left beam Itl=98600 cm⁴
Length of top left beam ltl=10 m
Inertia of top right beam Itr=0 cm⁴
610 x 229 x 125 UKB
Inertia of bottom left beam Ibl=98600 cm⁴
Length of bottom left beam lbl=10 m
Inertia of bottom right beam Ibr=0 cm⁴

Joint restraint coefficients

Taking into account the stiffening effects of wall panels in the storey.

Stiffness of columns

Number of columns in storey a=28
Column inertia Ic(1)=27700 cm⁴
Length of column lc=4 m
No. of columns with stiffness n1(1)=14
Column inertia Ic(2)=22200 cm⁴
Length of column lc=4 m
No. of columns with stiffness n1(2)=14

Stiffness of panels

Number of wall panels in storey	wall=4
Storey height	h=lc=4 m
Width of panel	b(1)=6 m
Thickness of panel	T(1)=150 mm
Modulus of elasticity of panel	Ep(1)=16 kN/mm²
No. of panels with stiffness	n2(1)=4
Total spring stiffness	Sp=1840 kN/mm

Relative stiffness

Modulus of elasticity of steel	E=210 kN/mm²
Ratio of length with kp as 1	LE1=1.43
Ratio of length with kp as 2	LE2=1.3
Ratio effective/actual length	Lcr'L=LE1-(kp-1)*(LE1-LE2)=1.42
Buckling length	Lcr=Lcr'L*lc=5.7 m

Location: Default example bi-axial bending

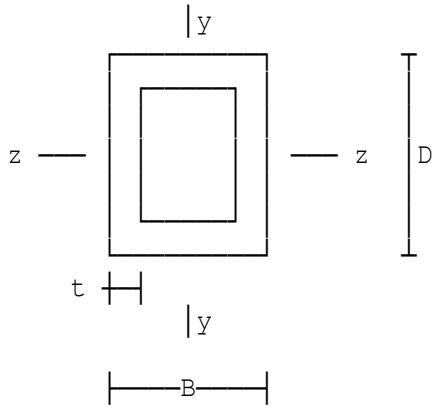

Structural Hollow Section Column

Calculations in accordance with BS5950:Part 1:2000 Sections 4.7 and 4.8.

All loads and moments are factored.

Factored bending moment axis zz	Mz=14 kNm
Factored shear force y-y direct.	Fv=0 kN
Axial load (+ve compression)	F=500 kN
Length of member	L=3.5 m

200 x 100 x 5 RHS - Hot finished.
Properties (cm): A=28.7 rx=7.21 Zx=149 Sx=185 Ix=1500
J=1200 C=172 Zy=101 Sy=114 Iy=505 ry=4.19
(where rz=rx, Zz=Zx, Sz=Sx & Iz=Ix)

Factored bending moment axis yy	My=1 kNm
Young's Modulus	E=205 kN/mm²
Length between restraints z axis	Lz=3500 mm
Length between restraints y axis	Ly=3500 mm
Far end BM	betaM=0 kNm
Maximum moment on segment	Mz=14 kNm
Far end BM	betaMz=0 kNm
Far end BM	betaMy=0 kNm
Maximum moment on segment	Mmaxy=1 kNm
Far end BM	betay=0 kNm
Dist. betwn torsional restraints	LT=3.5 m

HOT FINISHED	**In accordance with EN 10210**	
RECTANGULAR HOLLOW SECTION	**200 x 100 x 5 RHS Grade S 355**	
SECTION	**Section is satisfactory for axial**	
SUMMARY	**load, and overall buckling check.**	
	Axial load	**500 kN**
	Compression resistance	**764.58 kN**
	Maximum moment z axis	**14 kNm**
	Moment capacity	**65.675 kNm**
	Maximum moment y axis	**1 kNm**
	Moment capacity	**40.47 kNm**
	Local capacity check	**0.72863 ≤ 1**
	Overall buckling checks	**0.69532 ≤ 1**
		0.73758 ≤ 1
		0.39795 ≤ 1

Location: Example - bending about minor axis only

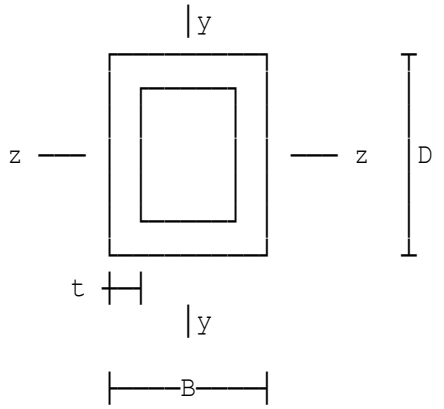

Structural Hollow Section Column

Calculations in accordance with BS5950:Part 1:2000 Sections 4.7 and 4.8.

All loads and moments are factored.

Factored bending moment axis zz	Mz=0 kNm
Factored shear force y-y direct.	Fv=23 kN
Axial load (+ve compression)	F=1500 kN
Length of member	L=6 m

300 x 200 x 8 RHS - Cold formed.
Properties (cm): A=75.2 rx=11.2 Zx=626 Sx=757 Ix=9390
J=10600 C=838 Zy=504 Sy=574 Iy=5040 ry=8.19
(where rz=rx, Zz=Zx, Sz=Sx & Iz=Ix)

Factored bending moment axis yy	My=14 kNm
Young's Modulus	E=205 kN/mm²
Length between restraints z axis	Lz=6000 mm
Length between restraints y axis	Ly=6000 mm

COLD FORMED
RECTANGULAR HOLLOW SECTION
SECTION
SUMMARY

In accordance with EN 10219
300 x 200 x 8 RHS Grade S 355
Section is satisfactory for axial load, and overall buckling check.

Axial load	**1500 kN**
Compression resistance	**1771.1 kN**
Maximum moment y axis	**14 kNm**
Moment capacity	**172.84 kNm**
Local capacity check	**0.65958 ≤ 1**
Overall buckling checks	**0.96224 ≤ 1**
	0.75202 ≤ 1

Location: Bending about x-x axis only

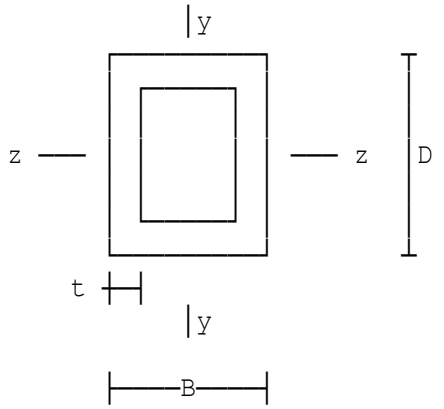

Structural Hollow Section Column

Calculations in accordance with BS5950:Part 1:2000 Sections 4.7 and 4.8.

All loads and moments are factored.

Factored bending moment axis zz	Mz=320 kNm
Factored shear force y-y direct.	Fv=327 kN
Axial load (+ve compression)	F=1000 kN
Length of member	L=6 m

400 x 200 x 10 RHS - Cold formed.
Properties (cm): A=113 rx=14.3 Zx=1150 Sx=1430 Ix=23000
J=19400 C=1370 Zy=786 Sy=888 Iy=7860 ry=8.36
(where rz=rx, Zz=Zx, Sz=Sx & Iz=Ix)

Factored bending moment axis yy	My=0 kNm
Young's Modulus	E=205 kN/mm²
Length between restraints z axis	Lz=6000 mm
Length between restraints y axis	Ly=6000 mm
Far end BM	betaM=0 kNm
Maximum moment on segment	Mz=320 kNm
Far end BM	betaMz=0 kNm
Dist. betwn torsional restraints	LT=6 m

COLD FORMED
RECTANGULAR HOLLOW SECTION
SECTION
SUMMARY

In accordance with EN 10219
400 x 200 x 10 RHS Grade S 355
Section is satisfactory for axial load, and overall buckling check.

Axial load	**1000 kN**
Compression resistance	**2393 kN**
Maximum moment z axis	**320 kNm**
Moment capacity	**507.65 kNm**
Local capacity check	**0.87964 ≤ 1**
Overall buckling checks	**0.71632 ≤ 1**
	0.60699 ≤ 1

Location: Default example bi-axial bending

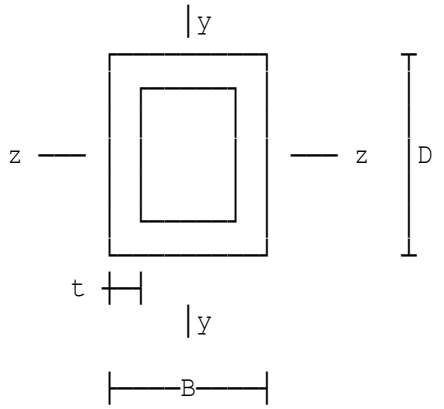

Structural Hollow Section Column

Calculations in accordance with BS5950:Part 1:2000 Sections 4.7 and 4.8.

All loads and moments are factored.

Factored bending moment axis zz	Mz=14 kNm
Factored shear force y-y direct.	Fv=0 kN
Axial load (+ve compression)	F=500 kN
Length of member	L=3.5 m

200 x 100 x 5 RHS - Hot finished.
Properties (cm): A=28.7 rx=7.21 Zx=149 Sx=185 Ix=1500
J=1200 C=172 Zy=101 Sy=114 Iy=505 ry=4.19
(where rz=rx, Zz=Zx, Sz=Sx & Iz=Ix)

Factored bending moment axis yy	My=1 kNm
Young's Modulus	E=205 kN/mm²
Length between restraints z axis	Lz=3500 mm
Length between restraints y axis	Ly=3500 mm
Far end BM	betaM=0 kNm
Maximum moment on segment	Mz=14 kNm
Far end BM	betaMz=0 kNm
Far end BM	betaMy=0 kNm
Maximum moment on segment	Mmaxy=1 kNm
Far end BM	betay=0 kNm
Dist. betwn torsional restraints	LT=3.5 m

values to applied factored values Rf=0.6

HOT FINISHED **In accordance with EN 10210**
RECTANGULAR HOLLOW SECTION **200 x 100 x 5 RHS Grade S 355**
SECTION **Section is satisfactory for axial**
SUMMARY **load, and overall buckling check.**

Axial load	**500 kN**
Compression resistance	**764.58 kN**
Maximum moment z axis	**14 kNm**
Moment capacity	**65.675 kNm**
Maximum moment y axis	**1 kNm**
Moment capacity	**40.47 kNm**
Local capacity check	**0.72863 ≤ 1**
Overall buckling checks	**0.69532 ≤ 1**
	0.73758 ≤ 1
	0.39795 ≤ 1

FIRE RESISTANCE SUMMARY

Exposed surface area	**600 mm²**
Area of section	**28.7 cm²**
Section factor	**205 /m**
Load Ratio (R)	**0.47915**

Section does not have an inherent fire resistance of 30 minutes. Fire protection should be provided.

Location: SCI example (SHS)

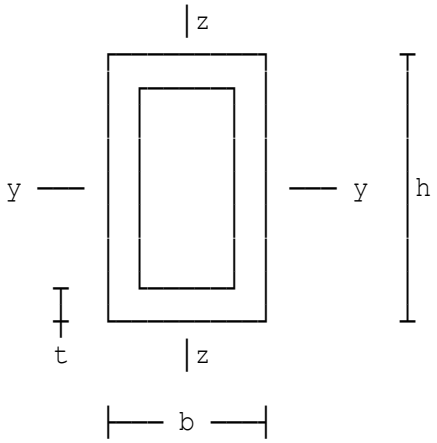

Hollow Section Column Design

Calculations are in accordance with EN 1993-1-1 & EN 1993-1-2.

Internal forces and moments have been determined by elastic global analysis.

All loads and moments are factored.

Moment about y-y axis	MyEd=20 kNm
Shear force	VzEd=10 kN
Axial load (+ve compression)	NEd=600 kN
Length of member	L=3.5 m
Moment about the z-z axis	MzEd=5 kNm
Accompanying shear force	VyEd=6 kN

150 x 150 x 6.3 SHS - Hot finished.
Properties (cm): A=35.8 iy=5.85 Wely=163 Wply=192 Iy=1220 It=1910
Wt=240

Length between restraints (y-y)	Ly=3.5 m
Length between restraints (z-z)	Lz=3.5 m
Far end bending moment	pM(1)=0 kNm
Far end bending moment	pM(2)=0 kNm
Effective length parameter	K=1
Length for LTB	LT=3.5 m
Maximum moment on section	M=20 kNm
Far end moment	psiM=0 kNm

HOT FINISHED	**In accordance with EN 10210**	
SQUARE HOLLOW SECTION	**150 x 150 x 6.3 SHS Grade S 355**	
DESIGN	**Design BM y-y axis**	**20 kNm**
SUMMARY	**Moment resistance (y-y)**	**68.16 kNm**
	Design BM z-z axis	**5 kNm**
	Moment resistance (z-z)	**68.16 kNm**
	Design compression load	**600 kN**
	Axial resistance	**1270.9 kN**
	Interaction factors	**0.85889 ≤ 1**
		0.78794 ≤ 1

Fire resistance without applied protection

Unfactored permanent axial force	Np=200 kN
Unfactored variable axial force	Nv=220 kN
Design axial compressive force	NfiEd=1.0*Np+1.0*Nv=420 kN

Determine critical temperature of steel in fire situation

Buckling length in fire situation Lfi=2450 mm
Critical temperature θcr tCR=TABLE 254 for mo=0.33047, lamfi
=0.64492
=579.41 °C
Fire resistance period 18 minutes

Interaction of axial loads and moments in fire situation

The interaction of axial compression and bending is given by the following expression (EN 1993-1-2 Clause 4.2.3.5):

Unity expression R=NfiEd/NfiRd+kLT*MfiEdy/MybRd+kz*MfiEdz/MzRd
=0.67281

As R ≤ 1, section capacity is OK for a FR period of 18 minutes.

FIRE RESISTANCE SUMMARY **The section does not have an inherent fire resistance of 30 minutes. Fire protection should be provided.**

Location: Minor axis moment and axial load (RHS)

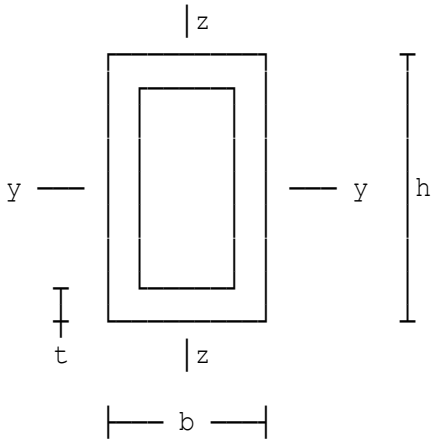

Hollow Section Column Design

Calculations are in accordance with EN 1993-1-1 & EN 1993-1-2.

Internal forces and moments have been determined by elastic global analysis.

All loads and moments are factored.

Moment about y-y axis	MyEd=0 kNm
Shear force	VzEd=0 kN
Axial load (+ve compression)	NEd=2000 kN
Length of member	L=4 m
Moment about the z-z axis	MzEd=40 kNm
Accompanying shear force	VyEd=18 kN

300 x 200 x 10 RHS - Cold formed.
Properties (cm): A=92.6 iy=11.1 Wely=754 Wply=921 Iy=11300 It=13000
Welz=606 Wplz=698 Iz=6060 iz=8.09 Wt=1010

Length between restraints (y-y)	Ly=4 m
Length between restraints (z-z)	Lz=4 m
Far end bending moment	pM(2)=-20 kNm

COLD FORMED	**In accordance with EN 10219**	
RECTANGULAR HOLLOW SECTION	**300 x 200 x 10 RHS Grade S 355**	
DESIGN	**Design BM y-y axis**	**0 kNm**
SUMMARY	**Moment resistance (y-y)**	**326.95 kNm**
	Design BM z-z axis	**40 kNm**
	Moment resistance (z-z)	**247.79 kNm**
	Design compression load	**2000 kN**
	Axial resistance	**3287.3 kN**
	Interaction factors	**0.76219 ≤ 1**
		0.89135 ≤ 1

Location: Tensile load and moments (RHS)

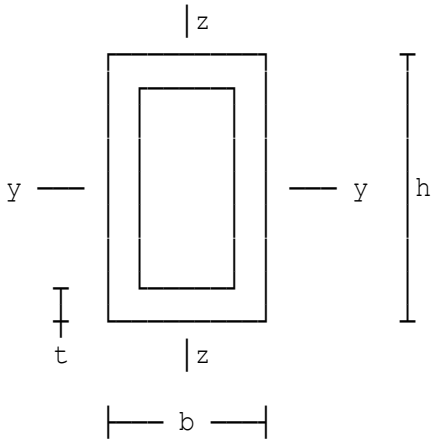

Hollow Section Column Design

Calculations are in accordance with EN 1993-1-1 & EN 1993-1-2.

Internal forces and moments have been determined by elastic global analysis.

All loads and moments are factored.

Moment about y-y axis	MyEd=50 kNm
Shear force	VzEd=20 kN
Axial load (+ve compression)	NEd=-750 kN
Length of member	L=5 m
Moment about the z-z axis	MzEd=40 kNm
Accompanying shear force	VyEd=18 kN

WARNING:
Section unknown.
300 x 150 x 8 RHS - Hot finished.
Properties (cm): A=82.009 iz=6.114 Wely=595.53 Wply=760.06 Iy=8915.5 It=6619.2 Wt=629.48 Welz=369.98 Wplz=430.98 Iz =2899.4 iy=10.57

Effective length parameter	K=0.85
Length for LTB	LT=5 m
Maximum moment on section	M=50 kNm
Far end moment	psiM=20 kNm

HOT FINISHED	**In accordance with EN 10210**	
RECTANGULAR HOLLOW SECTION	**300 x 150 x 8 RHS Grade S 355**	
DESIGN	**Design BM y-y axis**	**50 kNm**
SUMMARY	**Moment resistance (y-y)**	**269.82 kNm**
	Design BM z-z axis	**40 kNm**
	Moment resistance (z-z)	**153 kNm**
	Design tensile load	**750 kN**
	Axial resistance	**2911.3 kN**
	Interaction factors	**0.70436 ≤ 1**

Location: Method of Clause 5.3.3

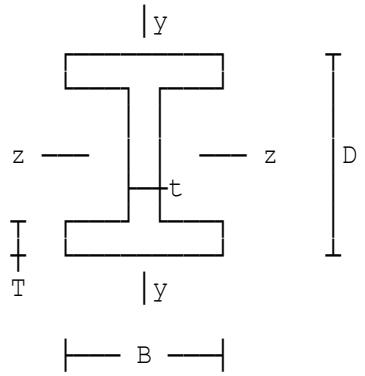

Plastic design of stanchions

Calculations in accordance with BS5950:Part 1:2000 Sections 5.3 and Annex G.

All loads and moments are factored.

Note: Plastic design may be used where loading is predominantly static and fatigue will not be a design criterion.

Design moment about z-z axis	Mz=614 kNm
Design shear force	Fv=94.9 kN
Design axial load (+ve comp)	F=173 kN
Length of member	L=6.47 m

533 x 210 x 92 UB.

Young's Modulus	E=205 kN/mm²
Far end bending moment value	Mf=462 kNm
Maximum moment on segment	MLT=462 kNm
Far end BM	betaM=0 kNm
Effective length	Le=4870 mm
Maximum moment on segment	Mz'=462 kNm
Far end BM	betaMz=0 kNm

UNIVERSAL BEAM DESIGN SUMMARY

533 x 210 x 92 UB Grade S 275
Section is satisfactory for plastic design in accordance with BS5950-1.
Provide lateral restraint to both flanges at plastic hinge location.
Intermediate torsional restraint(s) provided 1600 mm below hinge

Compressive load	**173 kN**
Compressive resistance	**1485 kN**
Factored moment	**614 kNm**
Local capacity check	**1 ≤ 1**
Overall buckling check	**0.639 ≤ 1**
	0.89 ≤ 1

Location: Method of Annex G

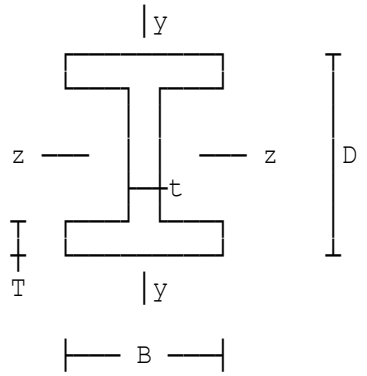

Plastic design of stanchions

Calculations in accordance with BS5950:Part 1:2000 Sections 5.3 and Annex G.

All loads and moments are factored.

Note: Plastic design may be used where loading is predominantly static and fatigue will not be a design criterion.

Design moment about z-z axis	Mz=820 kNm
Design shear force	Fv=102 kN
Design axial load (+ve comp)	F=193 kN
Length of member	L=8 m

610 x 229 x 113 UB.

Young's Modulus	E=205 kN/mm²
Distance betw. ref. axes (fig G1)	a'=365 mm
Smaller end moment	Ms=-82 kNm

UNIVERSAL BEAM DESIGN SUMMARY

610 x 229 x 113 UB Grade S 275
Section is satisfactory for plastic design in accordance with BS5950-1.
Provide lateral restraint to both flanges at plastic hinge location.
Intermediate torsional restraint(s) to be provided 2000 mm below hinge.
No other additional restraint needed

Compressive load	**193 kN**
Compressive resistance	**1705 kN**
Factored moment	**820 kNm**
Local capacity check	**0.994 ≤ 1**

Location: Method of 5.3.4

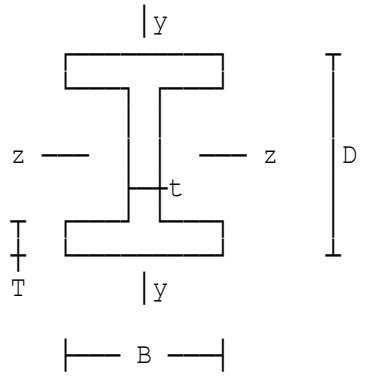

Plastic design of stanchions

Calculations in accordance with BS5950:Part 1:2000 Sections 5.3 and Annex G.

All loads and moments are factored.

Note: Plastic design may be used where loading is predominantly static and fatigue will not be a design criterion.

Design moment about z-z axis	Mz=635 kNm
Design shear force	Fv=108 kN
Design axial load (+ve comp)	F=206 kN
Length of member	L=6 m

457 x 191 x 89 UB.

Young's Modulus	E=205 kN/mm²
Distance	ls=2000 mm
about z-z axis	Lz=6000 mm
Maximum moment on segment	MLT=402 kNm
Far end BM	betaM=-64 kNm
Effective length	Le=4500 mm
Maximum moment on segment	Mz'=635 kNm
Far end BM	betaMz=-64 kNm

UNIVERSAL BEAM DESIGN SUMMARY

457 x 191 x 89 UB Grade S 355
Section is satisfactory for plastic design in accordance with BS5950-1.
Provide lateral restraint to both flanges at plastic hinge location.
Intermediate torsional restraint(s) provided 2000 mm below hinge

Compressive load	**206 kN**
Compressive resistance	**1940 kN**
Factored moment	**635 kNm**
Local capacity check	**0.968 ≤ 1**
Overall buckling check	**0.709 ≤ 1**
	0.688 ≤ 1

Location: Method of Clause 5.3.3 - UC section

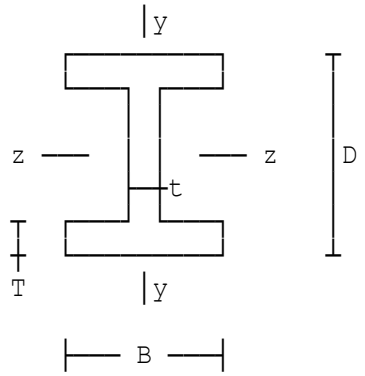

Plastic design of stanchions

Calculations in accordance with BS5950:Part 1:2000 Sections 5.3 and Annex G.

All loads and moments are factored.

Note: Plastic design may be used where loading is predominantly static and fatigue will not be a design criterion.

Design moment about z-z axis	Mz=414 kNm
Design shear force	Fv=94.9 kN
Design axial load (+ve comp)	F=575 kN
Length of member	L=4.27 m

254 x 254 x 132 UC.

Young's Modulus	E=205 kN/mm²

UNIVERSAL COLUMN DESIGN SUMMARY

254 x 254 x 132 UC Grade S 275
Section is satisfactory for plastic design in accordance with BS5950-1.
Provide lateral restraint to both flanges at plastic hinge location.

Location: Ex1 - Based on example 13, 'Steelwork Design Guide'

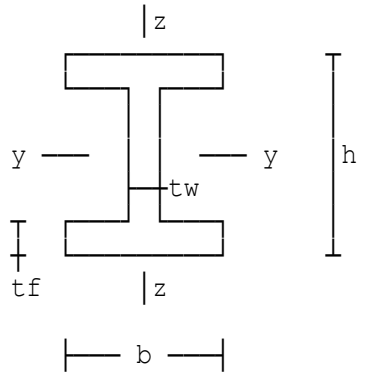

Plastic design of stanchions

Calculations in accordance with BS EN 1993-1-1:2005 Clause 6.3.5 and Annex BB.3.

All loads and moments are factored.

Note: Plastic design may be used where loading is predominantly static and fatigue will not be a design criterion.

Design moment about major axis	MyEd=608 kNm
Design shear force	VzEd=94.9 kN
Design axial load (+ve comp)	NEd=173 kN
Length of member	L=6.47 m

533 x 210 x 92 UKB

Moment resistance - Clause 6.2.5

Design moment resistance yy axis McRd=fy*Wply/(gamM0*10^3)=649 kNm
Since MyEd ≤ McRd (608 kNm ≤ 649 kNm) design moment within the moment resistance.

Cross-section resistance - Clause 6.2(7)

$$\frac{NEd}{A.fy} + \frac{MyEd}{McRd} \leq 1$$

Unity factor uf=NEd*10/(A*fy)+MyEd/McRd=0.991
The interaction formula is satisfied.

Column stability

At the column plastic hinge location (i.e. at the bottom of the haunch lateral restraint to both flanges needs to be provided (Annex BB.3). The maximum distance from the plastic hinge to the adjacent lateral restraint is derived from the following expression:

$$Lm' = \frac{38\ iz}{\left[\frac{1}{57.4}.\left[\frac{NEd'}{A}\right] + \frac{1}{756(C1)^2}.\left[\frac{(Wply)^2}{A.It}\right].\left[\frac{fy}{235}\right]^2\right]^{0.5}}$$

Axial load at hinge position	NEd'=173 kN
Provide a restraint at	Lm=1125 mm below plastic hinge

CALCULATIONS FOR LOWER COLUMN SEGMENT AB

Column segment length AB Le=L*1000-Lm=5345 mm
Moment at column base MyEdA=0 kNm (pinned base)
Moment at restraint position B MyEdB=502 kNm

Lateral torsional buckling - lower column segment

Length for LTB LT=Lz/1000=5.35 m
Critical moment Mcr=C1*Et*Sr/10^6=981 kNm
Modified chiLT factor ChiLT=chiLT/f=0.862
Design buckling resistance moment MbRd=ChiLT*Wply*fy/(gamM1*10^3)
=560 kNm
As MyEdB ≤ MbRd (502 kNm ≤ 560 kNm), design moment at
point B is within the buckling resistance moment. Hence OK.
Far end bending moment pM(1)=0 kNm
Far end bending moment pM(2)=0 kNm
Interaction factor kyy=0.605
Interaction factor kzy=0.961
Section chosen is suitable.
Section chosen is suitable.

CALCULATIONS FOR UPPER COLUMN SEGMENT BC

Upper column segment length Le=Lm=1125 mm
Lengths for buckling:
about y-y axis (major axis) Ly=6470 mm (whole col.length)
about z-z axis (minor axis) Lz=1125 mm

Lateral torsional buckling

Length for LTB LT=Lz/1000=1.12 m
Critical moment Mcr=C1*Et*Sr/10^6=11245 kNm
Lateral torsional buckling effects are ignored.
Modification factor ChiLT=1.0
Design buckling resistance moment MbRd=ChiLT*Wply*fy/(gamM1*10^3)
=649 kNm
As MyEd ≤ MbRd (608 kNm ≤ 649 kNm), design moment at
point B is within the buckling resistance moment. Hence OK.
Far end bending moment pM(3)=502 kNm
Interaction factor kyy=0.605
Interaction factor kzy=0.887
Section chosen is suitable.
Section chosen is suitable.

UNIVERSAL BEAM	**533 x 210 x 92 UKB Grade S 275**
DESIGN SUMMARY	**Section is satisfactory for plastic design to EC3 Part 1-1.**
	Lateral restraint to both flanges assumed at points B and C.
	Design axial load 173 kN
	Buckling resistance 1281 kN
	Design moment at point C 608 kNm
	Design moment at point B 502 kNm
	Cross-section resistance 0.991 ≤ 1
	Interaction factors 0.711 ≤ 1
	0.997 ≤ 1
	0.62 ≤ 1
	0.884 ≤ 1

Location: Ex2 - I Column section with moment at base

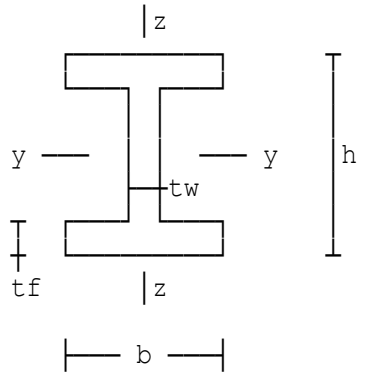

Plastic design of stanchions

Calculations in accordance with BS EN 1993-1-1:2005 Clause 6.3.5 and Annex BB.3.

All loads and moments are factored.

Note: Plastic design may be used where loading is predominantly static and fatigue will not be a design criterion.

Design moment about major axis	MyEd=820 kNm
Design shear force	VzEd=102 kN
Design axial load (+ve comp)	NEd=193 kN
Length of member	L=8 m

610 x 229 x 125 UKB

Moment resistance - Clause 6.2.5

Design moment resistance yy axis McRd=fy*Wply/(gamM0*10^3)=975 kNm
Since MyEd ≤ McRd (820 kNm ≤ 975 kNm) design moment within the moment resistance.

Cross-section resistance - Clause 6.2(7)

$$\frac{NEd}{A.fy} + \frac{MyEd}{McRd} \leq 1$$

Unity factor uf=NEd*10/(A*fy)+MyEd/McRd=0.887
The interaction formula is satisfied.

Column stability

At the column plastic hinge location (i.e. at the bottom of the haunch lateral restraint to both flanges needs to be provided (Annex BB.3). The maximum distance from the plastic hinge to the adjacent lateral restraint is derived from the following expression:

$$Lm' = \frac{38\ iz}{\left[\frac{1}{57.4}.\left[\frac{NEd'}{A}\right] + \frac{1}{756(C1)^2}.\left[\frac{(Wply)^2}{A.It}\right].\left[\frac{fy}{235}\right]^2\right]^{0.5}}$$

Axial load at hinge position	NEd'=193 kN
Provide a restraint at	Lm=1300 mm below plastic hinge

CALCULATIONS FOR LOWER COLUMN SEGMENT AB

Column segment length AB Le=L*1000-Lm=6700 mm
Maximum moment on segment MyEdB=673 kNm
Far end bending moment value MyEdA=-82 kNm (fixed base)

Lateral torsional buckling - lower column segment

Length for LTB LT=Lz/1000=6.7 m
Critical moment Mcr=C1*Et*Sr/10^6=1368 kNm
Modified chiLT factor ChiLT=chiLT/f=0.85
Design buckling resistance moment MbRd=ChiLT*Wply*fy/(gamM1*10^3)
=829 kNm
As MyEdB ≤ MbRd (673 kNm ≤ 829 kNm), design moment at
point B is within the buckling resistance moment. Hence OK.
Far end bending moment pM(1)=-82 kNm
Far end bending moment pM(2)=-82 kNm
Interaction factor kyy=0.564
Interaction factor kzy=0.954
Section chosen is suitable.
Section chosen is suitable.

CALCULATIONS FOR UPPER COLUMN SEGMENT BC

Upper column segment length Le=Lm=1300 mm
Lengths for buckling:
about y-y axis (major axis) Ly=8000 mm (whole col.length)
about z-z axis (minor axis) Lz=1300 mm

Lateral torsional buckling

Length for LTB LT=Lz/1000=1.3 m
Critical moment Mcr=C1*Et*Sr/10^6=15940 kNm
Lateral torsional buckling effects are ignored.
Modification factor ChiLT=1.0
Design buckling resistance moment MbRd=ChiLT*Wply*fy/(gamM1*10^3)
=975 kNm
As MyEd ≤ MbRd (820 kNm ≤ 975 kNm), design moment at
point B is within the buckling resistance moment. Hence OK.
Far end bending moment pM(3)=673 kNm
Interaction factor kyy=0.564
Interaction factor kzy=0.896
Section chosen is suitable.
Section chosen is suitable.

UNIVERSAL BEAM	**610 x 229 x 125 UKB Grade S 275**
DESIGN SUMMARY	**Section is satisfactory for plastic design to EC3 Part 1-1.**
	Lateral restraint to both flanges assumed at points B and C.
	Design axial load 193 kN
	Buckling resistance 1406 kN
	Design moment at point C 820 kNm
	Design moment at point B 673 kNm
	Cross-section resistance 0.887 ≤ 1
	Interaction factors 0.604 ≤ 1
	0.912 ≤ 1
	0.52 ≤ 1
	0.799 ≤ 1

Location: Ex3 - I Column section with moment at base

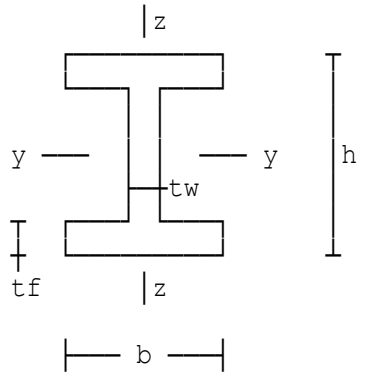

Plastic design of stanchions

Calculations in accordance with BS EN 1993-1-1:2005 Clause 6.3.5 and Annex BB.3.

All loads and moments are factored.

Note: Plastic design may be used where loading is predominantly static and fatigue will not be a design criterion.

Design moment about major axis	MyEd=635 kNm
Design shear force	VzEd=108 kN
Design axial load (+ve comp)	NEd=206 kN
Length of member	L=6 m

457 x 191 x 89 UKB

Moment resistance - Clause 6.2.5

Design moment resistance yy axis McRd=fy*Wply/(gamM0*10^3)=693 kNm
Since MyEd ≤ McRd (635 kNm ≤ 693 kNm) design moment within the moment resistance.

Cross-section resistance - Clause 6.2(7)

$$\frac{NEd}{A.fy} + \frac{MyEd}{McRd} \leq 1$$

Unity factor uf=NEd*10/(A*fy)+MyEd/McRd=0.968
The interaction formula is satisfied.

Column stability

At the column plastic hinge location (i.e. at the bottom of the haunch lateral restraint to both flanges needs to be provided (Annex BB.3). The maximum distance from the plastic hinge to the adjacent lateral restraint is derived from the following expression:

$$Lm' = \frac{38\ iz}{\left[\frac{1}{57.4}.\left[\frac{NEd'}{A}\right] + \frac{1}{756(C1)^2}.\left[\frac{(Wply)^2}{A.It}\right].\left[\frac{fy}{235}\right]^2\right]^{0.5}}$$

Axial load at hinge position	NEd'=206 kN
Provide a restraint at	Lm=950 mm below plastic hinge

CALCULATIONS FOR LOWER COLUMN SEGMENT AB

Column segment length AB Le=L*1000-Lm=5050 mm
Maximum moment on segment MyEdB=524 kNm
Far end bending moment value MyEdA=-64 kNm (fixed base)

Lateral torsional buckling - lower column segment

Length for LTB LT=Lz/1000=5.05 m
Critical moment Mcr=C1*Et*Sr/10^6=987 kNm
Modified chiLT factor ChiLT=chiLT/f=0.855
Design buckling resistance moment MbRd=ChiLT*Wply*fy/(gamM1*10^3)
=593 kNm
As MyEdB ≤ MbRd (524 kNm ≤ 593 kNm), design moment at
point B is within the buckling resistance moment. Hence OK.
Far end bending moment pM(1)=-64 kNm
Far end bending moment pM(2)=-64 kNm
Interaction factor kyy=0.566
Interaction factor kzy=0.948
Section chosen is suitable.
Section chosen is suitable.

CALCULATIONS FOR UPPER COLUMN SEGMENT BC

Upper column segment length Le=Lm=950 mm
Lengths for buckling:
about y-y axis (major axis) Ly=6000 mm (whole col.length)
about z-z axis (minor axis) Lz=950 mm

Lateral torsional buckling

Length for LTB LT=Lz/1000=0.95 m
Critical moment Mcr=C1*Et*Sr/10^6=11919 kNm
Lateral torsional buckling effects are ignored.
Modification factor ChiLT=1.0
Design buckling resistance moment MbRd=ChiLT*Wply*fy/(gamM1*10^3)
=693 kNm
As MyEd ≤ MbRd (635 kNm ≤ 693 kNm), design moment at
point B is within the buckling resistance moment. Hence OK.
Far end bending moment pM(3)=524 kNm
Interaction factor kyy=0.566
Interaction factor kzy=0.886
Section chosen is suitable.
Section chosen is suitable.

UNIVERSAL BEAM	**457 x 191 x 89 UKB Grade S 355**
DESIGN SUMMARY	**Section is satisfactory for plastic design to EC3 Part 1-1.**
	Lateral restraint to both flanges assumed at points B and C.
	Design axial load 206 kN
	Buckling resistance 1315 kN
	Design moment at point C 635 kNm
	Design moment at point B 524 kNm
	Cross-section resistance 0.968 ≤ 1
	Interaction factors 0.659 ≤ 1
	0.995 ≤ 1
	0.57 ≤ 1
	0.864 ≤ 1

Location: Ex4 - Using UC section with moment at base

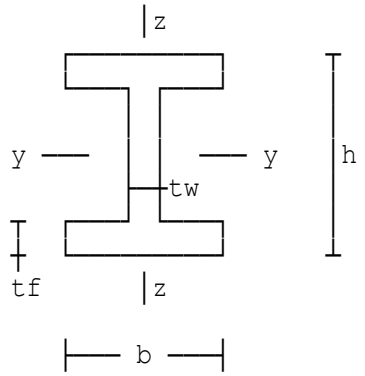

Plastic design of stanchions

Calculations in accordance with BS EN 1993-1-1:2005 Clause 6.3.5 and Annex BB.3.

All loads and moments are factored.

Note: Plastic design may be used where loading is predominantly static and fatigue will not be a design criterion.

Design moment about major axis	MyEd=414 kNm
Design shear force	VzEd=94.9 kN
Design axial load (+ve comp)	NEd=575 kN
Length of member	L=4.27 m

254 x 254 x 132 UKC

Moment resistance - Clause 6.2.5

Design moment resistance yy axis McRd=fy*Wply/(gamM0*10^3)=496 kNm
Since MyEd ≤ McRd (414 kNm ≤ 496 kNm) design moment within the moment resistance.

Cross-section resistance - Clause 6.2(7)

$$\frac{NEd}{A.fy} + \frac{MyEd}{McRd} \leq 1$$

Unity factor uf=NEd*10/(A*fy)+MyEd/McRd=0.965
The interaction formula is satisfied.

Column stability

At the column plastic hinge location (i.e. at the bottom of the haunch lateral restraint to both flanges needs to be provided (Annex BB.3). The maximum distance from the plastic hinge to the adjacent lateral restraint is derived from the following expression:

$$Lm' = \frac{38\ iz}{\left[\frac{1}{57.4}.\left[\frac{NEd'}{A}\right] + \frac{1}{756(C1)^2}.\left[\frac{(Wply)^2}{A.It}\right].\left[\frac{fy}{235}\right]^2\right]^{0.5}}$$

Axial load at hinge position	NEd'=575 kN
Provide a restraint at	Lm=1825 mm below plastic hinge

CALCULATIONS FOR LOWER COLUMN SEGMENT AB

Column segment length AB Le=L*1000-Lm=2445 mm
Maximum moment on segment MyEdB=186 kNm
Far end bending moment value MyEdA=-120 kNm (fixed base)

Lateral torsional buckling - lower column segment

Length for LTB LT=Lz/1000=2.45 m
Critical moment Mcr=C1*Et*Sr/10^6=10319 kNm
Design buckling resistance moment MbRd=ChiLT*Wply*fy/(gamM1*10^3)
=496 kNm
As MyEdB ≤ MbRd (186 kNm ≤ 496 kNm), design moment at
point B is within the buckling resistance moment. Hence OK.
Far end bending moment pM(1)=-120 kNm
Far end bending moment pM(2)=-120 kNm
Interaction factor kyy=0.498
Interaction factor kzy=0.964
Section chosen is suitable.
Section chosen is suitable.

CALCULATIONS FOR UPPER COLUMN SEGMENT BC

Upper column segment length Le=Lm=1825 mm
Lengths for buckling:
about y-y axis (major axis) Ly=4270 mm (whole col.length)
about z-z axis (minor axis) Lz=1825 mm

Lateral torsional buckling

Length for LTB LT=Lz/1000=1.82 m
Critical moment Mcr=C1*Et*Sr/10^6=9242 kNm
Lateral torsional buckling effects are ignored.
Modification factor ChiLT=1.0
Design buckling resistance moment MbRd=ChiLT*Wply*fy/(gamM1*10^3)
=496 kNm
As MyEd ≤ MbRd (414 kNm ≤ 496 kNm), design moment at
point B is within the buckling resistance moment. Hence OK.
Far end bending moment pM(3)=186 kNm
Interaction factor kyy=0.498
Interaction factor kzy=0.908
Section chosen is suitable.
Section chosen is suitable.

UNIVERSAL COLUMN DESIGN SUMMARY

254 x 254 x 132 UKC Grade S 275
Section is satisfactory for plastic design to EC3 Part 1-1.
Lateral restraint to both flanges assumed at points B and C.
Design axial load 575 kN
Buckling resistance 4452 kN
Design moment at point C 414 kNm
Design moment at point B 186 kNm
Cross-section resistance 0.965 ≤ 1

Interaction factors	**0.545 ≤ 1**
	0.491 ≤ 1
	0.545 ≤ 1
	0.888 ≤ 1

Location: Ex5 - Based on example in SCI P397

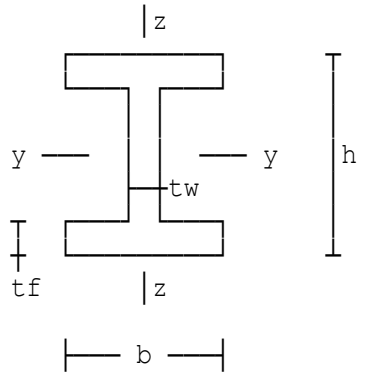

Plastic design of stanchions

Calculations in accordance with BS EN 1993-1-1:2005 Clause 6.3.5 and Annex BB.3.

All loads and moments are factored.

Note: Plastic design may be used where loading is predominantly static and fatigue will not be a design criterion.

Design moment about major axis	MyEd=1034 kNm
Design shear force	VzEd=100 kN
Design axial load (+ve comp)	NEd=271 kN
Length of member	L=12.3 m

686 x 254 x 125 UKB

Moment resistance - Clause 6.2.5

Design moment resistance yy axis McRd=fy*Wply/(gamM0*10^3)=1377 kNm
Since MyEd ≤ McRd (1034 kNm ≤ 1377 kNm) design moment within the moment resistance.

Cross-section resistance - Clause 6.2(7)

$$\frac{NEd}{A.fy} + \frac{MyEd}{McRd} \leq 1$$

Unity factor uf=NEd*10/(A*fy)+MyEd/McRd=0.801
The interaction formula is satisfied.

Column stability

At the column plastic hinge location (i.e. at the bottom of the haunch lateral restraint to both flanges needs to be provided (Annex BB.3). The maximum distance from the plastic hinge to the adjacent lateral restraint is derived from the following expression:

$$Lm' = \frac{38\ iz}{\left[\frac{1}{57.4}.\left[\frac{NEd'}{A}\right] + \frac{1}{756(C1)^2}.\left[\frac{(Wply)^2}{A.It}\right].\left[\frac{fy}{235}\right]^2\right]^{0.5}}$$

Axial load at hinge position	NEd'=271 kN
Provide a restraint at	Lm=1050 mm below plastic hinge

CALCULATIONS FOR LOWER COLUMN SEGMENT AB

Column segment length AB Le=6450 mm
Moment at column base MyEdA=0 kNm (pinned base)
Moment at restraint position C MyEdC=946 kNm
Moment at restraint position B MyEdB=542 kNm

Lateral torsional buckling - lower column segment

Length for LTB LT=Lz/1000=6.45 m
Critical moment Mcr=C1*Et*Sr/10^6=1508 kNm
Modified chiLT factor ChiLT=chiLT/f=0.756
Design buckling resistance moment MbRd=ChiLT*Wply*fy/(gamM1*10^3)
=1040 kNm
As MyEdB ≤ MbRd (542 kNm ≤ 1040 kNm), design moment at
point B is within the buckling resistance moment. Hence OK.
Far end bending moment pM(1)=0 kNm
Far end bending moment pM(2)=0 kNm
Interaction factor kyy=0.611
Interaction factor kzy=0.955
Section chosen is suitable.
Section chosen is suitable.

CALCULATIONS FOR INTERMEDIATE COLUMN SEGMENT BC

Lengths for buckling:
about y-y axis (major axis) Ly=12300 mm (whole col.length)
about z-z axis (minor axis) Lz=4800 mm

Lateral torsional buckling

Length for LTB LT=Lz/1000=4.8 m
Critical moment Mcr=C1*Et*Sr/10^6=1813 kNm
Limiting slenderness value lamLT0=0.4
Modified chiLT factor ChiLT=chiLT/f=0.766
Design buckling resistance moment MbRd=ChiLT*Wply*fy/(gamM1*10^3)
=1054 kNm
As MyEdC ≤ MbRd (946 kNm ≤ 1054 kNm), design moment at
point B is within the buckling resistance moment. Hence OK.
Far end bending moment pM(4)=542 kNm
Interaction factor kyy=0.611
Interaction factor kzy=0.983
Section chosen is suitable.
Unity factor Un6=NEd/(chiz*NRd)+kzy*MyEdC/(ChiLT
*McRd)=0.983
Section chosen is suitable.

CALCULATIONS FOR UPPER COLUMN SEGMENT CD

Upper column segment length Le=Lm=1050 mm
Lengths for buckling:
about y-y axis (major axis) Ly=12300 mm (whole col.length)
about z-z axis (minor axis) Lz=1050 mm

Lateral torsional buckling

Length for LTB LT=Lz/1000=1.05 m
Critical moment Mcr=C1*Et*Sr/10^6=28689 kNm
Lateral torsional buckling effects are ignored.
Modification factor ChiLT=1.0
Design buckling resistance moment MbRd=ChiLT*Wply*fy/(gamM1*10^3)
=1377 kNm
As MyEd ≤ MbRd (1034 kNm ≤ 1377 kNm), design moment at
point B is within the buckling resistance moment. Hence OK.
Far end bending moment pM(3)=946 kNm
Interaction factor kyy=0.611
Interaction factor kzy=0.858
Section chosen is suitable.
Section chosen is suitable.

UNIVERSAL BEAM DESIGN SUMMARY

686 x 254 x 125 UKB Grade S 355
Section is satisfactory for plastic design to EC3 Part 1-1.
Lateral restraint to both flanges assumed at points B, C and D.

Design axial load	**271 kN**
Buckling resistance	**1715 kN**
Design moment at point D	**1034 kNm**
Design moment at point C	**946 kNm**
Design moment at point B	**542 kNm**
Cross-section resistance	**0.801 ≤ 1**
Interaction factors	**0.657 ≤ 1**
	0.656 ≤ 1
	0.509 ≤ 1
	0.694 ≤ 1
	0.649 ≤ 1
	0.983 ≤ 1

Location: Example 14, 'Steelwork Design Guide'

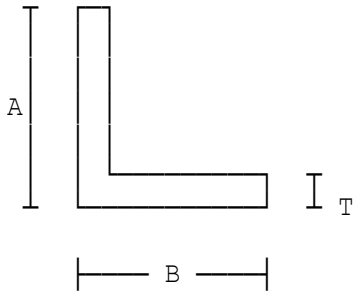

Design of Axially Loaded Section

formed from single angle
In accordance with BS5950-1:2000

Loads are factored.

Factored axial compressive load	Fc=43 kN
Factored axial tensile load	Ft=12 kN
Length	L=2154 mm

60 x 60 x 6 mm Equal Angle.

Young's Modulus	E=205 kN/mm²

About axis // to connected leg	La=2154 mm
About axis ⊥ to connected leg	Lb=2154 mm
About v-v axis	Lv=2154 mm

EQUAL ANGLE	**60 x 60 x 6 Grade S 275**	
SECTION	**Section is satisfactory for axial**	
SUMMARY	**load.**	
	Welding equivalent to at least two bolts at each end.	
	Compressive load	**43 kN**
	Compressive resistance	**43.86 kN**
	Tensile load	**12 kN**
	Tensile capacity	**162.72 kN**

Location: single bolt connection

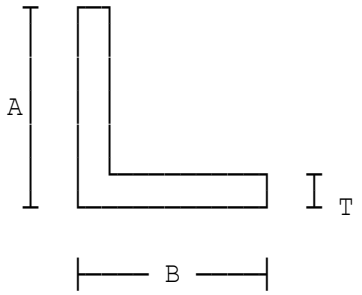

Design of Axially Loaded Section

formed from single angle
In accordance with BS5950-1:2000

Loads are factored.

Factored axial compressive load	Fc=15 kN
Factored axial tensile load	Ft=14 kN
Length	L=2000 mm

75 x 50 x 6 mm Unequal Angle.

Young's Modulus	E=205 kN/mm²
Diameter of bolts	db=12 mm
About axis // to connected leg	La=2000 mm
About axis ⊥ to connected leg	Lb=2000 mm
About v-v axis	Lv=2000 mm

UNEQUAL ANGLE SECTION SUMMARY	**75 x 50 x 6 Grade S 275**
	Section is satisfactory for axial load.
	Long leg forming connection
	One bolt M 12 at each end
	Compressive load 15 kN
	Compressive resistance 27.297 kN
	Tensile load 14 kN
	Tensile capacity 157.77 kN

Location: Slender section

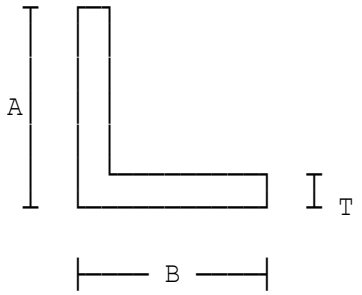

Design of Axially Loaded Section

formed from single angle
In accordance with BS5950-1:2000

Loads are factored.

Factored axial compressive load	Fc=73 kN
Factored axial tensile load	Ft=0 kN
Length	L=3500 mm

125 x 75 x 8 mm Unequal Angle.

Young's Modulus	E=205 kN/mm²
Diameter of bolts	db=16 mm
About axis // to connected leg	La=3500 mm
About axis ⊥ to connected leg	Lb=3500 mm
About v-v axis	Lv=3500 mm

UNEQUAL ANGLE SECTION SUMMARY	**125 x 75 x 8 Grade S 275** **Section is satisfactory for axial load.** **Short leg forming connection** **At least two bolts M 16 at each end** **Compressive load 73 kN** **Compressive resistance 73.828 kN**

Location: Ex1 - Based on 'Steelwork Design Guide'

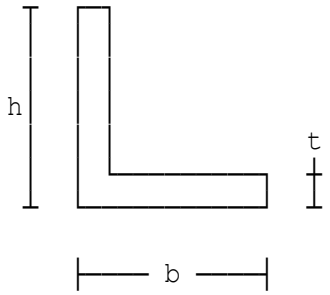

Design of axially loaded angle

Calculations are in accordance with BS EN 1993-1-1:2005.

All loads are factored.

Design axial compressive load	NEd=43 kN
Design axial tensile load	NEdT=12 kN
Length of member	L=2154 mm

60 x 60 x 8 mm Equal Angle (Advance UKA)

EQUAL ANGLE	**60 x 60 x 8 Grade S 275**
DESIGN	**Section is satisfactory for axial**
SUMMARY	**load.**
	Welding equivalent to at least two bolts at each end.
	Design compression load 43 kN
	Compressive resistance 60.006 kN
	Design tensile load 12 kN
	Tensile resistance 185.12 kN

Location: Ex2 - Single bolt connection

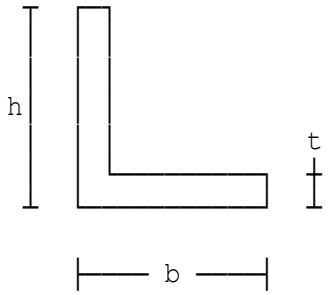

Design of axially loaded angle

Calculations are in accordance with BS EN 1993-1-1:2005.

All loads are factored.

Design axial compressive load	NEd=15 kN
Design axial tensile load	NEdT=14 kN
Length of member	L=2000 mm

75 x 50 x 6 mm Unequal Angle (Advance UKA)

Diameter of bolts	db=12 mm
Edge distance	e2=37.5 mm

UNEQUAL ANGLE	**75 x 50 x 6 Grade S 275**
DESIGN	**Section is satisfactory for axial**
SUMMARY	**load.**
	Long leg forming connection
	One bolt M 12 at each end
	Design compression load 15 kN
	Compressive resistance 38.176 kN
	Design tensile load 14 kN
	Tensile resistance 136.42 kN

Location: Ex3 - Class 3 section

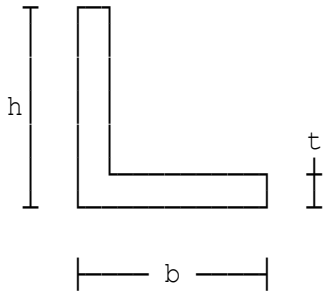

Design of axially loaded angle

Calculations are in accordance with BS EN 1993-1-1:2005.

All loads are factored.

Design axial compressive load NEd=73 kN
Design axial tensile load NEdT=0 kN
Length of member L=3500 mm

125 x 75 x 10 mm Unequal Angle (Advance UKA)
Diameter of bolts db=16 mm
Pitch p1=90 mm

UNEQUAL ANGLE DESIGN SUMMARY

125 x 75 x 10 Grade S 275
Section is satisfactory for axial load.
Short leg forming connection
At least two bolts M 16 at each end
Design compression load 73 kN
Compressive resistance 101.17 kN

Location: Ex4 - Equal angle, user defined section properties

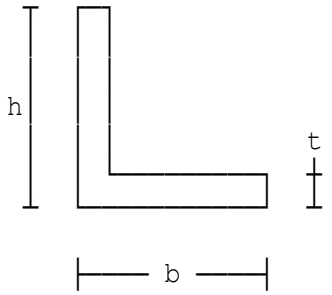

Design of axially loaded angle

Calculations are in accordance with BS EN 1993-1-1:2005.

All loads are factored.

Design axial compressive load	NEd=43 kN
Design axial tensile load	NEdT=12 kN
Length of member	L=2154 mm

EQUAL ANGLE	**60 x 60 x 8 Grade S 275**
DESIGN	**Section is satisfactory for axial**
SUMMARY	**load.**
	Welding equivalent to at least two bolts at each end.
	Design compression load 43 kN
	Compressive resistance 60.229 kN
	Design tensile load 12 kN
	Tensile resistance 183.68 kN

Location: Ex5 - Unequal angle, user defined section properties

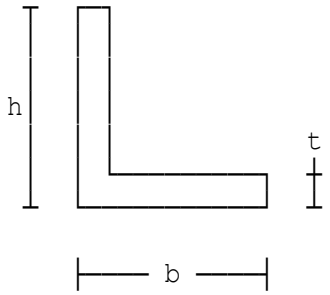

Design of axially loaded angle

Calculations are in accordance with BS EN 1993-1-1:2005.

All loads are factored.

Design axial compressive load	NEd=15 kN
Design axial tensile load	NEdT=14 kN
Length of member	L=2000 mm
Diameter of bolts	db=12 mm
Edge distance	e2=37.5 mm

UNEQUAL ANGLE	**75 x 50 x 6 Grade S 275**
DESIGN	**Section is satisfactory for axial**
SUMMARY	**load.**
	Long leg forming connection
	One bolt M 12 at each end
	Design compression load 15 kN
	Compressive resistance 38.418 kN
	Design tensile load 14 kN
	Tensile resistance 136.42 kN

Location: Design Example 6 Curved Steel publication

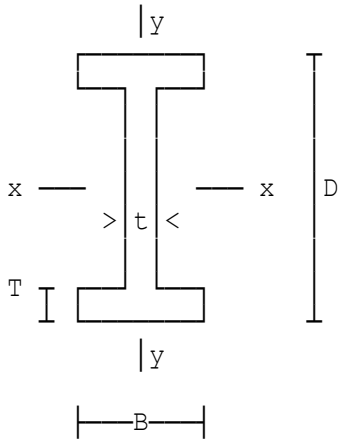

I section beam curved on plan

Calculations in accordance with BS5950-1:2000 and SCI publication entitled "Design of Curved Steel".

Moment connections are assumed in the vertical plane and pin connections on plan.

Loads and moments are factored.

838 x 292 x 226 UB.

Young's Modulus	E=205 kN/mm²
Radius of curvature of beam	R=5 m
Accompanying shear force	Fv=77.6 kN
Maximum radial load	Fa=25.6 kN
Max.horiz.moment in compr.flange	Mycf=90.4 kNm
Quarter point	mx2=-34.5 kNm
Mid-span	mx3=65 kNm
Three quarter point	mx4=-34.5 kNm
Maximum moment on central half	M24=65 kNm
Quarter point	my2=86.8 kNm
Mid-span	my3=43.7 kNm
Three quarter point	my4=-33.4 kNm
Maximum moment on central half	M24y=86.8 kNm
Maximum moment	MLT=274.1 kNm
Quarter point	m2=127 kNm
Mid-span	m3=34.5 kNm
Three quarter point	m4=39 kNm

UNIVERSAL BEAM SECTION DESIGN SUMMARY

838 x 292 x 226 UB Grade S 275
Section is satisfactory for axial, bending, shear, and local capacity, and overall buckling checks.

Factored shear force	**77.6 kN**
Shear capacity	**2178.2 kN**
Vertical moment	**274.1 kNm**
Moment capacity	**2117.8 kNm**
Horizontal moment	**90.4 kNm**
Local capacity check	**1.0086 ≤ 1**
Buckling resistance	**1034.7 kNm**
Overall buckling check	**0.71636 ≤ 1**
	0.79188 ≤ 1

Location: Curved I-beam on plan

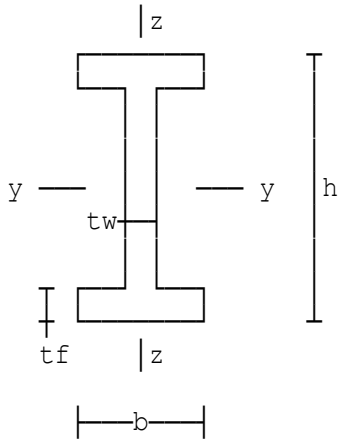

I section beam curved on plan

Beam is curved on plan & design calculations are in accordance with BS EN 1993-1-1:2005.

Moment connections are assumed in the vertical plane and pin connections on plan. All loads and moments are factored.

838 x 292 x 226 UKB
Dimensions (mm): h=850.9 b=293.8 tw=16.1 tf=26.8 r=17.8
Properties (cm): Iy=340000 Iz=11400 Wply=9160 Wplz=1210 It=514

Radius of curvature of beam	R=5 m
Accompanying design shear force	VzEd=77.6 kN
Maximum radial load	Fa=25.6 kN
Design horiz.BM in compr.flange	MzEd=90.4 kNm
Effective length parameter	K=1
Correction factor	kc=0.9

UNIVERSAL BEAM DESIGN SUMMARY

838 x 292 x 226 UB Grade S 275
Section is satisfactory for axial, bending, shear, and local capacity, and overall buckling checks.

Factored shear force	**77.6 kN**
Design shear resistance	**2224.3 kN**
Design vert.bending moment	**274.1 kNm**
Design moment resistance	**2117.8 kNm**
Buckling resistance moment	**2117.8 kNm**
Horizontal design moment	**90.4 kNm**
Interaction factors	**0.89591 ≤ 1**
	0.26277 ≤ 1
	0.38273 ≤ 1

Location: Design Example 6 Curved Steel publication

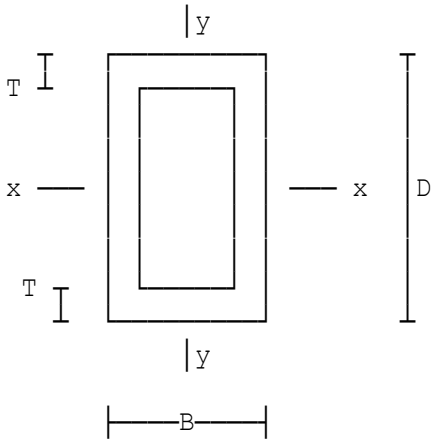

Structural Hollow Section Design

Beam curved in plan.
Calculations are in accordance with BS5950-1:2000 and SCI publication "Design of Curved Steel"
Moment connections are assumed in the vertical plane, pin connections on plan.
All loads and moments are factored.

300 x 200 x 12.5 RHS - Hot finished.
Properties (cm): A=117 rx=11 Zx=952 Sx=1170 Ix=14300
J=15700 C=1220 Zy=754 Sy=877 Iy=7540 ry=8.02

Radius of curvature of beam	R=5 m
about major axis	Mx=253 kNm
Accompanying shear force	Fv=77.6 kN
Maximum radial load	Fa=25.6 kN
Young's Modulus	E=205 kN/mm²
Maximum torque	Tm=37.6 kNm
Quarter point	mx2=-34.5 kNm
Mid-span	mx3=65 kNm
Three quarter point	mx4=-34.5 kNm
Maximum moment on central half	M24=65 kNm
Quarter point	m2=127 kNm
Mid-span	m3=34.5 kNm
Three quarter point	m4=39 kNm

HOT FINISHED
RECTANGULAR HOLLOW SECTION
DESIGN
SUMMARY

In accordance with EN 10210
300 x 200 x 12.5 RHS Grade S 355
Section is satisfactory for axial, bending, shear, and local capacity, and overall buckling checks.

Factored shear force	**77.6 kN**
Shear capacity	**1495.3 kN**
Factored moment	**260.36 kNm**
Moment capacity	**330.83 kNm**
Local capacity check	**0.78699 ≤ 1**
Buckling resistance	**330.83 kNm**
Overall buckling check	**0.25443 ≤ 1**
	0.34627 ≤ 1

Location: Ex1 - Steel beam curved on plan

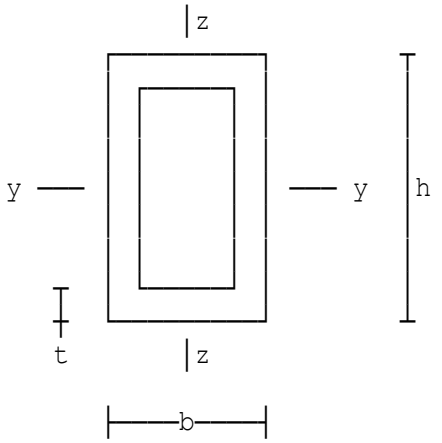

Structural hollow section design

Beam is curved on plan and design calculations are in accordance with BS EN 1993-1-1:2005.

The ends of the curved beam are assumed to be fixed in the vertical plane and pinned on plan. All loads and moments are factored.

300 x 200 x 12.5 RHS - Hot finished.
Properties (cm): A=117 iz=8.02 Wely=952 Wply=1170 Iy=14300
It=15700 Wt=1220 Welz=754 Wplz=877 Iz=7540 iy=11

Radius of curvature of beam	R=5 m
Accompanying design shear force	VzEd=77.6 kN
Maximum radial load	Fa=25.6 kN
Design torque	Tm=37.6 kNm
Effective length parameter	K=1
Correction factor	kc=0.9

HOT FINISHED
RECTANGULAR HOLLOW SECTION
DESIGN
SUMMARY

In accordance with EN 10210
300 x 200 x 12.5 RHS Grade S 355
Section is satisfactory for axial, bending, shear, and local capacity, and overall buckling checks.

Design shear force	**77.6 kN**
Design shear resistance	**1438.8 kN**
Design bending moment	**260.36 kNm**
Moment resistance	**330.83 kNm**
Buckling resistance	**330.83 kNm**
Overall buckling check	**0.78699 ≤ 1**

Location: Design Example 6 Curved Steel publication

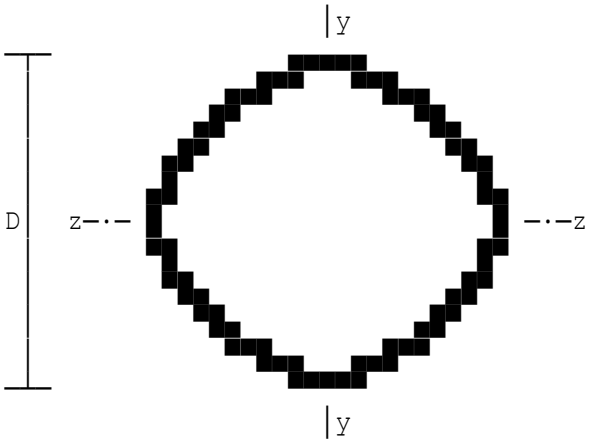

Circular hollow section

Section is curved on plan. Calculations in accordance with BS5950: Part 1:2000 and SCI publication "Design of Curved Steel". Moment connections are assumed in the vertical plane and pin connections on plan.
All loads and moments are factored.

Radius of curvature of beam	R=5 m
about the major axis	Mx=253 kNm
Accompanying shear force	Fv=77.6 kN
Maximum radial load	Fa=25.6 kN
Young's Modulus	E=205 kN/mm²
Maximum torque	Tm=37.6 kNm
Quarter point	mx2=-34.5 kNm
Mid-span	mx3=65 kNm
Three quarter point	mx4=-34.5 kNm
Maximum moment on central half	M24=65 kNm
Quarter point	m2=127 kNm
Mid-span	m3=34.5 kNm
Three quarter point	m4=39 kNm

HOT FINISHED
CIRCULAR HOLLOW SECTION
DESIGN
SUMMARY

In accordance with EN 10210
323.9 O.D. x 10 CHS Grade S 355
Section is satisfactory for axial, bending, shear, and local capacity, and overall buckling checks.

Factored shear force	**77.6 kN**
Shear capacity	**1260.3 kN**
Factored moment	**261.04 kNm**
Moment capacity	**261.86 kNm**
Local capacity check	**0.99687 ≤ 1**
Buckling resistance	**261.86 kNm**
Overall buckling check	**0.32196 ≤ 1**
	0.43862 ≤ 1

Location: Ex1 - Curved CHS with bending about the major axis

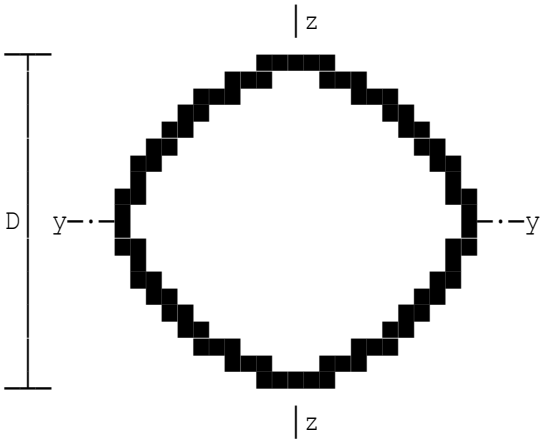

Circular hollow section design

Beam is curved on plan and calculations are in accordance with BS EN 1993-1-1:2005.

The ends of the curved beam are assumed to be fixed in the vertical plane and pinned on plan. All loads and moments are factored.

323.9 dia x 10 thick CHS - Hot finished.
Properties (cm): A=98.615 iy=11.104 Wely=750.75 Wply=985.67 Iy=12158
It=24317

Radius of curvature of beam	R=5 m
Accompanying design shear force	VzEd=77.6 kN
Max radial load from analysis	Fa=25.6 kN
Design torque from analysis	Tm=37.6 kNm
Effective length parameter	K=1
Correction factor	kc=0.9

HOT FINISHED
CIRCULAR HOLLOW SECTION
DESIGN SUMMARY

In accordance with EN 10210
323.9 O.D. x 10 CHS Grade S 355
Section is satisfactory for axial, bending, shear, and local capacity, and overall buckling checks.

Design shear force	**77.6 kN**
Design hear resistance	**1286.7 kN**
Design bending moment	**261.04 kNm**
Moment resistance	**262.04 kNm**
Buckling resistance	**262.04 kNm**
Interaction factor	**0.99617 ≤ 1**

Location: Example including EC2 summary

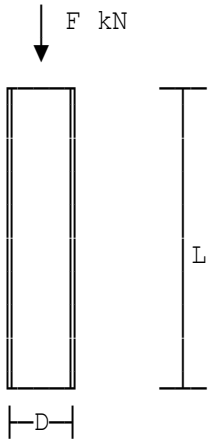

Axially loaded column

Calculations are in accordance with BS5950-1:2000 and 'Steelwork Design Guide to BS5950' published by SCI.

Compressive load is factored.

Factored axial compressive load	F=2000 kN
254 x 254 x 107 UC.	
Young's Modulus	E=205 kN/mm²
Effective length factor (x axis)	efx=1
Effective length factor (y axis)	efy=0.7

UNIVERSAL COLUMN SECTION	**254 x 254 x 107 UC Grade S 275 Section is satisfactory for axial load check.**	
DESIGN	**Axial compressive load**	**2000 kN**
SUMMARY	**Compression resistance**	**2019.7 kN**

Location: Example 6.1

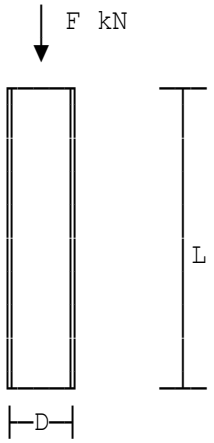

Axially loaded column

Calculations are in accordance with BS5950-1:2000 and 'Steelwork Design Guide to BS5950' published by SCI.

Compressive load is factored.

Factored axial compressive load	F=700 kN
457 x 191 x 67 UB.	
Young's Modulus	E=205 kN/mm²
Effective length factor (x axis)	efx=0.85
Effective length factor (y axis)	efy=0.85

UNIVERSAL BEAM SECTION	**457 x 191 x 67 UB Grade S 355 Section is satisfactory for axial load check.**	
DESIGN	**Axial compressive load**	**700 kN**
SUMMARY	**Compression resistance**	**2552.9 kN**

Location: Example 6.2

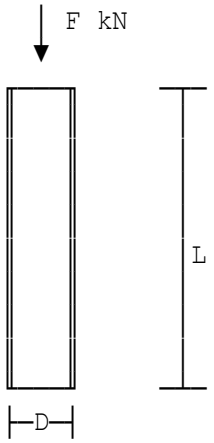

Axially loaded column

Calculations are in accordance with BS5950-1:2000 and 'Steelwork Design Guide to BS5950' published by SCI.

Compressive load is factored.

Factored axial compressive load	F=1840 kN
457 x 191 x 67 UB.	
Young's Modulus	E=205 kN/mm²
Effective length factor (x axis)	efx=0.85
Effective length factor (y axis)	efy=0.85

UNIVERSAL BEAM SECTION	**457 x 191 x 67 UB Grade S 355 Section is satisfactory for axial load check.**	
DESIGN SUMMARY	**Axial compressive load**	**1840 kN**
	Compression resistance	**2323.8 kN**

Location: Access steel example

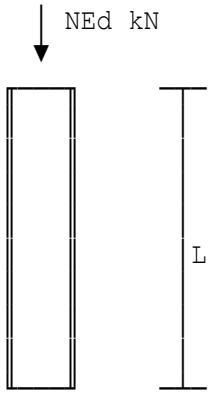

Axially loaded column

Calculations are in accordance with BS EN 1993-1-1:2005.

Compressive load is factored.

Factored axial compressive load NEd=2000 kN
305 x 305 x 97 UKC
Dimensions (mm): h=307.9 b=305.3 tw=9.9 tf=15.4 r=15.2
Properties (cm): Iy=22300 Iz=7310 Wply=1590 Wplz=726 It=91.2
Factor about y-y axis fLy=1
Factor about z-z axis fLz=0.7

SECTION	**305 x 305 x 97 UKC Grade S 275**	
DESIGN	**Axial compressive load**	**2000 kN**
SUMMARY	**Compression resistance**	**2161.8 kN**
	Unity factor	**0.92515 ≤ 1.0**

Location: EX2 - Class 4 section

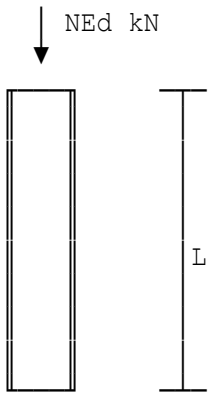

Axially loaded column

Calculations are in accordance with BS EN 1993-1-1:2005.

Compressive load is factored.

Factored axial compressive load NEd=2000 kN
1016 x 305 x 222 UKB
Dimensions (mm): h=970.3 b=300 tw=16 tf=21.1 r=30
Properties (cm): Iy=408000 Iz=9550 Wply=9810 Wplz=1020 It=390

Determine the effective section properties - EN 1992-1-5, Cl. 4.4

The process is iterative as the amount of web not considered is a function of the stresses at the top and bottom of the web.

Iteration 1:
Gross area of section A=2*b*tf+hw*tw=27510 mm²
Gross 2nd moment of area Iy=(b*(hw+2*tf)^3-(b-tw)*hw^3)/12
=3.918E9 mm⁴
Stress at top of web s1=MyEd*10^6*hw/2/Iy=0 N/mm²
Stress at bottom of web s2=-MyEd*10^6*hw/2/Iy=0 N/mm²

Iteration 10 :
Position of effective centroid:
zeff=(A*h/2-Aw*(zeffp+be2+lw/2))/Aeff=485.15 mm
Effective 2nd moment of area:
Iyeff=Iy+A*(h/2-zeff)^2-tw*lw^3/12-Aw*(zeffp+be2+lw/2-zeff)^2
=3.918E9 mm⁴
Top of web stress s1(10)=MyEd*10^6*(h-tf-zeff)/Iyeff
=0 N/mm²
Bottom of web stress s2(10)=-MyEd*10^6*(zeff-tf)/Iyeff
=0 N/mm²
Net loss area Aw=lw*tw=0 mm²
Effective area of section Aeff=A-Aw=27510 mm²
Effective section modulus Weffy=Iyeff/(1000*(h-zeff))=8075.8 cm³
Factor about y-y axis fLy=1
Factor about z-z axis fLz=0.7

SECTION	**1016 x 305 x 222 UKB Grade S 275**	
DESIGN	**Axial compressive load**	**2000 kN**
SUMMARY	**Compression resistance**	**6120.1 kN**
	Unity factor	**0.32679 ≤ 1.0**

Location: Example 1 'SHS Design Examples'

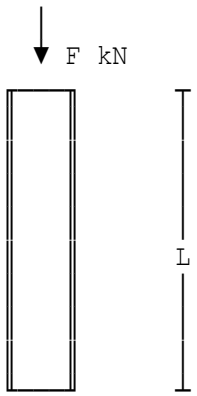

Axially loaded SHS column

Calculations are in accordance with BS5950-1:2000.

Load is factored and for compression members length between restraints is the same for both axes.

Design load (+ve compression) F=1200 kN
Length between restraints L=6000 mm

200 x 200 x 6.3 SHS - Hot finished.
Properties (cm): A=48.4 rx=7.89 Zx=301 Sx=350 Ix=3010 J=4650 C=444
Young's Modulus E=205 kN/mm²

Effective length factor (x axis) efx=1
Effective length factor (y axis) efy=1

HOT FINISHED	**In accordance with EN 10210-1**
SQUARE HOLLOW SECTION	**200 x 200 x 6.3 SHS Grade S 355**
SECTION	**Section is satisfactory for axial**
SUMMARY	**compression load.**
DESIGN	**Axial compressive load 1200 kN**
SUMMARY	**Compressive Resistance 1206.6 kN**

Location: slender section

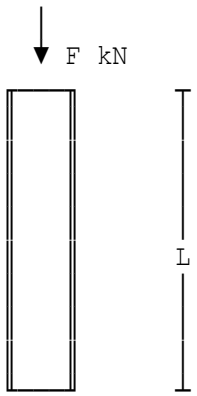

Axially loaded SHS column

Calculations are in accordance with BS5950-1:2000.

Load is factored and for compression members length between restraints is the same for both axes.

Design load (+ve compression) F=1550 kN
Length between restraints L=6000 mm

300 x 200 x 6.3 RHS - Hot finished.
Properties (cm): A=61 rx=11.3 Zx=522 Sx=624 Ix=7830
J=8480 C=681 Zy=419 Sy=472 Iy=4190 ry=8.29
Young's Modulus E=205 kN/mm²

Effective length factor (x axis) efx=1
Effective length factor (y axis) efy=1

WARNING:
As F > Pc (1550 kN > 1480.4 kN) design axial compressive load exceeds compression resistance and section size must be increased.

Location: SCI example

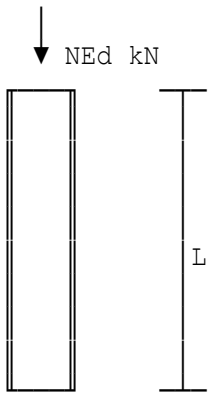

Axially loaded column

Calculations are in accordance with BS EN 1993-1-1:2005.

Compressive load is factored.

Factored axial compressive load NEd=920 kN
200 x 200 x 6.3 SHS - Hot finished.
Properties (cm): A=48.4 iy=7.89 Wely=301 Wply=350 Iy=3010 It=4650
Wt=444
Factor about y-y axis fLy=1
Factor about z-z axis fLz=1

HOT FINISHED	**In accordance with EN 10210-1**	
SQUARE HOLLOW SECTION	**200 x 200 x 6.3 SHS Grade S 355**	
DESIGN	**Axial compressive load**	**920 kN**
SUMMARY	**Compression resistance**	**1148.8 kN**
	Unity factor	**0.80087 ≤ 1**

Location: RHS cold formed

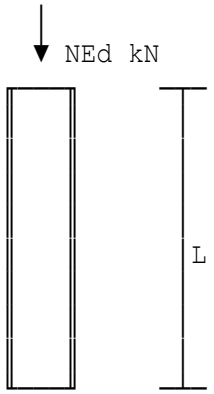

Axially loaded column

Calculations are in accordance with BS EN 1993-1-1:2005.

Compressive load is factored.

Factored axial compressive load	NEd=2200 kN
buckling about major axis	Ly=6000 mm
buckling about minor axis	Lz=3000 mm

300 x 200 x 10 RHS - Cold formed.
Properties (cm): A=92.6 iy=11.1 Wely=754 Wply=921 Iy=11300 It=13000
Welz=606 Wplz=698 Iz=6060 iz=8.09 Wt=1010

Factor about y-y axis	fLy=1
Factor about z-z axis	fLz=1

COLD FORMED	**In accordance with EN 10219-1**	
RECTANGULAR HOLLOW SECTION	**300 x 200 x 10 RHS Grade S 355**	
DESIGN	**Axial compressive load**	**2200 kN**
SUMMARY	**Compression resistance**	**2360.2 kN**
	Unity factor	**0.93213 ≤ 1**

Location: CHS cold formed

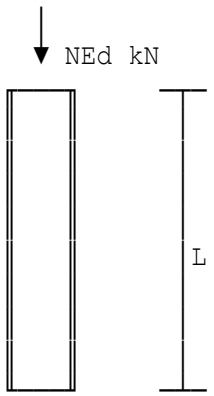

Axially loaded column

Calculations are in accordance with BS EN 1993-1-1:2005.

Compressive load is factored.

Factored axial compressive load	NEd=2200 kN
buckling about major axis	Ly=6000 mm
buckling about minor axis	Lz=3000 mm

323.9 dia x 10 thick CHS - Cold formed.
Properties (cm): A=98.615 iy=11.104 Wely=750.75 Wply=985.67 Iy=12158
It=24317

Factor about y-y axis	fLy=1
Factor about z-z axis	fLz=1

COLD FORMED	**In accordance with EN 10219-1**	
CIRCULAR HOLLOW SECTION	**323.9 OD x 10 CHS Grade S 355**	
DESIGN	**Axial compressive load**	**2200 kN**
SUMMARY	**Compression resistance**	**2521.4 kN**
	Unity factor	**0.87253 ≤ 1**

Location: Column 1-2

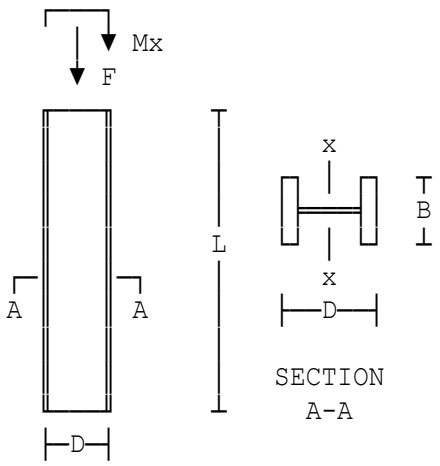

I column in 'simple' construction

Calculations are in accordance with BS5950-1:2000 and 'Steelwork Design Guide to BS5950' published by SCI.

All beams supported by the column are assumed to be fully loaded. Based on Clause 4.7.7 it is not necessary to consider the effect of pattern loading.

Number of storeys	storey=2
Storey height (bottom storey)	Ht=3 m
Storey height (elsewhere)	ht=6 m
Column centres (average)	crs=6 m
Frame centres	frs=5 m
Beam 1	dr1=20 kN
Beam 2	dr2=24 kN
Beam 3	dr3=20 kN
Beam 4	dr4=0 kN
Beam 1	ir1=20 kN
Beam 2	ir2=80 kN
Beam 3	ir3=20 kN
Beam 4	ir4=0 kN
Beam 1	df1=30 kN
Beam 2	df2=30 kN
Beam 3	df3=30 kN
Beam 4	df4=0 kN
Beam 1	if1=100 kN
Beam 2	if2=200 kN
Beam 3	if3=100 kN
Beam 4	if4=0 kN

Assume self weight for the lowest storey of the column. For variations in column heights this value will be proportioned.
Assumed self wt. of column/storey sw=7 kN

203 x 203 x 60 UC.
Young's Modulus E=205 kN/mm²

Assumed eccentricity of beam
loading from column face ecc=100 mm
Effective length factor ef=0.85

SECTION	**203 x 203 x 60 UKC Grade S 275**
	Design strength 275 N/mm²
DESIGN	**Compressive strength 222.18 N/mm²**
SUMMARY	**Buckling strength 275 N/mm²**
	Buckling check 0.85944 ≤ 1
	Section is satisfactory for bending, axial load, and overall buckling.

FIRE RESISTANCE	**Heated perimeter 1223.6 mm²**
SUMMARY	**Area of section 76.4 cm²**
	Section factor 160 /m
	Load ratio (R) 0.46746
	Section does not have an inherent fire resistance of 30 minutes. Fire protection should be provided.

Location: Column 1-2

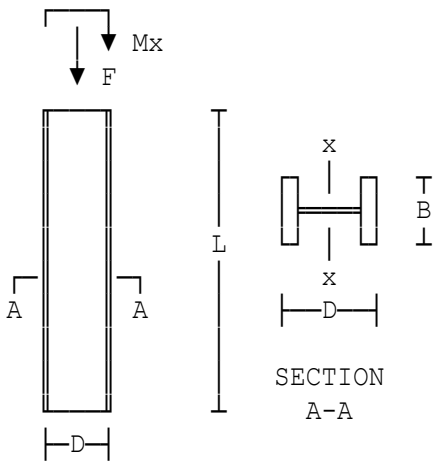

I column in 'simple' construction

Calculations are in accordance with BS5950-1:2000 and 'Steelwork Design Guide to BS5950' published by SCI.

All beams supported by the column are assumed to be fully loaded. Based on Clause 4.7.7 it is not necessary to consider the effect of pattern loading.

Factored axial compressive load	F=993.8 kN
Factored BM about major axis x-x	Mx=26 kNm
Factored BM about minor axis y-y	My=0 kNm
Length between restraints	L=3000 mm

203 x 203 x 60 UC.
Young's Modulus E=205 kN/mm²

Effective length factor ef=0.85

SECTION	**203 x 203 x 60 UKC Grade S 275**
	Design strength 275 N/mm²
DESIGN	**Compressive strength 222.18 N/mm²**
SUMMARY	**Buckling strength 275 N/mm²**
	Buckling check 0.72959 ≤ 1
	Section is satisfactory for bending, axial load, and overall buckling.

Axial compressive load	Ff=549.4 kN
BM about major axis x-x	Mfx=26 kNm
BM about minor axis y-y	Mfy=0 kNm

FIRE RESISTANCE	**Heated perimeter 1223.6 mm²**
SUMMARY	**Area of section 76.4 cm²**
	Section factor 160 /m
	Load ratio (R) 0.46779
	Section does not have an inherent fire resistance of 30 minutes.
	Fire protection should be provided.

Location: Semi-compact column

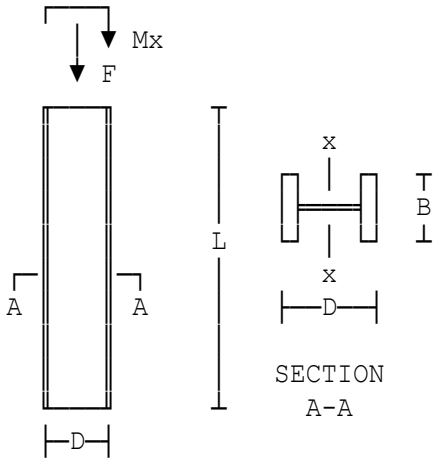

I column in 'simple' construction

Calculations are in accordance with BS5950-1:2000 and 'Steelwork Design Guide to BS5950' published by SCI.

All beams supported by the column are assumed to be fully loaded. Based on Clause 4.7.7 it is not necessary to consider the effect of pattern loading.

Factored axial compressive load	F=525 kN
Factored BM about major axis x-x	Mx=45 kNm
Factored BM about minor axis y-y	My=0 kNm
Length between restraints	L=2500 mm

406 x 140 x 39 UB.
Young's Modulus E=205 kN/mm²

Effective length factor ef=1

SECTION	**406 x 140 x 39 UKB Grade S 275**
	Design strength 275 N/mm²
DESIGN	**Compressive strength 166.62 N/mm²**
SUMMARY	**Buckling strength 253.56 N/mm²**
	Buckling check 0.9024 ≤ 1
	Section is satisfactory for bending, axial load, and overall buckling.

Location: Slender column failing

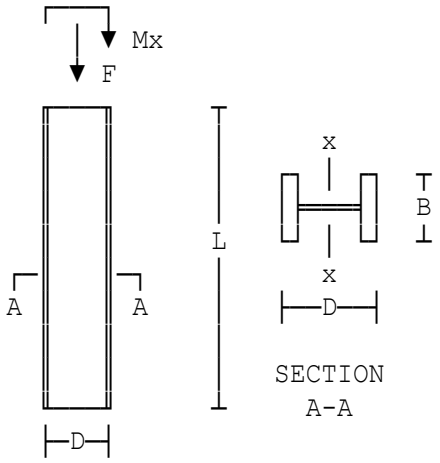

I column in 'simple' construction

Calculations are in accordance with BS5950-1:2000 and 'Steelwork Design Guide to BS5950' published by SCI.

All beams supported by the column are assumed to be fully loaded. Based on Clause 4.7.7 it is not necessary to consider the effect of pattern loading.

Factored axial compressive load	F=1600 kN
Factored BM about major axis x-x	Mx=34 kNm
Factored BM about minor axis y-y	My=2 kNm
Length between restraints	L=1500 mm

457 x 191 x 67 UB.
Young's Modulus E=205 kN/mm²

Effective length factor ef=1

SECTION	**457 x 191 x 67 UKB Grade S 275**
	Design strength 275 N/mm²
DESIGN	**Compressive strength 254.41 N/mm²**
SUMMARY	**Buckling strength 275 N/mm²**
	Buckling check 0.87853 ≤ 1
	Section is satisfactory for bending, axial load, and overall buckling.

Location: Access steel example (with FR check)

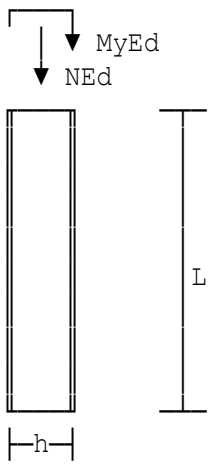

Column in simple construction

Calculations are in accordance with EN 1993-1-1 and EN 1993-1-2.

- Column is continuous and forms part of a structure of simple construction
- Column is nominally pinned at the base
- Beams are connected to the column by "simple" connections.

All loads and moments are factored.

Factored axial compressive load NEd=589 kN
Factored BM about y-y axis MyEd=11.11 kNm
Factored BM about z-z axis MzEd=0.35 kNm
Length between restraints L=5000 mm
203 x 203 x 46 UKC
Dimensions (mm): h=203.2 b=203.6 tw=7.2 tf=11 r=10.2
Properties (cm): Iy=4570 Iz=1550 Wply=497 Wplz=231 It=22.2

SECTION	**203 x 203 x 46 UKC Grade**	**S 275**
DESIGN	**Design axial load**	**589 kN**
SUMMARY	**Buckling resistance**	**764.02 kN**
	Design BM y-y axis	**11.11 kNm**
	LTB resistance	**136.68 kNm**
	Design BM z-z axis	**0.35 kNm**
	Moment resistance (z-z)	**63.525 kNm**
	Unity factor	**0.86048 ≤ 1**

Fire resistance without applied protection

Unfactored permanent axial force Np=200 kN
Unfactored variable axial force Nv=210 kN
Design axial compressive force NfiEd=1.0*Np+1.0*Nv=410 kN

Determine critical temperature of steel in fire situation

Buckling length in fire situation Lfi=3500 mm
Critical temperature θcr tCR=TABLE 253 for mo=0.25399, lamfi
=0.92314
=566.28 °C
Fire resistance period 17 minutes

Interaction of axial loads and moments in fire situation

The interaction of axial compression and bending is given by the following expression (EN 1993-1-2 Clause 4.2.3.5):

Unity expression R=NfiEd/NfiRd+kLT*MfiEdy/MybRd+kz*MfiEdz/MzRd
=0.33058

As R ≤ 1, section capacity is OK for a FR period of 17 minutes.

FIRE RESISTANCE SUMMARY	**The section does not have an inherent fire resistance of 30 minutes. Fire protection should be provided.**

Location: Access steel example

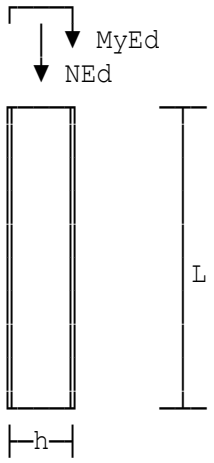

Column in simple construction

Calculations are in accordance with EN 1993-1-1 and EN 1993-1-2.

- Column is continuous and forms part of a structure of simple construction
- Column is nominally pinned at the base
- Beams are connected to the column by "simple" connections.

All loads and moments are factored.

Beam 1	N1=37 kN
Beam 2	N2=147 kN
Beam 3	N3=28 kN
Beam 4	N4=0 kN
Loading from upper floors	N5=377 kN

203 x 203 x 46 UKC
Dimensions (mm): h=203.2 b=203.6 tw=7.2 tf=11 r=10.2
Properties (cm): Iy=4570 Iz=1550 Wply=497 Wplz=231 It=22.2
At level above Lb=3000 mm

SECTION	**203 x 203 x 46 UKC Grade**	**S 275**
DESIGN	**Design axial load**	**589 kN**
SUMMARY	**Buckling resistance**	**764.02 kN**
	Design BM y-y axis	**11.113 kNm**
	LTB resistance	**136.68 kNm**
	Design BM z-z axis	**0.34965 kNm**
	Moment resistance (z-z)	**63.525 kNm**
	Unity factor	**0.86049 ≤ 1**

Location: Corner column intermediate length

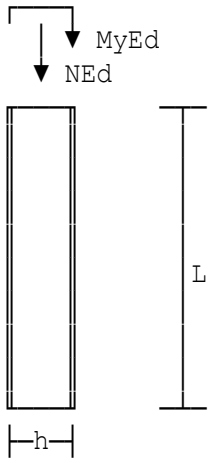

Column in simple construction

Calculations are in accordance with EN 1993-1-1 and EN 1993-1-2.

- Column is continuous and forms part of a structure of simple construction
- Column is nominally pinned at the base
- Beams are connected to the column by "simple" connections.

All loads and moments are factored.

Beam 1	N1=200 kN
Beam 2	N2=300 kN
Beam 3	N3=0 kN
Beam 4	N4=0 kN
Loading from upper floors	N5=1250 kN

254 x 254 x 107 UKC
Dimensions (mm): h=266.7 b=258.8 tw=12.8 tf=20.5 r=12.7
Properties (cm): Iy=17500 Iz=5930 Wply=1480 Wplz=697 It=172

At level above	Lb=4000 mm
Far end BM	psiM=-30 kNm

SECTION	**254 x 254 x 107 UKC Grade S 275**	
DESIGN	**Design axial load**	**1750 kN**
SUMMARY	**Buckling resistance**	**2259.5 kN**
	Design BM y-y axis	**35.003 kNm**
	LTB resistance	**392.2 kNm**
	Design BM z-z axis	**10.64 kNm**
	Moment resistance (z-z)	**184.71 kNm**
	Unity factor	**0.95015 ≤ 1**

Location: Ground to first floor column

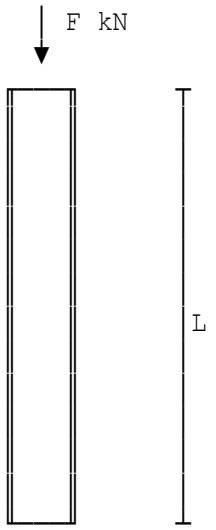

SHS column in 'simple' construction

Calculations are in accordance with BS5950 and 'SHS Design Examples to BS5950' published by British Steel General Steels.

The column is part of simple constr -uction and in accordance with 4.7.7 it is not necessary to consider the effect of pattern loading. All beams supported by the column are assumed to be fully loaded.

It is assumed that all elements of the column remain in compression.

Number of storeys	storey=2
Storey height (bottom storey)	Ht=3.5 m
Storey height (elsewhere)	ht=3 m
Column centres (average)	crs=5 m
Frame centres	frs=5 m
Beam 1	dr1=23 kN
Beam 2	dr2=12.5 kN
Beam 3	dr3=0 kN
Beam 4	dr4=13 kN
Beam 1	ir1=30 kN
Beam 2	ir2=15 kN
Beam 3	ir3=0 kN
Beam 4	ir4=20 kN
Beam 1	df1=41 kN
Beam 2	df2=26 kN
Beam 3	df3=0 kN
Beam 4	df4=26 kN
Beam 1	if1=52 kN
Beam 2	if2=31 kN
Beam 3	if3=0 kN
Beam 4	if4=40 kN

Assume self weight for the lowest storey of the column.
For variations in column heights this value will be proportioned.
Assumed self wt. of column/storey sw=1.65 kN

200 x 100 x 5 RHS - Hot finished.
Properties (cm): A=28.7 rx=7.21 Zx=149 Sx=185 Ix=1500
J=1200 C=172 Zy=101 Sy=114 Iy=505 ry=4.19
Young's Modulus E=205 kN/mm²

Effective length factor ef=0.85
Assumed eccentricity of beam
loading from column face ecc=100 mm

HOT FINISHED	**In accordance with EN 10210**	
RECTANGULAR HOLLOW SECTION	**200 x 100 x 5 RHS Grade S 355**	
SECTION	**Section is satisfactory for axial**	
SUMMARY	**load, buckling resistance and**	
	overall buckling check.	
DESIGN	**Axial compressive load**	**474.39 kN**
SUMMARY	**Compressive resistance**	**764.58 kN**
	Moment about major axis	**14.06 kNm**
	Buckling resistance	**65.675 kNm**
	Moment about minor axis	**1.08 kNm**
	Minor axis resistance	**35.855 kNm**
	Overall buckling check	**0.86466 ≤ 1**

Location: Ground to first floor column - Default example

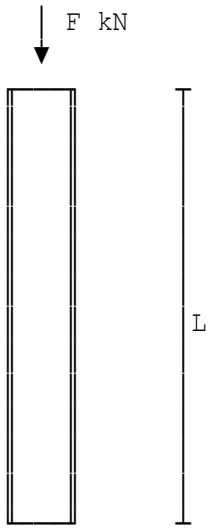

SHS column in 'simple' construction

Calculations are in accordance with BS5950 and 'SHS Design Examples to BS5950' published by British Steel General Steels.

The column is part of simple constr -uction and in accordance with 4.7.7 it is not necessary to consider the effect of pattern loading. All beams supported by the column are assumed to be fully loaded.

It is assumed that all elements of the column remain in compression.

Factored axial compressive load	F=474.39 kN
Factored BM about major axis x-x	Mx=14.06 kNm
Factored BM about minor axis y-y	My=1.08 kNm
Length between restraints	L=3500 mm

200 x 100 x 5 RHS - Hot finished.
Properties (cm): A=28.7 rx=7.21 Zx=149 Sx=185 Ix=1500
J=1200 C=172 Zy=101 Sy=114 Iy=505 ry=4.19
Young's Modulus E=205 kN/mm²

Effective length factor ef=0.85

HOT FINISHED	**In accordance with EN 10210**	
RECTANGULAR HOLLOW SECTION	**200 x 100 x 5 RHS Grade S 355**	
SECTION SUMMARY	**Section is satisfactory for axial load, buckling resistance and overall buckling check.**	
DESIGN SUMMARY	**Axial compressive load**	**474.39 kN**
	Compressive resistance	**764.58 kN**
	Moment about major axis	**14.06 kNm**
	Buckling resistance	**65.675 kNm**
	Moment about minor axis	**1.08 kNm**
	Minor axis resistance	**35.855 kNm**
	Overall buckling check	**0.86466 ≤ 1**

Location: Bending about x-x axis only

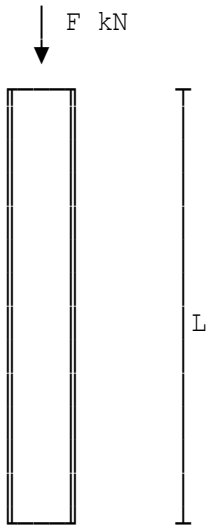

SHS column in 'simple' construction

Calculations are in accordance with BS5950 and 'SHS Design Examples to BS5950' published by British Steel General Steels.

The column is part of simple constr -uction and in accordance with 4.7.7 it is not necessary to consider the effect of pattern loading. All beams supported by the column are assumed to be fully loaded.

It is assumed that all elements of the column remain in compression.

Factored axial compressive load	F=1800 kN
Factored BM about major axis x-x	Mx=34 kNm
Factored BM about minor axis y-y	My=0 kNm
Length between restraints	L=6000 mm

300 x 200 x 8 RHS - Hot finished.
Properties (cm): A=76.8 rx=11.3 Zx=648 Sx=779 Ix=9720
J=10600 C=840 Zy=518 Sy=589 Iy=5180 ry=8.22
Young's Modulus E=205 kN/mm²

Effective length factor ef=0.85

HOT FINISHED	**In accordance with EN 10210**	
RECTANGULAR HOLLOW SECTION	**300 x 200 x 8 RHS Grade S 355**	
SECTION SUMMARY	**Section is satisfactory for axial load, buckling resistance and overall buckling check.**	
DESIGN SUMMARY	**Axial compressive load**	**1800 kN**
	Compressive resistance	**2249.4 kN**
	Moment about major axis	**34 kNm**
	Buckling resistance	**276.55 kNm**
	Overall buckling check	**0.92316 ≤ 1**

Location:

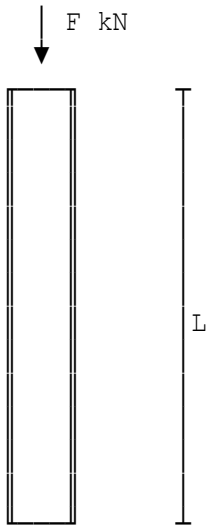

SHS column in 'simple' construction

Calculations are in accordance with BS5950 and 'SHS Design Examples to BS5950' published by British Steel General Steels.

The column is part of simple constr -uction and in accordance with 4.7.7 it is not necessary to consider the effect of pattern loading. All beams supported by the column are assumed to be fully loaded.

It is assumed that all elements of the column remain in compression.

Factored axial compressive load	F=1500 kN
Factored BM about major axis x-x	Mx=0 kNm
Factored BM about minor axis y-y	My=12 kNm
Length between restraints	L=6000 mm

300 x 200 x 8 RHS - Cold formed.
Properties (cm): A=75.2 rx=11.2 Zx=626 Sx=757 Ix=9390
J=10600 C=838 Zy=504 Sy=574 Iy=5040 ry=8.19
Young's Modulus E=205 kN/mm²

Effective length factor ef=0.85

COLD FORMED	**In accordance with EN 10219**	
RECTANGULAR HOLLOW SECTION	**300 x 200 x 8 RHS Grade S 355**	
SECTION	**Section is satisfactory for axial**	
SUMMARY	**load, buckling resistance and**	
	overall buckling check.	
DESIGN	**Axial compressive load**	**1500 kN**
SUMMARY	**Compressive resistance**	**1803.6 kN**
	Moment about minor axis	**12 kNm**
	Minor axis resistance	**178.92 kNm**
	Overall buckling check	**0.89874 ≤ 1**

Location: CHS section - biaxial bending

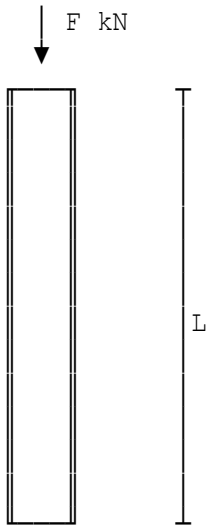

SHS column in 'simple' construction

Calculations are in accordance with BS5950 and 'SHS Design Examples to BS5950' published by British Steel General Steels.

The column is part of simple constr -uction and in accordance with 4.7.7 it is not necessary to consider the effect of pattern loading. All beams supported by the column are assumed to be fully loaded.

It is assumed that all elements of the column remain in compression.

Factored axial compressive load	F=1300 kN
Factored BM about major axis x-x	Mx=24 kNm
Factored BM about minor axis y-y	My=12 kNm
Length between restraints	L=6000 mm

244.5 dia x 8 thick CHS - Hot finished.
Properties (cm): A=59.439 r=8.3663 Z=340.32 S=447.63 I=4160.4

Young's Modulus	E=205 kN/mm²
Effective length factor	ef=0.85

HOT FINISHED	**In accordance with EN 10210**	
CIRCULAR HOLLOW SECTION	**244.5.D. x 8 CHS Grade S 355**	
SECTION	**Section is satisfactory for axial**	
SUMMARY	**load, buckling resistance and**	
	overall buckling check.	
DESIGN	**Axial compressive load**	**1300 kN**
SUMMARY	**Compressive resistance**	**1757.4 kN**
	Moment about major axis	**24 kNm**
	Buckling resistance	**158.91 kNm**
	Moment about minor axis	**12 kNm**
	Overall buckling check	**0.96629 ≤ 1**

Location: Ground to first floor column

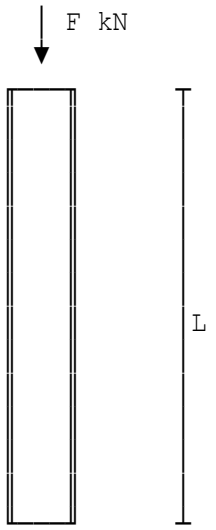

SHS column in 'simple' construction

Calculations are in accordance with BS5950 and 'SHS Design Examples to BS5950' published by British Steel General Steels.

The column is part of simple constr -uction and in accordance with 4.7.7 it is not necessary to consider the effect of pattern loading. All beams supported by the column are assumed to be fully loaded.

It is assumed that all elements of the column remain in compression.

Number of storeys	storey=2
Storey height (bottom storey)	Ht=3.5 m
Storey height (elsewhere)	ht=3 m
Column centres (average)	crs=5 m
Frame centres	frs=5 m
Beam 1	dr1=23 kN
Beam 2	dr2=12.5 kN
Beam 3	dr3=0 kN
Beam 4	dr4=13 kN
Beam 1	ir1=30 kN
Beam 2	ir2=15 kN
Beam 3	ir3=0 kN
Beam 4	ir4=20 kN
Beam 1	df1=41 kN
Beam 2	df2=26 kN
Beam 3	df3=0 kN
Beam 4	df4=26 kN
Beam 1	if1=52 kN
Beam 2	if2=31 kN
Beam 3	if3=0 kN
Beam 4	if4=40 kN

Assume self weight for the lowest storey of the column.
For variations in column heights this value will be proportioned.
Assumed self wt. of column/storey sw=1.65 kN

200 x 100 x 5 RHS - Hot finished.
Properties (cm): A=28.7 rx=7.21 Zx=149 Sx=185 Ix=1500
J=1200 C=172 Zy=101 Sy=114 Iy=505 ry=4.19
Young's Modulus E=205 kN/mm²

Effective length factor ef=0.85
Assumed eccentricity of beam
loading from column face ecc=100 mm

HOT FINISHED	**In accordance with EN 10210**	
RECTANGULAR HOLLOW SECTION	**200 x 100 x 5 RHS Grade S 355**	
SECTION	**Section is satisfactory for axial**	
SUMMARY	**load, buckling resistance and**	
	overall buckling check.	
DESIGN	**Axial compressive load**	**474.39 kN**
SUMMARY	**Compressive resistance**	**764.58 kN**
	Moment about major axis	**14.06 kNm**
	Buckling resistance	**65.675 kNm**
	Moment about minor axis	**1.08 kNm**
	Minor axis resistance	**35.855 kNm**
	Overall buckling check	**0.86466 ≤ 1**

FIRE RESISTANCE	**Heated perimeter**	**500 mm²**
SUMMARY	**Area of section**	**28.7 cm²**
	Section factor	**170 /m**
	Load ratio (R)	**0.50778**
	Section does not have an inherent	
	fire resistance of 30 minutes.	
	Fire protection should be provided.	

Location: SCI example (SHS)

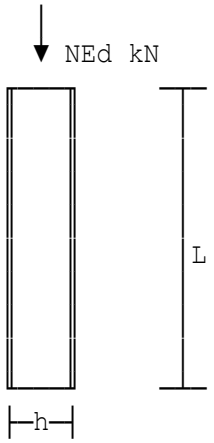

Column in simple construction

Calculations are in accordance with EN 1993-1-1 and EN 1993-1-2.

- Column is continuous and forms part of a structure of simple construction
- Column is nominally pinned at the base
- Beams are connected to the column by "simple" connections

All loads and moments are factored.

Beam 1	N1=95 kN
Beam 2	N2=130 kN
Beam 3	N3=80 kN
Beam 4	N4=0 kN
Loading from upper floors	N5=165 kN

150 x 150 x 5 SHS - Hot finished.
Properties (cm): A=28.7 iy=5.9 Wely=134 Wply=156 Iy=1000 It=1550
Wt=197
At level above Lb=3000 mm

HOT FINISHED	**In accordance with EN 10210**	
SQUARE HOLLOW SECTION	**150 x 150 x 5 SHS Grade S 355**	
DESIGN	**Design axial load**	**470 kN**
SUMMARY	**Buckling resistance**	**824.38 kN**
	Design BM y-y axis	**11.375 kNm**
	Moment resistance (y-y)	**55.38 kNm**
	Design BM z-z axis	**1.3125 kNm**
	Moment resistance (z-z)	**55.38 kNm**
	Unity factor	**0.81108 ≤ 1**

Fire resistance without applied protection

Unfactored permanent axial force	Np=150 kN
Unfactored variable axial force	Nv=150 kN
Design axial compressive force	NfiEd=1.0*Np+1.0*Nv=300 kN

Determine critical temperature of steel in fire situation

Buckling length in fire situation	Lfi=2450 mm
Critical temperature θcr	tCR=TABLE 254 for mo=0.29445, lamfi =0.63945 =598.71 °C
Fire resistance period	18 minutes

Interaction of axial loads and moments in fire situation

The interaction of axial compression and bending is given by the following expression (EN 1993-1-2 Clause 4.2.3.5):

Unity expression R=NfiEd/NfiRd+kLT*MfiEdy/MybRd+kz*MfiEdz/MzRd
=0.51012

As R ≤ 1, section capacity is OK for a FR period of 18 minutes.

FIRE RESISTANCE SUMMARY	**The section does not have an inherent fire resistance of 30 minutes. Fire protection should be provided.**

Location: RHS example (SHS)

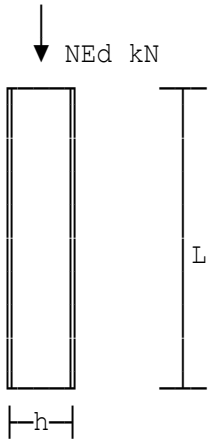

Column in simple construction

Calculations are in accordance with EN 1993-1-1 and EN 1993-1-2.

- Column is continuous and forms part of a structure of simple construction
- Column is nominally pinned at the base
- Beams are connected to the column by "simple" connections

All loads and moments are factored.

Beam 1	N1=37 kN
Beam 2	N2=147 kN
Beam 3	N3=28 kN
Beam 4	N4=0 kN
Loading from upper floors	N5=377 kN

WARNING:
Section unknown.
300 x 150 x 10 RHS - Hot finished.
Properties (cm): A=82.001 iz=6.1149 Wely=595.5 Wply=760.01 Iy=8915.1
It=6619.9 Wt=629.5 Welz=370 Wplz=431 Iz=2899.9 iy
=10.575
At level above Lb=3000 mm

HOT FINISHED	**In accordance with EN 10210**	
RECTANGULAR HOLLOW SECTION	**300 x 150 x 10 RHS Grade S 355**	
DESIGN	**Design axial load**	**589 kN**
SUMMARY	**Buckling resistance**	**1734.3 kN**
	Design BM y-y axis	**13.781 kNm**
	Moment resistance (y-y)	**269.8 kNm**
	Design BM z-z axis	**0.59063 kNm**
	Moment resistance (z-z)	**153 kNm**
	Unity factor	**0.3965 ≤ 1**

Location: Corner column intermediate length (CHS)

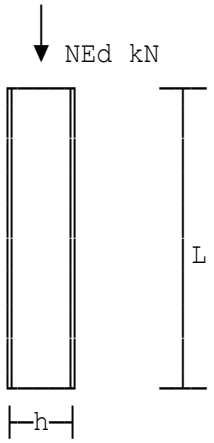

Column in simple construction

Calculations are in accordance with EN 1993-1-1 and EN 1993-1-2.

- Column is continuous and forms part of a structure of simple construction
- Column is nominally pinned at the base
- Beams are connected to the column by "simple" connections

All loads and moments are factored.

Factored axial compressive load NEd=1200 kN
Factored BM about y-y axis MyEd=56 kNm
Factored BM about z-z axis MzEd=56 kNm
Length between restraints L=5000 mm
323.9 dia x 8 thick CHS - Hot finished.
Properties (cm): A=79.394 iy=11.172 Wely=611.92 Wply=798.51 Iy=9910.1
It=19820
Far end BM psiM=-56 kNm

HOT FINISHED	**In accordance with EN 10210**	
CIRCULAR HOLLOW SECTION	**323.9 O.D. x 8 CHS Grade S 355**	
DESIGN	**Design axial load**	**1200 kN**
SUMMARY	**Buckling resistance**	**2523.5 kN**
	Design BM y-y axis	**56 kNm**
	Moment resistance (y-y)	**283.47 kNm**
	Design BM z-z axis	**56 kNm**
	Moment resistance (z-z)	**283.47 kNm**
	Unity factor	**0.96941 ≤ 1**

Location: Default example

Simply supported steel beam

Calculations in accordance with BS5950-1:2000.

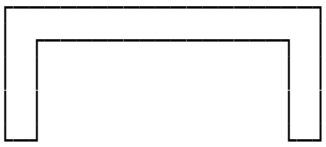

compression

tension

Channel section bending about minor axis

Beam span	L=5.2 m
432 x 102 Tapered Channel.	
Young's Modulus	E=205 kN/mm²
Dist. from left support to start	Lau(1)=0 m
Distance from left support to end	Lbu(1)=5.2 m
Dead load (unfactored)	Gku(1)=4 kN/m
Imposed load (unfactored)	Qku(1)=1 kN/m
Maximum span bending moment	24.336 kNm
Design shear force	Fv=18.72 kN

CHANNEL	**432 x 102**	
SECTION	**Tapered flange Channel Grade S 275**	
DESIGN	**Shear force**	**18.72 kN**
SUMMARY	**Shear capacity**	**488.51 kN**
	Maximum moment	**24.336 kNm**
	Moment capacity	**25.472 kNm**
	Deflection due to IL	**7.4068 mm**
	Limiting deflection	**26 mm**
Unfactored end shears	**DL shear at LHE**	**10.4 kN**
	LL shear at LHE	**2.6 kN**
	DL shear at RHE	**10.4 kN**
	LL shear at RHE	**2.6 kN**

Location: Example using parallel flange channel

Simply supported steel beam

Calculations in accordance with BS5950-1:2000.

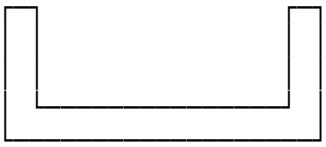

compression

tension

Channel section bending about minor axis

Beam span	L=5.2 m

430 x 100 Parallel Flange Channel.

Young's Modulus	E=205 kN/mm²
Dist. from left support to start	Lau(1)=0 m
Distance from left support to end	Lbu(1)=5 m
Dead load (unfactored)	Gku(1)=4 kN/m
Imposed load (unfactored)	Qku(1)=1 kN/m
Maximum span bending moment	24.264 kNm
Design shear force	Fv=18.692 kN

CHANNEL	**430 x 100**	
SECTION	**Parallel flange Channel Grade S 275**	
DESIGN	**Shear force**	**18.692 kN**
SUMMARY	**Shear capacity**	**543.78 kN**
	Maximum moment	**24.264 kNm**
	Moment capacity	**31.132 kNm**
	Deflection due to IL	**6.4094 mm**
	Limiting deflection	**26 mm**
Unfactored end shears	**DL shear at LHE**	**10.385 kN**
	LL shear at LHE	**2.5962 kN**
	DL shear at RHE	**9.6154 kN**
	LL shear at RHE	**2.4038 kN**

Location: Ex1 - Default example

Simply supported steel beam

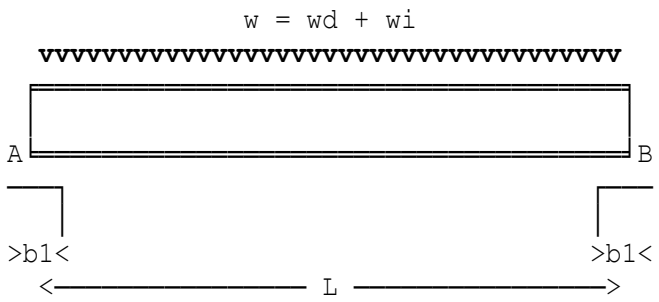

Simply supported beam

restrained at ends

where suffices:
d denotes permanent load
i denotes variable load

Beam span	L=5.2 m
Permanent UDL (including S.W.)	wd=4 kN/m
Variable UDL	wi=1 kN/m

Channel orientation

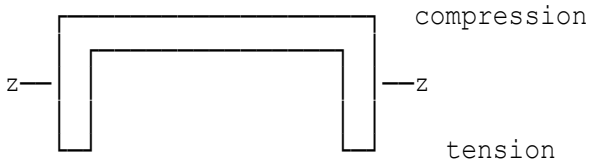

Channel section bending

about minor axis zz

432 x 102 Tapered Channel.

CHANNEL	**432 x 102**
SECTION	**Tapered flange Channel Grade S 275**
DESIGN	**Design shear force 17.94 kN**
SUMMARY	**Shear resistance 470.07 kN**
	Design moment 23.322 kNm
	Moment resistance 40.545 kNm
	Var.load deflection 7.2304 mm
	Limiting deflection 26 mm
	Design shear at LHE 17.94 kN
	Design shear at RHE 17.94 kN

Location: Ex2 - Example using parallel flange channel

Simply supported steel beam

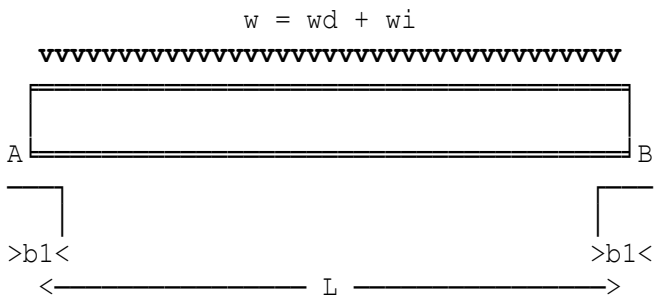

Simply supported beam

restrained at ends

where suffices:
d denotes permanent load
i denotes variable load

Beam span	L=5.2 m
Permanent UDL (including S.W.)	wd=4 kN/m
Variable UDL	wi=1 kN/m

Channel orientation

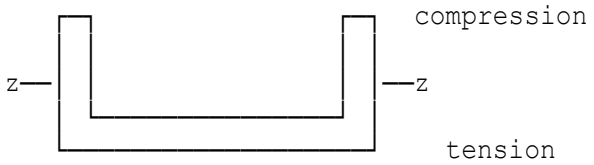

Channel section bending

about minor axis zz

430 x 100 UKPFC

CHANNEL	**430 x 100 UKPFC**	
SECTION	**Parallel flange Channel Grade S 275**	
DESIGN	**Design shear force**	**17.94 kN**
SUMMARY	**Shear resistance**	**523.25 kN**
	Design moment	**23.322 kNm**
	Moment resistance	**46.64 kNm**
	Var.load deflection	**6.2791 mm**
	Limiting deflection	**26 mm**
	Design shear at LHE	**17.94 kN**
	Design shear at RHE	**17.94 kN**

Location: Ex1 - Staircase with flat plate stringers

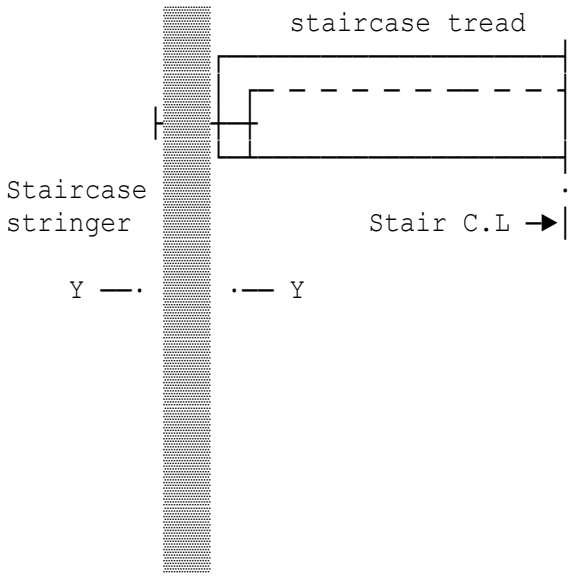

Flat plate stringer

Calculations are in accordance with EC3 Part 1-1:2005

crs = stringer centres

Y-Y = major axis

Z-Z = minor axis

L = Stringer span

Stringer span	L=4.5 m
Distance between stringers	crs=2 m
Depth of stringer	h=220 mm
Thickness of plate stringer	t=15 mm
Permanent action partial factor	gamG=1.35
Variable action partial factor	gamQ=1.5

Staircase loading

Characteristic permanent load	wkp=1.7 kN/m²
Characteristic variable load	wkv=4 kN/m²
Char permanent load on stringer	Wkp=Wks+wkp*crs*L/2=8.8157 kN
Char variable load on stringer	Wkv=wkv*crs*L/2=18 kN

Design load on stringer:

Wy=gamG*Wks+(gamG*wkp+gamQ*wkv)*crs*L/2=38.901 kN

Design moment and shear

Design moment (at centre)	MyEd=Wy*L/8=21.882 kNm
Design shear (at ends)	VyEd=Wy/2=19.451 kN

Design shear resistance

Shear resistance VplRdy=Av*(fy/3^0.5)/(gamM0*1000)
=471.55 kN

Since VyEd ≤ VplRdy (19.451 kN ≤ 471.55 kN) design shear force in web is within the shear resistance.

Design moment resistance

(BS EN 1993-1-1, Clause 6.2.5(2))
Design moment resistance McRd=Wel*fy/(gamM0*10^3)=33.275 kNm
Since MyEd ≤ McRd (21.882 kNm ≤ 33.275 kNm) section is satisfactory.

Lateral torsional buckling check

(BS EN 1993-1-1, Clause 6.3.2.2(1))
The buckling resistance of the stringer over a buckling length equal to the tread spacing will be evaluated here, assuming Class 3 stringer. Refer to SCI AD 391 for further clarification as BS EN 1993-1-1 does not explicitly cover LTB of rectangular plates.
Tread spacing Ltr=300 mm
Design buckling resistance moment MbRd=chiLT*Wel*fy/(gamM1*10^3)
=27.249 kNm
Since MyEd ≤ MbRd (21.882 kNm ≤ 27.249 kNm) section is satisfactory.

Check for deflection under serviceability loads

Variable load deflection DEL=5*Wkv*L^3*10^8/(384*E*Iy)=7.641 mm
Total stringer deflection dTotal=DEL*Wkp/Wkv+DEL=11.383
Limiting deflection (var. load) DELlim=L*1000/360=12.5 mm
Limiting deflection (total load) DELlim=L*1000/250=18 mm
Since DEL ≤ DELlim (7.641 mm ≤ 12.5 mm) deflection within limiting value for imposed loading only.

FLAT PLATE STRINGER	**220 x 15 Flat plate, Grade S 275**	
DESIGN SUMMARY	**Design shear force**	**19.451 kN**
	Shear resistance	**471.55 kN**
	Design moment	**21.882 kNm**
	Buckling resistance BM	**27.249 kNm**
	Variable load deflection	**7.641 mm**
	Total load deflection	**11.383 mm**
	Limiting deflection	**12.5 mm**

Location: Example 10, 'Steelwork Design Guide'

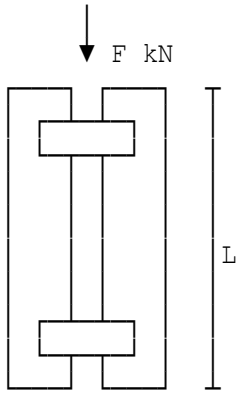

Axially loaded struts

Calculations are in accordance with BS5950-1:2000 and 'Steelwork Design Guide to BS5950' published by The Steel Construction Institute.

Compressive load is factored and length between restraints is the same for both axes.

Factored axial compressive load	F=910 kN
Overall length	L=8 m
203 x 76 Tapered Channel.	
Young's Modulus	E=205 kN/mm²
Overall width combined elements	s=300 mm
Effective length factor (y axis)	efy=1
Effective length factor (x axis)	efx=0.85
Width of lacings	bl=40 mm
Thickness of lacing	tl=8 mm
Inclined angle of lacing	ang=45°
Length of batten	leng=260 mm
Width of batten	bb=260 mm
Thickness of batten	tb=6 mm

TAPERED FLANGE CHANNEL	**2/203 x 76 Grade S 275**	
DESIGN	**Axial compressive load**	**910 kN**
SUMMARY	**Compression resistance**	**924.21 kN**
LACINGS	**40 mm x 8 mm plate**	
	at 45 degrees to horizontal	
TIE BATTENS	**260 mm x 260 mm x 6 mm plate**	

Location: Example 11, 'Steelwork Design Guide'

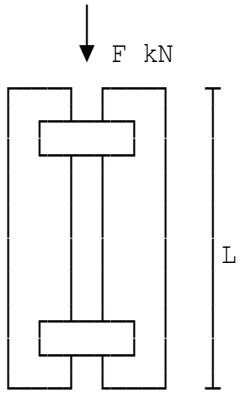

Axially loaded struts

Calculations are in accordance with BS5950-1:2000 and 'Steelwork Design Guide to BS5950' published by The Steel Construction Institute.

Compressive load is factored and length between restraints is the same for both axes.

Factored axial compressive load	F=906 kN
Overall length	L=8 m
203 x 76 Tapered Channel.	
Young's Modulus	E=205 kN/mm²
Overall width combined elements	s=300 mm
Effective length factor (y axis)	efy=1
Effective length factor (x axis)	efx=0.85
Assumed spacing of battens	l=1000 mm
Length of batten	a'=260 mm
Width of batten	bwe=260 mm
Thickness of batten	tb=6 mm
Width of batten	bwi=160 mm

TAPERED FLANGE CHANNEL		**2/203 x 76 Grade S 275**	
DESIGN		**Axial compressive load**	**906 kN**
SUMMARY		**Compression resistance**	**924.21 kN**
BATTENS	**End**	**260 mm x 260 mm x 6 mm plate**	
	Intermediate	**260 mm x 160 mm x 6 mm plate**	
		Centres	**1000 mm**

Location: Example using UB sections

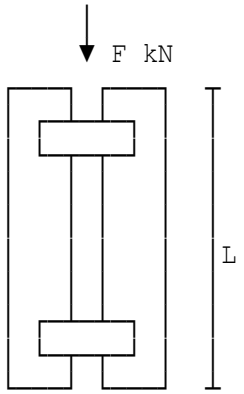

Axially loaded struts

Calculations are in accordance with BS5950-1:2000 and 'Steelwork Design Guide to BS5950' published by The Steel Construction Institute.

Compressive load is factored and length between restraints is the same for both axes.

Factored axial compressive load	F=850 kN
Overall length	L=6.5 m
305 x 102 x 28 UB.	
Young's Modulus	E=205 kN/mm²
Overall width combined elements	s=300 mm
Effective length factor (y axis)	efy=1.5
Effective length factor (x axis)	efx=1.5
Width of lacings	bl=50 mm
Thickness of lacing	tl=6 mm
Inclined angle of lacing	ang=45°
Length of batten	leng=200 mm
Width of batten	bb=210 mm
Thickness of batten	tb=6 mm

UNIVERSAL BEAM	**2/305 x 102 x 28 UB's Grade S 275**
DESIGN	**Axial compressive load 850 kN**
SUMMARY	**Compression resistance 920.56 kN**
LACINGS	**50 mm x 6 mm plate**
	at 45 degrees to horizontal
TIE BATTENS	**210 mm x 200 mm x 6 mm plate**

Location: Example using parallel flange channels

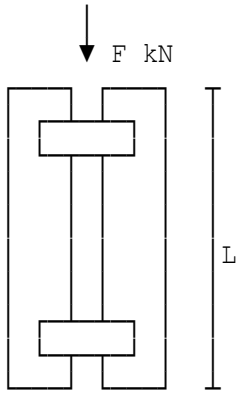

Axially loaded struts

Calculations are in accordance with BS5950-1:2000 and 'Steelwork Design Guide to BS5950' published by The Steel Construction Institute.

Compressive load is factored and length between restraints is the same for both axes.

Factored axial compressive load	F=3400 kN
Overall length	L=8 m

430 x 100 Parallel Flange Channel.

Young's Modulus	E=205 kN/mm²
Overall width combined elements	s=470 mm
Effective length factor (y axis)	efy=1
Effective length factor (x axis)	efx=1
Width of lacings	bl=50 mm
Thickness of lacing	tl=15 mm
Inclined angle of lacing	ang=45°
Length of batten	leng=350 mm
Width of batten	bb=325 mm
Thickness of batten	tb=8 mm

PARALLEL FLANGE CHANNEL	**2/430 x 100 Grade S 275**	
DESIGN	**Axial compressive load**	**3400 kN**
SUMMARY	**Compression resistance**	**3849.4 kN**
LACINGS	**50 mm x 15 mm plate at 45 degrees to horizontal**	
TIE BATTENS	**325 mm x 350 mm x 8 mm plate**	

Location: Ex1 -'Steelwork Design Guide' Ex10, lacings on two sides

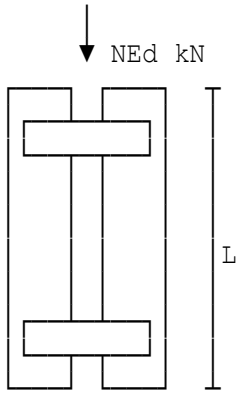

Axially loaded struts

Calculations are in accordance with EC3 Part 1-1:2005.

Compression load is factored and length between restraints is the same for both yy and zz axes.

Design axial compressive load	NEd=910 kN
Overall length	L=8 m

200 x 75 UKPFC
Dimensions (mm): h=200 b=75 tw=6 tf=12.5 r=12
Properties (cm): Iy=1960 Iz=170 Wply=227 Wplz=60.6 It=11.1

Overall width combined elements	s=300 mm
Effective length factor (yy axis)	effy=0.85
Effective length factor (zz axis)	effz=1
Inclined angle of lacing	ang=45°
Width of lacings	bl=40 mm
Thickness of lacing	tl=8 mm
Length of batten	leng=260 mm
Width of batten	bb=260 mm
Thickness of batten	tb=8 mm

TAPERED FLANGE CHANNEL	**2/200 x 75 Grade S 275**	
DESIGN SUMMARY	**Applied compressive load**	**910 kN**
	Design compressive load	**927.05 kN**
	Compression resistance	**1155.5 kN**
LACINGS	**40 mm x 8 mm plate**	
	at 45 degrees to horizontal	
TIE BATTENS AT ENDS	**260 mm x 260 mm x 8 mm plate**	

Location: Ex2 - 'Steelwork Design Guide' Ex11, battens on two sides

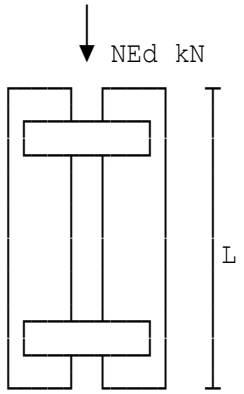

Axially loaded struts

Calculations are in accordance with EC3 Part 1-1:2005.

Compression load is factored and length between restraints is the same for both yy and zz axes.

Design axial compressive load	NEd=906 kN
Overall length	L=8 m

200 x 75 UKPFC
Dimensions (mm): h=200 b=75 tw=6 tf=12.5 r=12
Properties (cm): Iy=1960 Iz=170 Wply=227 Wplz=60.6 It=11.1

Overall width combined elements	s=300 mm
Effective length factor (yy axis)	effy=0.85
Effective length factor (zz axis)	effz=1
Length of end batten	a'=260 mm
Width of end batten	bwe=260 mm
Thickness of end batten	tb=8 mm
Intermediate batten width	bwi=160 mm
Spacing of battens	a=1000 mm

TAPERED FLANGE CHANNEL	**2/200 x 75 Grade S 275**	
DESIGN SUMMARY	**Applied compressive load**	**906 kN**
	Design compressive load	**925.12 kN**
	Compression resistance	**1168.8 kN**

BATTENS	**End**	**260 mm x 260 mm x 8 mm plate**
	Intermediate	**260 mm x 160 mm x 8 mm plate**
	Centres	**1000 mm**

Location: Ex3 - UB sections with lacings on two sides

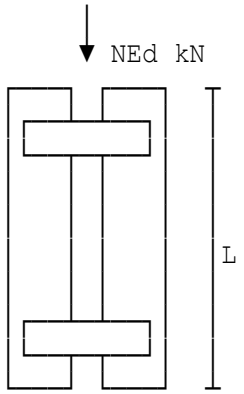

Axially loaded struts

Calculations are in accordance with EC3 Part 1-1:2005.

Compression load is factored and length between restraints is the same for both yy and zz axes.

Design axial compressive load	NEd=850 kN
Overall length	L=6.5 m

305 x 127 x 37 UKB
Dimensions (mm): h=304.4 b=123.4 tw=7.1 tf=10.7 r=8.9
Properties (cm): Iy=7170 Iz=336 Wply=539 Wplz=85.4 It=14.8

Overall width combined elements	s=300 mm
Effective length factor (yy axis)	effy=1.5
Effective length factor (zz axis)	effz=1.5
Inclined angle of lacing	ang=45°
Width of lacings	bl=50 mm
Thickness of lacing	tl=6 mm
Length of batten	leng=200 mm
Width of batten	bb=250 mm
Thickness of batten	tb=8 mm

UNIVERSAL BEAM	**2/305 x 127 x 37 UB's Grade S 275**
DESIGN SUMMARY	**Applied compressive load 850 kN**
	Design compressive load 877.73 kN
	Compression resistance 1040.7 kN
LACINGS	**50 mm x 6 mm plate**
	at 45 degrees to horizontal
TIE BATTENS AT ENDS	**250 mm x 200 mm x 8 mm plate**

Location: Ex4 - Parallel flange channels (PFC), lacings on two sides

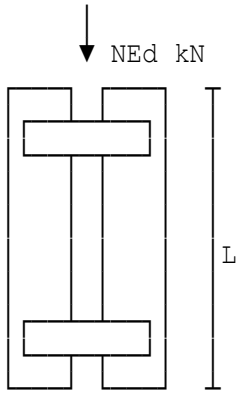

Axially loaded struts

Calculations are in accordance with EC3 Part 1-1:2005.

Compression load is factored and length between restraints is the same for both yy and zz axes.

Design axial compressive load NEd=3400 kN
Overall length L=8 m

Dimensions (mm): h=430 b=100 tw=11 tf=19 r=15
Properties (cm): Iy=21900 Iz=721 Wply=1220 Wplz=165 It=63
Overall width combined elements s=470 mm
Effective length factor (yy axis) effy=1
Effective length factor (zz axis) effz=1
Inclined angle of lacing ang=45°
Width of lacings bl=50 mm
Thickness of lacing tl=15 mm
Length of batten leng=350 mm
Width of batten bb=325 mm
Thickness of batten tb=10 mm

PARALLEL FLANGE CHANNEL	**2/430 x 100 Grade S 275**	
	tw=11 mm tf=19 mm r=15 mm	
DESIGN SUMMARY	**Applied compressive load**	**3400 kN**
	Design compressive load	**3446.7 kN**
	Compression resistance	**3510.8 kN**
LACINGS	**50 mm x 15 mm plate**	
	at 45 degrees to horizontal	
TIE BATTENS AT ENDS	**325 mm x 350 mm x 10 mm plate**	

Location: Example 3 'Design of Curved Steel'

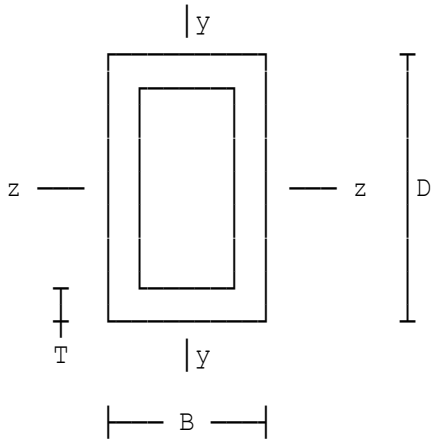

Structural hollow section design

Section is curved in elevation. Calculations are in accordance with BS5950:Part 1:2000 and SCI publication entitled "Design of Curved Steel". All loads and moments are factored.

Factored bending moment axis zz Mz'=7 kNm
Factored SF in y direction Fv=2 kN
Axial load (+ve is compression) F=621 kN
Length of member L=3.264 m
180 x 180 x 6.3 SHS - Hot finished.
Properties (cm): A=43.3 rx=7.07 Zx=241 Sx=281 Ix=2170 J=3360 C=355
Radius of curvature of beam R=55 m
Young's Modulus E=205 kN/mm²

Length between restraints z axis Lz=3264 mm
Length between restraints y axis Ly=3264 mm

HOT FINISHED
SQUARE HOLLOW SECTION
DESIGN SUMMARY

In accordance with EN 10210
180 x 180 x 6.3 SHS Grade S 355
Section is satisfactory for axial load, and overall buckling check.

Axial load	**621 kN**
Compression resistance	**1372.9 kN**
Factored shear force	**2 kN**
Shear capacity	**461.15 kN**
Maximum moment z axis	**22.036 kNm**
Moment capacity	**97.361 kNm**
Local capacity check	**0.64026 ≤ 1**
Overall buckling checks	**0.71622 ≤ 1**
	0.67865 ≤ 1

Location: Based on example 1

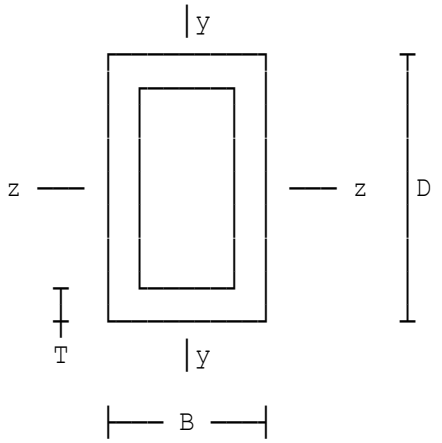

Structural hollow section design

Section is curved in elevation. Calculations are in accordance with BS5950:Part 1:2000 and SCI publication entitled "Design of Curved Steel". All loads and moments are factored.

Factored bending moment axis zz Mz'=546 kNm
Factored SF in y direction Fv=155 kN
Axial load (+ve is compression) F=0 kN
Length of member L=5 m
450 x 250 x 10 RHS - Hot finished.
Properties (cm): A=135 rx=16.5 Zx=1640 Sx=2000 Ix=36900
J=33300 C=1990 Zy=1190 Sy=1330 Iy=14800 ry=10.5
Radius of curvature of beam R=17.05 m
Young's Modulus E=205 kN/mm²

Dist. betwn torsional restraints LT=5 m

HOT FINISHED **In accordance with EN 10210**
RECTANGULAR HOLLOW SECTION **450 x 250 x 10 RHS Grade S 355**
DESIGN SUMMARY **Section is satisfactory for axial load, and overall buckling check.**

Factored shear force	**155 kN**
Shear capacity	**1848.5 kN**
Maximum moment z axis	**546 kNm**
Moment capacity	**603.3 kNm**

HOT FINISHED **In accordance with EN 10210**
RECTANGULAR HOLLOW SECTION **450 x 250 x 10 RHS Grade S 355**
DESIGN SUMMARY **Section is satisfactory for axial load, and overall buckling check.**

Factored shear force	**155 kN**
Shear capacity	**1848.5 kN**
Maximum moment z axis	**546 kNm**
Moment capacity	**603.3 kNm**

Location: Ex1 - Based on 'Design of Curved Steel' Example 3

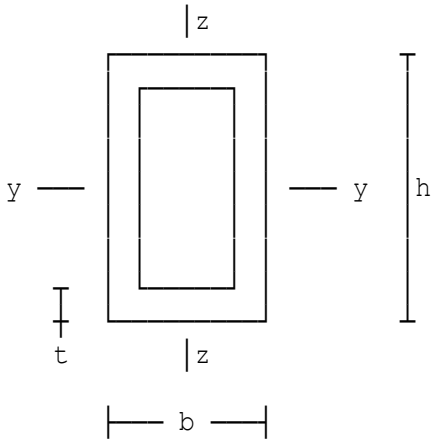

Structural hollow section design

Section is curved in elevation and calculations are in accordance with BS EN 1993-1-1:2005. All loads and moments are factored.

In the calculations the length of member (L) refers to the segment length of beam to be designed.

Design moment about y-y axis MyEd'=7 kNm
Design SF in z direction VzEd=2 kN
Design axial load (comp.positive) NEd=621 kN
Length of member L=3.264 m
180 x 180 x 6.3 SHS - Hot finished.
Properties (cm): A=43.3 iy=7.07 Wely=241 Wply=281 Iy=2170 It=3360
Wt=355
Radius of curvature of beam R=55 m
Effective length for LTB LT=3.264 m
Effective length parameter K=1
Correction factor kc=1

Length between restraints yy axis Ly=3.264 m
Length between restraints zz axis Lz=3.264 m
Maximum end moment Mh(1)=22 kNm
Maximum span moment Ms(1)=22 kNm
End moment pMh(1)=22 kNm

HOT FINISHED
SQUARE HOLLOW SECTION
DESIGN SUMMARY

In accordance with EN 10210
180 x 180 x 6.3 SHS Grade S 355
Section is satisfactory for axial load, and overall buckling check.

Design axial load	**621 kN**
Buckling resistance	**1333.3 kN**
Factored shear force	**2 kN**
Design shear resistance	**443.74 kN**
Design moment y-y axis	**22.036 kNm**
Buckling resist.moment	**99.755 kNm**
Interaction factors	**0.64026 ≤ 1**
	0.73463 ≤ 1
	0.62709 ≤ 1

Location: Ex2 - Based on 'Design of Curved Steel' Example 1

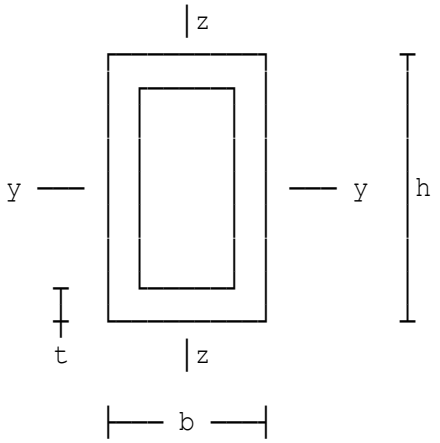

Structural hollow section design

Section is curved in elevation and calculations are in accordance with BS EN 1993-1-1:2005. All loads and moments are factored.

In the calculations the length of member (L) refers to the segment length of beam to be designed.

Design moment about y-y axis	MyEd'=546 kNm
Design SF in z direction	VzEd=155 kN
Design axial load (comp.positive)	NEd=0 kN
Length of member	L=5 m

450 x 250 x 10 RHS - Hot finished.

Properties (cm): A=135 iz=10.5 Wely=1640 Wply=2000 Iy=36900
It=33300 Wt=1990 Welz=1190 Wplz=1330 Iz=14800 iy=16.5

Radius of curvature of beam	R=17.05 m
Effective length for LTB	LT=5 m
Effective length parameter	K=1
Maximum moment on section	M=546 kNm
Far end moment	psiM=546 kNm

HOT FINISHED
RECTANGULAR HOLLOW SECTION
DESIGN SUMMARY

In accordance with EN 10210
450 x 250 x 10 RHS Grade S 355
Section is satisfactory for axial load, and overall buckling check.

Factored shear force	**155 kN**
Design shear resistance	**1778.8 kN**
Design moment y-y axis	**546 kNm**
Buckling resist.moment	**710 kNm**
Interaction factors	**0.90502 ≤ 1**
	0.90502 ≤ 1

Location: Example 3 'Design of Curved Steel'

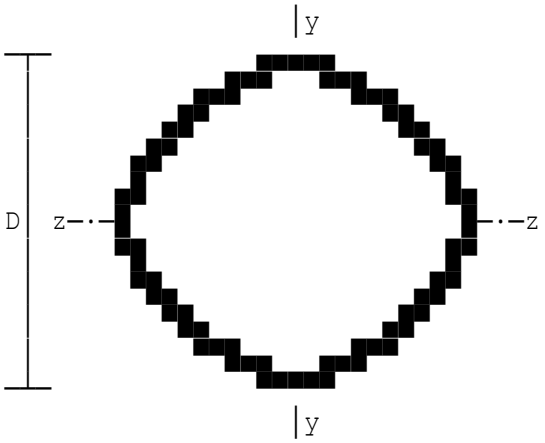

Circular hollow section design

Section curved in elevation & calculations are in accordance with BS5950:Part 1:2000 and SCI publication entitled " Design of Curved Steel". All loads & moments are factored.

Factored moment axis zz	Mz'=7 kNm
Factored SF in y direction	Fv=2 kN
Axial load (comp. is positive)	F=621 kN
Length of member	L=3.264 m
Diameter of section	D=219.1 mm
Thickness	t=6.3 mm
Radius of curvature of beam	Rc=55 m
Young's Modulus	E=205 kN/mm²
Length between restraints z axis	Lz=3264 mm
Length between restraints y axis	Ly=3264 mm

HOT FINISHED
CIRCULAR HOLLOW SECTION
DESIGN SUMMARY

In accordance with EN 10210
219.1 mm O.D. x 6.3 mm CHS Grade S 355
Section is satisfactory for axial load, and overall buckling check.

Axial load	**621 kN**
Compression resistance	**1382.7 kN**
Factored shear force	**2 kN**
Shear capacity	**538.26 kN**
Maximum moment z axis	**22.036 kNm**
Moment capacity	**101.31 kNm**
Local capacity check	**0.63286 ≤ 1**
Overall buckling checks	**0.73411 ≤ 1**
	0.66665 ≤ 1

Location: Based on example 1

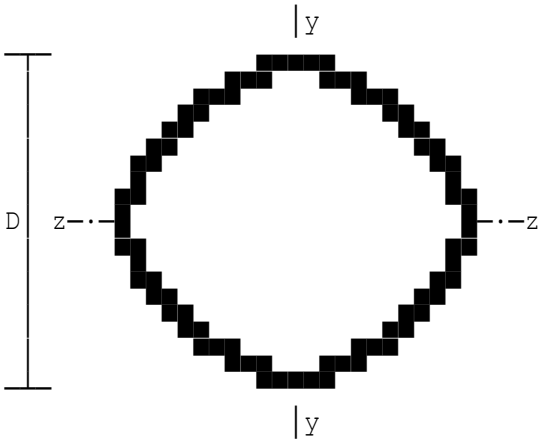

Circular hollow section design

Section curved in elevation & calculations are in accordance with BS5950:Part 1:2000 and SCI publication entitled " Design of Curved Steel". All loads & moments are factored.

Factored moment axis zz	Mz'=546 kNm
Factored SF in y direction	Fv=155 kN
Axial load (comp. is positive)	F=0 kN
Length of member	L=5 m
Diameter of section	D=406.4 mm
Thickness	t=16 mm
Radius of curvature of beam	Rc=17.05 m
Young's Modulus	E=205 kN/mm²

HOT FINISHED
CIRCULAR HOLLOW SECTION
DESIGN SUMMARY

In accordance with EN 10210
406.4 mm O.D. x 16 mm CHS Grade S 355
Section is satisfactory for axial load, and overall buckling check.

Factored shear force	**155 kN**
Shear capacity	**2507.9 kN**
Maximum moment z axis	**546 kNm**
Moment capacity	**866.19 kNm**

Location: Ex1 - SCI publication 'Design of Curved Steel' Example 3

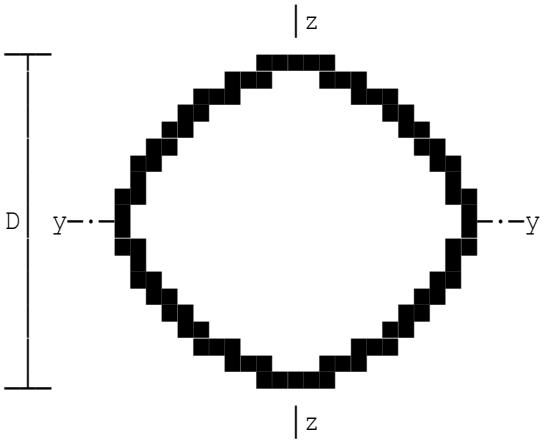

Circular hollow section (CHS)

Section is curved in elevation and design calculations are in accordance with BS EN 1993-1-1 2005. All loads and moments are factored.

In the calculations the length of member (L) refers to the segment length of beam to be designed.

```
Design moment about y-y axis      MyEd'=7 kNm
Design SF in the z direction      VzEd=2 kN
Design axial load (comp.positive) NEd=621 kN
Length of member                  L=3.264 m
219.1 dia x 6.3 thick CHS - Hot finished.
Properties (cm): A=42.117 iy=7.5269 Wely=217.81 Wply=285.37 Iy=2386.1
                 It=4772.3
Radius of curvature of beam       R=55 m
Effective length for LTB          LT=3.264 m
Effective length parameter        K=1
Correction factor                 kc=1

Length between restraints yy axis Ly=3.264 m
Length between restraints zz axis Lz=3.264 m
Maximum end moment                Mh(1)=22 kNm
Maximum span moment               Ms(1)=22 kNm
End moment                        pMh(1)=22 kNm
```

HOT FINISHED
CIRCULAR HOLLOW SECTION
DESIGN SUMMARY

In accordance with EN 10210
219.1 mm O.D. x 6.3 mm CHS Grade S 355
Section is satisfactory for axial load, and overall buckling check.

Design axial load	**621 kN**
Buckling resistance	**1348.5 kN**
Factored shear force	**2 kN**
Design shear resistance	**549.55 kN**
Design moment y-y axis	**22.036 kNm**
Buckling resist.moment	**101.31 kNm**
Interaction factors	**0.63286 ≤ 1**
	0.71485 ≤ 1
	0.61312 ≤ 1

Location: Ex2 - CHS without axial load

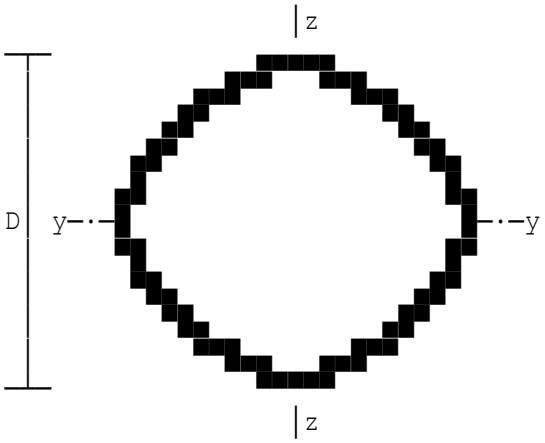

Circular hollow section (CHS)

Section is curved in elevation and design calculations are in accordance with BS EN 1993-1-1 2005. All loads and moments are factored.

In the calculations the length of member (L) refers to the segment length of beam to be designed.

Design moment about y-y axis MyEd'=546 kNm
Design SF in the z direction VzEd=155 kN
Design axial load (comp.positive) NEd=0 kN
Length of member L=5 m
406.4 dia x 16 thick CHS - Hot finished.
Properties (cm): A=196.24 iy=13.814 Wely=1843 Wply=2440 Iy=37449
It=74898
Radius of curvature of beam R=17.05 m
Effective length for LTB LT=5 m
Effective length parameter K=1
Correction factor kc=1

HOT FINISHED
CIRCULAR HOLLOW SECTION
DESIGN SUMMARY

In accordance with EN 10210
406.4 mm O.D. x 16 mm CHS Grade S 355
Section is satisfactory for axial load, and overall buckling check.

Factored shear force	**155 kN**
Design shear resistance	**2560.5 kN**
Design moment y-y axis	**546 kNm**
Buckling resist.moment	**866.19 kNm**
Interaction factors	**0.63035 ≤ 1**
	0.63035 ≤ 1

Location: Design Example 1 Curved Steel publication

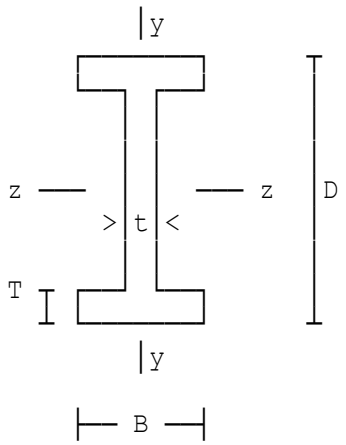

I section beam curved on elevation

Calculations are in accordance with BS5950-1:2000 and SCI publication entitled "Design of Curved Steel".

In the calculations the length of member (L) refers to the segment length of beam to be designed.

All loads and moments are factored.

Design moment about z-z axis	Mz=321 kNm
Design shear force	Fv=155 kN
Design axial load (+ve comp)	F=0 kN
Length of member	L=5 m

533 x 210 x 122 UB.

Radius of curvature of beam	R=17.05 m
Length of segment	Ls=5 m
Young's Modulus	E=205 kN/mm²
Maximum moment	MLT=321 kNm
Quarter point	m2=80 kNm
Mid-span	m3=181 kNm
Three quarter point	m4=261 kNm

UNIVERSAL BEAM DESIGN SUMMARY

533 x 210 x 122 UB Grade S 355
Section is satisfactory for axial, bending, shear, and local capacity, and overall buckling checks.

Factored shear force	**155 kN**
Shear capacity	**1431.4 kN**
Factored moment	**321 kNm**
Moment capacity	**1104 kNm**
LTB resistance	**895.62 kNm**

Location: Design Example 1 - compression convex side

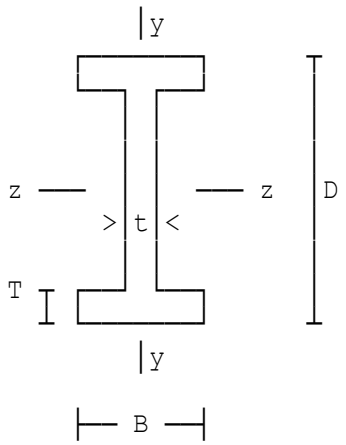

I section beam curved on elevation

Calculations are in accordance with BS5950-1:2000 and SCI publication entitled "Design of Curved Steel".

In the calculations the length of member (L) refers to the segment length of beam to be designed.

All loads and moments are factored.

Design moment about z-z axis	Mz=546 kNm
Design shear force	Fv=155 kN
Design axial load (+ve comp)	F=0 kN
Length of member	L=5 m

533 x 210 x 122 UB.

Radius of curvature of beam	R=17.05 m
Length of segment	Ls=5 m
Young's Modulus	E=205 kN/mm²
Maximum moment	MLT=546 kNm
Quarter point	m2=55 kNm
Mid-span	m3=198 kNm
Three quarter point	m4=362 kNm

UNIVERSAL BEAM DESIGN SUMMARY

533 x 210 x 122 UB Grade S 355
Section is satisfactory for axial, bending, shear, and local capacity, and overall buckling checks.

Factored shear force	**155 kN**
Shear capacity	**1431.4 kN**
Factored moment	**546 kNm**
Moment capacity	**1104 kNm**
LTB resistance	**971.92 kNm**

Location: Based on example 2 load case 1 values

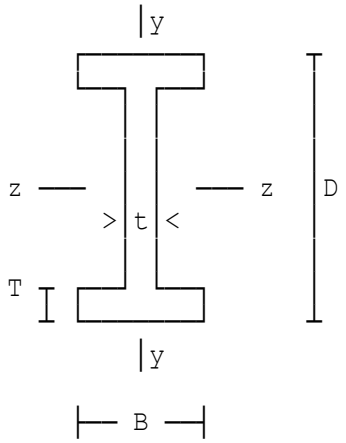

I section beam curved on elevation

Calculations are in accordance with BS5950-1:2000 and SCI publication entitled "Design of Curved Steel".

In the calculations the length of member (L) refers to the segment length of beam to be designed.

All loads and moments are factored.

Design moment about z-z axis	Mz=172 kNm
Design shear force	Fv=56 kN
Design axial load (+ve comp)	F=276 kN
Length of member	L=3.348 m

457 x 191 x 98 UB.

Radius of curvature of beam	R=18.6 m
Length of segment	Ls=3.348 m
Young's Modulus	E=205 kN/mm²
Maximum moment on segment	MLT=172 kNm
Far end BM	betaM=171 kNm
Arch rise	h=11.282 m
Arch span	l=34.2 m
Quarter point	mz2=148 kNm
Mid-span	mz3=134 kNm
Three quarter point	mz4=26.4 kNm
Maximum moment on central half	M24=171 kNm

UNIVERSAL BEAM DESIGN SUMMARY

457 x 191 x 98 UB Grade S 275
Section is satisfactory for axial, bending, shear, and local capacity, and overall buckling checks.

Factored shear force	**56 kN**
Shear capacity	**846.85 kN**
Factored moment	**172 kNm**
Moment capacity	**584.3 kNm**
LTB resistance	**451.35 kNm**
Axial load	**276 kN**
Compressive resistance	**1272.2 kN**
Local capacity check	**0.37864 ≤ 1**
Overall buckling check	**0.45108 ≤ 1**
	0.50209 ≤ 1

Location: Ex1 - SCI publication 'Design of Curved Steel' (example 1)

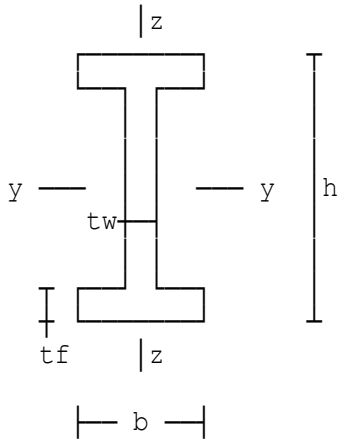

I section beam curved in elevation

Beam is curved in elevation & design calculations are in accordance with BS EN 1993-1-1:2005.

In the calculations the length of member (L) refers to the segment length of beam to be designed.

All loads and moments are factored.

Design moment about major axis	MyEd=321 kNm
Design shear force	VzEd=155 kN
Design axial load (+ve comp)	NEd=0 kN
Length of member	L=5 m

533 x 210 x 122 UKB
Dimensions (mm): h=544.5 b=211.9 tw=12.7 tf=21.3 r=12.7
Properties (cm): Iy=76000 Iz=3390 Wply=3200 Wplz=500 It=178

Radius of curvature of beam	R=17.05 m
Length of segment	Ls=5 m
Effective length for LTB	LT=5 m
Effective length parameter	K=1
Correction factor	kc=1

UNIVERSAL BEAM DESIGN SUMMARY

533 x 210 x 122 UKB Grade S 355
Section is satisfactory for axial, bending, shear, and local capacity, and overall buckling checks.

Design shear force	**155 kN**
Design shear resistance	**1451 kN**
Design moment	**321 kNm**
Moment resistance	**1092.3 kNm**
LTB resistance	**662.41 kNm**
Interaction factors	**0.29386 ≤ 1**
	0.48976 ≤ 1

Location: Ex2 - SCI Example 1 (compression convex side)

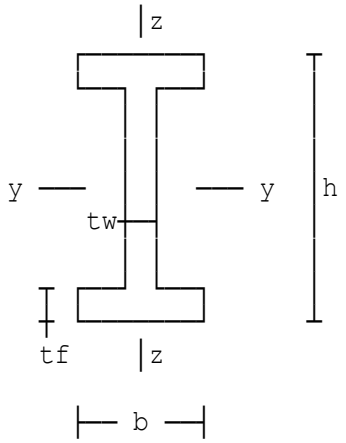

I section beam curved in elevation

Beam is curved in elevation & design calculations are in accordance with BS EN 1993-1-1:2005.

In the calculations the length of member (L) refers to the segment length of beam to be designed.

All loads and moments are factored.

Design moment about major axis	MyEd=546 kNm
Design shear force	VzEd=155 kN
Design axial load (+ve comp)	NEd=0 kN
Length of member	L=5 m

533 x 210 x 122 UKB
Dimensions (mm): h=544.5 b=211.9 tw=12.7 tf=21.3 r=12.7
Properties (cm): Iy=76000 Iz=3390 Wply=3200 Wplz=500 It=178

Radius of curvature of beam	R=17.05 m
Length of segment	Ls=5 m
Correction factor	kc=1

UNIVERSAL BEAM DESIGN SUMMARY

533 x 210 x 122 UKB Grade S 355
Section is satisfactory for axial, bending, shear, and local capacity, and overall buckling checks.

Design shear force	**155 kN**
Design shear resistance	**1451 kN**
Design moment	**546 kNm**
Moment resistance	**1084 kNm**
LTB resistance	**572.91 kNm**
Interaction factors	**0.50371 ≤ 1**
	0.97065 ≤ 1

Location: Ex3 - Based on SCI example 2 load case 1 values

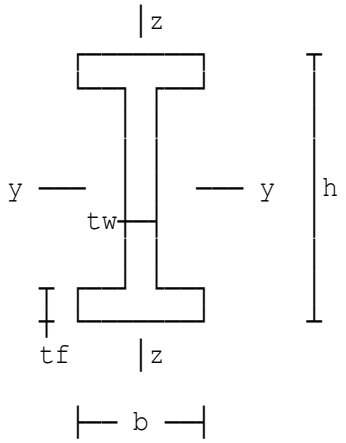

I section beam curved in elevation

Beam is curved in elevation & design calculations are in accordance with BS EN 1993-1-1:2005.

In the calculations the length of member (L) refers to the segment length of beam to be designed.

All loads and moments are factored.

Design moment about major axis	MyEd=172 kNm
Design shear force	VzEd=56 kN
Design axial load (+ve comp)	NEd=276 kN
Length of member	L=3.348 m

457 x 191 x 98 UKB
Dimensions (mm): h=467.2 b=192.8 tw=11.4 tf=19.6 r=10.2
Properties (cm): Iy=45700 Iz=2350 Wply=2230 Wplz=379 It=121

Radius of curvature of beam	R=18.6 m
Length of segment	Ls=3.348 m
Effective length for LTB	LT=3.348 m
Effective length parameter	K=1
Correction factor	kc=1
Arch rise	h'=11.282 m
Arch span	l=34.2 m
Maximum end moment	Mh(1)=172 kNm
Maximum span moment	Ms(1)=172 kNm
End moment	pMh(1)=172 kNm
Maximum end moment	Mh(2)=172 kNm
Maximum span moment	Ms(2)=172 kNm
End moment	pMh(2)=172 kNm

UNIVERSAL BEAM DESIGN SUMMARY

457 x 191 x 98 UKB Grade S 275
Section is satisfactory for axial, bending, shear, and local capacity, and overall buckling checks.

Design shear force	**56 kN**
Design shear resistance	**851.51 kN**
Design moment	**172 kNm**
Moment resistance	**584.3 kNm**
LTB resistance	**590.95 kNm**
Design axial load	**276 kN**
Buckling resistance	**1254.4 kN**
Interaction factors	**0.37864 ≤ 1**
	0.56622 ≤ 1
	0.41432 ≤ 1

Location: Ex1 - Sway check compliant

Portal frame (plastic design)

Procedure to determine the initial section sizes of pitched roof, haunched steel portal frames with partial base restraint.

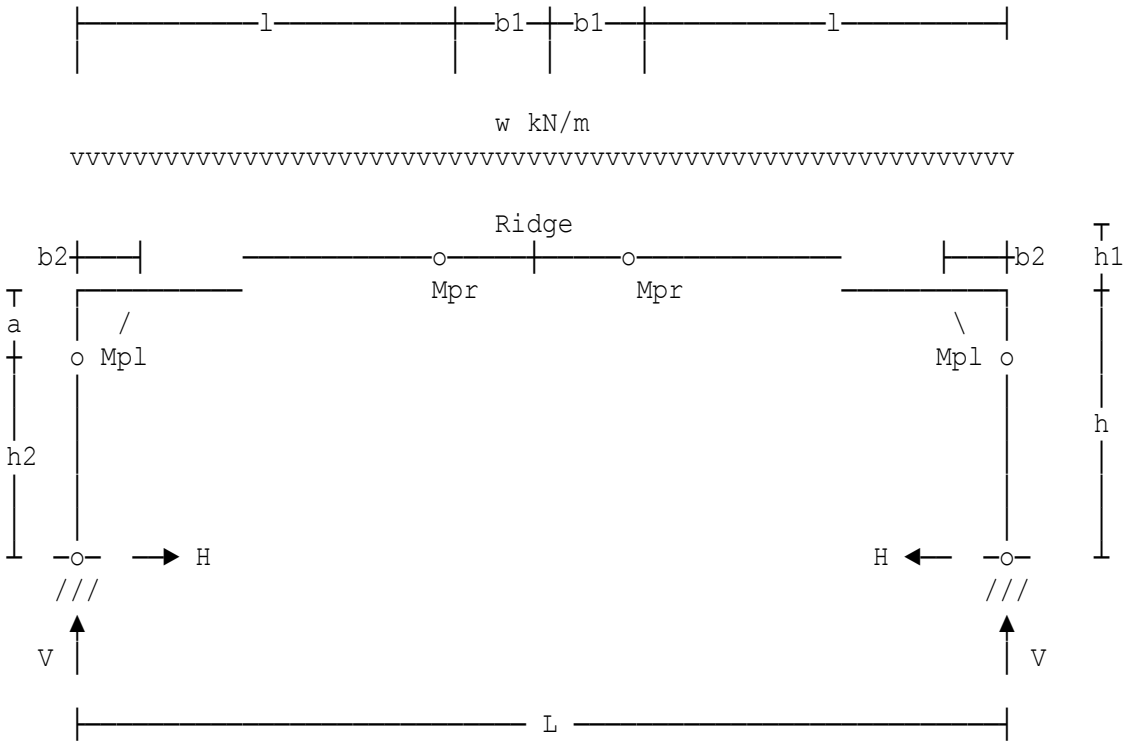

Span of frame	L=30 m
Frame centres	L2=6 m
Height to eaves	h=7 m
Height, eaves to ridge	h1=4 m
Sheeting and insulation	wsi=0.2 kN/m²
Purlins	wp=0.07 kN/m²
Frame	wf=0.16 kN/m²
Imposed load	wi'=0.75 kN/m²

Rafter to column moment ratio	beta=0.95
the bottom of the haunch	a=0.75 m
533 x 210 x 82 UB.	
457 x 191 x 82 UB.	
Actual length considered	Lh=1.3 m

Column Details

Vertical reaction	V=162.18 kN
Horizontal reaction	Hr=81.217 kN
Moment at base	Mr=56.4 kNm

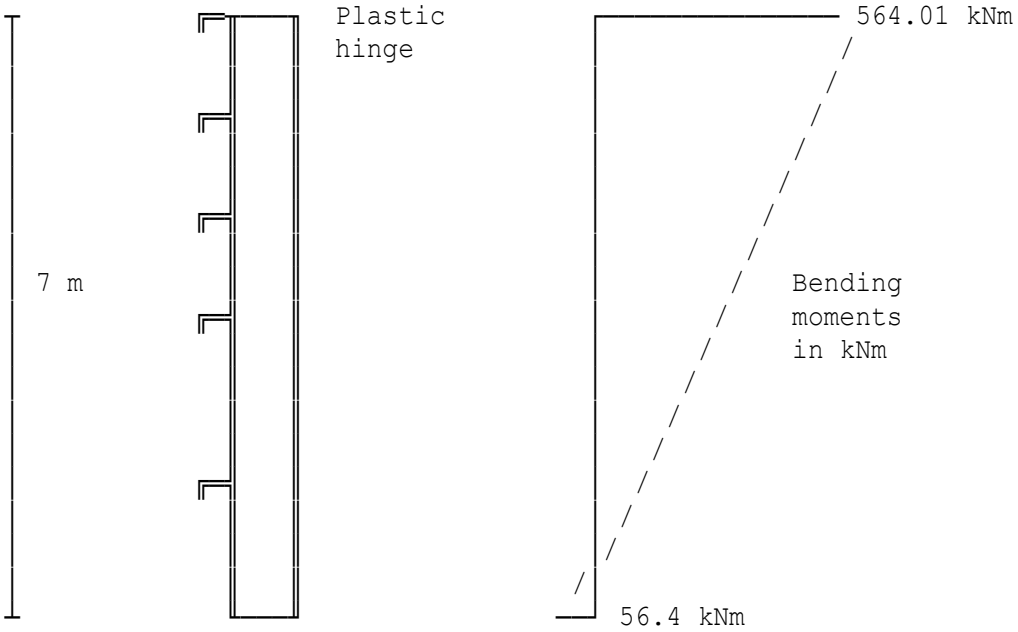

Rafter details - increments of a 20th the length of the rafter

Position	Distance on rafter	Distance on plan	Bending moment
0	Column C.L		---------
Face of column			588.18 kNm
1	0.77621 m	0.75 m	522.57 kNm
2	1.5524 m	1.5 m	426.3 kNm
3	2.3286 m	2.25 m	336.11 kNm
4	3.1048 m	3 m	252.01 kNm
5	3.881 m	3.75 m	173.99 kNm
6	4.6573 m	4.5 m	102.04 kNm
Point of contraflexure		5.01 m	0
7	5.4335 m	5.25 m	36.183 kNm
8	6.2097 m	6 m	-23.595 kNm
9	6.9859 m	6.75 m	-77.292 kNm
10	7.7621 m	7.5 m	-124.91 kNm
11	8.5383 m	8.25 m	-166.44 kNm
12	9.3145 m	9 m	-201.89 kNm
13	10.091 m	9.75 m	-231.26 kNm
14	10.867 m	10.5 m	-254.55 kNm
15	11.643 m	11.25 m	-271.75 kNm
16	12.419 m	12 m	-282.88 kNm
17	13.196 m	12.75 m	-287.92 kNm
Plastic hinge	13.484 m	13.029 m	-288.25 kNm
18	13.972 m	13.5 m	-286.88 kNm
19	14.748 m	14.25 m	-279.76 kNm
20	15.524 m	15 m	-266.56 kNm

Note: Negative sign indicates tension on bottom surface

Location: Ex2 - Nominal pin (alpha = 0.1)

Portal frame (plastic design)

Procedure to determine the initial section sizes of pitched roof, haunched steel portal frames with partial base restraint.

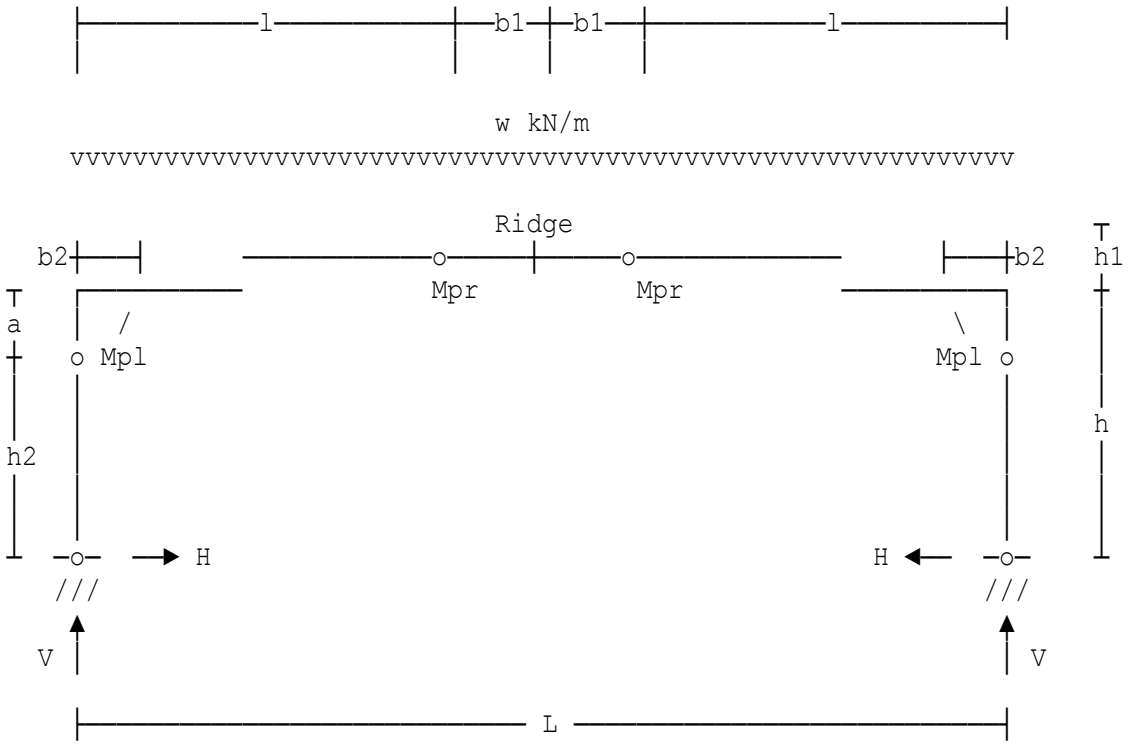

Span of frame	L=30 m
Frame centres	L2=6 m
Height to eaves	h=7 m
Height, eaves to ridge	h1=4 m
Sheeting and insulation	wsi=0.2 kN/m²
Purlins	wp=0.07 kN/m²
Frame	wf=0.16 kN/m²
Imposed load	wi'=0.75 kN/m²

Rafter to column moment ratio	beta=0.55
the bottom of the haunch	a=0.75 m
533 x 210 x 82 UB.	
406 x 178 x 60 UB.	
Actual length considered	Lh=2.8 m

Column Details

Vertical reaction	V=162.18 kN
Horizontal reaction	Hr=81.217 kN
Moment at base	Mr=56.4 kNm

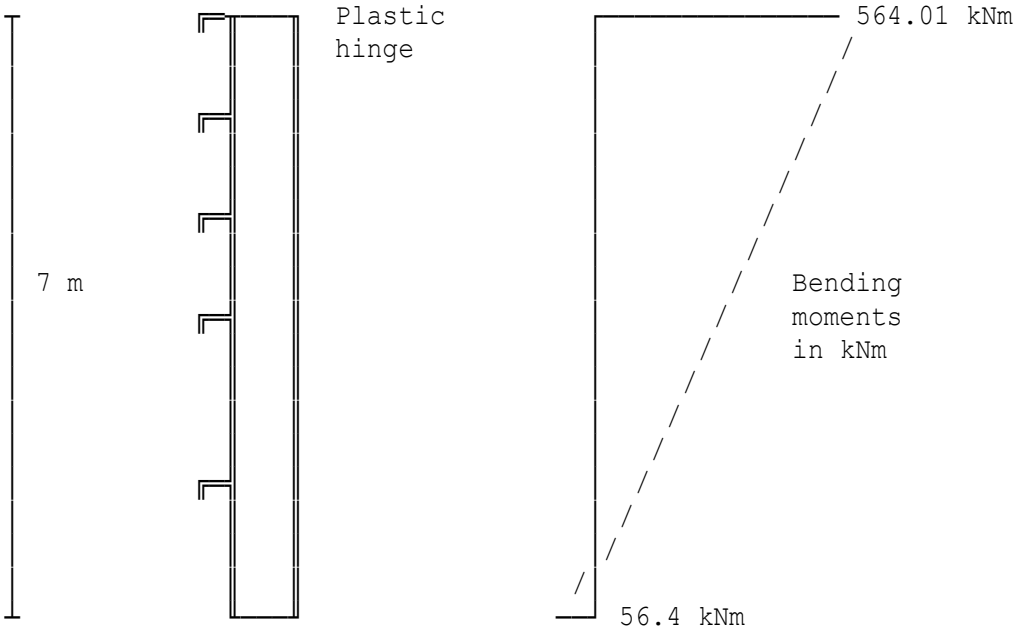

Rafter details - increments of a 20th the length of the rafter

Position	Distance on rafter	Distance on plan	Bending moment
0	Column C.L		---------
Face of column			588.18 kNm
1	0.77621 m	0.75 m	522.57 kNm
2	1.5524 m	1.5 m	426.3 kNm
3	2.3286 m	2.25 m	336.11 kNm
4	3.1048 m	3 m	252.01 kNm
5	3.881 m	3.75 m	173.99 kNm
6	4.6573 m	4.5 m	102.04 kNm
Point of contraflexure		5.01 m	0
7	5.4335 m	5.25 m	36.183 kNm
8	6.2097 m	6 m	-23.595 kNm
9	6.9859 m	6.75 m	-77.292 kNm
10	7.7621 m	7.5 m	-124.91 kNm
11	8.5383 m	8.25 m	-166.44 kNm
12	9.3145 m	9 m	-201.89 kNm
13	10.091 m	9.75 m	-231.26 kNm
14	10.867 m	10.5 m	-254.55 kNm
15	11.643 m	11.25 m	-271.75 kNm
16	12.419 m	12 m	-282.88 kNm
17	13.196 m	12.75 m	-287.92 kNm
Plastic hinge	13.213 m	12.767 m	-287.97 kNm
18	13.972 m	13.5 m	-286.88 kNm
19	14.748 m	14.25 m	-279.76 kNm
20	15.524 m	15 m	-266.56 kNm

Note: Negative sign indicates tension on bottom surface

Location: Ex3 - This is example 1 from Steelwork Design Guide

Portal frame (plastic design)

Procedure to determine the initial section sizes of pitched roof, haunched steel portal frames with partial base restraint.

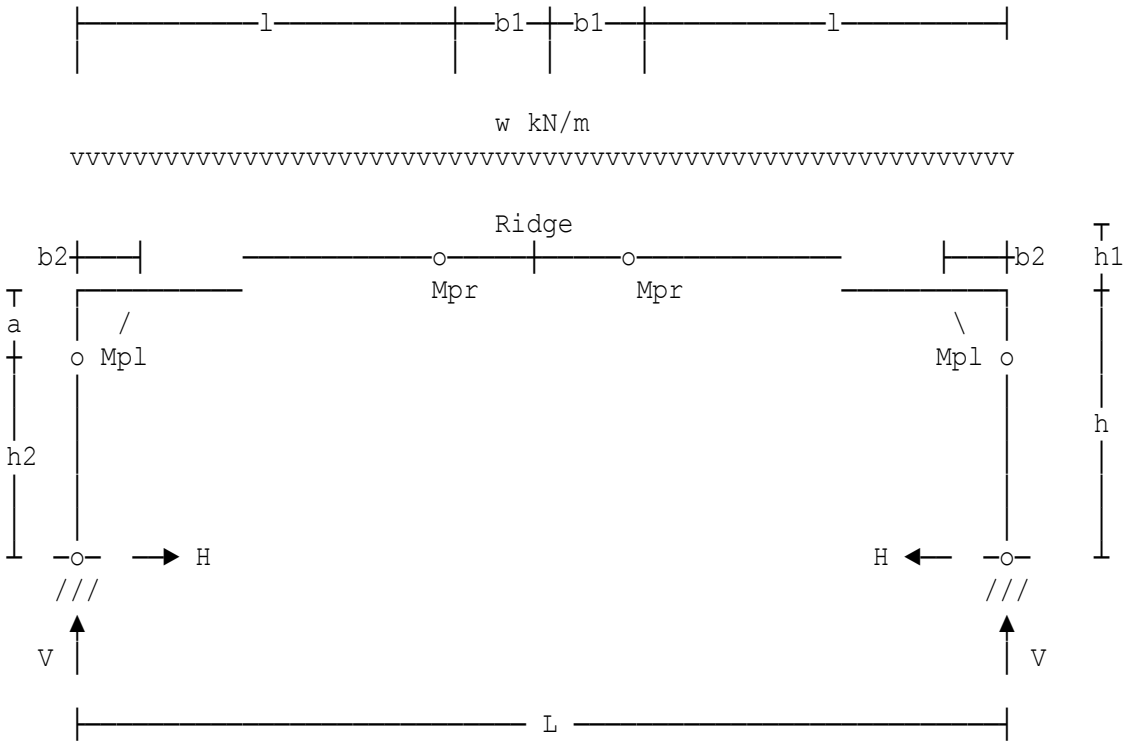

Span of frame	L=30 m
Frame centres	L2=6 m
Height to eaves	h=7 m
Height, eaves to ridge	h1=4 m
Sheeting and insulation	wsi=0.2 kN/m²
Purlins	wp=0.07 kN/m²
Frame	wf=0.16 kN/m²
Imposed load	wi'=0.75 kN/m²

Rafter to column moment ratio beta=0.5
the bottom of the haunch a=0.535 m
533 x 210 x 82 UB.
406 x 178 x 54 UB.

Column Details

Vertical reaction V=162.18 kN
Horizontal reaction Hr=87.24 kN

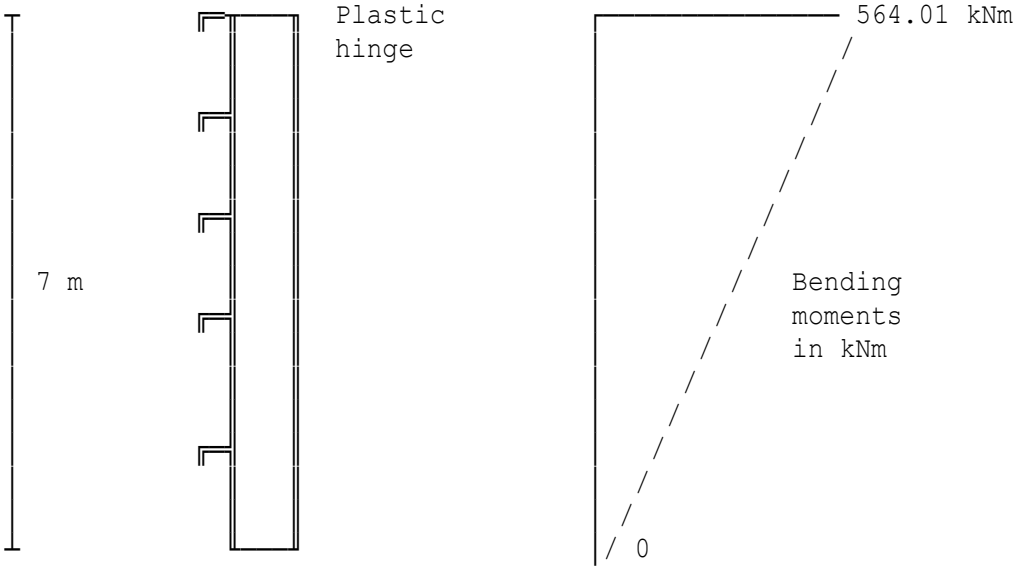

Rafter details - increments of a 20th the length of the rafter

Position	Distance on rafter	Distance on plan	Bending moment
0	Column C.L		---------
Face of column			574.37 kNm
1	0.77621 m	0.75 m	509.54 kNm
2	1.5524 m	1.5 m	414.47 kNm
3	2.3286 m	2.25 m	325.49 kNm
4	3.1048 m	3 m	242.59 kNm
5	3.881 m	3.75 m	165.77 kNm
6	4.6573 m	4.5 m	95.033 kNm
7	5.4335 m	5.25 m	30.377 kNm
Point of contraflexure		5.63 m	0
8	6.2097 m	6 m	-28.196 kNm
9	6.9859 m	6.75 m	-80.689 kNm
10	7.7621 m	7.5 m	-127.1 kNm
11	8.5383 m	8.25 m	-167.43 kNm
12	9.3145 m	9 m	-201.67 kNm
13	10.091 m	9.75 m	-229.84 kNm
14	10.867 m	10.5 m	-251.92 kNm
15	11.643 m	11.25 m	-267.92 kNm
16	12.419 m	12 m	-277.84 kNm
17	13.196 m	12.75 m	-281.68 kNm
Plastic hinge	13.312 m	12.862 m	-281.73 kNm
18	13.972 m	13.5 m	-279.44 kNm
19	14.748 m	14.25 m	-271.11 kNm
20	15.524 m	15 m	-256.71 kNm

Note: Negative sign indicates tension on bottom surface

Location: Ex4 - Ex1 from paper presented to The Structural Engineer

Portal frame (plastic design)

Procedure to determine the initial section sizes of pitched roof, haunched steel portal frames with partial base restraint.

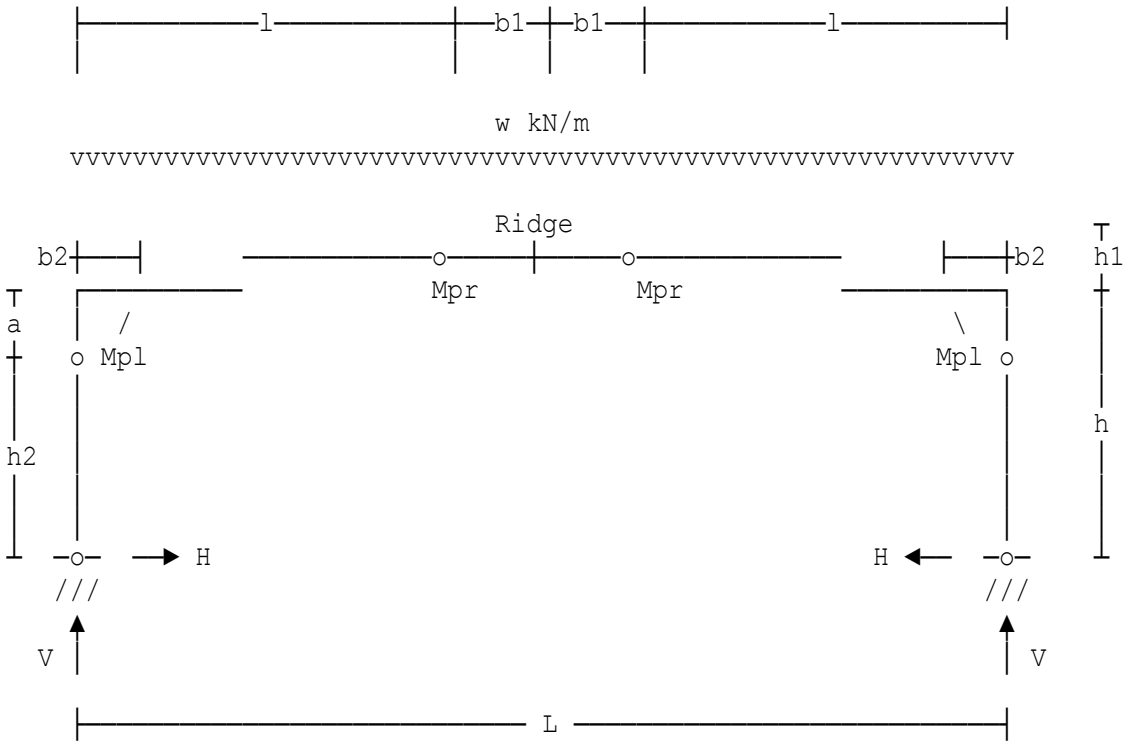

Span of frame	L=25 m
Frame centres	L2=6 m
Height to eaves	h=7.6 m
Height, eaves to ridge	h1=3.75 m
Sheeting and insulation	wsi=0.19 kN/m²
Purlins	wp=0.07 kN/m²
Frame	wf=0.12 kN/m²
Imposed load	wi'=0.65 kN/m²

Rafter to column moment ratio beta=0.3
the bottom of the haunch a=0.625 m
457 x 191 x 67 UB.
356 x 127 x 33 UB.

WARNING:
Frame is outside the limit for the sway-check method.

```
* Tolerance (in range 0.1 to 1.0) tolst=0.1 %
Column self weight in kg/m        wtc=82 kg/m
Permanent loading (-ve is down)   Gk=-6.15 kN/m
Imposed loading (-ve is down)     Qki=-5 kN/m
Snow loading (-ve is down)        Qks=-3.5 kN/m
Wind on left column   (Cpi=-0.3)  Wk1'=2.55 kN/m
Wind on left rafter   (Cpi=-0.3)  Wk2'=1.07 kN/m
Wind on right rafter  (Cpi=-0.3)  Wk3'=3.06 kN/m
Wind on right column  (Cpi=-0.3)  Wk4'=2.29 kN/m
Wind on left column   (Cpi=-0.3)  Wk5'=-2.33 kN/m
Wind on left rafter   (Cpi=-0.3)  Wk6'=-1.5 kN/m
Wind on right rafter  (Cpi=-0.3)  Wk7'=-1.5 kN/m
Wind on right column  (Cpi=-0.3)  Wk8'=2.33 kN/m
```

```
* Tolerance (in range 0.1 to 1.0) tolst=0.1 %
Column self weight in kg/m        wtc=125 kg/m
Permanent loading (-ve is down)   Gk=-5.41 kN/m
Imposed loading (-ve is down)     Qki=-4.8 kN/m
Snow loading (-ve is down)        Qks=-3.2 kN/m
Wind on left column   (Cpi=-0.3)  Wk1'=6.87 kN/m
Wind on left rafter   (Cpi=-0.3)  Wk2'=3.2 kN/m
Wind on right rafter  (Cpi=-0.3)  Wk3'=1.716 kN/m
Wind on right column  (Cpi=-0.3)  Wk4'=0.67 kN/m
Wind on left column   (Cpi=-0.3)  Wk5'=-4.33 kN/m
Wind on left rafter   (Cpi=-0.3)  Wk6'=-1.92 kN/m
Wind on right rafter  (Cpi=-0.3)  Wk7'=-1.92 kN/m
Wind on right column  (Cpi=-0.3)  Wk8'=4.33 kN/m
```

```
* Tolerance (in range 0.1 to 1.0) tolst=0.1 %
Column self weight in kg/m        wtc=113 kg/m
Permanent loading (-ve is down)   Gk=-5.41 kN/m
Imposed loading (-ve is down)     Qki=-4.8 kN/m
Snow loading (-ve is down)        Qks=-3.2 kN/m
Wind on left column   (Cpi=-0.3)  Wk1'=6.87 kN/m
Wind on left rafter   (Cpi=-0.3)  Wk2'=3.2 kN/m
Wind on right rafter  (Cpi=-0.3)  Wk3'=1.716 kN/m
Wind on right column  (Cpi=-0.3)  Wk4'=0.67 kN/m
Wind on left column   (Cpi=-0.3)  Wk5'=-4.33 kN/m
Wind on left rafter   (Cpi=-0.3)  Wk6'=-1.92 kN/m
Wind on right rafter  (Cpi=-0.3)  Wk7'=-1.92 kN/m
Wind on right column  (Cpi=-0.3)  Wk8'=4.33 kN/m
```

```
* Tolerance (in range 0.1 to 1.0) tolst=0.1 %
Column self weight in kg/m        wtc=113 kg/m
Permanent loading (-ve is down)   Gk=-5.41 kN/m
Imposed loading (-ve is down)     Qki=-4.8 kN/m
Snow loading (-ve is down)        Qks=-3.2 kN/m
Wind on left column   (Cpi=-0.3)  Wk1'=6.87 kN/m
Wind on left rafter   (Cpi=-0.3)  Wk2'=3.2 kN/m
Wind on right rafter  (Cpi=-0.3)  Wk3'=1.716 kN/m
Wind on right column  (Cpi=-0.3)  Wk4'=0.67 kN/m
Wind on left column   (Cpi=-0.3)  Wk5'=-4.33 kN/m
Wind on left rafter   (Cpi=-0.3)  Wk6'=-1.92 kN/m
Wind on right rafter  (Cpi=-0.3)  Wk7'=-1.92 kN/m
Wind on right column  (Cpi=-0.3)  Wk8'=4.33 kN/m
```

```
* Tolerance (in range 0.1 to 1.0) tolst=0.1 %
Column self weight in kg/m        wtc=113 kg/m
Permanent loading (-ve is down)   Gk=-5.41 kN/m
Imposed loading (-ve is down)     Qki=-4.8 kN/m
Snow loading (-ve is down)        Qks=-3.2 kN/m
Wind on left column   (Cpi=-0.3)  Wk1'=6.87 kN/m
Wind on left rafter   (Cpi=-0.3)  Wk2'=3.2 kN/m
Wind on right rafter  (Cpi=-0.3)  Wk3'=1.716 kN/m
Wind on right column  (Cpi=-0.3)  Wk4'=0.67 kN/m
Wind on left column   (Cpi=-0.3)  Wk5'=-4.33 kN/m
Wind on left rafter   (Cpi=-0.3)  Wk6'=-1.92 kN/m
Wind on right rafter  (Cpi=-0.3)  Wk7'=-1.92 kN/m
Wind on right column  (Cpi=-0.3)  Wk8'=4.33 kN/m
```

Location: Example 1 from SCI P313

Span of portal frame	L=22 m
Eaves height	Ec=5.7 m
Frame centres	S=5 m
Rafter pitch	theta=6°
Length of haunch	H=1 m
457 x 152 x 52 UB.	
457 x 152 x 52 UB.	
cladding	dc=0.08 kN/m²
purlins	dp=0.03 kN/m²
rafter	dr=0.1 kN/m²
Reduced cladding load	rdc=0.07 kN/m²
Dead weight of wall panel	wp=7 kN

SUMMARY	**Overturning moment**	**53.847 kNm**
	Horizontal reaction	**5.2109 kN**
	Vertical reaction	**18 kN**

Length of baseplate	hp=650 mm
Breadth of baseplate	bp=400 mm
Concrete strength	fcu=25 N/mm²
Number of bolts	Nb=4
Assumed diameter of bolt	bd=20 mm
Spacing in line with frame axis	spac=550 mm
Edge distance to tension bolts	k=50 mm
Spacing in longitudinal direct.	sb=300 mm
Assumed weld size	sw=8 mm
Selected base plate thickness	tp=25 mm
Selected fillet weld size	sw=8 mm
Selected fillet weld size	sfw=8 mm

SUMMARY OF	**Size 650 mm x 400 mm x 25 mm**	
BASEPLATE	**Grade S 275 steel**	
REQUIREMENTS	**Number of H.D. bolts**	**4**
	Diameter of bolts	**M 20**
	Grade 8.8	
WELDS		
TENSION	**Fillet weld**	**8 mm**
	Contact areas on the baseplate and column are machined to give a tight bearing contact	
	The specified tension weld will be used for both flanges	
WEB	**Fillet weld**	**8 mm**

Longitudinal stability

Height of masonry wall Hw=1 m
Number of frames nf=10
Load in fire on horizontal member HR=0.025*nf*Vr*(Ec-Hw)/Ec=3.7105 kN

For a tensile stress of 0.065 times the design strength pys=275 N/mm²
Cross-sectional area required Acl=HR*10^3/(pys*0.065)=207.58 mm²

The horizontal steel members providing longitudinal stability do not require fire protection.

Location: Ex2 - Single span steel frame with lattice rafter

Span of lattice frame	L=30 m
Eaves height	Ec=6.7 m
Frame centres	S=6 m
Rafter pitch	theta=5°
457 x 191 x 89 UB.	
cladding	dc=0.13 kN/m²
purlins	dp=0.03 kN/m²
Lattice rafter	dr=0.1 kN/m²
Reduced cladding load	rdc=0.1 kN/m²
Dead weight of wall panel	wp=0 kN

SUMMARY **Overturning moment 263.51 kNm**
Horizontal reaction 39.33 kN
Vertical reaction 20.7 kN

Length of baseplate	hp=650 mm
Breadth of baseplate	bp=400 mm
Concrete strength	fcu=30 N/mm²
Number of bolts	Nb=6
Assumed diameter of bolt	bd=30 mm
Spacing in line with frame axis	spac=550 mm
Edge distance to tension bolts	k=50 mm
Spacing in longitudinal direct.	sb=300 mm
Assumed weld size	sw=13 mm
Selected base plate thickness	tp=45 mm
Selected fillet weld size	sw=13 mm
Selected fillet weld size	sfw=8 mm

SUMMARY OF BASEPLATE REQUIREMENTS
Size 650 mm x 400 mm x 45 mm
Grade S 275 steel
Number of H.D. bolts 6
Diameter of bolts M 30
Grade 8.8

WELDS
TENSION **Fillet weld 13 mm**
Contact areas on the baseplate and column are machined to give a tight bearing contact
The specified tension weld will be used for both flanges
WEB **Fillet weld 8 mm**

Longitudinal stability

Height of masonry wall	Hw=0 m
Number of frames	nf=10
Load in fire on horizontal member	HR=0.025*nf*Vr*(Ec-Hw)/Ec=5.175 kN

For a tensile stress of 0.065 times the design strength pys=265 N/mm²
Cross-sectional area required Acl=HR*10^3/(pys*0.065)=300.44 mm²

The horizontal steel members providing longitudinal stability do not

require fire protection.

Location: Ex3 - SCI Example 2 old publication

Span of portal frame	L=30 m
Eaves height	Ec=9 m
Frame centres	S=6 m
Rafter pitch	theta=7.5°
Length of haunch	H=3 m
533 x 210 x 101 UB.	
457 x 191 x 67 UB.	
cladding	dc=0.17 kN/m²
purlins	dp=0.03 kN/m²
rafter	dr=0.11 kN/m²
Reduced cladding load	rdc=0.06 kN/m²
Dead weight of wall panel	wp=14 kN

SUMMARY	**Overturning moment**	**170.1 kNm**
	Horizontal reaction	**10.136 kN**
	Vertical reaction	**32 kN**

Length of baseplate	hp=700 mm
Breadth of baseplate	bp=400 mm
Concrete strength	fcu=25 N/mm²
Number of bolts	Nb=6
Assumed diameter of bolt	bd=24 mm
Spacing in line with frame axis	spac=600 mm
Edge distance to tension bolts	k=50 mm
Spacing in longitudinal direct.	sb=300 mm
Assumed weld size	sw=8 mm
Selected base plate thickness	tp=35 mm
Selected fillet weld size	sw=8 mm
Selected fillet weld size	sfw=8 mm

SUMMARY OF	**Size 700 mm x 400 mm x 35 mm**	
BASEPLATE	**Grade S 275 steel**	
REQUIREMENTS	**Number of H.D. bolts**	**6**
	Diameter of bolts	**M 24**
	Grade 8.8	
WELDS		
TENSION	**Fillet weld**	**8 mm**
	Contact areas on the baseplate and column are machined to give a tight bearing contact	
	The specified tension weld will be used for both flanges	
WEB	**Fillet weld**	**8 mm**

Longitudinal stability

Height of masonry wall Hw=7 m
As the masonry wall is at least 75% of the height to the eaves provided it is connected to the column the requirements for longitudinal stability (6.2.3) will be satisfied.

Location: Ex4 - Long span example

Span of portal frame	L=38 m
Eaves height	Ec=8.25 m
Frame centres	S=6 m
Rafter pitch	theta=6°
Length of haunch	H=3.8 m
686 x 254 x 140 UB.	
533 x 210 x 101 UB.	
cladding	dc=0.2 kN/m²
purlins	dp=0.08 kN/m²
rafter	dr=0.166 kN/m²
Reduced cladding load	rdc=0.02 kN/m²
Dead weight of wall panel	wp=10 kN

SUMMARY	**Overturning moment**	**350.03 kNm**
	Horizontal reaction	**23.281 kN**
	Vertical reaction	**40.324 kN**

Length of baseplate	hp=875 mm
Breadth of baseplate	bp=450 mm
Concrete strength	fcu=20 N/mm²
Offset distance	od=75 mm
Number of bolts	Nb=6
Assumed diameter of bolt	bd=30 mm
Spacing in line with frame axis	spac=650 mm
Edge distance to tension bolts	k=50 mm
Dimension between tension bolts	a1=120 mm
Spacing in longitudinal direct.	sb=350 mm
Assumed weld size	sw=12 mm
Selected base plate thickness	tp=40 mm
Selected fillet weld size	sw=12 mm
Selected fillet weld size	swc=12 mm
Selected fillet weld size	sfw=8 mm

SUMMARY OF	**Size 875 mm x 450 mm x 40 mm**	
BASEPLATE	**Grade S 275 steel**	
REQUIREMENTS	**Number of H.D. bolts**	**6**
	Diameter of bolts	**M 30**
	Grade 8.8	
WELDS		
TENSION	**Fillet weld**	**12 mm**
COMPRESSION	**Fillet weld**	**12 mm**
WEB	**Fillet weld**	**8 mm**

Longitudinal stability

Height of masonry wall Hw=6.2 m
As the masonry wall is at least 75% of the height to the eaves provided it is connected to the column the requirements for longitudinal stability (6.2.3) will be satisfied.

Location: Ex5 - Short span

Span of portal frame	L=10 m
Eaves height	Ec=4.5 m
Frame centres	S=5 m
Rafter pitch	theta=10°
Length of haunch	H=1 m
178 x 102 x 19 UB.	
178 x 102 x 19 UB.	
cladding	dc=0.12 kN/m²
purlins	dp=0.07 kN/m²
rafter	dr=0.038 kN/m²
Reduced cladding load	rdc=0.012 kN/m²
Dead weight of wall panel	wp=8 kN

SUMMARY	**Overturning moment 4.7025 kNm**
	Horizontal reaction 1.0056 kN
	Vertical reaction 11 kN

Length of baseplate	hp=340 mm
Breadth of baseplate	bp=240 mm
Concrete strength	fcu=20 N/mm²
Offset distance	od=50 mm
Number of bolts	Nb=4
Assumed diameter of bolt	bd=20 mm
Spacing in line with frame axis	spac=200 mm
Edge distance to tension bolts	k=50 mm
Spacing in longitudinal direct.	sb=120 mm
Assumed weld size	sw=8 mm
Selected base plate thickness	tp=15 mm
Selected fillet weld size	sw=8 mm
Selected fillet weld size	sfw=8 mm

SUMMARY OF	**Size 340 mm x 240 mm x 15 mm**
BASEPLATE	**Grade S 275 steel**
REQUIREMENTS	**Number of H.D. bolts 4**
	Diameter of bolts M 20
	Grade 4.6
WELDS	
TENSION	**Fillet weld 8 mm**
	Contact areas on the baseplate and column are machined to give a tight bearing contact
	The specified tension weld will be used for both flanges
WEB	**Fillet weld 8 mm**

Longitudinal stability

Height of masonry wall Hw=4.5 m
As the masonry wall is at least 75% of the height to the eaves provided it is connected to the column the requirements for longitudinal stability (6.2.3) will be satisfied.

Location: Example 1 from SCI P313

Design of column bases subject to boundary conditions using the recommended procedures set out in The Steel Construction Institute publication "Single Storey Steel Framed Buildings in Fire Boundary Conditions". Calculations are in accordance with EC3 Part 1-1.

Span of portal frame	L=22 m
Eaves height	He=5.7 m
Frame centres	c2=5 m
Rafter pitch	theta=6°
Length of haunch	Lh=1 m

Column section properties

457 x 152 x 52 UKB
Dimensions (mm): hc=449.8 bc=152.4 twc=7.6 tfc=10.9 rc=10.2
Properties (cm): Iyc=21400 Izc=645 Wplyc=1100 Wplzc=133
Itc=21.4 Ac=66.6 iyc=17.925 izc=3.112

Rafter section properties

457 x 152 x 52 UKB
Dimensions (mm): hr=449.8 br=152.4 twr=7.6 tfr=10.9 rr=10.2
Properties (cm): Iyr=21400 Izr=645 Wplyr=1100 Wplzr=133
Itr=21.4 Ar=66.6 iyr=17.925 izr=3.112

Cladding loading	dc=0.08 kN/m²
Purlin loading	dp=0.03 kN/m²
Rafter loading	dr=0.1 kN/m²
Reduced cladding load	rdc=0.07 kN/m²
Wall panel weight	wp=7 kN

SUMMARY

Overturning moment	**53.847 kNm**
Horizontal reaction	**5.2109 kN**
Vertical reaction	**18 kN**

Number of bolts	Nb=4
Assumed diameter of bolt	bd=20 mm
Spacing in line with frame axis	spac=550 mm
Edge distance to tension bolts	k=50 mm
Spacing in longitudinal direct.	sb=300 mm

Selected baseplate thickness tp=25 mm
Tensile resistance per anchor FtRd=0.9*fub*As/(gamM2*10^3)=141.12 kN

Selected fillet weld size sw=8 mm
Selected fillet weld size sfw=8 mm

SUMMARY OF BASEPLATE REQUIREMENTS	**Size 650 mm x 400 mm x 25 mm**	
	Grade S 275 steel	
	Number of H.D. bolts	**4**
	Diameter of bolts	**M 20**
	Grade 8.8	
WELD SUMMARY		
TENSION	**Fillet weld**	**8 mm**
	Contact areas on the baseplate and column are machined to give a tight bearing contact.	
	The specified tension weld will be used for both flanges.	
WEB	**Fillet weld**	**8 mm**

Longitudinal stability to SCI P313 Section 2.8

Height of masonry wall Hwall=1 m
Number of frames nf=10
Vertical reaction Vr=18 kN
Height of masonry wall Hwall=1 m
Height of unprotected area Hua=He-Hwall=4.7 m
Load in fire on horizontal member HR=0.025*nf*Vr*Hua/He=3.7105 kN
For an unprotected member the tensile stress may be taken to be 0.065 of the design strength for normal temperature design.
Cross-sectional area required Acl=HR*10^3/(fyc*0.065)=207.58 mm²

The horizontal steel members providing longitudinal stability do not require fire protection.

Location: Ex2 - Single span steel frame with lattice rafter

Design of column bases subject to boundary conditions using the recommended procedures set out in The Steel Construction Institute publication "Single Storey Steel Framed Buildings in Fire Boundary Conditions". Calculations are in accordance with EC3 Part 1-1.

Span of lattice frame	L=30 m
Eaves height	He=6.7 m
Frame centres	c2=6 m
Rafter pitch	theta=5°

Column section properties

457 x 191 x 89 UKB
Dimensions (mm): hc=463.4 bc=191.9 twc=10.5 tfc=17.7 rc=10.2
Properties (cm): Iyc=41000 Izc=2090 Wplyc=2010 Wplzc=338
Itc=90.7 Ac=114 iyc=18.964 izc=4.2817

Cladding loading	dc=0.13 kN/m²
Purlin loading	dp=0.03 kN/m²
Lattice rafter loading	dr=0.1 kN/m²
Reduced cladding load	rdc=0.1 kN/m²
Wall panel weight	wp=0 kN

SUMMARY **Overturning moment 263.51 kNm**
Horizontal reaction 39.33 kN
Vertical reaction 20.7 kN

Number of bolts	Nb=6
Assumed diameter of bolt	bd=30 mm
Spacing in line with frame axis	spac=550 mm
Edge distance to tension bolts	k=50 mm
Spacing in longitudinal direct.	sb=300 mm
Selected baseplate thickness	tp=45 mm
Tensile resistance per anchor	FtRd=0.9*fub*As/(gamM2*10^3)=323.14 kN
Selected fillet weld size	sw=13 mm
Selected fillet weld size	sfw=8 mm

SUMMARY OF BASEPLATE REQUIREMENTS
Size 650 mm x 400 mm x 45 mm
Grade S 275 steel
Number of H.D. bolts 6
Diameter of bolts M 30
Grade 8.8

WELD SUMMARY
TENSION **Fillet weld 13 mm**
Contact areas on the baseplate and column are machined to give a tight bearing contact.
The specified tension weld will be used for both flanges.
WEB **Fillet weld 8 mm**

Longitudinal stability to SCI P313 Section 2.8

Height of masonry wall Hwall=0 m
Number of frames nf=10
Vertical reaction Vr=20.7 kN
Height of masonry wall Hwall=0 m
Height of unprotected area Hua=He-Hwall=6.7 m
Load in fire on horizontal member HR=0.025*nf*Vr*Hua/He=5.175 kN
For an unprotected member the tensile stress may be taken to be 0.065 of the design strength for normal temperature design.
Cross-sectional area required Acl=HR*10^3/(fyc*0.065)=300.44 mm²

The horizontal steel members providing longitudinal stability do not require fire protection.

Location: Ex3 - SCI Example 2 old publication

Design of column bases subject to boundary conditions using the recommended procedures set out in The Steel Construction Institute publication "Single Storey Steel Framed Buildings in Fire Boundary Conditions". Calculations are in accordance with EC3 Part 1-1.

Span of portal frame	L=30 m
Eaves height	He=9 m
Frame centres	c2=6 m
Rafter pitch	theta=7.5°
Length of haunch	Lh=3 m

Column section properties

533 x 210 x 101 UKB
Dimensions (mm): hc=536.7 bc=210 twc=10.8 tfc=17.4 rc=12.7
Properties (cm): Iyc=61500 Izc=2690 Wplyc=2610 Wplzc=399
Itc=101 Ac=129 iyc=21.834 izc=4.5665

Rafter section properties

457 x 191 x 67 UKB
Dimensions (mm): hr=453.4 br=189.9 twr=8.5 tfr=12.7 rr=10.2
Properties (cm): Iyr=29400 Izr=1450 Wplyr=1470 Wplzr=237
Itr=37.1 Ar=85.5 iyr=18.543 izr=4.1181

Cladding loading	dc=0.17 kN/m²
Purlin loading	dp=0.03 kN/m²
Rafter loading	dr=0.11 kN/m²
Reduced cladding load	rdc=0.06 kN/m²
Wall panel weight	wp=14 kN

SUMMARY

Overturning moment	**170.1 kNm**
Horizontal reaction	**10.136 kN**
Vertical reaction	**32 kN**

Number of bolts	Nb=6
Assumed diameter of bolt	bd=24 mm
Spacing in line with frame axis	spac=600 mm
Edge distance to tension bolts	k=50 mm
Spacing in longitudinal direct.	sb=300 mm

Selected baseplate thickness tp=35 mm
Tensile resistance per anchor FtRd=0.9*fub*As/(gamM2*10^3)=203.33 kN

Selected fillet weld size sw=8 mm
Selected fillet weld size sfw=8 mm

SUMMARY OF BASEPLATE REQUIREMENTS	**Size 700 mm x 400 mm x 35 mm**	
	Grade S 275 steel	
	Number of H.D. bolts	**6**
	Diameter of bolts	**M 24**
	Grade 8.8	
WELD SUMMARY		
TENSION	**Fillet weld**	**8 mm**
	Contact areas on the baseplate and column are machined to give a tight bearing contact.	
	The specified tension weld will be used for both flanges.	
WEB	**Fillet weld**	**8 mm**

Longitudinal stability to SCI P313 Section 2.8

Height of masonry wall Hwall=7 m
As the masonry wall is at least 75% of the height to the eaves provided it is connected to the column the code requirements for longitudinal stability will be satisfied.

Location: Ex4 - Long span example

Design of column bases subject to boundary conditions using the recommended procedures set out in The Steel Construction Institute publication "Single Storey Steel Framed Buildings in Fire Boundary Conditions". Calculations are in accordance with EC3 Part 1-1.

Span of portal frame	L=38 m
Eaves height	He=8.25 m
Frame centres	c2=6 m
Rafter pitch	theta=6°
Length of haunch	Lh=3.8 m

Column section properties

686 x 254 x 140 UKB
Dimensions (mm): hc=683.5 bc=253.7 twc=12.4 tfc=19 rc=15.2
Properties (cm): Iyc=136000 Izc=5180 Wplyc=4560 Wplzc=638
Itc=169 Ac=178 iyc=27.641 izc=5.3945

Rafter section properties

533 x 210 x 101 UKB
Dimensions (mm): hr=536.7 br=210 twr=10.8 tfr=17.4 rr=12.7
Properties (cm): Iyr=61500 Izr=2690 Wplyr=2610 Wplzr=399
Itr=101 Ar=129 iyr=21.834 izr=4.5665

Cladding loading	dc=0.2 kN/m²
Purlin loading	dp=0.08 kN/m²
Rafter loading	dr=0.166 kN/m²
Reduced cladding load	rdc=0.02 kN/m²
Wall panel weight	wp=10 kN

SUMMARY

Overturning moment	**350.03 kNm**
Horizontal reaction	**23.281 kN**
Vertical reaction	**40.324 kN**

Number of bolts	Nb=6
Assumed diameter of bolt	bd=30 mm
Spacing in line with frame axis	spac=650 mm
Edge distance to tension bolts	k=50 mm
Spacing in longitudinal direct.	sb=350 mm

Selected baseplate thickness tp=40 mm
Tensile resistance per anchor FtRd=0.9*fub*As/(gamM2*10^3)=323.14 kN

Selected fillet weld size sw=12 mm
Selected fillet weld size swc=12 mm
Selected fillet weld size sfw=8 mm

SUMMARY OF	**Size 875 mm x 450 mm x 40 mm**	
BASEPLATE	**Grade S 275 steel**	
REQUIREMENTS	**Number of H.D. bolts**	**6**
	Diameter of bolts	**M 30**
	Grade 8.8	
WELD SUMMARY		
TENSION	**Fillet weld**	**12 mm**
COMPRESSION	**Fillet weld**	**12 mm**
WEB	**Fillet weld**	**8 mm**

Longitudinal stability to SCI P313 Section 2.8

Height of masonry wall Hwall=6.2 m
As the masonry wall is at least 75% of the height to the eaves provided it is connected to the column the code requirements for longitudinal stability will be satisfied.

Location: Ex5 - Short span

Design of column bases subject to boundary conditions using the recommended procedures set out in The Steel Construction Institute publication "Single Storey Steel Framed Buildings in Fire Boundary Conditions". Calculations are in accordance with EC3 Part 1-1.

Span of portal frame	L=10 m
Eaves height	He=4.5 m
Frame centres	c2=5 m
Rafter pitch	theta=10°
Length of haunch	Lh=1 m

Column section properties

178 x 102 x 19 UKB
Dimensions (mm): hc=177.8 bc=101.2 twc=4.8 tfc=7.9 rc=7.6
Properties (cm): Iyc=1360 Izc=137 Wplyc=171 Wplzc=41.6
Itc=4.41 Ac=24.3 iyc=7.4811 izc=2.3744

Rafter section properties

178 x 102 x 19 UKB
Dimensions (mm): hr=177.8 br=101.2 twr=4.8 tfr=7.9 rr=7.6
Properties (cm): Iyr=1360 Izr=137 Wplyr=171 Wplzr=41.6
Itr=4.41 Ar=24.3 iyr=7.4811 izr=2.3744

Cladding loading	dc=0.12 kN/m²
Purlin loading	dp=0.07 kN/m²
Rafter loading	dr=0.038 kN/m²
Reduced cladding load	rdc=0.012 kN/m²
Wall panel weight	wp=8 kN

SUMMARY

Overturning moment	**4.7025 kNm**
Horizontal reaction	**1.0056 kN**
Vertical reaction	**11 kN**

Number of bolts	Nb=4
Assumed diameter of bolt	bd=20 mm
Spacing in line with frame axis	spac=200 mm
Edge distance to tension bolts	k=50 mm
Spacing in longitudinal direct.	sb=120 mm

Selected baseplate thickness tp=15 mm
Tensile resistance per anchor FtRd=0.9*fub*As/(gamM2*10^3)=70.56 kN

Selected fillet weld size sw=8 mm
Selected fillet weld size sfw=8 mm

SUMMARY OF BASEPLATE REQUIREMENTS	**Size 340 mm x 240 mm x 15 mm**	
	Grade S 275 steel	
	Number of H.D. bolts	**4**
	Diameter of bolts	**M 20**
	Grade 4.6	
WELD SUMMARY		
TENSION	**Fillet weld**	**8 mm**
	Contact areas on the baseplate and column are machined to give a tight bearing contact.	
	The specified tension weld will be used for both flanges.	
WEB	**Fillet weld**	**8 mm**

Longitudinal stability to SCI P313 Section 2.8

Height of masonry wall Hwall=4.5 m
As the masonry wall is at least 75% of the height to the eaves provided it is connected to the column the code requirements for longitudinal stability will be satisfied.

Location: Example 9, 'Beams subject to bending and torsion'

Simply supported steel channel unrestrained along its length

Calculations are in accordance with BS5950 and 'Beams Subject to Bending and Torsion' published by The Steel Construction Institute. The beam is considered as "torsion fixed, warping free".

Beam span L=4 m

Uniformly distributed load

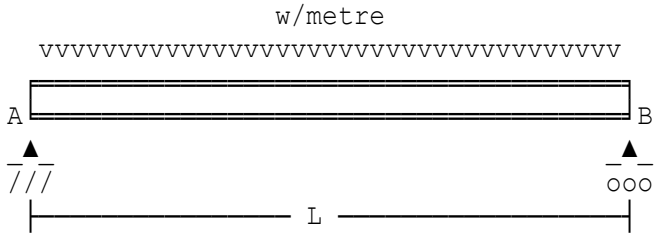

305 x 102 Tapered Channel.
Young's Modulus E=205 kN/mm²

Loading

Dead load wd=2 kN/m
Imposed load wi=0 kN/m

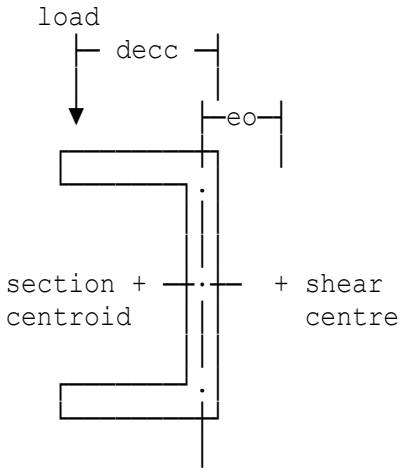

Distance between shear centre and centre of web eo =35.869 mm

load from the back of channel decc=-50 mm
Eccentricity ecc=decc-t/2+eo=-19.231 mm
Eccentricity value must be positive,
Eccentricity ecc=-ecc=19.231 mm

Shear force

Axial loading (inc.self weight) sw=0.7 kN/m (factored)
Shear force Fv=(sw+w)*L/2=7 kN

Check section for combined bending and torsion

Torsional stress in flange fw=E*10^3*Wno*10^2*phi''=2.9022 N/mm²

(i) Buckling Check

Equation 2.21

$$\frac{M}{Mb/mLT} + \frac{(fbyt + fw)}{py}\left[1 + \frac{0.5\,M}{Mb/mLT}\right] \leq 1.0$$

Equation 2.21 uf=mLT*M/Mb+((fbyt+fw)/py)*(1+0.5*mLT*M/Mb)=0.082079
Since uf ≤ 1, Section is adequate for buckling.

(ii) Local "Capacity" Check

Equation 2.22

fbx + fbyt + fw ≤ py

where:
bending normal stress fbx=M*(D/2)/Ix*100=12.997 N/mm²
combined stress fcb=fbx+fbyt+fw=16.196 N/mm²
Since fcb ≤ py (16.196 N/mm² ≤ 275 N/mm²), section is suitable.

SECTION	**305 x 102 Grade S 275**	
PROPERTIES	**Tapered Flange Channel**	
	Applied shear force	**7 kN**
	Shear capacity	**512.98 kN**
DESIGN	**Applied moment**	**7 kNm**
SUMMARY	**Buckling resistance**	**92.449 kNm**
	Buckling check	**0.082079 ≤ 1**
	Combined bending str.	**16.196 N/mm²**
	Design strength	**275 N/mm²**
	Midspan deflection	**0 mm**
	Limiting deflection	**11.111 mm**

Location: Example using parallel flange channel

Simply supported steel channel unrestrained along its length

Calculations are in accordance with BS5950 and 'Beams Subject to Bending and Torsion' published by The Steel Construction Institute. The beam is considered as "torsion fixed, warping free".

Beam span L=4 m

Concentrated load along length

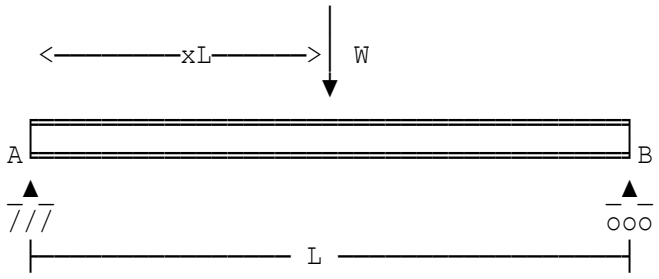

300 x 100 UKPFC
Young's Modulus E=205 kN/mm²

Loading

Dead load Wd=0.5 kN
Imposed load Wi=20 kN
Distance from support A to load xL=2 m

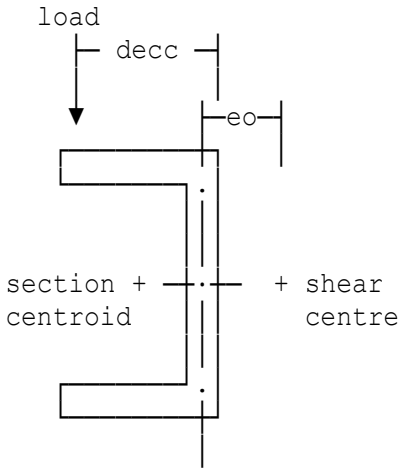

Distance between shear centre and centre of web eo =37.602 mm

load from the back of channel decc=-50 mm
Eccentricity ecc=decc-t/2+eo=-16.898 mm
Eccentricity value must be positive,
Eccentricity ecc=-ecc=16.898 mm

Shear force

Axial loading (inc.self weight) sw=0.7 kN/m (factored)
Max shear Fv=W/2+sw*L/2=17.75 kN

Check section for combined bending and torsion

Torsional stress in flange fw=E*10^3*Wno*10^2*phi''=20.923 N/mm²

(i) Buckling Check

Equation 2.21

$$\frac{M}{Mb/mLT} + \frac{(fbyt + fw)}{py}\left[1 + \frac{0.5\,M}{Mb/mLT}\right] \leq 1.0$$

Equation 2.21 uf=mLT*M/Mb+((fbyt+fw)/py)*(1+0.5*mLT*M/Mb)=0.30666
Since uf ≤ 1, Section is adequate for buckling.

(ii) Local "Capacity" Check

Equation 2.22

fbx + fbyt + fw ≤ py

where:
bending normal stress fbx=M*(D/2)/Ix*100=62.151 N/mm²
combined stress fcb=fbx+fbyt+fw=88.04 N/mm²
Since fcb ≤ py (88.04 N/mm² ≤ 345 N/mm²), section is suitable.

SECTION	**300 x 100 Grade S 355**	
PROPERTIES	**Parallel Flange Channel**	
	Applied shear force	**17.75 kN**
	Shear capacity	**558.9 kN**
DESIGN	**Applied moment**	**34.1 kNm**
SUMMARY	**Buckling resistance**	**130.31 kNm**
	Buckling check	**0.30666 ≤ 1**
	Combined bending str.	**88.04 N/mm²**
	Design strength	**345 N/mm²**
	Midspan deflection	**1.5806 mm**
	Limiting deflection	**11.111 mm**

Location: Example 4 'Design of steel beams in torsion'

Simply supported steel channel unrestrained along its length

Calculations are in accordance with BS EN 1993-1-1: 2005 and 'Design of Steel Beams in Torsion' published by SCI.
The beam is considered as "torsion fixed, warping free".

Beam span L=5 m

Uniformly distributed load

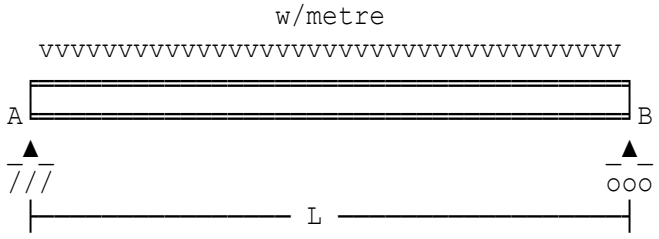

300 x 100 UKPFC

Loading

Permanent load wd=8.36 kN/m
Variable (non-permanent) load wi=0 kN/m

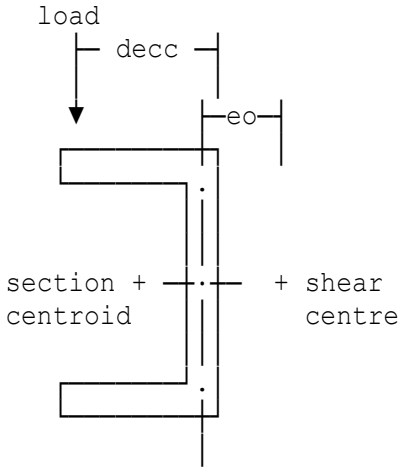

Distance between
shear centre and
centre of web
eo =37.602 mm

load from the back of channel decc=-55 mm
Eccentricity ecc=decc-tw/2+eo=-21.898 mm
Eccentricity value must be positive,
Eccentricity ecc=-ecc=21.898 mm

Shear force

Axial loading (inc.self weight) sw=0.63 kN/m (factored)
Shear force Fv=(sw+w)*L/2=29.79 kN

Design value of torsion effects

Allowing for elastic interaction between St Venant torsion and warping torsion.
Torsional bending constant a=((E/10^3*Iw)/(G*It))^0.5*10
=756.81 mm
Minor axis moment MzEd=M*phi=0.80095 kNm
Warping moment at mid-span MwEd=E*Iw*phi''*10^-6/(h-tf)
=0.46264 kNm

Bending resistance

Design bending moment MyEd=37.238 kNm
Bending resistance moment (y-y) MyRd=Wply*fy/10^3=169.87 kNm
Bending resistance moment (z-z) MzRd=Wplz*fy/10^3=39.22 kNm

Shear plastic resistance - Clause 6.2.6

Shear plastic resistance VplRd=Avz*fy/SQR(3)/1000=443.08 kN

Reduced shear resistance in the presence of torsion

at support z=0 mm

Reduced shear plastic resistance VTRd=(tr1-tr2)*VplRd=428.53 kN
As shear force less than shear plastic resistance, OK.

Lateral torsional buckling

Non-dimensional slenderness lamLT=L*100/(iz*96)=1.6643
Design Buckling resistance moment MbRd=chiLT*Wply*fy/10^3=49.476 kNm
Unity factor unitb=MyEd/MbRd=0.75264
Section chosen is suitable for lateral torsional buckling.

Interaction of LTB with minor axis bending and torsion

Critical moment Mcr=Wply*fy/(lamLT^2*1000)=61.323 kNm
Unity expression ut=MyEd/MbRd+Cmz*MzEd/MzRd+kw*kzw*ka*MwEd/MwRd
=0.84747
Section chosen is suitable.

SECTION PROPERTIES	**300 x 100 Grade S 275 Parallel Flange Channel**	
	Shear force	**29.79 kN**
	Shear resistance	**428.53 kN**
DESIGN SUMMARY	**Applied Moment**	**37.238 kNm**
	Buckling resistance	**49.476 kNm**
	LTB interaction	**0.84747 ≤ 1**
	Midspan deflection	**4.1562 mm**
	Angle of twist	**0.91288 deg**

Location: Point load at mid-span

Simply supported steel channel unrestrained along its length

Calculations are in accordance with BS EN 1993-1-1: 2005 and 'Design of Steel Beams in Torsion' published by SCI.
The beam is considered as "torsion fixed, warping free".

Beam span L=4 m

Concentrated load along length

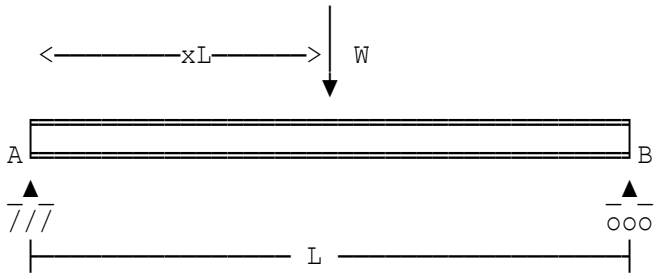

305 x 102 Tapered Channel.

Loading

Variable load Wd=30 kN
Variable (non-permanent) load Wi=0 kN
Distance from support A to load xL=2 m

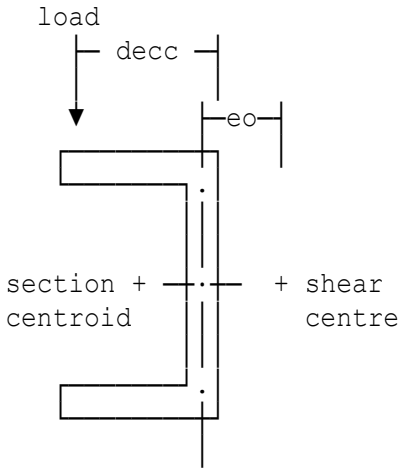

Distance between shear centre and centre of web eo =35.869 mm

load from the back of channel decc=-70 mm
Eccentricity ecc=decc-tw/2+eo=-39.231 mm
Eccentricity value must be positive,
Eccentricity ecc=-ecc=39.231 mm

Shear force

Axial loading (inc.self weight) sw=0.63 kN/m (factored)
Max shear Fv=W/2+sw*L/2=21.51 kN

Design value of torsion effects

Allowing for elastic interaction between St Venant torsion and warping torsion.
Torsional bending constant a=((E/10^3*Iw)/(G*It))^0.5*10
=779.79 mm
Torsional moment Td=W*ecc/10^3=1.5889 kNm
Distance along member z=alpha*L*1000=2000 mm
Minor axis moment MzEd=M*phi=1.4026 kNm
Warping moment at mid-span MwEd=E*Iw*phi''*10^-6/(h-tf)=2.111 kNm

Bending resistance

Design bending moment MyEd=41.76 kNm
Bending resistance moment (y-y) MyRd=Wply*fy/10^3=175.45 kNm
Bending resistance moment (z-z) MzRd=Wplz*fy/10^3=35.2 kNm

Shear plastic resistance - Clause 6.2.6

Shear plastic resistance VplRd=Avz*fy/SQR(3)/1000=517.37 kN

Reduced shear resistance in the presence of torsion

at support z=0 mm

Reduced shear plastic resistance VTRd=(tr1-tr2)*VplRd=479.05 kN
As shear force less than shear plastic resistance, OK.

Lateral torsional buckling

Non-dimensional slenderness lamLT=L*100/(iz*96)=1.4315
Design Buckling resistance moment MbRd=chiLT*Wply*fy/10^3=63.453 kNm
Unity factor unitb=MyEd/MbRd=0.65812
Section chosen is suitable for lateral torsional buckling.

Interaction of LTB with minor axis bending and torsion

Critical moment Mcr=Wply*fy/(lamLT^2*1000)=85.617 kNm
Unity expression ut=MyEd/MbRd+Cmz*MzEd/MzRd+kw*kzw*ka*MwEd/MwRd
=0.96864
Section chosen is suitable.

SECTION PROPERTIES	**305 x 102 Grade S 275**	
	Tapered Flange Channel	
	Shear force	**21.51 kN**
	Shear resistance	**479.05 kN**
DESIGN SUMMARY	**Applied Moment**	**41.76 kNm**
	Buckling resistance	**63.453 kNm**
	LTB interaction	**0.96864 ≤ 1**
	Midspan deflection	**2.4109 mm**
	Angle of twist	**1.4255 deg**

Location: SCI Example 1

Calculations are in accordance with BS5950 and 'Beams Subject to Bending and Torsion' published by The Steel Construction Institute. The beam is considered as "torsion fixed, warping free".

Beam span L=4 m

Concentrated load along length

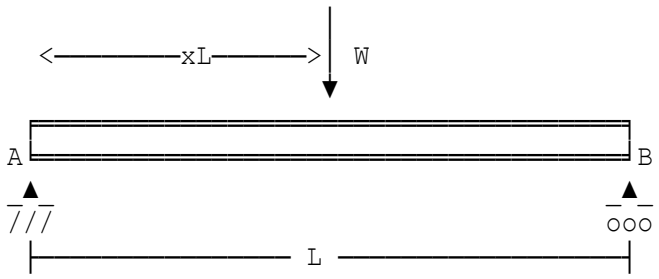

Dead load	Wd=0 kN
Imposed load	Wi=62.5 kN
Distance from support A to load	xL=2 m
Load Eccentricity	ecc=75 mm
254 x 254 x 89 UC.	
Young's Modulus	E=205 kN/mm²
Factored axial loading	sw=1.22 kN/m

UNIVERSAL COLUMN	**254 x 254 x 89 UC Grade S 275**	
	Shear force	**52.44 kN**
DESIGN	**Applied Moment**	**102.44 kNm**
SUMMARY	**Buckling resistance**	**298.01 kNm**
	Buckling check	**0.76447 ≤ 1**
	Combined bending str.	**202.26 N/mm²**
	Design strength	**265 N/mm²**
	Combined shear stress	**49.454 N/mm²**
	Shear strength	**159 N/mm²**
	Midspan deflection	**2.8427 mm**
	Limiting deflection	**11.111 mm**

Location: SCI Example 1

Calculations are in accordance with BS EN 1993-1-1: 2005 and 'Design of Steel Beams in Torsion' published by SCI.
The beam is considered as "torsion fixed, warping free".

Beam span L=4 m

Concentrated load along length

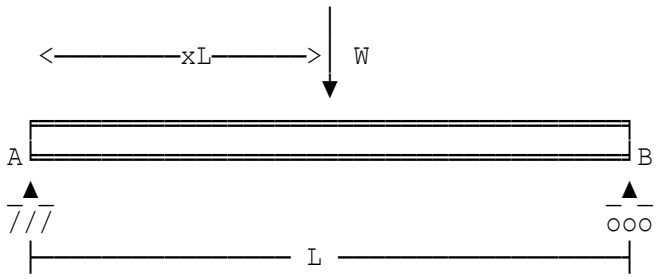

Permanent load Wd=74 kN
Variable (non-permanent) load Wi=0 kN
Distance from support A to load xL=2 m
Load Eccentricity ecc=75 mm
254 x 254 x 73 UKC
Dimensions (mm): h=254.1 b=254.6 tw=8.6 tf=14.2 r=12.7
Properties (cm): Iy=11400 Iz=3910 Wply=992 Wplz=465 It=57.6
Factored axial loading sw=1 kN/m
Eff.length between restraints LT=4 m
Coefficient C1 C1=1.35

BEAM SECTION	**254 x 254 x 73 UKC Grade S 275**	
	Shear force	**51.95 kN**
	Shear resistance	**378.68 kN**
DESIGN	**Applied moment**	**101.9 kNm**
SUMMARY	**Buckling resistance**	**272.8 kNm**
	Plastic interaction	**0.51136 ≤ 1**
	LTB interaction	**0.63316 ≤ 1**
	Midspan deflection	**4.2246 mm**
	Angle of twist	**2.2052 deg**

Location: Beam carrying udl

Calculations are in accordance with BS EN 1993-1-1: 2005 and 'Design of Steel Beams in Torsion' published by SCI.
The beam is considered as "torsion fixed, warping free".

Beam span L=4 m

Uniformly distributed load

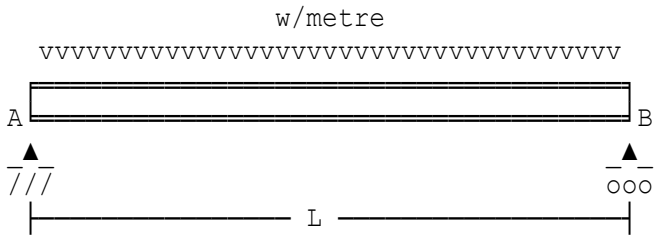

Permanent load wd=14 kN/m
Variable (non-permanent) load wi=0 kN/m
Load Eccentricity ecc=75 mm
254 x 254 x 73 UKC
Dimensions (mm): h=254.1 b=254.6 tw=8.6 tf=14.2 r=12.7
Properties (cm): Iy=11400 Iz=3910 Wply=992 Wplz=465 It=57.6
Factored axial loading sw=1 kN/m
Eff.length between restraints LT=4.8 m

BEAM SECTION	**254 x 254 x 73 UKC Grade S 275**	
	Shear force	**39.8 kN**
	Shear resistance	**392.51 kN**
DESIGN	**Applied moment**	**39.8 kNm**
SUMMARY	**Buckling resistance**	**272.8 kNm**
	Plastic interaction	**0.13967 ≤ 1**
	LTB interaction	**0.23241 ≤ 1**
	Midspan deflection	**2.0525 mm**
	Angle of twist	**1.0328 deg**

Location: Example 2. 'Beams subject to bending and torsion'.

Simply supported steel hollow section unrestrained along its length

Calculations are in accordance with BS5950 and 'Beams Subject to Bending and Torsion' published by The Steel Construction Institute. The beam is considered as "torsion fixed, warping free".

Beam span L=4 m

Concentrated load along length

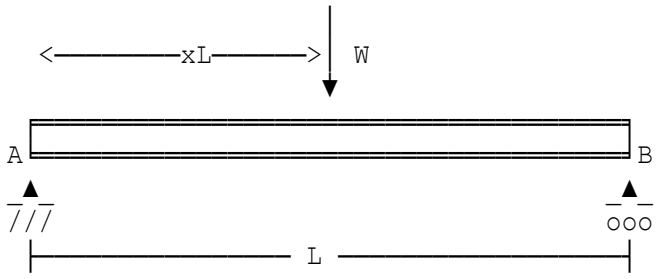

Dead load	Wd=0 kN
Imposed load	Wi=62.5 kN
Distance from support A to load	xL=2 m
Eccentricity	ecc=75 mm

250 x 150 x 8 RHS - Hot finished.
Properties (cm): A=60.8 rx=9.17 Zx=409 Sx=501 Ix=5110
J=5020 C=506 Zy=306 Sy=350 Iy=2300 ry=6.15

Young's Modulus	E=205 kN/mm²
Factored axial load (inc. s.w.)	sw=0.69 kN/m

HOT FINISHED	**In accordance with EN 10210**	
RECTANGULAR HOLLOW SECTION	**250 x 150 x 8 RHS Grade S 275**	
	Shear force	**51.38 kN**
DESIGN	**Factored moment**	**101.38 kNm**
SUMMARY	**Buckling resistance**	**134.97 kNm**
	Combined bending str.	**248.5 N/mm²**
	Design strength	**275 N/mm²**
	Combined shear stress	**23.153 N/mm²**
	Shear strength	**165 N/mm²**
	Midspan deflection	**7.9551 mm**
	Limiting deflection	**11.111 mm**

Location: Example 5 'Design of steel beams in torsion'

Simply supported steel hollow section unrestrained along its length

Calculations are in accordance with BS EN 1993-1-1: 2005 and 'Design of Steel Beams in Torsion' published by SCI.
The beam is considered as "torsion fixed, warping free".

Beam span L=5 m

Uniformly distributed load

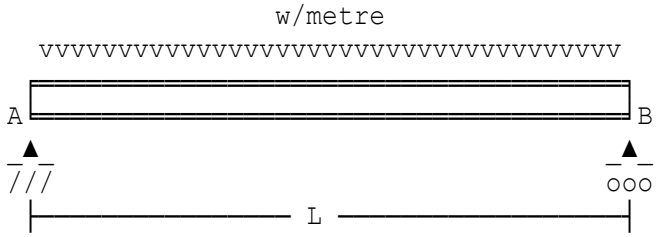

Permanent load wd=5.1 kN/m
Variable (non-permanent) load wi=0 kN/m
Eccentricity ecc=180 mm

300 x 100 x 8 RHS - Hot finished.
Properties (cm): A=60.8 iz=4.21 Wely=420 Wply=546 Iy=6310
It=3070 Wt=387 Welz=216 Wplz=245 Iz=1080 iy=10.2
Factored axial load (inc. s.w.) sw=4.85 kN/m
Eff.length between restraints LT=5 m

HOT FINISHED	**In accordance with EN 10210**	
RECTANGULAR HOLLOW SECTION	**300 x 100 x 8 RHS Grade S 355**	
	Shear force	**29.338 kN**
	Shear resistance	**898.11 kN**
DESIGN	**Applied moment**	**36.672 kNm**
SUMMARY	**Moment resistance**	**193.83 kNm**
	Torsional moment	**6.1965 kNm**
	Torsional resistance	**79.319 kNm**
	Midspan deflection	**5.3385 mm**
	Angle of twist	**0.065687 deg**
	Interaction factor	**0.21318 ≤ 1**

Location: Ex1 - Example from CIRIA/SCI publication

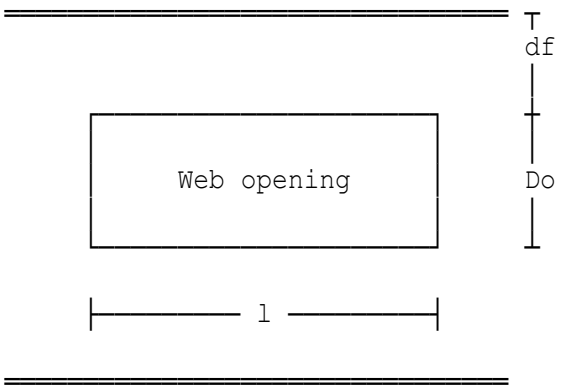

Beam with rectangular web opening

Calculations in accordance with BS5950-1:2000 and SCI CIRIA publication entitled 'Design for openings in the web of composite beams'.

Section properties

457 x 152 x 60 UB.

Young's Modulus	E=205 kN/mm²

Opening details

Depth of opening	Do=300 mm
Length of opening	l=500 mm

Factored loading at web opening

Factored shear force	V=37.4 kN
Factored bending moment	M=86.3 kNm

Moment capacity of steel section

Moment capacity	Mc=py*Sx/10^3=457.95 kNm

Moment capacities

Vierendeel moment capacity	Mv=0.9*(Mv1+Mv2)=31.998 kNm
Ultimate Vierendeel moment	Mu=V*l/10^3=18.7 kNm

Stiffener details

Stiffener outstand	bs=70 mm
Stiffener thickness	ts=10 mm
Distance from opening edge to stiffener centre line	d2=15 mm

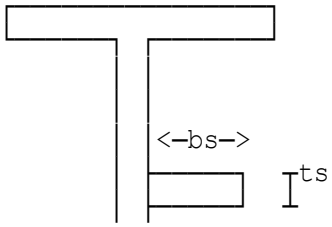

Single stiffener to one side of beam web will be provided.

Stiffener welding details

Fillet weld leg length	sw=6 mm
Overall length of stiffener	L=800 mm

UNIVERSAL BEAM	**457 x 152 x 60 UB Grade S 355**	
	Shear force	**37.4 kN**
DESIGN	**Factored moment**	**86.3 kNm**
SUMMARY	**Vierendeel moment**	**18.7 kNm**
	Vierendeel mt. cap.	**69.795 kNm**
SINGLE STIFFENER	**O/A length (2)**	**800 mm**
	width	**70 mm**
	thickness	**10 mm**
	Distance from open.	**15 mm**
STIFFENER WELDING	**Fillet weld size**	**6 mm**
DETAILS	**Electrode Grade**	**35**

Location: Ex1 - Stiffeners one side of web

Section properties

457 x 152 x 60 UKB
Young's Modulus E=210 kN/mm²

Opening details

Depth of opening ho=300 mm
Length of web opening lo=500 mm

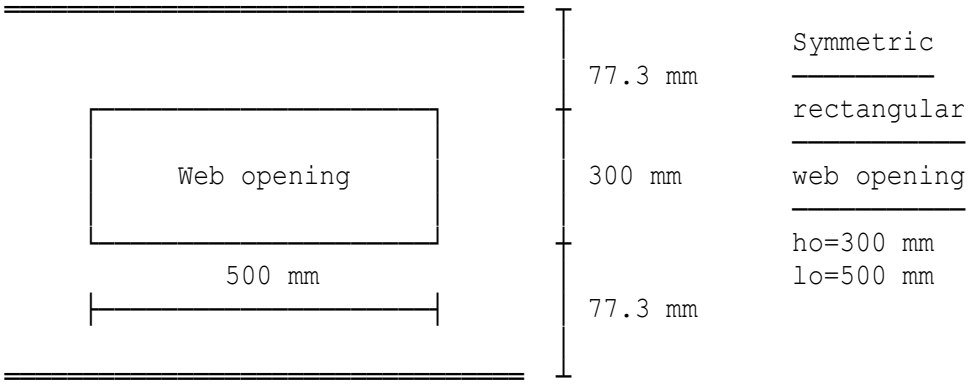

Factored loading at web opening

Factored shear force VEd=37.4 kN
Factored bending moment MyEd=86.3 kNm

Bending resistance of steel section

Bending resistance McRd=Wply*fy/(gamM0*10^3)=457.95 kNm

Vierendeel moment resistances

Vierendeel moment resistance MvRd=0.9*(Mv1+Mv2)=32.058 kNm
Ultimate Vierendeel moment MvEd=VEd*lo/10^3=18.7 kNm

Stiffener details

Stiffener thickness ts=10 mm
Stiffener outstand bs=80 mm
Distance from opening edge
to stiffener centre line d2=15 mm

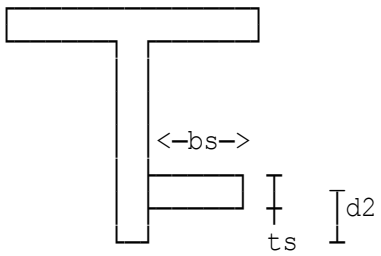

Single-sided stiffeners

Stiffener to one side
of beam web as shown.

Stiffener welding details

Weld design strength	fvwd=fu/SQR(3)/(betaw*gamM2)
	=241.2 N/mm²
Fillet weld leg length	sw=6 mm
Resistance of weld per mm run	FwRd=0.7*sw*fvwd/10^3=1.0131 kN/mm

For fillet welds on both sides, take the projection of stiffener

beyond the opening to be	lw=FaRd/(2*FwRd)=140.17 mm
Length beyond opening	lw1=20*ts=200 mm
Length beyond opening	lw2=200 mm
Minimum length beyond opening	lw=200 mm
Overall length of stiffener	L=900 mm

Shear buckling resistance of beam - Clause 6.2.6(6)

Clear web depth between flanges	hw=428 mm
Buckling ratio	hw't=hw/tw=52.84

Since hw/tw < 72e (58.58), no check for shear buckling is required.

Shear resistance of perforated beam section

As VRd ≥ VEd (307.84 kN ≥ 37.4 kN), the design shear resistance exceeds the design shear. Hence OK.

UNIVERSAL BEAM	**457 x 152 x 60 UKB Grade S 355**	
	Shear force	**37.4 kN**
DESIGN	**Factored moment**	**86.3 kNm**
SUMMARY	**Vierendeel moment**	**18.7 kNm**
	Vierendeel mt.resist.	**75.86 kNm**
WEB OPENING	**Rectangular opening:**	
	Depth 300 mm	
	Length 500 mm	
SINGLE STIFFENER	**O/A length (2No)**	**900 mm**
	Width	**80 mm**
	Thickness	**10 mm**
	Distance from open.	**15 mm**
STIFFENER WELDING	**Fillet weld size**	**6 mm**

The beam under consideration is non-composite.

Location: Ex2 - Plate girder with stiffeners one side of web

Section properties

Depth of section	h=460 mm
Width of section	b=155 mm
Thickness of flange	tf=15 mm
Thickness of web	tw=15 mm
Young's Modulus	E=210 kN/mm²

Opening details

Depth of opening	ho=300 mm
Length of web opening	lo=500 mm

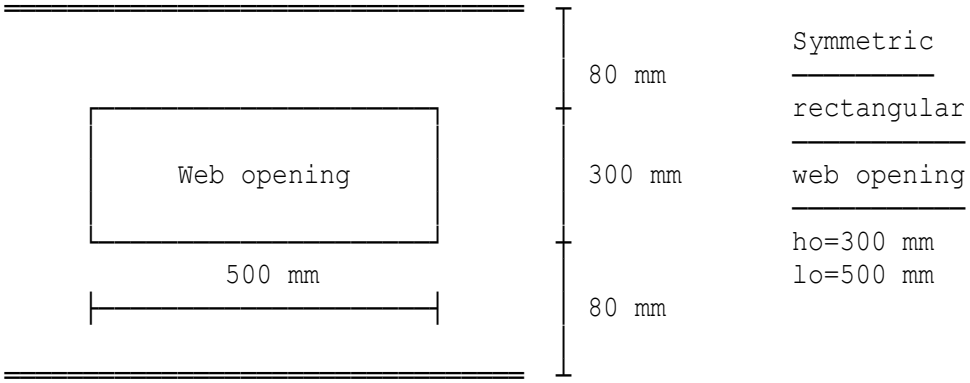

Factored loading at web opening

Factored shear force	VEd=37.4 kN
Factored bending moment	MyEd=86.3 kNm

Bending resistance of steel section

Bending resistance	McRd=fyw*b*tf*(h-tf)/(gamM0*10^6) =367.29 kNm

Vierendeel moment resistances

Vierendeel moment resistance	MvRd=0.9*(Mv1+Mv2)=30.339 kNm
Ultimate Vierendeel moment	MvEd=VEd*lo/10^3=18.7 kNm

Stiffener details

Stiffener thickness	ts=10 mm
Stiffener outstand	bs=80 mm
Distance from opening edge to stiffener centre line	d2=15 mm

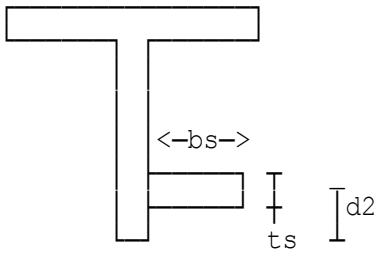

Single-sided stiffeners

Stiffener to one side of beam web as shown.

Stiffener welding details

Weld design strength	fvwd=fu/SQR(3)/(betaw*gamM2) =241.2 N/mm²
Fillet weld leg length	sw=6 mm
Resistance of weld per mm run	FwRd=0.7*sw*fvwd/10^3=1.0131 kN/mm

For fillet welds on both sides, take the projection of stiffener beyond the opening to be lw=FaRd/(2*FwRd)=140.17 mm

Length beyond opening	lw1=20*ts=200 mm
Length beyond opening	lw2=200 mm
Minimum length beyond opening	lw=200 mm
Overall length of stiffener	L=900 mm

Flange/web interface welds

Fillet weld leg length	sww=6 mm

Shear buckling resistance of beam - Clause 6.2.6(6)

Clear web depth between flanges	hw=430 mm
Buckling ratio	hw't=hw/tw=28.667

Since hw/tw < 72e (58.58), no check for shear buckling is required.

Shear resistance of perforated beam section

As VRd ≥ VEd (519.58 kN ≥ 37.4 kN), the design shear resistance exceeds the design shear. Hence OK.

	Shear force	**37.4 kN**
DESIGN	**Factored moment**	**86.3 kNm**
SUMMARY	**Vierendeel moment**	**18.7 kNm**
	Vierendeel mt.resist.	**75.423 kNm**
WEB OPENING	**Rectangular opening:**	
	Depth 300 mm	
	Length 500 mm	
SINGLE STIFFENER	**O/A length (2No)**	**900 mm**
	Width	**80 mm**
	Thickness	**10 mm**
	Distance from open.	**15 mm**
STIFFENER WELDING	**Fillet weld size**	**6 mm**

The beam under consideration is non-composite.

Location: Ex3 - Circular web opening without stiffeners

Section properties

457 x 152 x 60 UKB
Young's Modulus E=210 kN/mm²

Opening details

```
═══════════════════════════════════  ┬
              ├──lo─┤                │ 92.3 mm
            _┌ _ _ ┐_              ┼
          -  |     |  -             |
         -   |     |   -            |
        -  Web opening  -           | 270 mm
        -    |     |    -           |
         -   |     |   -            |
          -  |     |  -             |
            -|_ _ _|-              ┼
                                    | 92.3
═══════════════════════════════════  ┴
```

Symmetric circular web opening diameter D=300 mm

Equivalent rectangle dimensions lo and ho are as indicated below.
lo=135 mm
ho=270 mm

Factored loading at web opening

Factored shear force VEd=37.4 kN
Factored bending moment MyEd=86.3 kNm

Bending resistance of steel section

Bending resistance McRd=Wply*fy/(gamM0*10^3)=457.95 kNm

Vierendeel moment resistances

Vierendeel moment resistance MvRd=0.9*(Mv1+Mv2)=43.458 kNm
Ultimate Vierendeel moment MvEd=VEd*lo/10^3=5.049 kNm
As MvEd ≤ MvRd (5.049 kNm ≤ 43.458 kNm), the ultimate moment is within the moment resistance. Hence section is OK.

Shear buckling resistance of beam - Clause 6.2.6(6)

Clear web depth between flanges hw=428 mm
Buckling ratio hw't=hw/tw=52.84
Since hw/tw < 72e (58.58), no check for shear buckling is required.

Shear resistance of perforated beam section

As VRd ≥ VEd (307.84 kN ≥ 37.4 kN), the design shear resistance exceeds the design shear. Hence OK.

UNIVERSAL BEAM	**457 x 152 x 60 UKB Grade S 355**	
	Shear force	**37.4 kN**
DESIGN	**Factored moment**	**86.3 kNm**
SUMMARY	**Vierendeel moment**	**5.049 kNm**
	Vierendeel mt.resist.	**43.458 kNm**
WEB OPENING	**Circular opening:**	
	Diameter 300 mm	
	Radius 150 mm	

The beam under consideration is non-composite.

Location: Ex4 - Circular web opening with stiffeners

Section properties

457 x 152 x 60 UKB
Young's Modulus E=210 kN/mm²

Opening details

```
═══════════════════════════════════  ┬
              ├──lo─┤                │ 92.3 mm
            _┌ - - ┐_              ┼
          -  |     |  -             |
         -   |     |   -            |
        -  Web opening  -           | 270 mm
        -    |     |    -           |
         -   |     |   -            |
          -  |     |  -             |
            -|_ _ _|-              ┼
                                    | 92.3
═══════════════════════════════════  ┴
```

Symmetric circular web opening diameter D=300 mm

Equivalent rectangle dimensions lo and ho are as indicated below.
lo=135 mm
ho=270 mm

Factored loading at web opening

Factored shear force VEd=37.4 kN
Factored bending moment MyEd=86.3 kNm

Bending resistance of steel section

Bending resistance McRd=Wply*fy/(gamM0*10^3)=457.95 kNm

Vierendeel moment resistances

Vierendeel moment resistance MvRd=0.9*(Mv1+Mv2)=43.458 kNm
Ultimate Vierendeel moment MvEd=VEd*lo/10^3=5.049 kNm
As MvEd ≤ MvRd (5.049 kNm ≤ 43.458 kNm), the ultimate moment is within the moment resistance. Hence section is OK.

Shear buckling resistance of beam - Clause 6.2.6(6)

Clear web depth between flanges hw=428 mm
Buckling ratio hw't=hw/tw=52.84
Since hw/tw < 72e (58.58), no check for shear buckling is required.

Shear resistance of perforated beam section

As VRd ≥ VEd (307.84 kN ≥ 37.4 kN), the design shear resistance exceeds the design shear. Hence OK.

UNIVERSAL BEAM	**457 x 152 x 60 UKB Grade S 355**	
	Shear force	**37.4 kN**
DESIGN	**Factored moment**	**86.3 kNm**
SUMMARY	**Vierendeel moment**	**5.049 kNm**
	Vierendeel mt.resist.	**43.458 kNm**
WEB OPENING	**Circular opening:**	
	Diameter 300 mm	
	Radius 150 mm	

The beam under consideration is non-composite.

Location: Ex5 - Circular web opening SCI P355 Example

Section properties

457 x 191 x 74 UKB
Young's Modulus E=210 kN/mm²

Opening details

```
=================================  ┬
              ├──lo─┤              │ 93.5 mm
            _┌ - - ┐_             ┼
          -  |     |  -            |
         -   |     |   -           |
        -  Web opening  -          | 270 mm
        -    |     |    -          |
         -   |     |   -           |
          -  |     |  -            |
            -|_ _ _|-             ┼
                                   | 93.5
=================================  ┴
```

Symmetric circular web opening diameter D=300 mm

Equivalent rectangle dimensions lo and ho are as indicated below.
lo=135 mm
ho=270 mm

Factored loading at web opening

Factored shear force VEd=119 kN
Factored bending moment MyEd=299 kNm

Bending resistance of steel section

Bending resistance McRd=Wply*fy/(gamM0*10^3)=585.75 kNm

Shear connector resistance

Char.compr.cylinder strength fck=30 N/mm²
Slab depth hs=130 mm
Depth of profiling hp=60 mm
Stud ultimate tensile strength fus=450 N/mm²
Diameter of the stud shank d=19 mm
Secant modulus of elasticity Ecm=33 kN/m²
Nominal height of shear connector hsc=100 mm
Average trough width bo=160 mm

Bending resistance of Tees

Effective beam span Le=10 m
Distance to opening x=1950 mm
Number of shear studs nss=12
Vierendeel moment resistance MvRd=2*MbTRd+2*MtTRd+MvcRd=54.415 kNm
Ultimate Vierendeel moment MvEd=VEd*lo/10^3=16.065 kNm
As MvEd ≤ MvRd (16.065 kNm ≤ 54.415 kNm), the ultimate moment is within the moment resistance. Hence section is OK.

Shear buckling resistance of beam - Clause 6.2.6(6)

Clear web depth between flanges hw=428 mm
Buckling ratio hw't=hw/tw=47.556
Since hw/tw < 72e (58.58), no check for shear buckling is required.

Shear resistance of perforated beam section

Area of reinforcement Amesh=252 mm²
As VRd ≥ VEd (369.49 kN ≥ 119 kN), the design shear resistance exceeds the design shear. Hence OK.

UNIVERSAL BEAM	**457 x 191 x 74 UKB Grade S 355**	
	Shear force	**119 kN**
DESIGN	**Factored moment**	**299 kNm**
SUMMARY	**Vierendeel moment**	**16.065 kNm**
	Vierendeel mt.resist.	**54.415 kNm**
WEB OPENING	**Circular opening:**	
	Diameter 300 mm	
	Radius 150 mm	

The beam under consideration is a composite beam with the ribs of the metal decking transverse to the beam. The shear studs are 19 mm in diameter and have 100 mm overall nominal height. The headed shear studs are in accordance with EN ISO 13918.

Location: Ex6 - Circular web opening with stiffeners one side

Section properties

457 x 191 x 74 UKB
Young's Modulus E=210 kN/mm²

Opening details

```
=================================  ┬
              ├──lo─┤              │ 84.5 mm
            _┌ - - ┐_             ┼
          -  |     |  -            |
         -   |     |   -           |
        -  Web opening  -          | 288 mm
        -    |     |    -          |
         -   |     |   -           |
          -  |     |  -            |
            -|_ _ _|-             ┼
                                   | 84.5
=================================  ┴
```

Symmetric circular web opening diameter D=320 mm

Equivalent rectangle dimensions lo and ho are as indicated below.
lo=144 mm
ho=288 mm

Factored loading at web opening

Factored shear force VEd=119 kN
Factored bending moment MyEd=299 kNm

Bending resistance of steel section

Bending resistance McRd=Wply*fy/(gamM0*10^3)=585.75 kNm

Shear connector resistance

Char.compr.cylinder strength fck=30 N/mm²
Slab depth hs=130 mm
Stud ultimate tensile strength fus=450 N/mm²
Diameter of the stud shank d=19 mm
Secant modulus of elasticity Ecm=33 kN/m²
Nominal height of shear connector hsc=100 mm

Bending resistance of Tees

Effective beam span Le=10 m
Distance to opening x=1950 mm
Number of shear studs nss=12
Vierendeel moment resistance MvRd=2*MbTRd+2*MtTRd+MvcRd=45.275 kNm
Ultimate Vierendeel moment MvEd=VEd*lo/10^3=17.136 kNm

Stiffener details

Stiffener thickness ts=10 mm
Stiffener outstand bs=80 mm
Distance from opening edge
to stiffener centre line d2=15 mm

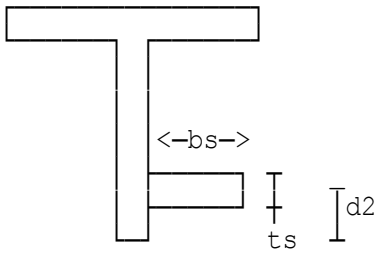

Single-sided stiffeners

Stiffener to one side
of beam web as shown.

Vierendeel moment resistance MvRd=2*MbTRd+2*MtTRd+MvcRd=95.216 kNm
Ultimate Vierendeel moment MvEd=VEd*lo/10^3=17.136 kNm

Stiffener welding details

Weld design strength fvwd=fu/SQR(3)/(betaw*gamM2)
=241.2 N/mm²
Fillet weld leg length sw=6 mm
Resistance of weld per mm run FwRd=0.7*sw*fvwd/10^3=1.0131 kN/mm
For fillet welds on both sides, take the projection of stiffener
beyond the opening to be lw=FaRd/(2*FwRd)=140.17 mm
Length beyond opening lw1=20*ts=200 mm
Length beyond opening lw2=200 mm
Minimum length beyond opening lw=200 mm
Overall length of stiffener L=600 mm

Shear buckling resistance of beam - Clause 6.2.6(6)

Clear web depth between flanges hw=428 mm
Buckling ratio hw't=hw/tw=47.556
Since hw/tw < 72e (58.58), no check for shear buckling is required.

Shear resistance of perforated beam section

Area of reinforcement Amesh=252 mm²
As VRd ≥ VEd (346.13 kN ≥ 119 kN), the design shear resistance
exceeds the design shear. Hence OK.

UNIVERSAL BEAM	**457 x 191 x 74 UKB Grade S 355**	
	Shear force	**119 kN**
DESIGN	**Factored moment**	**299 kNm**
SUMMARY	**Vierendeel moment**	**17.136 kNm**
	Vierendeel mt.resist.	**95.216 kNm**
WEB OPENING	**Circular opening:**	
	Diameter 320 mm	
	Radius 160 mm	
SINGLE STIFFENER	**O/A length (2No)**	**600 mm**
	Width	**80 mm**
	Thickness	**10 mm**
	Distance from open.	**15 mm**
STIFFENER WELDING	**Fillet weld size**	**6 mm**

The beam under consideration is a composite beam supporting a solid slab. The shear studs are 19 mm in diameter, 100 mm overall nominal height. The headed shear studs comply with EN ISO 13918.

Location: Ex7 - Circular web opening with stiffeners both sides

Section properties

457 x 191 x 74 UKB
Young's Modulus E=210 kN/mm²

Opening details

```
=================================  ┬
              ├──lo─┤              │ 84.5 mm
            _┌ - - ┐_             ┼
          -  |     |  -            |
         -   |     |   -           |
        -  Web opening  -          | 288 mm
        -    |     |    -          |
         -   |     |   -           |
          -  |     |  -            |
            -|_ _ _|-              ┼
                                   | 84.5
=================================  ┴
```

Symmetric circular web opening diameter D=320 mm

Equivalent rectangle dimensions lo and ho are as indicated below.
lo=144 mm
ho=288 mm

Factored loading at web opening

Factored shear force VEd=119 kN
Factored bending moment MyEd=299 kNm

Bending resistance of steel section

Bending resistance McRd=Wply*fy/(gamM0*10^3)=585.75 kNm

Shear connector resistance

Char.compr.cylinder strength fck=30 N/mm²
Slab depth hs=150 mm
Stud ultimate tensile strength fus=450 N/mm²
Diameter of the stud shank d=19 mm
Secant modulus of elasticity Ecm=33 kN/m²
Nominal height of shear connector hsc=100 mm

Bending resistance of Tees

Effective beam span Le=10 m
Distance to opening x=1950 mm
Number of shear studs nss=12
Vierendeel moment resistance MvRd=2*MbTRd+2*MtTRd+MvcRd=45.504 kNm
Ultimate Vierendeel moment MvEd=VEd*lo/10^3=17.136 kNm

Stiffener details

Stiffener thickness ts=10 mm
Stiffener outstand bs=80 mm
Distance from opening edge
to stiffener centre line d2=15 mm

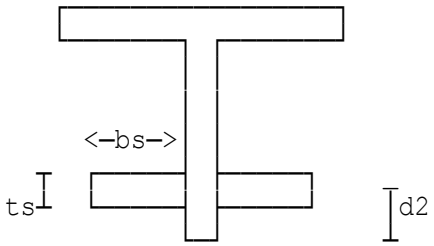

Double-sided stiffeners

Stiffeners will be provided on both sides of the web as shown.

Vierendeel moment resistance MvRd=2*MbTRd+2*MtTRd+MvcRd=147.75 kNm
Ultimate Vierendeel moment MvEd=VEd*lo/10^3=17.136 kNm

Stiffener welding details

Weld design strength fvwd=fu/SQR(3)/(betaw*gamM2)
=241.2 N/mm²
Fillet weld leg length sw=6 mm
Resistance of weld per mm run FwRd=0.7*sw*fvwd/10^3=1.0131 kN/mm
For fillet welds on both sides, take the projection of stiffener
beyond the opening to be lw=FaRd/(4*FwRd)=140.17 mm
Length beyond opening lw1=20*ts=200 mm
Length beyond opening lw2=200 mm
Minimum length beyond opening lw=200 mm
Overall length of stiffener L=600 mm

Shear buckling resistance of beam - Clause 6.2.6(6)

Clear web depth between flanges hw=428 mm
Buckling ratio hw't=hw/tw=47.556
Since hw/tw < 72e (58.58), no check for shear buckling is required.

Shear resistance of perforated beam section

Area of reinforcement Amesh=252 mm²
As VRd ≥ VEd (353.77 kN ≥ 119 kN), the design shear resistance exceeds the design shear. Hence OK.

UNIVERSAL BEAM	**457 x 191 x 74 UKB Grade S 355**	
	Shear force	**119 kN**
DESIGN	**Factored moment**	**299 kNm**
SUMMARY	**Vierendeel moment**	**17.136 kNm**
	Vierendeel mt.resist.	**147.75 kNm**
WEB OPENING	**Circular opening:**	
	Diameter 320 mm	
	Radius 160 mm	
DOUBLE STIFFENER	**O/A length (4No)**	**600 mm**
	Width	**80 mm**
	Thickness	**10 mm**
	Distance from open.	**15 mm**
STIFFENER WELDING	**Fillet weld size**	**6 mm**

The beam under consideration is a composite beam supporting a solid slab. The shear studs are 19 mm in diameter, 100 mm overall nominal height. The headed shear studs comply with EN ISO 13918.

Location: Ex8 - Rectangular web opening SCI P355 Example

Section properties

457 x 191 x 74 UKB
Young's Modulus E=210 kN/mm²

Opening details

Depth of opening ho=300 mm
Length of web opening lo=500 mm

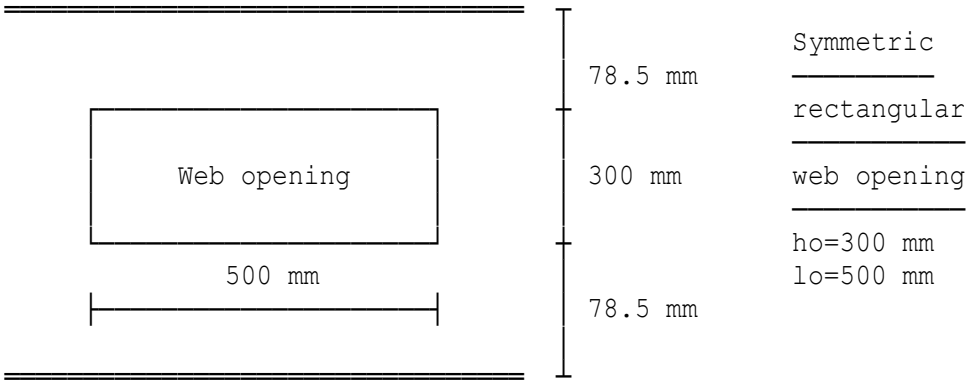

Factored loading at web opening

Factored shear force VEd=121 kN
Factored bending moment MyEd=310 kNm

Bending resistance of steel section

Bending resistance McRd=Wply*fy/(gamM0*10^3)=585.75 kNm

Shear connector resistance

Char.compr.cylinder strength fck=30 N/mm²
Slab depth hs=130 mm
Depth of profiling hp=60 mm
Shear resistance per connector PRd=57.2 kN

Bending resistance of Tees

Effective beam span Le=10 m
Distance to opening x=2050 mm
Number of shear studs nss=12
Stud spacing ssp=300 mm
Vierendeel moment resistance MvRd=2*MbTRd+2*MtTRd+MvcRd=55.745 kNm
Ultimate Vierendeel moment MvEd=VEd*lo/10^3=60.5 kNm

Stiffener details

Stiffener thickness ts=10 mm
Stiffener outstand bs=80 mm
Distance from opening edge
to stiffener centre line d2=15 mm

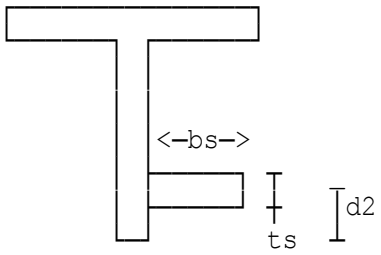

Single-sided stiffeners

Stiffener to one side
of beam web as shown.

Vierendeel moment resistance MvRd=2*MbTRd+2*MtTRd+MvcRd=102.5 kNm
Ultimate Vierendeel moment MvEd=VEd*lo/10^3=60.5 kNm

Stiffener welding details

Weld design strength fvwd=fu/SQR(3)/(betaw*gamM2)
=241.2 N/mm²
Fillet weld leg length sw=6 mm
Resistance of weld per mm run FwRd=0.7*sw*fvwd/10^3=1.0131 kN/mm
For fillet welds on both sides, take the projection of stiffener
beyond the opening to be lw=FaRd/(2*FwRd)=140.17 mm
Length beyond opening lw1=20*ts=200 mm
Length beyond opening lw2=200 mm
Minimum length beyond opening lw=200 mm
Overall length of stiffener L=900 mm

Shear buckling resistance of beam - Clause 6.2.6(6)

Clear web depth between flanges hw=428 mm
Buckling ratio hw't=hw/tw=47.556
Since hw/tw < 72e (58.58), no check for shear buckling is required.

Shear resistance of perforated beam section

Area of reinforcement Amesh=252 mm²
As VRd ≥ VEd (369.97 kN ≥ 121 kN), the design shear resistance
exceeds the design shear. Hence OK.

UNIVERSAL BEAM	**457 x 191 x 74 UKB Grade S 355**	
	Shear force	**121 kN**
DESIGN	**Factored moment**	**310 kNm**
SUMMARY	**Vierendeel moment**	**60.5 kNm**
	Vierendeel mt.resist.	**102.5 kNm**
WEB OPENING	**Rectangular opening:**	
	Depth 300 mm	
	Length 500 mm	
SINGLE STIFFENER	**O/A length (2No)**	**900 mm**
	Width	**80 mm**
	Thickness	**10 mm**
	Distance from open.	**15 mm**
STIFFENER WELDING	**Fillet weld size**	**6 mm**

The beam under consideration is a composite beam with the ribs of the metal decking transverse to the beam. The shear studs are 19 mm in diameter and have 100 mm overall nominal height. The headed shear studs are in accordance with EN ISO 13918.

Location: SCI Example

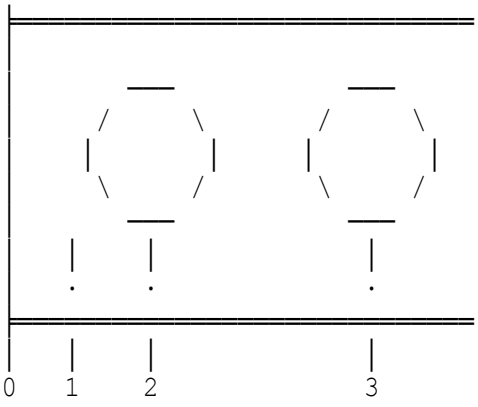

Simply supported steel beam

Calculations are in accordance with BS5950 and SCI publication SCI-P-100 entitled 'Design of Composite and Non-Composite Cellular Beams'.

Positions considered when determining shear, moment etc.

Beam span	L=10 m
457 x 191 x 67 UB.	
Young's Modulus	E=205 kN/mm²
Diameter of openings	Do=400 mm
Spacing of openings	S=600 mm

Section classification

Properties of tees

Properties of steel cellular beam

at centre line of opening

Loading details

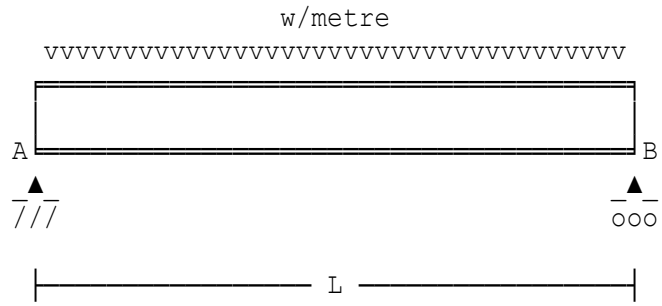

Loading

Uniformly distributed load

Unfactored dead load	Gku=7.14 kN/m
Unfactored imposed load	Qku=1.5 kN/m

Internal forces and moments

Overall beam flexural capacity

Maximum moment	M=w*L^2/8=154.95 kNm
Flexural capacity	Mp=677.57 kNm

Beam shear capacity

Shear at support	Vmax =61.98 kN
Shear capacity @ support	Pv=0.6*py*Avs/10^3=1134.5 kN
Shear at opening centre line	Vmax =55.782 kN (Maximum)
Shear capacity of Tees	Pvy=0.6*py*Avt/10^3=369.24 kN
Maximum horizontal shear	Vh=53.467 kN
Horizontal shear capacity	Pvh=0.6*py*Avwp/10^3=325.89 kN

Compression flange is fully restrained.

Web post strength

Vierendeel bending of Tees

```
      V/2
  T    ▲  |═══════/═══════════════════     θ° = angle theta
 ────▶  |  ·      /
        |  |──  /         ──             Critical section is
           ·θ°/\       /     \            at an angle θ° as
        __|/__ | ___ | _____ | ___ beam   shown in diagram.
                                  CL
```

Assumed angle for critical sect. theta=25°

Simplified deflection calculation

Total deflection DEF=DEF1+DEF2=12.182
Live load deflection (2.1149 mm) ≤ L/360=27.778 mm, hence OK.

Original Section

UNIVERSAL BEAM	**457 x 191 x 67 UB Grade S 355**	
CELLULAR	**626.61 x 191 x 67**	
	Opening size	**400 mm**
	Opening spacing	**600 mm**
	Shear force	**61.98 kN**
	Shear resistance	**1134.5 kN**
DESIGN	**Maximum moment**	**154.95 kNm**
SUMMARY	**Flexural capacity**	**677.57 kNm**

Location: Ex1 - UDL loading and restrained compression flange

```
 ╔═══════════════════════════════╗
 ╔═══════════════════════════════╗
 ¦        ├──── S ────┤         ¦
 ¦       ──            ──        ¦
 ¦     /     \        /     \    ¦
 ¦    |       |      |       |   ≈
 ¦     \     /        \     /    ¦
 ¦       ──            ──        ¦
 ¦    |   |  ├─ So ─┤   |        ¦
 ¦    .   .             .        ¦
 ╚═══════════════════════════════╝
_▲_  |   |             |        |
///  .   .             .        .
 |   |   |             |        |
 0   1   2             3        10
```

Simply supported steel beam

Calculations are in accordance with EC3 Part 1-1, SCI P355 entitled 'Design of Composite Beams With Large Web Openings' and SCI-P-100 (1990). Openings are placed centrally in the web depth.

Positions 0, 2 and 3 are considered when determining shear, moment etc.

In the diagram position 0 is the beam support, position 1 is the end web post, positions 2 to 9 represent the centre line of web openings and position 10 is the centre of the beam under consideration.

Beam span L=10 m

Initial beam

457 x 191 x 67 UKB
Dimensions (mm): h=453.4 b=189.9 tw=8.5 tf=12.7 r=10.2
Properties (cm): Iy=29400 Iz=1450 Wply=1470 Wplz=237 It=37.1

Strength of steel

Design strength fy=355 N/mm²
Young's Modulus E=210 kN/mm²

Cellular beam details

Diameter of openings ho=400 mm
Spacing of web openings S=600 mm
Overall depth of beam h=h'+ho/2-e'-10=616.61 mm

Partial factors for actions

Factor for permanent actions gamG=1.35
Factor for variable actions gamQ=1.5

Properties of Tees

Properties of steel cellular beam at CL of opening

Second moment of area of Tee I=2*(Itee+Atee*z'^2)=540.88E6 mm⁴
Plastic modulus Wply=2*(Atee*z')=1.8592E6 mm³
Moment resistance (Cl.6.2.5(2)) McRd=Wply*fy/(gamM0*10^6)=660.01 kNm

Loading details

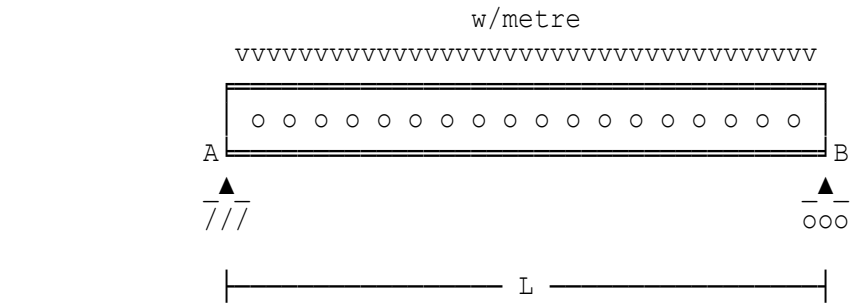

Loading

Uniformly distributed load

Unfactored permanent load Gku=9.87 kN/m
Unfactored variable load Qku=4.5 kN/m

Internal forces and moments

Postn	x	VEd	MEd	NEd	VEdh

Overall beam moment resistance - Clause 6.2.5

Beam shear resistance

The compression flange of the cellular beam is fully restrained.
Buckling resistance is MbRd=McRd=660.01 kNm

Web post strength

Web-post buckling resistance

Shear buckling resistance - EN 1993-1-1, Clause 6.2.6(6)

The shear buckling resistance should be determined in accordance with BS EN 1993-1-5 Clause 5.2 and 5.3.
As the ratio hw/tw > 72e (69.554 > 58.58), allowance needs to be made for the influence of the web opening on the shear buckling resistance of the web. Assume transverse stiffeners at supports.
Modified slenderness lamw=hw/(86.4*tw*e)=0.98943

Shear resistance at support VplRd=1074.2 kN
Reduced design shear resistance at support (web contribution only will be considered):
VbwRd=chiw*fy*hw*tw/(3^0.5*gamM1*1000)=864.01 kN

Vierendeel bending of Tees - using Sahmel's approach

```
    VEd/2
       ↑  |═══════════════════════
NEd    |  ·        /
 ──→   |  |      /                          Critical section is
       |  ├──  /        ──                  at an angle θ° as
       |     ·θ°/\       /     \             shown in diagram.
        __|/__ | ___ | _____ | ___ beam
                                  CL
```

Assumed angle for critical sect. theta=25°

Simplified deflection calculation

Total deflection DEF=DEFp+DEFv=20.591

Original Section		
UNIVERSAL BEAM	**457 x 191 x 67 UKB Grade S 355**	
CELLULAR	**616.61 x 191 x 67**	
	Opening size	**400 mm**
	Opening spacing	**600 mm**
	Support shear force	**100.37 kN**
	Reduced shear resistance	**864.01 kN**
	Shear @ opening centre line	**90.335 kN**
	Shear resistance	**339.62 kN**
DESIGN	**Maximum moment**	**250.93 kNm**
SUMMARY	**Moment resistance**	**660.01 kNm**
	Buckling resistance	**660.01 kNm**

Assume non-rigid end posts to EN 1993-1-5, Figure 5.1 & Table 5.1

Location: Ex2 - With point loads on beam

```
 ╔═══════════════════════════════╗
 ╔═══════════════════════════════╗
 ¦        ├──── S ────┤         ¦
 ¦       ──            ──        ¦
 ¦     /     \        /     \    ¦
 ¦    |       |      |       |   ≈
 ¦     \     /        \     /    ¦
 ¦       ──            ──        ¦
 ¦    |   |   ├─ So ─┤   |      ¦
 ¦    .   .              .      ¦
 ╚═══════════════════════════════╝
_▲_  |   |              |       |
///  .   .              .       .
 |   |   |              |       |
 0   1   2              3       10
```

Simply supported steel beam

Calculations are in accordance with EC3 Part 1-1, SCI P355 entitled 'Design of Composite Beams With Large Web Openings' and SCI-P-100 (1990). Openings are placed centrally in the web depth.

Positions 0, 2 and 3 are considered when determining shear, moment etc.

In the diagram position 0 is the beam support, position 1 is the end web post, positions 2 to 9 represent the centre line of web openings and position 10 is the centre of the beam under consideration.

Beam span	L=10 m

Initial beam

457 x 191 x 67 UKB
Dimensions (mm): h=453.4 b=189.9 tw=8.5 tf=12.7 r=10.2
Properties (cm): Iy=29400 Iz=1450 Wply=1470 Wplz=237 It=37.1

Strength of steel

Design strength	fy=355 N/mm²
Young's Modulus	E=210 kN/mm²

Cellular beam details

Diameter of openings	ho=400 mm
Spacing of web openings	S=600 mm
Overall depth of beam	h=h'+ho/2-e'-10=616.61 mm

Partial factors for actions

Factor for permanent actions	gamG=1.35
Factor for variable actions	gamQ=1.5

Properties of Tees

Properties of steel cellular beam at CL of opening

Second moment of area of Tee	I=2*(Itee+Atee*z'^2)=540.88E6 mm⁴
Plastic modulus	Wply=2*(Atee*z')=1.8592E6 mm³
Moment resistance (Cl.6.2.5(2))	McRd=Wply*fy/(gamM0*10^6)=660.01 kNm

Loading details

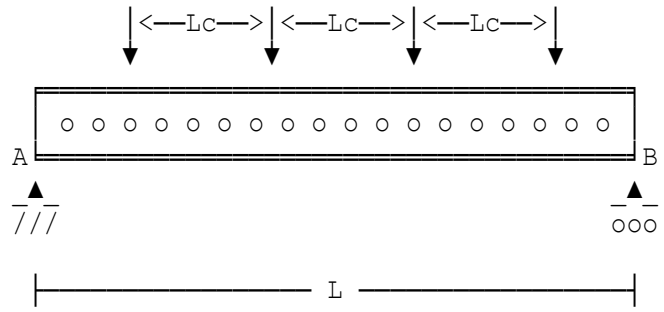

Loads are symmetrical about the beam CL.

Loading

Number of point loads	Nc=10
Unfactored permanent load	Gkc=7 kN
Unfactored variable load	Qkc=1.5 kN

Even spacing of loads along the length of the beam and distance to first load from start of the beam 0.90909 m

Loading details

Internal forces and moments

Postn	x	VEd	MEd	NEd	VEdh

Overall beam moment resistance - Clause 6.2.5

Beam shear resistance

The compression flange of the cellular beam is fully restrained.
Buckling resistance is MbRd=McRd=660.01 kNm

Web post strength

Web-post buckling resistance

Shear buckling resistance - EN 1993-1-1, Clause 6.2.6(6)

The shear buckling resistance should be determined in accordance with BS EN 1993-1-5 Clause 5.2 and 5.3.
As the ratio hw/tw > 72e (69.554 > 58.58), allowance needs to be made for the influence of the web opening on the shear buckling

resistance of the web. Assume transverse stiffeners at supports.
Modified slenderness lamw=hw/(86.4*tw*e)=0.98943
Shear resistance at support VplRd=1074.2 kN
Reduced design shear resistance at support (web contribution only will be considered):
VbwRd=chiw*fy*hw*tw/(3^0.5*gamM1*1000)=864.01 kN

Vierendeel bending of Tees - using Sahmel's approach

```
    VEd/2
        ↑  |═══════════════════════
NEd     |  ·        /
 ──────→|  |      /                          Critical section is
        |  |──  /        ──                  at an angle θ° as
        |  |
           ·θ°/\       /     \               shown in diagram.
       __|/__ | ___ | _____ | ___ beam
                                  CL
```

Assumed angle for critical sect. theta=25°

Simplified deflection calculation

Equivalent permanent UDL Gku=7.14 kN/m
Equivalent variable UDL Qku=1.5 kN/m
Total deflection DEF=DEFp+DEFv=12.381

Original Section

UNIVERSAL BEAM	**457 x 191 x 67 UKB Grade S 355**	
CELLULAR	**616.61 x 191 x 67**	
	Opening size	**400 mm**
	Opening spacing	**600 mm**
	Support shear force	**58.5 kN**
	Reduced shear resistance	**864.01 kN**
	Shear @ opening centre line	**58.5 kN**
	Shear resistance	**339.62 kN**
DESIGN	**Maximum moment**	**159.55 kNm**
SUMMARY	**Moment resistance**	**660.01 kNm**
	Buckling resistance	**660.01 kNm**

Assume non-rigid end posts to EN 1993-1-5, Figure 5.1 & Table 5.1

Location: Ex3 - UDL loading and unrestrained compression flange

```
 ╔═══════════════════════════════╗
 ╔═══════════════════════════════╗
 ¦        ├──── S ────┤         ¦
 ¦       ──             ──       ¦
 ¦     /     \        /     \    ¦
 ¦    |       |      |       |   ≈
 ¦     \     /        \     /    ¦
 ¦       ──             ──       ¦
 ¦    |   |   ├─ So ─┤   |      ¦
 ¦    .   .              .      ¦
 ╚═══════════════════════════════╝
_▲_  |   |              |       |
///  .   .              .       .
 |   |   |              |       |
 0   1   2              3       10
```

Simply supported steel beam

Calculations are in accordance with EC3 Part 1-1, SCI P355 entitled 'Design of Composite Beams With Large Web Openings' and SCI-P-100 (1990). Openings are placed centrally in the web depth.

Positions 0, 2 and 3 are considered when determining shear, moment etc.

In the diagram position 0 is the beam support, position 1 is the end web post, positions 2 to 9 represent the centre line of web openings and position 10 is the centre of the beam under consideration.

Beam span	L=9 m

Initial beam

457 x 191 x 67 UKB
Dimensions (mm): h=453.4 b=189.9 tw=8.5 tf=12.7 r=10.2
Properties (cm): Iy=29400 Iz=1450 Wply=1470 Wplz=237 It=37.1

Strength of steel

Design strength	fy=355 N/mm²
Young's Modulus	E=210 kN/mm²

Cellular beam details

Diameter of openings	ho=400 mm
Spacing of web openings	S=600 mm
Overall depth of beam	h=h'+ho/2-e'-10=616.61 mm

Partial factors for actions

Factor for permanent actions	gamG=1.25
Factor for variable actions	gamQ=1.5

Properties of Tees

Properties of steel cellular beam at CL of opening

Second moment of area of Tee	I=2*(Itee+Atee*z'^2)=540.88E6 mm^4
Plastic modulus	Wply=2*(Atee*z')=1.8592E6 mm^3
Moment resistance (Cl.6.2.5(2))	McRd=Wply*fy/(gamM0*10^6)=660.01 kNm

Loading details

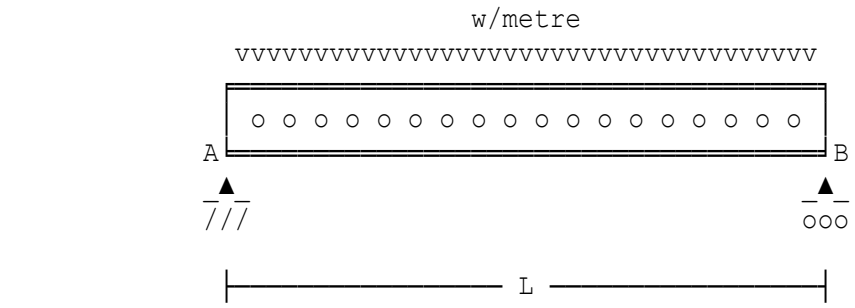

Loading

Uniformly distributed load

Unfactored permanent load	Gku=5 kN/m
Unfactored variable load	Qku=1.5 kN/m

Internal forces and moments

Postn	x	VEd	MEd	NEd	VEdh

Overall beam moment resistance - Clause 6.2.5

Beam shear resistance

Lateral torsional buckling

Eff.length between restraints LT=9 m

Web post strength

Web-post buckling resistance

Shear buckling resistance - EN 1993-1-1, Clause 6.2.6(6)

The shear buckling resistance should be determined in accordance with BS EN 1993-1-5 Clause 5.2 and 5.3.
As the ratio hw/tw > 72e (69.554 > 58.58), allowance needs to be made for the influence of the web opening on the shear buckling resistance of the web. Assume transverse stiffeners at supports.

Modified slenderness lamw=hw/(86.4*tw*e)=0.98943
Shear resistance at support VplRd=1074.2 kN
Reduced design shear resistance at support (web contribution only will be considered):
VbwRd=chiw*fy*hw*tw/(3^0.5*gamM1*1000)=864.01 kN

Vierendeel bending of Tees - using Sahmel's approach

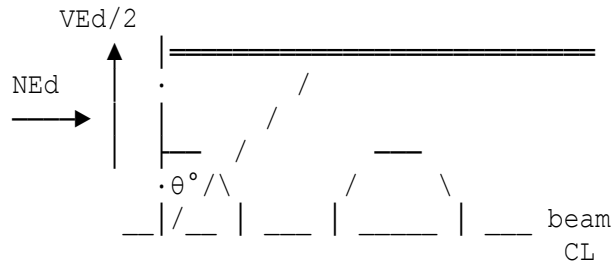

Critical section is at an angle θ° as shown in diagram.

Assumed angle for critical sect. theta=25°

Simplified deflection calculation

Total deflection DEF=DEFp+DEFv=6.111

Original Section

UNIVERSAL BEAM	**457 x 191 x 67 UKB Grade S 355**	
CELLULAR	**616.61 x 191 x 67**	
	Opening size	**400 mm**
	Opening spacing	**600 mm**
	Support shear force	**38.25 kN**
	Reduced shear resistance	**864.01 kN**
	Shear @ opening centre line	**33.15 kN**
	Shear resistance	**339.62 kN**
DESIGN	**Maximum moment**	**86.063 kNm**
SUMMARY	**Moment resistance**	**660.01 kNm**
	Buckling resistance	**105.99 kNm**

Assume non-rigid end posts to EN 1993-1-5, Figure 5.1 & Table 5.1

Location: Ex4 - One point load at mid span (option=1, Nc=1)

```
 ╔═══════════════════════════════╗
 ╔═══════════════════════════════╗
 |        ├──── S ────┤         |
 |       ──           ──        |
 |     /     \       /     \     |
 |    |       |     |       |    ≈
 |     \     /       \     /     |
 |       ──           ──        |
 |    |   |  ├─ So ─┤   |       |
 |    .   .            .        |
 ╚═══════════════════════════════╝
_▲_  |   |            |         |
///  .   .            .         .
 |   |   |            |         |
 0   1   2            3         10
```

Simply supported steel beam

Calculations are in accordance with EC3 Part 1-1, SCI P355 entitled 'Design of Composite Beams With Large Web Openings' and SCI-P-100 (1990). Openings are placed centrally in the web depth.

Positions 0, 2 and 3 are considered when determining shear, moment etc.

In the diagram position 0 is the beam support, position 1 is the end web post, positions 2 to 9 represent the centre line of web openings and position 10 is the centre of the beam under consideration.

Beam span L=10 m

Initial beam

457 x 191 x 67 UKB
Dimensions (mm): h=453.4 b=189.9 tw=8.5 tf=12.7 r=10.2
Properties (cm): Iy=29400 Iz=1450 Wply=1470 Wplz=237 It=37.1

Strength of steel

Design strength	fy=355 N/mm²
Young's Modulus	E=210 kN/mm²

Cellular beam details

Diameter of openings	ho=400 mm
Spacing of web openings	S=600 mm
Overall depth of beam	h=h'+ho/2-e'-10=616.61 mm

Partial factors for actions

Factor for permanent actions	gamG=1.35
Factor for variable actions	gamQ=1.5

Properties of Tees

Properties of steel cellular beam at CL of opening

Second moment of area of Tee	I=2*(Itee+Atee*z'^2)=540.88E6 mm⁴
Plastic modulus	Wply=2*(Atee*z')=1.8592E6 mm³
Moment resistance (Cl.6.2.5(2))	McRd=Wply*fy/(gamM0*10^6)=660.01 kNm

Loading details

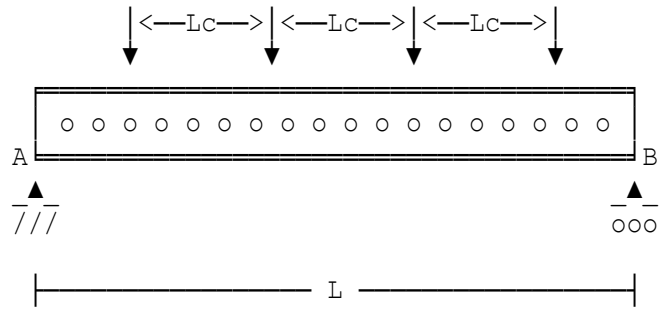

Loads are symmetrical about the beam CL.

Loading

Number of point loads	Nc=1
Unfactored permanent load	Gkc=40 kN
Unfactored variable load	Qkc=10 kN

Even spacing of loads along the length of the beam and distance to first load from start of the beam 5 m

Loading details

Internal forces and moments

Postn	x	VEd	MEd	NEd	VEdh

Overall beam moment resistance - Clause 6.2.5

Beam shear resistance

Lateral torsional buckling

Eff.length between restraints	LT=5 m
Coefficient C1	C1=1.35

Web post strength

Web-post buckling resistance

Shear buckling resistance - EN 1993-1-1, Clause 6.2.6(6)

The shear buckling resistance should be determined in accordance with BS EN 1993-1-5 Clause 5.2 and 5.3.
As the ratio hw/tw > 72e (69.554 > 58.58), allowance needs to be made for the influence of the web opening on the shear buckling resistance of the web. Assume transverse stiffeners at supports.

Modified slenderness lamw=hw/(86.4*tw*e)=0.98943
Shear resistance at support VplRd=1074.2 kN
Reduced design shear resistance at support (web contribution only will be considered):
VbwRd=chiw*fy*hw*tw/(3^0.5*gamM1*1000)=864.01 kN

Vierendeel bending of Tees - using Sahmel's approach

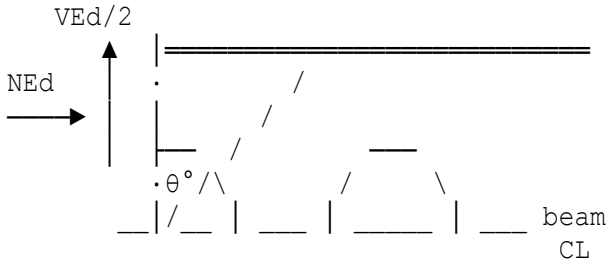

Critical section is at an angle θ° as shown in diagram.

Assumed angle for critical sect. theta=25°

Simplified deflection calculation

Total deflection DEF=DEFp+DEFv=11.463

Original Section

UNIVERSAL BEAM	**457 x 191 x 67 UKB Grade S 355**	
CELLULAR	**616.61 x 191 x 67**	
	Opening size	**400 mm**
	Opening spacing	**600 mm**
	Support shear force	**34.5 kN**
	Reduced shear resistance	**864.01 kN**
	Shear @ opening centre line	**34.5 kN**
	Shear resistance	**339.62 kN**
DESIGN	**Maximum moment**	**172.5 kNm**
SUMMARY	**Moment resistance**	**660.01 kNm**
	Buckling resistance	**292.03 kNm**

Assume non-rigid end posts to EN 1993-1-5, Figure 5.1 & Table 5.1

Location: Ex5 - With three point loads on beam (option=1, Nc=3)

```
 ╔═══════════════════════════════╗
 ╔═══════════════════════════════╗
 ╔═══════════════════════════════╗
```

Properties of steel cellular beam at CL of opening

Second moment of area of Tee	I=2*(Itee+Atee*z'^2)=540.88E6 mm⁴
Plastic modulus	Wply=2*(Atee*z')=1.8592E6 mm³
Moment resistance (Cl.6.2.5(2))	McRd=Wply*fy/(gamM0*10^6)=660.01 kNm

Loading details

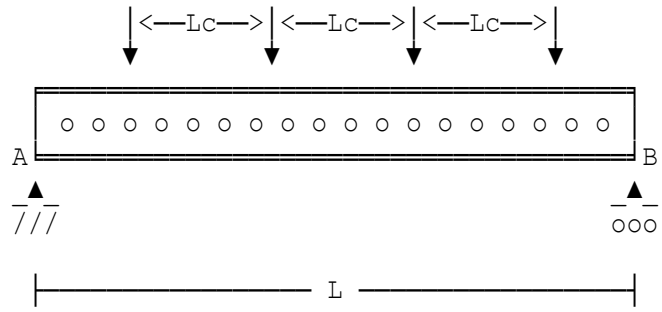

Loads are symmetrical about the beam CL.

Loading

Number of point loads	Nc=3
Unfactored permanent load	Gkc=7 kN
Unfactored variable load	Qkc=1.5 kN

Even spacing of loads along the length of the beam and distance to first load from start of the beam 2 m

Loading details

Internal forces and moments

Postn	x	VEd	MEd	NEd	VEdh

Overall beam moment resistance - Clause 6.2.5

Beam shear resistance

Lateral torsional buckling

Eff.length between restraints LT=4 m

Web post strength

Web-post buckling resistance

Shear buckling resistance - EN 1993-1-1, Clause 6.2.6(6)

The shear buckling resistance should be determined in accordance with BS EN 1993-1-5 Clause 5.2 and 5.3.
As the ratio hw/tw > 72e (69.554 > 58.58), allowance needs to be made for the influence of the web opening on the shear buckling resistance of the web. Assume transverse stiffeners at supports.
Modified slenderness lamw=hw/(86.4*tw*e)=0.98943
Shear resistance at support VplRd=1074.2 kN
Reduced design shear resistance at support (web contribution only will be considered):
VbwRd=chiw*fy*hw*tw/(3^0.5*gamM1*1000)=864.01 kN

Vierendeel bending of Tees - using Sahmel's approach

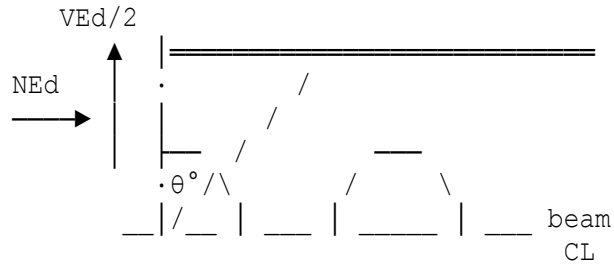

Critical section is at an angle θ° as shown in diagram.

Assumed angle for critical sect. theta=25°

Simplified deflection calculation

Total deflection DEF=DEFp+DEFv=6.6103

Original Section		
UNIVERSAL BEAM	**457 x 191 x 67 UKB Grade S 355**	
CELLULAR	**616.61 x 191 x 67**	
	Opening size	**400 mm**
	Opening spacing	**600 mm**
	Support shear force	**17.55 kN**
	Reduced shear resistance	**864.01 kN**
	Shear @ opening centre line	**17.55 kN**
	Shear resistance	**339.62 kN**
DESIGN	**Maximum moment**	**58.5 kNm**
SUMMARY	**Moment resistance**	**660.01 kNm**
	Buckling resistance	**294.08 kNm**

Assume non-rigid end posts to EN 1993-1-5, Figure 5.1 & Table 5.1

Location: Ex6 - With three point loads on beam (option=2, Nc=2)

```
 ╔═══════════════════════════════╗
 ╔═══════════════════════════════╗
 ¦        ├──── S ────┤         ¦
 ¦       ──             ──       ¦
 ¦     /     \        /     \    ¦
 ¦    |       |      |       |   ≈
 ¦     \     /        \     /    ¦
 ¦       ──             ──       ¦
 ¦   |   |   ├─ So ─┤   |       ¦
 ¦   .   .               .       ¦
 ╚═══════════════════════════════╝
_▲_  |   |               |       |
///  .   .               .       .
 |   |   |               |       |
 0   1   2               3       10
```

Simply supported steel beam

Calculations are in accordance with EC3 Part 1-1, SCI P355 entitled 'Design of Composite Beams With Large Web Openings' and SCI-P-100 (1990). Openings are placed centrally in the web depth.

Positions 0, 2 and 3 are considered when determining shear, moment etc.

In the diagram position 0 is the beam support, position 1 is the end web post, positions 2 to 9 represent the centre line of web openings and position 10 is the centre of the beam under consideration.

Beam span L=9 m

Initial beam

457 x 191 x 67 UKB
Dimensions (mm): h=453.4 b=189.9 tw=8.5 tf=12.7 r=10.2
Properties (cm): Iy=29400 Iz=1450 Wply=1470 Wplz=237 It=37.1

Strength of steel

Design strength fy=355 N/mm²
Young's Modulus E=210 kN/mm²

Cellular beam details

Diameter of openings ho=400 mm
Spacing of web openings S=600 mm
Overall depth of beam h=h'+ho/2-e'-10=616.61 mm

Partial factors for actions

Factor for permanent actions gamG=1.35
Factor for variable actions gamQ=1.5

Properties of Tees

Properties of steel cellular beam at CL of opening

Second moment of area of Tee	I=2*(Itee+Atee*z'^2)=540.88E6 mm⁴
Plastic modulus	Wply=2*(Atee*z')=1.8592E6 mm³
Moment resistance (Cl.6.2.5(2))	McRd=Wply*fy/(gamM0*10^6)=660.01 kNm

Loading details

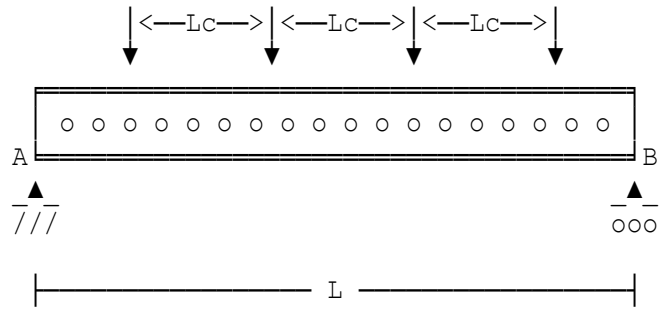

Loads are symmetrical about the beam CL.

Loading

Number of point loads	Nc=2
Unfactored permanent load	Gkc=7 kN
Unfactored variable load	Qkc=1.5 kN

Even spacing of loads along the length of the beam and distance to first load from start of the beam 3 m

Loading details

Internal forces and moments

Postn	x	VEd	MEd	NEd	VEdh

Overall beam moment resistance - Clause 6.2.5

Beam shear resistance

Lateral torsional buckling

Eff.length between restraints LT=5 m

Web post strength

Web-post buckling resistance

Shear buckling resistance - EN 1993-1-1, Clause 6.2.6(6)

The shear buckling resistance should be determined in accordance with BS EN 1993-1-5 Clause 5.2 and 5.3.
As the ratio hw/tw > 72e (69.554 > 58.58), allowance needs to be made for the influence of the web opening on the shear buckling resistance of the web. Assume transverse stiffeners at supports.
Modified slenderness lamw=hw/(86.4*tw*e)=0.98943
Shear resistance at support VplRd=1074.2 kN
Reduced design shear resistance at support (web contribution only will be considered):
VbwRd=chiw*fy*hw*tw/(3^0.5*gamM1*1000)=864.01 kN

Vierendeel bending of Tees - using Sahmel's approach

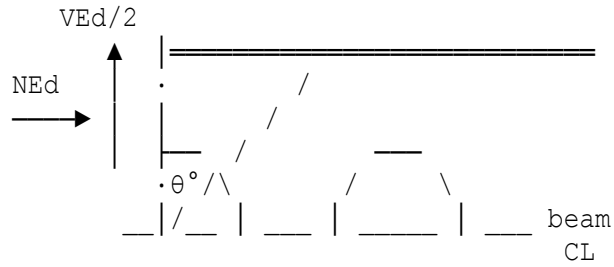

Critical section is at an angle θ° as shown in diagram.

Assumed angle for critical sect. theta=25°

Simplified deflection calculation

Total deflection DEF=DEFp+DEFv=2.4204

Original Section		
UNIVERSAL BEAM	**457 x 191 x 67 UKB Grade S 355**	
CELLULAR	**616.61 x 191 x 67**	
	Opening size	**400 mm**
	Opening spacing	**600 mm**
	Support shear force	**11.7 kN**
	Reduced shear resistance	**864.01 kN**
	Shear @ opening centre line	**11.7 kN**
	Shear resistance	**339.62 kN**
DESIGN	**Maximum moment**	**35.1 kNm**
SUMMARY	**Moment resistance**	**660.01 kNm**
	Buckling resistance	**227.63 kNm**

Assume non-rigid end posts to EN 1993-1-5, Figure 5.1 & Table 5.1

Location: Ex1 - Equal angle simplified method

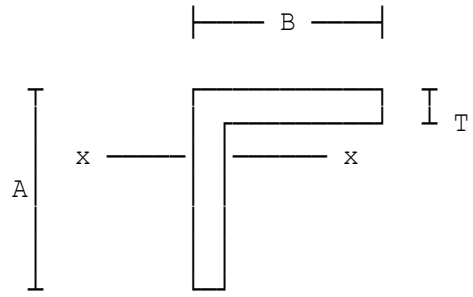

Heel of the equal angle
is in compression.

Length of beam	L=4 m
200 x 200 x 16 mm Equal Angle.	
Young's Modulus	E=205 kN/mm²
Dead load factor	gamd=1.4
Imposed load factor	gami=1.6
Dist. from left support to start	Lau(1)=0 m
Distance from left support to end	Lbu(1)=4 m
Dead load (unfactored)	Gku(1)=4 kN/m
Imposed load (unfactored)	Qku(1)=3 kN/m
Maximum span bending moment	20.8 kNm
Design shear force	Fv=20.8 kN
Length between restraint points	Lv=4 m

EQUAL ANGLE	**200 x 200 x 16 Grade S 275**	
	Heel of angle in compression	
DESIGN	**Max. shear force**	**20.8 kN**
SUMMARY	**Shear capacity**	**475.2 kN**
	Max. applied moment	**20.8 kNm**
	Moment capacity	**44.441 kNm**
	Buckling resistance	**35.552 kNm**
	Moment factor (mLT)	**0.925**
	Resistance (Mb/mLT)	**38.435 kNm**
	Unfactored DL defln	**2.7795 mm**
	Unfactored LL defln	**2.0846 mm**
	Limiting deflection	**11.111 mm**
Unfactored end shears	**DL shear at LHE**	**8 kN**
	LL shear at LHE	**6 kN**
	DL shear at RHE	**8 kN**
	LL shear at RHE	**6 kN**

Location: Ex2 - Equal angle (same example - basic method)

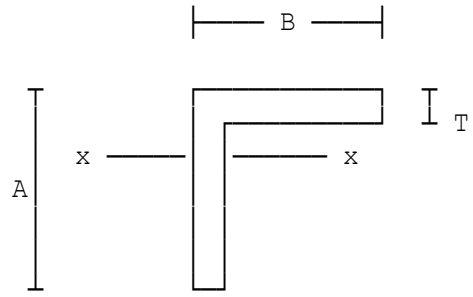

Heel of the equal angle is in compression.

Length of beam	L=4 m
200 x 200 x 16 mm Equal Angle.	
Young's Modulus	E=205 kN/mm²
Dead load factor	gamd=1.4
Imposed load factor	gami=1.6
Dist. from left support to start	Lau(1)=0 m
Distance from left support to end	Lbu(1)=4 m
Dead load (unfactored)	Gku(1)=4 kN/m
Imposed load (unfactored)	Qku(1)=3 kN/m
Maximum span bending moment	20.8 kNm
Design shear force	Fv=20.8 kN
Length between restraint points	Lv=4 m

EQUAL ANGLE	**200 x 200 x 16 Grade S 275**	
	Heel of angle in compression	
DESIGN	**Max. shear force**	**20.8 kN**
SUMMARY	**Shear capacity**	**475.2 kN**
	Buckling resistance	**65.633 kNm**
	Moment factor (mLT)	**0.925**
	Resistance (Mb/mLT)	**70.955 kNm**
	Annex I.3 combined stresses < py	**275 N/mm²**
	Compression	**166.74 N/mm²**
	Buckling	**170.62 N/mm²**
	Unfactored DL defln	**2.7795 mm**
	Unfactored LL defln	**2.0846 mm**
	Limiting deflection	**11.111 mm**
Unfactored end shears	**DL shear at LHE**	**8 kN**
	LL shear at LHE	**6 kN**
	DL shear at RHE	**8 kN**
	LL shear at RHE	**6 kN**

Location: Ex3 - Equal angle (slender section)

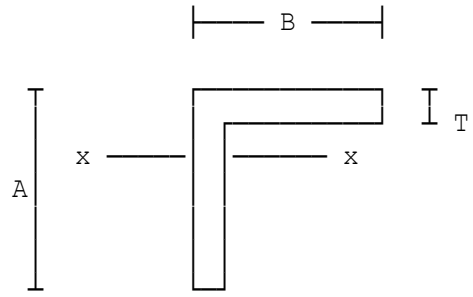

Heel of the equal angle
is in compression.

Length of beam	L=3 m
120 x 120 x 8 mm Equal Angle.	
Young's Modulus	E=205 kN/mm²
Dead load factor	gamd=1.4
Imposed load factor	gami=1.6
Dist. from left support to start	Lau(1)=0 m
Distance from left support to end	Lbu(1)=3 m
Dead load (unfactored)	Gku(1)=2 kN/m
Imposed load (unfactored)	Qku(1)=1 kN/m
Maximum span bending moment	4.95 kNm
Design shear force	Fv=6.6 kN
Length between restraint points	Lv=3 m

EQUAL ANGLE	**120 x 120 x 8 Grade S 355**	
	Heel of angle in compression	
DESIGN	**Max. shear force**	**6.6 kN**
SUMMARY	**Shear capacity**	**184.03 kN**
	Buckling resistance	**11.626 kNm**
	Moment factor (mLT)	**0.925**
	Resistance (Mb/mLT)	**12.569 kNm**
	Annex I.3 combined	
	stresses < py	**355 N/mm²**
	Compression	**239.78 N/mm²**
	Buckling	**260.64 N/mm²**
	Unfactored DL defln	**3.9728 mm**
	Unfactored LL defln	**1.9864 mm**
	Limiting deflection	**8.3333 mm**
Unfactored end shears	**DL shear at LHE**	**3 kN**
	LL shear at LHE	**1.5 kN**
	DL shear at RHE	**3 kN**
	LL shear at RHE	**1.5 kN**

Location: Ex4 - Unequal angle short leg in compression

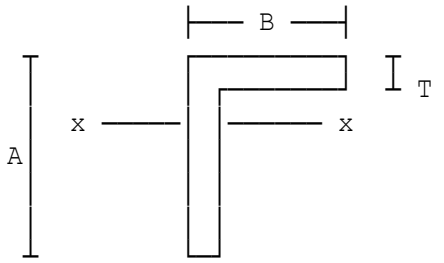

The short leg of the unequal angle is in compression.

Length of beam	L=4 m
200 x 150 x 18 mm Unequal Angle.	
Young's Modulus	E=205 kN/mm²
Dead load factor	gamd=1.4
Imposed load factor	gami=1.6
Dist. from left support to start	Lau(1)=0 m
Distance from left support to end	Lbu(1)=4 m
Dead load (unfactored)	Gku(1)=3 kN/m
Imposed load (unfactored)	Qku(1)=2.5 kN/m
Maximum span bending moment	16.4 kNm
Design shear force	Fv=16.4 kN
Length between restraint points	Lv=4 m

UNEQUAL ANGLE	**200 x 150 x 18 Grade S 275**	
	Short leg in compression	
DESIGN	**Max. shear force**	**16.4 kN**
SUMMARY	**Shear capacity**	**515.16 kN**
	Buckling resistance	**53.564 kNm**
	Moment factor (mLT)	**0.925**
	Resistance (Mb/mLT)	**57.907 kNm**
	Annex I.3 combined	
	stresses < py	**265 N/mm²**
	Compression	**142.13 N/mm²**
	Buckling	**143.23 N/mm²**
	Tension	**108.53 N/mm²**
	Unfactored DL defln	**2.041 mm**
	Unfactored LL defln	**1.7009 mm**
	Limiting deflection	**11.111 mm**
Unfactored end shears	**DL shear at LHE**	**6 kN**
	LL shear at LHE	**5 kN**
	DL shear at RHE	**6 kN**
	LL shear at RHE	**5 kN**

Location: Ex5 - Unequal angle long leg in compression

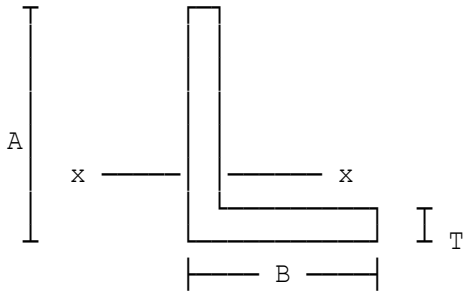

The long leg of the unequal angle is in compression.

Length of beam	L=4 m
200 x 150 x 18 mm Unequal Angle.	
Young's Modulus	E=205 kN/mm²
Dead load factor	gamd=1.4
Imposed load factor	gami=1.6
Dist. from left support to start	Lau(1)=0 m
Distance from left support to end	Lbu(1)=4 m
Dead load (unfactored)	Gku(1)=3 kN/m
Imposed load (unfactored)	Qku(1)=2.5 kN/m
Maximum span bending moment	16.4 kNm
Design shear force	Fv=16.4 kN
Length between restraint points	Lv=4 m

UNEQUAL ANGLE	**200 x 150 x 18 Grade S 275**	
	Long leg in compression	
DESIGN	**Max. shear force**	**16.4 kN**
SUMMARY	**Shear capacity**	**515.16 kN**
	Buckling resistance	**50.103 kNm**
	Moment factor (mLT)	**0.925**
	Resistance (Mb/mLT)	**54.166 kNm**
	Annex I.3 combined	
	stresses < py	**265 N/mm²**
	Compression	**142.13 N/mm²**
	Buckling	**147.77 N/mm²**
	Tension	**138.81 N/mm²**
	Unfactored DL defln	**2.041 mm**
	Unfactored LL defln	**1.7009 mm**
	Limiting deflection	**11.111 mm**
Unfactored end shears	**DL shear at LHE**	**6 kN**
	LL shear at LHE	**5 kN**
	DL shear at RHE	**6 kN**
	LL shear at RHE	**5 kN**

Location: Ex1 - Equal angle with unrestrained flange

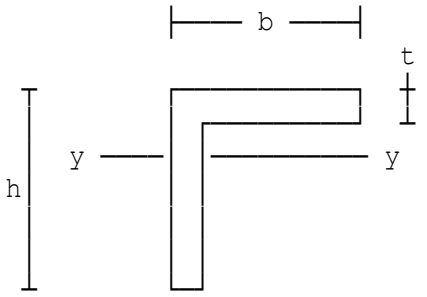

Equal angle heel is in compression.

y-y = major axis

Length of beam	L=4 m
200 x 200 x 20 mm Equal Angle (Advance UKA)	
Permanent UDL (including S.W)	wd=4 kN/m
Variable UDL	wi=3 kN/m
Length between restraint points	Lv=4 m

EQUAL ANGLE	**200 x 200 x 20 Grade S 275**
DESIGN SUMMARY	**Heel of angle in compression**
	Design shear force 19.8 kN
	Design shear resist. 550.79 kN
	Design moment 19.8 kNm
	Moment resistance 52.741 kNm
	Buckling resistance 50.582 kNm
	Unfactored deflection 1.6708 mm
	Limiting deflection 11.111 mm
	Interaction factor 0.53888 ≤ 1

Location: Ex2 - Unequal angle unrestrained, short leg in compression

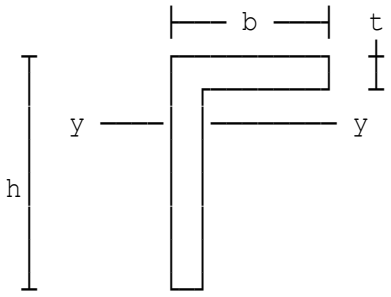

Unequal angle short leg
is in compression.

y-y = major axis

Length of beam	L=4 m
200 x 150 x 18 mm Unequal Angle (Advance UKA)	
Permanent UDL (including S.W)	wd=3 kN/m
Variable UDL	wi=2.5 kN/m
Length between restraint points	Lv=4 m

UNEQUAL ANGLE	**200 x 150 x 18 Grade S 275**	
DESIGN SUMMARY	**Short leg in compression**	
	Design shear force	**15.6 kN**
	Design shear resist.	**495.71 kN**
	Design moment	**15.6 kNm**
	Moment resistance	**46.138 kNm**
	Buckling resistance	**44.495 kNm**
	Unfactored deflection	**1.6673 mm**
	Limiting deflection	**11.111 mm**
	Interaction factor	**0.55161 ≤ 1**

Location: Ex3 - Unequal angle unrestrained, long leg in compression

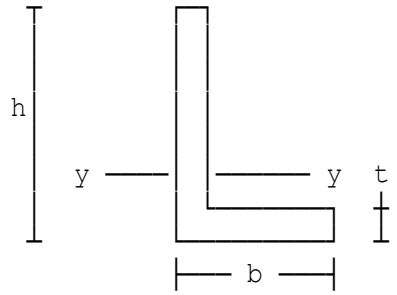

Unequal angle long leg
is in compression.

y-y = major axis

Length of beam	L=4 m
200 x 150 x 18 mm Unequal Angle (Advance UKA)	
Permanent UDL (including S.W)	wd=3 kN/m
Variable UDL	wi=2.5 kN/m
Length between restraint points	Lv=4 m

UNEQUAL ANGLE	**200 x 150 x 18 Grade S 275**	
DESIGN SUMMARY	**Long leg in compression**	
	Design shear force	**15.6 kN**
	Design shear resist.	**495.71 kN**
	Design moment	**15.6 kNm**
	Moment resistance	**46.138 kNm**
	Buckling resistance	**41.36 kNm**
	Unfactored deflection	**1.6673 mm**
	Limiting deflection	**11.111 mm**
	Interaction factor	**0.57214 ≤ 1**

Location: Ex4 - As Ex3 but restrained

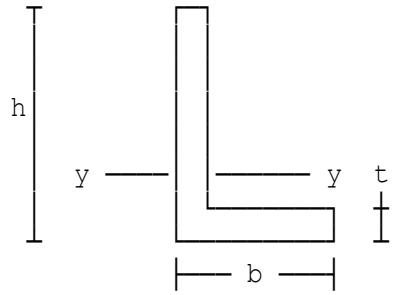

Unequal angle long leg
is in compression.

y-y = major axis

Length of beam L=4 m
200 x 150 x 18 mm Unequal Angle (Advance UKA)
Permanent UDL (including S.W) wd=3 kN/m
Variable UDL wi=2.5 kN/m

UNEQUAL ANGLE	**200 x 150 x 18 Grade S 275**
DESIGN SUMMARY	**Long leg in compression**
	Design shear force 15.6 kN
	Design shear resist. 495.71 kN
	Design moment 15.6 kNm
	Moment resistance 46.138 kNm
	Buckling resistance 46.138 kNm
	Unfactored deflection 1.6673 mm
	Limiting deflection 11.111 mm

Location: Ex5 - Unequal angle, user defined section properties

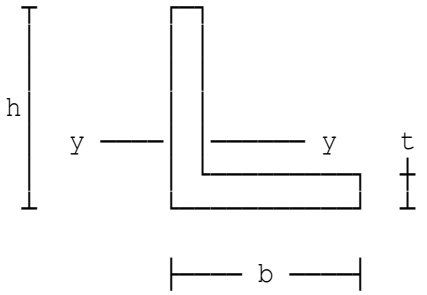

Horizontal leg (heel)
is in tension.

y-y = major axis

Length of beam	L=4 m
Permanent UDL (including S.W)	wd=3 kN/m
Variable UDL	wi=2.5 kN/m
Length between restraint points	Lv=4 m

UNEQUAL ANGLE	**200 x 150 x 18 Grade S 275**
DESIGN SUMMARY	**Long leg in compression**
	Design shear force 15.6 kN
	Design shear resist. 495.71 kN
	Design moment 15.6 kNm
	Moment resistance 46.541 kNm
	Buckling resistance 41.991 kNm
	Unfactored deflection 1.6592 mm
	Limiting deflection 11.111 mm
	Interaction factor 0.57307 ≤ 1

Location: Ex6 - Equal angle, user defined section properties

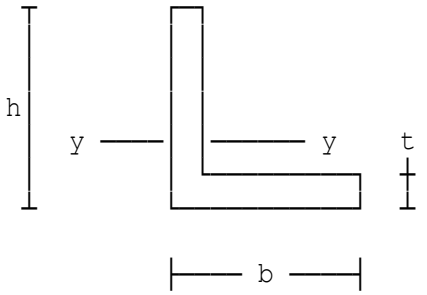

Horizontal leg (heel)
is in tension.

y-y = major axis

Length of beam	L=4 m
Permanent UDL (including S.W)	wd=3 kN/m
Variable UDL	wi=2.5 kN/m
Length between restraint points	Lv=4 m

EQUAL ANGLE	**200 x 200 x 20 Grade S 275**
DESIGN SUMMARY	**Heel of angle in tension**
	Design shear force 15.6 kN
	Design shear resist. 550.79 kN
	Design moment 15.6 kNm
	Moment resistance 53.51 kNm
	Buckling resistance 51.558 kNm
	Unfactored deflection 1.3778 mm
	Limiting deflection 11.111 mm
	Interaction factor 0.42391 ≤ 1

Location: Ex1 - Steelwork Design Guide twin end post (Ex6)

Stiffened plate girder

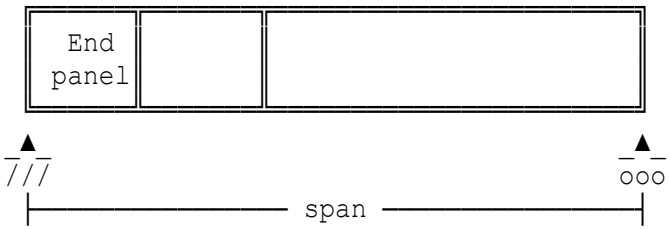

The girder is fully restrained along its length. The design method follows the procedure of section 4.4 & 4.5 of BS5950 Part 1 : 2000.

Loads and moments are factored.

Span of girder	span=25 m
Maximum factored bending moment	Mmax=14028 kNm
Young's Modulus	E=210000 kN/mm²
Depth of girder	D=2030 mm
Flange thickness to be tried	T=40 mm
Flange width to be tried	B=700 mm
Web thickness to be tried	t=13 mm
Stiffener corner snipe	snp=15 mm
End stiffener spac.for end panel	ab=2500 mm
Intermediate stiffener spacing	ai=3500 mm
Accompanying shear force	Fvm=0 kN
End shear force	Fve=1910 kN
Distance between end stiffeners	ae=400 mm
Assumed weld size	ss'=6 mm

ADOPT 2/250 mm x 20 mm plate stiffeners Grade S 275 connected by 4/6 mm fillet welds.

Panel length	ain1=2500 mm
Thickness of stiffener	ti1=13 mm
Shear force at stiffener	Vn1=1680 kN
Outstand to be used in design	bi=100 mm
Weld size selected	sw=6 mm
Panel length	ain2=3500 mm
Thickness of stiffener	ti2=13 mm
Shear force at stiffener	Vn2=1082 kN
External load on stiffener	Fx2=760 kN
Outstand to be used in design	bi=100 mm
Weld size selected	swl=6 mm

UDL applied between stiffeners w'=92 kN/m
Largest panel length a'=3000 mm
Selected fillet weld size s=8 mm

DESIGN SUMMARY

Span of plate girder L=25 m
All steel grade to be S 275 steel

End stiffeners:

Double stiffener required at end of girder.

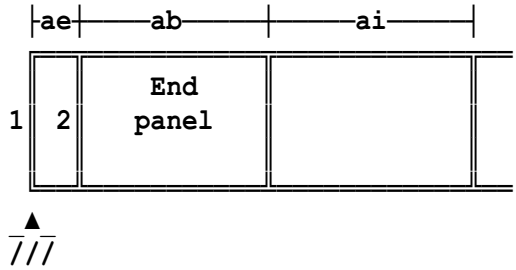

ae=400 mm
ab=2500 mm

Double stiffener: end post 1 2No/250 mm x 20 mm flats
end post 2 2No/200 mm x 16 mm flats
Spacing ai=3000 mm

Intermediate stiffeners:
Arrangement (1) 2No/100 mm x 13 mm flats
Arrangement (2) 2No/100 mm x 13 mm flats

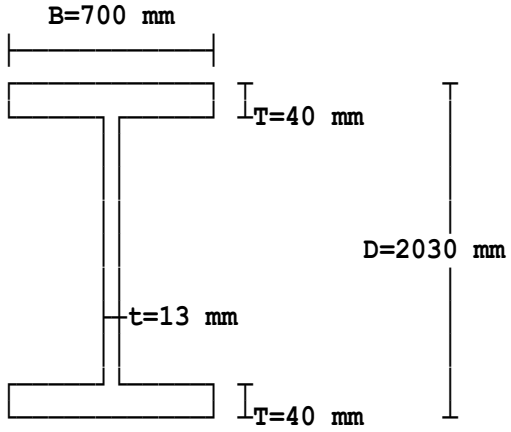

- **Fillet welds to be used for connecting stiffeners to girder web & flanges**
- **Weld sizes as detailed in calculations**
- **Weld design strength to be 35 N/mm²**
- **Electrode Grade 35**

Location: Ex2 - Same example with anchor panel

Stiffened plate girder

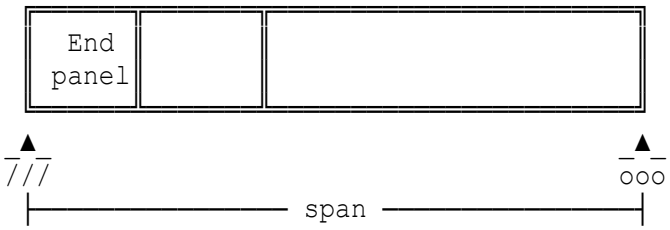

The girder is fully restrained along its length. The design method follows the procedure of section 4.4 & 4.5 of BS5950 Part 1 : 2000.

Loads and moments are factored.

Span of girder	span=25 m
Maximum factored bending moment	Mmax=14028 kNm
Young's Modulus	E=210000 kN/mm²
Depth of girder	D=2030 mm
Flange thickness to be tried	T=40 mm
Flange width to be tried	B=700 mm
Web thickness to be tried	t=13 mm
Stiffener corner snipe	snp=15 mm
End stiffener spac.for end panel	ab=2500 mm
Intermediate stiffener spacing	ai=3500 mm
Accompanying shear force	Fvm=0 kN
End shear force	Fve=1910 kN
Distance between end stiffeners	ae=400 mm
Assumed weld size	ss'=6 mm

ADOPT 2/250 mm x 20 mm plate stiffeners Grade S 275
connected by 4/6 mm fillet welds.

Panel length	ain1=3000 mm
Thickness of stiffener	ti1=13 mm
Shear force at stiffener	Vn1=1680 kN
Outstand to be used in design	bi=100 mm
Weld size selected	sw=6 mm
UDL applied between stiffeners	w'=92 kN/m
Largest panel length	a'=3000 mm
Selected fillet weld size	s=8 mm

DESIGN SUMMARY

Span of plate girder **L=25 m**
All steel grade to be **S 275 steel**

End stiffeners:

Anchor panel at each end of girder.

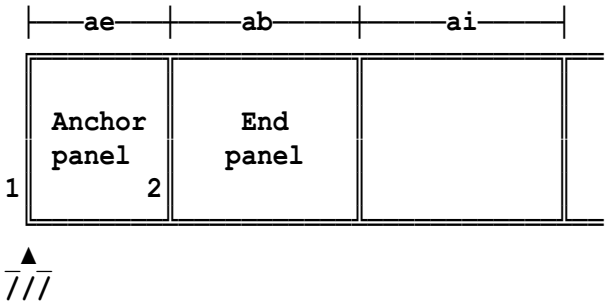

ae=400 mm
ab=2500 mm

Anchor panel: stiffener 1 **2No/250 mm x 20 mm flats**
stiffener 2 **2No/200 mm x 16 mm flats**
Spacing ai=3000 mm

Intermediate stiffeners:
Arrangement (1) **2No/100 mm x 13 mm flats**

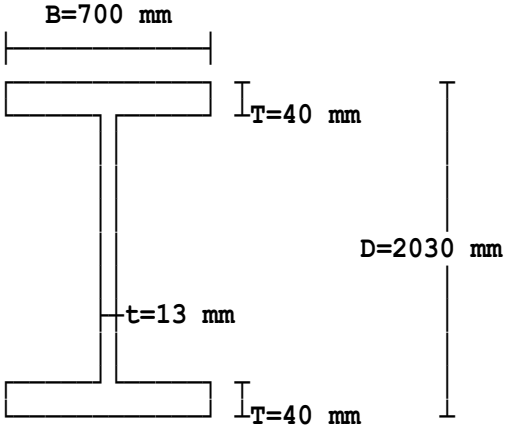

- **Fillet welds to be used for connecting stiffeners to girder web & flanges**
- **Weld sizes as detailed in calculations**
- **Weld design strength to be 35 N/mm²**
- **Electrode Grade 35**

Location: Ex3 - Same example with single stiffener end post

Stiffened plate girder

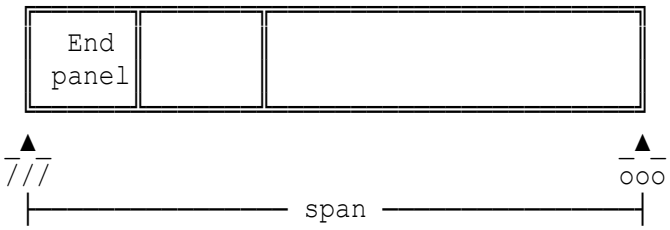

The girder is fully restrained along its length. The design method follows the procedure of section 4.4 & 4.5 of BS5950 Part 1 : 2000.

Loads and moments are factored.

Span of girder	span=25 m
Maximum factored bending moment	Mmax=14028 kNm
Young's Modulus	E=210000 kN/mm²
Depth of girder	D=2030 mm
Flange thickness to be tried	T=40 mm
Flange width to be tried	B=700 mm
Web thickness to be tried	t=13 mm
Stiffener corner snipe	snp=15 mm
End stiffener spac.for end panel	ab=2500 mm
Intermediate stiffener spacing	ai=3500 mm
Accompanying shear force	Fvm=0 kN
End shear force	Fve=1910 kN
Assumed weld size	ss'=6 mm

ADOPT 2/208 mm x 16 mm plate stiffeners Grade S 275 connected by 4/6 mm fillet welds.

Panel length	ain1=3000 mm
Thickness of stiffener	ti1=13 mm
Shear force at stiffener	Vn1=1680 kN
Outstand to be used in design	bi=100 mm
Weld size selected	sw=6 mm
UDL applied between stiffeners	w'=92 kN/m
Largest panel length	a'=3000 mm
Selected fillet weld size	s=8 mm

DESIGN SUMMARY

Span of plate girder **L=25 m**
All steel grade to be **S 275 steel**

End stiffener:

Single stiffener required at end of girder.

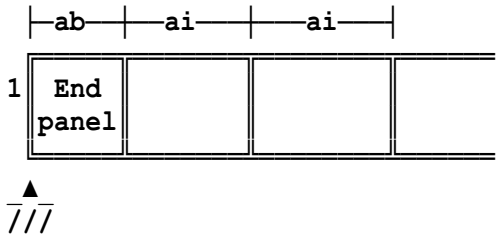

Single stiffener: end post 1 **2No/208 mm x 16 mm flats**
Spacing ai=3000 mm

Intermediate stiffeners:
Arrangement (1) **2No/100 mm x 13 mm flats**

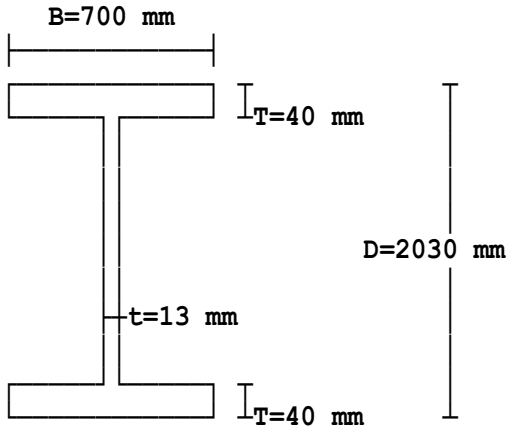

- **Fillet welds to be used for connecting stiffeners to girder web & flanges**
- **Weld sizes as detailed in calculations**
- **Weld design strength to be 35 N/mm²**
- **Electrode Grade 35**

Location: Ex1 - Rigid end posts and intermediate stiffeners

Stiffened plate girder - with rigid end post

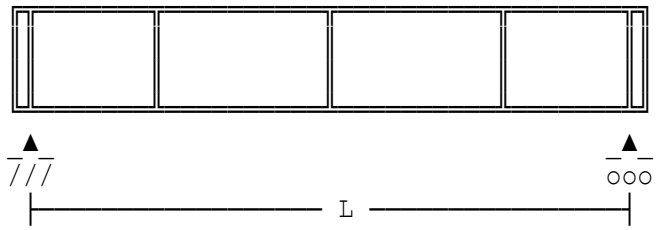

The girder is fully restrained along its length. The design calculations are in accordance with BS EN 1993-1-1 and BS EN 1993-1-5. Loads and moments are factored.

Assume rigid end posts (two double-sided stiffeners at supports).

Span of girder	L=25 m
Maximum design bending moment	MyEd=14028 kNm
Design bearing reaction	NbEd=3500 kN
Depth of girder	h=2030 mm
Web thickness	tw=18 mm
Stiffener corner snipe	snp=15 mm

Dimensions of web and flanges

Stiffener spacing of first panel	ae=3000 mm
Intermediate stiffener spacing	ai=3000 mm
Accompanying design shear	VzEd'=0 kN

Bearing stiffeners double sided - BS EN 1993-1-5 section 9

Bearing stiffeners are assumed to be symmetric about the beam web and will be designed as a strut to BS EN 1993-1-5 Clause 9.4(2), resisting the bearing reaction together with any eccentricities.

compute kt from Annex A	kt=5.34+4*(hw/a)^2=7.03
Design shear resistance	VbRd=chiw*fy*hw*tw/(SQR(3)*gamM1 *1000)=3955.2 kN
Design shear at the support	VEd(0)=NbRd=3500 kN

As VEd(0) ≤ VbRd (3500 kN ≤ 3955.2 kN), the design shear at the support is less than the design shear resistance. Hence OK.

Action as a bearing stiffener

Two double-sided stiffeners at support

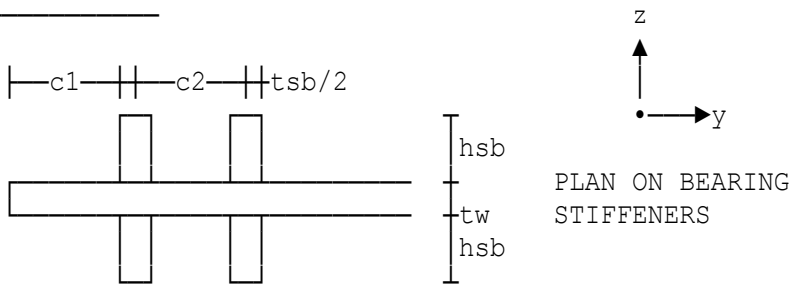

NOTE: Stiffeners to be equally spaced about the centreline of bearing.

Depth of bearing stiffener hsb=250 mm
Thickness of bearing stiffener tsb=25 mm
Distance c1=0 mm
Distance between stiffener CL's c2=300 mm
Eccentricity in each direction ecc=10 mm
Worst stress in web plate:
swp=NbEd*1E3/A+MzEdb*1E6*(15*ew*tw+tsb/2+c2/2)/(Izz)
=115.88 N/mm²
Worst stress in stiffener:
compute comp1=NbEd*1E3/A=98.796 N/mm²
compute comp2=MzEdb*1E6*(c2/2+tsb/2)/(Izz)
=6.6595 N/mm²
compute comp3=MyEdb*1E6*(hsb+tw/2)/(Iyy)
=15.653 N/mm²
Stiffener stress sst=comp1+comp2+comp3=121.11 N/mm²

Limiting outstand to prevent torsional buckling - Clause 9.2.1(8)

Ratio (hsb/tsb) p=hsb/tsb=10
Limit to ratio p=(hsb/tsb) is 13ε=12.242.
Ratio (hsb/tsb)=10 is not greater than limit 13ε=12.242.
Stiffener complies with Clause 9.2.1(8).

Action as a rigid end post

A rigid end post comprise of two double-sided transverse stiffeners that form the flanges of a short beam of length hw. The effective section below will be taken to exclude the outer parts of web plate.

Two double-sided stiffeners at support

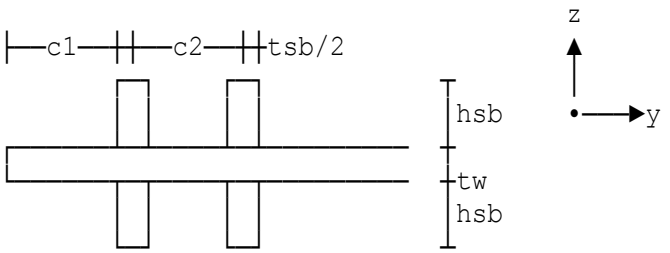

Minimum area Amin=4*hw*tw^2/c2=8424 mm²
Actual area provided Asp=2*hsb*tsb=12500 mm²
As Asp ≥ Amin (12500 mm² ≥ 8424 mm²), stiffener area is adequate.
In-plane moment MzEdm=NH*hw/(8*1E3)=87.315 kNm
End post 2nd moment of area Izze=2*(Asp*(c2/2)^2)=562.5E6 mm⁴
Worst stiffener stress from membrane action will be calculated below.
Stress due to membrane action sstm=MzEdm*1E6/(Izze/(c2/2+tsb/2))
=25.224 N/mm²

Cross-section resistance check

The maximum stresses from membrane action and bearing reaction will be added together here for simplicity, even though they occur at different heights on the stiffener.
Total stress sstT=sst+sstm=146.33 N/mm²
As sstT ≤ fy (146.33 N/mm² ≤ 265 mm²), stiffener is OK.

Buckling check under combined bending and axial load

The stiffener will be checked for buckling under combined bending and axial load in accordance with BS EN 1993-1-1, Clause 6.3.3.

Critical load	Ncry=PI^2*E*Iyy/(Lcry^2*1000) =315666 kN
Slenderness of the stiffener	lamb=(A*fy/(Ncry*1E3))^0.5=0.17245
Design axial load resistance	NplRd=A*fy/(gamM1*1000)=9388.1 kN
Design moment resistance yy axis	MyRd=Wely*fy/(gamM1*1E6)=592.55 kNm
Design moment resistance zz axis	MzRdb=Welzb*fy/(gamM1*1E6) =1392.8 kNm (bearing)
Design moment resistance zz axis	MzRdm=Welzm*fy/(gamM1*1E6) =917.31 kNm (membrane)

Interaction equation:

Uni=NEd/(chiy*NplRd)+ratio*(MyEd/MyRd)+(MzEdb/MzRdb+MzEdm/MzRdm) =0.55286

As Uni ≤ 1.0 (0.55286 ≤ 1.0), the interaction equation is OK.

Connection of stiffeners to girder web

Net stiffener length	Lsn=hw-2*snp=1920 mm
Assumed weld size	ss'=6 mm
Effective length of weld	Lw=8*(Lsn-2*ss')=15264 mm
Design load on weld	FwEd=NbEd*10^3/Lw=229.3 N/mm
Design weld resistance	FwRd=0.7*ss'*fvwd=935.71 N/mm

Shear buckling resistance - EN 1993-1-1, Clause 6.2.6(6)

As hw/tw > 72*ew (108.33 > 67.802), the web shear buckling resistance needs to be checked (EN 1993-1-5 Clause 5.2 and 5.3).

Buckling coefficient (Annex A)	kt=5.34+4*(hw/a)^2=7.03
Modified slenderness λ	lamw=hw/(37.4*tw*ew*SQR(kt))=1.1601
Shear resistance of web	VplRd=5370.2 kN

Reduced design shear resistance at support (web contribution only will be considered):

VbwRd=chiw*fyw*hw*tw/(3^0.5*gamM1*1000)=3955.2 kN

Design shear at support	VEd(0)=NbEd=3500 kN

As VEd(0) ≤ VbwRd (3500 kN ≤ 3955.2 kN), the shear force is less than the shear resistance. Hence section OK.

compute	comp=eta1+(1-MfRd/MplRd)*(2*eta3 -1)^2=0.89626

As comp ≤ 1 (0.89626 ≤ 1), interaction equation is satisfied.

Intermediate transverse web stiffeners - Arrangement (1)

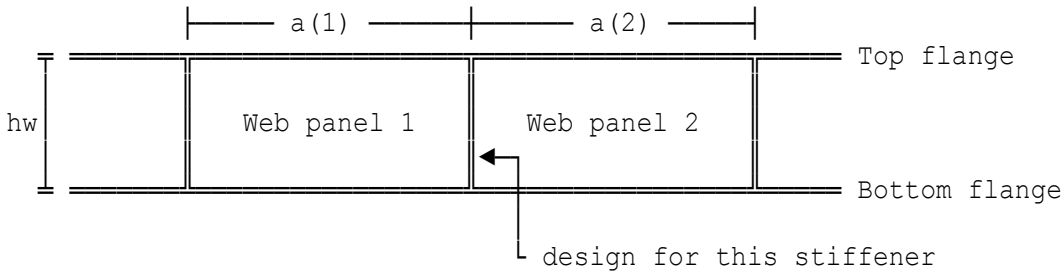

Elevation on web without longitudinal stiffening

Panel length 1 a(1)=3000 mm
Length of stiffener ls=1950 mm

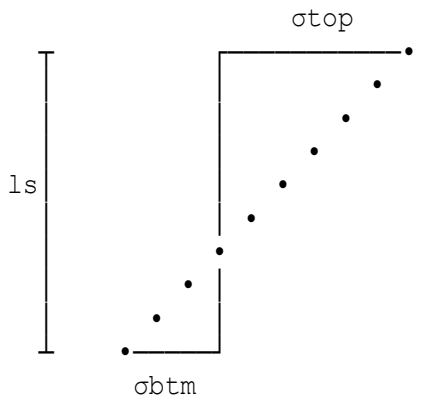

Longitudinal stresses in web with transverse stiffeners

ls=1950 mm

Compression stresses are positive

Stress at top of web plate (σtop) stop=251.76 N/mm²
Stress at btm of web plate (σbtm) sbtm=-251.76 N/mm²

Design parameters

Stiffener outstand hs1=100 mm
Stiffener thickness ts1=15 mm

Limiting outstand to prevent torsional buckling - Clause 9.2.1(8)

Yield strength to be adopted fy=265 N/mm²
Ratio (hs1/ts1) p=hs1/ts1=6.6667
Limit to ratio p=(hs1/ts1) is 13ε=12.017.
Ratio (hs1/ts1)=6.6667 is not greater than limit 13ε=12.017.
Stiffener complies with Clause 9.2.1(8).

Design shear resistance (double sided transverse stiffener)

The effective cross section of the intermediate double-sided transverse stiffener is as shown below:

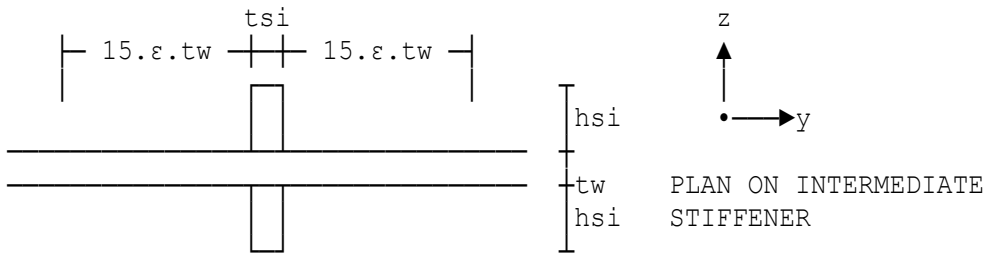

2nd moment of area yy axis:
Iyy=tsi*(2*hsi+tw)^3/12+(30*ew*tw)*tw^3/12
=13.197E6 mm⁴
Design shear resistance VbRd=chi*Ae*fyw/(gamM1*1000)=2761.5 kN

Axial force in the stiffener due to shear - BS EN 1993-1-5

Shear buckling coefficient for web panel kt is derived from Clause 5.2.
Buckling coefficient (Annex A) kt=5.34+4*(hw/a)^2=7.03
Modified slenderness λw lamw=0.76*(fy/tcr)^0.5=1.1603
Max design shear force in panel VEd1=1700 kN
Externally applied design load Pext1=1200 kN

Option 1:
Longitudinal compressive stress σxEd=0 for symmetrical sections.
Vertical force generated in stiffener arising from the shear induced tension field (see older version of NA to BS EN 1993-1-5:2006):
PEd1'=VEd1-hw*tw*0.8*tcr/1000=-1492.5 kN

Option 2:
Vertical force generated in the stiffener as per BS EN 1993-1-5 (see NOTE, Clause 9.3.3(3)):
PEd1=VEd1-fyw*hw*tw/(SQR(3)*gamM1*lamw^2*1000)=-2288.8 kN
Design axial load in stiffener PEd=PEd1+Pext1=1200 kN
As PEd ≤ VbRd (1200 kN ≤ 2761.5 kN), the design shear force does not exceed the shear resistance. Hence OK.

Connection to the web

Design shear load on weld FwEd=tw^2/(5*hs1)+PEd/(2*(hw-2*snp))
=0.9605 kN/mm
Weld size provided sw1=6 mm

Stiffness check - Clause 9.3.3(3)

2nd moment of area (effe.section) Ipro=13.197E6 mm⁴
2nd moment of area required Ireq=0.75*hw*tw^3=8.5293E6 mm⁴
As Ireq ≤ Ipro (8.5293E6 mm⁴ ≤ 13.197E6 mm⁴), the stiffener is OK.

Web check between stiffeners

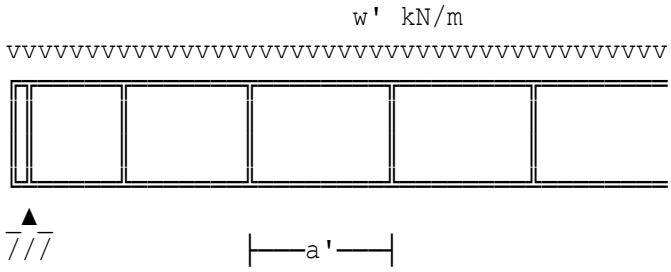

Girder assumed to have rigid end posts.

UDL applied between stiffeners w'=92 kN/m (factored load)
Largest panel length a'=3000 mm
Compressive stress of web sed=w'/tw=5.1111 N/mm²
Compressive strength of web fed=(2.75+2/(a'/hw)^2)*E/(C/tw)^2
=65.94 N/mm²
Since sed ≤ fed (5.1111 N/mm² ≤ 65.94 N/mm²), the web is OK.
Selected fillet weld size s=12 mm

Intermediate transverse web stiffeners - Arrangement (2)

Panel length 1 a(3)=2800 mm
Stiffener outstand hs2=200 mm
Stiffener thickness ts2=20 mm

Limiting outstand to prevent torsional buckling - Clause 9.2.1(8)

Yield strength to be adopted fy=265 N/mm²
Ratio (hs2/ts2) p=hs2/ts2=10
Limit to ratio p=(hs2/ts2) is 13ε=12.242.
Ratio (hs2/ts2)=10 is not greater than limit 13ε=12.242.
Stiffener complies with Clause 9.2.1(8).

Design shear resistance (double sided transverse stiffener)

The effective cross section of the intermediate double-sided transverse stiffener is as shown below:

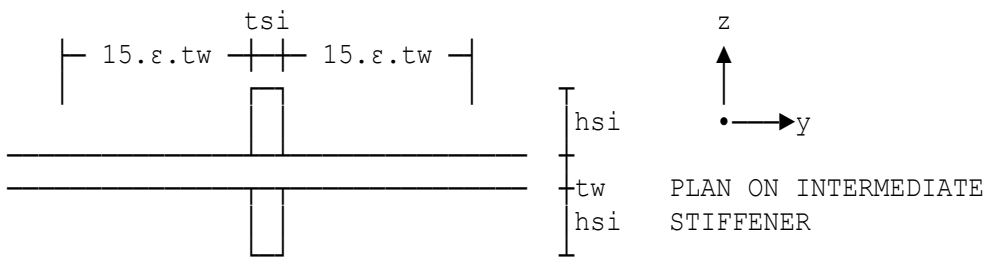

2nd moment of area yy axis:
Iyy=tsi*(2*hsi+tw)^3/12+(30*ew*tw)*tw^3/12
=121.97E6 mm⁴
Design shear resistance VbRd=chi*Ae*fyw/(gamM1*1000)=4641 kN

Axial force in the stiffener due to shear

Max design shear force in panel VEd2=3200 kN
Externally applied design load Pext2=1200 kN
Design axial load in stiffener PEd'=PEd2+Pext2=1200 kN
As PEd' ≤ VbRd (1200 kN ≤ 4641 kN), the design shear force does not exceed the shear resistance. Hence OK.

Connection to the web

Design shear load on weld FwEd=tw^2/(5*hs2)+PEd'/(2*(hw-2 *snp))=0.6365 kN/mm
Weld size provided sw2=6 mm

Stiffness check - Clause 9.3.3(3)

2nd moment of area (eff.section) Ipro=121.97E6 mm⁴
2nd moment of area required Ireq=0.75*hw*tw^3=8.5293E6 mm⁴
As Ireq ≤ Ipro (8.5293E6 mm⁴ ≤ 121.97E6 mm⁴), the stiffener is OK.

DESIGN SUMMARY

Span of plate girder 25 m
Design moment 14028 kNm
All steel to be Grade S 275

End stiffeners:

Posts 1 & 2 are double-sided stiffeners at end of girder.

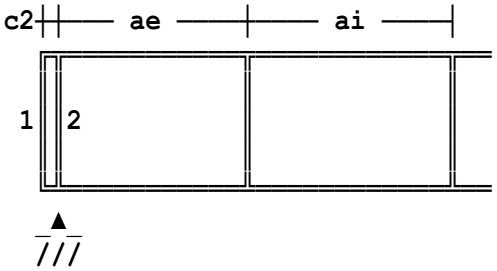

c2=300 mm
ae=3000 mm
ai=3000 mm

Double-sided stiffeners: post 1 2No/250 mm x 25 mm flats
post 2 2No/250 mm x 25 mm flats

Intermediate stiffeners:
Arrangement (1) Double-sided stiffeners
2No/100 mm x 15 mm flats
spaced at 3000 mm centres

Intermediate stiffeners:
Arrangement (2) Double-sided stiffeners
2No/200 mm x 20 mm flats
spaced at 2800 mm centres

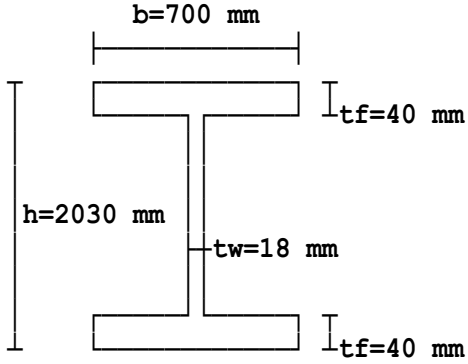

- **Fillet welds to be used for connecting stiffeners to girder web & flanges**
- **Weld sizes as detailed in calculations**
- **Weld design strength to be 222 N/mm²**

Assume rigid end posts to BS EN 1993-1-5, Figure 5.1 & Table 5.1.

Location: Ex2 - Rigid end posts only

Stiffened plate girder - with rigid end post

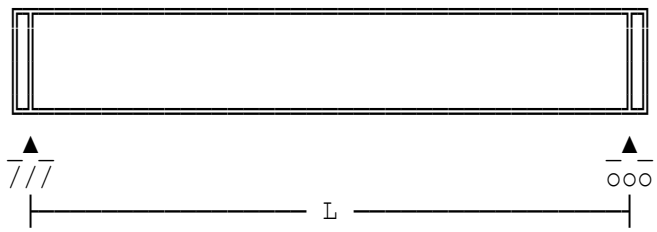

The girder is fully restrained along its length. The design calculations are in accordance with BS EN 1993-1-1 and BS EN 1993-1-5. Loads and moments are factored.

Assume rigid end posts (two double-sided stiffeners at supports).

Span of girder	L=12 m
Maximum design bending moment	MyEd=1800 kNm
Design bearing reaction	NbEd=1845 kN
Depth of girder	h=1200 mm
Web thickness	tw=12.5 mm
Stiffener corner snipe	snp=15 mm

Dimensions of web and flanges

Accompanying design shear VzEd'=0 kN

Bearing stiffeners double sided - BS EN 1993-1-5 section 9

Bearing stiffeners are assumed to be symmetric about the beam web and will be designed as a strut to BS EN 1993-1-5 Clause 9.4(2), resisting the bearing reaction together with any eccentricities.

Shear buckling coefficient for web panel kt from BS EN 1993-1-5.

compute kt from Annex A	kt=5.34
Design shear resistance	VbRd=chiw*fy*hw*tw/(SQR(3)*gamM1 *1000)=1958.7 kN
Design shear at the support	VEd(0)=NbRd=1845 kN

As VEd(0) ≤ VbRd (1845 kN ≤ 1958.7 kN), the design shear at the support is less than the design shear resistance. Hence OK.

Action as a bearing stiffener

Two double-sided stiffeners at support

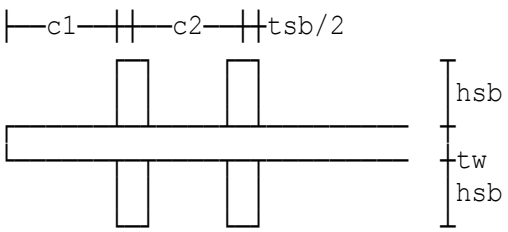

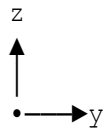

PLAN ON BEARING STIFFENERS

NOTE: Stiffeners to be equally spaced about the centreline of bearing.

Depth of bearing stiffener hsb=150 mm

Thickness of bearing stiffener tsb=20 mm
Distance c1=325 mm
Distance between stiffener CL's c2=300 mm
Eccentricity in each direction ecc=10 mm
Worst stress in web plate:
swp=NbEd*1E3/A+MzEdb*1E6*(15*ew*tw+tsb/2+c2/2)/(Izz)
=104.11 N/mm²
Worst stress in stiffener:
compute comp1=NbEd*1E3/A=93.117 N/mm²
compute comp2=MzEdb*1E6*(c2/2+tsb/2)/(Izz)
=5.6288 N/mm²
compute comp3=MyEdb*1E6*(hsb+tw/2)/(Iyy)
=28.339 N/mm²
Stiffener stress sst=comp1+comp2+comp3=127.08 N/mm²

Limiting outstand to prevent torsional buckling - Clause 9.2.1(8)

Ratio (hsb/tsb) p=hsb/tsb=7.5
Limit to ratio p=(hsb/tsb) is 13ε=10.729.
Ratio (hsb/tsb)=7.5 is not greater than limit 13ε=10.729.
Stiffener complies with Clause 9.2.1(8).

Action as a rigid end post

A rigid end post comprise of two double-sided transverse stiffeners that form the flanges of a short beam of length hw. The effective section below will be taken to exclude the outer parts of web plate.

Two double-sided stiffeners at support

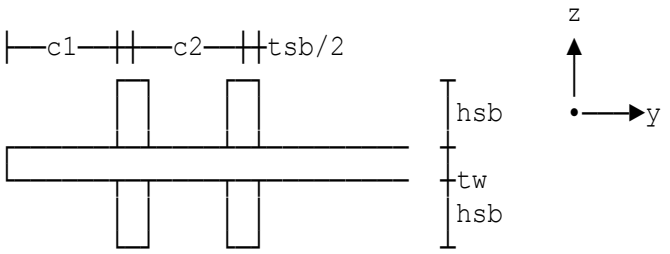

Minimum area Amin=4*hw*tw^2/c2=2416.7 mm²
Actual area provided Asp=2*hsb*tsb=6000 mm²
As Asp ≥ Amin (6000 mm² ≥ 2416.7 mm²), stiffener area is adequate.
In-plane moment MzEdm=NH*hw/(8*1E3)=140.88 kNm
End post 2nd moment of area Izze=2*(Asp*(c2/2)^2)=270E6 mm⁴
Worst stiffener stress from membrane action will be calculated below.
Stress due to membrane action sstm=MzEdm*1E6/(Izze/(c2/2+tsb/2))
=83.484 N/mm²

Cross-section resistance check

The maximum stresses from membrane action and bearing reaction will be added together here for simplicity, even though they occur at different heights on the stiffener.
Total stress sstT=sst+sstm=210.57 N/mm²
As sstT ≤ fy (210.57 N/mm² ≤ 345 mm²), stiffener is OK.

Buckling check under combined bending and axial load

The stiffener will be checked for buckling under combined bending and axial load in accordance with BS EN 1993-1-1, Clause 6.3.3.

```
Critical load                     Ncry=PI^2*E*Iyy/(Lcry^2*1000)
                                      =156687 kN
Slenderness of the stiffener      lamb=(A*fy/(Ncry*1E3))^0.5=0.20887
Design axial load resistance      NplRd=A*fy/(gamM1*1000)=6835.8 kN
Design moment resistance yy axis  MyRd=Wely*fy/(gamM1*1E6)=224.61 kNm
Design moment resistance zz axis  MzRdb=Welzb*fy/(gamM1*1E6)
                                       =1130.8 kNm (bearing)
Design moment resistance zz axis  MzRdm=Welzm*fy/(gamM1*1E6)
                                       =582.19 kNm (membrane)
Interaction equation:
   Uni=NEd/(chiy*NplRd)+ratio*(MyEd/MyRd)+(MzEdb/MzRdb+MzEdm/MzRdm)
      =0.61255
```

As Uni ≤ 1.0 (0.61255 ≤ 1.0), the interaction equation is OK.

Connection of stiffeners to girder web

```
Net stiffener length              Lsn=hw-2*snp=1130 mm
Assumed weld size                 ss'=6 mm
Effective length of weld          Lw=8*(Lsn-2*ss')=8944 mm
Design load on weld               FwEd=NbEd*10^3/Lw=206.28 N/mm
Design weld resistance            FwRd=0.7*ss'*fvwd=1013.1 N/mm
```

Shear buckling resistance - EN 1993-1-1, Clause 6.2.6(6)

As hw/tw > 72*ew (92.8 > 58.58), the web shear buckling resistance needs to be checked (EN 1993-1-5 Clause 5.2 and 5.3).

```
Modified slenderness λ            lamw=hw/(86.4*tw*ew)=1.3201
Shear resistance of web           VplRd=2888.2 kN
Reduced design shear resistance at support (web contribution only
will be considered):
                       VbwRd=chiw*fyw*hw*tw/(3^0.5*gamM1*1000)=2015.5 kN

Design shear at support           VEd(0)=NbEd=1845 kN
As VEd(0) ≤ VbwRd ( 1845 kN ≤ 2015.5 kN ), the shear force is less
than the shear resistance.  Hence section OK.
compute                           comp=eta1+(1-MfRd/MplRd)*(2*eta3
                                       -1)^2=0.58198
As comp ≤ 1 ( 0.58198 ≤ 1 ), interaction equation is satisfied.
Selected fillet weld size         s=8 mm
```

DESIGN SUMMARY

Span of plate girder	**12 m**
Design moment	**1800 kNm**
All steel to be	**Grade S 355**

End stiffeners:

Posts 1 & 2 are double-sided stiffeners at end of girder.

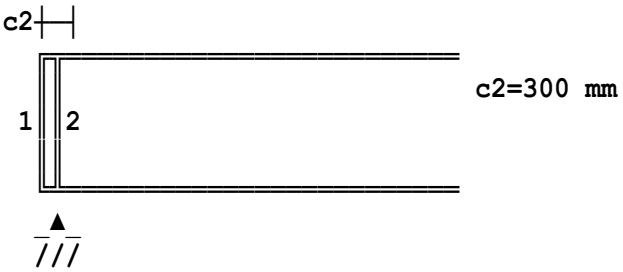

Double-sided stiffeners: post 1 2No/150 mm x 20 mm flats
post 2 2No/150 mm x 20 mm flats

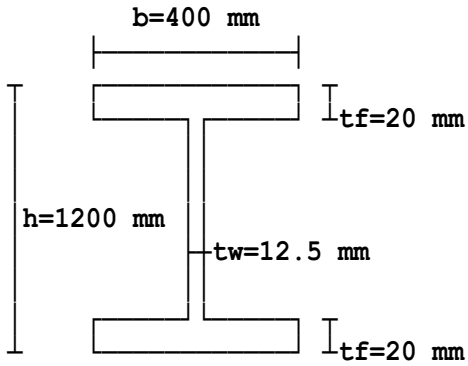

- **Fillet welds to be used for connecting stiffeners to girder web & flanges**
- **Weld sizes as detailed in calculations**
- **Weld design strength to be 241 N/mm²**

Assume rigid end posts to BS EN 1993-1-5, Figure 5.1 & Table 5.1.

Location: Ex3 - Intermediate stiffeners and non-rigid end posts

Stiffened plate girder

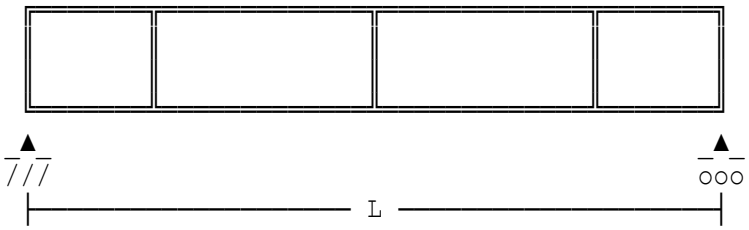

The girder is fully restrained along its length. The design calculations are in accordance with BS EN 1993-1-1 and BS EN 1993-1-5. Loads and moments are factored.

Assume non-rigid end posts to BS EN 1993-1-5, Figure 5.1 & Table 5.1.

Span of girder	L=12 m
Maximum design bending moment	MyEd=1800 kNm
Design bearing reaction	NbEd=1500 kN
Depth of girder	h=1200 mm
Web thickness	tw=12.5 mm
Stiffener corner snipe	snp=15 mm

Dimensions of web and flanges

Stiffener spacing of first panel	ae=1550 mm
Intermediate stiffener spacing	ai=3000 mm
Accompanying design shear	VzEd'=0 kN

Shear buckling resistance - EN 1993-1-1, Clause 6.2.6(6)

As hw/tw > 72*ew (92.8 > 66.558), the web shear buckling resistance needs to be checked (EN 1993-1-5 Clause 5.2 and 5.3).

Buckling coefficient (Annex A)	kt=5.34+4*(hw/a)^2=7.5803
Modified slenderness λ	lamw=hw/(37.4*tw*ew*SQR(kt))=0.97491
Shear resistance of web	VplRd=2218.5 kN

Reduced design shear resistance at support (web contribution only will be considered):

VbwRd=chiw*fyw*hw*tw/(3^0.5*gamM1*1000)=1960 kN

Design shear at support VEd(0)=NbEd=1500 kN

As VEd(0) ≤ VbwRd (1500 kN ≤ 1960 kN), the shear force is less than the shear resistance. Hence section OK.

compute comp=eta1+(1-MfRd/MplRd)*(2*eta3 -1)^2=0.62629

As comp ≤ 1 (0.62629 ≤ 1), interaction equation is satisfied.

Intermediate transverse web stiffeners - Arrangement (1)

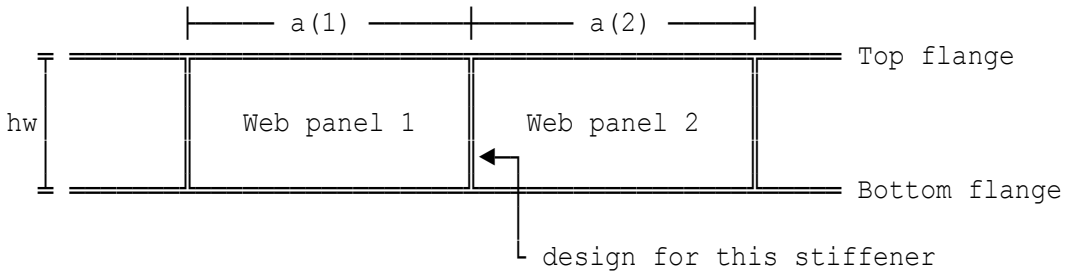

Elevation on web without longitudinal stiffening

Panel length 1 a(1)=3000 mm
Length of stiffener ls=1160 mm

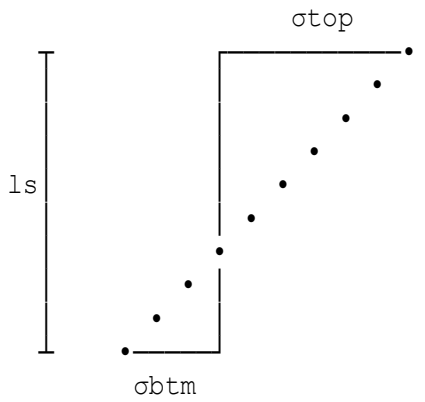

Longitudinal stresses in web with transverse stiffeners

ls=1160 mm

Compression stresses are positive

Stress at top of web plate (σtop) stop=190.68 N/mm²
Stress at btm of web plate (σbtm) sbtm=-190.68 N/mm²

Design parameters

Stiffener outstand hs1=100 mm
Stiffener thickness ts1=15 mm

Limiting outstand to prevent torsional buckling - Clause 9.2.1(8)

Yield strength to be adopted fy=275 N/mm²
Ratio (hs1/ts1) p=hs1/ts1=6.6667
Limit to ratio p=(hs1/ts1) is 13ε=10.577.
Ratio (hs1/ts1)=6.6667 is not greater than limit 13ε=10.577.
Stiffener complies with Clause 9.2.1(8).

Design shear resistance (double sided transverse stiffener)

The effective cross section of the intermediate double-sided transverse stiffener is as shown below:

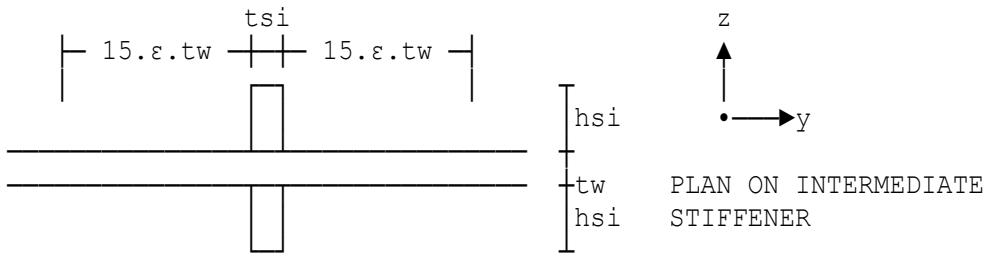

2nd moment of area yy axis:
Iyy=tsi*(2*hsi+tw)^3/12+(30*ew*tw)*tw^3/12
=12.051E6 mm⁴
Design shear resistance VbRd=chi*Ae*fyw/(gamM1*1000)=2015.2 kN

Axial force in the stiffener due to shear - BS EN 1993-1-5

Shear buckling coefficient for web panel kt is derived from Clause 5.2.
Buckling coefficient (Annex A) kt=5.34+4*(hw/a)^2=5.938
Modified slenderness λw lamw=0.76*(fy/tcr)^0.5=1.1017
Max design shear force in panel VEd1=600 kN
Externally applied design load Pext1=1000 kN

Option 1:
Longitudinal compressive stress σxEd=0 for symmetrical sections.
Vertical force generated in stiffener arising from the shear induced tension field (see older version of NA to BS EN 1993-1-5:2006):
PEd1'=VEd1-hw*tw*0.8*tcr/1000=-918.11 kN

Option 2:
Vertical force generated in the stiffener as per BS EN 1993-1-5 (see NOTE, Clause 9.3.3(3)):
PEd1=VEd1-fyw*hw*tw/(SQR(3)*gamM1*lamw^2*1000)=-1296.8 kN
Design axial load in stiffener PEd=PEd1+Pext1=1000 kN
As PEd ≤ VbRd (1000 kN ≤ 2015.2 kN), the design shear force does not exceed the shear resistance. Hence OK.

Connection to the web

Design shear load on weld FwEd=tw^2/(5*hs1)+PEd/(2*(hw-2*snp))
=0.75498 kN/mm
Weld size provided sw1=6 mm

Stiffness check - Clause 9.3.3(3)

2nd moment of area (effe.section) Ipro=12.051E6 mm⁴
2nd moment of area required Ireq=0.75*hw*tw^3=1.6992E6 mm⁴
As Ireq ≤ Ipro (1.6992E6 mm⁴ ≤ 12.051E6 mm⁴), the stiffener is OK.

Web check between stiffeners

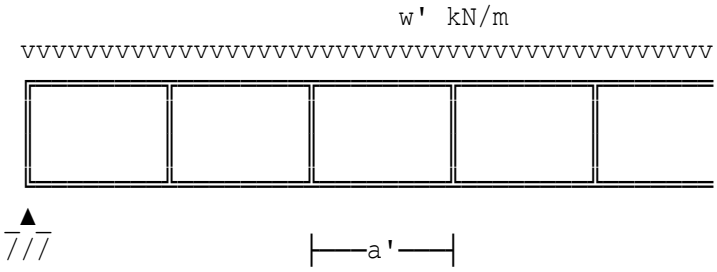

Girder assumed to have non-rigid end posts.

UDL applied between stiffeners w'=100 kN/m (factored load)
Largest panel length a'=3000 mm
Compressive stress of web sed=w'/tw=8 N/mm²
Compressive strength of web fed=(2.75+2/(a'/hw)^2)*E/(C/tw)^2
=77.525 N/mm²
Since sed ≤ fed (8 N/mm² ≤ 77.525 N/mm²), the web is OK.
Selected fillet weld size s=6 mm

Bearing stiffener (double sided non-rigid end post)

It is assumed that the support reaction acts at the centroid of the effective stiffener section, such that there is no bending moment induced. Bearing stiffener consists a single double-sided stiffener. The stiffener effective cross section is as shown below:

One double-sided stiffener at support

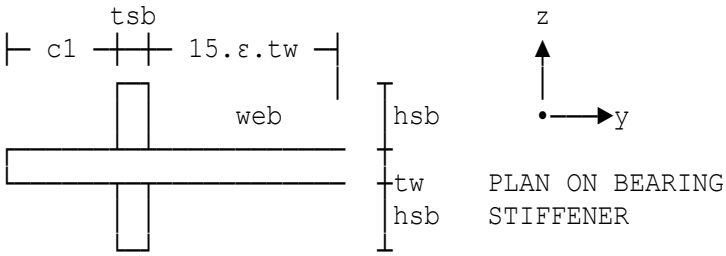

Depth of bearing stiffener hsb=150 mm
Thickness of bearing stiffener tsb=20 mm
Distance c1=100 mm
Design buckling resistance NbRd=chi*Ast*fysb/(gamM1*1000)
=2561.6 kN
As NbEd ≤ NbRd (1500 kN ≤ 2561.6 kN), the design bearing reaction at the support is less than the design buckling resistance. Hence satisfactory.

Limiting outstand to prevent torsional buckling - Clause 9.2.1(8)

Ratio (hsb/tsb) p=hsb/tsb=7.5
Limit to ratio p=(hsb/tsb) is 13ε=12.242.
Ratio (hsb/tsb)=7.5 is not greater than limit 13ε=12.242.
Stiffener complies with Clause 9.2.1(8).

DESIGN SUMMARY

Span of plate girder **12 m**
Design moment **1800 kNm**
All steel to be **Grade S 275**

End stiffener :

Posts 1 is a double-sided stiffener at end of girder.

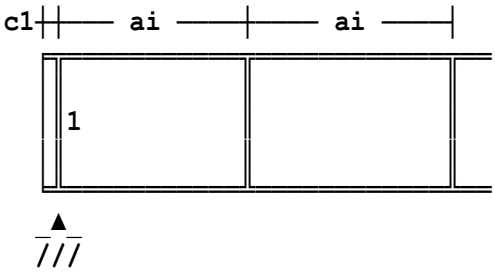

c1=100 mm

Double-sided stiffeners: post 1 **2No/150 mm x 20 mm flats**

Intermediate stiffeners

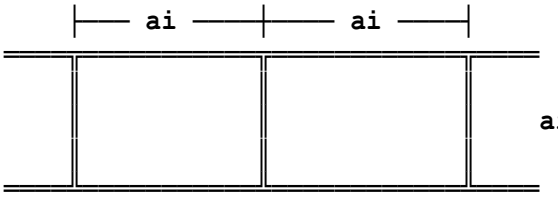

ai=3000 mm

Intermediate stiffeners:
Arrangement (1)

Double-sided stiffeners
2No/100 mm x 15 mm flats
spaced at 3000 mm centres

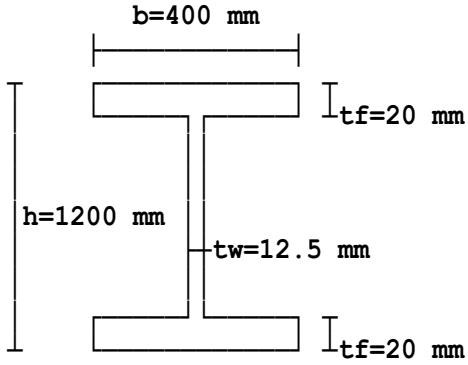

- **Fillet welds to be used for connecting stiffeners to girder web & flanges**
- **Weld sizes as detailed in calculations**
- **Weld design strength to be 222 N/mm²**

Assume non-rigid end posts to EN 1993-1-5, Figure 5.1 & Table 5.1.

Location: Ex4 - Intermediate stiffeners and non-rigid end posts

Stiffened plate girder

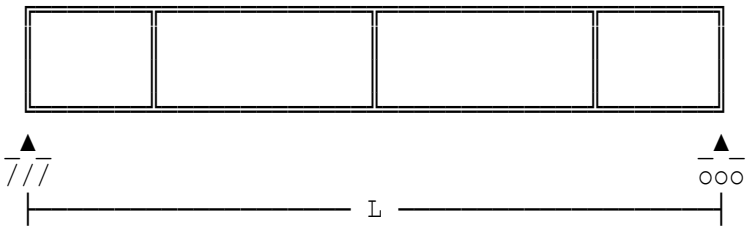

The girder is fully restrained along its length. The design calculations are in accordance with BS EN 1993-1-1 and BS EN 1993-1-5. Loads and moments are factored.

Assume non-rigid end posts to BS EN 1993-1-5, Figure 5.1 & Table 5.1.

Span of girder	L=12 m
Maximum design bending moment	MyEd=2800 kNm
Design bearing reaction	NbEd=1450 kN
Depth of girder	h=1240 mm
Web thickness	tw=12 mm
Stiffener corner snipe	snp=15 mm

Dimensions of web and flanges

Stiffener spacing of first panel	ae=1550 mm
Intermediate stiffener spacing	ai=5000 mm
Accompanying design shear	VzEd'=0 kN

Shear buckling resistance - EN 1993-1-1, Clause 6.2.6(6)

As hw/tw > 72*ew (99.167 > 66.558), the web shear buckling resistance needs to be checked (EN 1993-1-5 Clause 5.2 and 5.3).

Buckling coefficient (Annex A)	kt=5.34+4*(hw/a)^2=7.6977
Modified slenderness λ	lamw=hw/(37.4*tw*ew*SQR(kt))=1.0338
Shear resistance of web	VplRd=2184.8 kN

Reduced design shear resistance at support (web contribution only will be considered):

VbwRd=chiw*fyw*hw*tw/(3^0.5*gamM1*1000)=1820.3 kN

Design shear at support VEd(0)=NbEd=1450 kN

As VEd(0) ≤ VbwRd (1450 kN ≤ 1820.3 kN), the shear force is less than the shear resistance. Hence section OK.

compute comp=eta1+(1-MfRd/MplRd)*(2*eta3 -1)^2=0.78202

As comp ≤ 1 (0.78202 ≤ 1), interaction equation is satisfied.

Intermediate transverse web stiffeners - Arrangement (1)

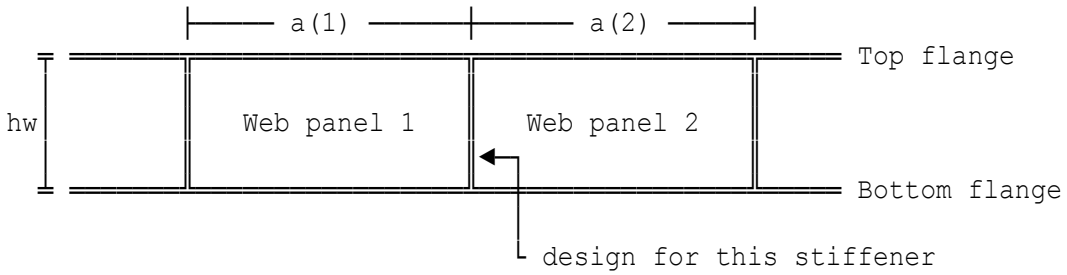

Elevation on web without longitudinal stiffening

Panel length 1 a(1)=5000 mm
Length of stiffener ls=1190 mm

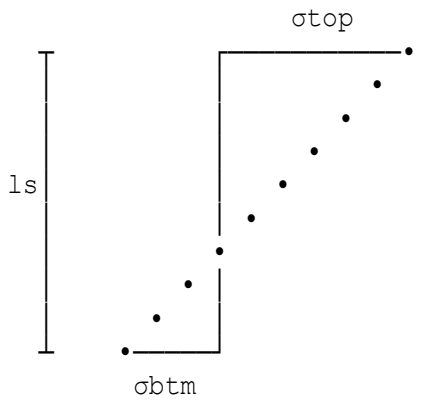

Longitudinal stresses in web with transverse stiffeners

ls=1190 mm

Compression stresses are positive

Stress at top of web plate (σtop) stop=230.45 N/mm²
Stress at btm of web plate (σbtm) sbtm=-230.45 N/mm²

Design parameters

Stiffener outstand hs1=150 mm
Stiffener thickness ts1=15 mm

Limiting outstand to prevent torsional buckling - Clause 9.2.1(8)

Yield strength to be adopted fy=275 N/mm²
Ratio (hs1/ts1) p=hs1/ts1=10
Limit to ratio p=(hs1/ts1) is 13ε=12.017.
Ratio (hs1/ts1)=10 is not greater than limit 13ε=12.017.
Stiffener complies with Clause 9.2.1(8).

Design shear resistance (single-sided transverse stiffener)

The effective cross section of the intermediate single-sided transverse stiffener is as shown below:

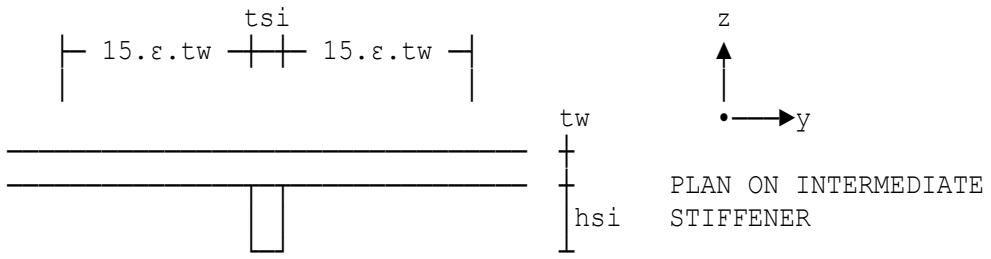

2nd moment of area yy axis Iyy=Ipro=13.86E6 mm⁴
Design shear resistance VbRd=chi*Ae*fyw/(gamM1*1000)=1747.2 kN

Axial force in the stiffener due to shear - BS EN 1993-1-5

Shear buckling coefficient for web panel kt is derived from Clause 5.2.
Buckling coefficient (Annex A) kt=5.34+4*(hw/a)^2=5.5666
Modified slenderness λw lamw=0.76*(fy/tcr)^0.5=1.2159
Max design shear force in panel VEd1=1200 kN
Externally applied design load Pext1=975 kN

Option 1:
Longitudinal compressive stress σxEd=0 for symmetrical sections.
Vertical force generated in stiffener arising from the shear induced tension field (see older version of NA to BS EN 1993-1-5:2006):
PEd1'=VEd1-hw*tw*0.8*tcr/1000=-27.358 kN

Option 2:
Vertical force generated in the stiffener as per BS EN 1993-1-5 (see NOTE, Clause 9.3.3(3)):
PEd1=VEd1-fyw*hw*tw/(SQR(3)*gamM1*lamw^2*1000)=-333.53 kN
Design axial load in stiffener PEd=PEd1+Pext1=975 kN
As PEd ≤ VbRd (975 kN ≤ 1747.2 kN), the design shear force does not exceed the shear resistance. Hence OK.

Connection to the web

Design shear load on weld FwEd=tw^2/(5*hs1)+PEd/(hw-2*snp)
=1.0325 kN/mm
Weld size provided sw1=6 mm

Stiffness check - Clause 9.3.3(3)

2nd moment of area (effe.section) Ipro=13.86E6 mm⁴
2nd moment of area required Ireq=0.75*hw*tw^3=1.5422E6 mm⁴
As Ireq ≤ Ipro (1.5422E6 mm⁴ ≤ 13.86E6 mm⁴), the stiffener is OK.

Web check between stiffeners

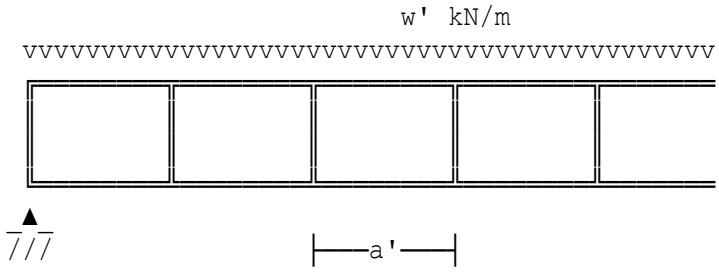

Girder assumed to have non-rigid end posts.

UDL applied between stiffeners w'=100 kN/m (factored load)
Largest panel length a'=5000 mm
Compressive stress of web sed=w'/tw=8.3333 N/mm²
Compressive strength of web fed=(2.75+2/(a'/hw)^2)*E/(C/tw)^2
=63.687 N/mm²
Since sed ≤ fed (8.3333 N/mm² ≤ 63.687 N/mm²), the web is OK.
Selected fillet weld size s=6 mm

Intermediate transverse web stiffeners - Arrangement (2)

Panel length 1 a(3)=4000 mm
Stiffener outstand hs2=100 mm
Stiffener thickness ts2=10 mm

Limiting outstand to prevent torsional buckling - Clause 9.2.1(8)

Yield strength to be adopted fy=275 N/mm²
Ratio (hs2/ts2) p=hs2/ts2=10
Limit to ratio p=(hs2/ts2) is 13ε=12.017.
Ratio (hs2/ts2)=10 is not greater than limit 13ε=12.017.
Stiffener complies with Clause 9.2.1(8).

Design shear resistance (single-sided transverse stiffener)

The effective cross section of the intermediate single-sided transverse stiffener is as shown below:

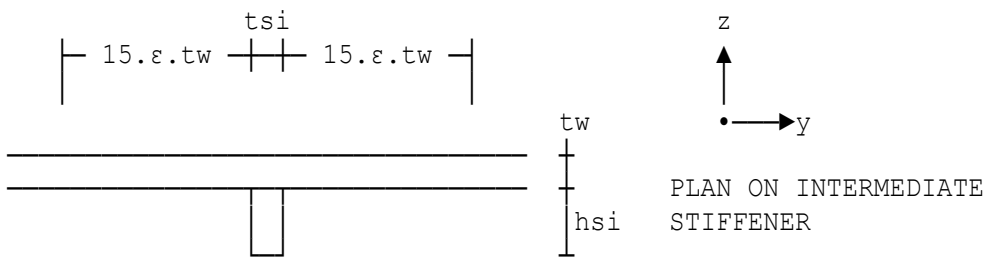

2nd moment of area yy axis Iyy=Ipro=3.4054E6 mm⁴
Design shear resistance VbRd=chi*Ae*fyw/(gamM1*1000)=1263 kN

Axial force in the stiffener due to shear

Max design shear force in panel VEd2=1500 kN
Externally applied design load Pext2=800 kN
Generated force to be adopted PEd2=244.62 kN
Design axial load in stiffener PEd'=PEd2+Pext2=1044.6 kN
As PEd' ≤ VbRd (1044.6 kN ≤ 1263 kN), the design shear force does not exceed the shear resistance. Hence OK.

Connection to the web

Design shear load on weld FwEd=tw^2/(5*hs2)+PEd'/(hw-2*snp)
=1.1885 kN/mm
Weld size provided sw2=6 mm

Stiffness check - Clause 9.3.3(3)

2nd moment of area (eff.section) Ipro=3.4054E6 mm⁴
2nd moment of area required Ireq=0.75*hw*tw^3=1.5422E6 mm⁴
As Ireq ≤ Ipro (1.5422E6 mm⁴ ≤ 3.4054E6 mm⁴), the stiffener is OK.

Bearing stiffener (double sided non-rigid end post)

It is assumed that the support reaction acts at the centroid of the effective stiffener section, such that there is no bending moment induced. Bearing stiffener consists a single double-sided stiffener. The stiffener effective cross section is as shown below:

One double-sided stiffener at support

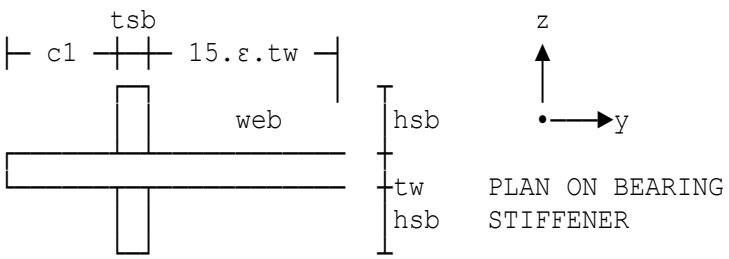

Depth of bearing stiffener hsb=150 mm
Thickness of bearing stiffener tsb=20 mm
Distance c1=100 mm
Design buckling resistance NbRd=chi*Ast*fysb/(gamM1*1000)
=2500.7 kN
As NbEd ≤ NbRd (1450 kN ≤ 2500.7 kN), the design bearing reaction at the support is less than the design buckling resistance. Hence satisfactory.

Limiting outstand to prevent torsional buckling - Clause 9.2.1(8)

Ratio (hsb/tsb) p=hsb/tsb=7.5
Limit to ratio p=(hsb/tsb) is 13ε=12.242.
Ratio (hsb/tsb)=7.5 is not greater than limit 13ε=12.242.
Stiffener complies with Clause 9.2.1(8).

DESIGN SUMMARY

Span of plate girder **12 m**
Design moment **2800 kNm**
All steel to be **Grade S 275**

End stiffener :

Posts 1 is a double-sided stiffener at end of girder.

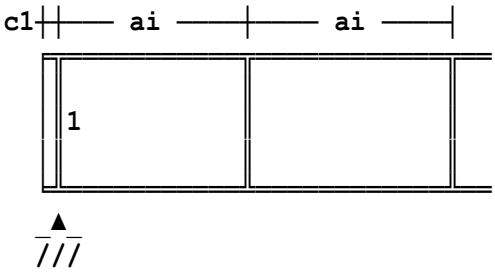

c1=100 mm

Double-sided stiffeners: post 1 **2No/150 mm x 20 mm flats**

Intermediate stiffeners

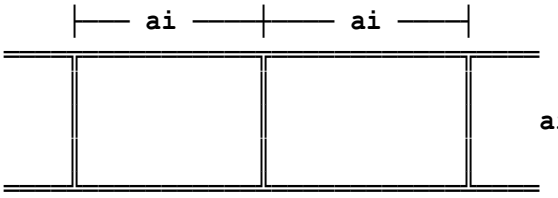

ai=5000 mm

Intermediate stiffeners:
Arrangement (1) **Single-sided stiffeners**
150 mm x 15 mm flats
spaced at 5000 mm centres

Intermediate stiffeners:
Arrangement (2) **Single-sided stiffeners**
100 mm x 10 mm flats
spaced at 4000 mm centres

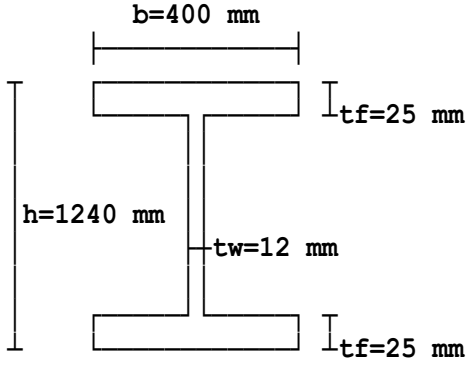

- **Fillet welds to be used for connecting stiffeners to girder web & flanges**
- **Weld sizes as detailed in calculations**
- **Weld design strength to be 222 N/mm²**

Assume non-rigid end posts to EN 1993-1-5, Figure 5.1 & Table 5.1.

Location: Ex5 - Practical Design of Steel Structures (by KM Ghosh)

Stiffened plate girder

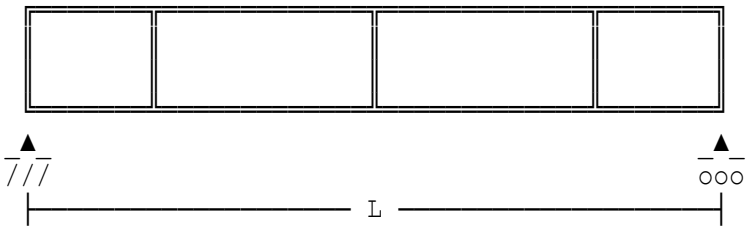

The girder is fully restrained along its length. The design calculations are in accordance with BS EN 1993-1-1 and BS EN 1993-1-5. Loads and moments are factored.

Assume non-rigid end posts to BS EN 1993-1-5, Figure 5.1 & Table 5.1.

Span of girder	L=23.38 m
Maximum design bending moment	MyEd=29515 kNm
Design bearing reaction	NbEd=6281 kN
Depth of girder	h=2500 mm
Web thickness	tw=35 mm
Stiffener corner snipe	snp=15 mm

Dimensions of web and flanges

Stiffener spacing of first panel	ae=2400 mm
Intermediate stiffener spacing	ai=2400 mm
Accompanying design shear	VzEd'=0 kN

Shear buckling resistance - EN 1993-1-1, Clause 6.2.6(6)

As hw/tw > 72*ew (68.286 > 67.802), the web shear buckling resistance needs to be checked (EN 1993-1-5 Clause 5.2 and 5.3).

Buckling coefficient (Annex A)	kt=5.34+4*(hw/a)^2=9.3067
Modified slenderness λ	lamw=hw/(37.4*tw*ew*SQR(kt))=0.63555
Shear resistance of web	VplRd=12315 kN

Reduced design shear resistance at support (web contribution only will be considered):

VbwRd=chiw*fyw*hw*tw/(3^0.5*gamM1*1000)=12798 kN

Design shear at support VEd(0)=NbEd=6281 kN

As VEd(0) ≤ VbwRd (6281 kN ≤ 12798 kN), the shear force is less than the shear resistance. Hence section OK.

Intermediate transverse web stiffeners - Arrangement (1)

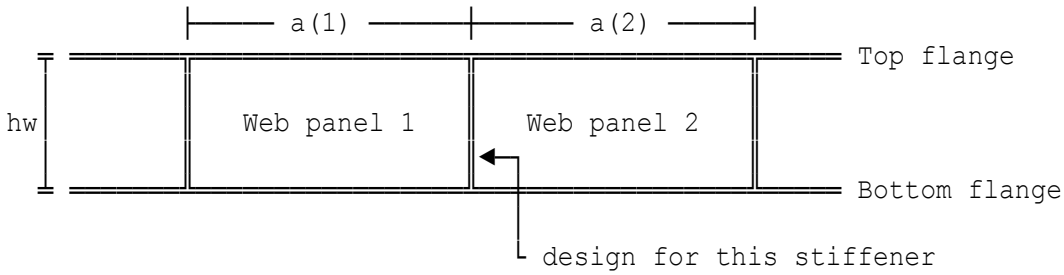

Elevation on web without longitudinal stiffening

Panel length 1 a(1)=2400 mm
Length of stiffener ls=2390 mm

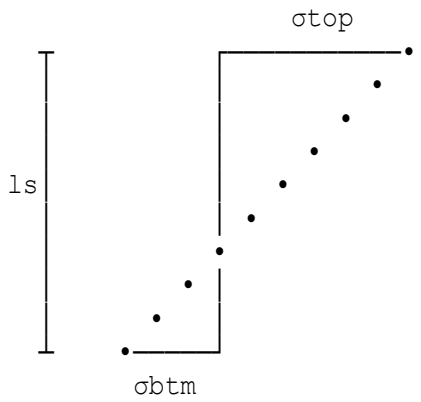

Longitudinal stresses in web with transverse stiffeners

ls=2390 mm

Compression stresses are positive

Stress at top of web plate (σtop) stop=243.87 N/mm²
Stress at btm of web plate (σbtm) sbtm=-243.87 N/mm²

Design parameters

Stiffener outstand hs1=250 mm
Stiffener thickness ts1=25 mm

Limiting outstand to prevent torsional buckling - Clause 9.2.1(8)

Yield strength to be adopted fy=265 N/mm²
Ratio (hs1/ts1) p=hs1/ts1=10
Limit to ratio p=(hs1/ts1) is 13ε=12.242.
Ratio (hs1/ts1)=10 is not greater than limit 13ε=12.242.
Stiffener complies with Clause 9.2.1(8).

Design shear resistance (double sided transverse stiffener)

The effective cross section of the intermediate double-sided transverse stiffener is as shown below:

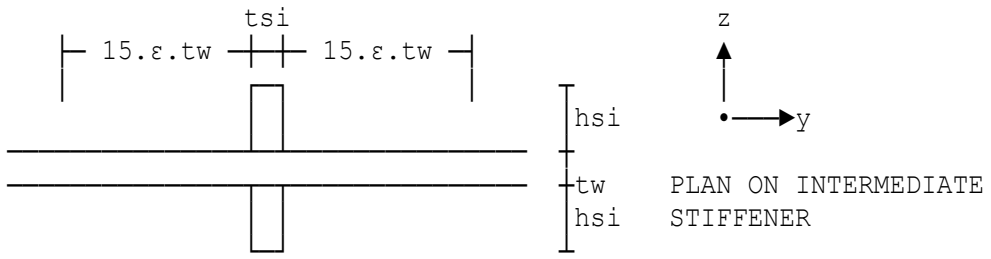

2nd moment of area yy axis:

Iyy=tsi*(2*hsi+tw)^3/12+(30*ew*tw)*tw^3/12
=322.55E6 mm⁴

Design shear resistance VbRd=chi*Ae*fyw/(gamM1*1000)=12410 kN

Axial force in the stiffener due to shear - BS EN 1993-1-5

Shear buckling coefficient for web panel kt is derived from Clause 5.2.

Buckling coefficient (Annex A)	kt=5.34+4*(hw/a)^2=9.3067
Modified slenderness λw	lamw=0.76*(fy/tcr)^0.5=0.63565
Max design shear force in panel	VEd1=5370 kN
Externally applied design load	Pext1=0 kN

Option 1:
Longitudinal compressive stress σxEd=0 for symmetrical sections.
Vertical force generated in stiffener arising from the shear induced tension field (see older version of NA to BS EN 1993-1-5:2006):

PEd1'=VEd1-hw*tw*0.8*tcr/1000=-19981 kN

Option 2:
Vertical force generated in the stiffener as per BS EN 1993-1-5 (see NOTE, Clause 9.3.3(3)):

PEd1=VEd1-fyw*hw*tw/(SQR(3)*gamM1*lamw^2*1000)=-26305 kN

Design axial load in stiffener PEd=PEd1+Pext1=0 kN
As PEd ≤ VbRd (0 kN ≤ 12410 kN), the design shear force does not exceed the shear resistance. Hence OK.

Connection to the web

Design shear load on weld	FwEd=tw^2/(5*hs1)=0.98 kN/mm
Weld size provided	sw1=6 mm

Stiffness check - Clause 9.3.3(3)

2nd moment of area (effe.section)	Ipro=322.55E6 mm⁴
2nd moment of area required	Ireq=1.5*hw^3*tw^3/a^2=152.43E6 mm⁴

As Ireq ≤ Ipro (152.43E6 mm⁴ ≤ 322.55E6 mm⁴), the stiffener is OK.

Web check between stiffeners

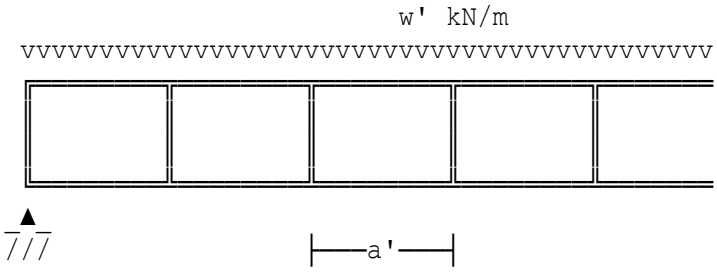

Girder assumed to have non-rigid end posts.

UDL applied between stiffeners w'=432 kN/m (factored load)
Largest panel length a'=2400 mm
Compressive stress of web sed=w'/tw=12.343 N/mm²
Compressive strength of web fed=(2.75+2/(a'/hw)^2)*E/(C/tw)^2
=217.52 N/mm²
Since sed ≤ fed (12.343 N/mm² ≤ 217.52 N/mm²), the web is OK.
Selected fillet weld size s=13 mm

Bearing stiffener (double sided non-rigid end post)

It is assumed that the support reaction acts at the centroid of the effective stiffener section, such that there is no bending moment induced. Bearing stiffener consists a single double-sided stiffener. The stiffener effective cross section is as shown below:

One double-sided stiffener at support

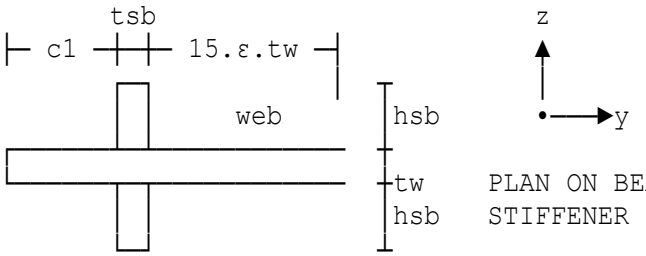

PLAN ON BEARING STIFFENER

Depth of bearing stiffener hsb=300 mm
Thickness of bearing stiffener tsb=30 mm
Distance c1=250 mm
Design buckling resistance NbRd=chi*Ast*fyw/(gamM1*1000)=11952 kN
As NbEd ≤ NbRd (6281 kN ≤ 11952 kN), the design bearing reaction at the support is less than the design buckling resistance. Hence satisfactory.

Limiting outstand to prevent torsional buckling - Clause 9.2.1(8)

Ratio (hsb/tsb) p=hsb/tsb=10
Limit to ratio p=(hsb/tsb) is 13ε=12.242.
Ratio (hsb/tsb)=10 is not greater than limit 13ε=12.242.
Stiffener complies with Clause 9.2.1(8).

DESIGN SUMMARY

Span of plate girder **23.38 m**
Design moment **29515 kNm**
All steel to be **Grade S 275**

End stiffener :

Posts 1 is a double-sided stiffener at end of girder.

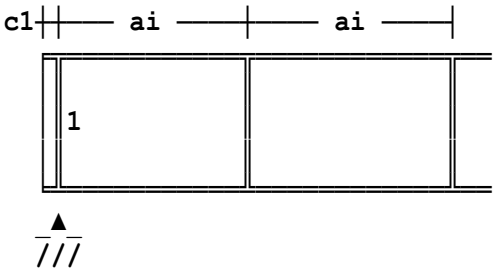

c1=250 mm

Double-sided stiffeners: post 1 2No/300 mm x 30 mm flats

Intermediate stiffeners

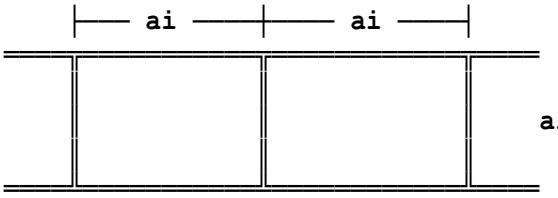

ai=2400 mm

Intermediate stiffeners:
Arrangement (1)

Double-sided stiffeners
2No/250 mm x 25 mm flats
spaced at 2400 mm centres

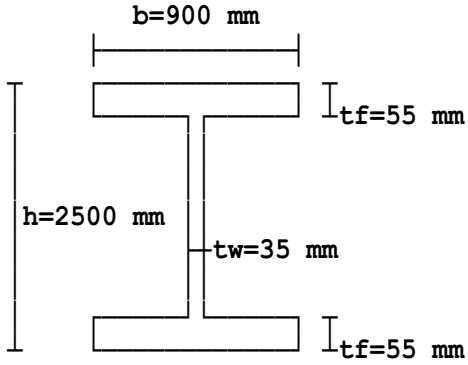

- **Fillet welds to be used for connecting stiffeners to girder web & flanges**
- **Weld sizes as detailed in calculations**
- **Weld design strength to be 222 N/mm²**

Assume non-rigid end posts to EN 1993-1-5, Figure 5.1 & Table 5.1.

Location: Ex6 - Class 4 section

Stiffened plate girder - with rigid end post

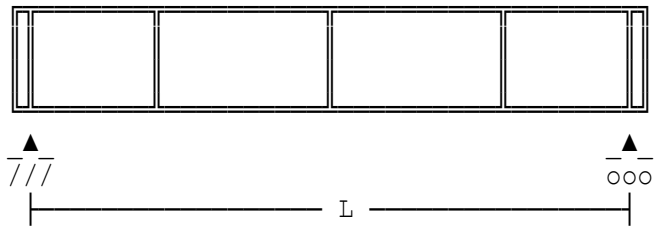

The girder is fully restrained along its length. The design calculations are in accordance with BS EN 1993-1-1 and BS EN 1993-1-5. Loads and moments are factored.

Assume rigid end posts (two double-sided stiffeners at supports).

Span of girder	L=25 m
Maximum design bending moment	MyEd=14028 kNm
Design bearing reaction	NbEd=2200 kN
Depth of girder	h=2030 mm
Web thickness	tw=13 mm
Stiffener corner snipe	snp=15 mm

Determine the effective section properties - EN 1992-1-5, Cl. 4.4

The process is iterative as the amount of web not considered is a function of the stresses at the top and bottom of the web.

Iteration 1:

Gross area of section	A=2*b*tf+hw*tw=81350 mm²
Gross 2nd moment of area	Iy=(b*(hw+2*tf)^3-(b-tw)*hw^3)/12 =63.482E9 mm⁴
Stress at top of web	s1=MyEd*10^6*hw/2/Iy=215.45 N/mm²
Stress at bottom of web	s2=-MyEd*10^6*hw/2/Iy=-215.45 N/mm²

Iteration 10 :

Position of effective centroid:

zeff=(A*h/2-Aw*(zeffp+be2+lw/2))/Aeff=993.96 mm

Effective 2nd moment of area:

Iyeff=Iy+A*(h/2-zeff)^2-tw*lw^3/12-Aw*(zeffp+be2+lw/2-zeff)^2 =62.521E9 mm⁴

Top of web stress	s1(10)=MyEd*10^6*(h-tf-zeff)/Iyeff =223.48 N/mm²
Bottom of web stress	s2(10)=-MyEd*10^6*(zeff-tf)/Iyeff =-214.04 N/mm²
Net loss area	Aw=lw*tw=2977.9 mm²
Effective area of section	Aeff=A-Aw=78372 mm²
Effective section modulus	Weffy=Iyeff/(1000*(h-zeff))=60346 cm³

Dimensions of web and flanges

Stiffener spacing of first panel ae=2500 mm
Intermediate stiffener spacing ai=2500 mm
Accompanying design shear VzEd'=0 kN

Bearing stiffeners double sided - BS EN 1993-1-5 section 9

Bearing stiffeners are assumed to be symmetric about the beam web and will be designed as a strut to BS EN 1993-1-5 Clause 9.4(2), resisting the bearing reaction together with any eccentricities.

compute kt from Annex A kt=5.34+4*(hw/a)^2=7.7736
Design shear resistance VbRd=chiw*fy*hw*tw/(SQR(3)*gamM1 *1000)=2355.2 kN
Design shear at the support VEd(0)=NbRd=2200 kN
As VEd(0) ≤ VbRd (2200 kN ≤ 2355.2 kN), the design shear at the support is less than the design shear resistance. Hence OK.

Action as a bearing stiffener

Two double-sided stiffeners at support

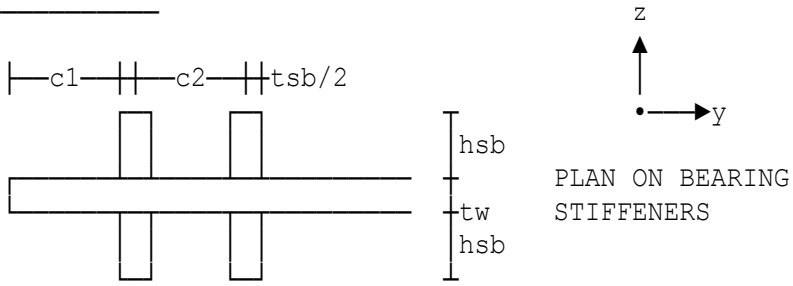

NOTE: Stiffeners to be equally spaced about the centreline of bearing.
Depth of bearing stiffener hsb=250 mm
Thickness of bearing stiffener tsb=25 mm
Distance c1=0 mm
Distance between stiffener CL's c2=300 mm
Eccentricity in each direction ecc=10 mm
Worst stress in web plate:
swp=NbEd*1E3/A+MzEdb*1E6*(15*ew*tw+tsb/2+c2/2)/(Izz) =80.428 N/mm²
Worst stress in stiffener:
compute comp1=NbEd*1E3/A=69.69 N/mm²
compute comp2=MzEdb*1E6*(c2/2+tsb/2)/(Izz) =5.0909 N/mm²
compute comp3=MyEdb*1E6*(hsb+tw/2)/(Iyy) =10.032 N/mm²
Stiffener stress sst=comp1+comp2+comp3=84.812 N/mm²

Limiting outstand to prevent torsional buckling - Clause 9.2.1(8)

Ratio (hsb/tsb) p=hsb/tsb=10
Limit to ratio p=(hsb/tsb) is 13ε=12.242.
Ratio (hsb/tsb)=10 is not greater than limit 13ε=12.242.
Stiffener complies with Clause 9.2.1(8).

Action as a rigid end post

A rigid end post comprise of two double-sided transverse stiffeners that form the flanges of a short beam of length hw. The effective section below will be taken to exclude the outer parts of web plate.

Two double-sided stiffeners at support

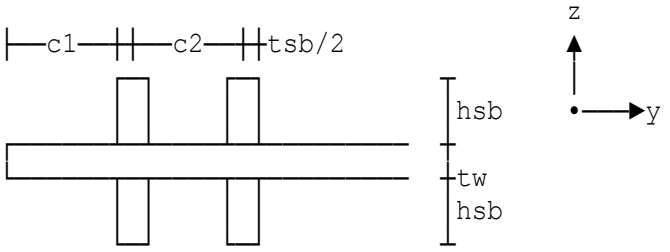

Minimum area Amin=4*hw*tw^2/c2=4394 mm²
Actual area provided Asp=2*hsb*tsb=12500 mm²
As Asp ≥ Amin (12500 mm² ≥ 4394 mm²), stiffener area is adequate.
In-plane moment MzEdm=NH*hw/(8*1E3)=513.98 kNm
End post 2nd moment of area Izze=2*(Asp*(c2/2)^2)=562.5E6 mm⁴
Worst stiffener stress from membrane action will be calculated below.
Stress due to membrane action sstm=MzEdm*1E6/(Izze/(c2/2+tsb/2))
=148.48 N/mm²

Cross-section resistance check

The maximum stresses from membrane action and bearing reaction will be added together here for simplicity, even though they occur at different heights on the stiffener.
Total stress sstT=sst+sstm=233.3 N/mm²
As sstT ≤ fy (233.3 N/mm² ≤ 265 mm²), stiffener is OK.

Buckling check under combined bending and axial load

The stiffener will be checked for buckling under combined bending and axial load in accordance with BS EN 1993-1-1, Clause 6.3.3.
Critical load Ncry=PI^2*E*Iyy/(Lcry^2*1000)
=306613 kN
Slenderness of the stiffener lamb=(A*fy/(Ncry*1E3))^0.5=0.16518
Design axial load resistance NplRd=A*fy/(gamM1*1000)=8365.6 kN
Design moment resistance yy axis MyRd=Wely*fy/(gamM1*1E6)=581.16 kNm
Design moment resistance zz axis MzRdb=Welzb*fy/(gamM1*1E6)
=1145.2 kNm (bearing)
Design moment resistance zz axis MzRdm=Welzm*fy/(gamM1*1E6)
=917.31 kNm (membrane)
Interaction equation:
Uni=NEd/(chiy*NplRd)+ratio*(MyEd/MyRd)+(MzEdb/MzRdb+MzEdm/MzRdm)
=0.88064

As Uni ≤ 1.0 (0.88064 ≤ 1.0), the interaction equation is OK.

Connection of stiffeners to girder web

Net stiffener length	Lsn=hw-2*snp=1920 mm
Assumed weld size	ss'=6 mm
Effective length of weld	Lw=8*(Lsn-2*ss')=15264 mm
Design load on weld	FwEd=NbEd*10^3/Lw=144.13 N/mm
Design weld resistance	FwRd=0.7*ss'*fvwd=935.71 N/mm

Shear buckling resistance - EN 1993-1-1, Clause 6.2.6(6)

As hw/tw > 72*ew (150 > 66.558), the web shear buckling resistance needs to be checked (EN 1993-1-5 Clause 5.2 and 5.3).

Buckling coefficient (Annex A)	kt=5.34+4*(hw/a)^2=7.7736
Modified slenderness λ	lamw=hw/(37.4*tw*ew*SQR(kt))=1.5561
Shear resistance of web	VplRd=3878.5 kN

Reduced design shear resistance at support (web contribution only will be considered):

VbwRd=chiw*fyw*hw*tw/(3^0.5*gamM1*1000)=2444 kN

Design shear at support	VEd(0)=NbEd=2200 kN

As VEd(0) ≤ VbwRd (2200 kN ≤ 2444 kN), the shear force is less than the shear resistance. Hence section OK.

compute	comp=eta1+(1-MfRd/MplRd)*(2*eta3 -1)^2=0.9263

As comp ≤ 1 (0.9263 ≤ 1), interaction equation is satisfied.

Intermediate transverse web stiffeners - Arrangement (1)

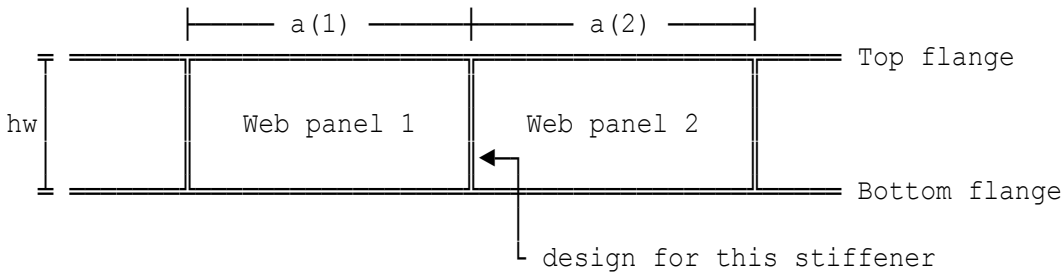

Elevation on web without longitudinal stiffening

Panel length 1	a(1)=2500 mm
Length of stiffener	ls=1950 mm

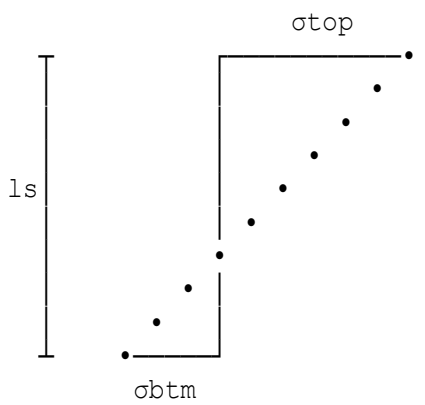

Longitudinal stresses in web with transverse stiffeners

ls=1950 mm

Compression stresses are positive

Stress at top of web plate (σtop) stop=251.76 N/mm²
Stress at btm of web plate (σbtm) sbtm=-251.76 N/mm²

Design parameters

Stiffener outstand hs1=150 mm
Stiffener thickness ts1=20 mm

Limiting outstand to prevent torsional buckling - Clause 9.2.1(8)

Yield strength to be adopted fy=275 N/mm²
Ratio (hs1/ts1) p=hs1/ts1=7.5
Limit to ratio p=(hs1/ts1) is 13ε=12.017.
Ratio (hs1/ts1)=7.5 is not greater than limit 13ε=12.017.
Stiffener complies with Clause 9.2.1(8).

Design shear resistance (double sided transverse stiffener)

The effective cross section of the intermediate double-sided transverse stiffener is as shown below:

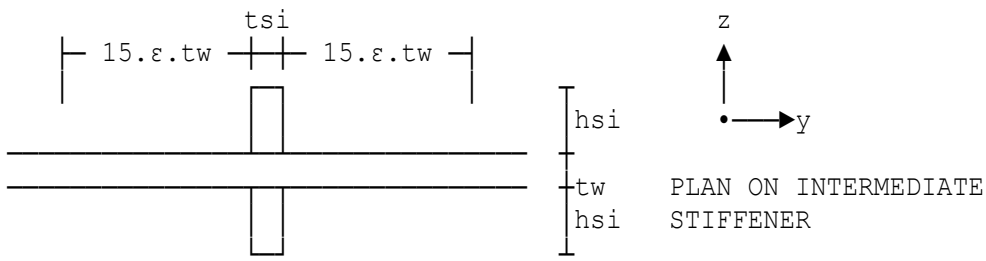

2nd moment of area yy axis:
Iyy=tsi*(2*hsi+tw)^3/12+(30*ew*tw)*tw^3/12
=51.173E6 mm⁴
Design shear resistance VbRd=chi*Ae*fysi/(gamM1*1000)
=2839.1 kN

Axial force in the stiffener due to shear - BS EN 1993-1-5

Shear buckling coefficient for web panel kt is derived from Clause 5.2.
Buckling coefficient (Annex A) kt=5.34+4*(hw/a)^2=7.7736
Modified slenderness λw lamw=0.76*(fy/tcr)^0.5=1.5564
Max design shear force in panel VEd1=2000 kN
Externally applied design load Pext1=0 kN

Option 1:
Longitudinal compressive stress σxEd=0 for symmetrical sections.
Vertical force generated in stiffener arising from the shear induced tension field (see older version of NA to BS EN 1993-1-5:2006):
PEd1'=VEd1-hw*tw*0.8*tcr/1000=670.15 kN

Option 2:
Vertical force generated in the stiffener as per BS EN 1993-1-5 (see NOTE, Clause 9.3.3(3)):
PEd1=VEd1-fyw*hw*tw/(SQR(3)*gamM1*lamw^2*1000)=338.4 kN
Generated force to be adopted PEd1=670.15 kN

Design axial load in stiffener PEd=PEd1+Pext1=670.15 kN
As PEd ≤ VbRd (670.15 kN ≤ 2839.1 kN), the design shear force does not exceed the shear resistance. Hence OK.

Connection to the web

Design shear load on weld FwEd=tw^2/(5*hs1)+PEd/(2*(hw-2*snp))
=0.39985 kN/mm
Weld size provided sw1=6 mm

Stiffness check - Clause 9.3.3(3)

2nd moment of area (effe.section) Ipro=51.173E6 mm⁴
2nd moment of area required Ireq=1.5*hw^3*tw^3/a^2=3.9097E6 mm⁴
As Ireq ≤ Ipro (3.9097E6 mm⁴ ≤ 51.173E6 mm⁴), the stiffener is OK.

Web check between stiffeners

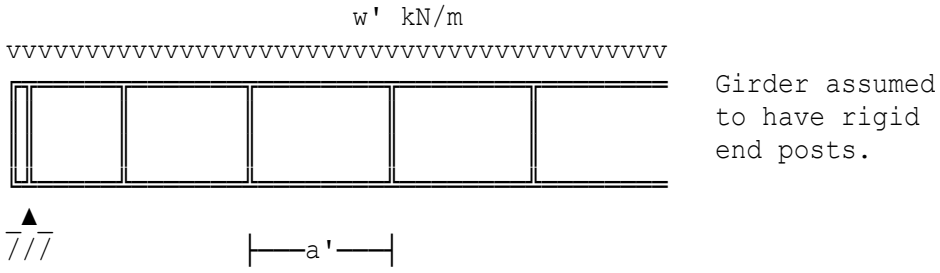

Girder assumed to have rigid end posts.

UDL applied between stiffeners w'=92 kN/m (factored load)
Largest panel length a'=2500 mm
Compressive stress of web sed=w'/tw=7.0769 N/mm²
Compressive strength of web fed=(2.75+2/(a'/hw)^2)*E/(C/tw)^2
=37.952 N/mm²
Since sed ≤ fed (7.0769 N/mm² ≤ 37.952 N/mm²), the web is OK.
Selected fillet weld size s=12 mm

Intermediate transverse web stiffeners - Arrangement (2)

Panel length 1 a(3)=2800 mm
Stiffener outstand hs2=200 mm
Stiffener thickness ts2=20 mm

Limiting outstand to prevent torsional buckling - Clause 9.2.1(8)

Yield strength to be adopted fy=265 N/mm²
Ratio (hs2/ts2) p=hs2/ts2=10
Limit to ratio p=(hs2/ts2) is 13ε=12.242.
Ratio (hs2/ts2)=10 is not greater than limit 13ε=12.242.
Stiffener complies with Clause 9.2.1(8).

Design shear resistance (double sided transverse stiffener)

The effective cross section of the intermediate double-sided transverse stiffener is as shown below:

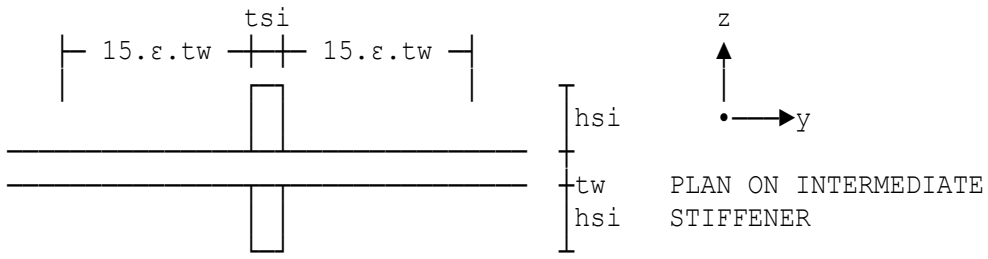

2nd moment of area yy axis:

Iyy=tsi*(2*hsi+tw)^3/12+(30*ew*tw)*tw^3/12
=117.47E6 mm⁴

Design shear resistance VbRd=chi*Ae*fysi/(gamM1*1000)
=3430.9 kN

Axial force in the stiffener due to shear

Max design shear force in panel VEd2=2200 kN
Externally applied design load Pext2=0 kN
Generated force to be adopted PEd2=954.56 kN
Design axial load in stiffener PEd'=PEd2+Pext2=954.56 kN
As PEd' ≤ VbRd (954.56 kN ≤ 3430.9 kN), the design shear force does not exceed the shear resistance. Hence OK.

Connection to the web

Design shear load on weld FwEd=tw^2/(5*hs2)+PEd'/(2*(hw-2*snp))=0.41758 kN/mm
Weld size provided sw2=6 mm

Stiffness check - Clause 9.3.3(3)

2nd moment of area (eff.section) Ipro=117.47E6 mm⁴
2nd moment of area required Ireq=0.75*hw*tw^3=3.2131E6 mm⁴
As Ireq ≤ Ipro (3.2131E6 mm⁴ ≤ 117.47E6 mm⁴), the stiffener is OK.

DESIGN SUMMARY

Span of plate girder **25 m**
Design moment **14028 kNm**
All steel to be **Grade S 275**

End stiffeners:

Posts 1 & 2 are double-sided stiffeners at end of girder.

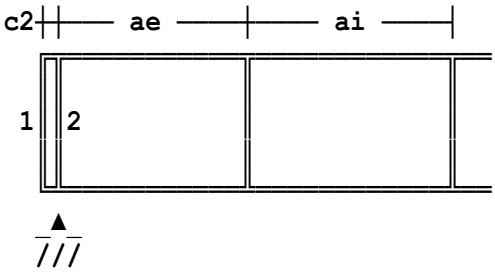

c2=300 mm
ae=2500 mm
ai=2500 mm

Double-sided stiffeners: post 1 2No/250 mm x 25 mm flats
post 2 2No/250 mm x 25 mm flats

Intermediate stiffeners:
Arrangement (1) **Double-sided stiffeners 2No/150 mm x 20 mm flats spaced at 2500 mm centres**

Intermediate stiffeners:
Arrangement (2) **Double-sided stiffeners 2No/200 mm x 20 mm flats spaced at 2800 mm centres**

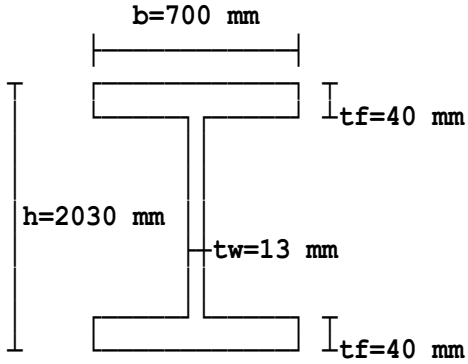

- **Fillet welds to be used for connecting stiffeners to girder web & flanges**
- **Weld sizes as detailed in calculations**
- **Weld design strength to be 222 N/mm²**

Assume rigid end posts to BS EN 1993-1-5, Figure 5.1 & Table 5.1.

Location: Ex7 - Plate girder example in Steel Designers Manual

Stiffened plate girder

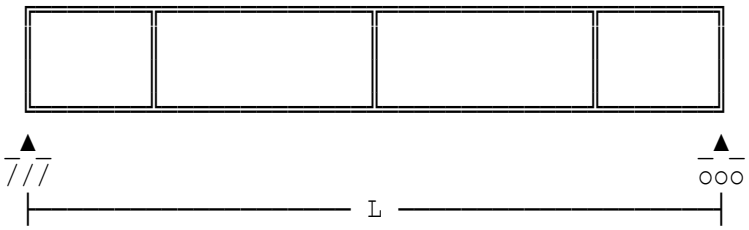

The girder is fully restrained along its length. The design calculations are in accordance with BS EN 1993-1-1 and BS EN 1993-1-5. Loads and moments are factored.

Assume non-rigid end posts to BS EN 1993-1-5, Figure 5.1 & Table 5.1.

Span of girder	L=30 m
Maximum design bending moment	MyEd=18909 kNm
Design bearing reaction	NbEd=2293 kN
Depth of girder	h=2100 mm
Web thickness	tw=15 mm
Stiffener corner snipe	snp=15 mm

Determine the effective section properties - EN 1992-1-5, Cl. 4.4

The process is iterative as the amount of web not considered is a function of the stresses at the top and bottom of the web.

Iteration 1:

Gross area of section	A=2*b*tf+hw*tw=105000 mm²
Gross 2nd moment of area	Iy=(b*(hw+2*tf)^3-(b-tw)*hw^3)/12 =88.813E9 mm⁴
Stress at top of web	s1=MyEd*10^6*hw/2/Iy=212.91 N/mm²
Stress at bottom of web	s2=-MyEd*10^6*hw/2/Iy=-212.91 N/mm²

Iteration 10 :

Position of effective centroid:

zeff=(A*h/2-Aw*(zeffp+be2+lw/2))/Aeff=1039.7 mm

Effective 2nd moment of area:

Iyeff=Iy+A*(h/2-zeff)^2-tw*lw^3/12-Aw*(zeffp+be2+lw/2-zeff)^2 =88.178E9 mm⁴

Top of web stress	s1(10)=MyEd*10^6*(h-tf-zeff)/Iyeff =216.65 N/mm²
Bottom of web stress	s2(10)=-MyEd*10^6*(zeff-tf)/Iyeff =-212.23 N/mm²
Net loss area	Aw=lw*tw=1823.4 mm²
Effective area of section	Aeff=A-Aw=103177 mm²
Effective section modulus	Weffy=Iyeff/(1000*(h-zeff))=83162 cm³

Dimensions of web and flanges

Stiffener spacing of first panel ae=1550 mm
Intermediate stiffener spacing ai=3900 mm
Accompanying design shear VzEd'=0 kN

Shear buckling resistance - EN 1993-1-1, Clause 6.2.6(6)

As hw/tw > 72*ew (133.33 > 66.558), the web shear buckling resistance needs to be checked (EN 1993-1-5 Clause 5.2 and 5.3).
Buckling coefficient (Annex A) kt=4+5.34*(hw/a)^2=12.891
Modified slenderness λ lamw=hw/(37.4*tw*ew*SQR(kt))=1.0741
Shear resistance of web VplRd=4416.7 kN
Reduced design shear resistance at support (web contribution only will be considered):
VbwRd=chiw*fyw*hw*tw/(3^0.5*gamM1*1000)=3680.5 kN

Design shear at support VEd(0)=NbEd=2293 kN
As VEd(0) ≤ VbwRd (2293 kN ≤ 3680.5 kN), the shear force is less than the shear resistance. Hence section OK.
compute comp=eta1+(1-MfRd/MplRd)*(2*eta3 -1)^2=0.89624
As comp ≤ 1 (0.89624 ≤ 1), interaction equation is satisfied.

Intermediate transverse web stiffeners - Arrangement (1)

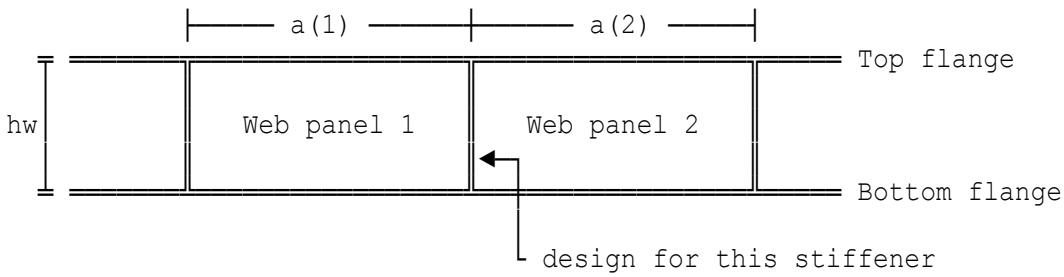

Elevation on web without longitudinal stiffening

Panel length 1 a(1)=3900 mm
Length of stiffener ls=2000 mm

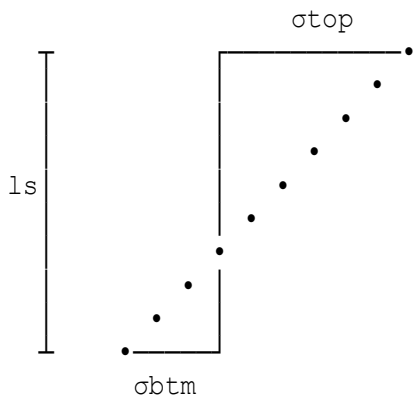

Longitudinal stresses in web with transverse stiffeners

ls=2000 mm

Compression stresses are positive

Stress at top of web plate (σtop) stop=245.97 N/mm²
Stress at btm of web plate (σbtm) sbtm=-245.97 N/mm²

Design parameters

Stiffener outstand hs1=80 mm
Stiffener thickness ts1=15 mm

Limiting outstand to prevent torsional buckling - Clause 9.2.1(8)

Yield strength to be adopted fy=275 N/mm²
Ratio (hs1/ts1) p=hs1/ts1=5.3333
Limit to ratio p=(hs1/ts1) is 13ε=12.017.
Ratio (hs1/ts1)=5.3333 is not greater than limit 13ε=12.017.
Stiffener complies with Clause 9.2.1(8).

Design shear resistance (double sided transverse stiffener)

The effective cross section of the intermediate double-sided transverse stiffener is as shown below:

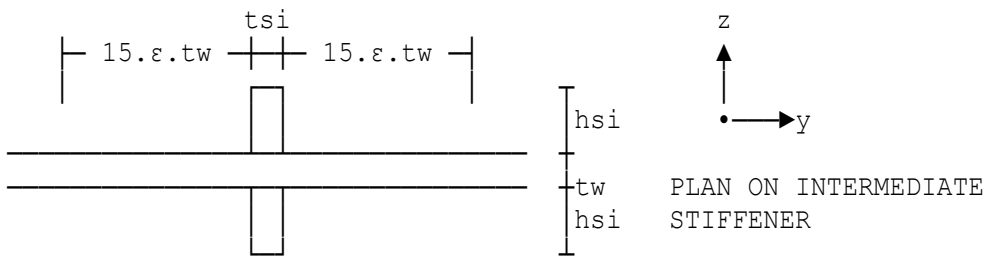

2nd moment of area yy axis:
Iyy=tsi*(2*hsi+tw)^3/12+(30*ew*tw)*tw^3/12
=6.8162E6 mm⁴
Design shear resistance VbRd=chi*Ae*fyw/(gamM1*1000)=1880.9 kN

Axial force in the stiffener due to shear - BS EN 1993-1-5

Shear buckling coefficient for web panel kt is derived from Clause 5.2.
Buckling coefficient (Annex A) kt=5.34+4*(hw/a)^2=6.3919
Modified slenderness λw lamw=0.76*(fy/tcr)^0.5=1.5256
Max design shear force in panel VEd1=2152 kN
Externally applied design load Pext1=0 kN

Option 1:
Longitudinal compressive stress σxEd=0 for symmetrical sections.
Vertical force generated in stiffener arising from the shear induced tension field (see older version of NA to BS EN 1993-1-5:2006):
PEd1'=VEd1-hw*tw*0.8*tcr/1000=514.19 kN

Option 2:
Vertical force generated in the stiffener as per BS EN 1993-1-5 (see NOTE, Clause 9.3.3(3)):
PEd1=VEd1-fyw*hw*tw/(SQR(3)*gamM1*lamw^2*1000)=105.63 kN
Generated force to be adopted PEd1=514.19 kN
Design axial load in stiffener PEd=PEd1+Pext1=514.19 kN

As PEd ≤ VbRd (514.19 kN ≤ 1880.9 kN), the design shear force does not exceed the shear resistance. Hence OK.

Connection to the web

Design shear load on weld FwEd=tw^2/(5*hs1)+PEd/(2*(hw-2*snp))
=0.69301 kN/mm
Weld size provided sw1=6 mm

Stiffness check - Clause 9.3.3(3)

2nd moment of area (effe.section) Ipro=6.8162E6 mm⁴
2nd moment of area required Ireq=0.75*hw*tw^3=5.0625E6 mm⁴
As Ireq ≤ Ipro (5.0625E6 mm⁴ ≤ 6.8162E6 mm⁴), the stiffener is OK.

Web check between stiffeners

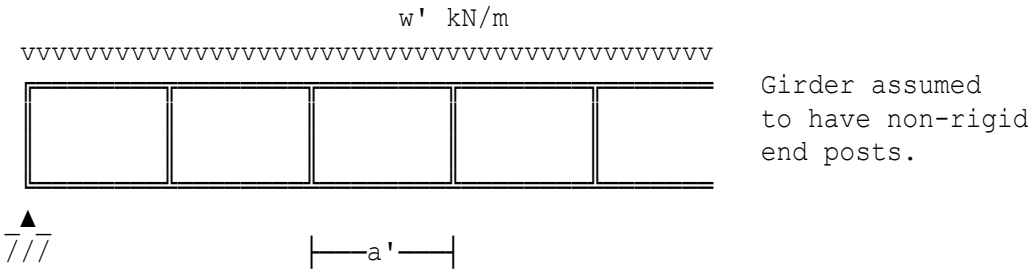

Girder assumed to have non-rigid end posts.

UDL applied between stiffeners w'=91.2 kN/m (factored load)
Largest panel length a'=3900 mm
Compressive stress of web sed=w'/tw=6.08 N/mm²
Compressive strength of web fed=(2.75+2/(a'/hw)^2)*E/(C/tw)^2
=39.643 N/mm²
Since sed ≤ fed (6.08 N/mm² ≤ 39.643 N/mm²), the web is OK.
Selected fillet weld size s=8 mm

Intermediate transverse web stiffeners - Arrangement (2)

Panel length 1 a(3)=5650 mm
Stiffener outstand hs2=80 mm
Stiffener thickness ts2=15 mm

Limiting outstand to prevent torsional buckling - Clause 9.2.1(8)

Yield strength to be adopted fy=275 N/mm²
Ratio (hs2/ts2) p=hs2/ts2=5.3333
Limit to ratio p=(hs2/ts2) is 13ε=12.017.
Ratio (hs2/ts2)=5.3333 is not greater than limit 13ε=12.017.
Stiffener complies with Clause 9.2.1(8).

Axial force in the stiffener due to shear

Max design shear force in panel VEd2=1440 kN
Externally applied design load Pext2=925 kN
Design axial load in stiffener PEd'=PEd2+Pext2=925 kN

As PEd' ≤ VbRd (925 kN ≤ 1880.9 kN), the design shear force does not exceed the shear resistance. Hence OK.

Connection to the web

Design shear load on weld FwEd=tw^2/(5*hs2)+PEd'/(2*(hw-2 *snp))=0.79727 kN/mm
Weld size provided sw2=6 mm

Stiffness check - Clause 9.3.3(3)

2nd moment of area (eff.section) Ipro=6.8162E6 mm⁴
2nd moment of area required Ireq=0.75*hw*tw^3=5.0625E6 mm⁴
As Ireq ≤ Ipro (5.0625E6 mm⁴ ≤ 6.8162E6 mm⁴), the stiffener is OK.

Bearing stiffener (double sided non-rigid end post)

It is assumed that the support reaction acts at the centroid of the effective stiffener section, such that there is no bending moment induced. Bearing stiffener consists a single double-sided stiffener. The stiffener effective cross section is as shown below:

One double-sided stiffener at support

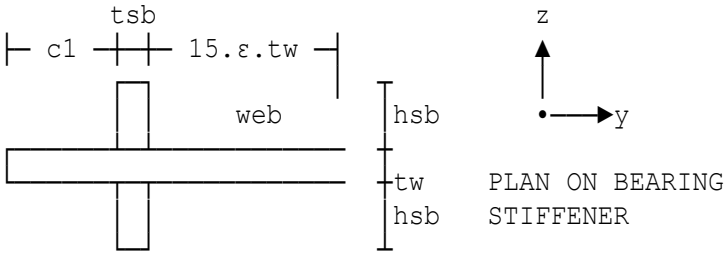

Depth of bearing stiffener hsb=280 mm
Thickness of bearing stiffener tsb=24 mm
Distance c1=0 mm
Design buckling resistance NbRd=chi*Ast*fysb/(gamM1*1000) =4483.8 kN
As NbEd ≤ NbRd (2293 kN ≤ 4483.8 kN), the design bearing reaction at the support is less than the design buckling resistance. Hence satisfactory.

Limiting outstand to prevent torsional buckling - Clause 9.2.1(8)

Ratio (hsb/tsb) p=hsb/tsb=11.667
Limit to ratio p=(hsb/tsb) is 13ε=12.242.
Ratio (hsb/tsb)=11.667 is not greater than limit 13ε=12.242.
Stiffener complies with Clause 9.2.1(8).

DESIGN SUMMARY

Span of plate girder **30 m**
Design moment **18909 kNm**
All steel to be **Grade S 275**

End stiffener :

Posts 1 is a double-sided stiffener at end of girder.

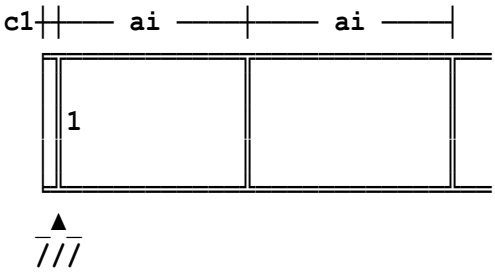

c1=0 mm

Double-sided stiffeners: post 1 **2No/280 mm x 24 mm flats**

Intermediate stiffeners

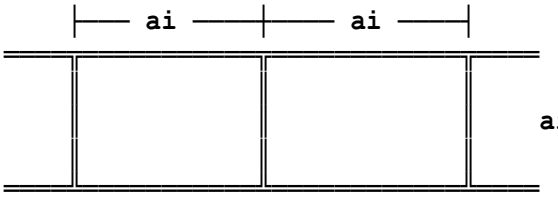

ai=3900 mm

Intermediate stiffeners:
Arrangement (1) **Double-sided stiffeners**
2No/80 mm x 15 mm flats
spaced at 3900 mm centres

Intermediate stiffeners:
Arrangement (2) **Double-sided stiffeners**
2No/80 mm x 15 mm flats
spaced at 5650 mm centres

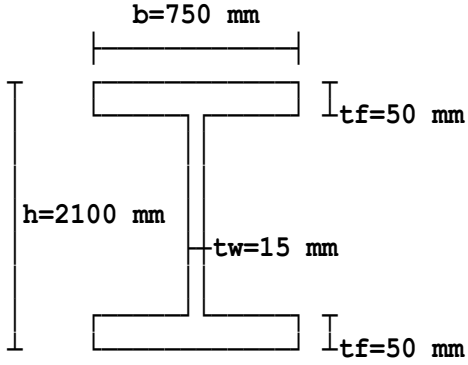

- **Fillet welds to be used for connecting stiffeners to girder web & flanges**
- **Weld sizes as detailed in calculations**
- **Weld design strength to be 222 N/mm²**

Assume non-rigid end posts to EN 1993-1-5, Figure 5.1 & Table 5.1.

Location: Ex8 - Single-sided intermediate stiffeners

Stiffened plate girder

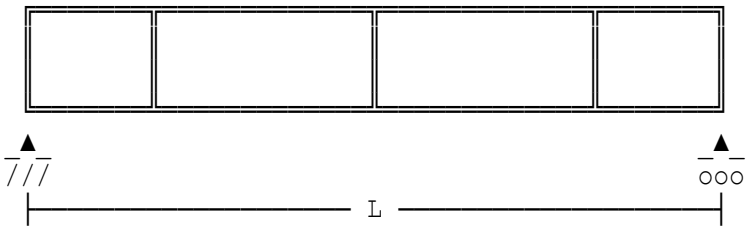

The girder is fully restrained along its length. The design calculations are in accordance with BS EN 1993-1-1 and BS EN 1993-1-5. Loads and moments are factored.

Assume non-rigid end posts to BS EN 1993-1-5, Figure 5.1 & Table 5.1.

Span of girder	L=12 m
Maximum design bending moment	MyEd=2800 kNm
Design bearing reaction	NbEd=1450 kN
Depth of girder	h=1240 mm
Web thickness	tw=12 mm
Stiffener corner snipe	snp=15 mm

Dimensions of web and flanges

Stiffener spacing of first panel	ae=1550 mm
Intermediate stiffener spacing	ai=5000 mm
Accompanying design shear	VzEd'=0 kN

Shear buckling resistance - EN 1993-1-1, Clause 6.2.6(6)

As hw/tw > 72*ew (99.167 > 66.558), the web shear buckling resistance needs to be checked (EN 1993-1-5 Clause 5.2 and 5.3).

Buckling coefficient (Annex A)	kt=5.34+4*(hw/a)^2=7.6977
Modified slenderness λ	lamw=hw/(37.4*tw*ew*SQR(kt))=1.0338
Shear resistance of web	VplRd=2184.8 kN

Reduced design shear resistance at support (web contribution only will be considered):

VbwRd=chiw*fyw*hw*tw/(3^0.5*gamM1*1000)=1820.3 kN

Design shear at support VEd(0)=NbEd=1450 kN

As VEd(0) ≤ VbwRd (1450 kN ≤ 1820.3 kN), the shear force is less than the shear resistance. Hence section OK.

compute comp=eta1+(1-MfRd/MplRd)*(2*eta3 -1)^2=0.78202

As comp ≤ 1 (0.78202 ≤ 1), interaction equation is satisfied.

Intermediate transverse web stiffeners - Arrangement (1)

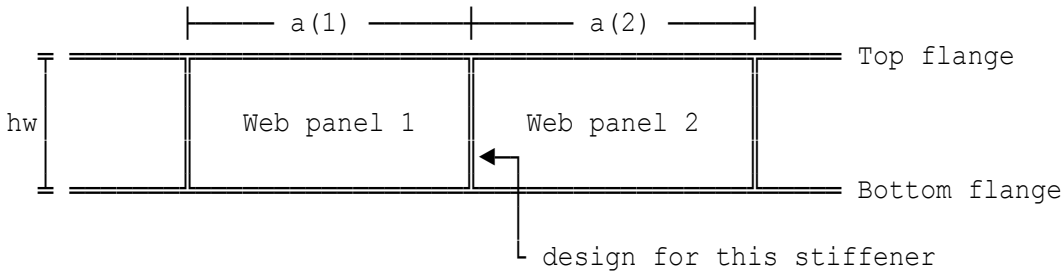

Elevation on web without longitudinal stiffening

Panel length 1 a(1)=5000 mm
Length of stiffener ls=1190 mm

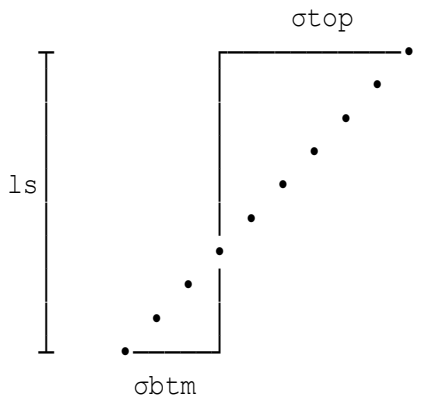

Longitudinal stresses in web with transverse stiffeners

ls=1190 mm

Compression stresses are positive

Stress at top of web plate (σtop) stop=230.45 N/mm²
Stress at btm of web plate (σbtm) sbtm=-230.45 N/mm²

Design parameters

Stiffener outstand hs1=150 mm
Stiffener thickness ts1=15 mm

Limiting outstand to prevent torsional buckling - Clause 9.2.1(8)

Yield strength to be adopted fy=275 N/mm²
Ratio (hs1/ts1) p=hs1/ts1=10
Limit to ratio p=(hs1/ts1) is 13ε=12.017.
Ratio (hs1/ts1)=10 is not greater than limit 13ε=12.017.
Stiffener complies with Clause 9.2.1(8).

Design shear resistance (single-sided transverse stiffener)

The effective cross section of the intermediate single-sided transverse stiffener is as shown below:

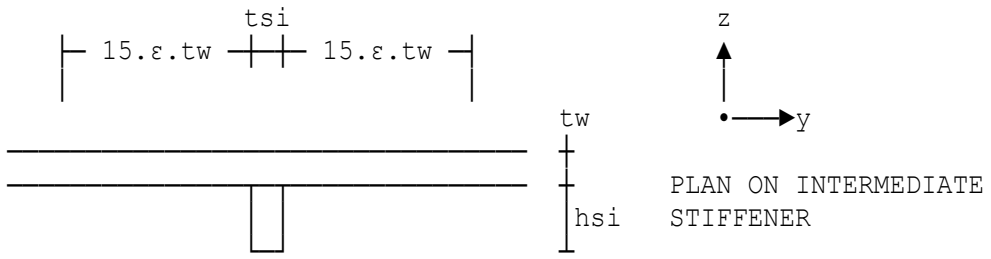

2nd moment of area yy axis Iyy=Ipro=13.86E6 mm⁴
Design shear resistance VbRd=chi*Ae*fyw/(gamM1*1000)=1747.2 kN

Axial force in the stiffener due to shear - BS EN 1993-1-5

Shear buckling coefficient for web panel kt is derived from Clause 5.2.
Buckling coefficient (Annex A) kt=5.34+4*(hw/a)^2=5.5666
Modified slenderness λw lamw=0.76*(fy/tcr)^0.5=1.2159
Max design shear force in panel VEd1=1200 kN
Externally applied design load Pext1=975 kN

Option 1:
Longitudinal compressive stress σxEd=0 for symmetrical sections.
Vertical force generated in stiffener arising from the shear induced tension field (see older version of NA to BS EN 1993-1-5:2006):
PEd1'=VEd1-hw*tw*0.8*tcr/1000=-27.358 kN

Option 2:
Vertical force generated in the stiffener as per BS EN 1993-1-5 (see NOTE, Clause 9.3.3(3)):
PEd1=VEd1-fyw*hw*tw/(SQR(3)*gamM1*lamw^2*1000)=-333.53 kN
Design axial load in stiffener PEd=PEd1+Pext1=975 kN
As PEd ≤ VbRd (975 kN ≤ 1747.2 kN), the design shear force does not exceed the shear resistance. Hence OK.

Connection to the web

Design shear load on weld FwEd=tw^2/(5*hs1)+PEd/(hw-2*snp)
=1.0325 kN/mm
Weld size provided sw1=6 mm

Stiffness check - Clause 9.3.3(3)

2nd moment of area (effe.section) Ipro=13.86E6 mm⁴
2nd moment of area required Ireq=0.75*hw*tw^3=1.5422E6 mm⁴
As Ireq ≤ Ipro (1.5422E6 mm⁴ ≤ 13.86E6 mm⁴), the stiffener is OK.

Web check between stiffeners

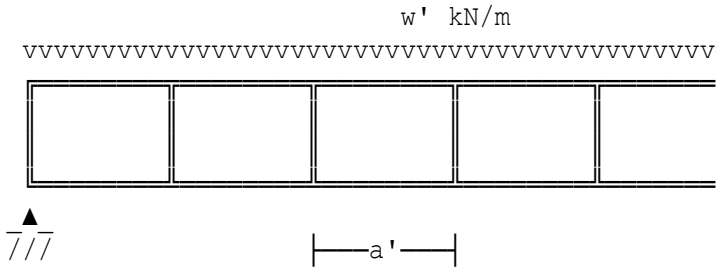

Girder assumed to have non-rigid end posts.

UDL applied between stiffeners w'=100 kN/m (factored load)
Largest panel length a'=5000 mm
Compressive stress of web sed=w'/tw=8.3333 N/mm²
Compressive strength of web fed=(2.75+2/(a'/hw)^2)*E/(C/tw)^2
=63.687 N/mm²
Since sed ≤ fed (8.3333 N/mm² ≤ 63.687 N/mm²), the web is OK.
Selected fillet weld size s=6 mm

Intermediate transverse web stiffeners - Arrangement (2)

Panel length 1 a(3)=4000 mm
Stiffener outstand hs2=100 mm
Stiffener thickness ts2=10 mm

Limiting outstand to prevent torsional buckling - Clause 9.2.1(8)

Yield strength to be adopted fy=275 N/mm²
Ratio (hs2/ts2) p=hs2/ts2=10
Limit to ratio p=(hs2/ts2) is 13ε=12.017.
Ratio (hs2/ts2)=10 is not greater than limit 13ε=12.017.
Stiffener complies with Clause 9.2.1(8).

Design shear resistance (single-sided transverse stiffener)

The effective cross section of the intermediate single-sided transverse stiffener is as shown below:

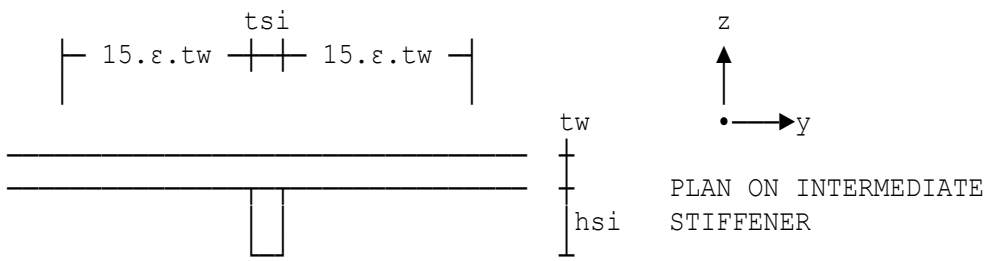

2nd moment of area yy axis Iyy=Ipro=3.4054E6 mm⁴
Design shear resistance VbRd=chi*Ae*fyw/(gamM1*1000)=1263 kN

Axial force in the stiffener due to shear

Max design shear force in panel	VEd2=1500 kN
Externally applied design load	Pext2=800 kN
Generated force to be adopted	PEd2=244.62 kN
Design axial load in stiffener	PEd'=PEd2+Pext2=1044.6 kN

As PEd' ≤ VbRd (1044.6 kN ≤ 1263 kN), the design shear force does not exceed the shear resistance. Hence OK.

Connection to the web

Design shear load on weld	FwEd=tw^2/(5*hs2)+PEd'/(hw-2*snp) =1.1885 kN/mm
Weld size provided	sw2=6 mm

Stiffness check - Clause 9.3.3(3)

2nd moment of area (eff.section)	Ipro=3.4054E6 mm⁴
2nd moment of area required	Ireq=0.75*hw*tw^3=1.5422E6 mm⁴

As Ireq ≤ Ipro (1.5422E6 mm⁴ ≤ 3.4054E6 mm⁴), the stiffener is OK.

DESIGN SUMMARY

Span of plate girder	**12 m**
Design moment	**2800 kNm**
All steel to be	**Grade S 275**

Intermediate stiffeners

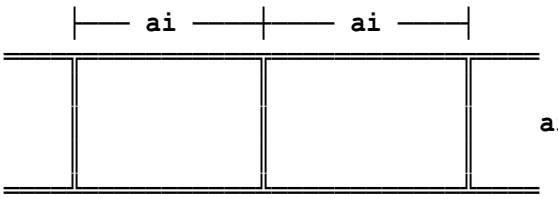

ai=5000 mm

Intermediate stiffeners:
Arrangement (1) **Single-sided stiffeners**
150 mm x 15 mm flats
spaced at 5000 mm centres

Intermediate stiffeners:
Arrangement (2) **Single-sided stiffeners**
100 mm x 10 mm flats
spaced at 4000 mm centres

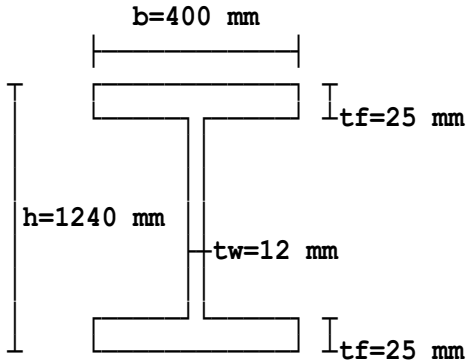

- **Fillet welds to be used for connecting stiffeners to girder web & flanges**
- **Weld sizes as detailed in calculations**
- **Weld design strength to be 222 N/mm²**

Assume non-rigid end posts to EN 1993-1-5, Figure 5.1 & Table 5.1.

Location: Ex1 - Based on Example 14 Guide to BS5950 - end bay

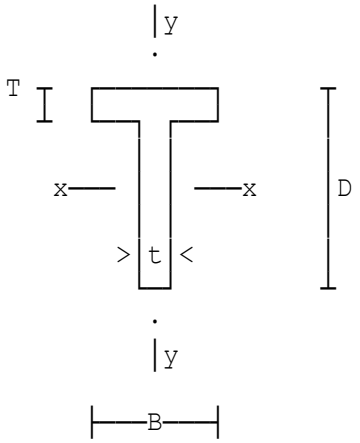

Design of Structural Tee

Calculations are in accordance with BS5950-1:2000.

All loads and moments are factored.

Factored moment about x-x axis	Mx=6 kNm
Factored axial load (+ comp)	Fax=200 kN
Factored shear force	Fv=22 kN
Length of member	L=2.83 m
146 x 127 x 22 UKB.	
Young's Modulus	E=205 kN/mm²
Length between restraints x-axis	Lx=2830 mm
Length between restraints y-axis	Ly=1780 mm
Length of beam between restraints	LT=1.05 m
Quarter point	mx2=0.5 kNm
Mid-span	mx3=3.2 kNm
Three quarter point	mx4=1.6 kNm
Maximum moment on central half	M24=4 kNm

DESIGN SUMMARY

Factored axial load	**200 kN**
Compress.resistance	**441.44 kN**
Local capacity check	**0.92394 ≤ 1**
Maximum moment	**6 kNm**
Moment capacity	**9.1171 kNm**
Buckling resistance	**9.1171 kNm**
Overall buckling chk.	**0.81831 ≤ 1**
	0.99157 ≤ 1

Location: Ex2 - Simply supported beam

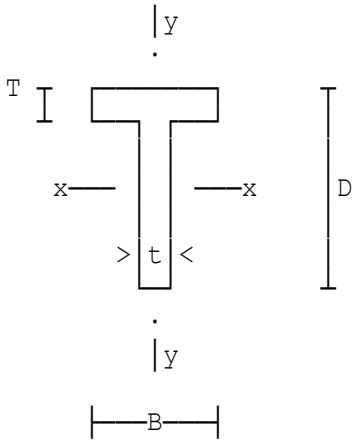

Design of Structural Tee

Calculations are in accordance with BS5950-1:2000.

All loads and moments are factored.

Length of member	L=4 m
Dead UDL (including S.W)	wd=8 kN/m
Imposed UDL	wi=6 kN/m
229 x 305 x 70 UKB.	
Young's Modulus	E=205 kN/mm²
Length of beam between restraints	LT=4 m

DESIGN SUMMARY	**Maximum moment**	**41.6 kNm**
	Moment capacity	**53.508 kNm**
	Buckling resistance	**53.508 kNm**

Location: Ex1 - Continuous tee beam

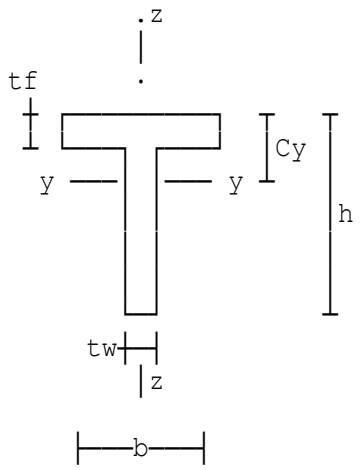

Design of Structural Tee

Calculations are in accordance with BS EN 2003-1-1:2005.

All loads and moments are factored.

Design moment about y-y axis	MyEd=6 kNm
Design shear force	VzEd=22 kN
Design axial load (+ comp)	NEd=200 kN
Length of member	L=2.83 m

146 x 127 x 22 Advance UKT split from Advance UKB

Length between restraints	LT=1.05 m
Far end bending moment	pM(1)=0 kNm
Far end bending moment	pM(2)=0 kNm

DESIGN SUMMARY

Design axial load	**200 kN**
Buckling resistance	**442.13 kN**
Maximum moment	**6 kNm**
Moment resistance	**9.1312 kNm**
Buckling resistance	**9.1312 kNm**
Interaction factors	**0.94519 ≤ 1**
	0.97251 ≤ 1

Location: Ex2 - Simply supported tee beam

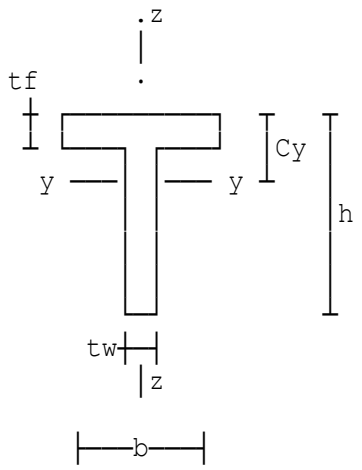

Design of Structural Tee

Calculations are in accordance with BS EN 2003-1-1:2005.

All loads and moments are factored.

Length of member L=4 m

Permanent UDL (including S.W) wd=8 kN/m
Variable UDL wi=6 kN/m
229 x 305 x 70 Advance UKT split from Advance UKB
Length between restraints LT=4 m

DESIGN SUMMARY	**Maximum moment**	**39.6 kNm**
	Moment resistance	**88.257 kNm**
	Buckling resistance	**88.257 kNm**
	Interaction factor	**0.44869 ≤ 1**

Location: Ex3 - Strut member

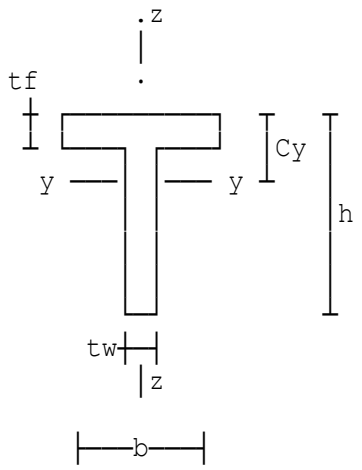

Design of Structural Tee

Calculations are in accordance with BS EN 2003-1-1:2005.

All loads and moments are factored.

Factored axial load (+ comp)	NEd=200 kN
Length of member	L=2.83 m

203 x 102 x 23 Advance UKT split from Advance UKC

DESIGN SUMMARY	**Design axial load**	**200 kN**
	Buckling resistance	**304.79 kN**
	Interaction factor	**0.65619 ≤ 1**

Location: Ex4 - Tie member with no moment

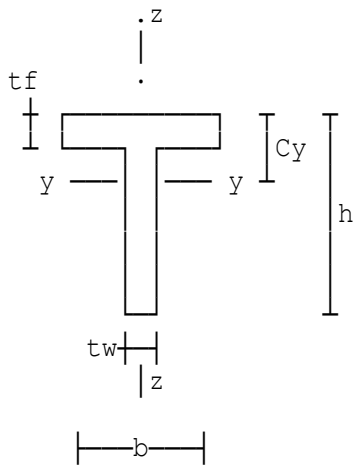

Design of Structural Tee

Calculations are in accordance with BS EN 2003-1-1:2005.

All loads and moments are factored.

Factored axial load (+ comp)	NEd=-200 kN
Design moment about y-y axis	MyEd=0 kNm
Length of member	L=2.83 m

146 x 127 x 22 Advance UKT split from Advance UKB
Estimated net area (tension) Ae=26 cm²

DESIGN SUMMARY	**Design axial load**	**-200 kN**
	Tension resistance	**715 kN**
	Interaction factor	**0.27972 ≤ 1**

Location: Ex4 - Tie member with moment

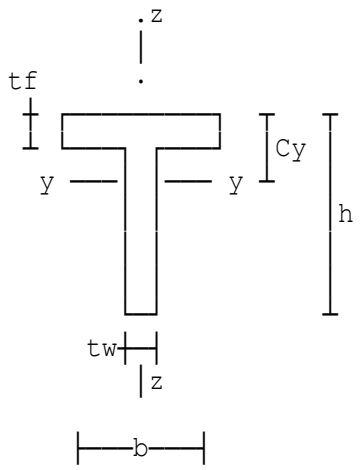

Design of Structural Tee

Calculations are in accordance with BS EN 2003-1-1:2005.

All loads and moments are factored.

Factored axial load (+ comp)	NEd=-200 kN
Design moment about y-y axis	MyEd=5 kNm
Length of member	L=2.83 m

146 x 127 x 22 Advance UKT split from Advance UKB
Estimated net area (tension) Ae=26 cm²

DESIGN SUMMARY	**Design axial load**	**-200 kN**
	Tension resistance	**715 kN**
	Interaction factor	**0.8273 ≤ 1**

Location: Ex6 - Continuous tee beam cut from UC section

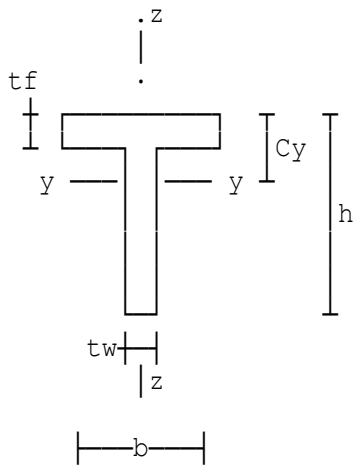

Design of Structural Tee

Calculations are in accordance with BS EN 2003-1-1:2005.

All loads and moments are factored.

Design moment about y-y axis	MyEd=6 kNm
Design shear force	VzEd=22 kN
Design axial load (+ comp)	NEd=200 kN
Length of member	L=2.83 m

254 x 127 x 37 Advance UKT split from Advance UKC

Length between restraints	LT=1.05 m
Far end bending moment	pM(1)=0 kNm
Far end bending moment	pM(2)=0 kNm

DESIGN SUMMARY

Design axial load	**200 kN**
Buckling resistance	**627.06 kN**
Maximum moment	**6 kNm**
Moment resistance	**10.768 kNm**
Buckling resistance	**10.768 kNm**
Interaction factors	**0.71727 ≤ 1**
	0.70969 ≤ 1

Location: Example 15, 'Steelwork Design Guide'

Simply Supported Crane Gantry Girder

Calculations are in accordance with BS5950-1:2000 and 'Steelwork Design Guide to BS5950' published by The Steel Construction Institute. The beam is assumed to be a rolled universal section.

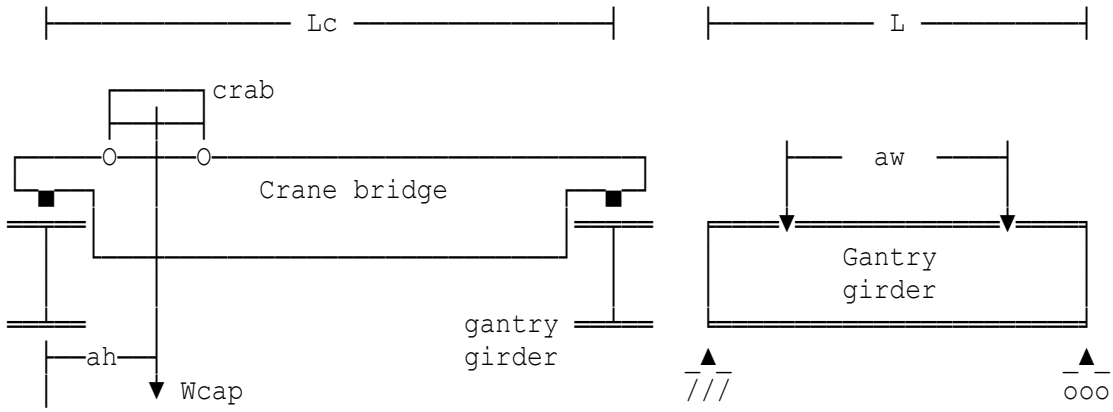

Crane capacity	Wcap=100 kN
Weight of crab	Wcb=20 kN
Weight of crane bridge	Wc=80 kN
Self weight of gantry girder	WG=15 kN
Span of crane bridge	Lc=15 m
Wheel spacing in end carriage	aw=4 m
Minimum hook approach	ah=1 m
Span of gantry girder	L=8 m
Impact factor	Impfac=1.3
610 x 229 x 125 UB.	
Modulus of elasticity	E=205 kN/mm²
Weld leg length	s=6 mm
Assumed rail height	Hr=100 mm
Force applied through flange	Fbw=247.62 kN
Stiff bearing length	b1=75 mm
Distance to nearer end	be=0 mm
Distance to nearer end of member	ae=35 mm

UNIVERSAL BEAM	**610 x 229 x 125 UB Grade S 275**	
	with top plate 300 mm x 15 mm	
	connected together by 6 mm weld	
DESIGN	**Max. vertical moment**	**376.68 kNm**
SUMMARY	**Buckling resistance**	**658.77 kNm**
	Max. horizontal moment	**22.8 kNm**
	Moment capacity flange	**74.25 kNm**
	Unity check	**0.85462**
		0.68188
	Max. shear	**247.62 kN**
	Shear capacity	**1158.3 kN**
	Vertical deflection	**4.0852 mm**
	Limiting deflection	**13.333 mm**
	Surge deflection	**6.3595 mm**
	Limiting deflection	**16 mm**

Applied flange force	**247.62 kN**
Local web capacity	**456.84 kN**
Web buckling capacity	**273.24 kN**

Location: Example using parallel flange channel section

Simply Supported Crane Gantry Girder

Calculations are in accordance with BS5950-1:2000 and 'Steelwork Design Guide to BS5950' published by The Steel Construction Institute. The beam is assumed to be a rolled universal section.

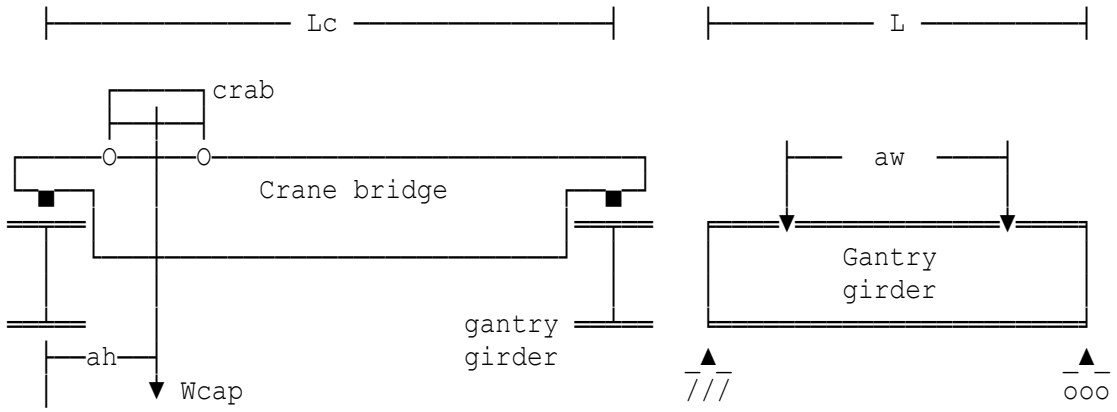

Crane capacity	Wcap=100 kN
Weight of crab	Wcb=20 kN
Weight of crane bridge	Wc=80 kN
Self weight of gantry girder	WG=15 kN
Span of crane bridge	Lc=15 m
Wheel spacing in end carriage	aw=4 m
Minimum hook approach	ah=1 m
Span of gantry girder	L=8 m
Impact factor	Impfac=1.3
610 x 229 x 125 UB.	
380 x 100 Parallel Flange Channel.	
Modulus of elasticity	E=205 kN/mm²
Weld leg length	s=6 mm
Assumed rail height	Hr=100 mm

UNIVERSAL BEAM	**610 x 229 x 125 UB Grade S 275**	
	with 380 x 100	
	Parallel Flange Channel	
	connected together by 6 mm weld	
DESIGN	**Max. vertical moment**	**376.68 kNm**
SUMMARY	**Buckling resistance**	**930.74 kNm**
	Max. horizontal moment	**22.8 kNm**
	Moment capacity flange	**247.25 kNm**
	Unity check	**0.461**
		0.45842
	Max. shear	**247.62 kN**
	Shear capacity	**1158.3 kN**
	Vertical deflection	**3.9133 mm**
	Limiting deflection	**13.333 mm**
	Surge deflection	**1.4309 mm**
	Limiting deflection	**16 mm**

Location: Example using UB only

Simply Supported Crane Gantry Girder

Calculations are in accordance with BS5950-1:2000 and 'Steelwork Design Guide to BS5950' published by The Steel Construction Institute. The beam is assumed to be a rolled universal section.

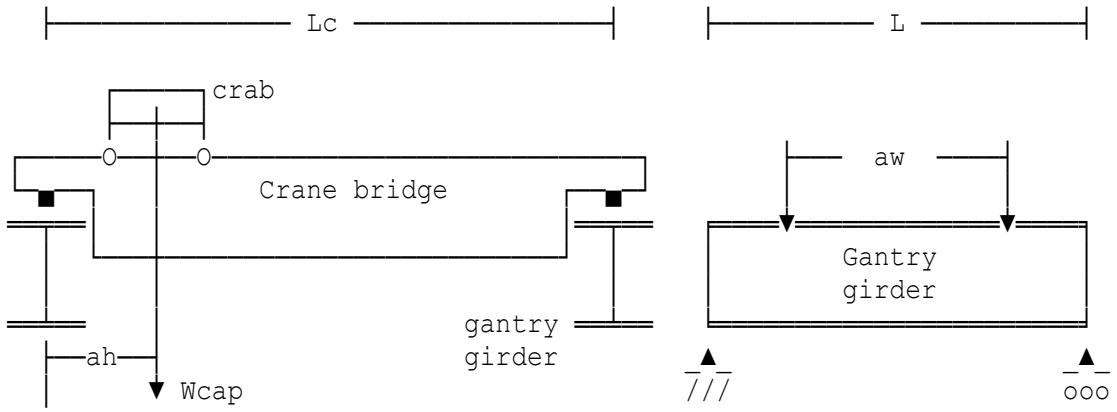

Crane capacity	Wcap=80 kN
Weight of crab	Wcb=16 kN
Weight of crane bridge	Wc=70 kN
Self weight of gantry girder	WG=12 kN
Span of crane bridge	Lc=12 m
Wheel spacing in end carriage	aw=3 m
Minimum hook approach	ah=1 m
Span of gantry girder	L=8 m
Impact factor	Impfac=1.1
610 x 229 x 125 UB.	
Modulus of elasticity	E=205 kN/mm²
Assumed rail height	Hr=110 mm
Force applied through flange	Fbw=184.29 kN
Stiff bearing length	b1=80 mm
Distance to nearer end	be=0 mm
Distance to nearer end of member	ae=30 mm

UNIVERSAL BEAM	**610 x 229 x 125 UB Grade S 275**	
DESIGN	**Max. vertical moment**	**302.62 kNm**
SUMMARY	**Buckling resistance**	**361.82 kNm**
	Max. horizontal moment	**5.07 kNm**
	Moment capacity flange	**54.476 kNm**
	Unity check	**0.876**
		0.42761
	Max. shear	**184.29 kN**
	Shear capacity	**1158.3 kN**
	Vertical deflection	**5.2928 mm**
	Limiting deflection	**13.333 mm**
	Surge deflection	**10.383 mm**
	Limiting deflection	**16 mm**
	Applied flange force	**184.29 kN**
	Local web capacity	**473.2 kN**
	Web buckling capacity	**192.33 kN**

Location: Ex1 - Using an I-beam section

Simply supported crane gantry girder

Calculations are in accordance with EC3 Part 1-1 and Part 6. The beam is assumed to be a rolled universal section.

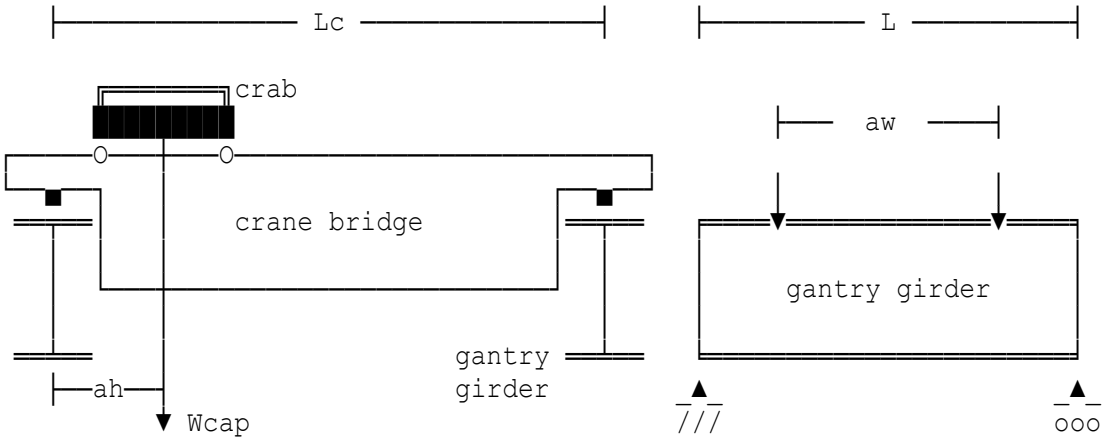

Crane capacity	Wcap=100 kN
Weight of crab	Wcb=20 kN
Weight of crane bridge	Wc=80 kN
Self weight of gantry girder	WG=15 kN
Span of crane bridge	Lc=15 m
Wheel spacing in end carriage	aw=4 m
Minimum hook approach	ah=1 m
Span of gantry girder	L=8 m
Dynamic magnification factor	impfac=1.3
Partial factor (permanent action)	gamG=1.35
Partial factor (variable action)	gamQ=1.5
610 x 229 x 125 UKB	
Correction factor	kc=1
Weld leg length	s=6 mm
Assumed rail height	Hr=100 mm
Stiff bearing length	ss=75 mm
Stiff bearing position	C=0 mm

UNIVERSAL BEAM	**610 x 229 x 125 UB Grade S 275**
DESIGN SUMMARY	**with top plate 300 mm x 15 mm**
	connected together by 6 mm FW
	Design vertical moment 353.7 kNm
	Buckling resistance 674.48 kNm
	Design horiz.moment 21.375 kNm
	Flange moment resist. 61.875 kNm
	Design shear force 232.43 kN
	Design shear resistance 1171.1 kN
	Vertical deflection 3.9879 mm
	Limiting deflection 13.333 mm
	Surge deflection 6.2081 mm
	Limiting deflection 16 mm
	Support shear force 232.43 kN
	Web bear.& buckl.res 485.54 kN

Interaction factors	**0.86986 ≤ 1**
	0.72177 ≤ 1
	0.42883 ≤ 1

Location: Ex2 - Using parallel flange channel section

Simply supported crane gantry girder

Calculations are in accordance with EC3 Part 1-1 and Part 6. The beam is assumed to be a rolled universal section.

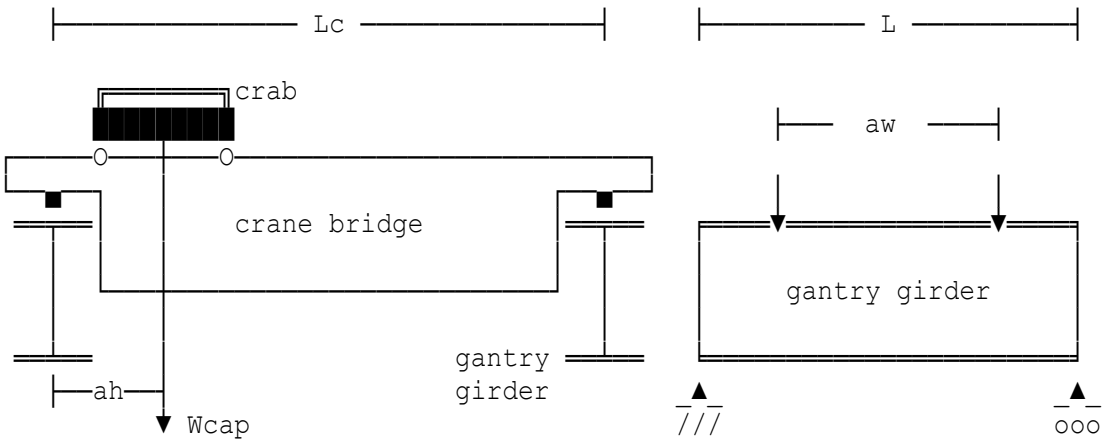

Crane capacity	Wcap=100 kN
Weight of crab	Wcb=20 kN
Weight of crane bridge	Wc=80 kN
Self weight of gantry girder	WG=15 kN
Span of crane bridge	Lc=15 m
Wheel spacing in end carriage	aw=4 m
Minimum hook approach	ah=1 m
Span of gantry girder	L=8 m
Dynamic magnification factor	impfac=1.3
Partial factor (permanent action)	gamG=1.35
Partial factor (variable action)	gamQ=1.5
610 x 229 x 125 UKB	
380 x 100 UKPFC	
Correction factor	kc=1
Weld leg length	s=6 mm
Assumed rail height	Hr=100 mm

UNIVERSAL BEAM	**610 x 229 x 125 UB Grade S 275**
DESIGN SUMMARY	**with 380 x 100**
	Parallel Flange Channel
	connected together by 6 mm FW
	Design vertical moment 353.7 kNm
	Buckling resistance 852.09 kNm
	Design horiz.moment 21.375 kNm
	Flange moment resist. 236.62 kNm
	Design shear force 232.43 kN
	Design shear resistance 1171.1 kN
	Vertical deflection 3.8201 mm
	Limiting deflection 13.333 mm
	Surge deflection 1.3968 mm
	Limiting deflection 16 mm
	Interaction factors 0.50543 ≤ 1
	0.46775 ≤ 1
	0.17257 ≤ 1

Location: Ex3 - Using UB only

Simply supported crane gantry girder

Calculations are in accordance with EC3 Part 1-1 and Part 6. The beam is assumed to be a rolled universal section.

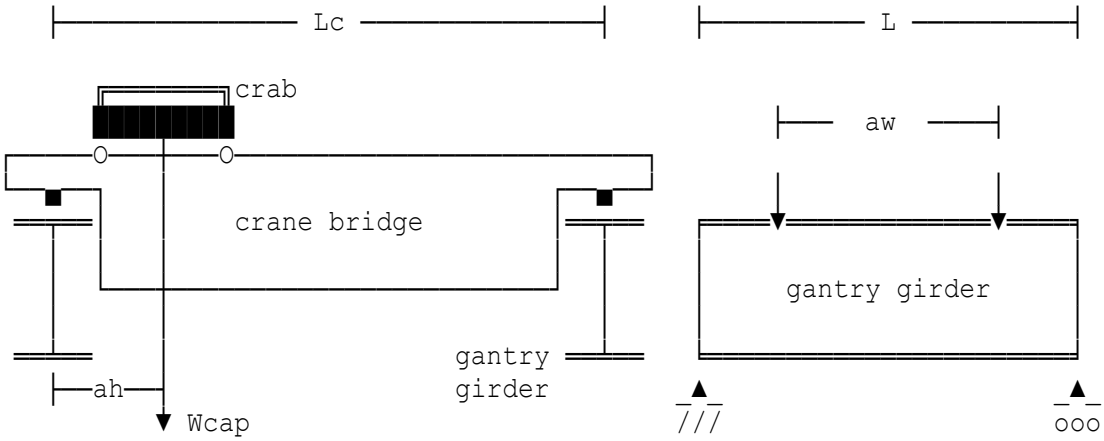

Crane capacity	Wcap=80 kN
Weight of crab	Wcb=16 kN
Weight of crane bridge	Wc=70 kN
Self weight of gantry girder	WG=12 kN
Span of crane bridge	Lc=12 m
Wheel spacing in end carriage	aw=3 m
Minimum hook approach	ah=1 m
Span of gantry girder	L=8 m
Dynamic magnification factor	impfac=1.1
Partial factor (permanent action)	gamG=1.35
Partial factor (variable action)	gamQ=1.5
610 x 229 x 125 UKB	
Correction factor	kc=1
Assumed rail height	Hr=110 mm
Stiff bearing length	ss=80 mm
Stiff bearing position	C=0 mm

UNIVERSAL BEAM	**610 x 229 x 125 UB Grade S 275**	
DESIGN SUMMARY	**Design vertical moment**	**284.16 kNm**
	Buckling resistance	**447.64 kNm**
	Design horiz.moment	**4.7531 kNm**
	Flange moment resist.	**45.396 kNm**
	Design shear force	**173 kN**
	Design shear resistance	**1171.1 kN**
	Vertical deflection	**5.1668 mm**
	Limiting deflection	**13.333 mm**
	Surge deflection	**10.136 mm**
	Limiting deflection	**16 mm**
	Support shear force	**173 kN**
	Web bear.& buckl.res	**496.39 kN**
	Interaction factors	**0.73949 ≤ 1**
		0.43759 ≤ 1
		0.18961 ≤ 1

Location: Ex1 - Internal column example based on SCI publication

Wind-moment design of low rise frames

Calculations are in accordance with BS5950 and SCI publication P-263 entitled ' Wind-moment Design of Low Rise Frames '. The wind-moment design method will be adopted here which applies to low rise frames of four storeys or less and assumes that:

- under vertical loads the connections act as simple nominally pinned connections
- under wind loads the connections behave as nominally rigid joints. Points of contraflexure are assumed to occur at the mid-height of the columns and the mid-length of the beams
- with the wind-moment design method the end-plate connections should be sufficiently ductile to accommodate large rotations. Connections are required to resist the moments due to wind loading as well as the shear forces due to vertical loading
- typical connections with sufficient ductility are given in in the BCSA/SCI publication 'Joints in steel construction: Moment connections'. Capacity tables have been reproduced in Appendix D of SCI-P-263
- second order effects due to frame sway (i.e. P-Δ effects) are allowed for by using effective lengths for the columns that are greater than the lengths between floor levels
- columns should be rigidly connected to the foundations, by bases that are designed to resist moments
- any recognised method could be used to determine the sway deflections (see design summary). Sway deflections in each storey should be within the limit of Height/300.

Frame dimensions - Table 1.1 SCI-P-263

Number of storeys	storey=4
Number of bays	bay=4
Storey height (bottom storey)	Ht=5 m
Storey height (elsewhere)	ht=4 m
Parapet height	hp=1.55 m
Frame centres	crs=6 m
Number of frames	no=9

Bay widths

Width of bay 1	L1=6 m
Width of bay 2	L2=6 m
Width of bay 3	L3=6 m
Width of bay 4	L4=6 m

Loading

Dead load on floors deadf=4.5 kN/m²
Imposed load on floors impf=5 kN/m²
Dead load on roof deadr=4 kN/m²
Imposed load on roof impr=1.5 kN/m²

Dynamic augmentation factor

Chosen site is the Town; built up areas with an average level of roof tops at least Ho=5.0 m above ground level.
The building needs to consider the effects of obstruction height and other buildings proximity.

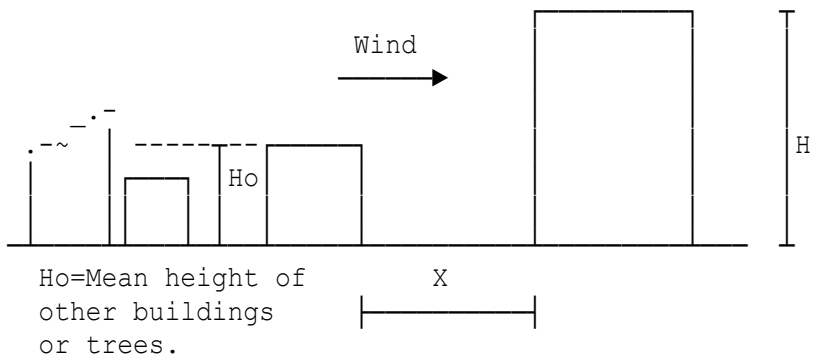

Distance to next building X=8 m
Average adjacent building height Ho=15 m
Dynamic Augmentation Factor Cr=(Kb*(H/ho)^0.75)/800/lh=0.0277
Since Dynamic Augmentation Factor Cr is less than or equal to 0.25 then this structure is not dynamic.

Standard wind loads

Basic wind speed Vb=20 m/s
Site altitude above mean sea level deltaS=112 m
Directional factor Sd=1
Probability factor Sp=1
From Table 4 terrain & building factor Sb=1.55
Site wind speed @ height He Vs=Vb*Sa*Sd*Ss*Sp=22.24 m/s

DESIGN SUMMARY	**Effective height**	**He 7.42 m**
	Altitude factor	**Sa 1.112**
	Direction factor	**Sd 1**
	Seasonal factor	**Ss 1**
	Probability factor	**Sp 1**
	Dynamic wind pressure	**qs 0.7284 kN/m²**

I-column design

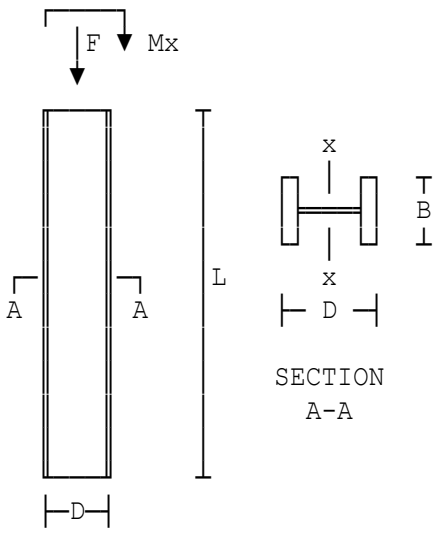

Section suitability based on the following loading combinations:

- 1.4(DL) + 1.6(LL) + 1.0(NHF)
- 1.2(DL + LL + WL)
- 1.4(DL + WL)

The effects of patterned loading variations in beam spans and column S.W are ignored.
Loads and moments considered are: Beam loading, moment due to rigid column/beam connection, moment due to beam eccentricity, and moment due to NHF where applicable.

254 x 254 x 89 UC.
Young's Modulus E=205 kN/mm²

UNIVERSAL COLUMN	**254 x 254 x 89 UC Grade S 275**	
	Axial load	**1548 kN**
DESIGN	**Compressive resist.**	**1857 kN**
SUMMARY	**Design moment**	**52.61 kNm**
	Moment capacity	**314.7 kNm**
	Unity factor (d+i)	**0.9061 ≤ 1**
	Unity factor (d+i+w)	**0.843 ≤ 1**
	Unity factor (d+w)	**0.6699 ≤ 1**

Floor beam design

Beam span Lb=6 m

Design dead plus imposed loading

Distributed floor load w'=(1.4*deadf+1.6*impf)*crs=85.8 kN/m
Assume the end restraint moment due to gravity load is equal to 10% of the "free" moment.
Design moment M=0.9*w'*Lb^2/8=347.5 kNm
Design shear force Fv=w'*Lb/2=257.4 kN

Section properties

406 x 178 x 74 UB.
Dimensions (mm): D=412.8 B=179.5 t=9.5 T=16 r=10.2
Properties (cm): Ix=27300 Iy=1550 Sx=1500 J=62.8 A=94.5

Strength of steel - Clause 3.1.1

For material thickness 16 mm and steel grade S 275.
Design strength py=275 N/mm²

Check section for moment and shear

Shear capacity Pv=0.6*py*Av/10^3=647.1 kN
Design shear force Fv=257.4 kN
Moment capacity for compact sec Mc=0.9*py*Sx/10^3=371.3 kNm
Mc is within limiting value, therefore no reduction.
Since M ≤ Mc (347.5 kNm ≤ 371.3 kNm), design moment within moment capacity.

Check for deflection

UDL for deflection calculation wu=impf*crs=30 kN/m
Total deflection DEL=(5*wu*Lb^4/384)*10^5/(E*Ix)
=9.046 mm
Limiting deflection DELlim=Lb*10^3/360=16.67 mm
Since DEL ≤ DELlim (9.046 mm ≤ 16.67 mm), deflection is within the limiting value.

UNIVERSAL BEAM	**406 x 178 x 74 UB Grade S 275**	
	Design shear force	**257.4 kN**
DESIGN	**Shear capacity**	**647.1 kN**
SUMMARY	**Design moment**	**347.5 kNm**
	Moment capacity	**371.3 kNm**
	Deflection	**9.046 mm**
	Limiting deflection	**16.67 mm**

The frame should now be checked for sidesway using unfactored wind loads only and rigidly connected columns to the foundations. The calculated rigid frame deflections should then be increased by 50% (i.e. multiplied by a factor of 1.5) to allow for the flexibility of standard wind-moment connections (provided that the average bay width is at least 6.0 m). For an average bay width of 4.5 m, the deflections from the rigid frame analysis should be multiplied by a factor of 2.0. For bay widths between 4.5 m and 6.0 m, linear interpolation between 2.0 and 1.5 should be used. If the increased values are acceptable, then the design is considered complete.

Location: Ex2 - End column

Wind-moment design of low rise frames

Calculations are in accordance with BS5950 and SCI publication P-263 entitled ' Wind-moment Design of Low Rise Frames '. The wind-moment design method will be adopted here which applies to low rise frames of four storeys or less and assumes that:

- under vertical loads the connections act as simple nominally pinned connections
- under wind loads the connections behave as nominally rigid joints. Points of contraflexure are assumed to occur at the mid-height of the columns and the mid-length of the beams
- with the wind-moment design method the end-plate connections should be sufficiently ductile to accommodate large rotations. Connections are required to resist the moments due to wind loading as well as the shear forces due to vertical loading
- typical connections with sufficient ductility are given in in the BCSA/SCI publication 'Joints in steel construction: Moment connections'. Capacity tables have been reproduced in Appendix D of SCI-P-263
- second order effects due to frame sway (i.e. P-Δ effects) are allowed for by using effective lengths for the columns that are greater than the lengths between floor levels
- columns should be rigidly connected to the foundations, by bases that are designed to resist moments
- any recognised method could be used to determine the sway deflections (see design summary). Sway deflections in each storey should be within the limit of Height/300.

Frame dimensions - Table 1.1 SCI-P-263

Number of storeys	storey=4
Number of bays	bay=4
Storey height (bottom storey)	Ht=5 m
Storey height (elsewhere)	ht=4 m
Parapet height	hp=1.55 m
Frame centres	crs=6 m
Number of frames	no=9

Bay widths

Width of bay 1	L1=6 m
Width of bay 2	L2=6 m
Width of bay 3	L3=6 m
Width of bay 4	L4=6 m

Loading

Dead load on floors deadf=4.5 kN/m²
Imposed load on floors impf=5 kN/m²
Dead load on roof deadr=4 kN/m²
Imposed load on roof impr=1.5 kN/m²

Dynamic augmentation factor

Chosen site is the Town; built up areas with an average level of roof tops at least Ho=5.0 m above ground level.
The building needs to consider the effects of obstruction height and other buildings proximity.

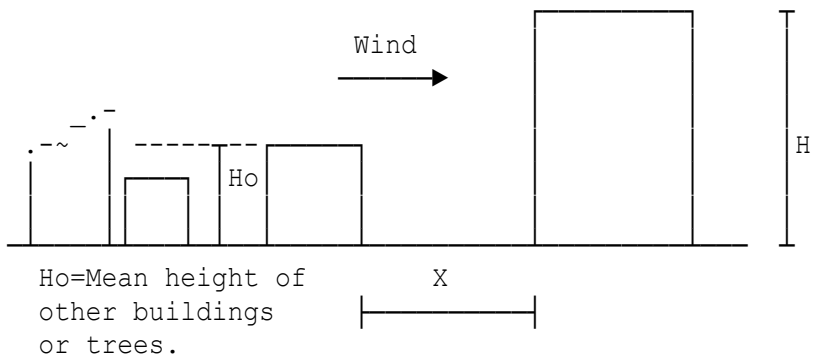

Distance to next building X=8 m
Average adjacent building height Ho=15 m
Dynamic Augmentation Factor Cr=(Kb*(H/ho)^0.75)/800/lh=0.0277
Since Dynamic Augmentation Factor Cr is less than or equal to 0.25 then this structure is not dynamic.

Standard wind loads

Basic wind speed Vb=20 m/s
Site altitude above mean sea level deltaS=112 m
Directional factor Sd=1
Probability factor Sp=1
From Table 4 terrain & building factor Sb=1.55
Site wind speed @ height He Vs=Vb*Sa*Sd*Ss*Sp=22.24 m/s

DESIGN SUMMARY	**Effective height**	**He 7.42 m**
	Altitude factor	**Sa 1.112**
	Direction factor	**Sd 1**
	Seasonal factor	**Ss 1**
	Probability factor	**Sp 1**
	Dynamic wind pressure	**qs 0.7284 kN/m²**

I-column design

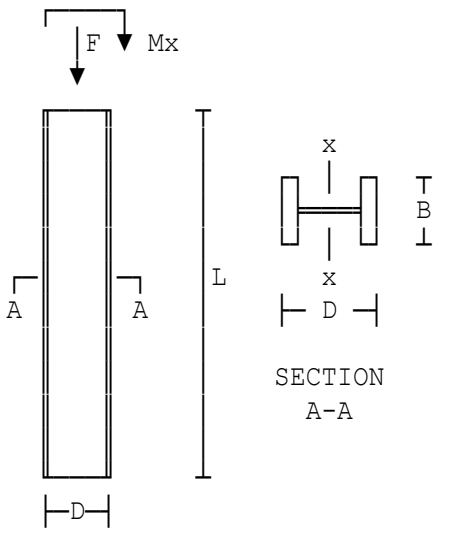

Section suitability based on the following loading combinations:

- 1.4(DL) + 1.6(LL) + 1.0(NHF)
- 1.2(DL + LL + WL)
- 1.4(DL + WL)

The effects of patterned loading variations in beam spans and column S.W are ignored.
Loads and moments considered are: Beam loading, moment due to rigid column/beam connection, moment due to beam eccentricity, and moment due to NHF where applicable.

Assumed depth of col. section Dp=260 mm
254 x 254 x 89 UC.
Young's Modulus E=205 kN/mm²

UNIVERSAL COLUMN	**254 x 254 x 89 UC Grade S 275**	
	Axial load	**773.8 kN**
DESIGN	**Compressive resist.**	**1857 kN**
SUMMARY	**Design moment**	**65.29 kNm**
	Moment capacity	**314.7 kNm**
	Unity factor (d+i)	**0.6084 ≤ 1**
	Unity factor (d+i+w)	**0.5608 ≤ 1**
	Unity factor (d+w)	**0.4898 ≤ 1**

Floor beam design

Beam span Lb=6 m

Design dead plus imposed loading

Distributed floor load w'=(1.4*deadf+1.6*impf)*crs=85.8 kN/m
Assume the end restraint moment due to gravity load is equal to 10% of the "free" moment.
Design moment M=0.9*w'*Lb^2/8=347.5 kNm
Design shear force Fv=w'*Lb/2=257.4 kN

Section properties

406 x 178 x 74 UB.
Dimensions (mm): D=412.8 B=179.5 t=9.5 T=16 r=10.2
Properties (cm): Ix=27300 Iy=1550 Sx=1500 J=62.8 A=94.5

Strength of steel - Clause 3.1.1

For material thickness 16 mm and steel grade S 275.
Design strength py=275 N/mm²

Check section for moment and shear

Shear capacity Pv=0.6*py*Av/10^3=647.1 kN
Design shear force Fv=257.4 kN
Moment capacity for compact sec Mc=0.9*py*Sx/10^3=371.3 kNm
Mc is within limiting value, therefore no reduction.
Since M ≤ Mc (347.5 kNm ≤ 371.3 kNm), design moment within moment capacity.

Check for deflection

UDL for deflection calculation wu=impf*crs=30 kN/m
Total deflection DEL=(5*wu*Lb^4/384)*10^5/(E*Ix)
=9.046 mm
Limiting deflection DELlim=Lb*10^3/360=16.67 mm
Since DEL ≤ DELlim (9.046 mm ≤ 16.67 mm), deflection is within the limiting value.

UNIVERSAL BEAM	**406 x 178 x 74 UB Grade S 275**	
	Design shear force	**257.4 kN**
DESIGN	**Shear capacity**	**647.1 kN**
SUMMARY	**Design moment**	**347.5 kNm**
	Moment capacity	**371.3 kNm**
	Deflection	**9.046 mm**
	Limiting deflection	**16.67 mm**

The frame should now be checked for sidesway using unfactored wind loads only and rigidly connected columns to the foundations. The calculated rigid frame deflections should then be increased by 50% (i.e. multiplied by a factor of 1.5) to allow for the flexibility of standard wind-moment connections (provided that the average bay width is at least 6.0 m). For an average bay width of 4.5 m, the deflections from the rigid frame analysis should be multiplied by a factor of 2.0. For bay widths between 4.5 m and 6.0 m, linear interpolation between 2.0 and 1.5 should be used. If the increased values are acceptable, then the design is considered complete.

Location: Ex1 - Internal column

Wind-moment design of low rise frames

Calculations are in accordance with EN 1993-1-1:2005 and publication SCI-P-263 entitled ' Wind-moment Design of Low Rise Frames '. The wind-moment design method will be adopted here which applies to low rise frames of four storeys or less and assumes that:

- under vertical loads the connections act as simple nominally pinned connections
- under wind loads the connections behave as nominally rigid joints. Points of contraflexure are assumed to occur at the mid-height of the columns and the mid-length of the beams
- with the wind-moment design method the end-plate connections should be sufficiently ductile to accommodate large rotations. Connections are required to resist the moments due to wind loading as well as the shear forces due to vertical loading
- typical connections with sufficient ductility are given in in the BCSA/SCI publication 'Joints in steel construction: Moment connections'. Capacity tables have been reproduced in Appendix D of SCI-P-263
- second order effects due to frame sway (i.e. P-Δ effects) are allowed for by using effective lengths for the columns that are greater than the lengths between floor levels
- columns should be rigidly connected to the foundations, by bases that are designed to resist moments
- any recognised method could be used to determine the sway deflections (see design summary). Sway deflections in each storey should be within the limit of Height/300.

Frame dimensions - Table 1.1 SCI-P-263

Number of storeys	storey=4
Number of bays	bay=4
Storey height (bottom storey)	Ht=5 m
Storey height (elsewhere)	ht=4 m
Parapet height	hp=1.55 m
Frame centres	crs=6 m
Number of frames	no=9

Bay widths

Width of bay 1	L1=6 m
Width of bay 2	L2=6 m
Width of bay 3	L3=6 m
Width of bay 4	L4=6 m

Loading

Permanent load on floors	Gkf=4.5 kN/m²
Imposed load on floors	Qkf=5 kN/m²
Permanent load on roof	Gkr=4 kN/m²
Imposed load on roof	Qkr=1.5 kN/m²

Obstruction height and upwind spacing

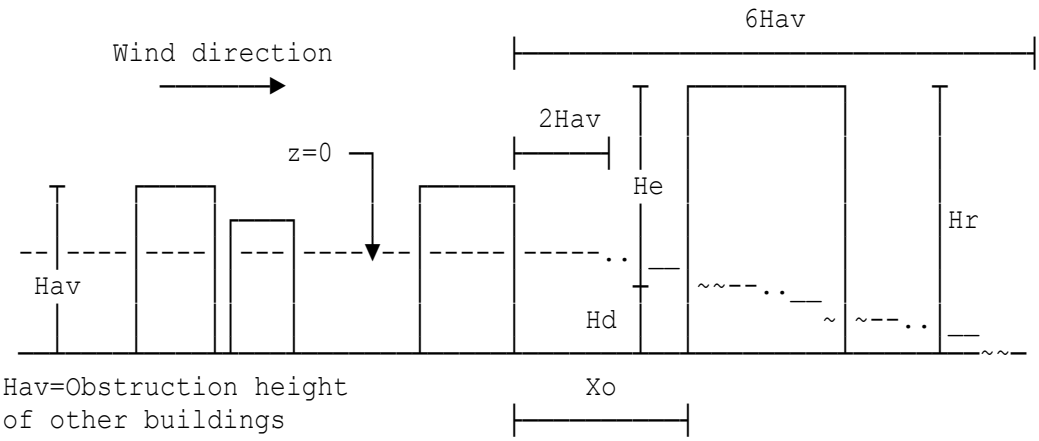

Hav=Obstruction height of other buildings

Building reference height	Hr=18.55 m
buildings upwind of site	Hav=0.001 m
Upwind spacing of building	Xo=20 m
Displacement height (wind θ=0°)	Hd(0)=3.8 m
Displacement height (wind θ=90°)	Hd(90)=3.8 m
Building height	H=18.55 m

Standard wind loads

Basic wind velocity (Fig. NA.1)	Vbmap=21.5 m/s
Altitude above mean sea level	Asite=25 m
Directional factor (wind θ=0°)	Cdi(0)=1
Directional factor (wind θ=90°)	Cdi(90)=0.73
Distance upwind to shoreline	Dis(0)=2.5 km
Distance inside town terrain	Dit(0)=2.5 km
Distance upwind to shoreline	Dis(90)=2.5 km
Distance inside town terrain	Dit(90)=2.5 km
Probability factor	Cp=1

	Effective height (long face)	**He(0)**	**14.75 m**
	Effective height (short face)	**He(90)**	**14.75 m**
	Altitude factor (long face)	**Ca(0)**	**1.025**
DESIGN	**Altitude factor (short face)**	**Ca(90)**	**1.025**
SUMMARY	**Direction factor (long face)**	**Cdi(0)**	**1**
	Direction factor (short face)	**Cdi(90)**	**0.73**
	Seasonal factor	**Cseason**	**1**
	Probability factor	**Cp**	**1**
	Long face peak velocity pressure	**qp(0)**	**0.7823 kN/m²**
	Short face peak velocity pressure	**qp(90)**	**0.4169 kN/m²**

Partial factors for actions

Factor for permanent actions gamG=1.25
Factor for imposed actions gamQ=1.5

Column design

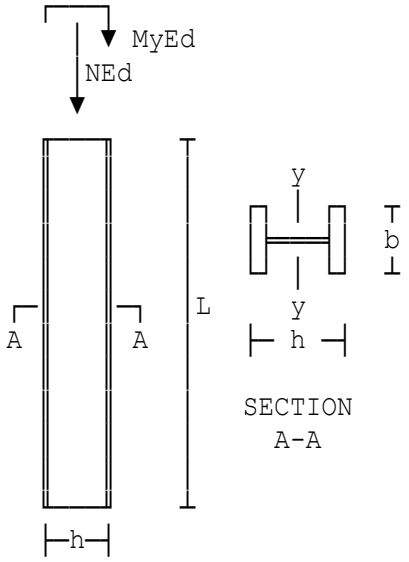

Section suitability will be based on the following three loading combinations:

Comb1: 1.25(Gk)+1.5(Qk)+1.0(EHF)
Comb2: 1.25(Gk)+1.5(Qk)+0.75(Wk)+1.0(EHF)
Comb3: 1.25(Gk)+1.5(Wk)+1.05(Qk)+1.0(EHF)

The effects of patterned loading and variations in beam spans and S.W of column will be ignored.

Loads/moments considered are:
- Beam loading and moment due to rigid column/beam connection
- Moment due to beam eccentricity and moment due to equivalent horizontal forces (EHF).

Factor ψo for imposed psi0i=0.7
Factor ψo for wind psi0w=0.5
254 x 254 x 89 UKC
Young's Modulus E=210 kN/mm²

UNIVERSAL COLUMN	**254 x 254 x 89 UKC Grade S 275**	
	Design axial load	**1412 kN**
DESIGN	**Buckling resist.**	**1866 kN**
SUMMARY	**Design moment**	**56.29 kNm**
	Moment resistance	**288.4 kNm**
	Unity factor Comb1	**0.829 ≤ 1**
	Unity factor Comb2	**0.9514 ≤ 1**
	Unity factor Comb3	**0.9736 ≤ 1**

Floor beam design

Beam span Lb=6 m

Design permanent plus imposed loading

Distributed floor load w'=(gamG*Gkf+gamQ*Qkf)*crs=78.75 kN/m
Assume the end restraint moment due to gravity load is equal to 10% of the "free" moment.
Design moment @ beam mid-span MEd=0.9*w'*Lb^2/8=318.9 kNm
Design shear force VzEd=w'*Lb/2=236.3 kN

Steel beam section properties

406 x 178 x 74 UKB
Dimensions (mm): h=412.8 b=179.5 tw=9.5 tf=16 r=10.2
Properties (cm): Iy=27300 Iz=1550 Wply=1500 It=62.8 A=94.5

Strength of steel beam

For material thickness 16 mm and steel grade S 275.
Design strength fy=275 N/mm²

Check section for moment and shear

Shear resistance VplRd=Avz*fy/SQR(3)/(gamM0*10^3)
=664.4 kN
Design shear force VzEd=236.3 kN
Moment resistance McRd=0.9*fy*Wply/(gamM0*10^3)
=371.3 kNm
Since MEd ≤ McRd (318.9 kNm ≤ 371.3 kNm), design moment within moment resistance.

Check for deflection

UDL for deflection calculation wu=Qkf*crs=30 kN/m
Total deflection DEL=(5*wu*Lb^4/384)*10^5/(E*Iy)
=8.83 mm
Limiting deflection DELlim=Lb*10^3/360=16.67 mm
As DEL ≤ DELlim (8.83 mm ≤ 16.67 mm), deflection is OK.

UNIVERSAL BEAM	**406 x 178 x 74 UKB Grade S 275**	
	Design shear force	**236.3 kN**
DESIGN	**Shear resistance**	**664.4 kN**
SUMMARY	**Design moment**	**318.9 kNm**
	Moment resistance	**371.3 kNm**
	Deflection	**8.83 mm**
	Limiting deflection	**16.67 mm**

The frame should now be checked for sidesway using unfactored wind loads only and rigidly connected columns to the foundations. The calculated rigid frame deflections should then be increased by 50% (i.e. multiplied by a factor of 1.5) to allow for the flexibility of standard wind-moment connections (provided that the average bay width is at least 6.0 m). For an average bay width of 4.5 m, the deflections from the rigid frame analysis should be multiplied by a factor of 2.0. For bay widths between 4.5 m and 6.0 m, linear interpolation between 2.0 and 1.5 should be used. If the increased values are acceptable, then the design is considered complete.

Location: Ex2 - End column

Wind-moment design of low rise frames

Calculations are in accordance with EN 1993-1-1:2005 and publication SCI-P-263 entitled ' Wind-moment Design of Low Rise Frames '. The wind-moment design method will be adopted here which applies to low rise frames of four storeys or less and assumes that:

- under vertical loads the connections act as simple nominally pinned connections
- under wind loads the connections behave as nominally rigid joints. Points of contraflexure are assumed to occur at the mid-height of the columns and the mid-length of the beams
- with the wind-moment design method the end-plate connections should be sufficiently ductile to accommodate large rotations. Connections are required to resist the moments due to wind loading as well as the shear forces due to vertical loading
- typical connections with sufficient ductility are given in in the BCSA/SCI publication 'Joints in steel construction: Moment connections'. Capacity tables have been reproduced in Appendix D of SCI-P-263
- second order effects due to frame sway (i.e. P-Δ effects) are allowed for by using effective lengths for the columns that are greater than the lengths between floor levels
- columns should be rigidly connected to the foundations, by bases that are designed to resist moments
- any recognised method could be used to determine the sway deflections (see design summary). Sway deflections in each storey should be within the limit of Height/300.

Frame dimensions - Table 1.1 SCI-P-263

Number of storeys	storey=4
Number of bays	bay=4
Storey height (bottom storey)	Ht=5 m
Storey height (elsewhere)	ht=4 m
Parapet height	hp=1.55 m
Frame centres	crs=6 m
Number of frames	no=9

Bay widths

Width of bay 1	L1=6 m
Width of bay 2	L2=6 m
Width of bay 3	L3=6 m
Width of bay 4	L4=6 m

Loading

Permanent load on floors	Gkf=4.5 kN/m²
Imposed load on floors	Qkf=5 kN/m²
Permanent load on roof	Gkr=4 kN/m²
Imposed load on roof	Qkr=1.5 kN/m²

Obstruction height and upwind spacing

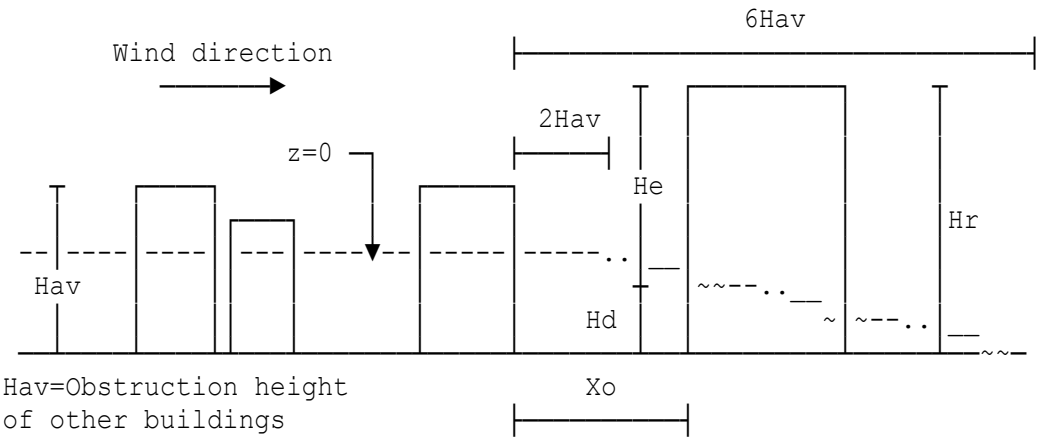

Hav=Obstruction height
of other buildings

Building reference height	Hr=18.55 m
buildings upwind of site	Hav=0.001 m
Upwind spacing of building	Xo=20 m
Displacement height (wind θ=0°)	Hd(0)=3.8 m
Displacement height (wind θ=90°)	Hd(90)=3.8 m
Building height	H=18.55 m

Standard wind loads

Basic wind velocity (Fig. NA.1)	Vbmap=21.5 m/s
Altitude above mean sea level	Asite=25 m
Directional factor (wind θ=0°)	Cdi(0)=1
Directional factor (wind θ=90°)	Cdi(90)=0.73
Distance upwind to shoreline	Dis(0)=2.5 km
Distance inside town terrain	Dit(0)=2.5 km
Distance upwind to shoreline	Dis(90)=2.5 km
Distance inside town terrain	Dit(90)=2.5 km
Probability factor	Cp=1

	Effective height (long face)	**He(0)**	**14.75 m**
	Effective height (short face)	**He(90)**	**14.75 m**
	Altitude factor (long face)	**Ca(0)**	**1.025**
DESIGN	**Altitude factor (short face)**	**Ca(90)**	**1.025**
SUMMARY	**Direction factor (long face)**	**Cdi(0)**	**1**
	Direction factor (short face)	**Cdi(90)**	**0.73**
	Seasonal factor	**Cseason**	**1**
	Probability factor	**Cp**	**1**
	Long face peak velocity pressure	**qp(0)**	**0.7823 kN/m²**
	Short face peak velocity pressure	**qp(90)**	**0.4169 kN/m²**

Partial factors for actions

Factor for permanent actions gamG=1.35
Factor for imposed actions gamQ=1.5

Column design

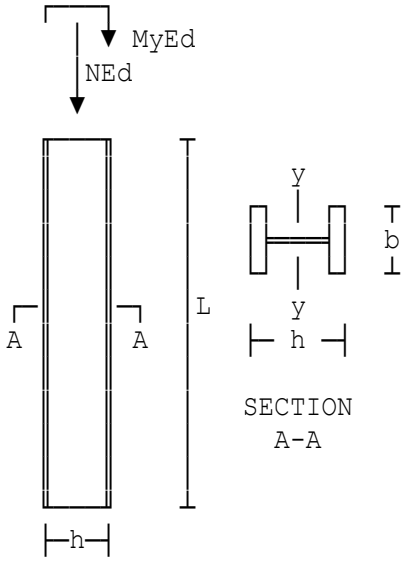

Section suitability will be based on the following three loading combinations:

Comb1: 1.35(Gk)+1.5(Qk)+1.0(EHF)
Comb2: 1.35(Gk)+1.5(Qk)+0.75(Wk)+1.0(EHF)
Comb3: 1.35(Gk)+1.5(Wk)+1.05(Qk)+1.0(EHF)

The effects of patterned loading and variations in beam spans and S.W of column will be ignored.

Loads/moments considered are:
- Beam loading and moment due to rigid column/beam connection
- Moment due to beam eccentricity and moment due to equivalent horizontal forces (EHF).

Factor ψo for imposed psi0i=0.7
Factor ψo for wind psi0w=0.5
Assumed depth of col. section hc=260 mm
254 x 254 x 89 UKC
Young's Modulus E=210 kN/mm²

UNIVERSAL COLUMN	**254 x 254 x 89 UKC Grade S 275**	
	Design axial load	**737.3 kN**
DESIGN	**Buckling resist.**	**1866 kN**
SUMMARY	**Design moment**	**74.97 kNm**
	Moment resistance	**288.4 kNm**
	Unity factor Comb1	**0.5937 ≤ 1**
	Unity factor Comb2	**0.6652 ≤ 1**
	Unity factor Comb3	**0.7942 ≤ 1**

Floor beam design

Beam span Lb=6 m

Design permanent plus imposed loading

Distributed floor load w'=(gamG*Gkf+gamQ*Qkf)*crs=81.45 kN/m
Assume the end restraint moment due to gravity load is equal to 10% of the "free" moment.
Design moment @ beam mid-span MEd=0.9*w'*Lb^2/8=329.9 kNm
Design shear force VzEd=w'*Lb/2=244.4 kN

Steel beam section properties

406 x 178 x 74 UKB
Dimensions (mm): h=412.8 b=179.5 tw=9.5 tf=16 r=10.2
Properties (cm): Iy=27300 Iz=1550 Wply=1500 It=62.8 A=94.5

Strength of steel beam

For material thickness 16 mm and steel grade S 275.
Design strength fy=275 N/mm²

Check section for moment and shear

Shear resistance VplRd=Avz*fy/SQR(3)/(gamM0*10^3)
=664.4 kN
Design shear force VzEd=244.4 kN
Moment resistance McRd=0.9*fy*Wply/(gamM0*10^3)
=371.3 kNm
Since MEd ≤ McRd (329.9 kNm ≤ 371.3 kNm), design moment within moment resistance.

Check for deflection

UDL for deflection calculation wu=Qkf*crs=30 kN/m
Total deflection DEL=(5*wu*Lb^4/384)*10^5/(E*Iy)
=8.83 mm
Limiting deflection DELlim=Lb*10^3/360=16.67 mm
As DEL ≤ DELlim (8.83 mm ≤ 16.67 mm), deflection is OK.

UNIVERSAL BEAM	**406 x 178 x 74 UKB Grade S 275**	
	Design shear force	**244.4 kN**
DESIGN	**Shear resistance**	**664.4 kN**
SUMMARY	**Design moment**	**329.9 kNm**
	Moment resistance	**371.3 kNm**
	Deflection	**8.83 mm**
	Limiting deflection	**16.67 mm**

The frame should now be checked for sidesway using unfactored wind loads only and rigidly connected columns to the foundations. The calculated rigid frame deflections should then be increased by 50% (i.e. multiplied by a factor of 1.5) to allow for the flexibility of standard wind-moment connections (provided that the average bay width is at least 6.0 m). For an average bay width of 4.5 m, the deflections from the rigid frame analysis should be multiplied by a factor of 2.0. For bay widths between 4.5 m and 6.0 m, linear interpolation between 2.0 and 1.5 should be used. If the increased values are acceptable, then the design is considered complete.

Location: Ex1 - British Steel example - K joint

Chord details:
200 x 200 x 8 SHS - Hot finished.
Properties (cm): A=60.8 rx=7.81 Zx=371 Sx=436 Ix=3710 J=5780 C=545

Brace 1 (B1) details:
150 x 150 x 6.3 SHS - Hot finished.
Properties (cm): A=35.8 rx=5.85 Zx=163 Sx=192 Ix=1220 J=1910 C=240

Brace 2 (B2) details:
120 x 120 x 5 SHS - Hot finished.
Properties (cm): A=22.7 rx=4.68 Zx=83 Sx=97.6 Ix=498 J=777 C=122

Young's Modulus	E=205 kN/mm²
Angle of brace	theta1=35°
Angle of brace	theta2=35°
Gap between bracing elements	g=40 mm
Chord (load 1)	Fc1=-500 kN
Chord (load 2)	Fc2=-500 kN
Bracing	Fb1=-100 kN
Bracing	Fb2=50 kN

CAPACITY SUMMARY

K & N Gap and Overlap joints

Brace loading (1)	**Fb1**	**-100 kN**
Load within capacity	**Pass**	
Capacities:-		
Chord face deformation	**N1**	**842.23 kN**
Chord shear between bracings	**NS1**	**1241 kN**
Brace effective width	**NE1**	**1120.5 kN**
Chord punching shear	**NPS1**	**2095.5 kN**
Brace loading (2)	**Fb2**	**50 kN**
Load within capacity	**Pass**	
Capacities:-		
Chord face deformation	**N2**	**842.23 kN**
Chord shear between bracings	**NS2**	**1241 kN**
Brace effective width	**NE2**	**739.82 kN**
Chord punching shear	**NPS2**	**1676.4 kN**

Location: Ex2 - K joint RHS chord CHS bracing

Chord details:
150 x 150 x 6.3 SHS - Hot finished.
Properties (cm): A=35.8 rx=5.85 Zx=163 Sx=192 Ix=1220 J=1910 C=240

Brace 1 (B1) details:
88.9 dia x 5 thick CHS - Hot finished.
Properties (cm): A=13.179 r=2.9716 Z=26.181 S=35.238 I=116.37

Brace 2 (B2) details:
88.9 dia x 5 thick CHS - Hot finished.
Properties (cm): A=13.179 r=2.9716 Z=26.181 S=35.238 I=116.37

Young's Modulus	E=205 kN/mm²
Angle of brace	theta1=45°
Angle of brace	theta2=30°
Gap between bracing elements	g=55 mm
Chord (load 1)	Fc1=-150 kN
Chord (load 2)	Fc2=-150 kN
Bracing	Fb1=-50 kN
Bracing	Fb2=50 kN

CAPACITY SUMMARY

K & N Gap and Overlap joints

Brace loading (1)	**Fb1**	**-50 kN**
Load within capacity	**Pass**	
Capacities:-		
Chord face deformation	**N1**	**285.13 kN**
Chord shear between bracings	**NS1**	**430.26 kN**
Brace effective width	**NE1**	**409.51 kN**
Chord punching shear	**NPS1**	**541.68 kN**
Brace loading (2)	**Fb2**	**50 kN**
Load within capacity	**Pass**	
Capacities:-		
Chord face deformation	**N2**	**403.23 kN**
Chord shear between bracings	**NS2**	**608.48 kN**
Brace effective width	**NE2**	**409.51 kN**
Chord punching shear	**NPS2**	**977.3 kN**

Location: Ex3 - K joint all CHS

Chord details:
193.7 dia x 10 thick CHS - Hot finished.
Properties (cm): A=57.711 r=6.5044 Z=252.1 S=337.79 I=2441.6

Brace 1 (B1) details:
114.3 dia x 5 thick CHS - Hot finished.
Properties (cm): A=17.169 r=3.8684 Z=44.955 S=59.774 I=256.92

Brace 2 (B2) details:
114.3 dia x 3.6 thick CHS - Hot finished.
Properties (cm): A=12.52 r=3.9159 Z=33.593 S=44.132 I=191.98

Young's Modulus	E=205 kN/mm²
Angle of brace	theta1=45°
Angle of brace	theta2=45°
Gap between bracing elements	g=32 mm
Chord (load 1)	Fc1=-50 kN
Chord (load 2)	Fc2=-50 kN
Bracing	Fb1=-500 kN
Bracing	Fb2=100 kN

CAPACITY SUMMARY

K & N Gap and Overlap joints

Brace loading (1)	**Fb1**	**-500 kN**
Load within capacity	**Pass**	
Chord face deformation	**N1**	**716.13 kN**
Chord punching shear	**NPS1**	**1256.4 kN**
Brace loading (2)	**Fb2**	**100 kN**
Load within capacity	**Pass**	
Chord face deformation	**N2**	**716.13 kN**
Chord punching shear	**NPS2**	**1256.4 kN**

Location: Ex4 - X joint

Chord details:
150 x 150 x 6.3 SHS - Hot finished.
Properties (cm): A=35.8 rx=5.85 Zx=163 Sx=192 Ix=1220 J=1910 C=240

Brace 1 (B1) details:
140 x 140 x 5 SHS - Hot finished.
Properties (cm): A=26.7 rx=5.5 Zx=115 Sx=135 Ix=807 J=1250 C=170

Brace 2 (B2) details:
140 x 140 x 5 SHS - Hot finished.
Properties (cm): A=26.7 rx=5.5 Zx=115 Sx=135 Ix=807 J=1250 C=170

Young's Modulus	E=205 kN/mm²
Angle of brace	theta1=45°
Angle of brace	theta2=45°
Chord (load 1)	Fc1=-70 kN
Chord (load 2)	Fc2=-70 kN
Bracing	Fb1=50 kN
Bracing	Fb2=50 kN

CAPACITY SUMMARY

T, Y and X joints

Brace loading	**Fb1 50 kN**
Load within capacity	**Pass**
Capacities:-	
Chord face deformation	**N1 - not within specified range for failure**
Chord shear	**NS1 524.82 kN**
Brace effective width	**NE1 724.51 kN**
Chord punching shear	**NPS1 - not within specified range for failure**
Chord side wall buckling	**NSW1 466.87 kN**
Brace loading (2)	**Fb2 50 kN**
Load within capacity	**Pass**
Capacities:-	
Chord face deformation	**N2 - not within specified range for failure**
Chord shear	**NS2 524.82 kN**
Brace effective width	**NE2 724.51 kN**
Chord punching shear	**NPS2 - not within specified range for failure**
Chord side wall buckling	**NSW2 466.87 kN**

Location: Ex1 - British Steel example (K joint)

Details of chord:
200 x 200 x 8 SHS - Hot finished.
Properties (cm): A=60.8 iy=7.81 Wely=371 Wply=436 Iy=3710 It=5780
Wt=545

Details of brace member 1:
150 x 150 x 6.3 SHS - Hot finished.
Properties (cm): A=35.8 iy=5.85 Wely=163 Wply=192 Iy=1220 It=1910
Wt=240

Details of brace member 2:
120 x 120 x 5 SHS - Hot finished.
Properties (cm): A=22.7 iy=4.68 Wely=83 Wply=97.6 Iy=498 It=777
Wt=122

Angle of brace θ1	theta1=35°
Angle of brace θ2	theta2=35°
Gap between bracing members	g=40 mm
Chord (load 1)	Nc1=-500 kN
Chord (load 2)	Nc2=-500 kN
Bracing	Nb1=-100 kN
Bracing	Nb2=50 kN

DESIGN RESISTANCE SUMMARY

Welded K & N Gap and Overlap joints

Brace 1 loading	**Nb1**	**-100 kN**
Load within design resistance	**Pass**	
Design resistances brace 1:		
Chord face failure	**N1**	**841.33 kN**
Chord design shear	**NS1**	**1241 kN**
Brace effective width	**NE1**	**1120.5 kN**
Chord punching shear	**NPS1**	**2095.5 kN**
Brace 2 loading	**Nb2**	**50 kN**
Load within design resistance	**Pass**	
Design resistances brace 2:		
Chord face failure	**N2**	**841.33 kN**
Chord design shear	**NS2**	**1241 kN**
Brace effective width	**NE2**	**739.82 kN**
Chord punching shear	**NPS2**	**1676.4 kN**
Chord punching shear	**NPS2**	**not within specified range for failure**

Location: Ex2 - K joint RHS chord & CHS bracing

Details of chord:
150 x 150 x 6.3 SHS - Hot finished.
Properties (cm): A=35.8 iy=5.85 Wely=163 Wply=192 Iy=1220 It=1910
Wt=240

Details of brace member 1:
88.9 dia x 5 thick CHS - Hot finished.
Properties (cm): A=13.179 iy=2.9716 Wely=26.181 Wply=35.238 Iy=116.37
It=232.75

Details of brace member 2:
88.9 dia x 5 thick CHS - Hot finished.
Properties (cm): A=13.179 iy=2.9716 Wely=26.181 Wply=35.238 Iy=116.37
It=232.75

Angle of brace θ1	theta1=45°
Angle of brace θ2	theta2=30°
Gap between bracing members	g=55 mm
Chord (load 1)	Nc1=-150 kN
Chord (load 2)	Nc2=-150 kN
Bracing	Nb1=-50 kN
Bracing	Nb2=50 kN

DESIGN RESISTANCE SUMMARY

Welded K & N Gap and Overlap joints

Brace 1 loading	**Nb1**	**-50 kN**
Load within design resistance	**Pass**	
Design resistances brace 1:		
Chord face failure	**N1**	**139276 kN**
Chord design shear	**NS1**	**430.26 kN**
Brace effective width	**NE1**	**409.51 kN**
Chord punching shear	**NPS1**	**541.68 kN**
Brace 2 loading	**Nb2**	**50 kN**
Load within design resistance	**Pass**	
Design resistances brace 2:		
Chord face failure	**N2**	**196966 kN**
Chord design shear	**NS2**	**608.48 kN**
Brace effective width	**NE2**	**409.51 kN**
Chord punching shear	**NPS2**	**977.3 kN**
Chord punching shear	**NPS2**	**not within specified range for failure**

Location: Ex3 - K joint all CHS

Details of chord:
193.7 dia x 10 thick CHS - Hot finished.
Properties (cm): A=57.711 iy=6.5044 Wely=252.1 Wply=337.79 Iy=2441.6
It=4883.2

Details of brace member 1:
114.3 dia x 5 thick CHS - Hot finished.
Properties (cm): A=17.169 iy=3.8684 Wely=44.955 Wply=59.774 Iy=256.92
It=513.84

Details of brace member 2:
114.3 dia x 3.6 thick CHS - Hot finished.
Properties (cm): A=12.52 iy=3.9159 Wely=33.593 Wply=44.132 Iy=191.98
It=383.97

Angle of brace θ1	theta1=45°
Angle of brace θ2	theta2=45°
Gap between bracing members	g=32 mm
Chord (load 1)	Nc1=-50 kN
Chord (load 2)	Nc2=-50 kN
Bracing	Nb1=-500 kN
Bracing	Nb2=100 kN

DESIGN RESISTANCE SUMMARY

Welded K & N Gap and Overlap joints

Brace 1 loading	**Nb1**	**-500 kN**
Load within design resistance	**Pass**	
Chord face failure resistance	**N1**	**716.13 kN**
Chord punching shear resistance	**NPS1**	**1256.4 kN**
Brace 2 loading	**Nb2**	**100 kN**
Load within design resistance	**Pass**	
Chord face failure resistance	**N2**	**716.13 kN**
Chord punching shear resistance	**NPS2**	**1256.4 kN**

Location: Ex4 - Welded X joint

Details of chord:
150 x 150 x 6.3 SHS - Hot finished.
Properties (cm): A=35.8 iy=5.85 Wely=163 Wply=192 Iy=1220 It=1910
Wt=240

Details of brace member 1:
140 x 140 x 5 SHS - Hot finished.
Properties (cm): A=26.7 iy=5.5 Wely=115 Wply=135 Iy=807 It=1250
Wt=170

Details of brace member 2:
140 x 140 x 5 SHS - Hot finished.
Properties (cm): A=26.7 iy=5.5 Wely=115 Wply=135 Iy=807 It=1250
Wt=170

Angle of brace θ1	theta1=45°
Angle of brace θ2	theta2=45°
Chord (load 1)	Nc1=-73 kN
Chord (load 2)	Nc2=-73 kN
Bracing	Nb1=50 kN
Bracing	Nb2=50 kN

DESIGN RESISTANCE SUMMARY

Welded T, X and Y joints

Brace 1 loading	**Nb1**	**50 kN**
Load within design resistance	**Pass**	
Design resistances brace 1:		
Chord face failure	**N1**	**not within specified range for failure**
Chord design shear	**NS1**	**524.82 kN**
Brace effective width	**NE1**	**724.51 kN**
Chord punching shear	**NPS1**	**not within specified range for failure**
Chord side wall buckling	**NSW1**	**474.21 kN**
Brace 2 loading	**Nb2**	**50 kN**
Load within design resistance	**Pass**	
Design resistances brace 2:		
Chord face failure	**N2**	**not within specified range for failure**
Chord design shear	**NS2**	**524.82 kN**
Brace effective width	**NE2**	**724.51 kN**
Chord punching shear	**NPS2**	**not within specified range for failure**
Chord side wall buckling	**NSW2**	**474.21 kN**

Location: Ex5 - Welded X joint using CHS for braces and chord

Details of chord:
219.1 dia x 8 thick CHS - Hot finished.
Properties (cm): A=53.055 iy=7.4689 Wely=270.16 Wply=356.68 Iy=2959.6
It=5919.3

Details of brace member 1:
114.3 dia x 8 thick CHS - Hot finished.
Properties (cm): A=26.716 iy=3.7689 Wely=66.403 Wply=90.568 Iy=379.49
It=758.98

Details of brace member 2:
114.3 dia x 8 thick CHS - Hot finished.
Properties (cm): A=26.716 iy=3.7689 Wely=66.403 Wply=90.568 Iy=379.49
It=758.98

Angle of brace θ1	theta1=45°
Angle of brace θ2	theta2=45°
Chord (load 1)	Nc1=-73 kN
Chord (load 2)	Nc2=-73 kN
Bracing	Nb1=50 kN
Bracing	Nb2=50 kN

DESIGN RESISTANCE SUMMARY

Welded T, X and Y joints

Brace 1 loading	**Nb1**	**50 kN**
Load within design resistance	**Pass**	
Chord face failure resistance	**N1**	**289.35 kN**
Brace 2 loading	**Nb2**	**50 kN**
Load within design resistance	**Pass**	
Chord face failure resistance	**N2**	**289.35 kN**

Location: Ex1 - RHS section

Chord details:
200 x 200 x 8 SHS - Hot finished.
Properties (cm): A=60.8 rx=7.81 Zx=371 Sx=436 Ix=3710 J=5780 C=545

Brace member 1 details:
150 x 150 x 6.3 SHS - Hot finished.
Properties (cm): A=35.8 rx=5.85 Zx=163 Sx=192 Ix=1220 J=1910 C=240

Young's Modulus	E=205 kN/mm²
Angle of brace θ1	theta1=35°
Chord axial load 1	Fc1=-500 kN
Chord axial load 2	Fc2=-500 kN
Brace axial load	Fb1=-100 kN
Bracing in-plane moment	Mx=9.6 kNm
Bracing out-of-plane moment	My=0.7 kNm

LOAD SUMMARY - welded T, Y & X joints

Brace loading	**Fb1**	**-100 kN**
Load within capacity	**Pass**	

Capacities:

Chord face deformation	**N1**	**731.25 kN**
Brace effective width	**NE1**	**not within specified range for failure**
Chord punching shear	**NPS1**	**not within specified range for failure**
Chord punching shear	**NSW1**	**not within specified range for failure**

Welding

Prequalified weld throat thickness size:
Based on brace member 1 thickness and steel Grade S 355.
Minimum throat thickness a=1.09*t1=6.867 mm
Further details on welding can be obtained from British Steel Tubes and Pipes publication 'SHS Welding'.

DESIGN SUMMARY

Brace 1 axial load	**-100 kN**
Axial capacity	**731.25 kN**
Brace 1 in-plane BM	**9.6 kNm**
Moment capacity	**24.424 kNm**
Brace 1 out-of-plane BM	**0.7 kNm**
Moment capacity	**26.652 kNm**
Interaction factor	**0.55607 ≤ 1**

Location: Ex2 - Welded knee joint (unreinforced)

Chord details:
200 x 100 x 8 RHS - Hot finished.
Properties (cm): A=44.8 rx=7.06 Zx=223 Sx=282 Ix=2230
J=1800 C=251 Zy=148 Sy=172 Iy=739 ry=4.06

Young's Modulus	E=205 kN/mm²
Applied load	Fc=-36 kN
Applied moment	Mx=89 kNm
Angle of knee θ	theta=150°

RHS KNEE JOINT

HOT FINISHED	**In accordance with EN 10210**	
RECTANGULAR HOLLOW SECTION	**200 x 100 x 8 RHS Grade S 355**	
SECTION	**Connection is satisfactory for axial**	
SUMMARY	**load and interaction expression.**	
	Axial load	**-36 kN**
	Axial tensile capacity	**1590.4 kN**
	Applied moment	**89 kNm**
	Moment capacity	**100.11 kNm**
	Joint efficiency factor K	**0.91993**
	Interaction factor	**0.91166 ≤ 0.91993**

Location: Ex3 - CHS section (N joint)

Chord details:
193.7 dia x 8 thick CHS - Hot finished.
Properties (cm): A=46.672 r=6.5716 Z=208.11 S=276.05 I=2015.5

Brace member 1 details:
114.3 dia x 5 thick CHS - Hot finished.
Properties (cm): A=17.169 r=3.8684 Z=44.955 S=59.774 I=256.92

Brace member 2 details:
76.1 dia x 4 thick CHS - Hot finished.
Properties (cm): A=9.0604 r=2.553 Z=15.52 S=20.815 I=59.055

Young's Modulus	E=205 kN/mm²
Angle of brace θ1	theta1=40°
Angle of brace θ2	theta2=90°
Gap between bracing elements	g=20 mm
Chord axial load 1	Fc1=-600 kN
Chord axial load 2	Fc2=-600 kN
Brace 1 axial load	Fb1=-200 kN
Brace 2 axial load	Fb2=150 kN
Bracing in-plane moment	Mx=9.6 kNm
Bracing out-of-plane moment	My=0.7 kNm
Bracing in-plane moment	Mx2=2 kNm
Bracing out-of-plane moment	My2=0.5 kNm

LOAD SUMMARY - welded K & N gap joints

Brace member 1 axial load	**Fb1 -200 kN**
Load within capacity	**Pass**
Chord face deformation	**N1 440.23 kN**
Chord punching shear	**NPS1 906.72 kN**
Brace member 2 axial load	**Fb2 150 kN**
Load within capacity	**Pass**
Chord punching shear	**NPS2 303.67 kN**

Welding

Prequalified weld throat thickness size:
Based on brace member 1 thickness and steel Grade S 275.
Minimum throat thickness a=0.94*t1=4.7 mm
CHS bracing requires partial end profiling to achieve the weld fit up.
Based on brace member 2 thickness and steel Grade S 275.
Minimum throat thickness a2=0.94*t2=3.76 mm
CHS bracing requires partial end profiling to achieve the weld fit up.
Further details on welding can be obtained from British Steel Tubes and Pipes publication 'SHS Welding'.

DESIGN SUMMARY

Brace 1 axial load	**-200 kN**
Axial capacity	**440.23 kN**
Brace 1 in-plane BM	**9.6 kNm**
Moment capacity	**25.956 kNm**
Brace 1 out-of-plane BM	**0.7 kNm**
Moment capacity	**14.039 kNm**
Interaction factor	**0.64096 ≤ 1**
Brace 2 axial load	**150 kN**
Axial capacity	**282.97 kN**
Brace 2 in-plane BM	**2 kNm**
Moment capacity	**7.3558 kNm**
Brace 2 out-of-plane BM	**0.5 kNm**
Moment capacity	**6.0081 kNm**
Interaction factor	**0.68723 ≤ 1**

Location: Ex1 - RHS section

Chord details:
200 x 200 x 8 SHS - Hot finished.
Properties (cm): A=60.8 iy=7.81 Wely=371 Wply=436 Iy=3710 It=5780
Wt=545

Brace member 1 details:
150 x 150 x 6.3 SHS - Hot finished.
Properties (cm): A=35.8 iy=5.85 Wely=163 Wply=192 Iy=1220 It=1910
Wt=240

Young's Modulus	E=210 kN/mm²
Angle of brace θ1	theta1=35°
Chord axial load 1	Nc1=-500 kN
Chord axial load 2	Nc2=-500 kN
Brace member axial load	Nb1=-100 kN
Bracing in-plane moment	My1=9.6 kNm
Bracing out-of-plane moment	Mz1=0.7 kNm

LOAD SUMMARY - welded T, Y & X joints

Brace loading	**Nb1**	**-100 kN**
Load within resistance	**Pass**	

Resistances:

Chord face failure	**N1**	**731.25 kN**
Brace effective width	**NE1**	**not within specified range for failure**
Chord punching shear	**NPS1**	**not within specified range for failure**
Chord punching shear	**NSW1**	**not within specified range for failure**

Welding

Prequalified weld throat thickness size:
Based on brace member 1 thickness and steel Grade S 355.
Minimum throat thickness a=1.11*t1=6.993 mm
Further details on welding can be obtained from TATA Steel publication entitled 'Design of Welded Joints'.

DESIGN SUMMARY

Brace 1 axial load	**-100 kN**
Axial resistance	**731.25 kN**
Brace 1 in-plane BM	**9.6 kNm**
Moment resistance	**24.424 kNm**
Brace 1 out-of-plane BM	**0.7 kNm**
Moment resistance	**26.652 kNm**
Interaction factor	**0.55607 ≤ 1**

Location: Ex2 - Welded knee joint (unreinforced RHS)

Chord details:
200 x 100 x 8 RHS - Hot finished.
Properties (cm): A=44.8 iz=4.06 Wely=223 Wply=282 Iy=2230
It=1800 Wt=251 Welz=148 Wplz=172 Iz=739 iy=7.06

Young's Modulus	E=210 kN/mm²
Applied axial load	Nc=-36 kN
Applied moment	My1=89 kNm
Angle of knee θ	theta=150°

RHS KNEE JOINT

HOT FINISHED	**In accordance with EN 10210**
RECTANGULAR HOLLOW SECTION	**200 x 100 x 8 RHS Grade S 355**
SECTION	**Connection is satisfactory for axial**
SUMMARY	**load and interaction expression.**
	Design axial load -36 kN
	Axial tensile resistance 1590.4 kN
	Applied moment 89 kNm
	Moment resistance 100.11 kNm
	Member class Class 1
	Joint efficiency factor K 0.91993
	Interaction factor 0.91166 ≤ 0.91993

Location: Ex3 - CHS section (N joint)

Chord details:
193.7 dia x 8 thick CHS - Hot finished.
Properties (cm): A=46.672 iy=6.5716 Wely=208.11 Wply=276.05 Iy=2015.5
It=4031.1

Brace member 1 details:
114.3 dia x 5 thick CHS - Hot finished.
Properties (cm): A=17.169 iy=3.8684 Wely=44.955 Wply=59.774 Iy=256.92
It=513.84

Brace member 2 details:
76.1 dia x 4 thick CHS - Hot finished.
Properties (cm): A=9.0604 iy=2.553 Wely=15.52 Wply=20.815 Iy=59.055
It=118.11

Young's Modulus	E=210 kN/mm²
Angle of brace θ1	theta1=40°
Angle of brace θ2	theta2=90°
Gap between bracing elements	g=20 mm
Chord axial load 1	Nc1=-600 kN
Chord axial load 2	Nc2=-600 kN
Brace 1 axial load	Nb1=-200 kN
Brace 2 axial load	Nb2=150 kN
Bracing in-plane moment	My1=9.6 kNm
Bracing out-of-plane moment	Mz1=0.7 kNm
Bracing in-plane moment	My2=2 kNm
Bracing out-of-plane moment	Mz2=0.5 kNm

LOAD SUMMARY - welded K & N gap joints

Brace member 1 axial load	**Nb1 -200 kN**
Load within resistance	**Pass**
Chord face failure	**N1 568.3 kN**
Chord punching shear	**NPS1 1170.5 kN**
Brace member 2 axial load	**Nb2 150 kN**
Load within resistance	**Pass**
Chord punching shear	**NPS2 392.01 kN**

Welding

Prequalified weld throat thickness size:
Based on brace member 1 thickness and steel Grade S 355.
Minimum throat thickness a=1.11*t1=5.55 mm
CHS bracing requires partial end profiling to achieve the weld fit up.
Based on brace member 2 thickness and steel Grade S 355.
Minimum throat thickness a2=1.11*t2=4.44 mm
CHS bracing requires partial end profiling to achieve the weld fit up.
Further details on welding can be obtained from TATA Steel publication entitled 'Design of Welded Joints'.

DESIGN SUMMARY

Brace 1 axial load	**-200 kN**
Axial resistance	**568.3 kN**
Brace 1 in-plane BM	**9.6 kNm**
Moment resistance	**33.507 kNm**
Brace 1 out-of-plane BM	**0.7 kNm**
Moment resistance	**18.123 kNm**
Interaction factor	**0.47264 ≤ 1**
Brace 2 axial load	**150 kN**
Axial resistance	**365.29 kN**
Brace 2 in-plane BM	**2 kNm**
Moment resistance	**9.4957 kNm**
Brace 2 out-of-plane BM	**0.5 kNm**
Moment resistance	**7.7559 kNm**
Interaction factor	**0.51946 ≤ 1**

Copyright 1986-2024 Fitzroy Systems Ltd.

Location: Ex4 - RHS section (X joint)

Chord details:
200 x 200 x 8 SHS - Hot finished.
Properties (cm): A=60.8 iy=7.81 Wely=371 Wply=436 Iy=3710 It=5780
Wt=545

Brace member 1 details:
180 x 180 x 6.3 SHS - Hot finished.
Properties (cm): A=43.3 iy=7.07 Wely=241 Wply=281 Iy=2170 It=3360
Wt=355

Brace member 2 details:
180 x 180 x 6.3 SHS - Hot finished.
Properties (cm): A=43.3 iy=7.07 Wely=241 Wply=281 Iy=2170 It=3360
Wt=355

Young's Modulus	E=210 kN/mm²
Angle of brace θ1	theta1=35°
Angle of brace θ2	theta2=30°
Chord axial load 1	Nc1=-500 kN
Chord axial load 2	Nc2=-500 kN
Brace 1 axial load	Nb1=-100 kN
Brace 2 axial load	Nb2=-100 kN
Bracing in-plane moment	My1=9.6 kNm
Bracing out-of-plane moment	Mz1=0.7 kNm
Bracing in-plane moment	My2=0 kNm
Bracing out-of-plane moment	Mz2=0 kNm
Young's Modulus	E=210 kN/mm²
Young's Modulus	E=210 kN/mm²

LOAD SUMMARY - welded T, Y & X joints

Brace loading	**Nb1**	**-100 kN**
Load within resistance	**Pass**	
Resistances:		
Chord face failure	**N1**	**not within specified range for failure**
Chord shear	**NS1**	**1097.7 kN**
Brace effective width	**NE1**	**1157.7 kN**
Chord punching shear	**NPS1**	**2205.9 kN**
Chord side wall buckling	**NSW1**	**724.81 kN**
Brace member 2 axial load	**Nb2**	**-100 kN**
Load within resistance	**Pass**	
Resistances:		
Chord face failure	**N2**	**not within specified range for failure**
Chord shear	**NS2**	**1259.3 kN**
Brace effective width	**NE2**	**1157.7 kN**
Chord punching shear	**NPS2**	**2833.4 kN**

Chord side wall buckling NSW2 728.75 kN

Welding

Prequalified weld throat thickness size:
Based on brace member 1 thickness and steel Grade S 355.
Minimum throat thickness a=1.11*t1=6.993 mm
Based on brace member 2 thickness and steel Grade S 355.
Minimum throat thickness a2=1.11*t2=6.993 mm
Further details on welding can be obtained from TATA Steel publication entitled 'Design of Welded Joints'.

DESIGN SUMMARY

Brace 1 axial load	**-100 kN**
Axial resistance	**724.81 kN**
Brace 1 in-plane BM	**9.6 kNm**
Moment resistance	**54.982 kNm**
Brace 1 out-of-plane BM	**0.7 kNm**
Moment resistance	**72.441 kNm**
Interaction factor	**0.32223 ≤ 1**
Brace 2 axial load	**-100 kN**
Axial resistance	**728.75 kN**
Brace 2 in-plane BM	**0 kNm**
Moment resistance	**54.982 kNm**
Interaction factor	**0.13724 ≤ 1**

Location: Ex1 - Transverse gusset

193.7 dia x 8 thick CHS - Hot finished.
Properties (cm): A=46.672 r=6.5716 Z=208.11 S=276.05 I=2015.5

Width of plate	b1=180 mm
Thickness of plate	t1=10 mm
Chord (axial load 1)	Fc1=-500 kN
Chord (axial load 2)	Fc2=-500 kN
Bracing axial load	Fb=100 kN
Out-of-plane moment	Mo=2 kNm

Capacity Summary

Transverse gusset plate	**180 mm x 10 mm Grade S 355**
Applied loading	**Fb 100 kN**
Chord face deformation	**N1 459.38 kN**
Load within capacity	**Pass**
Out-of plane moment	**Mo 2 kNm**
Out-of plane moment capacity	**Mo1 41.344 kNm**
Moment within capacity	**Pass**
Applied punching shear value	**Napp 166.67 kN**
Punching shear capacity	**NPS 590.28 kN**
Load within capacity	**Pass**

Location: Ex2 - UC section brace to RHS chord

300 x 200 x 12.5 RHS - Hot finished.
Properties (cm): A=117 rx=11 Zx=952 Sx=1170 Ix=14300
J=15700 C=1220 Zy=754 Sy=877 Iy=7540 ry=8.02
254 x 254 x 89 UC.

Chord (axial load 1)	Fc1=900 kN
Chord (axial load 2)	Fc2=900 kN
Bracing axial load	Fb=-350 kN
In-plane moment	Mi=67 kNm

Capacity Summary

Universal column bracing	**254 x 254 x 89 UC Grade S 275**
Gusset loading	**Fb -350 kN**
Load within capacity	**Pass**

Capacities:

Brace effective width	**NE1 1101.3 kN**
Chord punching shear	**NPS1 not within specified range for failure**
Chord side wall crushing	**NSW1 1097.3 kN**
In-plane moment	**Mi 67 kNm**
In-plane moment capacity	**Mi1 133.32 kNm**
Moment within capacity	**Pass**

Copyright 1986-2024 Fitzroy Systems Ltd.

Location: Ex3 - Longitudinal gusset

150 x 150 x 8 SHS - Hot finished.
Properties (cm): A=44.8 rx=5.77 Zx=199 Sx=237 Ix=1490 J=2350 C=291

Plate length along chord line	h1=200 mm
Thickness of plate	t1=10 mm
Chord (axial load 1)	Fc1=-550 kN
Chord (axial load 2)	Fc2=-500 kN
Bracing axial load	Fb=90 kN
In-plane moment	Mi=4 kNm

Capacity Summary

Longitudinal gusset plate	**200 mm x 10 mm Grade S 355**
Gusset loading	**Fb 90 kN**
Chord face deformation	**N1 135.2 kN**
Load within capacity	**Pass**
In-plane moment	**Mi 4 kNm**
In-plane moment capacity	**Mi1 13.52 kNm**
Moment within capacity	**Pass**

Location: Ex1 - Transverse gusset to CHS chord

193.7 dia x 8 thick CHS - Hot finished.
Properties (cm): A=46.672 iy=6.5716 Wely=208.11 Wply=276.05 Iy=2015.5
It=4031.1

Width of plate	b1=180 mm
Thickness of plate	t1=10 mm
Chord (axial load 1)	Nc1=-500 kN
Chord (axial load 2)	Nc2=-500 kN
Bracing axial load	Nb=100 kN
Out-of-plane moment	Mo=2 kNm

DESIGN RESISTANCE SUMMARY

Transverse gusset plate	**180 mm x 10 mm Grade S 355**
Bracing axial loading	**Nb 100 kN**
Chord face failure	**N1 459.38 kN**
Load within design resistance	**Pass**
Out-of plane design moment	**Mo 2 kNm**
Out-of plane BM resistance	**Mo1 41.344 kNm**
Moment within BM resistance	**Pass**
Applied punching shear value	**Napp 166.67 kN**
Punching shear resistance	**NPS 590.28 kN**
Load within shear resistance	**Pass**

Location: Ex2 - UKC section brace to RHS chord

300 x 200 x 12.5 RHS - Hot finished.
Properties (cm): A=117 iz=8.02 Wely=952 Wply=1170 Iy=14300
It=15700 Wt=1220 Welz=754 Wplz=877 Iz=7540 iy=11
254 x 254 x 89 UKC

Chord (axial load 1)	Nc1=900 kN
Chord (axial load 2)	Nc2=900 kN
Bracing axial load	Nb=-350 kN
In-plane moment	Mi=67 kNm

DESIGN RESISTANCE SUMMARY

Universal column bracing	**254 x 254 x 89 UKC Grade S 355**
Gusset axial loading	**Nb -350 kN**
Load within resistance	**Pass**

Resistances:

Brace effective width	**NE1 1421.7 kN**
Chord punching shear	**NPS1 not within failure range**
Chord side wall crushing	**NSW1 1416.5 kN**
In-plane design moment	**Mi 67 kNm**
In-plane moment resistance	**Mi1 172.1 kNm**
Moment within BM resistance	**Pass**

Copyright 1986-2024 Fitzroy Systems Ltd.

Location: Ex3 - Longitudinal gusset to SHS chord

150 x 150 x 10 SHS - Hot finished.
Properties (cm): A=54.9 iy=5.68 Wely=236 Wply=286 Iy=1770 It=2830
Wt=344

Plate length along chord line	h1=200 mm
Thickness of plate	t1=10 mm
Chord (axial load 1)	Nc1=-500 kN
Chord (axial load 2)	Nc2=-500 kN
Bracing axial load	Nb=90 kN
In-plane moment	Mi=4 kNm

DESIGN RESISTANCE SUMMARY

Longitudinal gusset plate	**200 mm x 10 mm Grade S 355**
Gusset axial loading	**Nb 90 kN**
Chord face failure	**N1 224.08 kN**
Load within resistance	**Pass**
In-plane design moment	**Mi 4 kNm**
In-plane moment resistance	**Mi1 22.408 kNm**
Moment within BM resistance	**Pass**

Location: Example 17, Steelwork Design Guide to BS5950

Double angle web cleat connection

Analysis of the connection follows the treatment in the BCSA publication entitled 'Manual on Connections Volume 1 - Joints in simple construction' amended to comply with the requirements of BS5950-1:2000.

Universal section to universal section connection using standard bolts

Supporting member details

254 x 254 x 89 UC.
Thickness of connecting ply ts=17.3 mm

Supported beam details

533 x 210 x 92 UB.

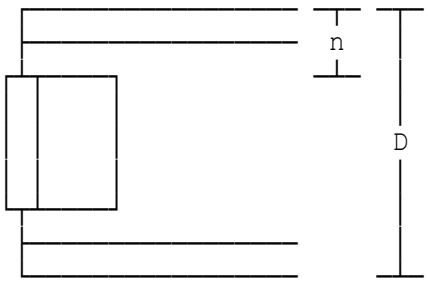

Distance top of beam/top of cleat n=40 mm

Thickness of angle cleats tp=10 mm
Length of angle cleat leg lc=90 mm
Backmark bmk=60 mm
Diameter of bolts (double shear) db=20 mm
Provide 1 line/s of fasteners.
Provide 8 rows of fasteners in each line.
Supported beam end clearance ec=10 mm
Diameter of bolts (single shear) db1=20 mm

Pitch of bolts p'=100 mm
No. of bolts in supporting memb bn1=8
To calculate the load on the outermost bolt due to moment, apply the unit area method. Function of inertia of bolt group:

WEB CLEAT SUMMARY - BOLTS IN DOUBLE SHEAR

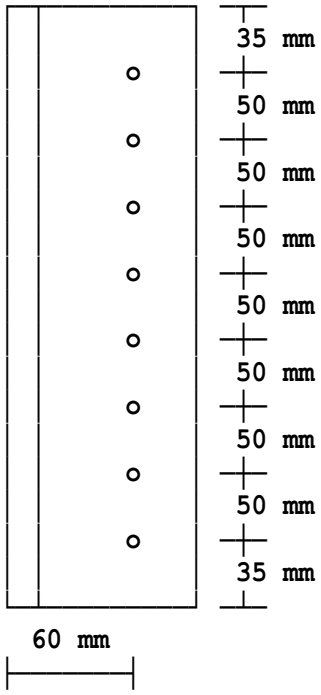

WEB CLEAT SUMMARY - BOLTS IN SINGLE SHEAR

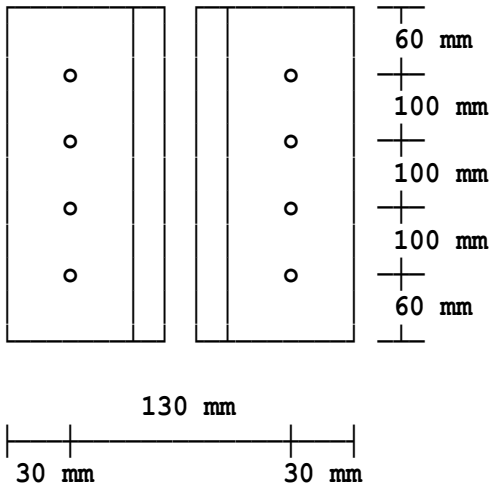

ANGLE DETAILS	**90 mm x 90 mm x 10 mm**	
SUMMARY	**Grade S 275**	
	Length of cleat	**420 mm**
LEGS CONNECTED	**Number of bolts/leg**	**4**
TO SUPPORTING	**Diameter of bolts**	**M 20 Grade 8.8**
MEMBER	**Pitch**	**100 mm**
	End distance	**60 mm**
LEGS CONNECTED	**Number of bolts**	**8**
TO BEAM WEB	**Diameter of bolts**	**M 20 Grade 8.8**
	Pitch	**50 mm**
	End distance	**30 mm**

Location: Example 1 - Joints publication - 2 lines of bolts

Double angle web cleat connection

Analysis of the connection follows the treatment in the BCSA publication entitled 'Manual on Connections Volume 1 - Joints in simple construction' amended to comply with the requirements of BS5950-1:2000.

Universal section to universal section connection using standard bolts

Supporting member details

610 x 229 x 140 UB.
Thickness of connecting ply ts=13.1 mm

Supported beam details

406 x 178 x 74 UB.

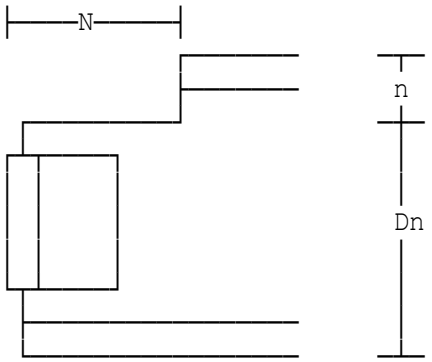

Length of notch to end face N=120 mm
Depth of notch n=50 mm
Thickness of angle cleats tp=10 mm
Length of angle cleat leg lc=150 mm
Length of angle cleat leg (short) lc'=90 mm
Backmark bmk=50 mm
Diameter of bolts (double shear) db=20 mm
Provide 2 line/s of fasteners.
Provide 4 rows of fasteners in each line.
Horizontal bolt spacing g=50 mm
Supported beam end clearance ec=10 mm
Diameter of bolts (single shear) db1=20 mm

Pitch of bolts p'=70 mm
No. of bolts in supporting memb bn1=8

To calculate the load on the outermost bolt due to moment, apply the unit area method. Function of inertia of bolt group:

Dimension et=50 mm

Applied shear force Qa=620 kN

WEB CLEAT SUMMARY - BOLTS IN DOUBLE SHEAR

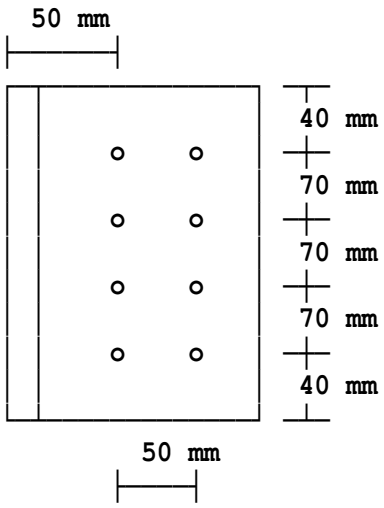

WEB CLEAT SUMMARY - BOLTS IN SINGLE SHEAR

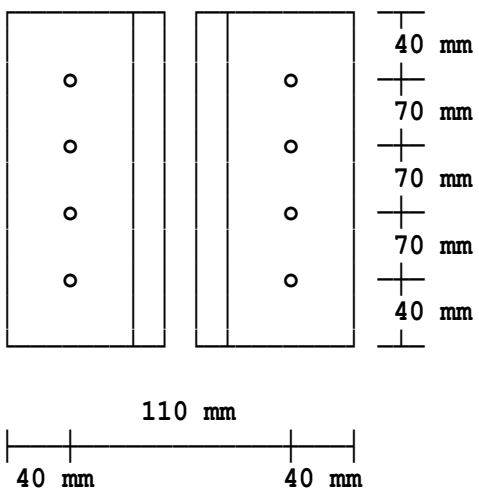

ANGLE DETAILS	**150 mm x 90 mm x 10 mm**	
SUMMARY	**Grade S 275**	
	Length of cleat	**290 mm**
LEGS CONNECTED	**Number of bolts/leg**	**4**
TO SUPPORTING	**Diameter of bolts**	**M 20 Grade 8.8**
MEMBER	**Pitch**	**70 mm**
	End distance	**40 mm**
LEGS CONNECTED	**Number of bolts**	**8**
TO BEAM WEB	**Diameter of bolts**	**M 20 Grade 8.8**
	Pitch	**70 mm**
	End distance	**50 mm**

Location: Example 2 - Joints publication - Tie force

Double angle web cleat connection

Analysis of the connection follows the treatment in the BCSA publication entitled 'Manual on Connections Volume 1 - Joints in simple construction' amended to comply with the requirements of BS5950-1:2000.

Universal section to universal section connection using standard bolts
Structural integrity tie force Tf=230 kN

Supporting member details

305 x 305 x 137 UC.
Thickness of connecting ply ts=13.8 mm

Supported beam details

406 x 178 x 74 UB.

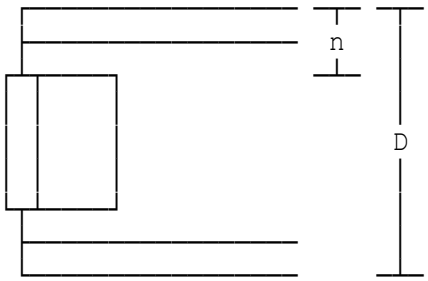

Distance top of beam/top of cleat n=50 mm

Thickness of angle cleats tp=10 mm
Length of angle cleat leg lc=150 mm
Length of angle cleat leg (short) lc'=90 mm
Backmark bmk=50 mm
Diameter of bolts (double shear) db=20 mm
Provide 2 line/s of fasteners.
Provide 4 rows of fasteners in each line.
Horizontal bolt spacing g=50 mm
Supported beam end clearance ec=10 mm
Diameter of bolts (single shear) db1=20 mm

Pitch of bolts p'=70 mm
No. of bolts in supporting memb bn1=8

WEB CLEAT SUMMARY - BOLTS IN DOUBLE SHEAR

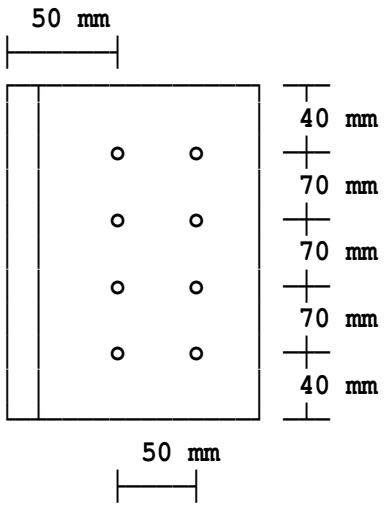

WEB CLEAT SUMMARY - BOLTS IN SINGLE SHEAR

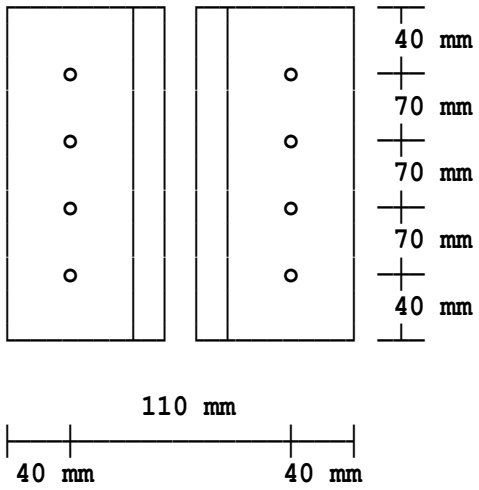

ANGLE DETAILS	**150 mm x 90 mm x 10 mm**	
SUMMARY	**Grade S 275**	
	Length of cleat	**290 mm**
LEGS CONNECTED	**Number of bolts/leg**	**4**
TO SUPPORTING	**Diameter of bolts**	**M 20 Grade 8.8**
MEMBER	**Pitch**	**70 mm**
	End distance	**40 mm**
LEGS CONNECTED	**Number of bolts**	**8**
TO BEAM WEB	**Diameter of bolts**	**M 20 Grade 8.8**
	Pitch	**70 mm**
	End distance	**50 mm**

Location: Example using non-standard section and tie force

Double angle web cleat connection

Analysis of the connection follows the treatment in the BCSA publication entitled 'Manual on Connections Volume 1 - Joints in simple construction' amended to comply with the requirements of BS5950-1:2000.

Universal section to universal section connection using standard bolts
Structural integrity tie force Tf=175 kN

Supporting member details

Thickness of connecting ply ts=10 mm

Supported beam details

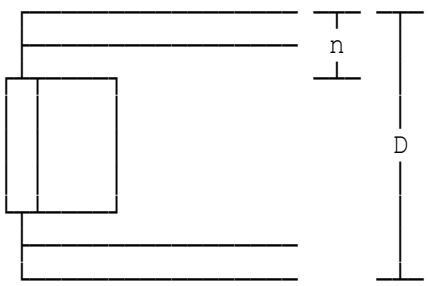

Distance top of beam/top of cleat n=50 mm

Thickness of angle cleats tp=10 mm
Length of angle cleat leg lc=90 mm
Backmark bmk=60 mm
Diameter of bolts (double shear) db=20 mm
Provide 1 line/s of fasteners.
Provide 8 rows of fasteners in each line.
Supported beam end clearance ec=10 mm
Diameter of bolts (single shear) db1=20 mm

Pitch of bolts p'=100 mm
No. of bolts in supporting memb bn1=8
To calculate the load on the outermost bolt due to moment, apply the unit area method. Function of inertia of bolt group:

WEB CLEAT SUMMARY - BOLTS IN DOUBLE SHEAR

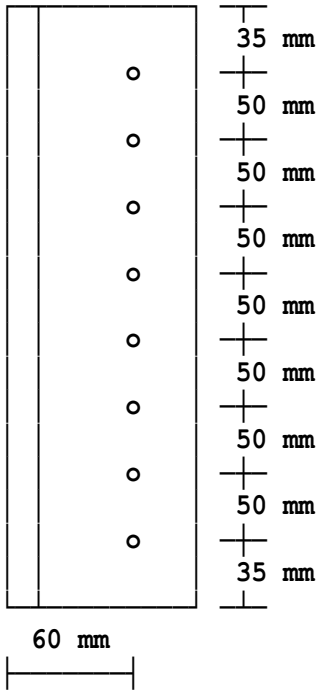

WEB CLEAT SUMMARY - BOLTS IN SINGLE SHEAR

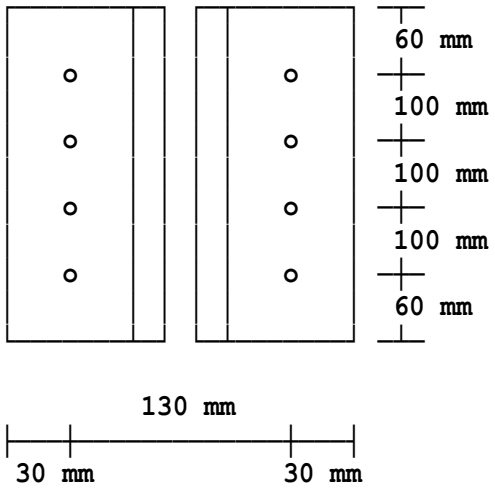

ANGLE DETAILS	**90 mm x 90 mm x 10 mm**	
SUMMARY	**Grade S 275**	
	Length of cleat	**420 mm**
LEGS CONNECTED	**Number of bolts/leg**	**4**
TO SUPPORTING	**Diameter of bolts**	**M 20 Grade 8.8**
MEMBER	**Pitch**	**100 mm**
	End distance	**60 mm**
LEGS CONNECTED	**Number of bolts**	**8**
TO BEAM WEB	**Diameter of bolts**	**M 20 Grade 8.8**
	Pitch	**50 mm**
	End distance	**30 mm**

Location: Example using Flowdrill bolts

Double angle web cleat connection

Analysis of the connection follows the treatment in the BCSA publication entitled 'Manual on Connections Volume 1 - Joints in simple construction' amended to comply with the requirements of BS5950-1:2000.

Universal section beam to RHS column connection using standard bolts connecting the beam to the web cleats.
Flowdrill bolts will be utilised for connecting cleats to the column.

Supporting member details

250 x 250 x 10 SHS - Hot finished.
Properties (cm): A=94.9 rx=9.77 Zx=724 Sx=851 Ix=9060 J=14100 C=1070

Supported beam details

406 x 178 x 74 UB.

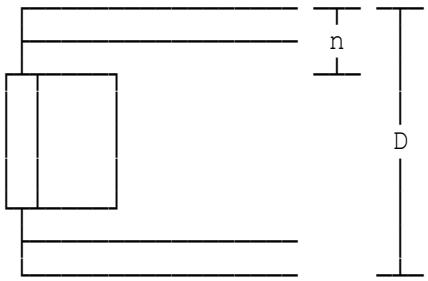

Distance top of beam/top of cleat n=50 mm

Thickness of angle cleats	tp=10 mm
Length of angle cleat leg	lc=150 mm
Length of angle cleat leg (short)	lc'=90 mm
Backmark	bmk=50 mm
Diameter of bolts (double shear)	db=20 mm

Provide 2 line/s of fasteners.
Provide 4 rows of fasteners in each line.

Horizontal bolt spacing	g=50 mm
Supported beam end clearance	ec=10 mm
Diameter of Flowdrill bolts	db1=20 mm
Pitch of bolts	p'=70 mm
No. of bolts in supporting memb	bn1=8

To calculate the load on the outermost bolt due to moment, apply the unit area method. Function of inertia of bolt group:
Distance top beam to plate n=50 mm

WEB CLEAT SUMMARY - BOLTS IN DOUBLE SHEAR

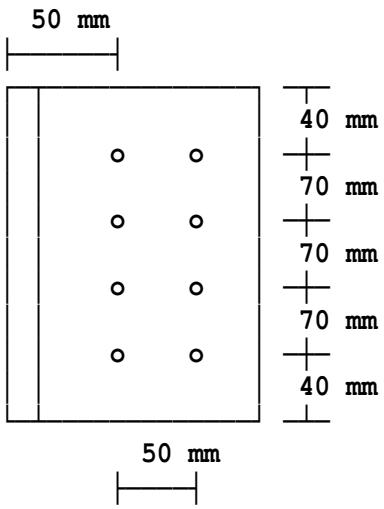

WEB CLEAT SUMMARY - BOLTS IN SINGLE SHEAR

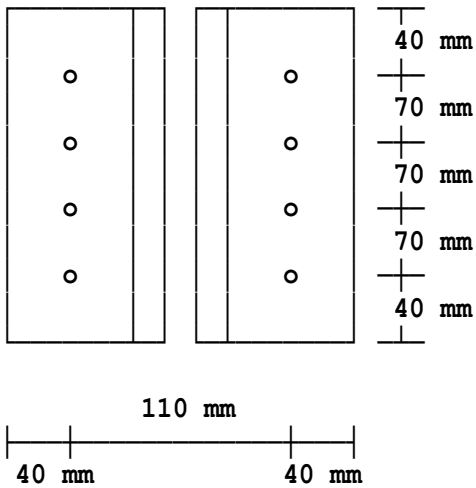

ANGLE DETAILS	**150 mm x 90 mm x 10 mm**	
SUMMARY	**Grade S 275**	
	Length of cleat	**290 mm**
LEGS CONNECTED	**Number of bolts/leg**	**4**
TO SUPPORTING	**Diameter of bolts**	**M 20 Flowdrill**
MEMBER	**Pitch**	**70 mm**
	End distance	**40 mm**
LEGS CONNECTED	**Number of bolts**	**8**
TO BEAM WEB	**Diameter of bolts**	**M 20 Grade 8.8**
	Pitch	**70 mm**
	End distance	**50 mm**

Location: Flowdrill bolts - Tie force

Double angle web cleat connection

Analysis of the connection follows the treatment in the BCSA publication entitled 'Manual on Connections Volume 1 - Joints in simple construction' amended to comply with the requirements of BS5950-1:2000.

Universal section beam to RHS column connection using standard bolts connecting the beam to the web cleats.
Flowdrill bolts will be utilised for connecting cleats to the column.
Structural integrity tie force Tf=75 kN

Supporting member details

250 x 250 x 12.5 SHS - Hot finished.
Properties (cm): A=117 rx=9.66 Zx=873 Sx=1040 Ix=10900 J=17200 C=1280

Supported beam details

406 x 178 x 74 UB.

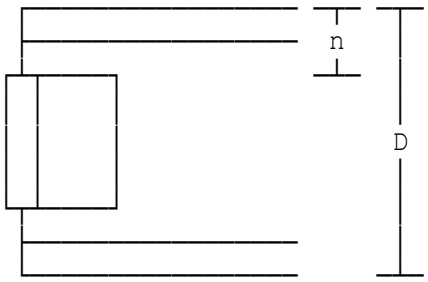

Distance top of beam/top of cleat n=50 mm

Thickness of angle cleats tp=10 mm
Length of angle cleat leg lc=90 mm
Backmark bmk=50 mm
Diameter of bolts (double shear) db=20 mm
Provide 1 line/s of fasteners.
Provide 4 rows of fasteners in each line.
Supported beam end clearance ec=10 mm
Diameter of Flowdrill bolts db1=20 mm

Pitch of bolts p'=70 mm
No. of bolts in supporting memb bn1=8
As Tf ≤ Trhs (75 kN ≤ 108.07 kN), tie force within the tying capacity of the RHS column wall.

WEB CLEAT SUMMARY - BOLTS IN DOUBLE SHEAR

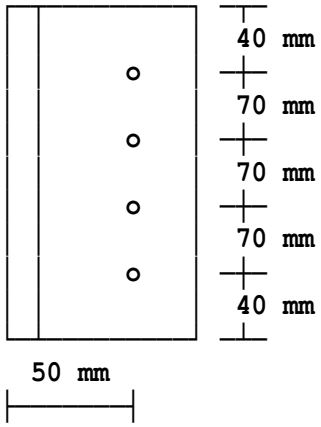

WEB CLEAT SUMMARY - BOLTS IN SINGLE SHEAR

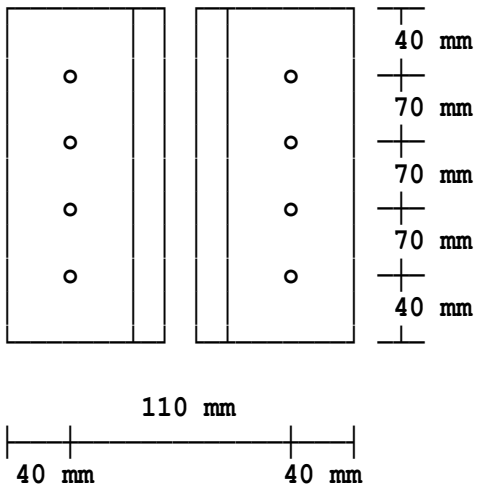

ANGLE DETAILS	**90 mm x 90 mm x 10 mm**	
SUMMARY	**Grade S 275**	
	Length of cleat	**290 mm**
LEGS CONNECTED	**Number of bolts/leg**	**4**
TO SUPPORTING	**Diameter of bolts**	**M 20 Flowdrill**
MEMBER	**Pitch**	**70 mm**
	End distance	**40 mm**
LEGS CONNECTED	**Number of bolts**	**4**
TO BEAM WEB	**Diameter of bolts**	**M 20 Grade 8.8**
	Pitch	**70 mm**
	End distance	**40 mm**

Location: Hollo-Bolt - Tie force

Double angle web cleat connection

Analysis of the connection follows the treatment in the BCSA publication entitled 'Manual on Connections Volume 1 - Joints in simple construction' amended to comply with the requirements of BS5950-1:2000.

Universal section beam to RHS column connection using standard bolts connecting the beam to the web cleats.
Hollo-Bolts will be utilised for connecting cleats to the column.
Structural integrity tie force Tf=75 kN

Supporting member details

250 x 250 x 12.5 SHS - Hot finished.
Properties (cm): A=117 rx=9.66 Zx=873 Sx=1040 Ix=10900 J=17200 C=1280

Supported beam details

406 x 178 x 74 UB.

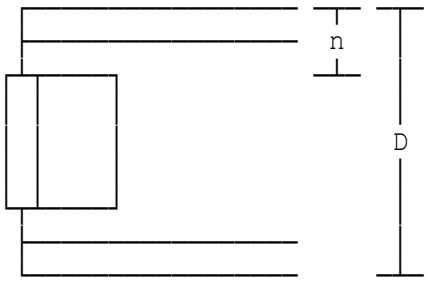

Distance top of beam/top of cleat n=50 mm

Thickness of angle cleats tp=10 mm
Length of angle cleat leg lc=90 mm
Backmark bmk=50 mm
Diameter of bolts (double shear) db=20 mm
Provide 1 line/s of fasteners.
Provide 4 rows of fasteners in each line.
Supported beam end clearance ec=10 mm
Diameter of Hollo-Bolts db1=16 mm

Pitch of bolts p'=70 mm
No. of bolts in supporting memb bn1=8
As Tf ≤ Trhs (75 kN ≤ 119.47 kN), tie force within the tying capacity of the RHS column wall.

WEB CLEAT SUMMARY - BOLTS IN DOUBLE SHEAR

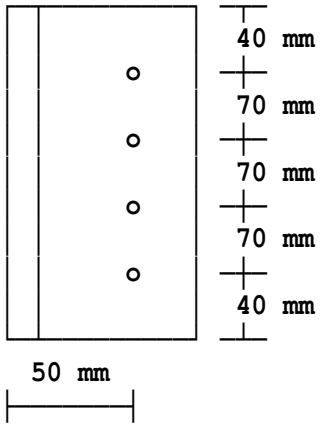

WEB CLEAT SUMMARY - BOLTS IN SINGLE SHEAR

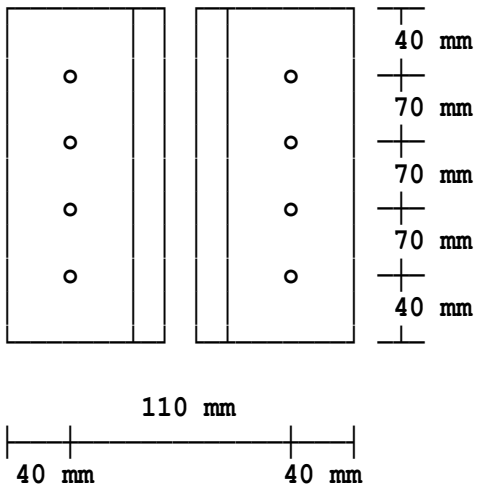

ANGLE DETAILS	**90 mm x 90 mm x 10 mm**	
SUMMARY	**Grade S 275**	
	Length of cleat	**290 mm**
LEGS CONNECTED	**Number of bolts/leg**	**4**
TO SUPPORTING	**Diameter of bolts**	**M 16 Hollo-Bolt**
MEMBER	**Pitch**	**70 mm**
	End distance	**40 mm**
LEGS CONNECTED	**Number of bolts**	**4**
TO BEAM WEB	**Diameter of bolts**	**M 20 Grade 8.8**
	Pitch	**70 mm**
	End distance	**40 mm**

Location: Ex8 - Double notch and with one line of bolts

Double angle web cleat connection

Analysis of the connection follows the treatment in the BCSA publication entitled 'Manual on Connections Volume 1 - Joints in simple construction' amended to comply with the requirements of BS5950-1:2000.

Universal section to universal section connection using standard bolts

Supporting member details

203 x 203 x 46 UC.
Thickness of connecting ply ts=7.2 mm

Supported beam details

203 x 203 x 52 UC.

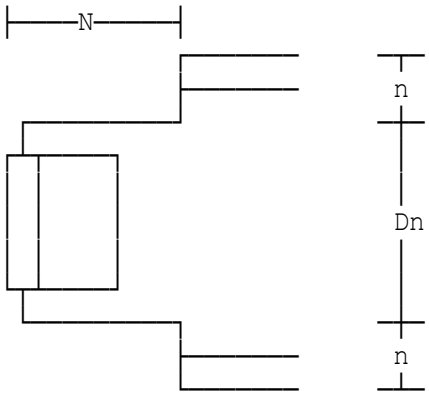

Length of notch to end face N=108 mm
Depth of notch n=24 mm
Thickness of angle cleats tp=8 mm
Length of angle cleat leg lc=90 mm
Backmark bmk=50 mm
Diameter of bolts (double shear) db=16 mm
Provide 1 line/s of fasteners.
Provide 3 rows of fasteners in each line.
Supported beam end clearance ec=3 mm
Diameter of bolts (single shear) db1=16 mm

Pitch of bolts p'=100 mm
No. of bolts in supporting memb bn1=4

To calculate the load on the outermost bolt due to moment, apply the unit area method. Function of inertia of bolt group:
Dimension et=29.1 mm

WEB CLEAT SUMMARY - BOLTS IN DOUBLE SHEAR

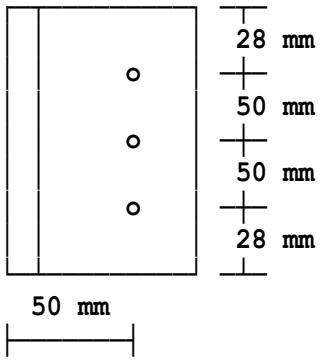

WEB CLEAT SUMMARY - BOLTS IN SINGLE SHEAR

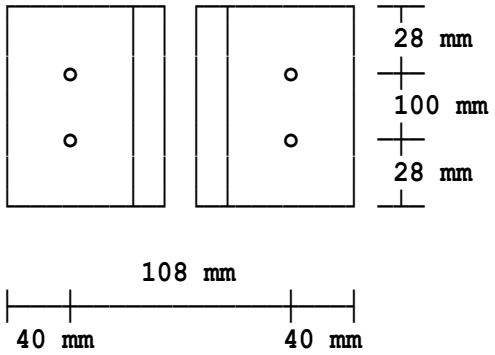

ANGLE DETAILS	**90 mm x 90 mm x 8 mm**	
SUMMARY	**Grade S 275**	
	Length of cleat	**156 mm**
LEGS CONNECTED	**Number of bolts/leg**	**2**
TO SUPPORTING	**Diameter of bolts**	**M 16 Grade 4.6**
MEMBER	**Pitch**	**100 mm**
	End distance	**28 mm**
LEGS CONNECTED	**Number of bolts**	**3**
TO BEAM WEB	**Diameter of bolts**	**M 16 Grade 4.6**
	Pitch	**50 mm**
	End distance	**40 mm**

Doubly notched beams - guidance should be sought on the effective length if unrestrained against lateral torsional buckling.

Location: Ex1 - From Steelwork Design Guide

Double angle web cleat connection

Analysis of the connection follows the treatment in the SCI publication P358 entitled 'Joints in Steel Construction: Simple Joints to EC3' and EC3 Part 1-8 (2005).

Universal section to universal section connection using standard bolts

Supporting member details

254 x 254 x 89 UKC
Thickness of connecting ply ts=17.3 mm

Supported beam details

533 x 210 x 92 UKB

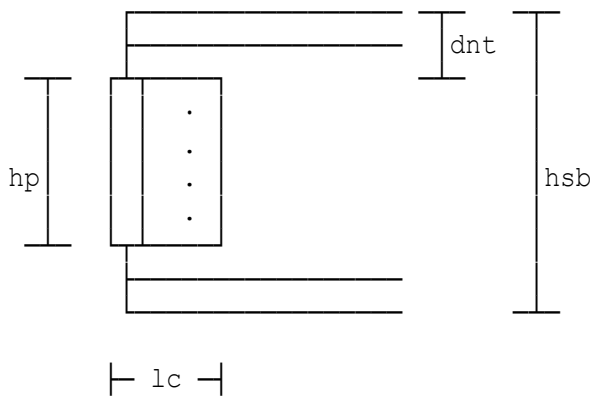

Distance top of beam/top of cleat dnt=40 mm

Thickness of angle cleats tp=10 mm
Length of angle cleat leg lc=90 mm
Distance to 1st line of bolts zp=60 mm
Diameter of bolts (double shear) db=20 mm
Provide 1 vertical line of fasteners.
Provide 8 rows of fasteners in each line.
Pitch of bolts p1=50 mm
End distance e1=35 mm
Supported beam end clearance gn=10 mm
Diameter of bolts (single shear) db1=20 mm

Pitch of bolts p1'=100 mm
No. of bolts in supporting memb bn1=8

To calculate the load on the outermost bolt due to moment, apply the unit area method. Function of inertia of bolt group:
Beam vertical edge distance e1b=75 mm

WEB CLEAT SUMMARY - BOLTS IN DOUBLE SHEAR

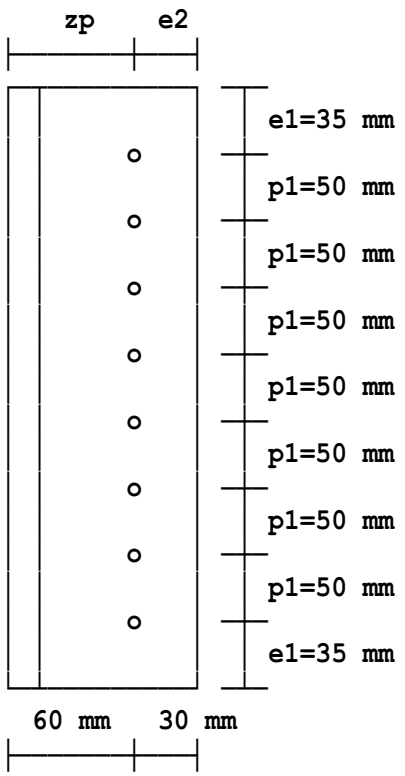

WEB CLEAT SUMMARY - BOLTS IN SINGLE SHEAR

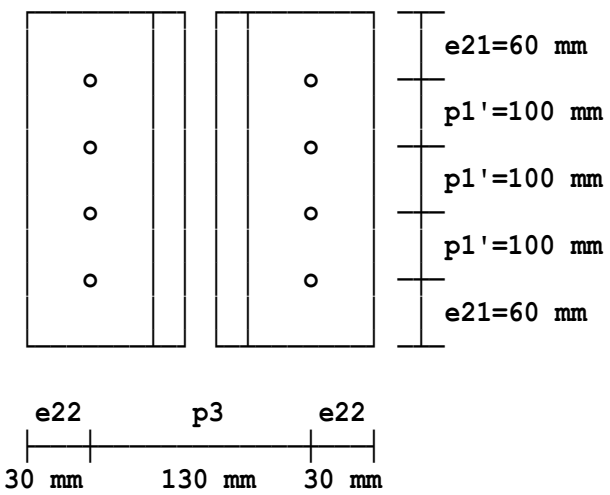

ANGLE DETAILS	**90 mm x 90 mm x 10 mm**	
SUMMARY	**Grade S 275**	
	Length of cleat	**420 mm**
LEGS CONNECTED	**Number of bolts/leg**	**4**
TO SUPPORTING	**Diameter of bolts**	**M 20 Grade 8.8**
MEMBER	**Pitch**	**100 mm**
	End distance	**60 mm**
LEGS CONNECTED	**Number of bolts**	**8**
TO BEAM WEB	**Diameter of bolts**	**M 20 Grade 8.8**
	Pitch	**50 mm**
	End distance	**30 mm**

Location: Ex2 - Joints publication Example 1 (2 lines of bolts)

Double angle web cleat connection

Analysis of the connection follows the treatment in the SCI publication P358 entitled 'Joints in Steel Construction: Simple Joints to EC3' and EC3 Part 1-8 (2005).

Universal section to universal section connection using standard bolts

Supporting member details

610 x 229 x 140 UKB
Thickness of connecting ply ts=13.1 mm

Supported beam details

406 x 178 x 74 UKB

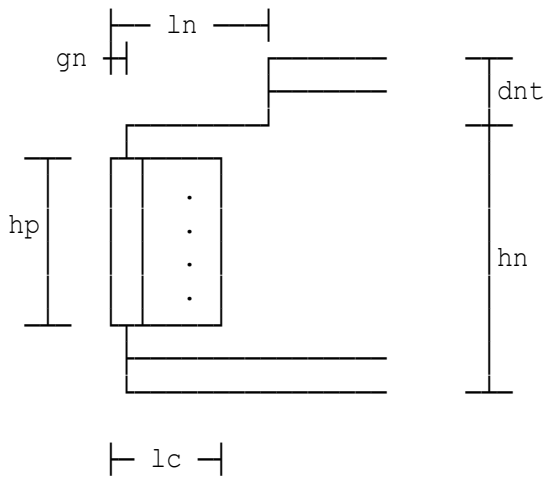

Length of notch to end face ln=120 mm
Depth of notch dnt=50 mm
Thickness of angle cleats tp=10 mm
Length of angle cleat long leg lc=150 mm
Length of angle cleat short leg lc'=90 mm
Distance to 1st line of bolts zp=50 mm
Diameter of bolts (double shear) db=20 mm
Provide 2 vertical lines of fasteners.
Provide 4 rows of fasteners in each line.
Pitch of bolts p1=70 mm
Horizontal bolt spacing p2=50 mm
End distance e1=40 mm
Supported beam end clearance gn=10 mm

Diameter of bolts (single shear) db1=20 mm

Pitch of bolts p1'=70 mm
No. of bolts in supporting memb bn1=8
To calculate the load on the outermost bolt due to moment, apply the unit area method. Function of inertia of bolt group:
Beam vertical edge distance e1b=90 mm

WEB CLEAT SUMMARY - BOLTS IN DOUBLE SHEAR

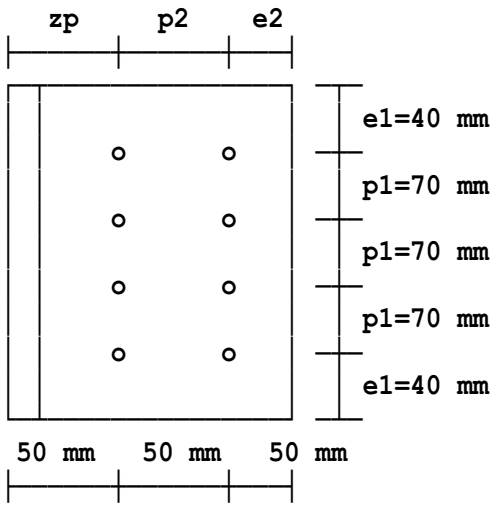

WEB CLEAT SUMMARY - BOLTS IN SINGLE SHEAR

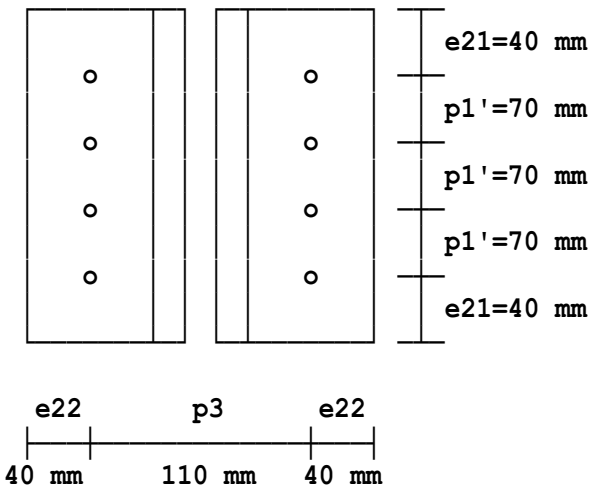

ANGLE DETAILS	**150 mm x 90 mm x 10 mm**	
SUMMARY	**Grade S 275**	
	Length of cleat	**290 mm**
LEGS CONNECTED	**Number of bolts/leg**	**4**
TO SUPPORTING	**Diameter of bolts**	**M 20 Grade 8.8**
MEMBER	**Pitch**	**70 mm**
	End distance	**40 mm**
LEGS CONNECTED	**Number of bolts**	**8**
TO BEAM WEB	**Diameter of bolts**	**M 20 Grade 8.8**
	Pitch	**70 mm**
	End distance	**50 mm**

Location: Ex3 - Joints publication Example 2 (Tie force)

Double angle web cleat connection

Analysis of the connection follows the treatment in the SCI publication P358 entitled 'Joints in Steel Construction: Simple Joints to EC3' and EC3 Part 1-8 (2005).

Universal section to universal section connection using standard bolts
Structural integrity tie force FEd=230 kN

Supporting member details

305 x 305 x 137 UKC
Thickness of connecting ply ts=13.8 mm

Supported beam details

406 x 178 x 74 UKB

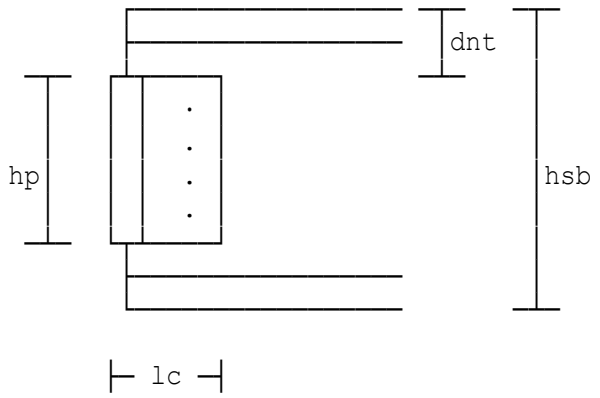

Distance top of beam/top of cleat dnt=50 mm

Thickness of angle cleats tp=10 mm
Length of angle cleat long leg lc=150 mm
Length of angle cleat short leg lc'=90 mm
Distance to 1st line of bolts zp=50 mm
Diameter of bolts (double shear) db=20 mm
Provide 2 vertical lines of fasteners.
Provide 4 rows of fasteners in each line.
Pitch of bolts p1=70 mm
Horizontal bolt spacing p2=50 mm
End distance e1=40 mm
Supported beam end clearance gn=10 mm
Diameter of bolts (single shear) db1=20 mm

Pitch of bolts	p1'=70 mm
No. of bolts in supporting memb	bn1=8
Diameter of bolt washer	dw=33 mm

WEB CLEAT SUMMARY - BOLTS IN DOUBLE SHEAR

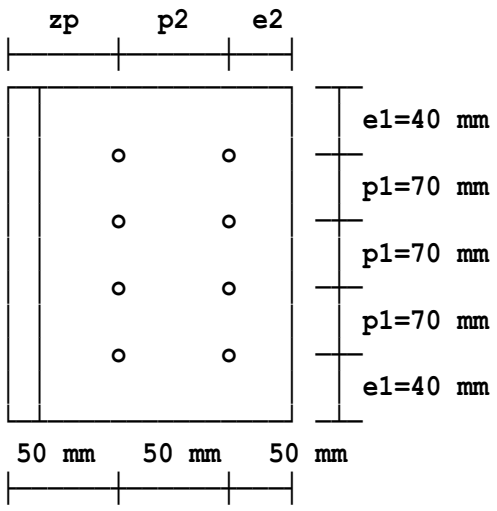

WEB CLEAT SUMMARY - BOLTS IN SINGLE SHEAR

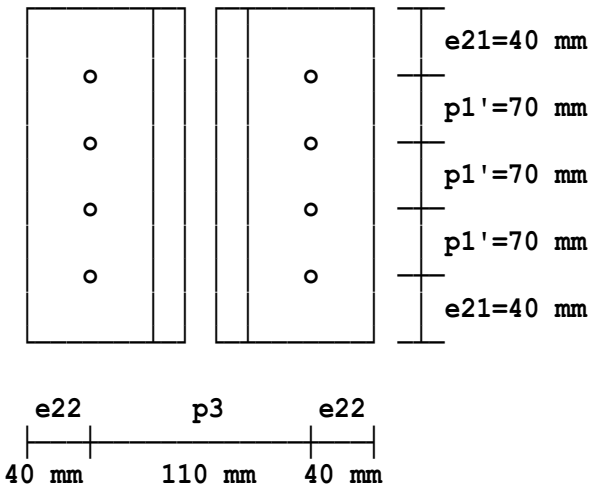

ANGLE DETAILS	**150 mm x 90 mm x 10 mm**	
SUMMARY	**Grade S 275**	
	Length of cleat	**290 mm**
LEGS CONNECTED	**Number of bolts/leg**	**4**
TO SUPPORTING	**Diameter of bolts**	**M 20 Grade 8.8**
MEMBER	**Pitch**	**70 mm**
	End distance	**40 mm**
LEGS CONNECTED	**Number of bolts**	**8**
TO BEAM WEB	**Diameter of bolts**	**M 20 Grade 8.8**
	Pitch	**70 mm**
	End distance	**50 mm**

Location: Ex4 - Using non-standard section (Tie force)

Double angle web cleat connection

Analysis of the connection follows the treatment in the SCI publication P358 entitled 'Joints in Steel Construction: Simple Joints to EC3' and EC3 Part 1-8 (2005).

Universal section to universal section connection using standard bolts
Structural integrity tie force FEd=175 kN

Supporting member details

Thickness of connecting ply ts=10 mm

Supported beam details

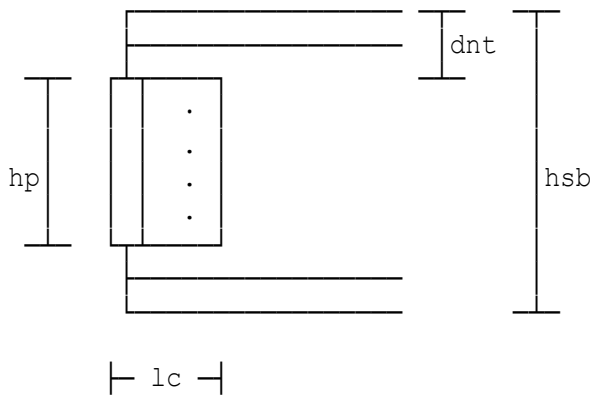

Distance top of beam/top of cleat dnt=50 mm

Thickness of angle cleats tp=10 mm
Length of angle cleat leg lc=90 mm
Distance to 1st line of bolts zp=60 mm
Diameter of bolts (double shear) db=20 mm
Provide 1 vertical line of fasteners.
Provide 8 rows of fasteners in each line.
Pitch of bolts p1=50 mm
End distance e1=35 mm
Supported beam end clearance gn=10 mm
Diameter of bolts (single shear) db1=20 mm

Pitch of bolts p1'=100 mm
No. of bolts in supporting memb bn1=8

To calculate the load on the outermost bolt due to moment, apply the unit area method. Function of inertia of bolt group:
Beam vertical edge distance e1b=85 mm
Diameter of bolt washer dw=33 mm

WEB CLEAT SUMMARY - BOLTS IN DOUBLE SHEAR

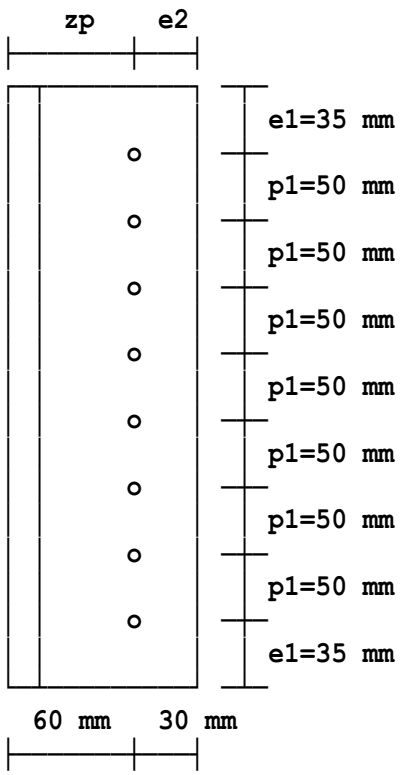

WEB CLEAT SUMMARY - BOLTS IN SINGLE SHEAR

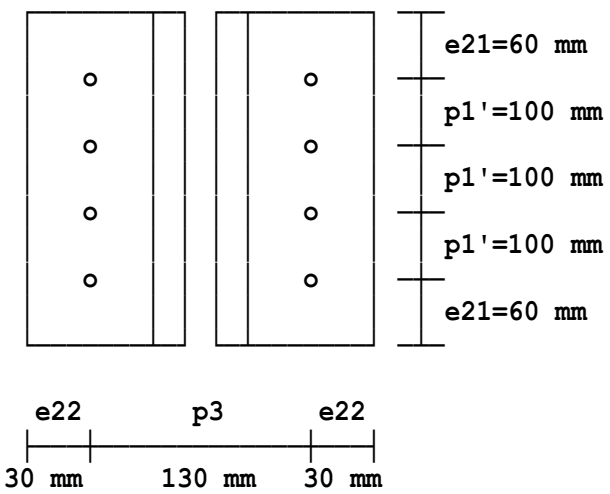

ANGLE DETAILS	**90 mm x 90 mm x 10 mm**	
SUMMARY	**Grade S 275**	
	Length of cleat	**420 mm**
LEGS CONNECTED	**Number of bolts/leg**	**4**
TO SUPPORTING	**Diameter of bolts**	**M 20 Grade 8.8**
MEMBER	**Pitch**	**100 mm**
	End distance	**60 mm**
LEGS CONNECTED	**Number of bolts**	**8**
TO BEAM WEB	**Diameter of bolts**	**M 20 Grade 8.8**
	Pitch	**50 mm**
	End distance	**30 mm**

Location: Ex5 - Using Flowdrill bolts

Double angle web cleat connection

Analysis of the connection follows the treatment in the SCI publication P358 entitled 'Joints in Steel Construction: Simple Joints to EC3' and EC3 Part 1-8 (2005).

Universal section beam to RHS column connection using standard bolts connecting the beam to the web cleats.
Flowdrill bolts will be utilised for connecting cleats to the column.

Supporting member details

250 x 250 x 10 SHS - Hot finished.
Properties (cm): A=94.9 iy=9.77 Wely=724 Wply=851 Iy=9060 It=14100
Wt=1070

Supported beam details

406 x 178 x 74 UKB

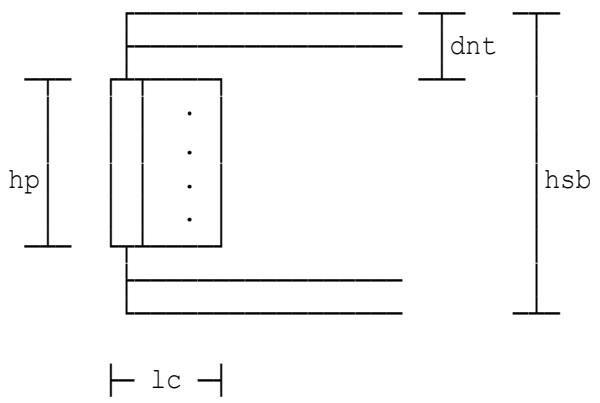

Distance top of beam/top of cleat dnt=50 mm

Thickness of angle cleats	tp=10 mm
Length of angle cleat long leg	lc=150 mm
Length of angle cleat short leg	lc'=90 mm
Distance to 1st line of bolts	zp=50 mm
Diameter of bolts (double shear)	db=20 mm

Provide 2 vertical lines of fasteners.
Provide 4 rows of fasteners in each line.

Pitch of bolts	p1=70 mm
Horizontal bolt spacing	p2=50 mm
End distance	e1=40 mm
Supported beam end clearance	gn=10 mm

Diameter of Flowdrill bolts db1=20 mm

Pitch of bolts p1'=70 mm
No. of bolts in supporting memb bn1=8
To calculate the load on the outermost bolt due to moment, apply the unit area method. Function of inertia of bolt group:
Beam vertical edge distance e1b=90 mm

WEB CLEAT SUMMARY - BOLTS IN DOUBLE SHEAR

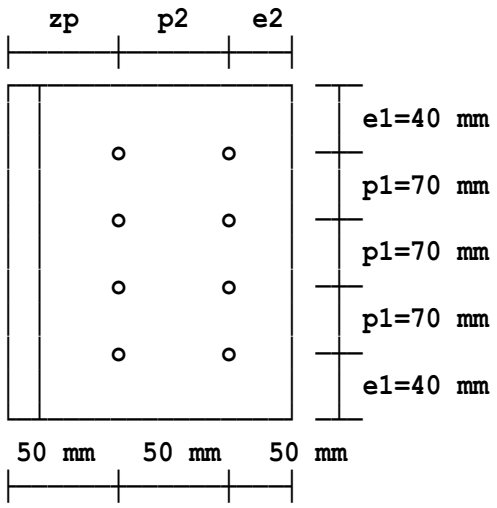

WEB CLEAT SUMMARY - BOLTS IN SINGLE SHEAR

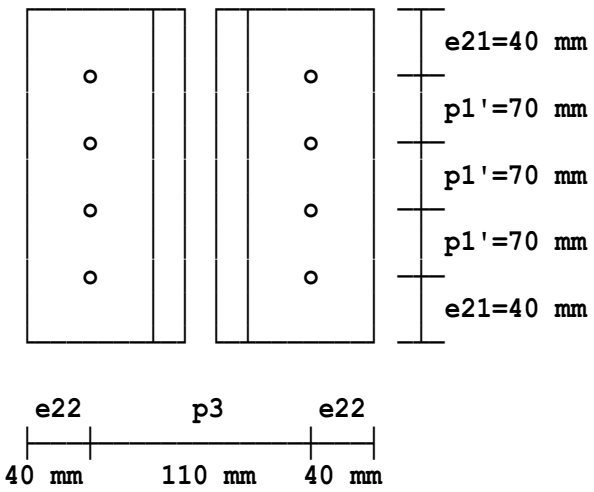

ANGLE DETAILS	**150 mm x 90 mm x 10 mm**	
SUMMARY	**Grade S 275**	
	Length of cleat	**290 mm**
LEGS CONNECTED	**Number of bolts/leg**	**4**
TO SUPPORTING	**Diameter of bolts**	**M 20 Flowdrill**
MEMBER	**Pitch**	**70 mm**
	End distance	**40 mm**
LEGS CONNECTED	**Number of bolts**	**8**
TO BEAM WEB	**Diameter of bolts**	**M 20 Grade 8.8**
	Pitch	**70 mm**
	End distance	**50 mm**

Location: Ex6 - Using Flowdrill bolts (Tie force)

Double angle web cleat connection

Analysis of the connection follows the treatment in the SCI publication P358 entitled 'Joints in Steel Construction: Simple Joints to EC3' and EC3 Part 1-8 (2005).

Universal section beam to RHS column connection using standard bolts connecting the beam to the web cleats.
Flowdrill bolts will be utilised for connecting cleats to the column.
Structural integrity tie force FEd=75 kN

Supporting member details

250 x 250 x 12.5 SHS - Hot finished.
Properties (cm): A=117 iy=9.66 Wely=873 Wply=1040 Iy=10900 It=17200
Wt=1280

Supported beam details

406 x 178 x 74 UKB

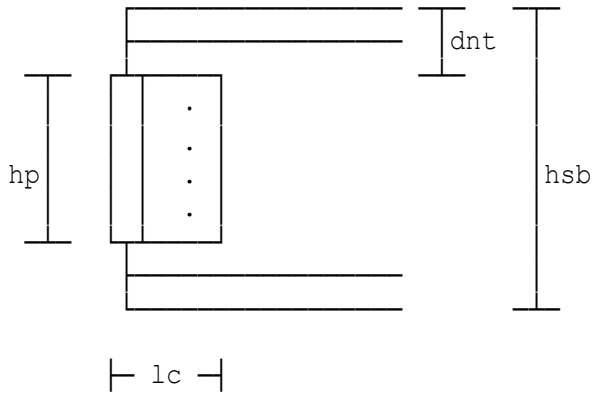

Distance top of beam/top of cleat dnt=50 mm

Thickness of angle cleats tp=10 mm
Length of angle cleat leg lc=90 mm
Distance to 1st line of bolts zp=50 mm
Diameter of bolts (double shear) db=20 mm
Provide 1 vertical line of fasteners.
Provide 4 rows of fasteners in each line.
Pitch of bolts p1=70 mm
End distance e1=40 mm
Supported beam end clearance gn=10 mm

Diameter of Flowdrill bolts db1=20 mm

Pitch of bolts p1'=70 mm
No. of bolts in supporting memb bn1=8
As FEd ≤ FRdu (75 kN ≤ 108.07 kN), tie force is within the tying resistance of the RHS column wall.
Diameter of bolt washer dw=33 mm

WEB CLEAT SUMMARY - BOLTS IN DOUBLE SHEAR

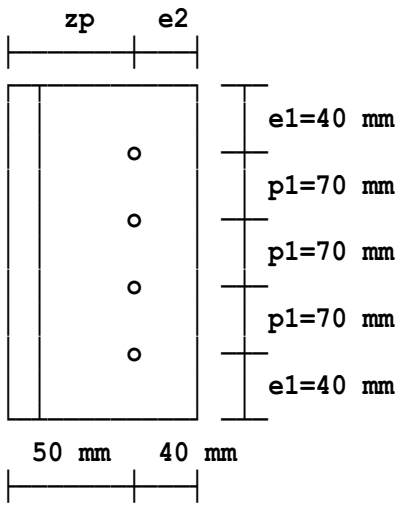

WEB CLEAT SUMMARY - BOLTS IN SINGLE SHEAR

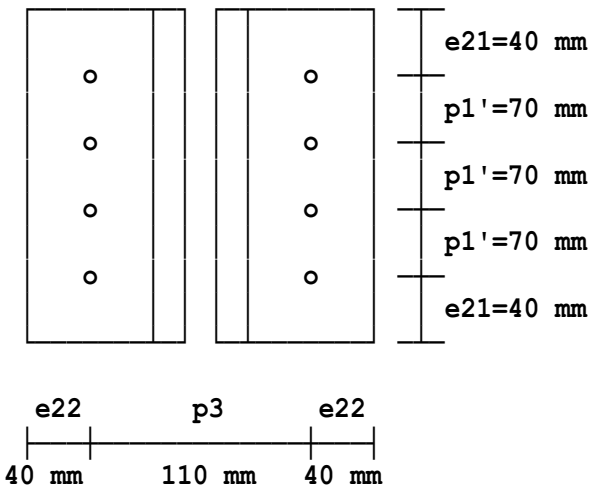

ANGLE DETAILS	**90 mm x 90 mm x 10 mm**	
SUMMARY	**Grade S 275**	
	Length of cleat	**290 mm**
LEGS CONNECTED	**Number of bolts/leg**	**4**
TO SUPPORTING	**Diameter of bolts**	**M 20 Flowdrill**
MEMBER	**Pitch**	**70 mm**
	End distance	**40 mm**
LEGS CONNECTED	**Number of bolts**	**4**
TO BEAM WEB	**Diameter of bolts**	**M 20 Grade 8.8**
	Pitch	**70 mm**
	End distance	**40 mm**

Location: Ex7 - Using Hollo-Bolt (Tie force)

Double angle web cleat connection

Analysis of the connection follows the treatment in the SCI publication P358 entitled 'Joints in Steel Construction: Simple Joints to EC3' and EC3 Part 1-8 (2005).

Universal section beam to RHS column connection using standard bolts connecting the beam to the web cleats.
Hollo-Bolts will be utilised for connecting cleats to the column.
Structural integrity tie force FEd=75 kN

Supporting member details

250 x 250 x 12.5 SHS - Hot finished.
Properties (cm): A=117 iy=9.66 Wely=873 Wply=1040 Iy=10900 It=17200
Wt=1280

Supported beam details

406 x 178 x 74 UKB

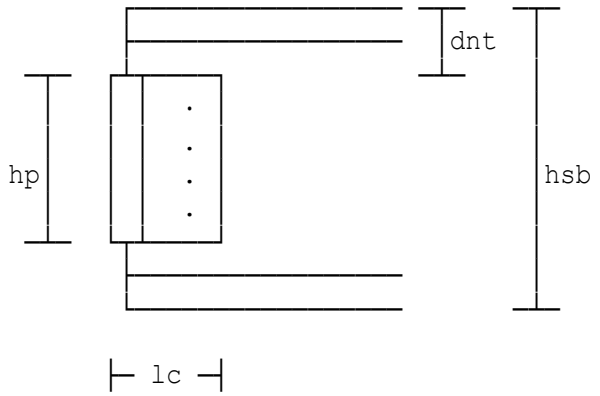

Distance top of beam/top of cleat dnt=50 mm

Thickness of angle cleats tp=10 mm
Length of angle cleat leg lc=90 mm
Distance to 1st line of bolts zp=50 mm
Diameter of bolts (double shear) db=20 mm
Provide 1 vertical line of fasteners.
Provide 4 rows of fasteners in each line.
Pitch of bolts p1=70 mm
End distance e1=40 mm
Supported beam end clearance gn=10 mm

Diameter of Hollo-Bolts db1=16 mm

Pitch of bolts p1'=70 mm
No. of bolts in supporting memb bn1=8
As FEd ≤ FRdu (75 kN ≤ 118.82 kN), tie force is within the tying resistance of the RHS column wall.
Diameter of bolt washer dw=46 mm

WEB CLEAT SUMMARY - BOLTS IN DOUBLE SHEAR

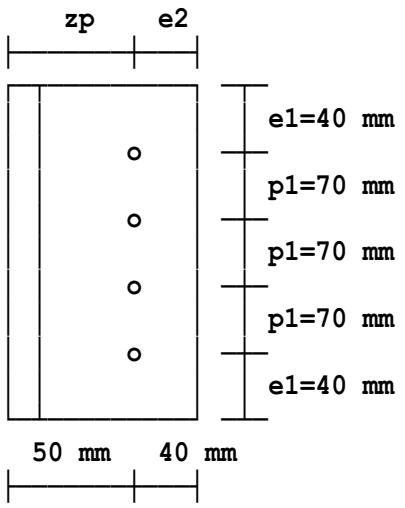

WEB CLEAT SUMMARY - BOLTS IN SINGLE SHEAR

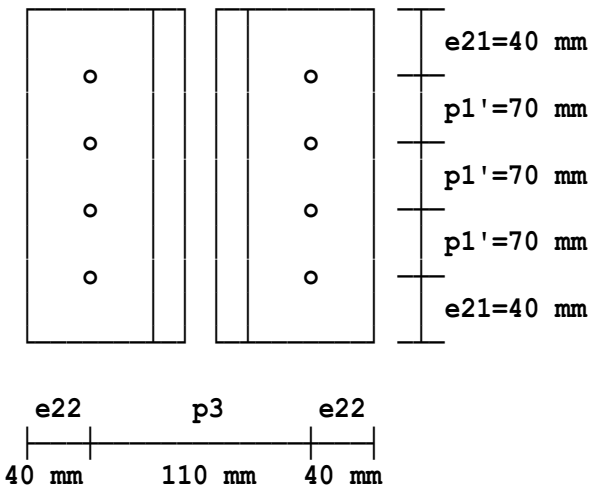

ANGLE DETAILS	**90 mm x 90 mm x 10 mm**	
SUMMARY	**Grade S 275**	
	Length of cleat	**290 mm**
LEGS CONNECTED	**Number of bolts/leg**	**4**
TO SUPPORTING	**Diameter of bolts**	**M 16 Hollo-Bolt**
MEMBER	**Pitch**	**70 mm**
	End distance	**40 mm**
LEGS CONNECTED	**Number of bolts**	**4**
TO BEAM WEB	**Diameter of bolts**	**M 20 Grade 8.8**
	Pitch	**70 mm**
	End distance	**40 mm**

Location: Ex8 - As Ex2 but with unrestrained flange for LTB

Double angle web cleat connection

Analysis of the connection follows the treatment in the SCI publication P358 entitled 'Joints in Steel Construction: Simple Joints to EC3' and EC3 Part 1-8 (2005).

Universal section to universal section connection using standard bolts

Supporting member details

610 x 229 x 140 UKB
Thickness of connecting ply ts=13.1 mm

Supported beam details

406 x 178 x 74 UKB

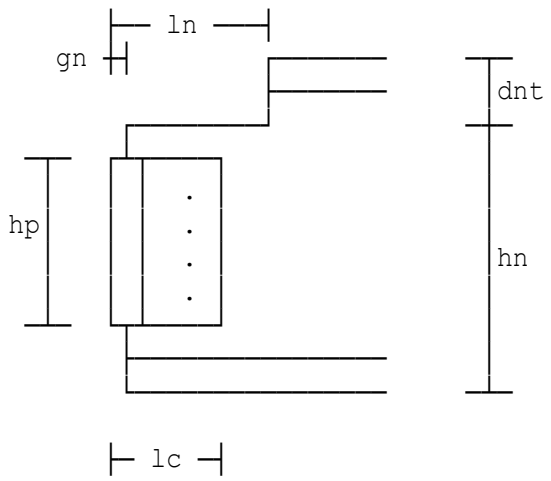

Length of notch to end face ln=120 mm
Depth of notch dnt=50 mm
Thickness of angle cleats tp=10 mm
Length of angle cleat long leg lc=150 mm
Length of angle cleat short leg lc'=90 mm
Distance to 1st line of bolts zp=50 mm
Diameter of bolts (double shear) db=20 mm
Provide 2 vertical lines of fasteners.
Provide 4 rows of fasteners in each line.
Pitch of bolts p1=70 mm
Horizontal bolt spacing p2=50 mm
End distance e1=40 mm
Supported beam end clearance gn=10 mm

Diameter of bolts (single shear) db1=20 mm

Pitch of bolts p1'=70 mm
No. of bolts in supporting memb bn1=8
To calculate the load on the outermost bolt due to moment, apply the unit area method. Function of inertia of bolt group:
Beam vertical edge distance e1b=90 mm
Length between restraints Lb=5000 mm

WEB CLEAT SUMMARY - BOLTS IN DOUBLE SHEAR

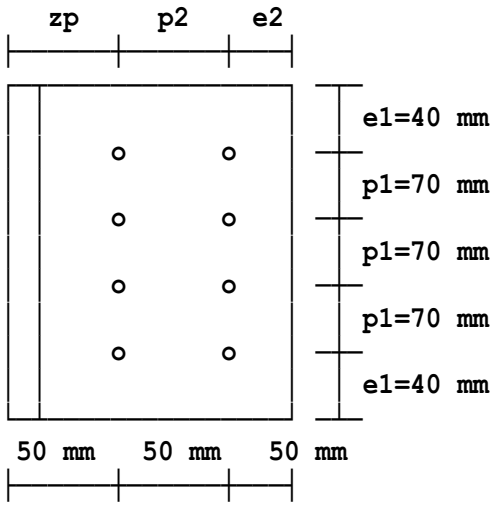

WEB CLEAT SUMMARY - BOLTS IN SINGLE SHEAR

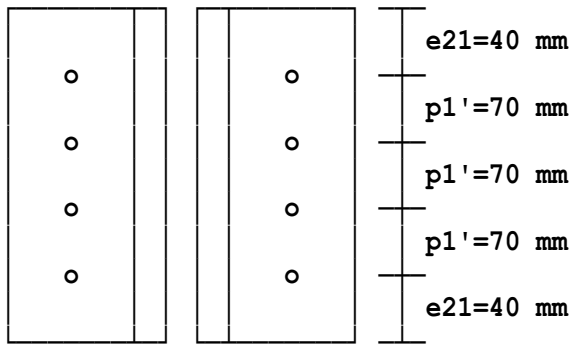

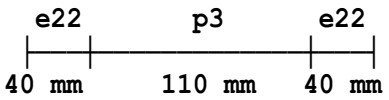

ANGLE DETAILS	**150 mm x 90 mm x 10 mm**	
SUMMARY	**Grade S 275**	
	Length of cleat	**290 mm**
LEGS CONNECTED	**Number of bolts/leg**	**4**
TO SUPPORTING	**Diameter of bolts**	**M 20 Grade 8.8**
MEMBER	**Pitch**	**70 mm**
	End distance	**40 mm**
LEGS CONNECTED	**Number of bolts**	**8**
TO BEAM WEB	**Diameter of bolts**	**M 20 Grade 8.8**
	Pitch	**70 mm**
	End distance	**50 mm**

Location: Joints publication. Fin plates Example 1

Standard grade 8.8 bolts will be used with this fin plate connection.

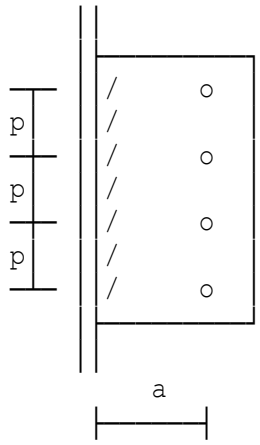

Fin plate connection

Calculations are in accordance with BS 5950-1:2000 and the analysis follows the recommended design procedure checks given in the BCSA/SCI publication 'Joints in Simple Construction' 2nd Edition.

Grade 8.8 bolts used in clearance holes.

Beam to beam web connection.

Factored end reaction	Q=350 kN
610 x 229 x 140 UKB	
available for shear and bearing	ts=13.1 mm
533 x 210 x 92 UKB	
Length of notch to end face	N=120 mm
Depth of notch	n=50 mm
Thickness of fin plate	tf=10 mm
Diameter of bolts	db=20 mm
Pitch of bolts vertically	p=70 mm
Vertical edge distance	e1=40 mm
Horizontal edge distance	e2=40 mm
Cross-centres of bolts	g=50 mm
Dimension	a=50 mm
Supported beam end clearance	ec=10 mm
Weld leg length	s=8 mm

FIN PLATE SUMMARY

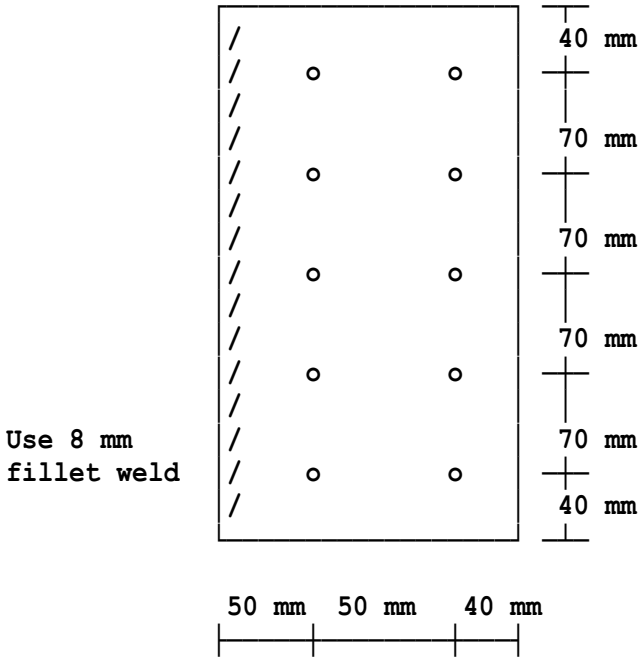

Plate size 360 mm x 140 mm x 10 mm
Grade S 275
Number of bolts 10
Diameter of bolts M 20 Grade 8.8
Fillet weld size 8 mm
Electrode strength Es 35

Location: Joints publication. Fin plates Example 2

Standard grade 8.8 bolts will be used with this fin plate connection.

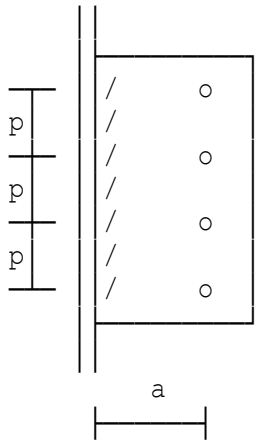

Fin plate connection

Calculations are in accordance with BS 5950-1:2000 and the analysis follows the recommended design procedure checks given in the BCSA/SCI publication 'Joints in Simple Construction' 2nd Edition.

Grade 8.8 bolts used in clearance holes.

Beam to column flange connection.

Structural integrity tie force	Tf=175 kN
305 x 305 x 137 UKC	
406 x 178 x 74 UKB	
Thickness of fin plate	tf=10 mm
Diameter of bolts	db=20 mm
Pitch of bolts vertically	p=70 mm
Vertical edge distance	e1=40 mm
Horizontal edge distance	e2=50 mm
Eccentricity of bolt group	a=50 mm
Supported beam end clearance	ec=10 mm
Weld leg length	s=8 mm

FIN PLATE SUMMARY

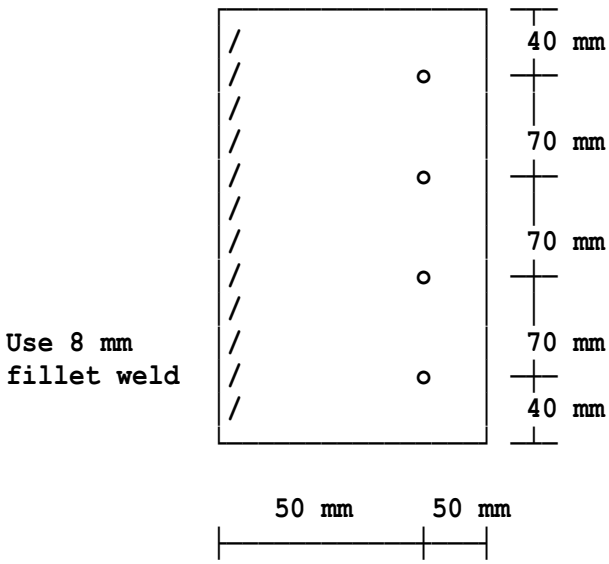

Plate size 290 mm x 100 mm x 10 mm
Grade S 275
Number of bolts 4
Diameter of bolts M 20 Grade 8.8
Fillet weld size 8 mm
Electrode strength Es 35

Location: Joints publication Ex 1 smaller beam connection

Standard grade 8.8 bolts will be used with this fin plate connection.

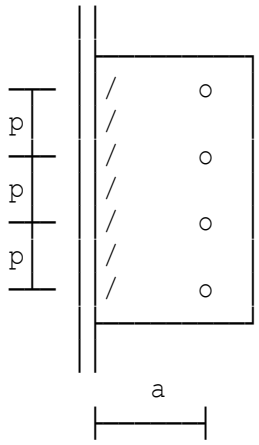

Fin plate connection

Calculations are in accordance with BS 5950-1:2000 and the analysis follows the recommended design procedure checks given in the BCSA/SCI publication 'Joints in Simple Construction' 2nd Edition.

Grade 8.8 bolts used in clearance holes.

Beam to beam web connection.

Factored end reaction	Q=200 kN
610 x 229 x 140 UKB	
available for shear and bearing	ts=13.1 mm
406 x 178 x 74 UKB	
Length of notch to end face	N=120 mm
Depth of notch	n=50 mm
Thickness of fin plate	tf=10 mm
Diameter of bolts	db=20 mm
Pitch of bolts vertically	p=70 mm
Vertical edge distance	e1=40 mm
Horizontal edge distance	e2=50 mm
Eccentricity of bolt group	a=50 mm
Supported beam end clearance	ec=10 mm
Weld leg length	s=8 mm
Length of supported beam	Lb=3500 mm

Effective length of supported beam

As supported notched beam is unrestrained it must be checked for torsional buckling in accordance with BS 5950 pt.1 Clause 4.3.

Length between restraints	Lb=3500 mm
Rounding value, consider	Le =1.29 Lb

Check supported beam for lateral torsional buckling using a value of 1.29 Lb as the effective length.

FIN PLATE SUMMARY

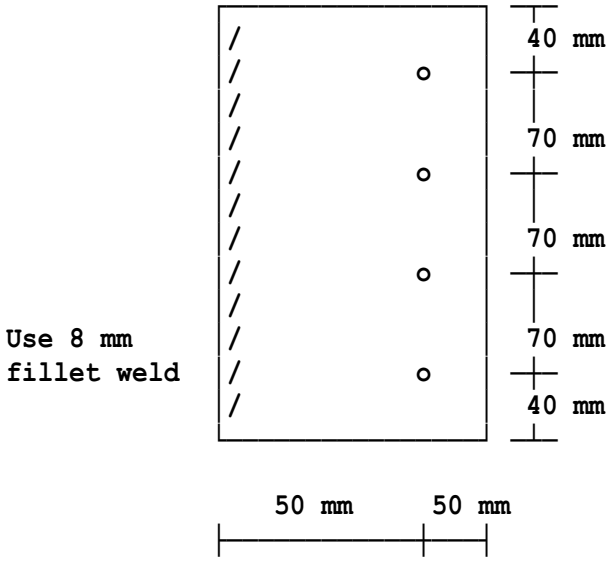

Plate size 290 mm x 100 mm x 10 mm
Grade S 275
Number of bolts 4
Diameter of bolts M 20 Grade 8.8
Fillet weld size 8 mm
Electrode strength Es 35

Location: non-standard section example (extended fin plate)

Standard grade 8.8 bolts will be used with this fin plate connection.

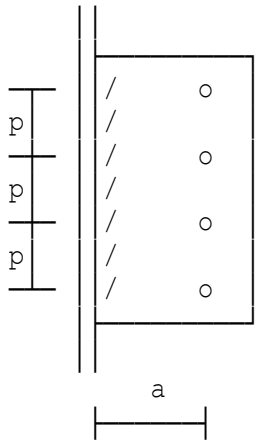

Fin plate connection

Calculations are in accordance with BS 5950-1:2000 and the analysis follows the recommended design procedure checks given in the BCSA/SCI publication 'Joints in Simple Construction' 2nd Edition.

Grade 8.8 bolts used in clearance holes.

Beam to column web connection.

Structural integrity tie force	Tf=180 kN
available for shear and bearing	ts=13 mm
Thickness of fin plate	tf=10 mm
Diameter of bolts	db=20 mm
Pitch of bolts vertically	p=60 mm
Vertical edge distance	e1=40 mm
Horizontal edge distance	e2=50 mm
Eccentricity of bolt group	a=160 mm
Supported beam end clearance	ec=120 mm
Weld leg length	s=8 mm

FIN PLATE SUMMARY

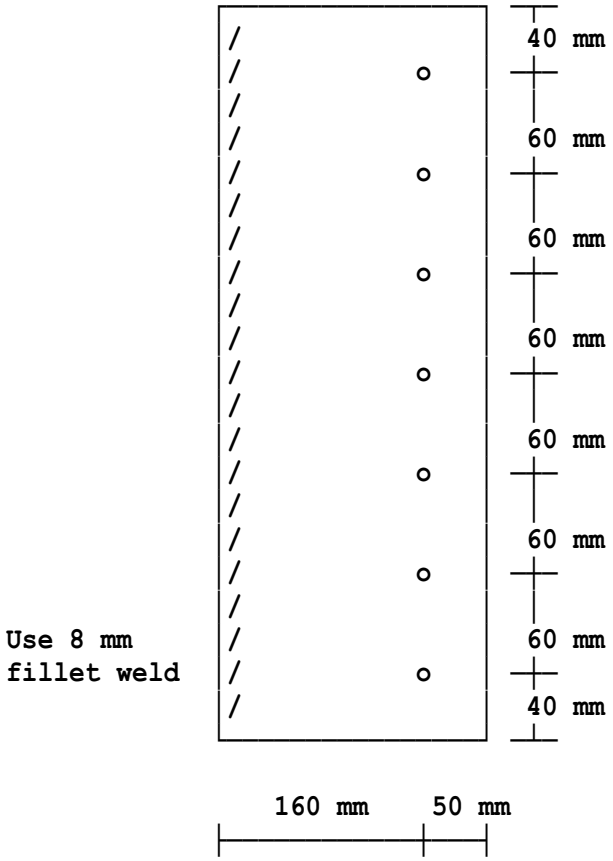

Plate size 440 mm x 210 mm x 10 mm
Grade S 275
Number of bolts 7
Diameter of bolts M 20 Grade 8.8
Fillet weld size 8 mm
Electrode strength Es 35

Location: Beam to column web connection, 610UB section

Standard grade 8.8 bolts will be used with this fin plate connection.

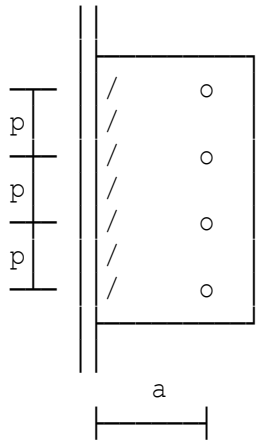

Fin plate connection

Calculations are in accordance with BS 5950-1:2000 and the analysis follows the recommended design procedure checks given in the BCSA/SCI publication 'Joints in Simple Construction' 2nd Edition.

Grade 8.8 bolts used in clearance holes.

Beam to column web connection.

Structural integrity tie force	Tf=200 kN
203 x 203 x 86 UKC	
available for shear and bearing	ts=12.7 mm
610 x 305 x 238 UKB	
Thickness of fin plate	tf=10 mm
Diameter of bolts	db=20 mm
Pitch of bolts vertically	p=70 mm
Vertical edge distance	e1=40 mm
Horizontal edge distance	e2=40 mm
Eccentricity of bolt group	a=50 mm
Supported beam end clearance	ec=10 mm
Weld leg length	s=8 mm

FIN PLATE SUMMARY

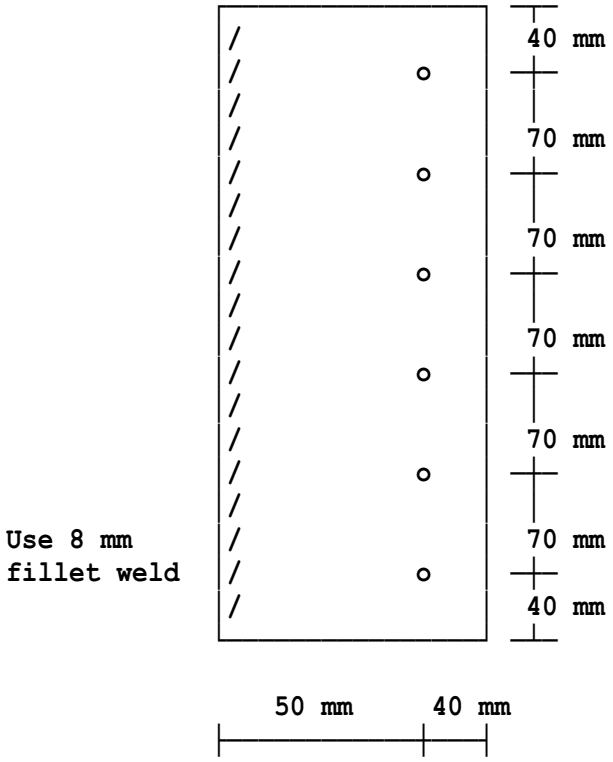

Plate size 430 mm x 90 mm x 10 mm
Grade S 275
Number of bolts 6
Diameter of bolts M 20 Grade 8.8
Fillet weld size 8 mm
Electrode strength Es 35

Location: Ex1 - Fin plate supporting an I section beam

Standard grade 8.8 bolts will be used with this fin plate connection.

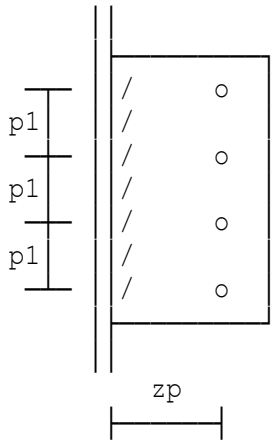

Fin plate connection

Calculations are in accordance with BS EN 1993-1:2005 and the analysis follows the recommended design procedure checks given in the BCSA/SCI publication 'Joints in Steel Construction: Simple Joints to EC3'. Grade 8.8 bolts used in clearance holes.

Beam to beam web connection.

Factored end reaction	VEd=350 kN
610 x 229 x 140 UKB	
available for shear and bearing	ts=13.1 mm
533 x 210 x 92 UKB	
Length of notch to end face	ln=120 mm
Depth of notch	dnt=50 mm
Thickness of fin plate	tp=10 mm
Diameter of bolts	db=20 mm
Vertical edge distance	e1=45 mm
Horizontal edge distance	e2=50 mm
Distance to 1st vert. bolt line	zp=50 mm
Bolt pitch vertically	p1=70 mm
Cross-centres of bolts	p2=60 mm
Supported beam end clearance	gn=10 mm
Beam vertical edge distance	e1b=90 mm
Length between restraints	Lb=5000 mm

Check supported beam for lateral torsional buckling using a value of 1.21 Lb as the effective length.

Weld leg length	s=8 mm

FIN PLATE SUMMARY

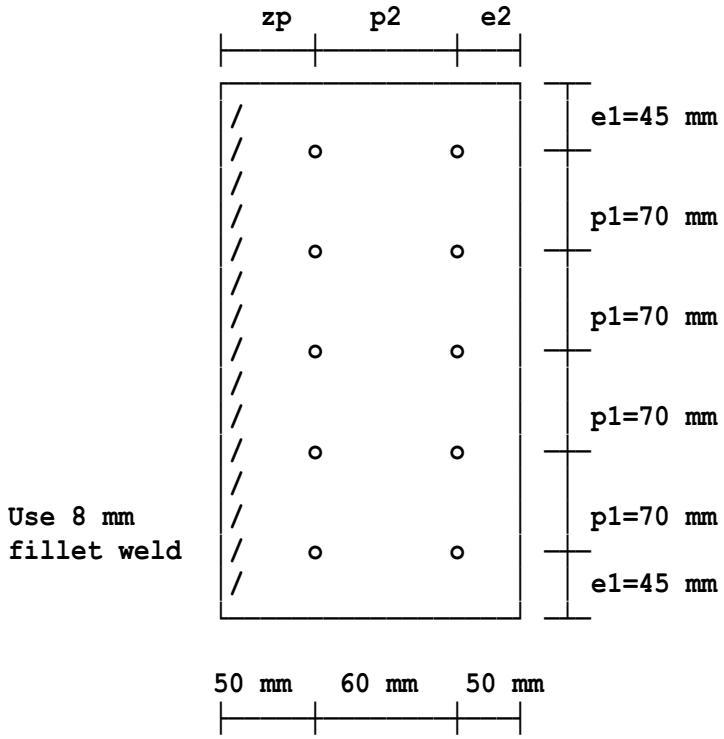

Plate size 370 mm x 160 mm x 10 mm
Grade S 275
Number of bolts 10
Diameter of bolts M 20 Grade 8.8
Fillet weld size 8 mm

Location: Ex2 - Fin plate supporting an I section beam

Standard grade 8.8 bolts will be used with this fin plate connection.

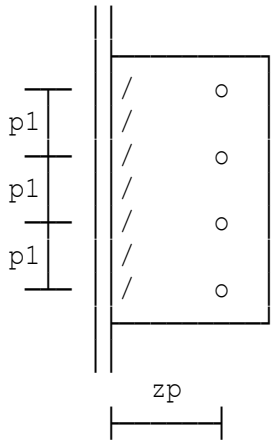

Fin plate connection

Calculations are in accordance with BS EN 1993-1:2005 and the analysis follows the recommended design procedure checks given in the BCSA/SCI publication 'Joints in Steel Construction: Simple Joints to EC3'. Grade 8.8 bolts used in clearance holes.

Beam to column web connection.

Structural integrity tie force	FEd=175 kN
305 x 305 x 137 UKC	
available for shear and bearing	ts=13.8 mm
406 x 178 x 74 UKB	
Thickness of fin plate	tp=10 mm
Diameter of bolts	db=20 mm
Vertical edge distance	e1=45 mm
Horizontal edge distance	e2=50 mm
Distance to 1st vert. bolt line	zp=50 mm
Bolt pitch vertically	p1=70 mm
Supported beam end clearance	gn=10 mm
Weld leg length	s=8 mm

FIN PLATE SUMMARY

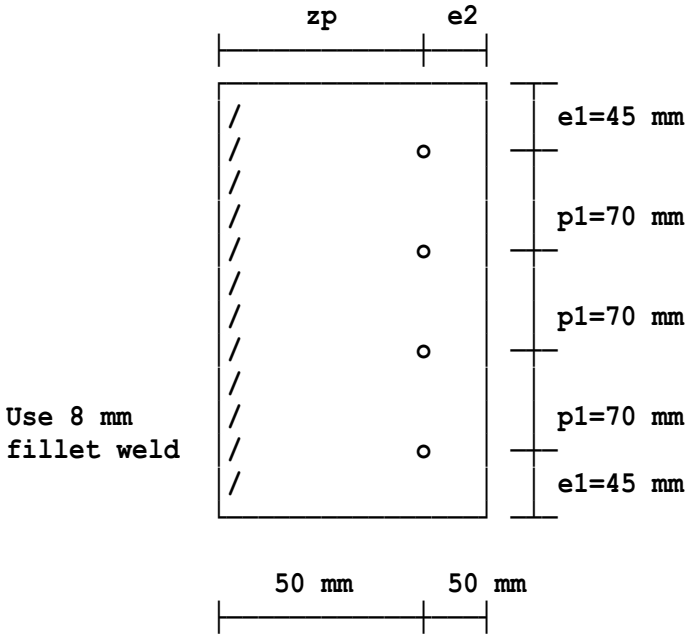

Plate size 300 mm x 100 mm x 10 mm
Grade S 275
Number of bolts 4
Diameter of bolts M 20 Grade 8.8
Fillet weld size 8 mm

Copyright 1986-2024 Fitzroy Systems Ltd.

Location: Ex3 - Supporting member is a SHS column

Standard grade 8.8 bolts will be used with this fin plate connection.

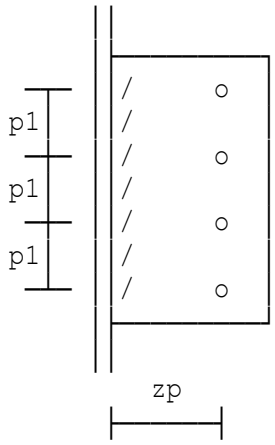

Fin plate connection

Calculations are in accordance with BS EN 1993-1:2005 and the analysis follows the recommended design procedure checks given in the BCSA/SCI publication 'Joints in Steel Construction: Simple Joints to EC3'. Grade 8.8 bolts used in clearance holes.

Beam to RHS column connection.

Factored end reaction	VEd=350 kN

300 x 300 x 10 SHS - Hot finished.
Properties (cm): A=115 iy=11.8 Wely=1070 Wply=1250 Iy=16000 It=24800 Wt=1580
457 x 191 x 67 UKB

Thickness of fin plate	tp=10 mm
Diameter of bolts	db=20 mm
Vertical edge distance	e1=50 mm
Horizontal edge distance	e2=50 mm
Distance to 1st vert. bolt line	zp=50 mm
Bolt pitch vertically	p1=70 mm
Supported beam end clearance	gn=10 mm
Beam vertical edge distance	e1b=90 mm
Weld leg length	s=10 mm

FIN PLATE SUMMARY

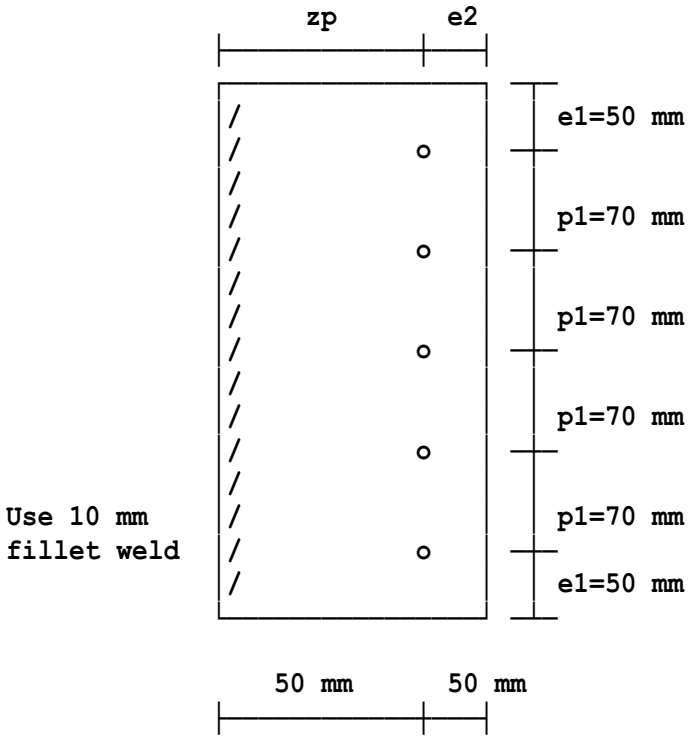

Plate size 380 mm x 100 mm x 10 mm
Grade S 275
Number of bolts 5
Diameter of bolts M 20 Grade 8.8
Fillet weld size 10 mm

Location: Example 8.3.1, 'Manual on Connections'

Seating bracket

The analysis of the connection is based on the procedure used in the BCSA publication 'Manual on connections'. Standard angle section is used for the seating bracket.

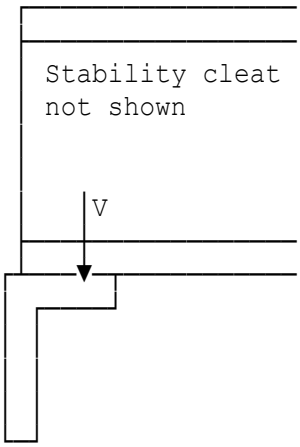

Stability cleat not shown

Calculations are in accordance with BS5950-1:2000 Section 6.

Factored vertical load on bracket V=254 kN
150 x 90 x 10 mm Unequal Angle.

Bolt group connecting the angle seat to supporting member

Diameter of bolts	db=20 mm
Number of bolts to be used	bn=4

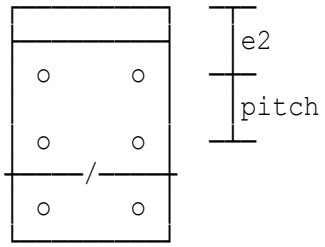

Pitch of bolts vertically	pitch=55 mm
End distance	e2=55 mm
Clearance hole diameter	Dh=db+2=22 mm

Column details

254 x 254 x 73 UC.

Supported beam details

533 x 210 x 92 UB.

Bearing strength of the seating bracket

This is investigated at the root of the angle seat. A 45 degree load dispersion from the supported beam root is used.
Dispersion length at U/S of beam Tus=Tc+T+r=37.6 mm
Dispersion length at seat root Leb=2*Tus+tc+1.172*rc=100.18 mm
Length of seating bracket ls=120 mm
Dispersion length less than seat length.
As V ≤ Pcr (254 kN ≤ 275.51 kN), shear force within bearing capacity at root of seat.

Hence the design of the seating bracket connection is OK.

SEATING BRACKET	**150 mm x 90 mm x 10 mm Angle**	
SUMMARY	**Grade S 275 x 120 mm long**	
LEG CONNECTED	**Number of bolts**	**4**
TO SUPPORTING	**Diameter of bolts**	**M 20 Grade 8.8**
MEMBER	**Pitch vertically**	**55 mm**
	End distance e2	**55 mm**
SUPPORTED BEAM	**533 x 210 x 92 UB**	
END DETAILS	**End clearance**	**6 mm**
	Bearing length 'b1'	**23 mm**
	Applied flange force	**254 kN**
	Local web capacity	**221 kN**
	Web buckling capacity	**148 kN**
	Bearing stiffeners are required.	
SUPPORTING COLUMN	**254 x 254 x 73 UC**	

Location: Welded connection

Seating bracket

The analysis of the connection is based on the procedure used in the BCSA publication 'Manual on connections'. Standard angle section is used for the seating bracket.

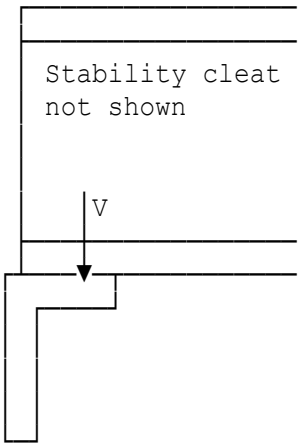

Stability cleat not shown

Calculations are in accordance with BS5950-1:2000 Section 6.

Factored vertical load on bracket V=156 kN
Fillet weld leg length s=6 mm
150 x 90 x 10 mm Unequal Angle.

Weld connecting seat to supporting member

Design strength of weld per mm pw=0.7*s*pw=924 N/mm
Total value of end plate weld Pw=le*pw/1000=266.11 kN
Since V ≤ Pw (156 kN ≤ 266.11 kN), shear on bracket is within allowable and the 6 mm fillet weld is suitable.

Supported beam details

457 x 152 x 67 UB.

Bearing strength of the seating bracket

This is investigated at the root of the angle seat. A 45 degree load dispersion from the supported beam root is used.
Dispersion length at U/S of beam Tus=Tc+T+r=37 mm
Dispersion length at seat root Leb=2*Tus+tc+1.172*rc=94.954 mm
Length of seating bracket ls=150 mm
Dispersion length less than seat length.
As V ≤ Pcr (156 kN ≤ 261.12 kN), shear force within bearing capacity at root of seat.

Hence the design of the seating bracket connection is OK.

SEATING BRACKET	**150 mm x 90 mm x 10 mm Angle**	
SUMMARY	**Grade S 275 x 150 mm long**	
LEG CONNECTED	**Fillet weld size**	**6 mm**
TO SUPPORTING	**Length of weld**	**288 mm**
MEMBER		
SUPPORTED BEAM	**457 x 152 x 67 UB**	
END DETAILS	**End clearance**	**6 mm**
	Bearing length 'b1'	**23 mm**
	Applied flange force	**156 kN**
	Local web capacity	**182 kN**
	Web buckling capacity	**123 kN**
	Bearing stiffeners are required.	

Location: Ex1 - From 'Manual on Connections'

Seating bracket

The analysis of the connection assumes that a standard angle section is used for the seating bracket.

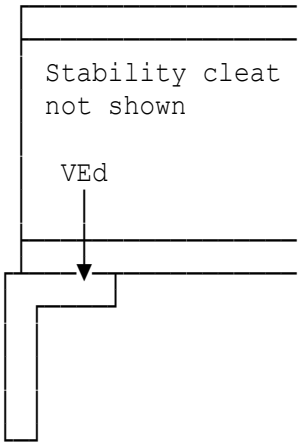

Calculations are in accordance with EC3 Parts 1-5 and 1-8.

The stability cleat will provide torsional resistance against lateral buckling of the beam and will resist tie and erection forces. The seating cleat will resist the vertical load.

Design vertical load on bracket VEd=254 kN
150 x 90 x 10 mm Unequal Angle (Advance UKA)

Bolt group connecting the angle seat to supporting member

Diameter of bolts db=20 mm

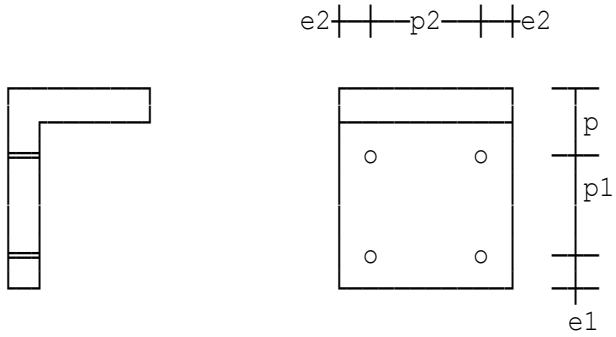

Four bolt connection.

Distance to first row of bolts p=55 mm
Pitch of bolts vertically p1=55 mm

Supporting column details

254 x 254 x 73 UKC

Supported beam details

533 x 210 x 92 UKB
Length of seating bracket ls=120 mm
Stiff bearing length ss=23 mm
Stiff bearing position C=0 mm
Design resistance of the web is less than the design transverse force applied to the web (254 kN). Bearing stiffeners are required.

SEATING BRACKET	**150 mm x 90 mm x 10 mm Angle**	
SUMMARY	**Grade S 275 x 120 mm long**	
LEG CONNECTED	**Number of bolts**	**4**
TO SUPPORTING	**Diameter of bolts**	**M 20 Grade 8.8**
MEMBER	**Pitch vertically**	**55 mm**
	End distance p	**55 mm**
SUPPORTED BEAM	**533 x 210 x 92 UKB**	
END DETAILS	**End clearance**	**6 mm**
	Bearing length 'ss'	**23 mm**
	Applied flange force	**254 kN**
	Web resistance	**217 kN**
	Bearing stiffeners are required.	
SUPPORTING COLUMN	**254 x 254 x 73 UKC**	

Location: Ex2 - Welded connection

Seating bracket

The analysis of the connection assumes that a standard angle section is used for the seating bracket.

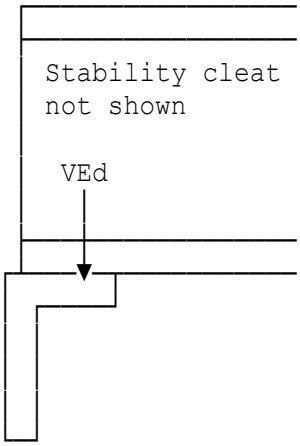

Calculations are in accordance with EC3 Parts 1-5 and 1-8.

The stability cleat will provide torsional resistance against lateral buckling of the beam and will resist tie and erection forces. The seating cleat will resist the vertical load.

Design vertical load on bracket VEd=156 kN
150 x 90 x 10 mm Unequal Angle (Advance UKA)

Weld connecting seat to supporting member

Shelf angle thickness	t=10 mm
Fillet weld leg length	s=6 mm
Force in the weld	FwEd=VEd/lw=0.54167 kN/mm
Design strength of weld per mm	FwRd=0.7*s*fvwd/1000=0.9324 kN/mm

As FwEd ≤ FwRd (0.54167 kN/mm ≤ 0.9324 kN/mm), shear on bracket is within allowable and the 6 mm fillet weld is OK.

Supported beam details

457 x 152 x 67 UKB

Length of seating bracket	ls=150 mm
Stiff bearing length	ss=23 mm
Stiff bearing position	C=0 mm

SEATING BRACKET	**150 mm x 90 mm x 10 mm Angle**	
SUMMARY	**Grade S 275 x 150 mm long**	
LEG CONNECTED	**Fillet weld size**	**6 mm**
TO SUPPORTING	**Length of weld**	**288 mm**
MEMBER		
SUPPORTED BEAM	**457 x 152 x 67 UKB**	
END DETAILS	**End clearance**	**6 mm**
	Bearing length 'ss'	**23 mm**
	Applied flange force	**156 kN**
	Web resistance	**179 kN**

Location: Ex1 - Welded connection and equal angle

Shelf angle supporting slab

The analysis of the connection assumes that a standard angle section is used for the shelf angle. Distance ecc is from the face of the supporting beam to the point of application of the design vertical load V. The shelf angle vertical leg could be facing up or down. Calculations are in accordance with BS5950-1.

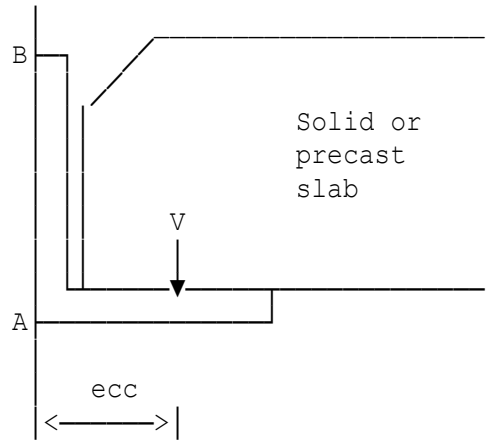

The shelf angle vertical leg is welded at points A and B to the web of the supporting beam. The latter is a UB or UC section. Hit and miss FW will be adopted.

Ultimate load on shelf angle	V=60 kN/m
Grade of shelf angle	S 275
Grade of supporting member	S 275
Yield strength of steel	fy=275 N/mm²

Shelf angle details

90 x 90 x 10 mm Equal Angle.

Supporting beam details

457 x 152 x 67 UB.

Weld connecting shelf angle to supporting beam

Supporting beam web thickness	tsb=9 mm
Shelf angle thickness	T=10 mm
Fillet weld leg length	s=6 mm

Normally a hit and miss fillet weld length of hmFWl=100 mm along the length of the shelf angle at top and bottom is specified (i.e. 100mm weld and then 100mm miss along the length of the shelf angle).
The distance below is from the face of the supporting beam to the point of application of the design vertical load V.

Distance to vertical load	ecc=75 mm
Bottom weld shear force governs	Fw=0.12 kN/mm
Design strength of weld per mm	Pw=0.7*s*pw/1000=0.924 kN/mm

As Fw ≤ Pw (0.12 kN/mm ≤ 0.924 kN/mm), force on shelf angle is within allowable and the 6 mm fillet weld is OK.

Shelf angle bending check

Section modulus	Z=1000*T^2/(6*1000)=16.667 cm³
Design moment	M=V*ecc/1000=4.5 kNm/m

Moment capacity Mc=Z*fy/1000=4.5833 kNm/m
As M ≤ Mc (4.5 kNm/m ≤ 4.5833 kNm/m), design moment is OK.

Deflection check

Maximum allowable deflection delta=1.5 mm
Defln at angle toe (support) 1.0396 mm
Defln at angle toe (midspan) 1.0471 mm
Maximum allowable deflection 1.5 mm
Deflection is OK.
The analysis is valid as the longitudinal bending deflection is small relative to the angle deflection (i.e. p=0.6153 ≤ 5 percent).

DESIGN SUMMARY

Shelf angle	**90 mm x 90 mm x 10 mm Angle**
Grade of steel	**S 275**
Fillet weld size	**6 mm**
Hit and miss FW length	**100 mm hit, 100 mm miss**
Supporting beam	**457 x 152 x 67 UB**
Applied flange force	**60 kN/m**
Defln at angle toe (support)	**1.04 mm**
Defln at angle toe (midspan)	**1.05 mm**
Maximum allowable deflection	**1.5 mm**

Location: Ex2 - Welded connection and unequal angle

Shelf angle supporting slab

The analysis of the connection assumes that a standard angle section is used for the shelf angle. Distance ecc is from the face of the supporting beam to the point of application of the design vertical load V. The shelf angle vertical leg could be facing up or down. Calculations are in accordance with BS5950-1.

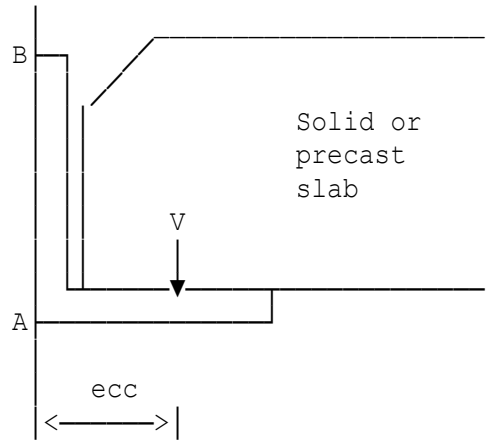

The shelf angle vertical leg is welded at points A and B to the web of the supporting beam. The latter is a UB or UC section. Hit and miss FW will be adopted.

Ultimate load on shelf angle	V=60 kN/m
Grade of shelf angle	S 275
Grade of supporting member	S 275
Yield strength of steel	fy=275 N/mm²

Shelf angle details

150 x 90 x 10 mm Unequal Angle.

Supporting beam details

457 x 152 x 67 UB.

Weld connecting shelf angle to supporting beam

Supporting beam web thickness	tsb=9 mm
Shelf angle thickness	T=10 mm
Fillet weld leg length	s=6 mm

Normally a hit and miss fillet weld length of hmFWl=100 mm along the length of the shelf angle at top and bottom is specified (i.e. 100mm weld and then 100mm miss along the length of the shelf angle).
The distance below is from the face of the supporting beam to the point of application of the design vertical load V.

Distance to vertical load	ecc=75 mm
Bottom weld shear force governs	Fw=0.12 kN/mm
Design strength of weld per mm	Pw=0.7*s*pw/1000=0.924 kN/mm

As Fw ≤ Pw (0.12 kN/mm ≤ 0.924 kN/mm), force on shelf angle is within allowable and the 6 mm fillet weld is OK.

Shelf angle bending check

Section modulus	Z=1000*T^2/(6*1000)=16.667 cm³
Design moment	M=V*ecc/1000=4.5 kNm/m

Moment capacity Mc=Z*fy/1000=4.5833 kNm/m
As M ≤ Mc (4.5 kNm/m ≤ 4.5833 kNm/m), design moment is OK.

Deflection check

Maximum allowable deflection delta=1.5 mm
Defln at angle toe (support) 0.98971 mm
Defln at angle toe (midspan) 1.0133 mm
Maximum allowable deflection 1.5 mm
Deflection is OK.
The analysis is valid as the longitudinal bending deflection is small relative to the angle deflection (i.e. p=0.11969 ≤ 5 percent).

DESIGN SUMMARY

Shelf angle	**150 mm x 90 mm x 10 mm Angle**
Grade of steel	**S 275**
Fillet weld size	**6 mm**
Hit and miss FW length	**100 mm hit, 100 mm miss**
Supporting beam	**457 x 152 x 67 UB**
Applied flange force	**60 kN/m**
Defln at angle toe (support)	**0.99 mm**
Defln at angle toe (midspan)	**1.01 mm**
Maximum allowable deflection	**1.5 mm**

Location: Ex1 - Welded shelf angle to supporting beam web

Shelf angle supporting slab

The analysis of the connection assumes that a standard angle section is used for the shelf angle. Distance ecc is from the face of the supporting beam to the point of application of the design vertical load VEd. The shelf angle vertical leg could be facing up or down. Calculations are in accordance with EC3 Part 1-1 & EC3 Part 1-8.

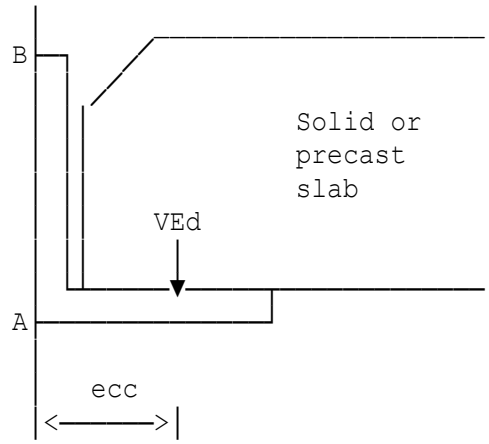

The shelf angle vertical leg is welded at points A and B to the web of the supporting beam. The latter is a UB or UC section. Hit and miss FW will be adopted.

Design load on shelf angle	VEd=60 kN/m
Grade of angle seat	S 275
Grade of supporting member	S 275
Yield strength of steel	fy=275 N/mm²

Shelf angle details

90 x 90 x 10 mm Equal Angle (Advance UKA)

Supporting beam details

457 x 152 x 67 UKB

Weld connecting shelf angle to supporting member

Supporting beam web thickness	twsb=9 mm
Shelf angle thickness	t=10 mm
Fillet weld leg length	s=6 mm

The distance below is from the face of the supporting beam to the point of application of the design vertical load VEd.

Distance to vertical load	ecc=75 mm
Bottom weld shear force governs	FwEd=0.12 kN/mm
Design strength of weld per mm	FwRd=0.7*s*fvwd/1000=0.9324 kN/mm

As FwEd ≤ FwRd (0.12 kN/mm ≤ 0.9324 kN/mm), force on shelf angle is within allowable and the 6 mm fillet weld is OK.

Shelf angle bending check

Section modulus	Wel=1000*t^2/(6*1000)=16.667 cm³
Design moment	MEd=VEd*ecc/1000=4.5 kNm/m
Partial factor for resistance	gamM0=1.0
Moment resistance per m	McRd=Wel*fy/(gamM0*1000)=4.5833 kNm/m

As MEd ≤ McRd (4.5 kNm/m ≤ 4.5833 kNm/m), design moment is OK.

Deflection check

Maximum allowable deflection	delta=1.5 mm
Defln at angle toe (support)	1.0396 mm
Defln at angle toe (midspan)	1.0471 mm
Maximum allowable deflection	1.5 mm

Deflection is OK.
The analysis is valid as the longitudinal bending deflection is small relative to the angle deflection (i.e. p=0.6153 ≤ 5 percent).

DESIGN SUMMARY

Shelf angle size	**90 mm x 90 mm x 10 mm Angle**
Grade of steel	**S 275**
Fillet weld size	**6 mm**
Hit and miss FW length	**100 mm hit, 100 mm miss**
Supporting beam	**457 x 152 x 67 UKB**
Design load on shelf angle	**60 kN/m**
Defln at angle toe (support)	**1.04 mm**
Defln at angle toe (midspan)	**1.05 mm**
Maximum allowable deflection	**1.5 mm**

Location: Modified Example 16, 'Steelwork Design Guide'.

Partial depth end plate

Analysis of the connection follows the treatment in the BCSA publication 'Manual on Connections Volume 1 - Joints in simple construction' amended to comply with BS5950-1:2000.
Universal section to universal section connection using standard bolts.
Factored end reaction Q=490 kN

Supporting member details

610 x 229 x 140 UKB
Thickness of connecting ply ts=13.1 mm

Supported beam details

533 x 210 x 92 UKB

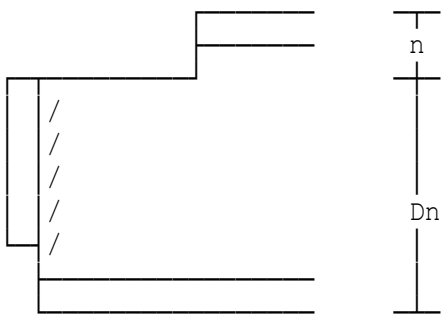

Length of notch to end face	N=120 mm
Depth of notch	n=36 mm
Reduced depth of sectn.at notch	Dn=D-n=497.1 mm
Thickness of end plate	tp=10 mm
Diameter of bolts	db=20 mm
Number of bolts in end plate	bn=8
Pitch of bolts vertically	p=100 mm
Edge distance	e1=30 mm
End distance	e2=50 mm
Cross-centres of bolts	crs=90 mm
Weld leg length	s=6 mm
Applied shear force	Qa=1020 kN

END PLATE SUMMARY

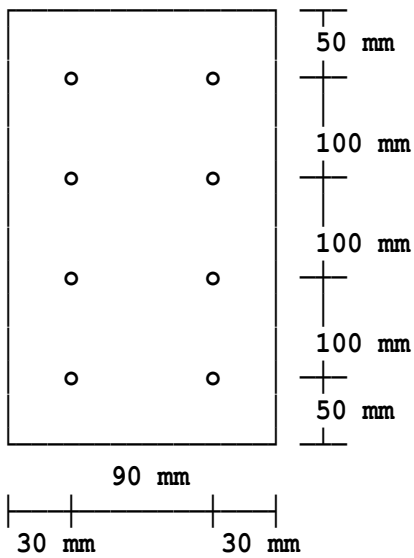

SUMMARY OF END PLATE REQUIREMENTS	**400 mm x 150 mm x 10 mm plate**
	Grade S 275
	Number of bolts 8
	Diameter of bolts M 20 Grade 8.8
	Fillet weld size 6 mm
	Electrode strength Es 35

Location: Modified Example 1 - joints publication

Partial depth end plate

Analysis of the connection follows the treatment in the BCSA publication 'Manual on Connections Volume 1 - Joints in simple construction' amended to comply with BS5950-1:2000.
Universal section to universal section connection using standard bolts.
Factored end reaction Q=300 kN

Supporting member details

610 x 229 x 140 UKB
Thickness of connecting ply ts=13.1 mm

Supported beam details

406 x 178 x 74 UKB

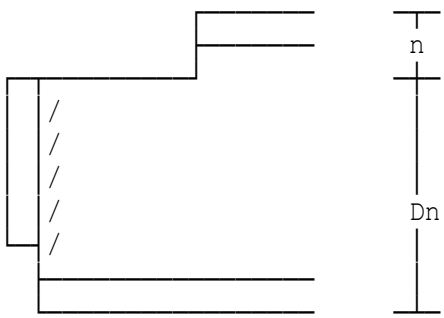

Length of notch to end face	N=120 mm
Depth of notch	n=50 mm
Reduced depth of sectn.at notch	Dn=D-n=362.8 mm
Thickness of end plate	tp=10 mm
Diameter of bolts	db=20 mm
Number of bolts in end plate	bn=8
Pitch of bolts vertically	p=70 mm
Edge distance	e1=30 mm
End distance	e2=40 mm
Cross-centres of bolts	crs=140 mm
Weld leg length	s=6 mm
Length between restraints	Lb=4500 mm

END PLATE SUMMARY

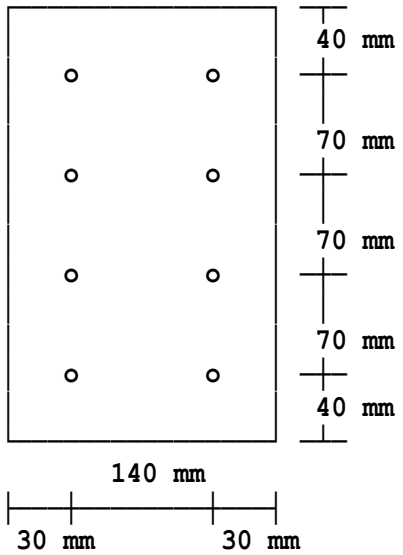

SUMMARY OF	**290 mm x 200 mm x 10 mm plate**
END PLATE	**Grade S 275**
REQUIREMENTS	**Number of bolts 8**
	Diameter of bolts M 20 Grade 8.8
	Fillet weld size 6 mm
	Electrode strength Es 35

Location: Example 2 - Joints publication

Partial depth end plate

Analysis of the connection follows the treatment in the BCSA publication 'Manual on Connections Volume 1 - Joints in simple construction' amended to comply with BS5950-1:2000.
Universal section to universal section connection using standard bolts.
Structural integrity tie force Tf=175 kN

Supporting member details

305 x 305 x 137 UKC
Thickness of connecting ply ts=13.8 mm

Supported beam details

406 x 178 x 74 UKB

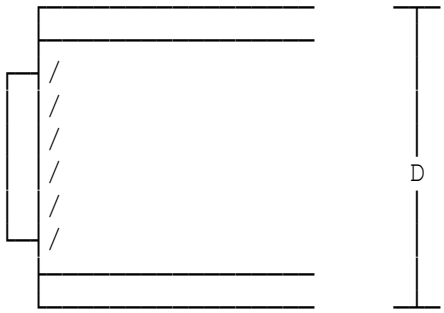

Thickness of end plate	tp=8 mm
Diameter of bolts	db=20 mm
Number of bolts in end plate	bn=8
Pitch of bolts vertically	p=70 mm
Edge distance	e1=35 mm
End distance	e2=40 mm
Cross-centres of bolts	crs=90 mm
Weld leg length	s=6 mm

END PLATE SUMMARY

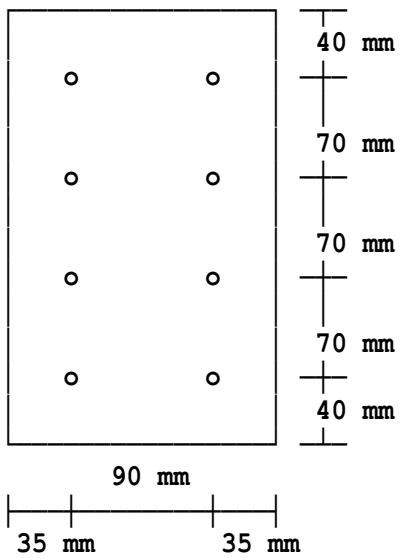

SUMMARY OF END PLATE REQUIREMENTS	**290 mm x 160 mm x 8 mm plate**
	Grade S 275
	Number of bolts 8
	Diameter of bolts M 20 Grade 8.8
	Fillet weld size 6 mm
	Electrode strength Es 35

Location: Non-standard sections with tie force and vertical load

Partial depth end plate

Analysis of the connection follows the treatment in the BCSA publication 'Manual on Connections Volume 1 - Joints in simple construction' amended to comply with BS5950-1:2000.
Universal section to universal section connection using standard bolts.
Structural integrity tie force Tf=160 kN

Supporting member details

Thickness of connecting ply ts=16 mm

Supported beam details

Thickness of end plate	tp=8 mm
Diameter of bolts	db=20 mm
Number of bolts in end plate	bn=8
Pitch of bolts vertically	p=70 mm
Edge distance	e1=35 mm
End distance	e2=40 mm
Cross-centres of bolts	crs=90 mm
Weld leg length	s=6 mm

END PLATE SUMMARY

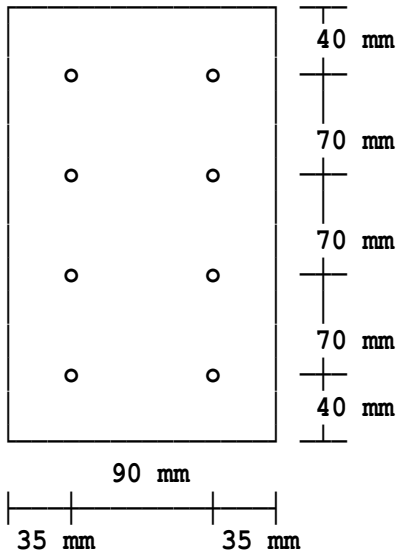

SUMMARY OF END PLATE REQUIREMENTS	**290 mm x 160 mm x 8 mm plate**
	Grade S 275
	Number of bolts 8
	Diameter of bolts M 20 Grade 8.8
	Fillet weld size 6 mm
	Electrode strength Es 35

Copyright 1986-2024 Fitzroy Systems Ltd.

Location: Modified Example 16, 'Steelwork Design Guide' - RHS column

Partial depth end plate

Analysis of the connection follows the treatment in the BCSA publication 'Manual on Connections Volume 1 - Joints in simple construction' amended to comply with BS5950-1:2000.
Universal section beam to RHS column connection using Flowdrill connectors.
Factored end reaction Q=490 kN

Supporting member details

350 x 350 x 12.5 SHS - Hot finished.
Properties (cm): A=167 rx=13.7 Zx=1800 Sx=2110 Ix=31500 J=48900 C=2650

Supported beam details

533 x 210 x 92 UKB

Thickness of end plate	tp=10 mm
Diameter of bolts	db=20 mm
Number of bolts in end plate	bn=8
Pitch of bolts vertically	p=100 mm
Edge distance	e1=50 mm
End distance	e2=50 mm
Cross-centres of bolts	crs=90 mm
Distance top beam to plate	n=50 mm
Weld leg length	s=6 mm

END PLATE SUMMARY

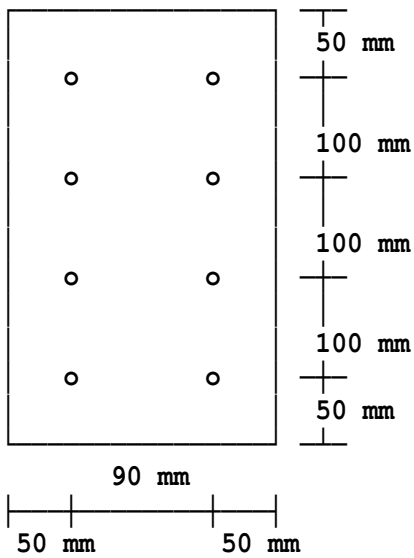

SUMMARY OF END PLATE REQUIREMENTS	**400 mm x 190 mm x 10 mm plate**
	Grade S 275
	Number of bolts 8
	Diameter of bolts M 20 Flowdrill
	Fillet weld size 6 mm
	Electrode strength Es 35

Location: Structural integrity - Flowdrill bolts

Partial depth end plate

Analysis of the connection follows the treatment in the BCSA publication 'Manual on Connections Volume 1 - Joints in simple construction' amended to comply with BS5950-1:2000.
Universal section beam to RHS column connection using Flowdrill connectors.
Structural integrity tie force Tf=75 kN

Supporting member details

250 x 250 x 10 SHS - Hot finished.
Properties (cm): A=94.9 rx=9.77 Zx=724 Sx=851 Ix=9060 J=14100 C=1070

Supported beam details

406 x 178 x 74 UKB

Thickness of end plate	tp=8 mm
Diameter of bolts	db=20 mm
Number of bolts in end plate	bn=10
Pitch of bolts vertically	p=70 mm
Edge distance	e1=35 mm
End distance	e2=40 mm
Cross-centres of bolts	crs=90 mm
Weld leg length	s=6 mm

Since Tf ≤ Trhs (75 kN ≤ 174.25 kN) tie force within the tying capacity of the RHS column wall.

END PLATE SUMMARY

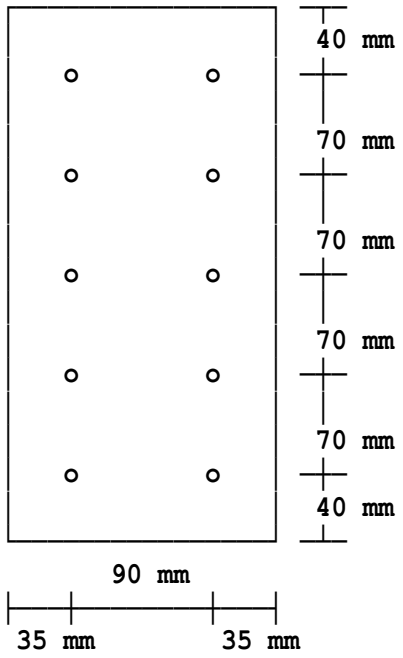

SUMMARY OF END PLATE REQUIREMENTS	**360 mm x 160 mm x 8 mm plate**
	Grade S 275
	Number of bolts 10
	Diameter of bolts M 20 Flowdrill
	Fillet weld size 6 mm
	Electrode strength Es 35

Location: Similar to Flowdrill example using Hollo-Bolts

Partial depth end plate

Analysis of the connection follows the treatment in the BCSA publication 'Manual on Connections Volume 1 - Joints in simple construction' amended to comply with BS5950-1:2000.
Universal section beam to RHS column connection using Hollo-Bolt connectors.
Structural integrity tie force Tf=75 kN

Supporting member details

250 x 250 x 10 SHS - Hot finished.
Properties (cm): A=94.9 rx=9.77 Zx=724 Sx=851 Ix=9060 J=14100 C=1070

Supported beam details

406 x 178 x 74 UKB

Thickness of end plate	tp=8 mm
Diameter of bolts	db=16 mm
Number of bolts in end plate	bn=10
Pitch of bolts vertically	p=70 mm
Edge distance	e1=35 mm
End distance	e2=40 mm
Cross-centres of bolts	crs=90 mm
Weld leg length	s=6 mm

Since Tf ≤ Trhs (75 kN ≤ 164.24 kN) tie force within the tying capacity of the RHS column wall.

END PLATE SUMMARY

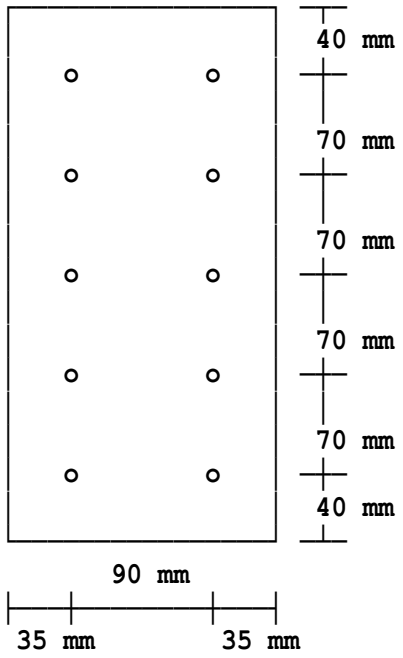

SUMMARY OF END PLATE REQUIREMENTS	**360 mm x 160 mm x 8 mm plate**
	Grade S 275
	Number of bolts 10
	Diameter of bolts M 16 Hollo-Bolt
	Fillet weld size 6 mm
	Electrode strength Es 35

Location: Simple Joints to Eurocode 3, Example 1

Partial depth end plate

Analysis of the connection follows the treatment in the BCSA/SCI publication 'Joints in Steel Construction: Simple Joints to EC3' and BS EN 1993-1: 2005.
Universal section to universal section connection using standard bolts.
Factored end reaction VEd=550 kN

Supporting member details

610 x 229 x 140 UKB
Thickness of connecting ply ts=13.1 mm

Supported beam details

533 x 210 x 92 UKB

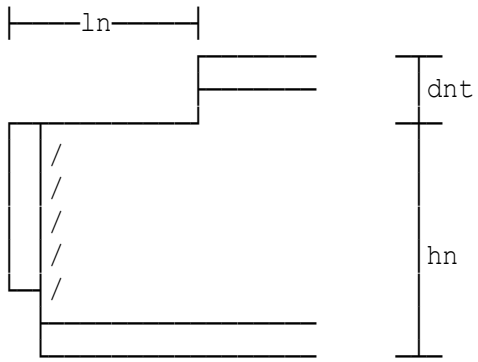

Length of notch to end face	ln=122 mm
Depth of notch	dnt=50 mm
Reduced depth of sectn.at notch	hn=h-dnt=483.1 mm
Thickness of end plate	tp=12 mm
Diameter of bolts	db=20 mm
Number of bolts in end plate	bn=12
Pitch of bolts vertically	p1=70 mm
Vertical end distance	e1=40 mm
Horizontal edge distance	e2=30 mm
Cross-centres of bolts	p3=140 mm
Weld size (leg length)	s=6 mm

END PLATE SUMMARY

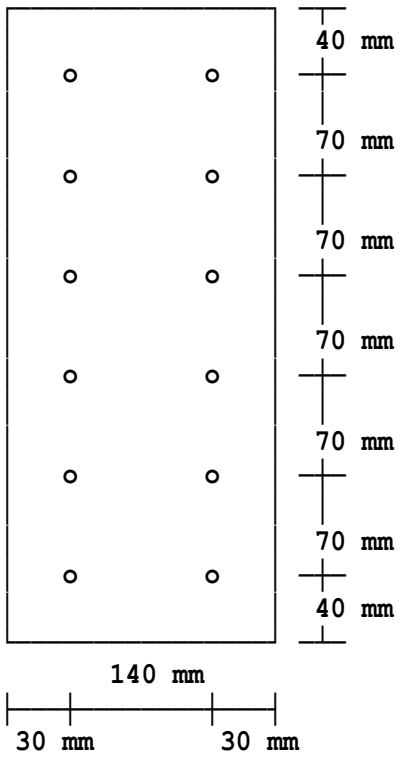

SUMMARY OF END PLATE REQUIREMENTS	**430 mm x 200 mm x 12 mm plate**
	Grade S 275
	Number of bolts 12
	Diameter of bolts M 20 Grade 8.8
	Fillet weld size 6 mm

Location: Simple Joints to Eurocode 3, Example 2

Partial depth end plate

Analysis of the connection follows the treatment in the BCSA/SCI publication 'Joints in Steel Construction: Simple Joints to EC3' and BS EN 1993-1: 2005.
Universal section to universal section connection using standard bolts.
Structural integrity tie force FEd=175 kN

Supporting member details

305 x 305 x 137 UKC
Thickness of connecting ply ts=13.8 mm

Supported beam details

406 x 178 x 74 UKB

Thickness of end plate	tp=10 mm
Diameter of bolts	db=20 mm
Number of bolts in end plate	bn=8
Pitch of bolts vertically	p1=70 mm
Vertical end distance	e1=40 mm
Horizontal edge distance	e2=35 mm
Cross-centres of bolts	p3=90 mm
Weld size (leg length)	s=6 mm
Diameter of bolt washer	dw=33 mm

END PLATE SUMMARY

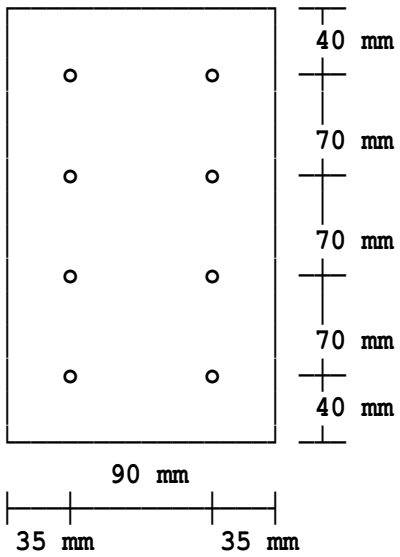

SUMMARY OF END PLATE REQUIREMENTS	**290 mm x 160 mm x 10 mm plate**
	Grade S 275
	Number of bolts 8
	Diameter of bolts M 20 Grade 8.8
	Fillet weld size 6 mm

Location: Simple Joints to Eurocode 3, Example 3

Partial depth end plate

Analysis of the connection follows the treatment in the BCSA/SCI publication 'Joints in Steel Construction: Simple Joints to EC3' and BS EN 1993-1: 2005.
Universal section beam to RHS column connection using Flowdrill connectors.
Factored end reaction VEd=550 kN

Supporting member details

250 x 250 x 12.5 SHS - Hot finished.
Properties (cm): A=117 iy=9.66 Wely=873 Wply=1040 Iy=10900 It=17200 Wt=1280

Supported beam details

533 x 210 x 92 UKB

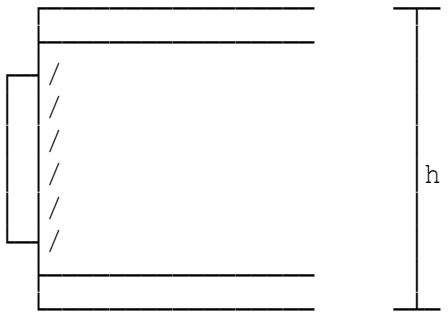

Thickness of end plate	tp=12 mm
Diameter of bolts	db=20 mm
Number of bolts in end plate	bn=12
Pitch of bolts vertically	p1=70 mm
Vertical end distance	e1=40 mm
Horizontal edge distance	e2=30 mm
Cross-centres of bolts	p3=140 mm
Weld size (leg length)	s=6 mm

END PLATE SUMMARY

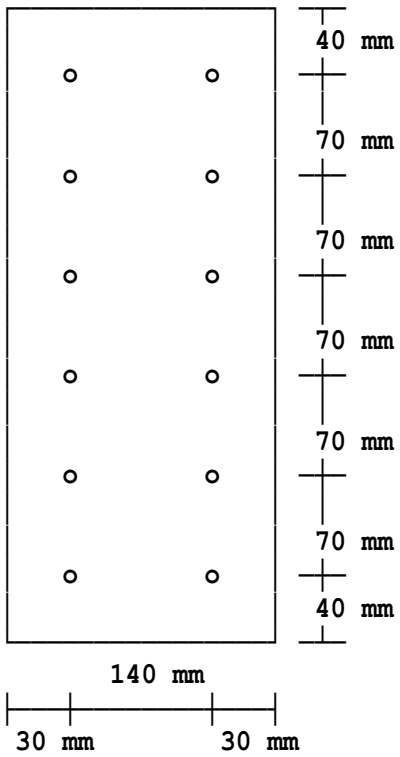

SUMMARY OF END PLATE REQUIREMENTS	**430 mm x 200 mm x 12 mm plate**	
	Grade S 275	
	Number of bolts	**12**
	Diameter of bolts	**M 20 Flowdrill**
	Fillet weld size	**6 mm**

Location: Simple Joints to Eurocode 3, Example 3 - tying resistance

Partial depth end plate

Analysis of the connection follows the treatment in the BCSA/SCI publication 'Joints in Steel Construction: Simple Joints to EC3' and BS EN 1993-1: 2005.
Universal section beam to RHS column connection using Flowdrill connectors.
Structural integrity tie force FEd=275 kN

Supporting member details

250 x 250 x 12.5 SHS - Hot finished.
Properties (cm): A=117 iy=9.66 Wely=873 Wply=1040 Iy=10900 It=17200 Wt=1280

Supported beam details

533 x 210 x 92 UKB

Thickness of end plate	tp=12 mm
Diameter of bolts	db=20 mm
Number of bolts in end plate	bn=12
Pitch of bolts vertically	p1=70 mm
Vertical end distance	e1=40 mm
Horizontal edge distance	e2=35 mm
Cross-centres of bolts	p3=140 mm
Weld size (leg length)	s=6 mm
Diameter of bolt washer	dw=33 mm

END PLATE SUMMARY

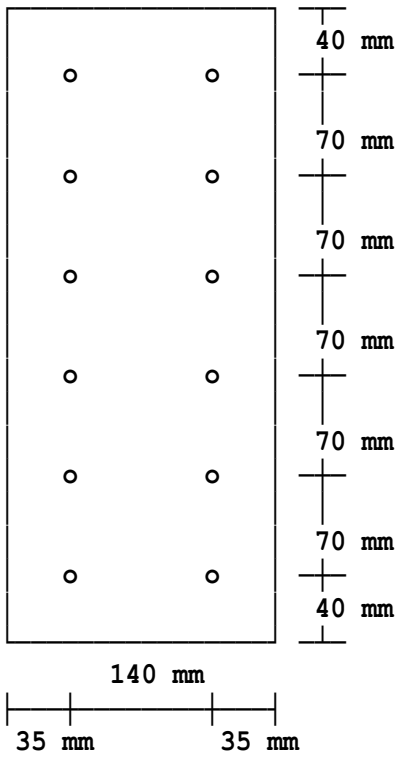

SUMMARY OF END PLATE REQUIREMENTS	**430 mm x 210 mm x 12 mm plate**
	Grade S 275
	Number of bolts 12
	Diameter of bolts M 20 Flowdrill
	Fillet weld size 6 mm

Copyright 1986-2024 Fitzroy Systems Ltd.

Location: Simple Joints to Eurocode 3, Example 4 - tying resistance

Partial depth end plate

Analysis of the connection follows the treatment in the BCSA/SCI publication 'Joints in Steel Construction: Simple Joints to EC3' and BS EN 1993-1: 2005.
Universal section beam to RHS column connection using Hollo-Bolt connectors.
Structural integrity tie force FEd=275 kN

Supporting member details

250 x 250 x 12.5 SHS - Hot finished.
Properties (cm): A=117 iy=9.66 Wely=873 Wply=1040 Iy=10900 It=17200 Wt=1280

Supported beam details

533 x 210 x 92 UKB

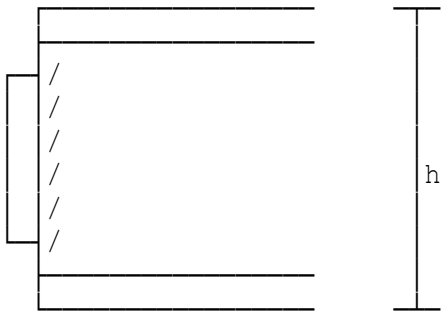

Thickness of end plate	tp=12 mm
Diameter of bolts	db=20 mm
Number of bolts in end plate	bn=10
Pitch of bolts vertically	p1=80 mm
Vertical end distance	e1=45 mm
Horizontal edge distance	e2=45 mm
Cross-centres of bolts	p3=110 mm
Weld size (leg length)	s=6 mm
Diameter of bolt washer	dw=46 mm

END PLATE SUMMARY

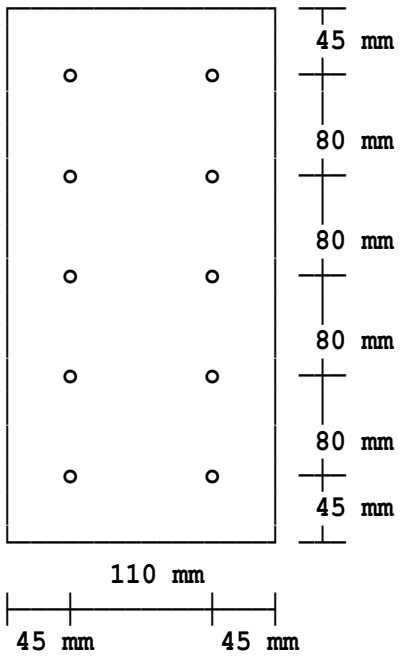

SUMMARY OF END PLATE REQUIREMENTS	**410 mm x 200 mm x 12 mm plate**
	Grade S 275
	Number of bolts 10
	Diameter of bolts M 20 Hollo-Bolt
	Fillet weld size 6 mm

Location: Simple Joints to Eurocode 3, Example 4

Partial depth end plate

Analysis of the connection follows the treatment in the BCSA/SCI publication 'Joints in Steel Construction: Simple Joints to EC3' and BS EN 1993-1: 2005.
Universal section beam to RHS column connection using Hollo-Bolt connectors.
Factored end reaction VEd=550 kN

Supporting member details

250 x 250 x 12.5 SHS - Hot finished.
Properties (cm): A=117 iy=9.66 Wely=873 Wply=1040 Iy=10900 It=17200 Wt=1280

Supported beam details

533 x 210 x 92 UKB

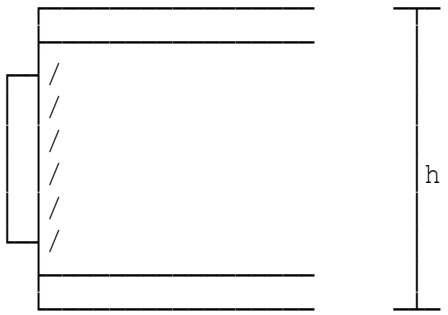

Thickness of end plate	tp=12 mm
Diameter of bolts	db=20 mm
Number of bolts in end plate	bn=10
Pitch of bolts vertically	p1=80 mm
Vertical end distance	e1=45 mm
Horizontal edge distance	e2=45 mm
Cross-centres of bolts	p3=110 mm
Weld size (leg length)	s=6 mm

END PLATE SUMMARY

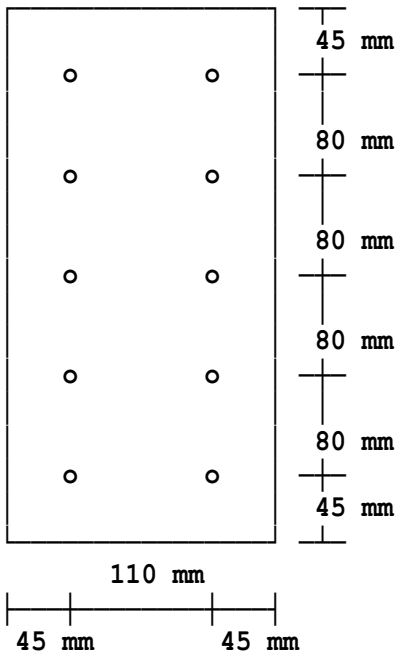

SUMMARY OF END PLATE REQUIREMENTS	**410 mm x 200 mm x 12 mm plate**
	Grade S 275
	Number of bolts 10
	Diameter of bolts M 20 Hollo-Bolt
	Fillet weld size 6 mm

Location: Simple Joints to Eurocode 3, Example 1

Full depth end plate

Analysis of the connection follows the treatment in the BCSA/SCI publication P358 entitled 'Joints in Steel Construction: Simple Joints to Eurocode 3' and BS EN 1993-1:2005.
Factored end reaction VEd=400 kN

Supporting member details

305 x 305 x 137 UKC
Dimensions (mm): hc=320.5 bc=309.2 twc=13.8 tfc=21.7 rc=15.2
Supported beam will be connected to the supporting member web.

Supported beam details

406 x 178 x 74 UKB
Dimensions (mm): h=412.8 bf=179.5 tw=9.5 tf=16 r=10.2
Properties (cm): Ar=94.5

End plate details

Thickness of end plate	tp=10 mm
Diameter of bolts	db=20 mm
Number of bolts in end plate	bn=8
Distance from the top of the beam to the first row of bolts	p=90 mm
Pitch of bolts vertically	p1=70 mm
Edge distance	e2=30 mm
Cross-centres of bolts	p3=90 mm
Length of end plate	hp=450 mm
Weld size (leg length)	s=6 mm

END PLATE SUMMARY

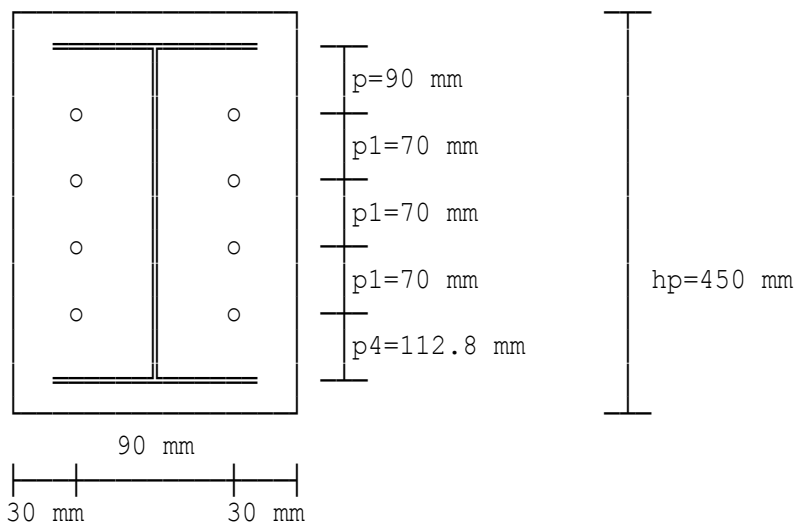

SUMMARY OF	**450 mm x 150 mm x 10 mm plate**
END PLATE	**Grade S 275**
REQUIREMENTS	**Number of bolts 8**
	Diameter of bolts M 20 Grade 8.8
	Fillet weld size 6 mm

Location: Simple Joints to Eurocode 3, Example 2

Full depth end plate

Analysis of the connection follows the treatment in the BCSA/SCI publication P358 entitled 'Joints in Steel Construction: Simple Joints to Eurocode 3' and BS EN 1993-1:2005.
Structural integrity tie force FEd=350 kN

Supporting member details

305 x 305 x 137 UKC
Dimensions (mm): hc=320.5 bc=309.2 twc=13.8 tfc=21.7 rc=15.2
Supported beam will be connected to the supporting member web.

Supported beam details

406 x 178 x 74 UKB
Dimensions (mm): h=412.8 bf=179.5 tw=9.5 tf=16 r=10.2
Properties (cm): Ar=94.5

End plate details

Thickness of end plate	tp=10 mm
Diameter of bolts	db=20 mm
Number of bolts in end plate	bn=8
Distance from the top of the beam to the first row of bolts	p=90 mm
Pitch of bolts vertically	p1=70 mm
Edge distance	e2=30 mm
Cross-centres of bolts	p3=90 mm
Length of end plate	hp=440 mm
Weld size (leg length)	s=6 mm
Diameter of bolt washer	dw=33 mm

END PLATE SUMMARY

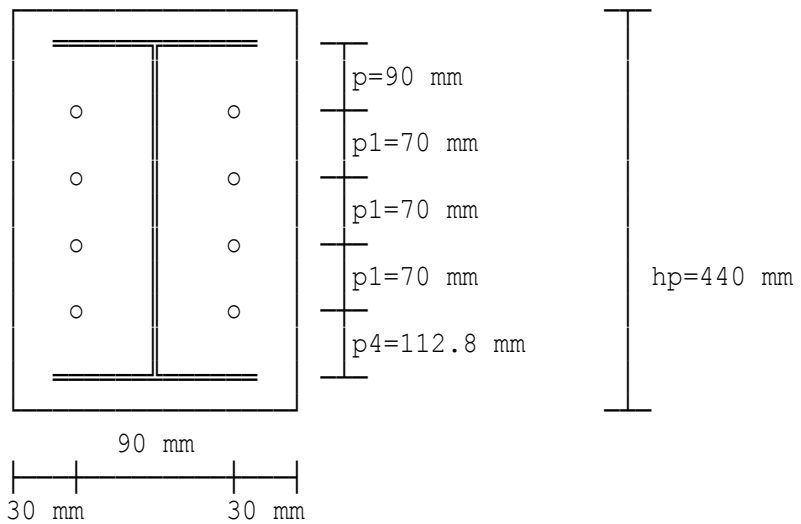

SUMMARY OF END PLATE REQUIREMENTS	**440 mm x 150 mm x 10 mm plate**
	Grade S 275
	Number of bolts 8
	Diameter of bolts M 20 Grade 8.8
	Fillet weld size 6 mm

Location: Ex1 - Joints in Steel construction example 1

Bolted flush end plate eaves connection - beam to column

Calculations are in accordance with BS5950-1:2000 and follow the procedure given in the SCI publication entitled 'Joints in Steel Construction Moment Connections'.
The connection is one sided. The web panel shear cannot be discounted in the determination of the compressive force.

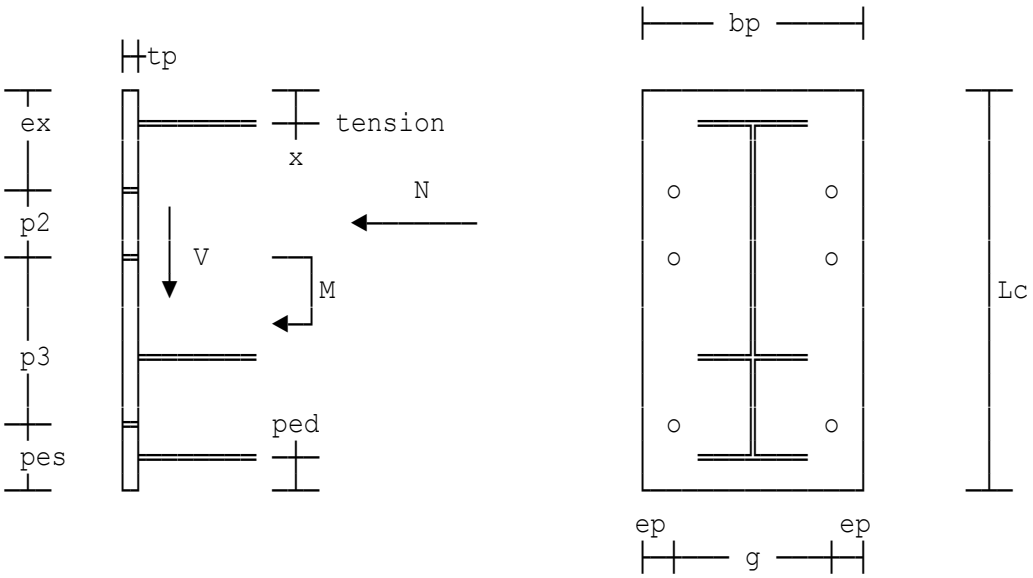

Factored moment	Ma=724 kNm
Factored shear force	Va=304 kN
Axial force (+ve compression)	Na=102 kN

Supporting column details

610 x 229 x 101 UB.

Supported rafter section properties - parent section

457 x 191 x 74 UB.

Section properties - haunch cutting

533 x 210 x 82 UB.

Combined properties & restrictions

Pitch of rafter	Theta=10°
Vertical overall depth	Do=900 mm
Haunch angle to end plate	phi'=78°

Diameter of bolts	bd=24 mm
Thickness of plate	tp=20 mm
Total number of bolts	bn=12
Number of shear bolts	ns=4
Distance to first row of bolts	ex=80 mm
Distance to beam flange	x=20 mm
Pitch of tension bolts	p2=90 mm
Edge distance for shear bolts	pes=130 mm
Over-all length of end plate	Lc=965 mm
Bolt cross-centres	g=90 mm
Width of end plate	bp=200 mm
Assumed web fillet weld size	sww=8 mm
Assumed flange fillet weld size	swf=10 mm

SUMMARY OF BOLT POTENTIAL RESISTANCES

Top row of bolts	Pr1=303.75 kN
Row 2	Pr2=268.7 kN
Row 3	Pr3=209.99 kN
Row 4	Pr4=183.21 kN
Weld size	ss=8 mm
Selected fillet weld size	swt=10 mm
Selected fillet weld size	sfw=8 mm
Factored moment	Mr=237 kNm
Factored shear force	Vr=43 kN
Axial force (+ve compression)	Nr=-56 kN

CONNECTION SUMMARY - all dimensions in diagram are in mm

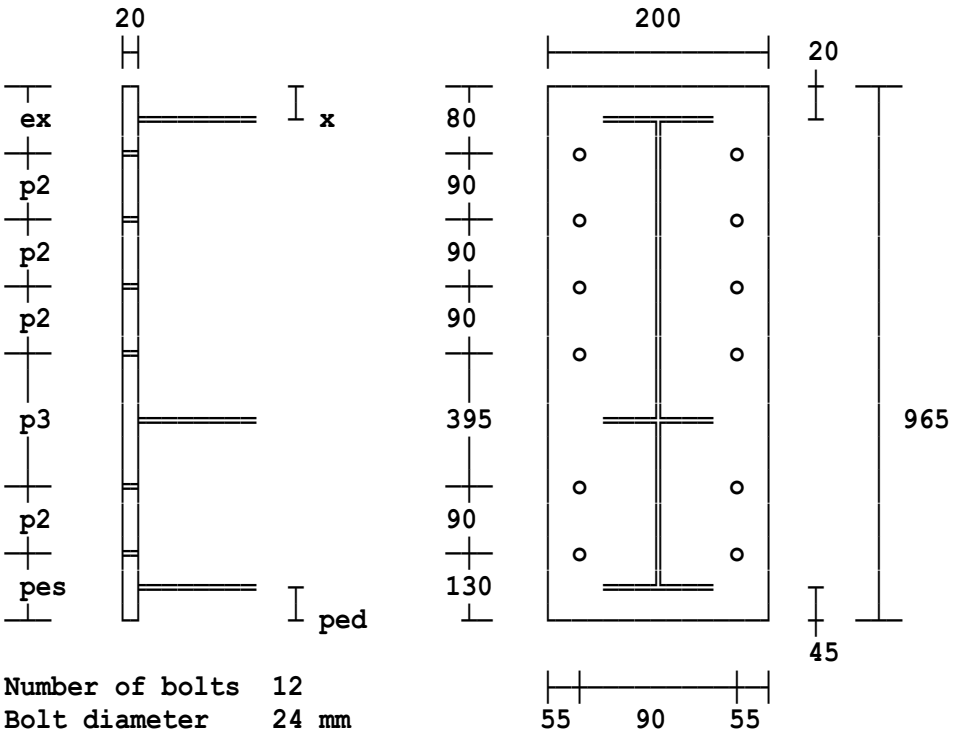

Number of bolts	**12**	
Bolt diameter	**24 mm**	
Bolt grade	**8.8**	
Welds	**Tension flange fillet weld**	**10 mm**
	Web fillet weld	**8 mm**
	Compression flange fillet weld	**8 mm**

Supporting column section	**610 x 229 x 101 UB**
Beam / Rafter section	**457 x 191 x 74 UB**
Haunch section	**533 x 210 x 82 UB**

Column stiffener details

Compression stiffeners	**2/90 mm x 20 mm Grade S 275 connected by 4/8 mm fillet welds.**

Location: Ex2 - As example 1 with tension stiffeners

Bolted flush end plate eaves connection - beam to column

Calculations are in accordance with BS5950-1:2000 and follow the procedure given in the SCI publication entitled 'Joints in Steel Construction Moment Connections'.
The connection is one sided. The web panel shear cannot be discounted in the determination of the compressive force.

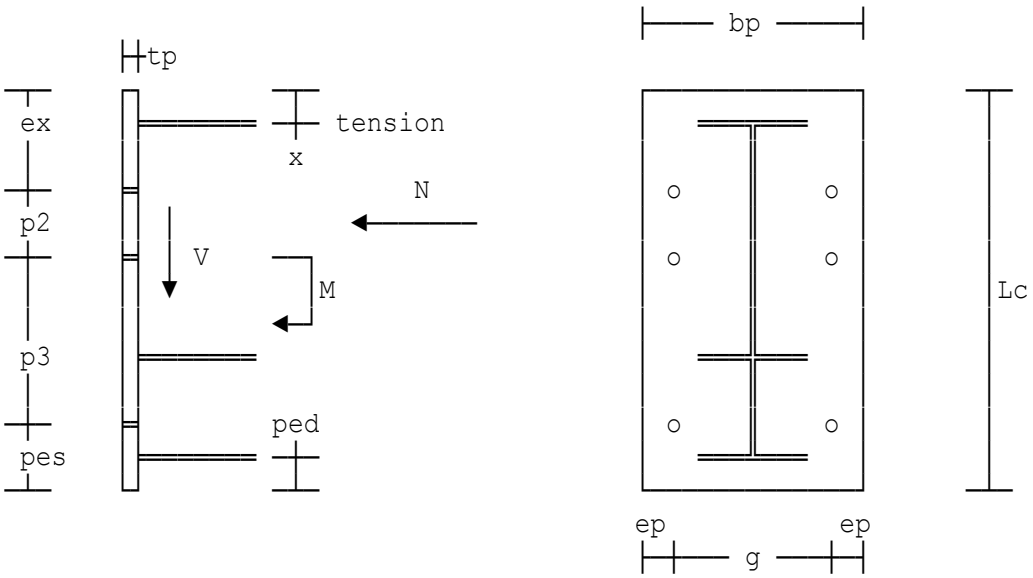

Factored moment	Ma=735 kNm
Factored shear force	Va=304 kN
Axial force (+ve compression)	Na=102 kN

Supporting column details

610 x 229 x 101 UB.

Supported rafter section properties - parent section

457 x 191 x 74 UB.

Section properties - haunch cutting

533 x 210 x 82 UB.

Combined properties & restrictions

Pitch of rafter	Theta=10°
Vertical overall depth	Do=925 mm
Haunch angle to end plate	phi'=78°

Diameter of bolts	bd=24 mm
Thickness of plate	tp=20 mm
Total number of bolts	bn=14
Number of shear bolts	ns=4
Distance to first row of bolts	ex=80 mm
Distance to beam flange	x=20 mm
Pitch of tension bolts	p2=70 mm
Edge distance for shear bolts	pes=90 mm
Over-all length of end plate	Lc=975 mm
Bolt cross-centres	g=90 mm
Width of end plate	bp=200 mm
Assumed web fillet weld size	sww=8 mm
Assumed flange fillet weld size	swf=10 mm

SUMMARY OF BOLT POTENTIAL RESISTANCES

Top row of bolts	Pr1=303.75 kN
Row 2	Pr2=254.76 kN
Row 3	Pr3=142.5 kN
Row 4	Pr4=142.5 kN
Row 5	Pr5=142.5 kN
Weld size	ss=8 mm

Applied moment exceeds moment capacity (665.06 kNm > 655.26 kNm).

Stiffener width	bsgt=90 mm
Proposed rib thickness	tsr=15 mm
Proposed weld size	ssr=11 mm
Selected fillet weld size	swt=12 mm
Selected fillet weld size	sfw=8 mm

CONNECTION SUMMARY - all dimensions in diagram are in mm

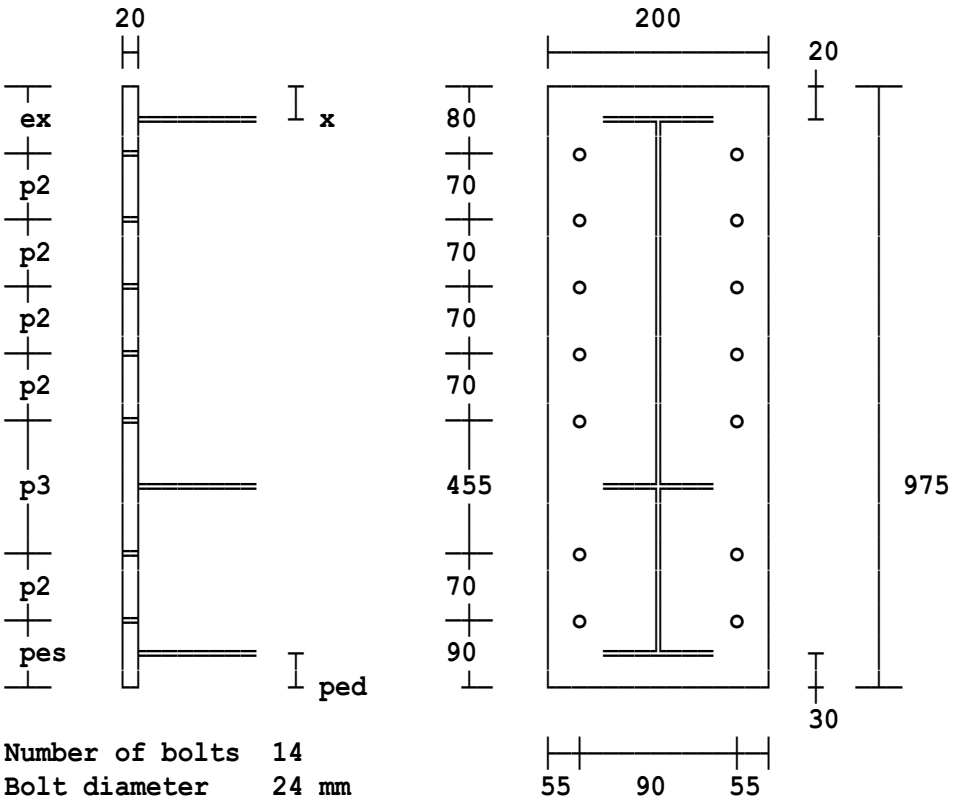

Number of bolts	**14**	
Bolt diameter	**24 mm**	
Bolt grade	**8.8**	
Welds	**Tension flange fillet weld**	**12 mm**
	Web fillet weld	**8 mm**
	Compression flange fillet weld	**10 mm**

Supporting column section	**610 x 229 x 101 UB**
Beam / Rafter section	**457 x 191 x 74 UB**
Haunch section	**533 x 210 x 82 UB**

Column stiffener details

Compression stiffeners	**2/90 mm x 30 mm Grade S 275 connected by 4/8 mm fillet welds.**
Tension stiffeners	**Full depth 15 mm thick. 2/90 mm wide placed midway between the following bolt rows: 1 and 2 2 and 3**

Location: Ex3 - Internal connection, tension rib stiffeners

Bolted flush end plate eaves connection - beam to column

Calculations are in accordance with BS5950-1:2000 and follow the procedure given in the SCI publication entitled 'Joints in Steel Construction Moment Connections'.
Beams are connected to both column flanges. The web panel shear can be discounted in the determination of the compressive force as the connection is assumed to have balanced moments.

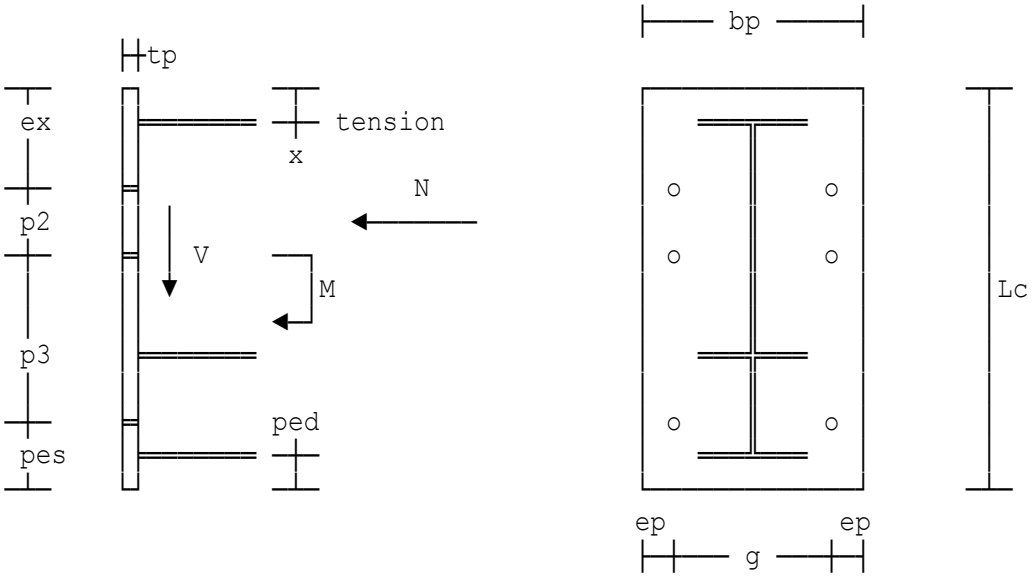

Factored moment	Ma=612 kNm
Factored shear force	Va=214 kN
Axial force (+ve compression)	Na=95 kN

Supporting column details

610 x 229 x 101 UB.

Supported rafter section properties - parent section

406 x 178 x 74 UB.

Section properties - haunch cutting

533 x 210 x 82 UB.

Combined properties & restrictions

Pitch of rafter	Theta=15°
Vertical overall depth	Do=850 mm
Haunch angle to end plate	phi'=67°

Diameter of bolts	bd=24 mm
Thickness of plate	tp=20 mm
Total number of bolts	bn=10
Number of shear bolts	ns=4
Distance to first row of bolts	ex=80 mm
Distance to beam flange	x=20 mm
Pitch of tension bolts	p2=90 mm
Edge distance for shear bolts	pes=130 mm
Over-all length of end plate	Lc=935 mm
Bolt cross-centres	g=90 mm
Width of end plate	bp=200 mm
Assumed web fillet weld size	sww=8 mm
Assumed flange fillet weld size	swf=10 mm

SUMMARY OF BOLT POTENTIAL RESISTANCES

Top row of bolts	Pr1=315.52 kN
Row 2	Pr2=280.47 kN
Row 3	Pr3=186.45 kN
Weld size	ss=8 mm

Applied moment exceeds moment capacity (552.31 kNm > 529.69 kNm).

Stiffener width	bsgt=90 mm
Proposed rib thickness	tsr=15 mm
Proposed weld size	ssr=11 mm

Slip factor for preloaded bolts	mu=0.5
Coefficient for type of hole	Ks=1
Selected fillet weld size	swt=12 mm
Selected fillet weld size	sfw=8 mm

CONNECTION SUMMARY - all dimensions in diagram are in mm

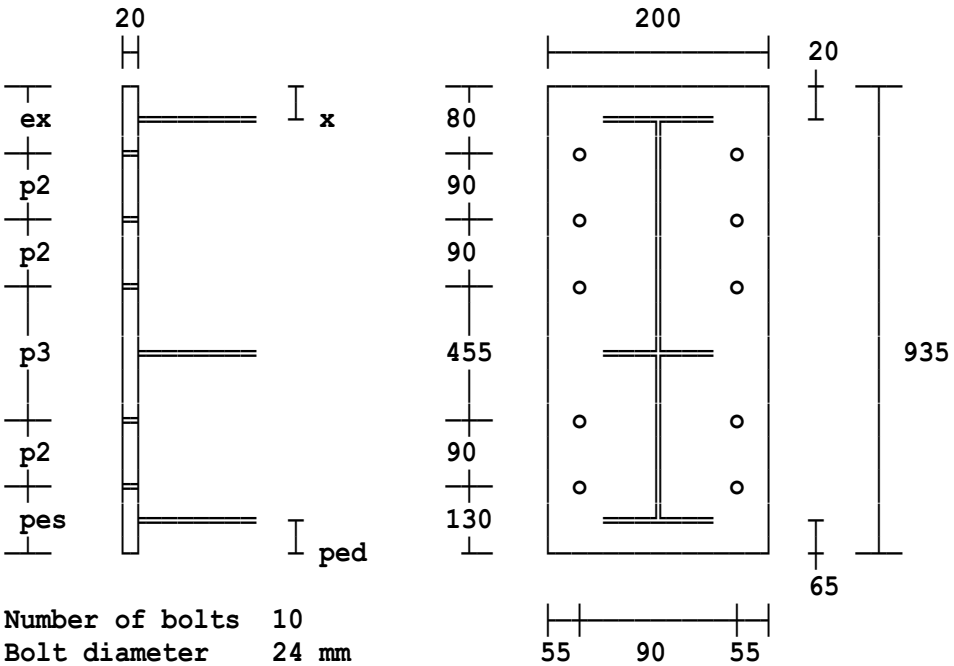

Number of bolts	10
Bolt diameter	24 mm
Bolt grade	HSFG

General grade (8.8) to BS4395 Part 1. Nuts grade 10.

Welds	Tension flange fillet weld	12 mm
	Web fillet weld	8 mm
	Compression flange fillet weld	10 mm

Supporting column section	610 x 229 x 101 UB
Beam / Rafter section	406 x 178 x 74 UB
Haunch section	533 x 210 x 82 UB

Column stiffener details

Compression stiffeners	2/90 mm x 20 mm Grade S 275 connected by 4/8 mm fillet welds.
Tension stiffeners	Full depth 15 mm thick. 2/90 mm wide placed midway between the following bolt rows: 1 and 2 2 and 3

Location: Ex4 - Minimum number of bolts connection

Bolted flush end plate eaves connection - beam to column

Calculations are in accordance with BS5950-1:2000 and follow the procedure given in the SCI publication entitled 'Joints in Steel Construction Moment Connections'.
Beams are connected to both column flanges. The web panel shear can be discounted in the determination of the compressive force as the connection is assumed to have balanced moments.

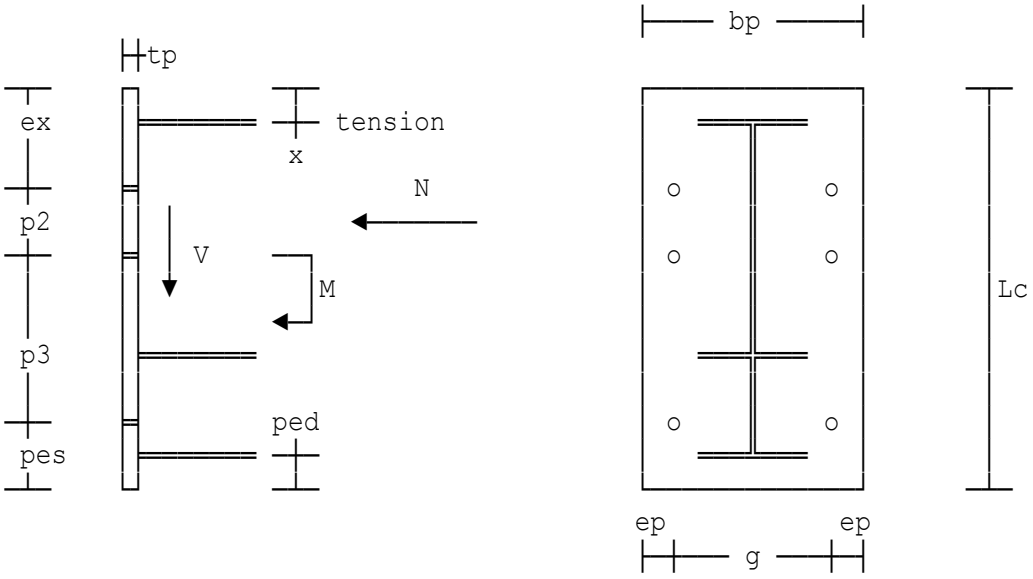

Factored moment	Ma=165 kNm
Factored shear force	Va=94 kN
Axial force (+ve compression)	Na=56 kN

Supporting column details

457 x 191 x 98 UB.

Supported rafter section properties - parent section

305 x 165 x 46 UB.

Section properties - haunch cutting

356 x 171 x 51 UB.

Combined properties & restrictions

Pitch of rafter	Theta=15°
Vertical overall depth	Do=550 mm
Haunch angle to end plate	phi'=63°

Diameter of bolts	bd=20 mm
Thickness of plate	tp=16 mm
Total number of bolts	bn=6
Number of shear bolts	ns=2
Distance to first row of bolts	ex=80 mm
Distance to beam flange	x=20 mm
Pitch of tension bolts	p2=90 mm
Distance tension to shear bolts	p3=315 mm
Edge distance for shear bolts	pes=130 mm
Bolt cross-centres	g=90 mm
Width of end plate	bp=180 mm
Assumed web fillet weld size	sww=8 mm
Assumed flange fillet weld size	swf=8 mm

SUMMARY OF BOLT POTENTIAL RESISTANCES

Top row of bolts	Pr1=243.59 kN
Row 2	Pr2=192.39 kN
Selected fillet weld size	swt=9 mm
Selected fillet weld size	sfw=8 mm
Factored moment	Mr=98 kNm
Factored shear force	Vr=33 kN
Axial force (+ve compression)	Nr=-23 kN

CONNECTION SUMMARY - all dimensions in diagram are in mm

Bolt diameter increased for practical purposes to 24 mm.

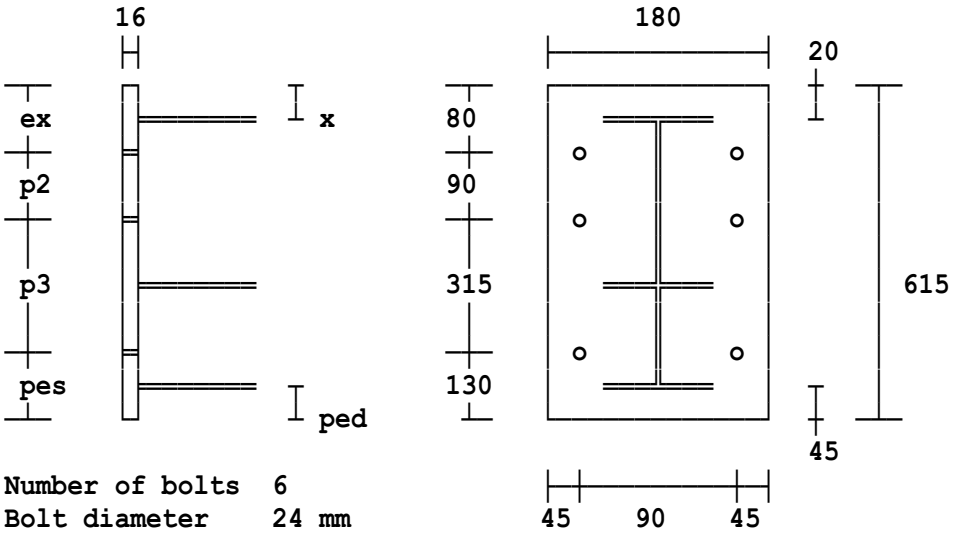

Number of bolts	**6**	
Bolt diameter	**24 mm**	
Bolt grade	**8.8**	
Welds	**Tension flange fillet weld**	**9 mm**
	Web fillet weld	**8 mm**
	Compression flange fillet weld	**8 mm**

Supporting column section	**457 x 191 x 98 UB**
Beam / Rafter section	**305 x 165 x 46 UB**
Haunch section	**356 x 171 x 51 UB**

Column stiffener details

No enhancement of the column is required.

Location: Ex1 - With compression & full depth tension stiffeners

Bolted flush end plate eaves connection - beam to column

The connection under consideration is assumed to be attached to the supporting column flange. Calculations are in accordance with EC3 Parts 1-1, 1-5, 1-8 and follow the procedure given in the SCI P398 entitled 'Joints in Steel Construction Moment-Resisting Joints to Eurocode 3'.
The connection is one sided. The web panel shear cannot be discounted in the determination of the compressive force.

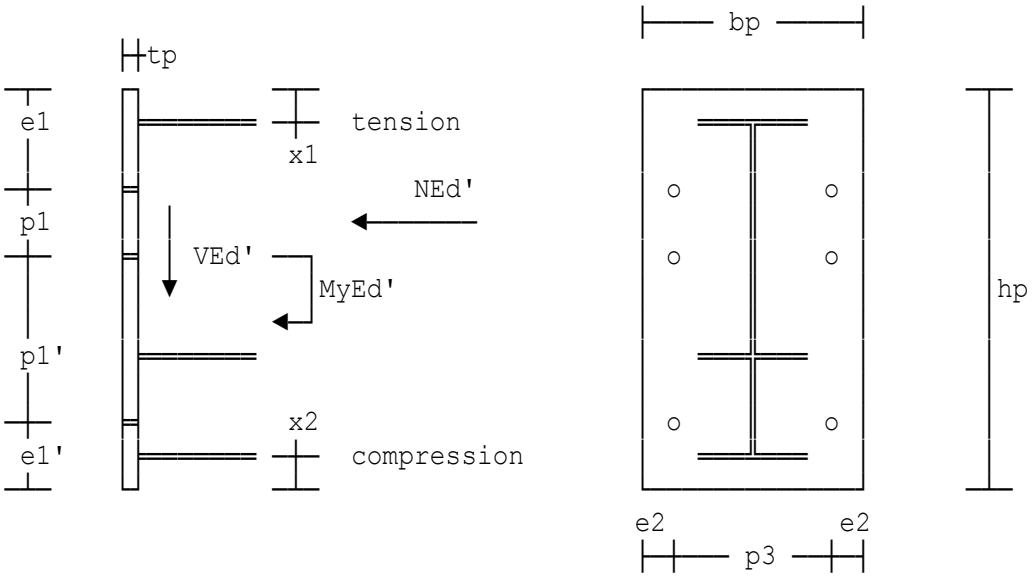

Factored moment	MyEd'=724 kNm
Factored shear force	VEd'=304 kN
Axial force (+ve compression)	NEd'=102 kN

Supporting column details

610 x 229 x 101 UKB

Supported rafter section details - parent section

457 x 191 x 74 UKB

Section properties - haunch cutting

533 x 210 x 82 UKB

Combined properties and restrictions

Pitch of rafter	Theta=10°
Vertical overall depth	ho=900 mm
Haunch angle to end plate	phi'=78°

Bolt details

Diameter of bolts	db=24 mm
Tensile resistance (EC3 Part 1-8)	FtRd=k2*fub*At/(gamM2*10^3)=203.33 kN

End plate details

Thickness of plate	tp=20 mm
Total number of bolts	bn=12
Number of shear bolts	ns=4
Distance to beam flange	x1=15 mm
Distance to first row of bolts	e1=75 mm
Pitch of tension bolts	p1=75 mm
Edge distance for shear bolts	e1'=110 mm
Over-all length of end plate	hp=965 mm
Bolt cross-centres	p3=90 mm
Width of end plate	bp=200 mm
Assumed web fillet weld size	sww=8 mm
Assumed flange fillet weld size	swf=10 mm

SUMMARY OF BOLT POTENTIAL RESISTANCES

Top row of bolts	Pr1=310.03 kN
Row 2	Pr2=258.66 kN
Row 3	Pr3=152.68 kN
Row 4	Pr4=152.68 kN
Design axial load on column	NEdc=500 kN
Resistance of beam flange	FcRdf=1016 kN
Weld size (leg length)	ss=8 mm

As MyEd > McRd (656.61 kNm > 638.57 kNm), the applied moment exceeds the moment resistance. Tension stiffeners are required.

Stiffener width	bsgt=90 mm
Proposed rib stiffener thickness	tsr=15 mm
Proposed weld size	ssr=12 mm
Selected fillet weld size	swt=12 mm
Selected fillet weld size	sfw=8 mm

REVERSED MOMENT CONDITION

Factored moment	MrEd=237 kNm
Factored shear force	VrEd=43 kN
Axial force (+ve compression)	NrEd=-56 kN

CONNECTION SUMMARY - all dimensions in diagram are in mm

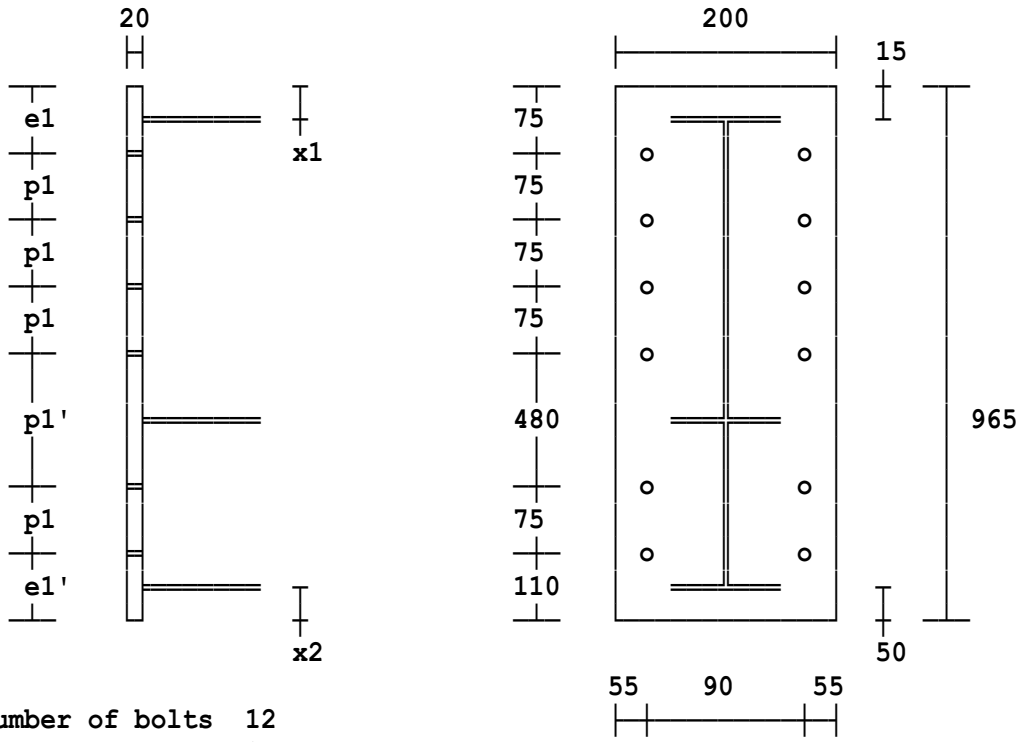

Number of bolts	**12**	
Bolt diameter	**24 mm**	
Bolt grade	**8.8**	
Welds	**Tension flange fillet weld**	**12 mm**
	Web fillet weld	**8 mm**
	Compression flange fillet weld	**8 mm**

Supporting column section	**610 x 229 x 101 UKB**
Beam / Rafter section	**457 x 191 x 74 UKB**
Haunch section	**533 x 210 x 82 UKB**

Column stiffener details

Compression stiffeners	**2/90 mm x 20 mm Grade S 275 connected by 4/8 mm fillet welds.**
Tension stiffeners	**Full depth 15 mm thick. 2/90 mm wide placed midway between the following bolt rows: 1 and 2 2 and 3 3 and 4**

Location: Ex2 - With compression stiffeners only

Bolted flush end plate eaves connection - beam to column

The connection under consideration is assumed to be attached to the supporting column flange. Calculations are in accordance with EC3 Parts 1-1, 1-5, 1-8 and follow the procedure given in the SCI P398 entitled 'Joints in Steel Construction Moment-Resisting Joints to Eurocode 3'.
The connection is one sided. The web panel shear cannot be discounted in the determination of the compressive force.

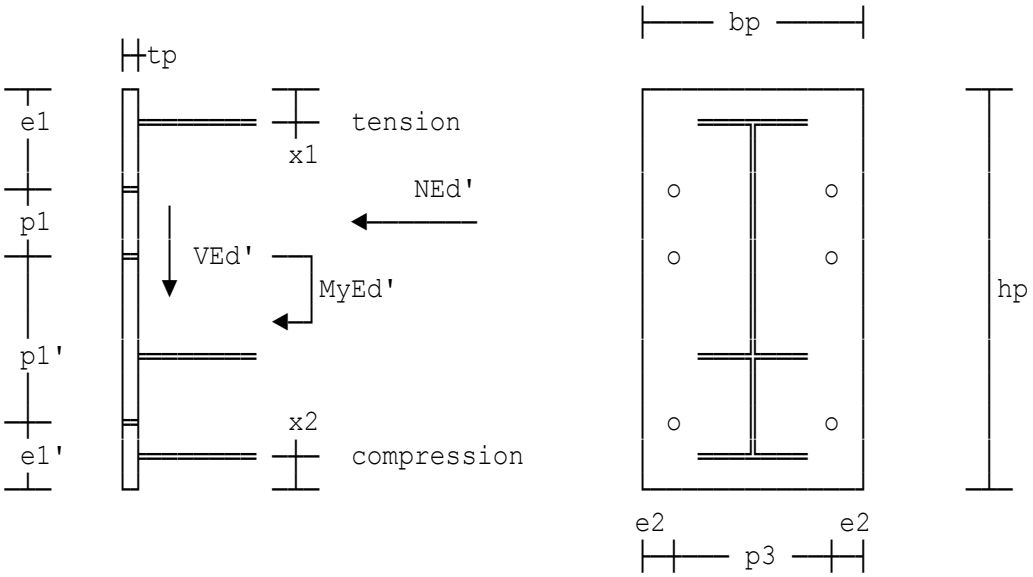

Factored moment	MyEd'=735 kNm
Factored shear force	VEd'=304 kN
Axial force (+ve compression)	NEd'=102 kN

Supporting column details

610 x 229 x 101 UKB

Supported rafter section details - parent section

457 x 191 x 74 UKB

Section properties - haunch cutting

533 x 210 x 82 UKB

Combined properties and restrictions

Pitch of rafter	Theta=10°
Vertical overall depth	ho=950 mm
Haunch angle to end plate	phi'=78°

Bolt details

Diameter of bolts	db=24 mm
Tensile resistance (EC3 Part 1-8)	FtRd=k2*fub*At/(gamM2*10^3)=203.33 kN

End plate details

Thickness of plate	tp=20 mm
Total number of bolts	bn=14
Number of shear bolts	ns=4
Distance to beam flange	x1=15 mm
Distance to first row of bolts	e1=75 mm
Pitch of tension bolts	p1=70 mm
Edge distance for shear bolts	e1'=75 mm
Over-all length of end plate	hp=1000 mm
Bolt cross-centres	p3=90 mm
Width of end plate	bp=200 mm
Assumed web fillet weld size	sww=8 mm
Assumed flange fillet weld size	swf=10 mm

SUMMARY OF BOLT POTENTIAL RESISTANCES

Top row of bolts	Pr1=310.03 kN
Row 2	Pr2=248.49 kN
Row 3	Pr3=142.5 kN
Row 4	Pr4=142.5 kN
Row 5	Pr5=142.5 kN
Design axial load on column	NEdc=500 kN
Resistance of beam flange	FcRdf=1016 kN
Weld size (leg length)	ss=8 mm
Selected fillet weld size	swt=12 mm
Selected fillet weld size	sfw=8 mm

CONNECTION SUMMARY - all dimensions in diagram are in mm

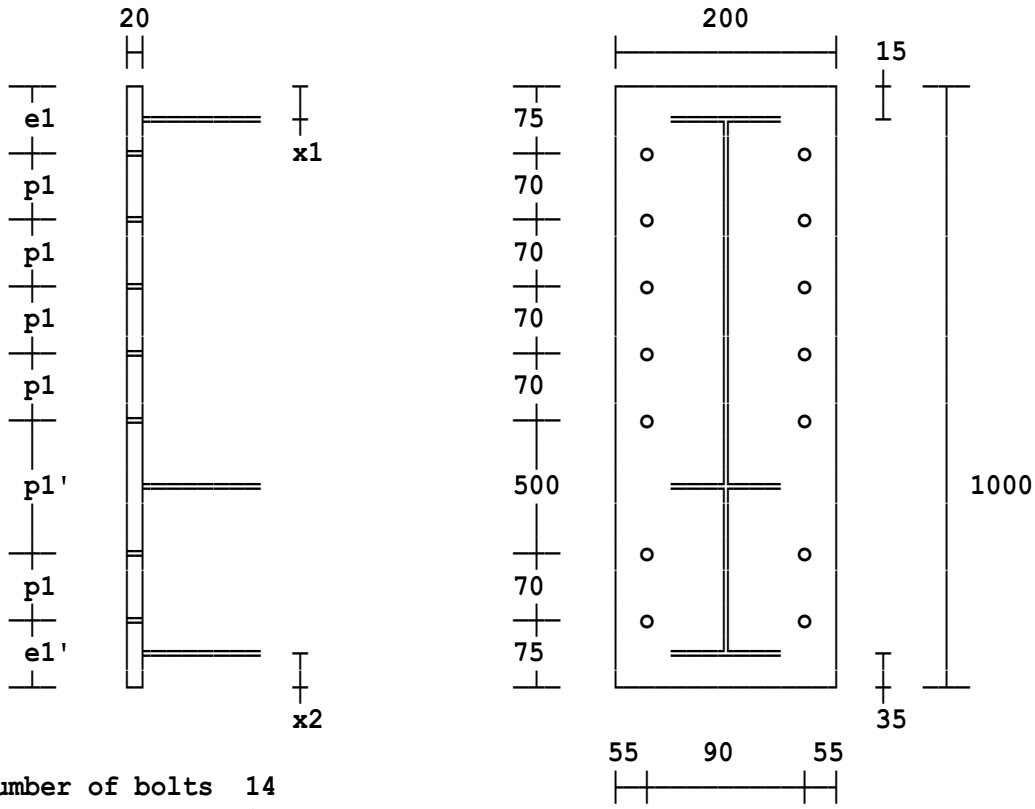

Number of bolts	**14**	
Bolt diameter	**24 mm**	
Bolt grade	**8.8**	
Welds	**Tension flange fillet weld**	**12 mm**
	Web fillet weld	**8 mm**
	Compression flange fillet weld	**10 mm**

Supporting column section	**610 x 229 x 101 UKB**
Beam / Rafter section	**457 x 191 x 74 UKB**
Haunch section	**533 x 210 x 82 UKB**

Column stiffener details

Compression stiffeners	**2/90 mm x 30 mm Grade S 275 connected by 4/8 mm fillet welds.**

Location: Ex3 - With compression & full depth tension stiffeners

Bolted flush end plate eaves connection - beam to column

The connection under consideration is assumed to be attached to the supporting column flange. Calculations are in accordance with EC3 Parts 1-1, 1-5, 1-8 and follow the procedure given in the SCI P398 entitled 'Joints in Steel Construction Moment-Resisting Joints to Eurocode 3'.
Beams are connected to both column flanges. The web panel shear can be discounted in the determination of the compressive force as the connection is assumed to have balanced moments.

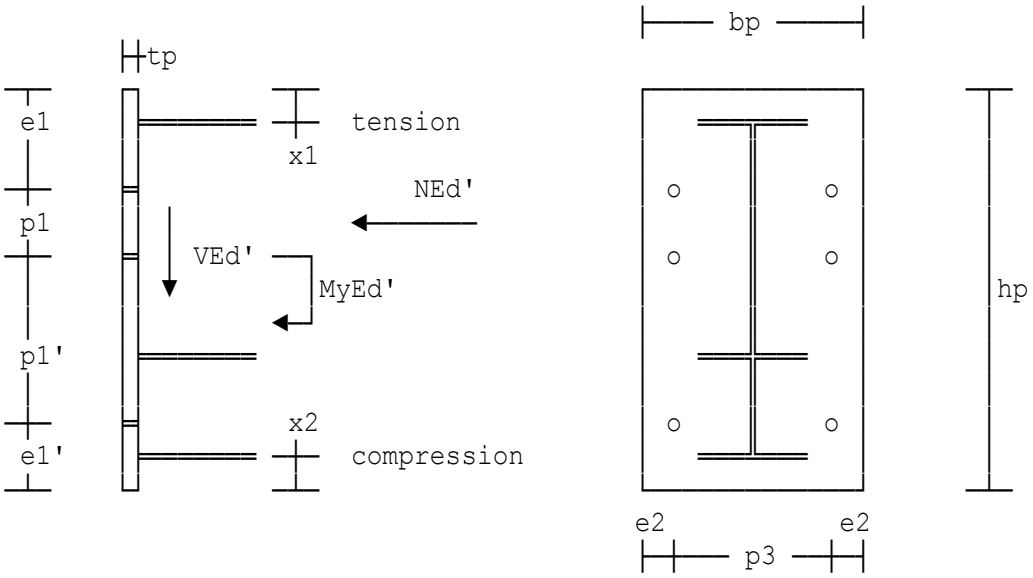

Factored moment	MyEd'=612 kNm
Factored shear force	VEd'=214 kN
Axial force (+ve compression)	NEd'=95 kN

Supporting column details

610 x 229 x 101 UKB

Supported rafter section details - parent section

406 x 178 x 74 UKB

Section properties - haunch cutting

533 x 210 x 82 UKB

Combined properties and restrictions

Pitch of rafter	Theta=15°
Vertical overall depth	ho=850 mm
Haunch angle to end plate	phi'=67°

Bolt details

Diameter of bolts	db=24 mm
Tensile resistance (EC3 Part 1-8)	FtRd=k2*fub*At/(gamM2*10^3)=203.33 kN

End plate details

Thickness of plate	tp=20 mm
Total number of bolts	bn=10
Number of shear bolts	ns=4
Distance to beam flange	x1=20 mm
Distance to first row of bolts	e1=80 mm
Pitch of tension bolts	p1=90 mm
Edge distance for shear bolts	e1'=130 mm
Over-all length of end plate	hp=935 mm
Bolt cross-centres	p3=90 mm
Width of end plate	bp=200 mm
Assumed web fillet weld size	sww=8 mm
Assumed flange fillet weld size	swf=10 mm

SUMMARY OF BOLT POTENTIAL RESISTANCES

Top row of bolts	Pr1=310.03 kN
Row 2	Pr2=274.98 kN
Row 3	Pr3=197.44 kN
Design axial load on column	NEdc=500 kN
Resistance of beam flange	FcRdf=1016 kN
Weld size (leg length)	ss=8 mm

As MyEd > McRd (552.31 kNm > 542.87 kNm), the applied moment exceeds the moment resistance. Tension stiffeners are required.

Stiffener width	bsgt=90 mm
Proposed rib stiffener thickness	tsr=15 mm
Proposed weld size	ssr=11 mm
Selected fillet weld size	swt=12 mm
Selected fillet weld size	sfw=8 mm

CONNECTION SUMMARY - all dimensions in diagram are in mm

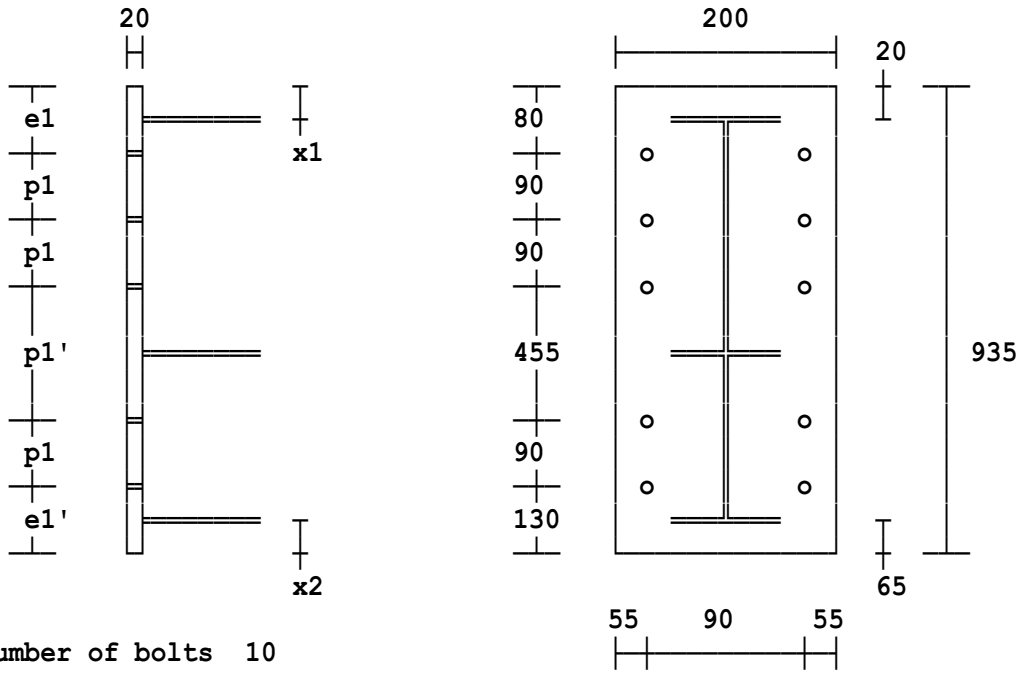

Number of bolts	**10**	
Bolt diameter	**24 mm**	
Bolt grade	**Preloaded HSFG bolts**	
	General grade (8.8) with grade 10 nuts.	
Welds	**Tension flange fillet weld**	**12 mm**
	Web fillet weld	**8 mm**
	Compression flange fillet weld	**10 mm**

Supporting column section	**610 x 229 x 101 UKB**
Beam / Rafter section	**406 x 178 x 74 UKB**
Haunch section	**533 x 210 x 82 UKB**

Column stiffener details

Compression stiffeners	**2/90 mm x 20 mm Grade S 275**
	connected by 4/8 mm fillet welds.
Tension stiffeners	**Full depth 15 mm thick.**
	2/90 mm wide placed midway
	between the following bolt rows:
	1 and 2
	2 and 3

Location: Ex4 - Connection with no stiffeners

Bolted flush end plate eaves connection - beam to column

The connection under consideration is assumed to be attached to the supporting column flange. Calculations are in accordance with EC3 Parts 1-1, 1-5, 1-8 and follow the procedure given in the SCI P398 entitled 'Joints in Steel Construction Moment-Resisting Joints to Eurocode 3'.
Beams are connected to both column flanges. The web panel shear can be discounted in the determination of the compressive force as the connection is assumed to have balanced moments.

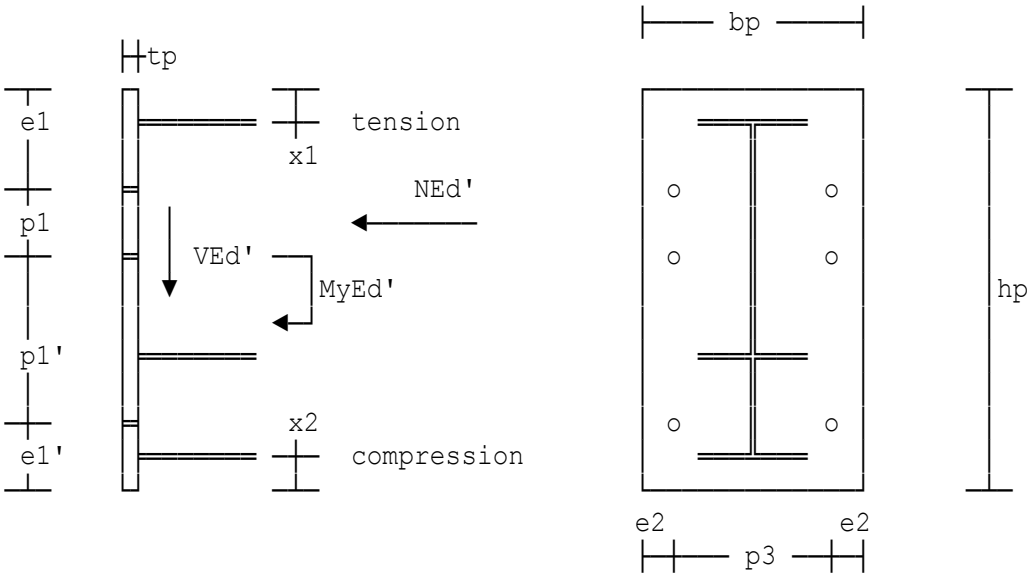

Factored moment	MyEd'=165 kNm
Factored shear force	VEd'=94 kN
Axial force (+ve compression)	NEd'=56 kN

Supporting column details

457 x 191 x 98 UKB

Supported rafter section details - parent section

305 x 165 x 46 UKB

Section properties - haunch cutting

356 x 171 x 51 UKB

Combined properties and restrictions

Pitch of rafter	Theta=15°
Vertical overall depth	ho=550 mm
Haunch angle to end plate	phi'=63°

Bolt details

Diameter of bolts	db=20 mm
Tensile resistance (EC3 Part 1-8)	FtRd=k2*fub*At/(gamM2*10^3)=141.12 kN

End plate details

Thickness of plate	tp=16 mm
Total number of bolts	bn=6
Number of shear bolts	ns=2
Distance to beam flange	x1=20 mm
Distance to first row of bolts	e1=80 mm
Pitch of tension bolts	p1=90 mm
Distance tension to shear bolts	p1'=315 mm
Edge distance for shear bolts	e1'=130 mm
Bolt cross-centres	p3=90 mm
Width of end plate	bp=180 mm
Assumed web fillet weld size	sww=8 mm
Assumed flange fillet weld size	swf=8 mm

SUMMARY OF BOLT POTENTIAL RESISTANCES

Top row of bolts	Pr1=244.34 kN
Row 2	Pr2=199.51 kN
Design axial load on column	NEdc=500 kN
Resistance of beam flange	FcRdf=759 kN
Selected fillet weld size	swt=9 mm
Selected fillet weld size	sfw=8 mm

REVERSED MOMENT CONDITION

Factored moment	MrEd=98 kNm
Factored shear force	VrEd=33 kN
Axial force (+ve compression)	NrEd=-23 kN

CONNECTION SUMMARY - all dimensions in diagram are in mm

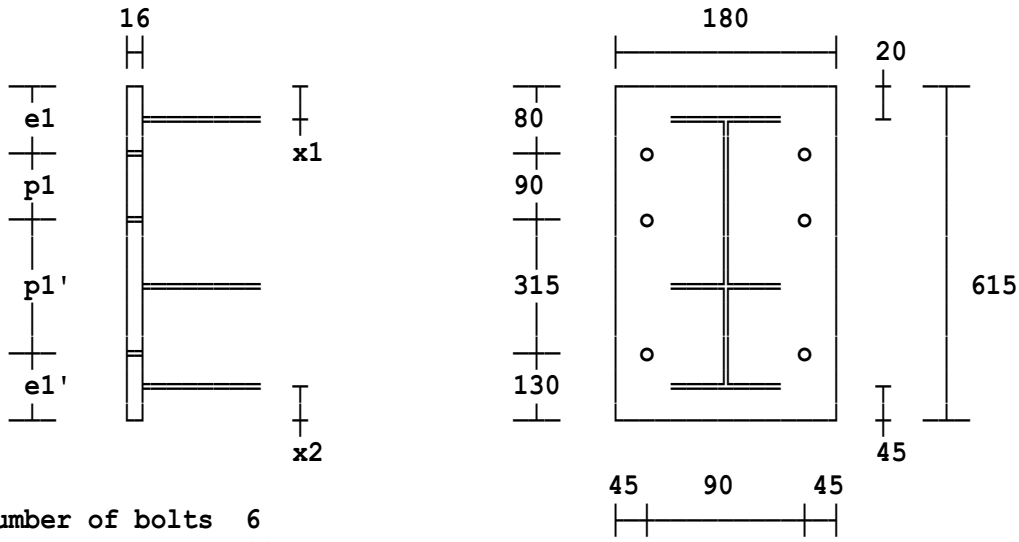

Number of bolts	**6**	
Bolt diameter	**20 mm**	
Bolt grade	**8.8**	
Welds	**Tension flange fillet weld**	**9 mm**
	Web fillet weld	**8 mm**
	Compression flange fillet weld	**8 mm**

Supporting column section	**457 x 191 x 98 UKB**
Beam / Rafter section	**305 x 165 x 46 UKB**
Haunch section	**356 x 171 x 51 UKB**

Column stiffener details

No enhancement of the column is required.

Location: Ex5 - With diagonal shear stiffeners

Bolted flush end plate eaves connection - beam to column

The connection under consideration is assumed to be attached to the supporting column flange. Calculations are in accordance with EC3 Parts 1-1, 1-5, 1-8 and follow the procedure given in the SCI P398 entitled 'Joints in Steel Construction Moment-Resisting Joints to Eurocode 3'.
The connection is one sided. The web panel shear cannot be discounted in the determination of the compressive force.

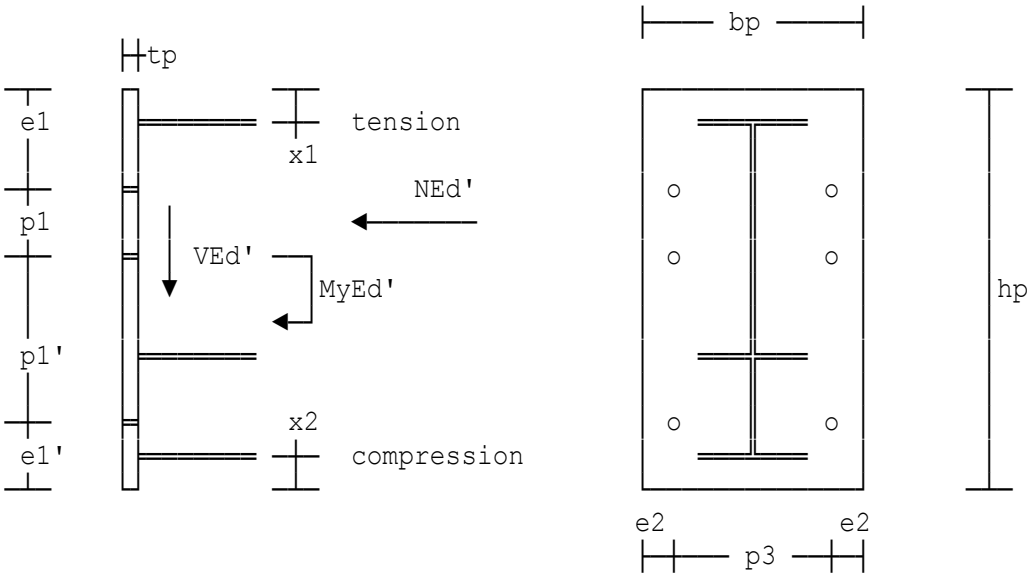

Factored moment	MyEd'=950 kNm
Factored shear force	VEd'=300 kN
Axial force (+ve compression)	NEd'=100 kN

Supporting column details

610 x 229 x 101 UKB

Supported rafter section details - parent section

457 x 191 x 74 UKB

Section properties - haunch cutting

533 x 210 x 82 UKB

Combined properties and restrictions

Pitch of rafter	Theta=10°
Vertical overall depth	ho=950 mm
Haunch angle to end plate	phi'=78°

Bolt details

Diameter of bolts	db=30 mm
Tensile resistance (EC3 Part 1-8)	FtRd=k2*fub*At/(gamM2*10^3)=323.14 kN

End plate details

Thickness of plate	tp=20 mm
Total number of bolts	bn=12
Number of shear bolts	ns=2
Distance to beam flange	x1=15 mm
Distance to first row of bolts	e1=70 mm
Pitch of tension bolts	p1=75 mm
Edge distance for shear bolts	e1'=120 mm
Over-all length of end plate	hp=1035 mm
Bolt cross-centres	p3=90 mm
Width of end plate	bp=200 mm
Assumed web fillet weld size	sww=8 mm
Assumed flange fillet weld size	swf=10 mm

SUMMARY OF BOLT POTENTIAL RESISTANCES

Top row of bolts	Pr1=378.47 kN
Row 2	Pr2=190.22 kN
Row 3	Pr3=152.68 kN
Row 4	Pr4=152.68 kN
Row 5	Pr5=152.68 kN
Design axial load on column	NEdc=500 kN
Resistance of beam flange	FcRdf=1016 kN
Weld size	sc=8 mm
Weld size (leg length)	ss=8 mm

As MyEd > McRd (878.93 kNm > 760.9 kNm), the applied moment exceeds the moment resistance. Tension stiffeners are required.

Tension stiffener width	bsgt=150 mm
Proposed rib stiffener thickness	tsr=20 mm
Proposed weld size	ssr=12 mm
Selected fillet weld size	swt=15 mm
Selected fillet weld size	sfw=8 mm

CONNECTION SUMMARY - all dimensions in diagram are in mm

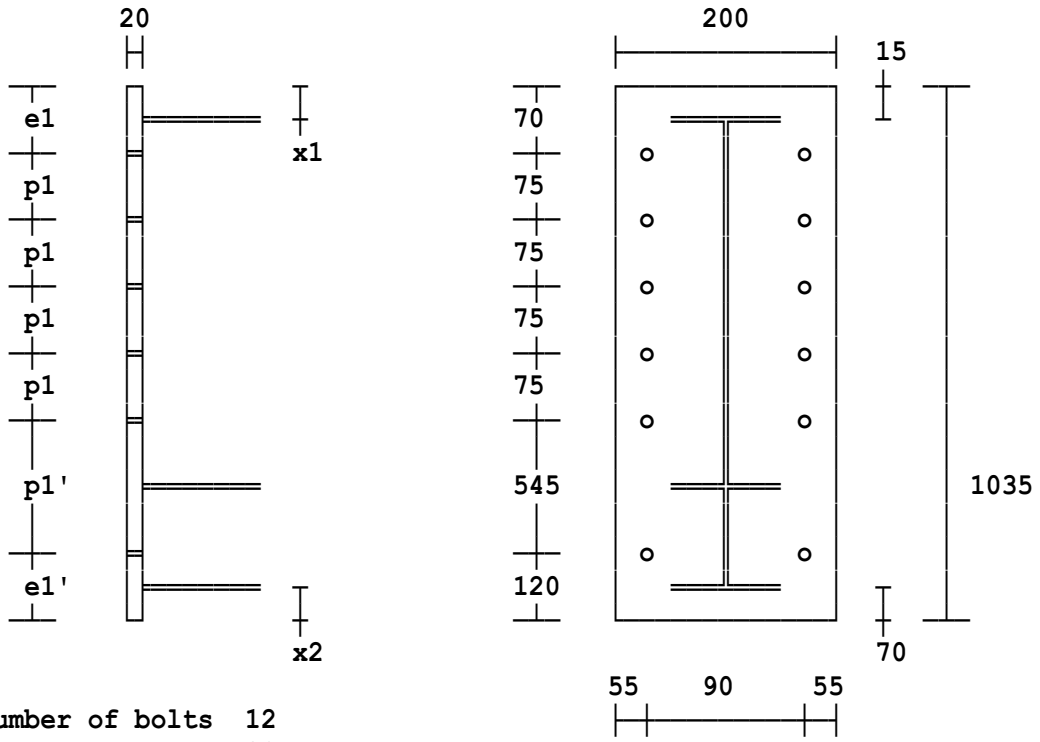

Number of bolts	**12**	
Bolt diameter	**30 mm**	
Bolt grade	**8.8**	
Welds	**Tension flange fillet weld**	**15 mm**
	Web fillet weld	**8 mm**
	Compression flange fillet weld	**8 mm**

Supporting column section	**610 x 229 x 101 UKB**
Beam / Rafter section	**457 x 191 x 74 UKB**
Haunch section	**533 x 210 x 82 UKB**

Column stiffener details

Diagonal shear stiffeners	**2/100 mm x 15 mm Grade S 275 on line between the beam tension and compression surfaces connected by 4/8 mm fillet welds.**
Compression stiffeners	**2/108 mm x 20 mm Grade S 275 connected by 4/8 mm fillet welds.**
Tension stiffeners	**Provide 20 mm thick full depth tension stiffeners placed midway between bolt rows 1 and 2. Any remaining ribs are partial depth see code for curtailment length. 2/150 mm wide placed midway between the following bolt rows: 2 and 3 3 and 4**

Location: Ex6 - Six bolts (bn=6 and ns=2)

Bolted flush end plate eaves connection - beam to column

The connection under consideration is assumed to be attached to the supporting column flange. Calculations are in accordance with EC3 Parts 1-1, 1-5, 1-8 and follow the procedure given in the SCI P398 entitled 'Joints in Steel Construction Moment-Resisting Joints to Eurocode 3'.
The connection is one sided. The web panel shear cannot be discounted in the determination of the compressive force.

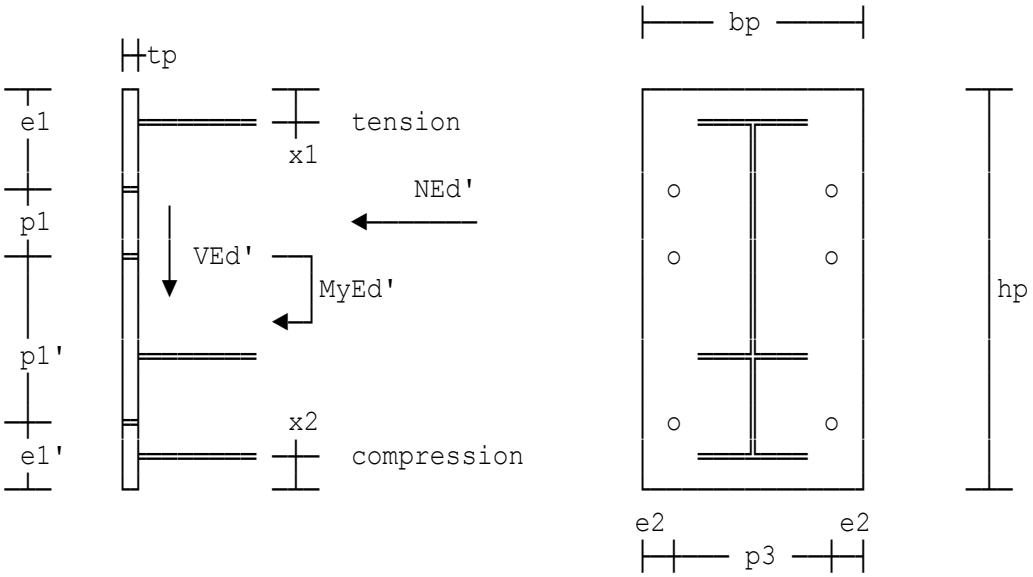

Factored moment	MyEd'=80 kNm
Factored shear force	VEd'=126 kN
Axial force (+ve compression)	NEd'=26 kN

Supporting column details

203 x 203 x 60 UKC

Supported rafter section details - parent section

203 x 203 x 60 UKC

Section properties - haunch cutting

203 x 203 x 60 UKC

Combined properties and restrictions

Pitch of rafter	Theta=1°
Vertical overall depth	ho=400 mm
Haunch angle to end plate	phi'=55°

Bolt details

Diameter of bolts	db=20 mm
Tensile resistance (EC3 Part 1-8)	FtRd=k2*fub*At/(gamM2*10^3)=141.12 kN

End plate details

Thickness of plate	tp=12 mm
Total number of bolts	bn=6
Number of shear bolts	ns=2
Distance to beam flange	x1=25 mm
Distance to first row of bolts	e1=83 mm
Pitch of tension bolts	p1=93 mm
Edge distance for shear bolts	e1'=90 mm
Over-all length of end plate	hp=455 mm
Bolt cross-centres	p3=120 mm
Width of end plate	bp=205 mm
Assumed web fillet weld size	sww=8 mm
Assumed flange fillet weld size	swf=10 mm

SUMMARY OF BOLT POTENTIAL RESISTANCES

Top row of bolts	Pr1=185.12 kN
Row 2	Pr2=115.74 kN
Design axial load on column	NEdc=126 kN
Resistance of beam flange	FcRdf=1120 kN
Weld size (leg length)	ss=8 mm
Selected fillet weld size	swt=8 mm
Selected fillet weld size	sfw=8 mm

CONNECTION SUMMARY - all dimensions in diagram are in mm

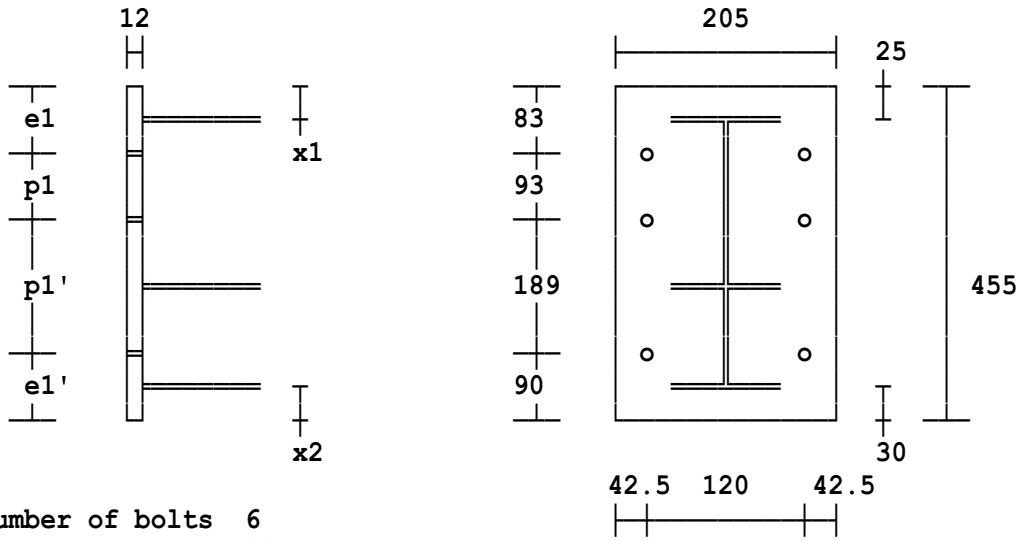

Number of bolts	**6**	
Bolt diameter	**20 mm**	
Bolt grade	**8.8**	
Welds	**Tension flange fillet weld**	**8 mm**
	Web fillet weld	**8 mm**
	Compression flange fillet weld	**8 mm**

Supporting column section	**203 x 203 x 60 UKC**
Beam / Rafter section	**203 x 203 x 60 UKC**
Haunch section	**203 x 203 x 60 UKC**

Column stiffener details

Compression stiffeners **2/95 mm x 12 mm Grade S 275**
connected by 4/8 mm fillet welds.

Location: Ex1 - Connection with compression and tension stiffener

Bolted extended end plate eaves connection - beam to column

Calculations are in accordance with BS5950-1:2000 and follow the procedure given in the SCI publication entitled 'Joints in Steel Construction Moment Connections'.
The connection is one sided. The web panel shear cannot be discounted in the determination of the compressive force.

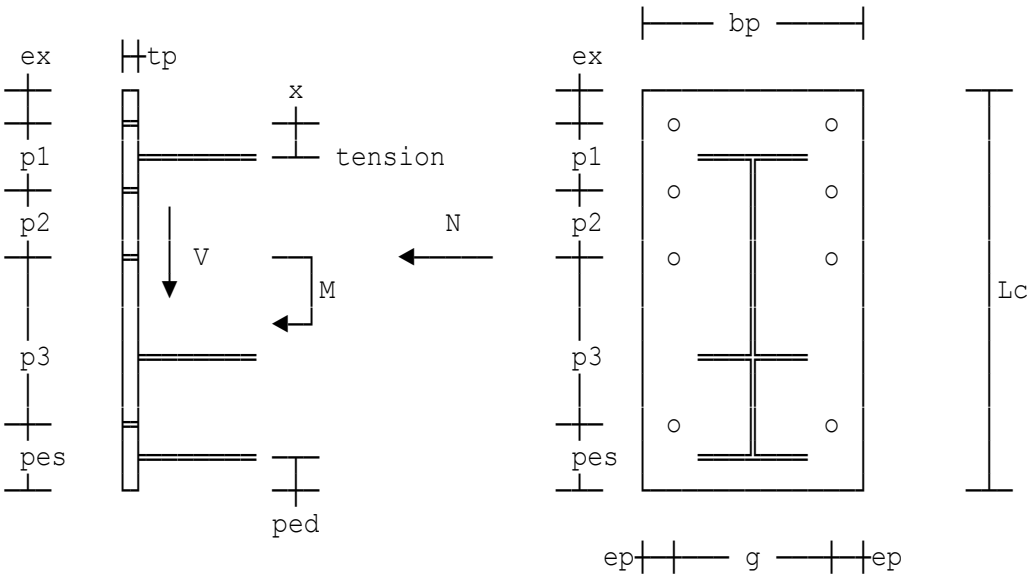

Factored moment	Ma=824 kNm
Factored shear force	Va=354 kN
Axial force (+ve compression)	Na=121 kN

Supporting column details

610 x 229 x 101 UB.

Supported rafter section properties - parent section

457 x 191 x 74 UB.

Section properties -haunch cutting

533 x 210 x 82 UB.

Combined properties & restrictions

Pitch of rafter (in degrees)	Theta=10
Vertical overall depth	Do=925 mm
Haunch angle to end plate	phi'=78°

Diameter of bolts	bd=24 mm
Thickness of plate	tp=20 mm
Total number of bolts	bn=14
Number of shear bolts	ns=4
Distance to first row of bolts	ex=50 mm
Distance to beam flange	x=40 mm
Pitch to second row of bolts	p1=100 mm
Pitch of tension bolts	p2=90 mm
Edge distance for shear bolts	pes=130 mm
Over-all length of end plate	Lc=1060 mm
Bolt cross-centres	g=90 mm
Width of end plate	bp=200 mm
Assumed web fillet weld size	sww=8 mm
Assumed flange fillet weld size	swf=12 mm

SUMMARY OF BOLT POTENTIAL RESISTANCES

Top row of bolts	Pr1=297.13 kN
Row 2	Pr2=279.84 kN
Row 3	Pr3=225.82 kN
Row 4	Pr4=183.21 kN
Row 5	Pr5=183.21 kN
Weld size	ss=8 mm

Applied moment exceeds moment capacity (741.03 kNm > 739.43 kNm).

Stiffener width	bsgt=100 mm
Proposed rib thickness	tsr=15 mm
Proposed weld size	ssr=12 mm
Selected fillet weld size	swt=10
Selected fillet weld size	sfw=8 mm
Factored moment	Mr=385 kNm
Factored shear force	Vr=178 kN
Axial force (+ve compression)	Nr=-56 kN

CONNECTION SUMMARY - all dimensions in diagram are in mm

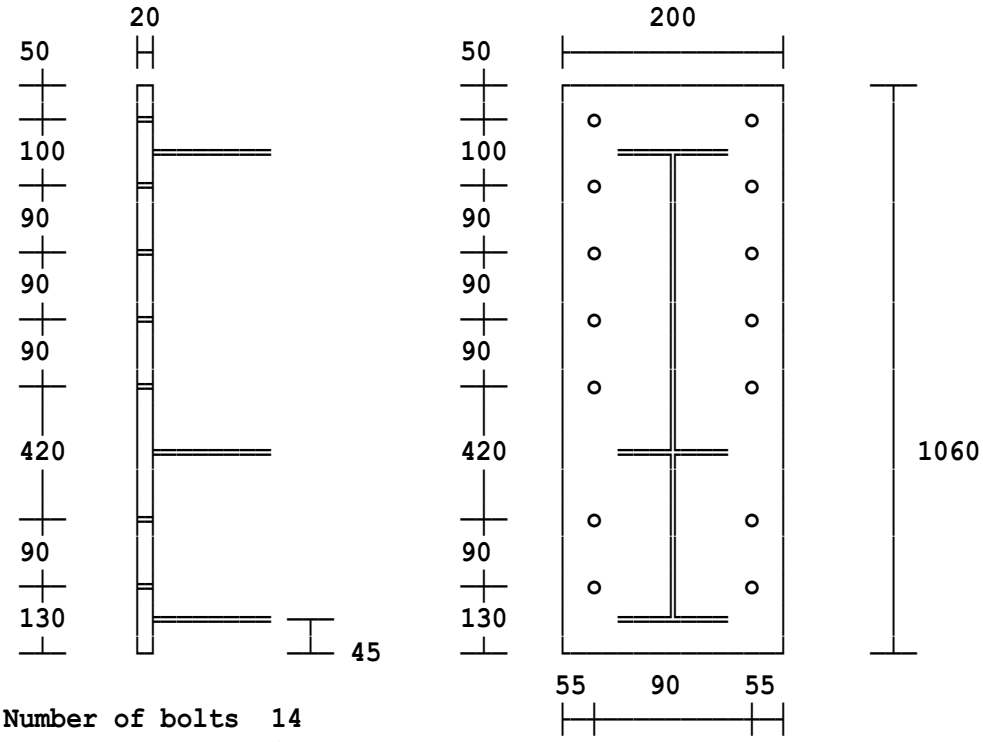

Number of bolts 14
Bolt diameter 24 mm
Bolt grade 8.8

Welds	**Tension flange fillet weld**	**10 mm**
	Web fillet weld	**8 mm**
	Compression flange fillet weld	**8 mm**

Supporting column section 610 x 229 x 101 UB
Beam / Rafter section 457 x 191 x 74 UB
Haunch section 533 x 210 x 82 UB

Column stiffener details

Compression stiffeners 2/90 mm x 30 mm Grade S 275 connected by 4/8 mm fillet welds.

Tension stiffeners Full depth 15 mm thick.
2/100 mm wide placed midway between the following bolt rows:
1 and 2
2 and 3
3 and 4
4 and 5

Location: Ex2 - One sided connection with a compression stiffener

Bolted extended end plate eaves connection - beam to column

Calculations are in accordance with BS5950-1:2000 and follow the procedure given in the SCI publication entitled 'Joints in Steel Construction Moment Connections'.
The connection is one sided. The web panel shear cannot be discounted in the determination of the compressive force.

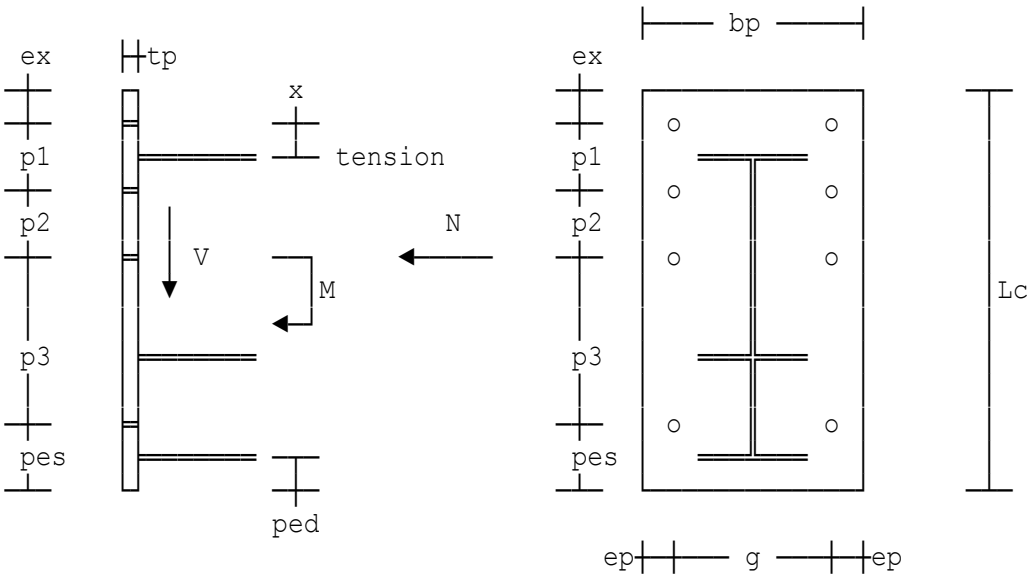

Factored moment	Ma=134 kNm
Factored shear force	Va=56 kN
Axial force (+ve compression)	Na=27 kN

Supporting column details

406 x 178 x 54 UB.

Supported rafter section properties - parent section

254 x 146 x 37 UB.

Section properties -haunch cutting

305 x 165 x 46 UB.

Combined properties & restrictions

Pitch of rafter (in degrees)	Theta=8
Vertical overall depth	Do=450 mm
Haunch angle to end plate	phi'=65°

Diameter of bolts	bd=24 mm
Thickness of plate	tp=20 mm
Total number of bolts	bn=8
Number of shear bolts	ns=4
Distance to first row of bolts	ex=50 mm
Distance to beam flange	x=40 mm
Pitch to second row of bolts	p1=100 mm
Pitch of shear bolts	p2=90 mm
Distance tension to shear bolts	p3=220 mm
Edge distance for shear bolts	pes=130 mm
Bolt cross-centres	g=90 mm
Width of end plate	bp=180 mm
Assumed web fillet weld size	sww=8 mm
Assumed flange fillet weld size	swf=8 mm

SUMMARY OF BOLT POTENTIAL RESISTANCES

Top row of bolts	Pr1=184.98 kN
Row 2	Pr2=99.038 kN
Weld size	ss=8 mm
Selected fillet weld size	swt=8
Selected fillet weld size	sfw=8 mm
Factored moment	Mr=68 kNm
Factored shear force	Vr=37 kN
Axial force (+ve compression)	Nr=-34 kN

CONNECTION SUMMARY - all dimensions in diagram are in mm

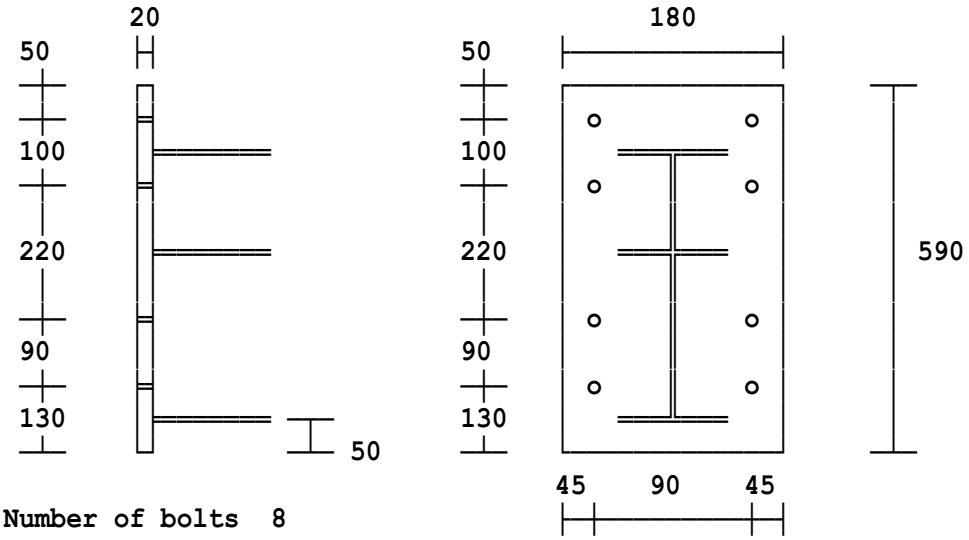

Number of bolts 8
Bolt diameter 24 mm
Bolt grade 8.8

Welds	**Tension flange fillet weld**	**8 mm**
	Web fillet weld	**8 mm**
	Compression flange fillet weld	**8 mm**

Supporting column section 406 x 178 x 54 UB
Beam / Rafter section 254 x 146 x 37 UB
Haunch section 305 x 165 x 46 UB

Column stiffener details

Compression stiffeners 2/80 mm x 10 mm Grade S 275
connected by 4/8 mm fillet welds.

Location: Ex3 - Double sided connection, HSFG bolts, heavy shear

Bolted extended end plate eaves connection - beam to column

Calculations are in accordance with BS5950-1:2000 and follow the procedure given in the SCI publication entitled 'Joints in Steel Construction Moment Connections'.
Beams are connected to both column flanges. The web panel shear can be discounted in the determination of the compressive force as the connection is assumed to have balanced moments.

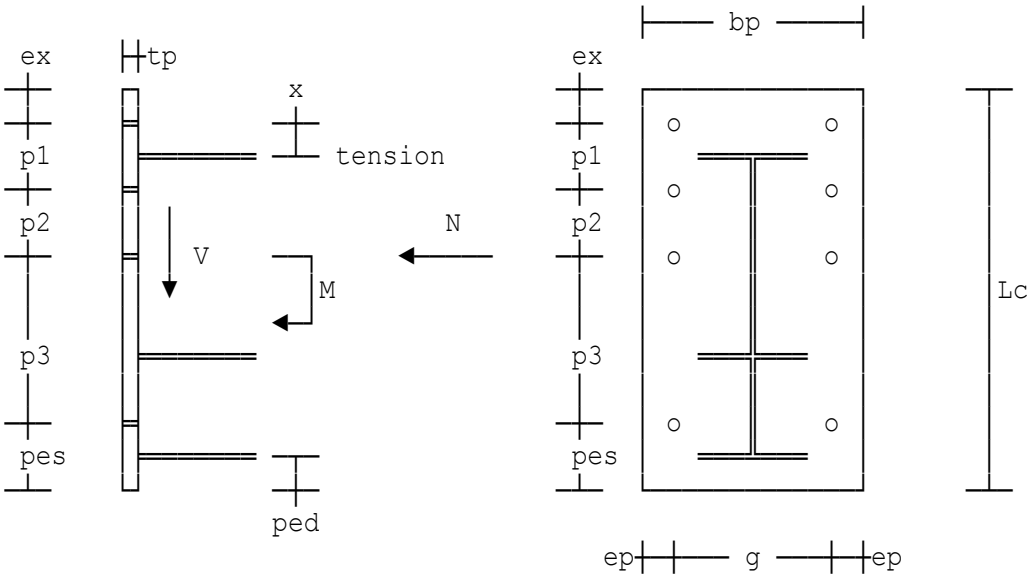

Factored moment	Ma=328 kNm
Factored shear force	Va=487 kN
Axial force (+ve compression)	Na=-34 kN

Supporting column details

254 x 254 x 89 UC.

Supported rafter section properties - parent section

356 x 127 x 33 UB.

Section properties -haunch cutting

406 x 140 x 39 UB.

Combined properties & restrictions

Pitch of rafter (in degrees)	Theta=0
Vertical overall depth	Do=710 mm
Haunch angle to end plate	phi'=50°

Diameter of bolts	bd=24 mm
Thickness of plate	tp=20 mm
Total number of bolts	bn=14
Number of shear bolts	ns=6
Distance to first row of bolts	ex=50 mm
Distance to beam flange	x=40 mm
Pitch to second row of bolts	p1=100 mm
Pitch of tension bolts	p2=90 mm
Distance tension to shear bolts	p3=200 mm
Edge distance for shear bolts	pes=130 mm
Bolt cross-centres	g=90 mm
Width of end plate	bp=200 mm
Assumed web fillet weld size	sww=8 mm
Assumed flange fillet weld size	swf=12 mm

SUMMARY OF BOLT POTENTIAL RESISTANCES

Top row of bolts	Pr1=308.9 kN
Row 2	Pr2=342.15 kN
Row 3	Pr3=256.91 kN
Row 4	Pr4=148.5 kN
Weld size	ss=8 mm
Slip factor for preloaded bolts	mu=0.5
Coefficient for type of hole	Ks=1
Selected fillet weld size	swt=8
Selected fillet weld size	sfw=10 mm

CONNECTION SUMMARY - all dimensions in diagram are in mm

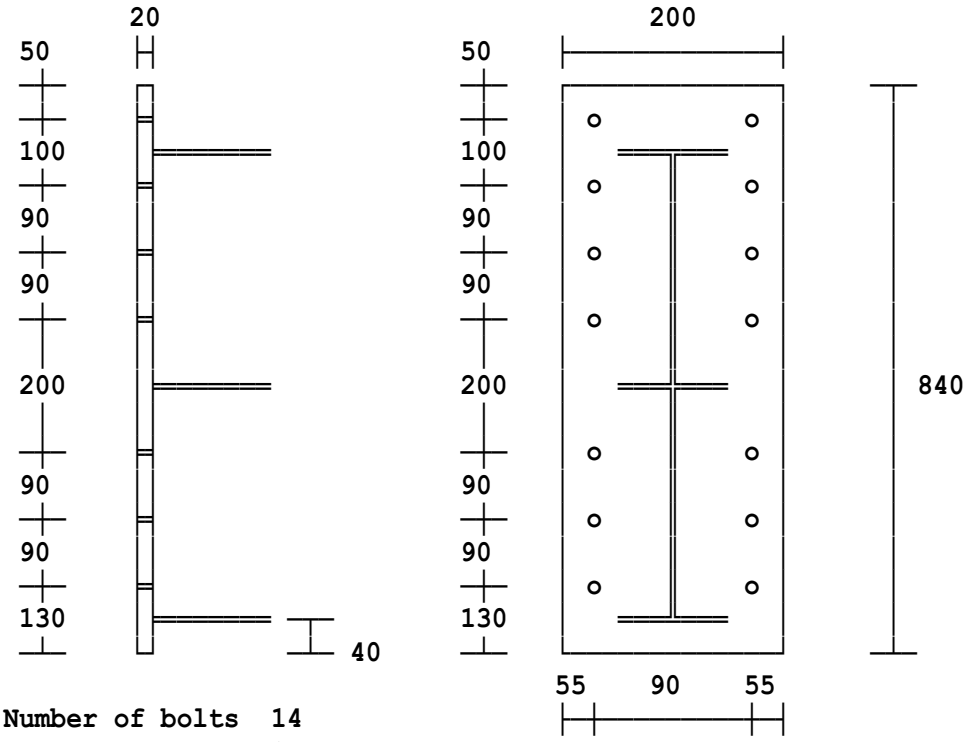

Number of bolts 14
Bolt diameter 24 mm
Bolt grade HSFG
General grade (8.8) to BS4395 Part 1. Nuts grade 10.

Welds	**Tension flange fillet weld**	**8 mm**
	Web fillet weld	**10 mm**
	Compression flange fillet weld	**10 mm**
Supporting column section	**254 x 254 x 89 UC**	
Beam / Rafter section	**356 x 127 x 33 UB**	
Haunch section	**406 x 140 x 39 UB**	

Column stiffener details

Compression stiffeners **2/90 mm x 20 mm Grade S 275 connected by 4/8 mm fillet welds.**

Location: Ex1 - Connection with compression and tension stiffeners

Bolted extended end plate eaves connection - beam to column

Calculations are in accordance with EC3 Parts 1-1, 1-5, 1-8 and follow the procedure given in the SCI publication P398 entitled 'Joints in Steel Construction Moment-Resisting Joints to Eurocode 3'. Column flange connection is assumed.
The connection is one sided. The web panel shear cannot be discounted in the determination of the compressive force.

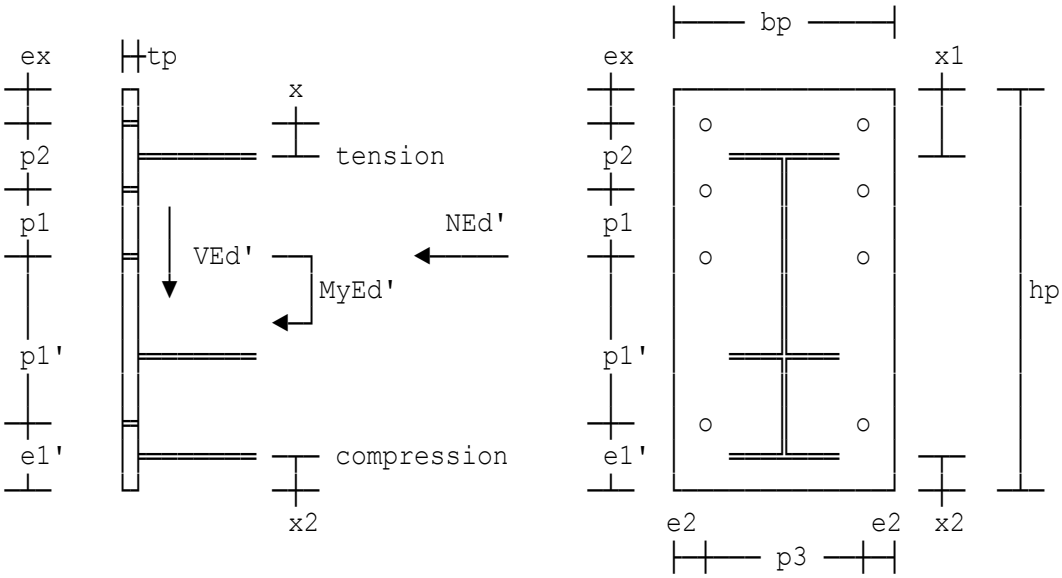

Factored moment	MyEd'=824 kNm
Factored shear force	VEd'=354 kN
Axial force (+ve compression)	NEd'=121 kN

Supporting column details

610 x 229 x 101 UKB

Supported rafter section properties - parent section

457 x 191 x 74 UKB

Section properties - haunch cutting

533 x 210 x 82 UKB

Combined properties & restrictions

Pitch of rafter (in degrees)	Theta=10
Vertical overall depth	ho=950 mm
Haunch angle to end plate	phi'=78°

Bolt details

Diameter of bolts	db=24 mm
Tensile resistance (EC3 Part 1-8)	FtRd=k2*fub*At/(gamM2*10^3)=203.33 kN

End plate details

Thickness of plate	tp=20 mm
Total number of bolts	bn=14
Number of shear bolts	ns=4
Distance to first row of bolts	ex=50 mm
Distance to beam flange	x=40 mm
Pitch to second row of bolts	p2=100 mm
Pitch of tension bolts	p1=90 mm
Edge distance for shear bolts	e1'=130 mm
Over-all length of end plate	hp=1085 mm
Bolt cross-centres	p3=90 mm
Width of end plate	bp=200 mm
Assumed web fillet weld size	sww=8 mm
Assumed flange fillet weld size	swf=12 mm

SUMMARY OF BOLT POTENTIAL RESISTANCES

Top row of bolts	Pr1=303.41 kN
Row 2	Pr2=286.12 kN
Row 3	Pr3=213.27 kN
Row 4	Pr4=183.21 kN
Row 5	Pr5=183.21 kN
Design axial load on column	NEdc=500 kN
Resistance of beam flange	FcRdf=1016 kN
Weld size (leg length)	ss=8 mm

As MyEd > McRd (738 kNm > 736.97 kNm), the applied moment exceeds the moment resistance. Tension stiffeners are required.

Stiffener width	bsgt=100 mm
Proposed rib stiffener thickness	tsr=20 mm
Proposed weld size	ssr=15 mm
Selected fillet weld size	swt=12
Selected fillet weld size	sfw=8 mm

REVERSED MOMENT CONDITION

Factored moment	MrEd=385 kNm
Factored shear force	VrEd=178 kN
Axial force (+ve compression)	NrEd=-56 kN

CONNECTION SUMMARY - all dimensions in diagram are in mm

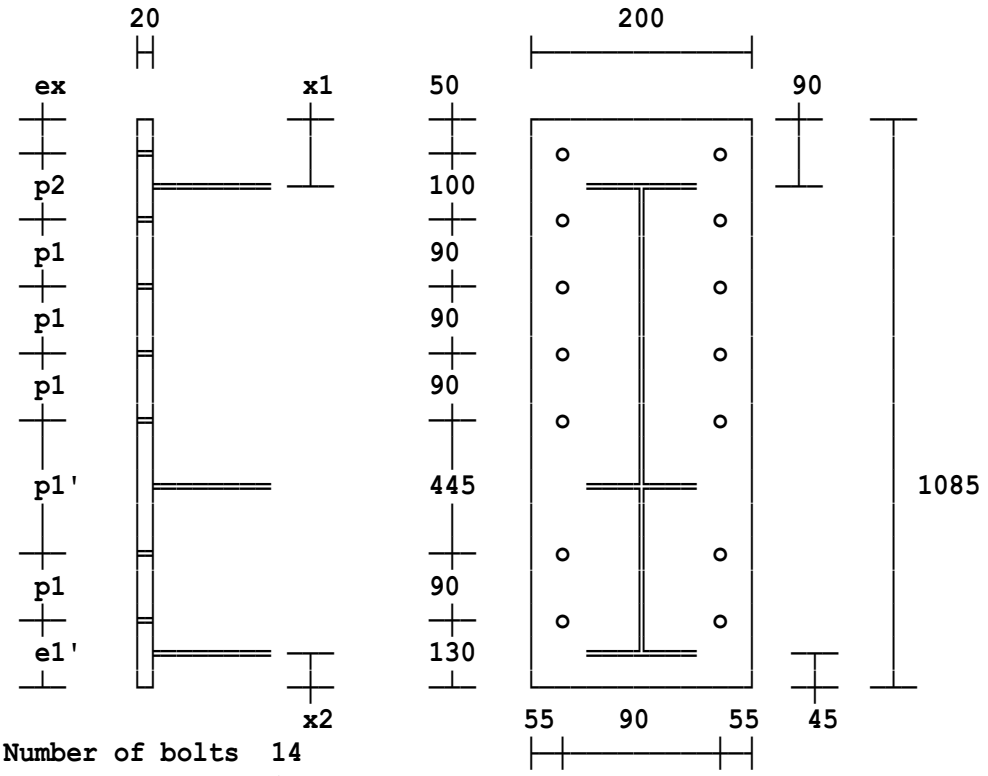

Number of bolts 14
Bolt diameter 24 mm
Bolt grade 8.8

Welds	**Tension flange fillet weld**	**12 mm**
	Web fillet weld	**8 mm**
	Compression flange fillet weld	**8 mm**

Supporting column section 610 x 229 x 101 UKB
Beam / Rafter section 457 x 191 x 74 UKB
Haunch section 533 x 210 x 82 UKB

Column stiffener details

Compression stiffeners 2/90 mm x 30 mm Grade S 275 connected by 4/8 mm fillet welds.

Tension stiffeners Full depth 20 mm thick.
2/100 mm wide placed midway between the following bolt rows:
1 and 2
2 and 3
3 and 4
4 and 5

Location: Ex2- One sided connection with compression stiffener

Bolted extended end plate eaves connection - beam to column

Calculations are in accordance with EC3 Parts 1-1, 1-5, 1-8 and follow the procedure given in the SCI publication P398 entitled 'Joints in Steel Construction Moment-Resisting Joints to Eurocode 3'. Column flange connection is assumed.
The connection is one sided. The web panel shear cannot be discounted in the determination of the compressive force.

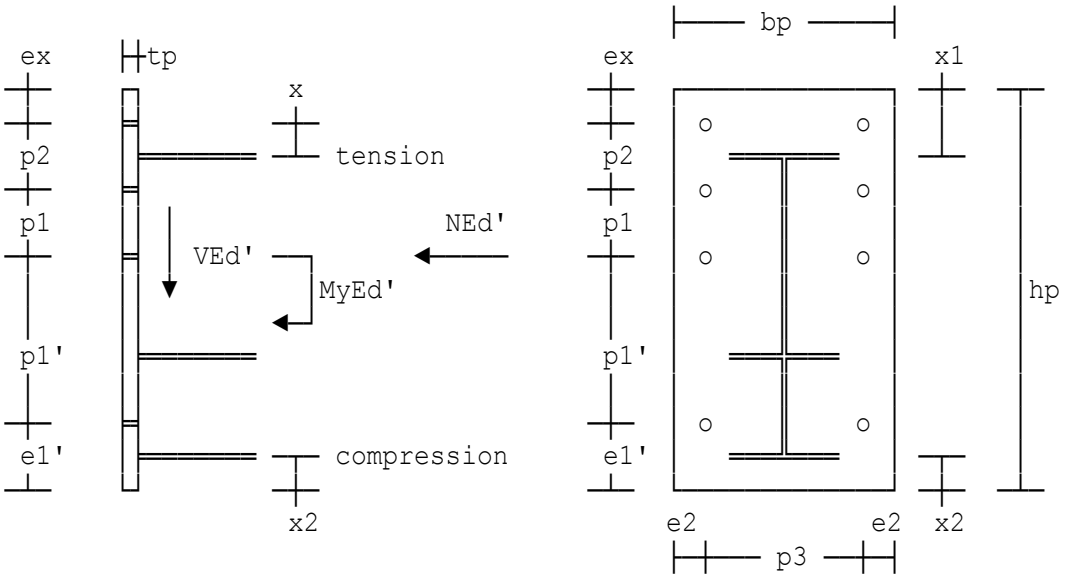

Factored moment	MyEd'=134 kNm
Factored shear force	VEd'=56 kN
Axial force (+ve compression)	NEd'=27 kN

Supporting column details

406 x 178 x 54 UKB

Supported rafter section properties - parent section

254 x 146 x 37 UKB

Section properties - haunch cutting

305 x 165 x 46 UKB

Combined properties & restrictions

Pitch of rafter (in degrees)	Theta=8
Vertical overall depth	ho=450 mm
Haunch angle to end plate	phi'=65°

Bolt details

Diameter of bolts	db=24 mm
Tensile resistance (EC3 Part 1-8)	FtRd=k2*fub*At/(gamM2*10^3)=203.33 kN

End plate details

Thickness of plate	tp=20 mm
Total number of bolts	bn=8
Number of shear bolts	ns=4
Distance to first row of bolts	ex=50 mm
Distance to beam flange	x=40 mm
Pitch to second row of bolts	p2=100 mm
Pitch of shear bolts	p1=90 mm
Distance tension to shear bolts	p1'=220 mm
Edge distance for shear bolts	e1'=130 mm
Bolt cross-centres	p3=90 mm
Width of end plate	bp=180 mm
Assumed web fillet weld size	sww=8 mm
Assumed flange fillet weld size	swf=8 mm

SUMMARY OF BOLT POTENTIAL RESISTANCES

Top row of bolts	Pr1=184.98 kN
Row 2	Pr2=99.038 kN
Design axial load on column	NEdc=500 kN
Resistance of beam flange	FcRdf=752 kN
Weld size (leg length)	ss=8 mm
Selected fillet weld size	swt=8
Selected fillet weld size	sfw=8 mm

REVERSED MOMENT CONDITION

Factored moment	MrEd=68 kNm
Factored shear force	VrEd=37 kN
Axial force (+ve compression)	NrEd=-34 kN

CONNECTION SUMMARY - all dimensions in diagram are in mm

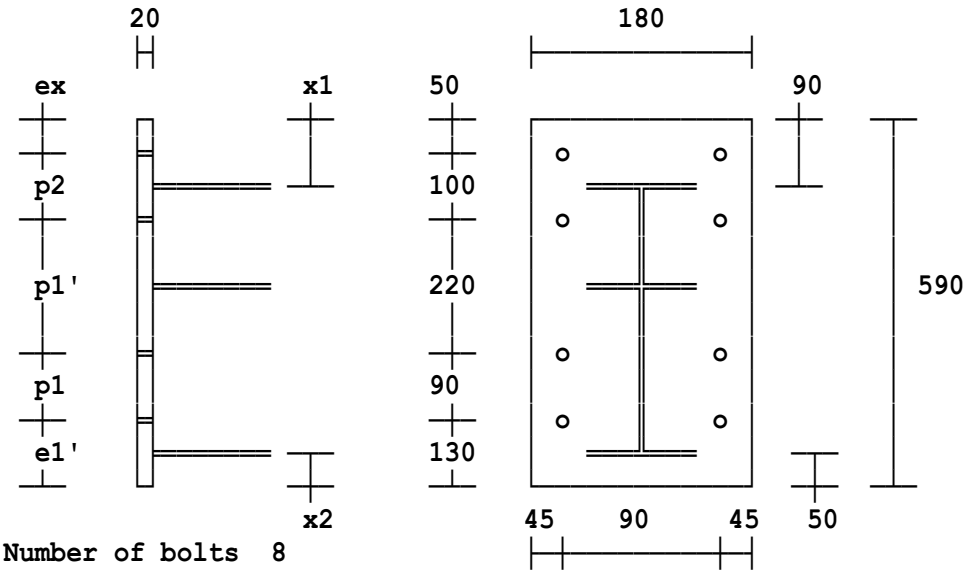

Number of bolts 8
Bolt diameter 24 mm
Bolt grade 8.8

Welds	**Tension flange fillet weld**	**8 mm**
	Web fillet weld	**8 mm**
	Compression flange fillet weld	**8 mm**

Supporting column section 406 x 178 x 54 UKB
Beam / Rafter section 254 x 146 x 37 UKB
Haunch section 305 x 165 x 46 UKB

Column stiffener details

Compression stiffeners 2/80 mm x 10 mm Grade S 275
connected by 4/8 mm fillet welds.

Location: Ex3 - Double sided connection with compression stiffener

Bolted extended end plate eaves connection - beam to column

Calculations are in accordance with EC3 Parts 1-1, 1-5, 1-8 and follow the procedure given in the SCI publication P398 entitled 'Joints in Steel Construction Moment-Resisting Joints to Eurocode 3'. Column flange connection is assumed.
Beams are connected to both column flanges. The web panel shear can be discounted in the determination of the compressive force as the connection is assumed to have balanced moments.

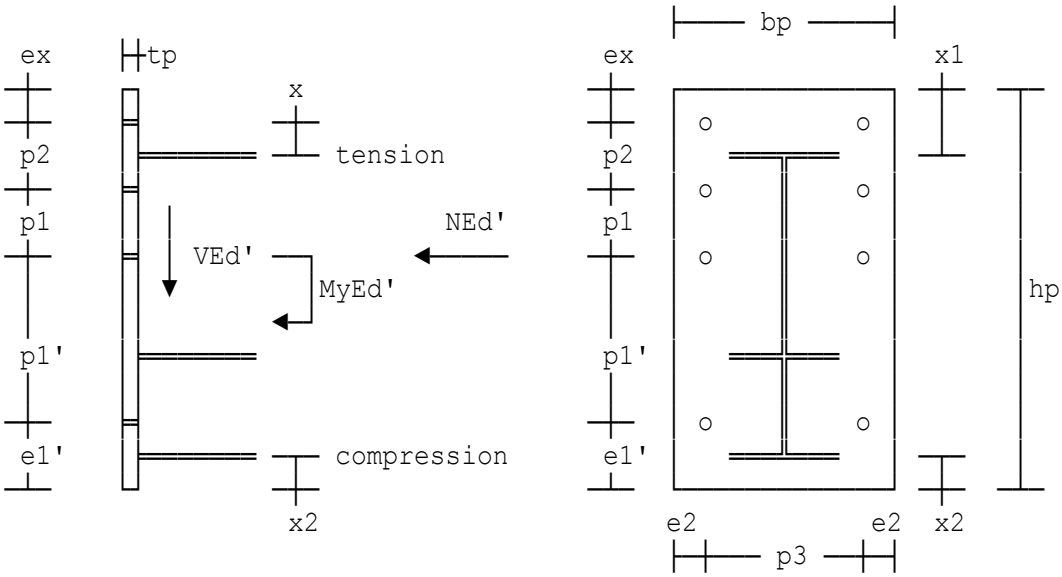

Factored moment	MyEd'=328 kNm
Factored shear force	VEd'=360 kN
Axial force (+ve compression)	NEd'=-34 kN

Supporting column details

254 x 254 x 89 UKC

Supported rafter section properties - parent section

356 x 127 x 33 UKB

Section properties - haunch cutting

406 x 140 x 39 UKB

Combined properties & restrictions

Pitch of rafter (in degrees)	Theta=0
Vertical overall depth	ho=710 mm
Haunch angle to end plate	phi'=50°

Bolt details

Diameter of bolts	db=24 mm
Tensile resistance (EC3 Part 1-8)	FtRd=k2*fub*At/(gamM2*10^3)=203.33 kN

End plate details

Thickness of plate	tp=20 mm
Total number of bolts	bn=14
Number of shear bolts	ns=6
Distance to first row of bolts	ex=50 mm
Distance to beam flange	x=40 mm
Pitch to second row of bolts	p2=100 mm
Pitch of tension bolts	p1=90 mm
Distance tension to shear bolts	p1'=200 mm
Edge distance for shear bolts	e1'=130 mm
Bolt cross-centres	p3=90 mm
Width of end plate	bp=200 mm
Assumed web fillet weld size	sww=8 mm
Assumed flange fillet weld size	swf=12 mm

SUMMARY OF BOLT POTENTIAL RESISTANCES

Top row of bolts	Pr1=303.41 kN
Row 2	Pr2=336.66 kN
Row 3	Pr3=256.91 kN
Row 4	Pr4=148.5 kN
Design axial load on column	NEdc=500 kN
Resistance of beam flange	FcRdf=469 kN
Weld size (leg length)	ss=8 mm
Selected fillet weld size	swt=8 mm
Selected fillet weld size	sfw=10 mm

CONNECTION SUMMARY - all dimensions in diagram are in mm

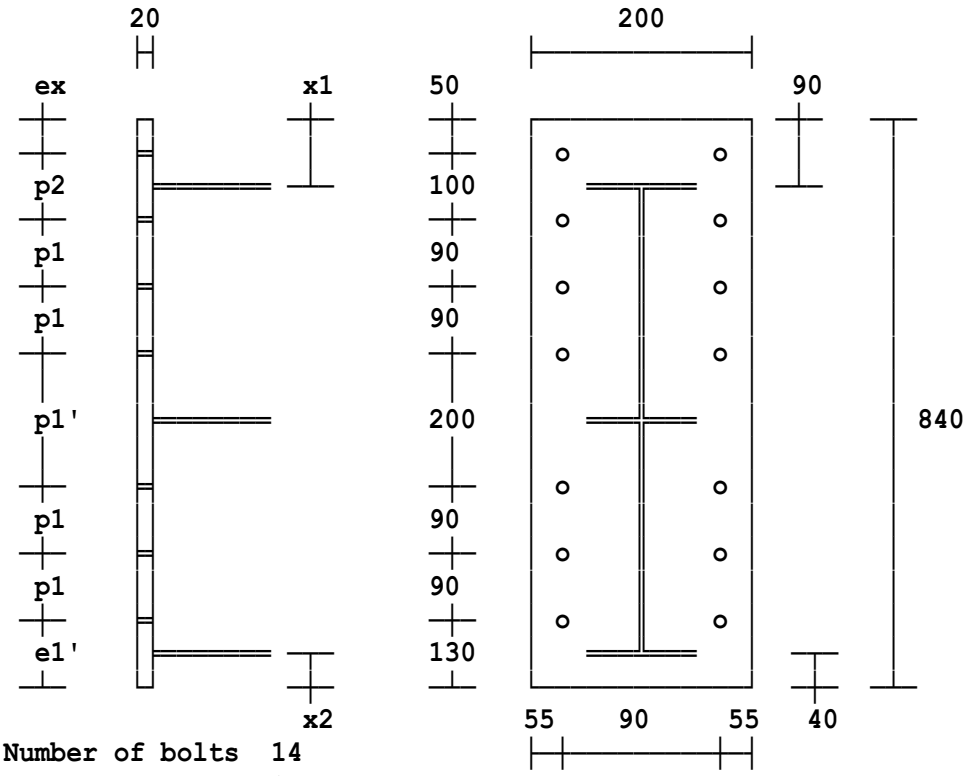

Number of bolts 14
Bolt diameter 24 mm
Bolt grade Preloaded HSFG bolts
General grade (8.8) with grade 10 nuts.
Welds Tension flange fillet weld 8 mm
Web fillet weld 10 mm
Compression flange fillet weld 10 mm
Supporting column section 254 x 254 x 89 UKC
Beam / Rafter section 356 x 127 x 33 UKB
Haunch section 406 x 140 x 39 UKB

Column stiffener details

Compression stiffeners 2/90 mm x 20 mm Grade S 275
connected by 4/8 mm fillet welds.

Location: Ex4 - Connection with compression & tension stiffeners

Bolted extended end plate eaves connection - beam to column

Calculations are in accordance with EC3 Parts 1-1, 1-5, 1-8 and follow the procedure given in the SCI publication P398 entitled 'Joints in Steel Construction Moment-Resisting Joints to Eurocode 3'. Column flange connection is assumed.
The connection is one sided. The web panel shear cannot be discounted in the determination of the compressive force.

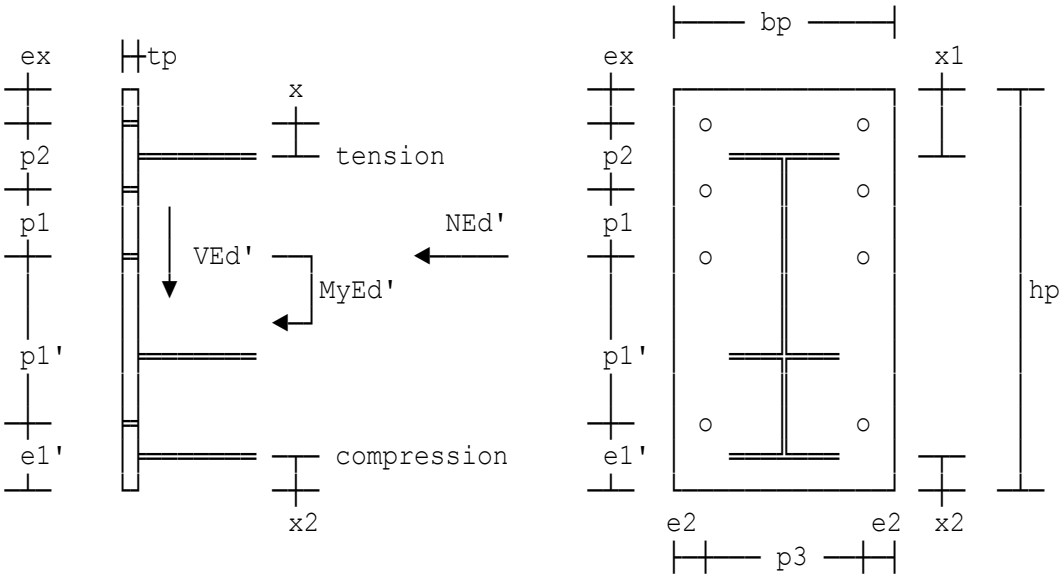

Factored moment	MyEd'=835 kNm
Factored shear force	VEd'=354 kN
Axial force (+ve compression)	NEd'=121 kN

Supporting column details

610 x 229 x 101 UKB

Supported rafter section properties - parent section

457 x 191 x 74 UKB

Section properties - haunch cutting

533 x 210 x 82 UKB

Combined properties & restrictions

Pitch of rafter (in degrees)	Theta=10
Vertical overall depth	ho=950 mm
Haunch angle to end plate	phi'=78°

Bolt details

Diameter of bolts	db=24 mm
Tensile resistance (EC3 Part 1-8)	FtRd=k2*fub*At/(gamM2*10^3)=203.33 kN

End plate details

Thickness of plate	tp=20 mm
Total number of bolts	bn=14
Number of shear bolts	ns=4
Distance to first row of bolts	ex=50 mm
Distance to beam flange	x=40 mm
Pitch to second row of bolts	p2=100 mm
Pitch of tension bolts	p1=90 mm
Edge distance for shear bolts	e1'=130 mm
Over-all length of end plate	hp=1085 mm
Bolt cross-centres	p3=90 mm
Width of end plate	bp=200 mm
Assumed web fillet weld size	sww=8 mm
Assumed flange fillet weld size	swf=12 mm

SUMMARY OF BOLT POTENTIAL RESISTANCES

Top row of bolts	Pr1=303.41 kN
Row 2	Pr2=286.12 kN
Row 3	Pr3=213.27 kN
Row 4	Pr4=183.21 kN
Row 5	Pr5=183.21 kN
Design axial load on column	NEdc=500 kN
Resistance of beam flange	FcRdf=1016 kN
Weld size (leg length)	ss=8 mm

As MyEd > McRd (749 kNm > 736.97 kNm), the applied moment exceeds the moment resistance. Tension stiffeners are required.

Stiffener width	bsgt=100 mm
Proposed rib stiffener thickness	tsr=20 mm
Proposed weld size	ssr=15 mm
Selected fillet weld size	swt=15 mm
Selected fillet weld size	sfw=8 mm

REVERSED MOMENT CONDITION

Factored moment	MrEd=385 kNm
Factored shear force	VrEd=178 kN
Axial force (+ve compression)	NrEd=-56 kN

CONNECTION SUMMARY - all dimensions in diagram are in mm

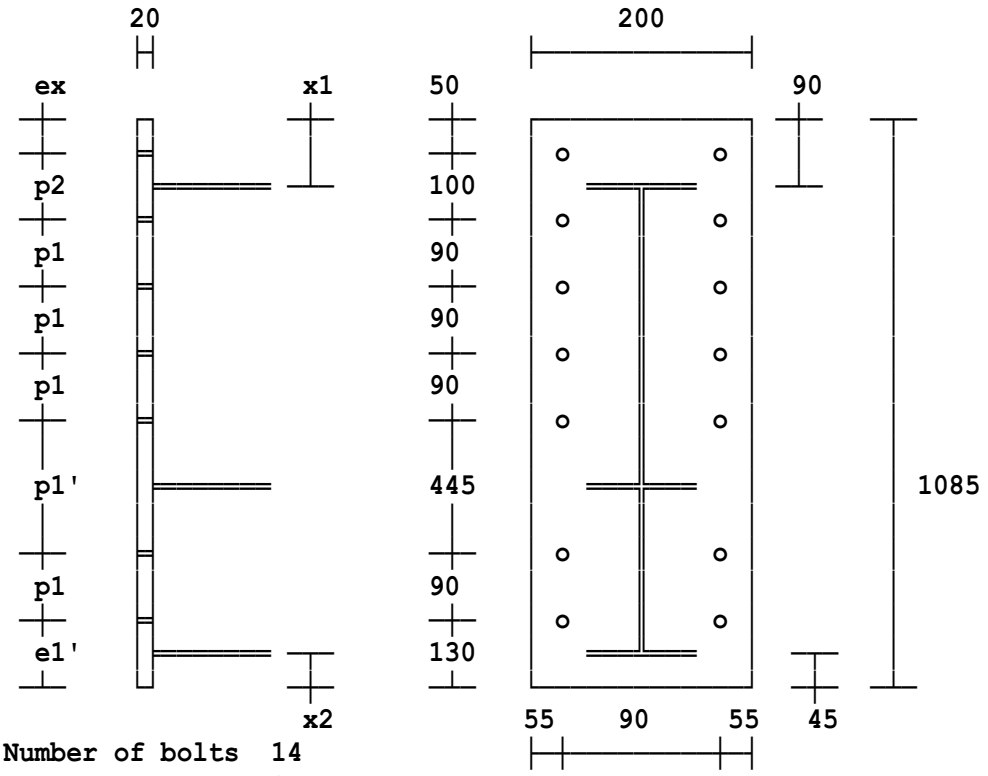

Number of bolts 14
Bolt diameter 24 mm
Bolt grade 8.8

Welds	**Tension flange fillet weld**	**15 mm**
	Web fillet weld	**8 mm**
	Compression flange fillet weld	**8 mm**

Supporting column section 610 x 229 x 101 UKB
Beam / Rafter section 457 x 191 x 74 UKB
Haunch section 533 x 210 x 82 UKB

Column stiffener details

Compression stiffeners 2/90 mm x 30 mm Grade S 275 connected by 4/8 mm fillet welds.

Tension stiffeners Full depth 20 mm thick.
2/100 mm wide placed midway between the following bolt rows:
1 and 2
2 and 3
3 and 4
4 and 5

Location: Ex5 - Connection with shear and compression stiffeners

Bolted extended end plate eaves connection - beam to column

Calculations are in accordance with EC3 Parts 1-1, 1-5, 1-8 and follow the procedure given in the SCI publication P398 entitled 'Joints in Steel Construction Moment-Resisting Joints to Eurocode 3'. Column flange connection is assumed.
The connection is one sided. The web panel shear cannot be discounted in the determination of the compressive force.

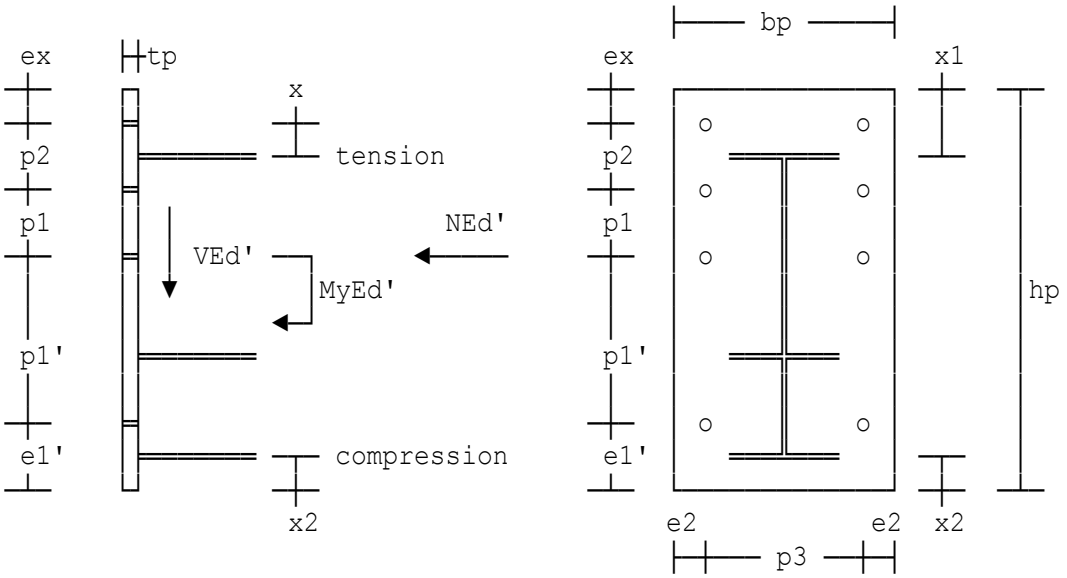

Factored moment	MyEd'=950 kNm
Factored shear force	VEd'=300 kN
Axial force (+ve compression)	NEd'=75 kN

Supporting column details

610 x 229 x 101 UKB

Supported rafter section properties - parent section

457 x 191 x 74 UKB

Section properties - haunch cutting

533 x 210 x 82 UKB

Combined properties & restrictions

Pitch of rafter (in degrees)	Theta=10
Vertical overall depth	ho=960 mm
Haunch angle to end plate	phi'=78°

Bolt details

Diameter of bolts	db=30 mm
Tensile resistance (EC3 Part 1-8)	FtRd=k2*fub*At/(gamM2*10^3)=323.14 kN

End plate details

Thickness of plate	tp=15 mm
Total number of bolts	bn=12
Number of shear bolts	ns=2
Distance to first row of bolts	ex=60 mm
Distance to beam flange	x=30 mm
Pitch to second row of bolts	p2=90 mm
Pitch of tension bolts	p1=90 mm
Edge distance for shear bolts	e1'=110 mm
Over-all length of end plate	hp=1090 mm
Bolt cross-centres	p3=90 mm
Width of end plate	bp=200 mm
Assumed web fillet weld size	sww=8 mm
Assumed flange fillet weld size	swf=12 mm

SUMMARY OF BOLT POTENTIAL RESISTANCES

Top row of bolts	Pr1=303.31 kN
Row 2	Pr2=295.92 kN
Row 3	Pr3=183.21 kN
Row 4	Pr4=183.21 kN
Row 5	Pr5=183.21 kN
Design axial load on column	NEdc=500 kN
Resistance of beam flange	FcRdf=1016 kN
Weld size	sc=8 mm
Weld size (leg length)	ss=8 mm
Selected fillet weld size	swt=15 mm
Selected fillet weld size	sfw=8 mm

CONNECTION SUMMARY - all dimensions in diagram are in mm

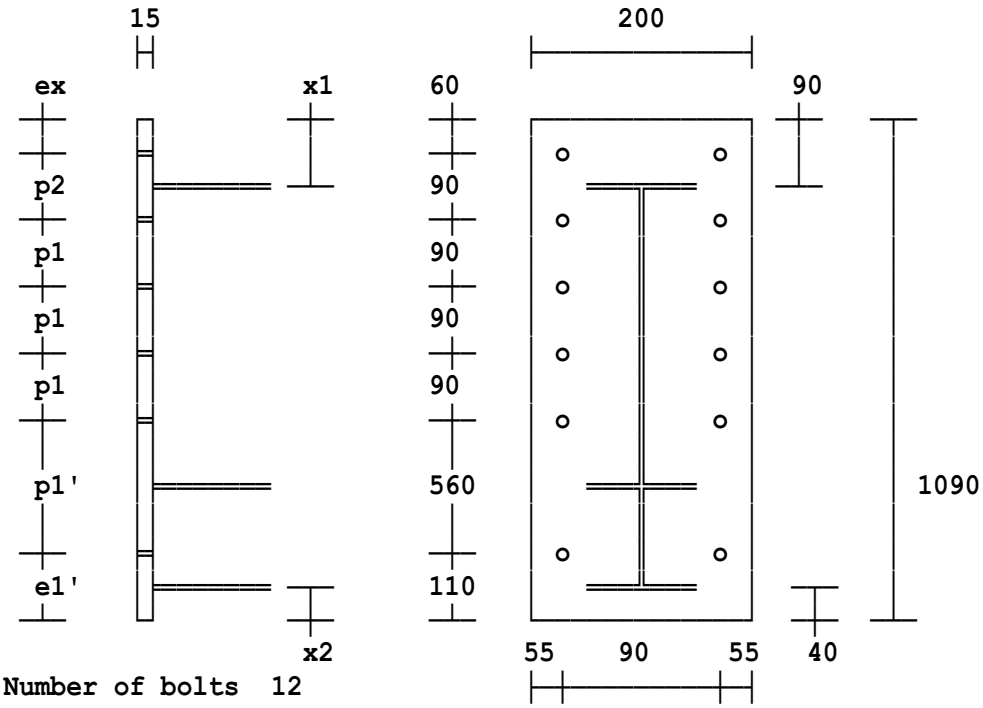

Number of bolts 12
Bolt diameter 30 mm
Bolt grade 8.8
Welds Tension flange fillet weld 15 mm
Web fillet weld 8 mm
Compression flange fillet weld 8 mm
Supporting column section 610 x 229 x 101 UKB
Beam / Rafter section 457 x 191 x 74 UKB
Haunch section 533 x 210 x 82 UKB

Column stiffener details

Diagonal shear stiffeners 2/100 mm x 15 mm Grade S 275 on line between the beam tension and compression surfaces connected by 4/8 mm fillet welds.
Compression stiffeners 2/100 mm x 20 mm Grade S 275 connected by 4/8 mm fillet welds.

Location: Example 8 - Baseplate 1

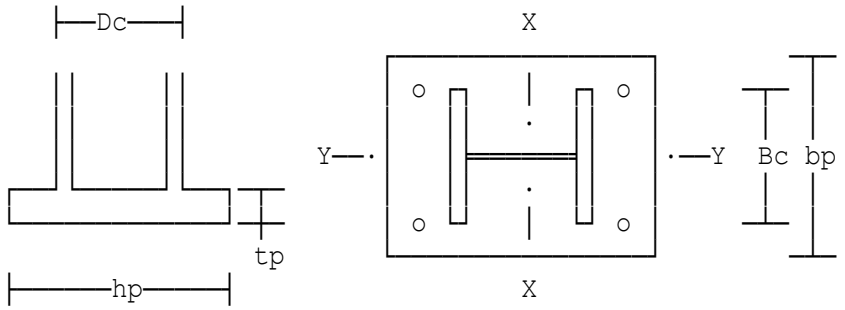

Loads are factored.

ELEVATION PLAN

Axial compressive load	N=1500 kN
Shear on the base in Y direction	Fy=40 kN
254 x 254 x 73 UKC	
Length of baseplate	hp=500 mm
Breadth of baseplate	bp=500 mm
Edge distance to bolt centre line	k=50 mm
Assumed fillet weld size	sw=8 mm
Bolt grade (4.6 or 8.8)	bgrade=4.6
Compressive strength of concrete	gradec=30 N/mm²
Selected baseplate thickness	tp=20 mm
Number of bolts to be used	n=4
Bolt diameter	bd=20 mm

Column to baseplate welds

Compression flange welds

Surfaces of baseplate and end of column are machined square to comply with Clause 4.13.3 to give bearing contact, nominal welds only are required. Only a nominal weld size need be specified.

Selected fillet weld size scw=8 mm

Web welds

Web welds are assumed to carry the shear force.

Weld size required sww=Fyw/(0.7*pw)=0.64838 mm

Selected fillet weld size sfw=8 mm

SUMMARY OF BASEPLATE REQUIREMENTS	**Size 500 mm x 20 mm x 500 mm**	
	Grade S 275 steel	
	Edge distance	**50 mm**
	Number of H.D. bolts	**4**
	Diameter of bolts	**M 20**
	Grade 4.6	
	Concrete and Grout:	
	Compressive strength	**30 N/mm²**
	Web weld	**8 mm**

Contact areas on the baseplate and column are machined to give a tight bearing contact.

Location: Example 9 - Baseplate 2

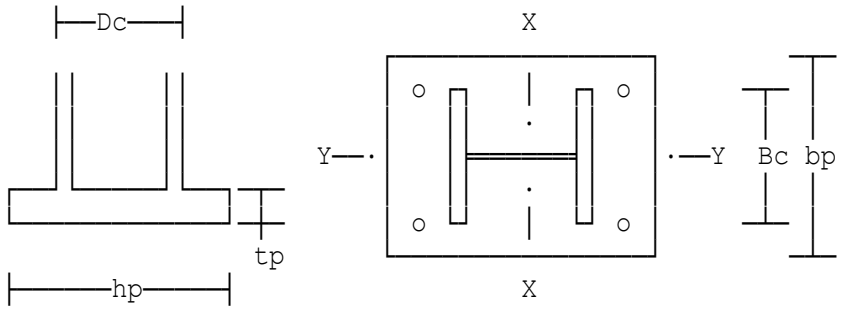

Loads are factored.

ELEVATION PLAN

Axial compressive load	N=3400 kN
Shear on the base in Y direction	Fy=40 kN
254 x 254 x 107 UKC	
Length of baseplate	hp=600 mm
Breadth of baseplate	bp=600 mm
Edge distance to bolt centre line	k=50 mm
Assumed fillet weld size	sw=8 mm
Bolt grade (4.6 or 8.8)	bgrade=4.6
Compressive strength of concrete	gradec=20 N/mm²
Selected baseplate thickness	tp=50 mm
Number of bolts to be used	n=4
Bolt diameter	bd=20 mm

Column to baseplate welds

Compression flange welds

Surfaces of baseplate and end of column are machined square to comply with Clause 4.13.3 to give bearing contact, nominal welds only are required. Only a nominal weld size need be specified.

Selected fillet weld size	scw=8 mm

Web welds

Web welds are assumed to carry the shear force.

Weld size required	sww=Fyw/(0.7*pw)=0.64838 mm
Selected fillet weld size	sfw=8 mm

SUMMARY OF BASEPLATE REQUIREMENTS	**Size 600 mm x 50 mm x 600 mm**	
	Grade S 275 steel	
	Edge distance	**50 mm**
	Number of H.D. bolts	**4**
	Diameter of bolts	**M 20**
	Grade 4.6	
	Concrete and Grout:	
	Compressive strength	**20 N/mm²**
	Web weld	**8 mm**

Contact areas on the baseplate and column are machined to give a tight bearing contact.

Location: SCI Example 19

Calculations are also in accordance with EC3 Part 1-1, 1-5 and 1-8.

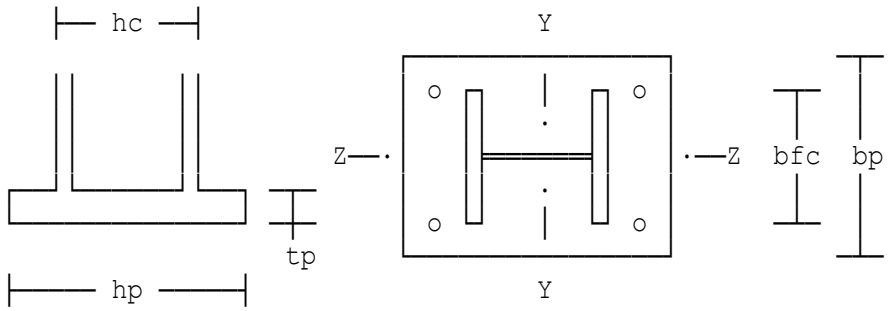

Loads are factored.

ELEVATION PLAN ON BASEPLATE

Design axial compressive load	NjEd=2635 kN
Accompanying shear force	VcEd=100 kN
305 x 305 x 137 UKC	
Length of baseplate	hp=600 mm
Breadth of baseplate	bp=600 mm
Edge distance to bolt centre line	k=60 mm
Assumed fillet weld size	sw=8 mm
Char cylinder compress strength	fck=25 N/mm²
Number of bolts to be used	n=4
Bolt diameter	bd=20 mm
Length of web weld provided	lwv=100 mm

SUMMARY OF BASEPLATE REQUIREMENTS	**Size 600 mm x 35 mm x 600 mm**	
	Grade S 275 steel	
	Edge distance	**60 mm**
	Number of H.D. bolts	**4**
	Diameter of bolts	**M 20**
	Grade of bolts	**8.8**
	Concrete and Grout:	
	Compress.strength class	**C 25 /30**
COMPRESSION	**Design axial load**	**2635 kN**
	Required thickness	**31.6 mm**
	Minimum plate thickness	**35 mm**
	Weld size	**8 mm**

NOTE: Contact areas on the baseplate and column are assumed to be machined to give a tight bearing contact.

Location: Example including uplift

Calculations are also in accordance with EC3 Part 1-1, 1-5 and 1-8.

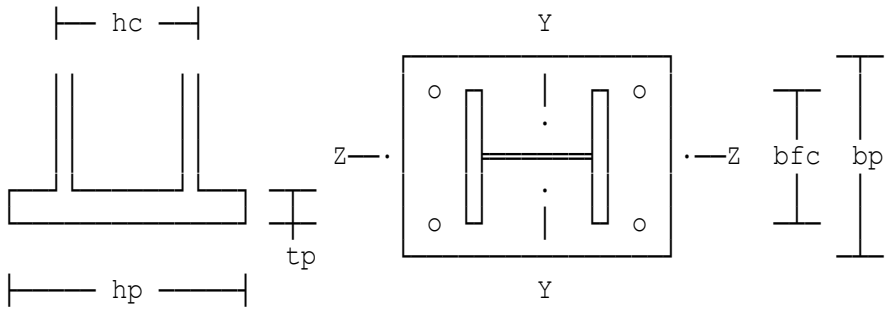

Loads are factored.

ELEVATION PLAN ON BASEPLATE

Design axial compressive load	NjEd=800 kN
Accompanying shear force	VcEd=60 kN
Design tensile force	NtEd=120 kN
Accompanying shear on the base	VtEd=40 kN

406 x 140 x 53 UKB

Length of baseplate	hp=620 mm
Breadth of baseplate	bp=300 mm
Edge distance to bolt centre line	k=60 mm

Assumed fillet weld size	sw=8 mm
Char cylinder compress strength	fck=25 N/mm²
Total number of bolts to be used	n=4
Assumed diameter of bolt	bd=24 mm
Overall embedded depth	l=400 mm
Assumed cover to reinforcement	cv=50 mm
Length of web weld provided	lwv=150 mm

SUMMARY OF	**Size 620 mm x 20 mm x 300 mm**	
BASEPLATE	**Grade S 275 steel**	
REQUIREMENTS	**Edge distance**	**60 mm**
	Number of H.D. bolts	**4**
	Diameter of bolts	**M 24**
	Grade of bolts	**8.8**
	Concrete and Grout:	
	Compress.strength class	**C 25 /30**
COMPRESSION	**Design axial load**	**800 kN**
	Required thickness	**13.2 mm**
	Minimum plate thickness	**15 mm**
TENSION	**Tensile force**	**120 kN**
	Bolt tensile resistance	**49.8 kN**
	Required thickness	**15 mm**
	Minimum plate thickness	**20 mm**
	Weld size	**8 mm**

NOTE: Contact areas on the baseplate and column are assumed to be machined to give a tight bearing contact.

Location: Overlapping stubs

Calculations are also in accordance with EC3 Part 1-1, 1-5 and 1-8.

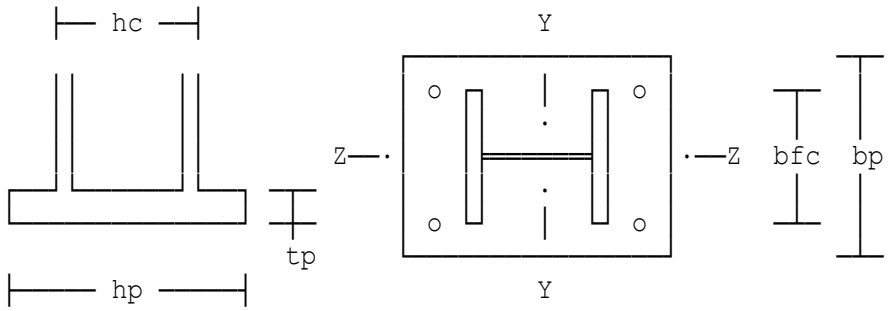

Loads are factored.

ELEVATION PLAN ON BASEPLATE

Design axial compressive load	NjEd=6000 kN
Accompanying shear force	VcEd=200 kN
305 x 305 x 158 UKC	
Length of baseplate	hp=620 mm
Breadth of baseplate	bp=620 mm
Edge distance to bolt centre line	k=60 mm
Assumed fillet weld size	sw=10 mm
Char cylinder compress strength	fck=30 N/mm²
Number of bolts to be used	n=4
Bolt diameter	bd=24 mm
Length of web weld provided	lwv=200 mm

SUMMARY OF BASEPLATE REQUIREMENTS	**Size 620 mm x 65 mm x 620 mm**	
	Grade S 275 steel	
	Edge distance	**60 mm**
	Number of H.D. bolts	**4**
	Diameter of bolts	**M 24**
	Grade of bolts	**8.8**
	Concrete and Grout:	
	Compress.strength class	**C 30 /37**
COMPRESSION	**Design axial load**	**6000 kN**
	Required thickness	**61.5 mm**
	Minimum plate thickness	**65 mm**
	Weld size	**10 mm**

NOTE: Contact areas on the baseplate and column are assumed to be machined to give a tight bearing contact.

Location: Minimal load

Calculations are also in accordance with EC3 Part 1-1, 1-5 and 1-8.

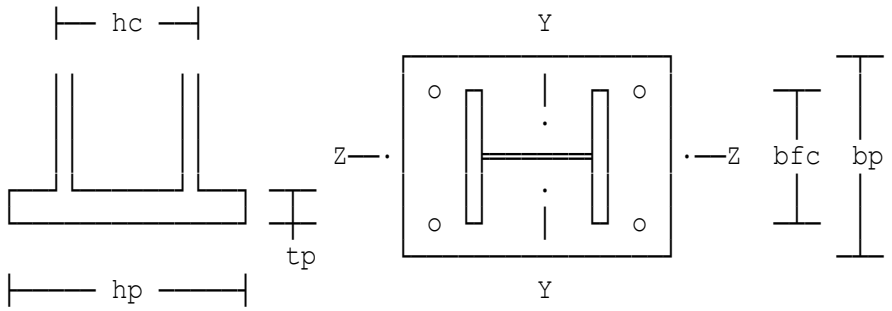

Loads are factored.

ELEVATION PLAN ON BASEPLATE

Design axial compressive load	NjEd=300 kN
Accompanying shear force	VcEd=60 kN
203 x 203 x 100 UKC	
Length of baseplate	hp=300 mm
Breadth of baseplate	bp=300 mm
Edge distance to bolt centre line	k=60 mm
Assumed fillet weld size	sw=8 mm
Char cylinder compress strength	fck=20 N/mm²
Revised base plate thickness	tp'= 24 mm
Number of bolts to be used	n=2
Bolt diameter	bd=20 mm
Length of web weld provided	lwv=100 mm

SUMMARY OF BASEPLATE REQUIREMENTS	**Size 300 mm x 24 mm x 300 mm**	
	Grade S 275 steel	
	Edge distance	**60 mm**
	Number of H.D. bolts	**2**
	Diameter of bolts	**M 20**
	Grade of bolts	**8.8**
	Concrete and Grout:	
	Compress.strength class	**C 20 /25**
COMPRESSION	**Design axial load**	**300 kN**
	Required thickness	**24 mm**
	Minimum plate thickness	**24 mm**
	Weld size	**8 mm**

NOTE: Contact areas on the baseplate and column are assumed to be machined to give a tight bearing contact.

Location: 300 x 300 x 10 SHS -lightly loaded

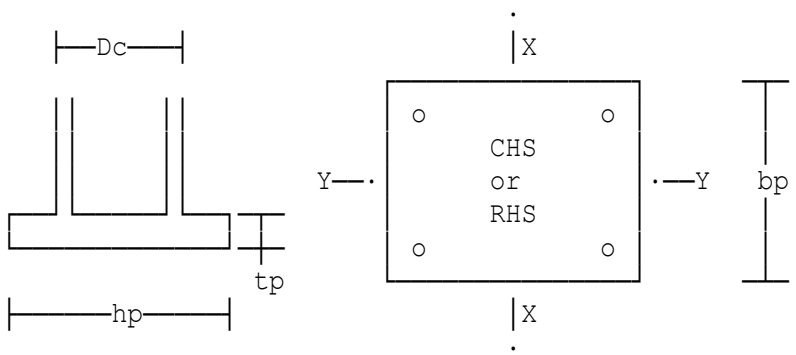

All loads are factored.

ELEVATION PLAN ON BASE PLATE

Axial compressive load N=1500 kN
Shear on the base in Y direction Fy=300 kN
300 x 300 x 10 SHS - Hot finished.
Properties (cm): A=115 rx=11.8 Zx=1070 Sx=1250 Ix=16000 J=24800 C=1580
Length of baseplate hp=500 mm
Breadth of baseplate bp=500 mm
Edge distance to bolt centre line k=60 mm

Assumed fillet weld size sw=8 mm
Compressive strength of concrete gradec=30 N/mm²
Selected baseplate thickness tp=15 mm

Number of bolts to be used n=4
Bolt diameter bd=30 mm

Column to baseplate welds

Compression flange welds

Surfaces of baseplate and end of column are machined square to comply with Clause 4.13.3 to give bearing contact, nominal welds only are required. Only a nominal weld size need be specified.
Selected fillet weld size scw=8 mm

Web welds

Web welds are assumed to carry the shear force coincide.
Weld size required sww=Fyw/(0.7*pw)=3.6075 mm
Selected fillet weld size sfw=8 mm

SUMMARY OF BASEPLATE REQUIREMENTS	**Size 500 mm x 500 mm x 15 mm**	
	Grade S 275 steel	
	Edge distance	**60 mm**
	Number of H.D. bolts	**4**
	Diameter of bolts	**M 30**
	Grade 4.6	
	Concrete and Grout:	
	Compressive strength	**30 N/mm²**
	Web weld	**8 mm**

NOTE: Contact areas on the baseplate and column are machined to give a tight bearing contact.

Location: circular section with uplift

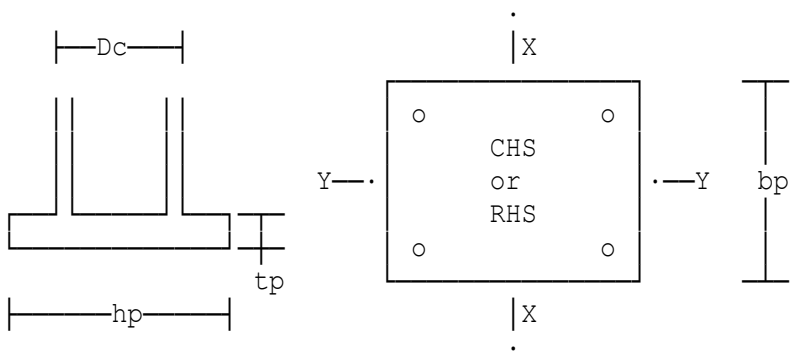

All loads are factored.

ELEVATION PLAN ON BASE PLATE

Axial compressive load	N=2500 kN
Shear on the base in Y direction	Fy=300 kN
Axial uplift force	T=850 kN
Accompanying shear on the base	Fu=149 kN

273 dia x 8 thick CHS - Hot finished.
Properties (cm): A=66.602 r=9.3734 Z=428.7 S=561.97 I=5851.7

Length of baseplate	hp=600 mm
Breadth of baseplate	bp=600 mm
Edge distance to bolt centre line	k=60 mm
Assumed fillet weld size	sw=8 mm
Compressive strength of concrete	gradec=40 N/mm²
Selected baseplate thickness	tp=35 mm
Total number of bolts to be used	n=6
Assumed diameter of bolt	bd=30 mm
Overall embedded depth	Lo=450 mm
Assumed cover to reinforcement	cv=50 mm
tension reinforcement	Asp=0.15 %

Location: Example 3 200 x 100 x 10 RHS - 900kN load

Calculations are also in accordance with EC3 Part 1-1, 1-5 and 1-8.

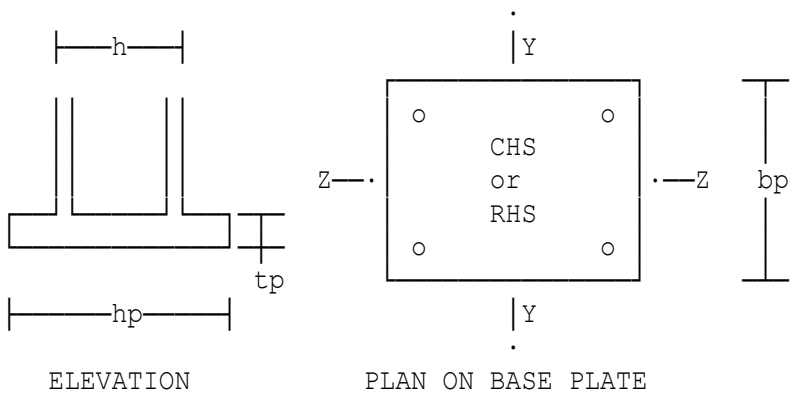

All loads are factored.

Axial compressive load NEd=900 kN
Accompanying shear force VEd=100 kN
200 x 100 x 10 RHS - Hot finished.
Properties (cm): A=54.9 iz=3.98 Wely=266 Wply=341 Iy=2660
It=2160 Wt=295 Welz=174 Wplz=206 Iz=869 iy=6.96
Length of baseplate hp=400 mm
Breadth of baseplate bp=300 mm
Edge distance to bolt centre line k=50 mm
Assumed fillet weld size s=6 mm

Char cylinder compress strength fck=30 N/mm²
Number of bolts to be used n=4
Bolt diameter bd=20 mm
Bolt grade bgrade=8.8 mm

SUMMARY OF	**Size 400 mm x 20 mm x 300 mm**	
BASEPLATE	**Grade S 355 steel**	
REQUIREMENTS	**Edge distance**	**50 mm**
	Number of H.D. bolts	**4**
	Diameter of bolts	**M 20**
	Grade of bolts	**8.8**
	Concrete and Grout:	
	Compress.strength class	**C 30 /37**
COMPRESSION	**Design axial load**	**900 kN**
	Minimum plate thickness	**20 mm**
	Weld size	**6 mm**

NOTE: Contact areas on the baseplate and column are machined to give a tight bearing contact.

Location: Example 4 - Column base CHS

Calculations are also in accordance with EC3 Part 1-1, 1-5 and 1-8.

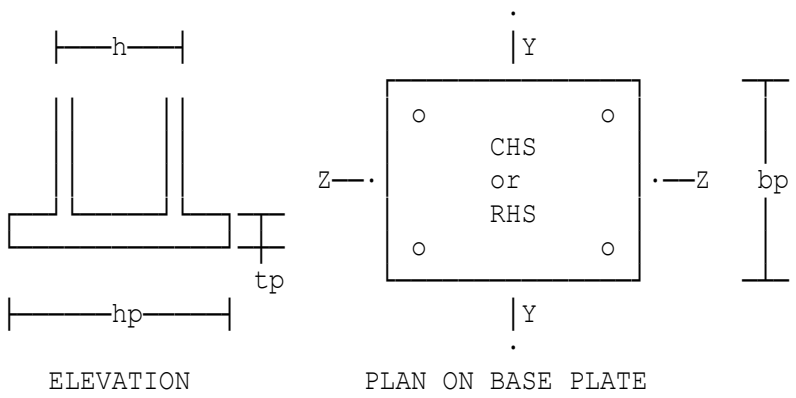

ELEVATION PLAN ON BASE PLATE

All loads are factored.

Axial compressive load NEd=1400 kN
Accompanying shear force VEd=100 kN
273 dia x 10 thick CHS - Hot finished.
Properties (cm): A=82.624 iy=9.3052 Wely=524.11 Wply=692.02 Iy=7154.1
It=14308
Length of baseplate hp=400 mm
Breadth of baseplate bp=400 mm
Edge distance to bolt centre line k=50 mm
Assumed fillet weld size s=6 mm

Char cylinder compress strength fck=30 N/mm²
Number of bolts to be used n=4
Bolt diameter bd=20 mm
Bolt grade bgrade=8.8 mm

SUMMARY OF	**Size 400 mm x 20 mm x 400 mm**	
BASEPLATE	**Grade S 355 steel**	
REQUIREMENTS	**Edge distance**	**50 mm**
	Number of H.D. bolts	**4**
	Diameter of bolts	**M 20**
	Grade of bolts	**8.8**
	Concrete and Grout:	
	Compress.strength class	**C 30 /37**
COMPRESSION	**Design axial load**	**1400 kN**
	Minimum plate thickness	**20 mm**
	Weld size	**6 mm**

NOTE: Contact areas on the baseplate and column are machined to give a tight bearing contact.

Location: Ex1 - Joints in simple construction (Ex 2)

Bolted column splice

Bearing connection

Calculations are in accordance with BS5950-1:2000 Clause 6.1.8.2.

Design assumptions:

- the column splice is about 500 mm above the floor level and hence the moment due to strut action is considered to be insignificant
- the centroidal axis of the splice is coincident with the centroidal axis of the members.

Dead	Fcd=760 kN
Imposed	Fci=870 kN
Bending moment	M=110 kNm
Shear force	Fv=60 kN
Load from floor below splice	Fst=340 kN

Upper column

254 x 254 x 73 UC.

Lower column

305 x 305 x 118 UC.

Thickness of plate adopted	tdp=25 mm
Thickness of plate	tcp=12 mm
Width of cover plate	Bcp=250 mm
Bolt diameter	bd=20 mm
Total no. of bolts in cover plate	nt=8
Pitch of bolts (vertically)	pitch=160 mm
Spacing of bolts across columns	spac=125 mm
End distance	e=40 mm
Bolt spacing (horizontally)	crs=150 mm

Thickness of packing plate (30 mm), cannot exceed 26.667 mm, see Clause 6.3.2.2. If the packs are fillet welded to the column flange this check can be omitted.

Bolt diameter	bd=20 mm

Thickness of packing plate (30 mm), cannot exceed 26.667 mm, see Clause 6.3.2.2. If the packs are fillet welded to the column flange this check can be omitted.

Bolt spacing (horizontally)	crs=150 mm
Total no. of bolts in cover plate	nt=8
Pitch of bolts (vertically)	pitch=160 mm
End distance	e=40 mm

SPLICE SUMMARY - all dimensions in diagram are in mm

Flange cover plates:

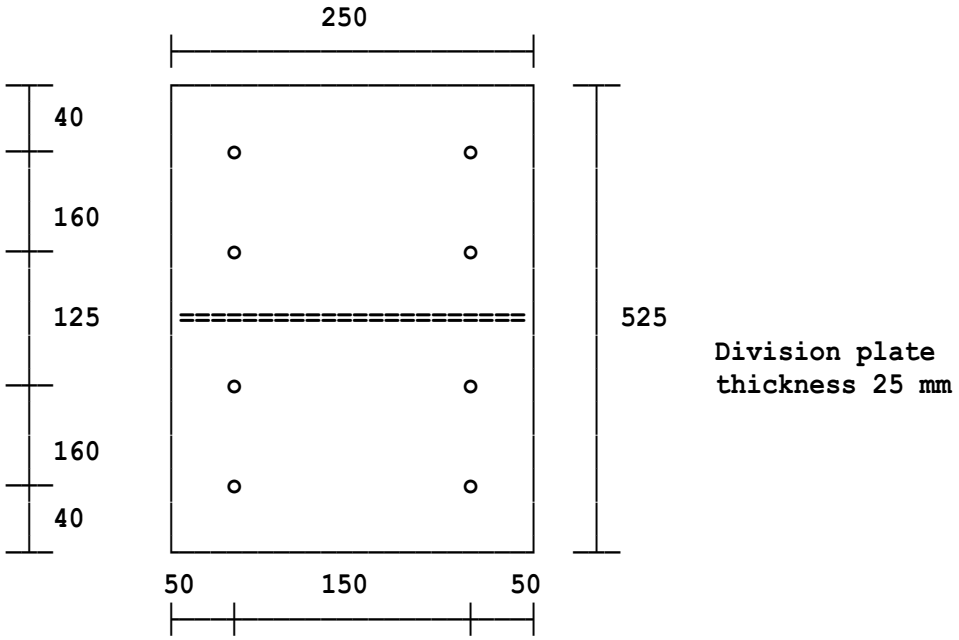

Flange cover plates	**2/ 250 mm x 12 mm x 525 mm**
Number of bolts	**4/ 4 (Total No of bolts=16)**
Packs	**2/ 250 mm x 30 mm x 250 mm**
Bolt diameter	**20 mm**
Bolt grade	**8.8**
Web angles	**Provide web angles, each with four bolts.**

Location: Ex2 - Joints in simple construction (Ex 3)

Bolted column splice

Non-bearing connection

Calculations are in accordance with BS5950-1:2000 Clause 6.1.8.2.

Design assumptions:

- the column splice is about 500 mm above the floor level and hence the moment due to strut action is considered to be insignificant
- the centroidal axis of the splice is coincident with the centroidal axis of the members.

Dead	Fcd=825 kN
Imposed	Fci=942 kN
Bending moment	M=15 kNm
Shear force	Fv=8 kN
Load from floor below splice	Fst=405 kN

Upper column

254 x 254 x 73 UC.

Lower column

305 x 305 x 118 UC.

Thickness of plate	tcp=12 mm
Width of cover plate	Bcp=250 mm
Bolt diameter	bd=24 mm
Total no. of bolts in cover plate	nt=16
Pitch of bolts (vertically)	pitch=80 mm
Spacing of bolts across columns	spac=110 mm
End distance	e=50 mm
Bolt spacing (horizontally)	crs=150 mm
Allowance for gap	gap=10 mm
Bolt diameter	bd=24 mm
Bolt spacing (horizontally)	crs=150 mm
Total no. of bolts in cover plate	nt=16
Pitch of bolts (vertically)	pitch=80 mm
End distance	e=50 mm
Thickness of plate	tcw=8 mm
Width of cover plate	Bcw=150 mm
Bolt cross-centres	crw=80 mm
Total no. of bolts in web cleat	ntw=8

SPLICE SUMMARY - all dimensions in diagram are in mm

Flange cover plates:

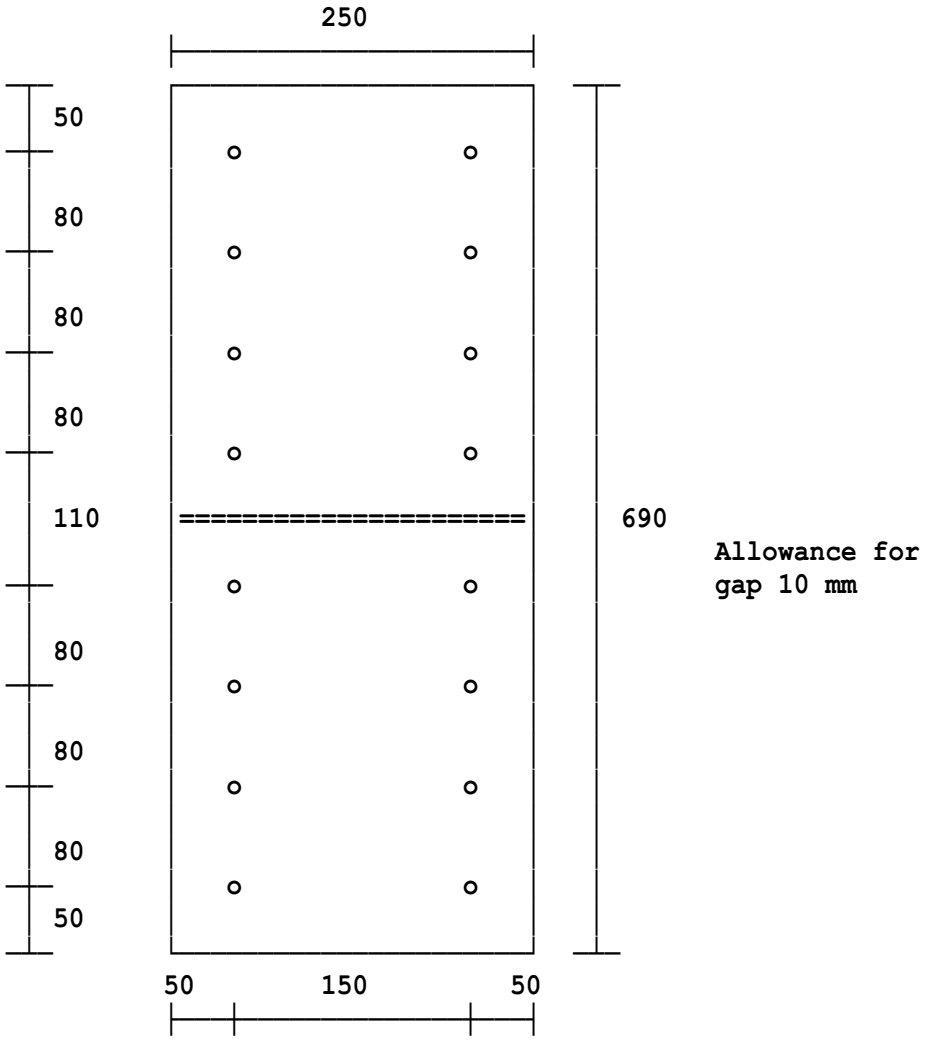

Flange cover plates	**2/**	**250 mm x 12 mm x 690 mm**
Number of bolts	**4/**	**8 (Total No of bolts=32)**
Packs	**2/**	**250 mm x 30 mm x 340 mm**
Bolt diameter	**24 mm**	
Bolt grade	**8.8**	

Web cover plates:

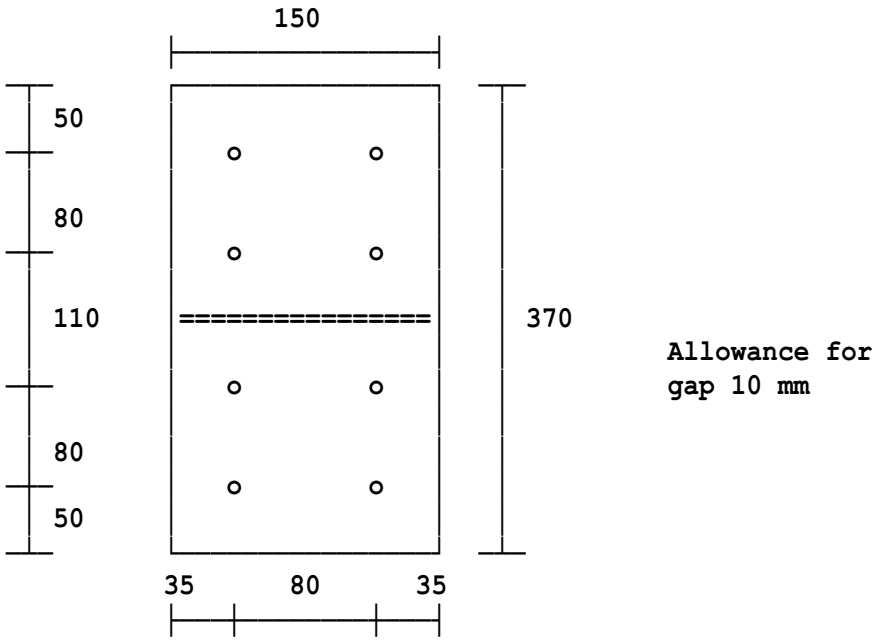

Web cover plates 2/ 150 mm x 8 mm x 370 mm
Number of bolts 2/ 4 (Total No of bolts=8)

Copyright 1986-2024 Fitzroy Systems Ltd.

Location: Ex1 - Bearing column splice

Bolted column splice

Bearing connection

Calculations are in accordance with EC3 Parts 1-1, 1-5 and 1-8.

Design assumptions:

- the column splice is about 500 mm above the floor level and hence the moment due to strut action is considered to be insignificant
- the centroidal axis of the splice is coincident with the centroidal axis of the members.

Factored loads

Permanent compressive axial load	NEdG=760 kN
Variable compressive axial load	NEdQ=870 kN
Design bending moment	MyEd=110 kNm
Design shear force	VEd=60 kN
Load from floor below splice	FstEd=340 kN

Upper column

254 x 254 x 73 UKC

Lower column

305 x 305 x 118 UKC

Division plate thickness	tdp=25 mm
Thickness of flange cover plate	tfp=12 mm
Width of flange cover plate	bfp=250 mm
Bolt diameter	db=20 mm
Total no. of bolts in cover plate	nt=8
Pitch of bolts (vertically)	p1fp=160 mm
Spacing of bolts across columns	spac=125 mm
End distance	e1fp=40 mm
Bolt spacing (horizontally)	p2fp=150 mm

As the thickness of packing plate (30 mm) exceeds 26.667 mm, the packs need to be fillet welded to the column flange.

Coefficient of friction cmu=0.2

SPLICE SUMMARY - all dimensions in diagram are in mm

Flange cover plates:

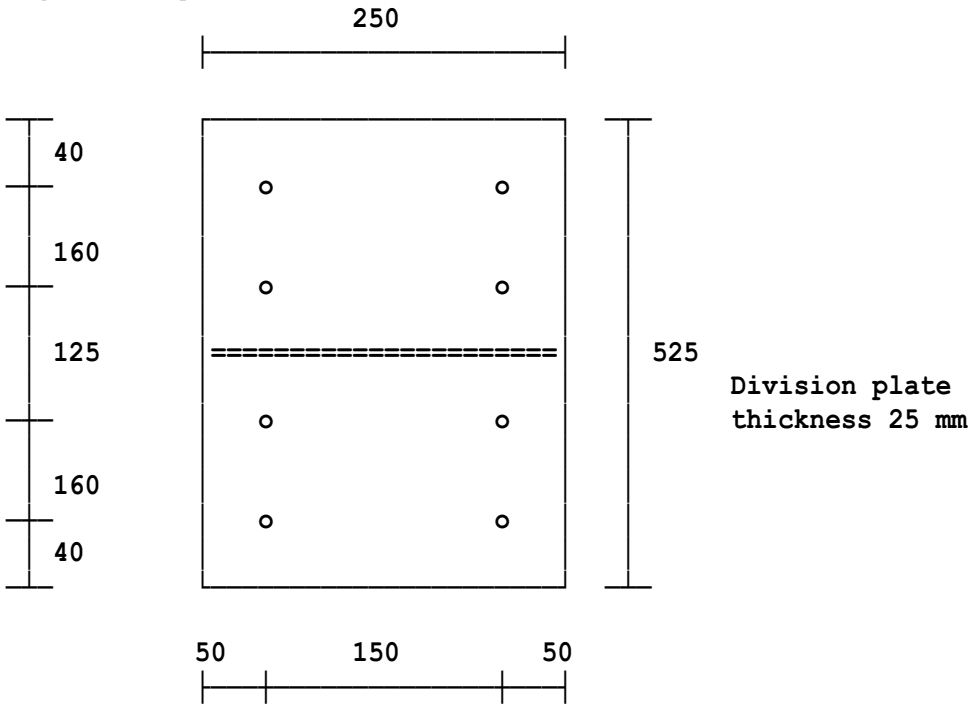

Flange cover plates	**2/**	**250 mm x 12 mm x 525 mm**
Number of bolts	**4/**	**4 (Total No of bolts=16)**
Packs	**2/**	**250 mm x 30 mm x 250 mm**
Bolt diameter	**20 mm**	
Bolt grade	**8.8**	
Web angles	**Provide web angles, each with four bolts.**	

NOTE: Packs to be fillet welded to the column flange.

Location: Ex2 - Non-bearing column splice, web/flange cover plates

Bolted column splice

Non-bearing connection

Calculations are in accordance with EC3 Parts 1-1, 1-5 and 1-8.

Design assumptions:

- the column splice is about 500 mm above the floor level and hence the moment due to strut action is considered to be insignificant
- the centroidal axis of the splice is coincident with the centroidal axis of the members.

Factored loads

Permanent compressive axial load	NEdG=825 kN
Variable compressive axial load	NEdQ=942 kN
Design bending moment	MyEd=15 kNm
Design shear force	VEd=8 kN
Load from floor below splice	FstEd=405 kN

Upper column

254 x 254 x 73 UKC

Lower column

305 x 305 x 118 UKC

Thickness of flange cover plate	tfp=12 mm
Width of flange cover plate	bfp=250 mm
Bolt diameter	db=24 mm
Total no. of bolts in cover plate	nt=16
Pitch of bolts (vertically)	p1fp=80 mm
Spacing of bolts across columns	spac=110 mm
End distance	e1fp=50 mm
Bolt spacing (horizontally)	p2fp=150 mm
Allowance for gap	gap=10 mm

Web cover plates

Thickness of web plate	twp=10 mm
Width of web cover plate	bwp=150 mm
Bolt cross-centres	p2wp=80 mm
Total no. of bolts in web cleat	ntw=8

SPLICE SUMMARY - all dimensions in diagram are in mm

Flange cover plates:

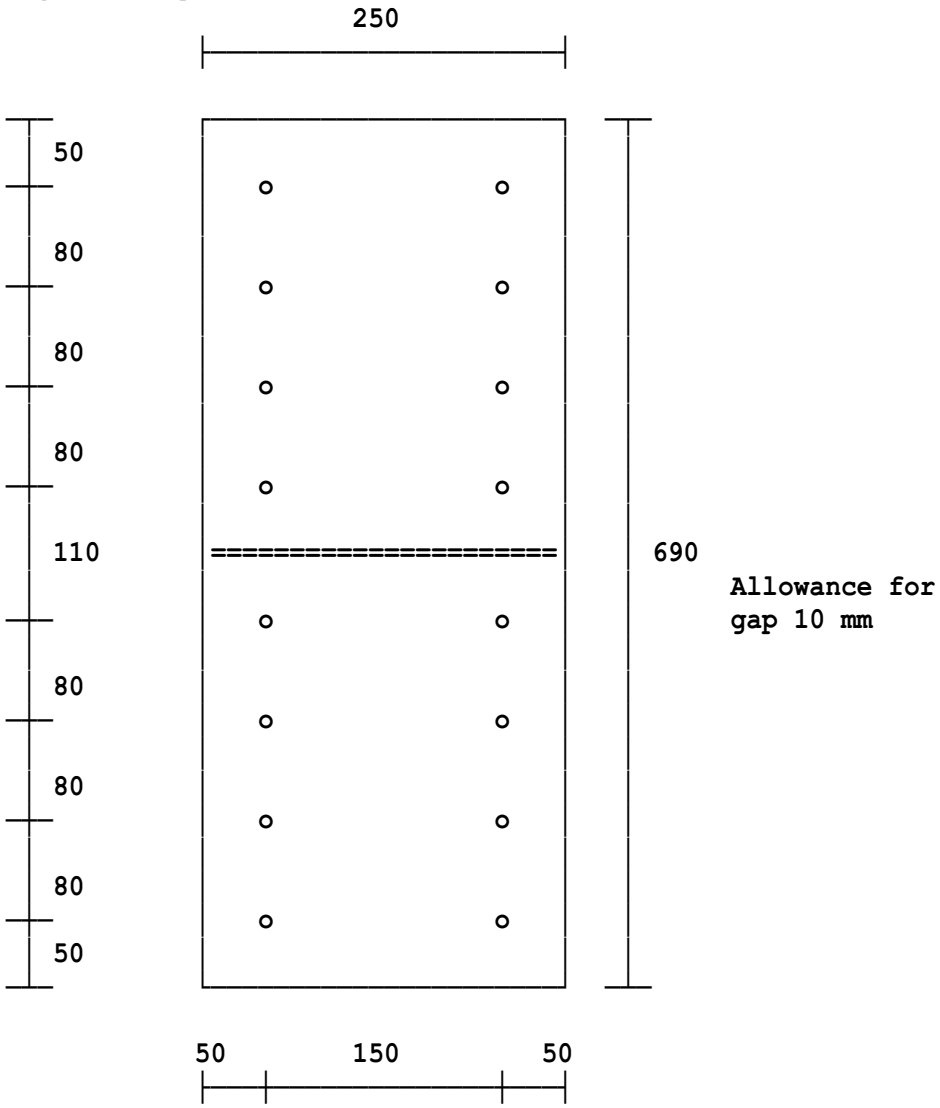

Flange cover plates	**2/**	**250 mm x 12 mm x 690 mm**
Number of bolts	**4/**	**8 (Total No of bolts=32)**
Packs	**2/**	**250 mm x 30 mm x 340 mm**
Bolt diameter	**24 mm**	
Bolt grade	**8.8**	

Web cover plates:

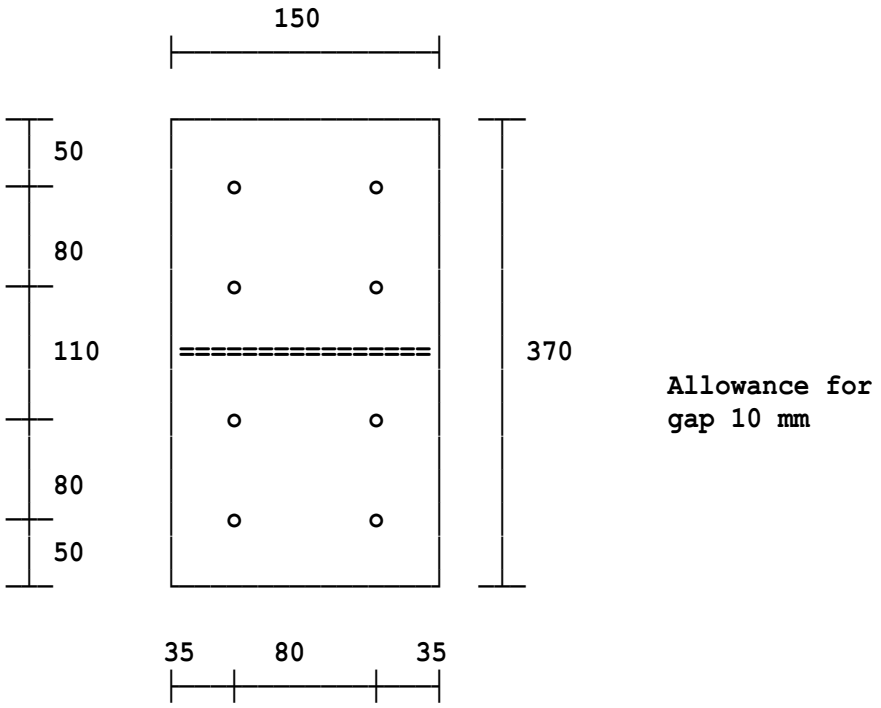

Web cover plates 2/ 150 mm x 10 mm x 370 mm
Number of bolts 2/ 4 (Total No of bolts=8)

Copyright 1986-2024 Fitzroy Systems Ltd.

Location: Ex3 - Bearing column splice with HSFG bolts

Bolted column splice

Bearing connection

Calculations are in accordance with EC3 Parts 1-1, 1-5 and 1-8.

Design assumptions:

- the column splice is about 500 mm above the floor level and hence the moment due to strut action is considered to be insignificant
- the centroidal axis of the splice is coincident with the centroidal axis of the members.

Factored loads

Permanent compressive axial load	NEdG=700 kN
Variable compressive axial load	NEdQ=1000 kN
Design bending moment	MyEd=150 kNm
Design shear force	VEd=60 kN
Load from floor below splice	FstEd=340 kN

Upper column

254 x 254 x 73 UKC

Lower column

305 x 305 x 118 UKC

Division plate thickness	tdp=25 mm
Thickness of flange cover plate	tfp=12 mm
Width of flange cover plate	bfp=250 mm
Bolt diameter	db=20 mm
Total no. of bolts in cover plate	nt=12
Pitch of bolts (vertically)	p1fp=160 mm
Spacing of bolts across columns	spac=125 mm
End distance	e1fp=40 mm
Bolt spacing (horizontally)	p2fp=150 mm

As the thickness of packing plate (30 mm) exceeds 26.667 mm, the packs need to be fillet welded to the column flange.

Slip resistance	FsRd=ks*nfs*mu*Fpc/1.25=54.88 kN
Coefficient of friction	cmu=0.2

SPLICE SUMMARY - all dimensions in diagram are in mm

Flange cover plates:

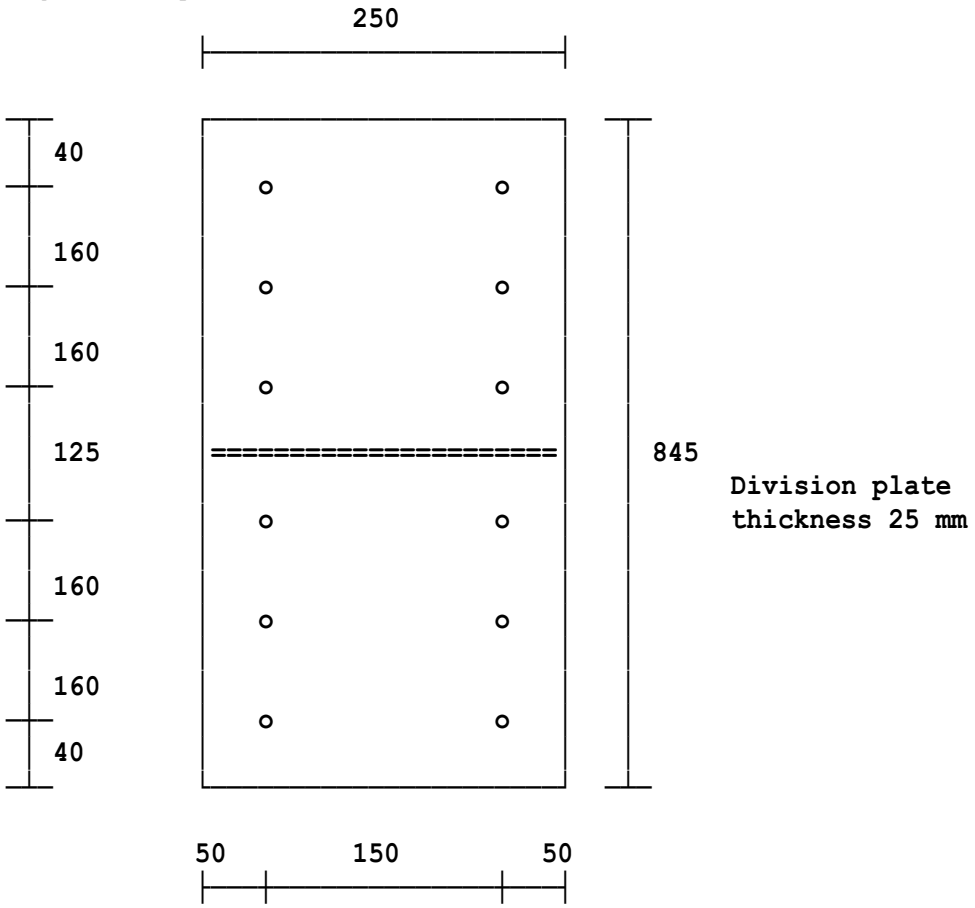

Flange cover plates	**2/**	**250 mm x 12 mm x 845 mm**
Number of bolts	**4/**	**6 (Total No of bolts=24)**
Packs	**2/**	**250 mm x 30 mm x 410 mm**
Bolt diameter	**20 mm**	
Bolt grade	**Preloaded HSFG bolts**	
	General grade (8.8), with grade 10 nuts.	
Web angles	**Provide web angles, each with four bolts.**	

NOTE: Packs to be fillet welded to the column flange.

Location: Ex4 - Non-bearing splice, HSFG bolts & web/flange plates

Bolted column splice

Non-bearing connection

Calculations are in accordance with EC3 Parts 1-1, 1-5 and 1-8.

Design assumptions:

- the column splice is about 500 mm above the floor level and hence the moment due to strut action is considered to be insignificant
- the centroidal axis of the splice is coincident with the centroidal axis of the members.

Factored loads

Permanent compressive axial load	NEdG=650 kN
Variable compressive axial load	NEdQ=700 kN
Design bending moment	MyEd=65 kNm
Design shear force	VEd=8 kN
Load from floor below splice	FstEd=405 kN

Upper column

254 x 254 x 73 UKC

Lower column

305 x 305 x 118 UKC

Thickness of flange cover plate	tfp=15 mm
Width of flange cover plate	bfp=250 mm
Bolt diameter	db=24 mm
Total no. of bolts in cover plate	nt=20
Pitch of bolts (vertically)	p1fp=80 mm
Spacing of bolts across columns	spac=110 mm
End distance	e1fp=50 mm
Bolt spacing (horizontally)	p2fp=150 mm
Allowance for gap	gap=10 mm

Web cover plates

Thickness of web plate	twp=12 mm
Width of web cover plate	bwp=190 mm
Bolt cross-centres	p2wp=100 mm
Total no. of bolts in web cleat	ntw=8

SPLICE SUMMARY - all dimensions in diagram are in mm

Flange cover plates:

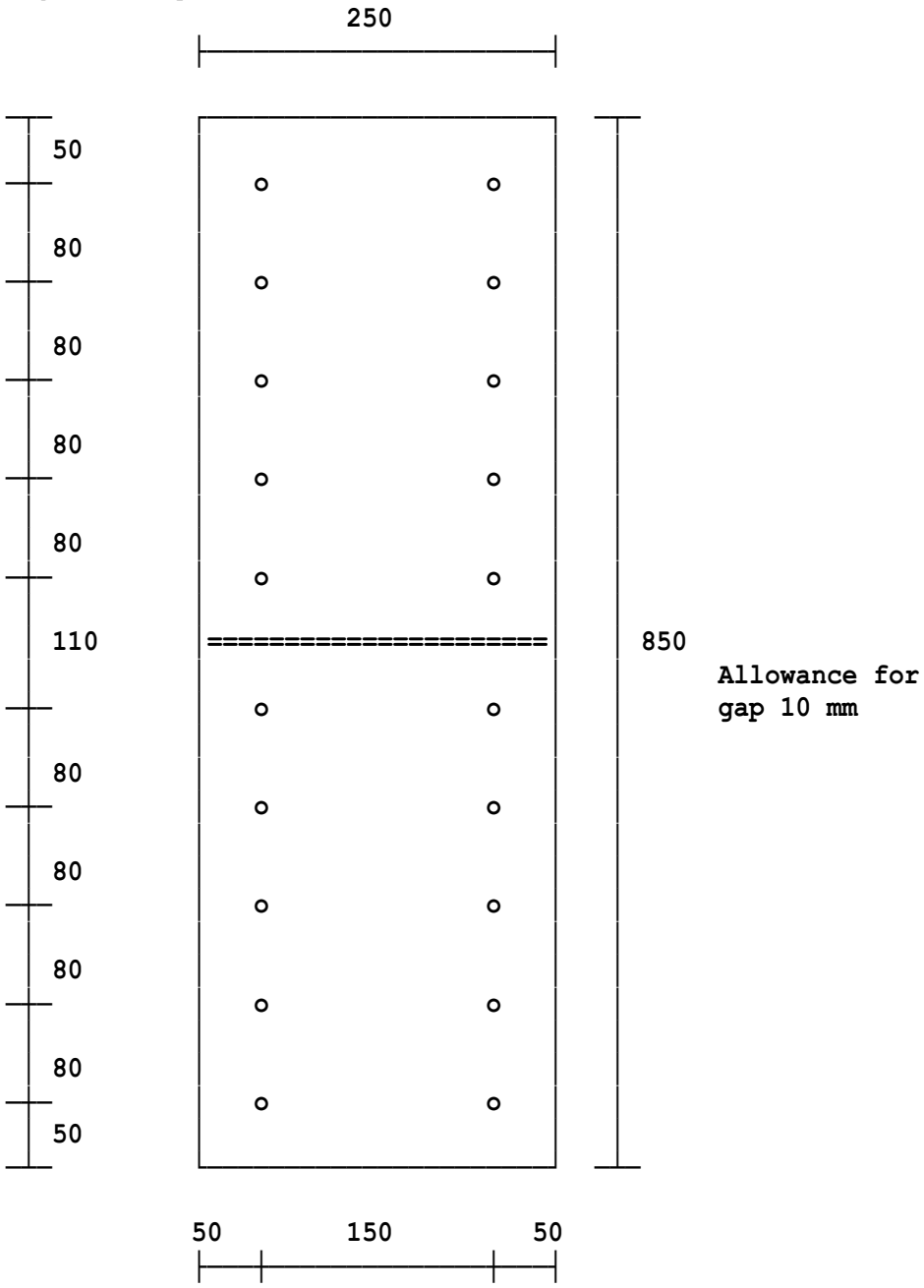

Flange cover plates	**2/ 250 mm x 15 mm x 850 mm**
Number of bolts	**4/ 10 (Total No of bolts=40)**
Packs	**2/ 250 mm x 30 mm x 420 mm**
Bolt diameter	**24 mm**
Bolt grade	**Preloaded HSFG bolts**
	General grade (8.8), with grade 10 nuts.

Web cover plates:

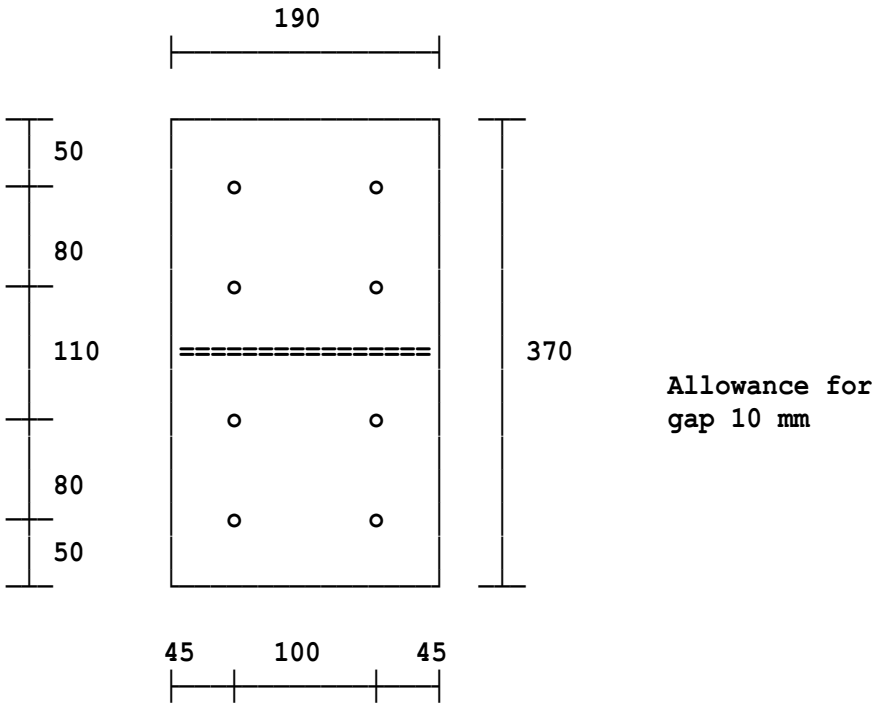

Web cover plates 2/ 190 mm x 12 mm x 370 mm
Number of bolts 2/ 4 (Total No of bolts=8)

Location: Moment connection within middle third

Calculations are in accordance with BS5950-1:2000 and follow the procedure given in the SCI publication entitled 'Joints in Steel Construction Moment Connections'.

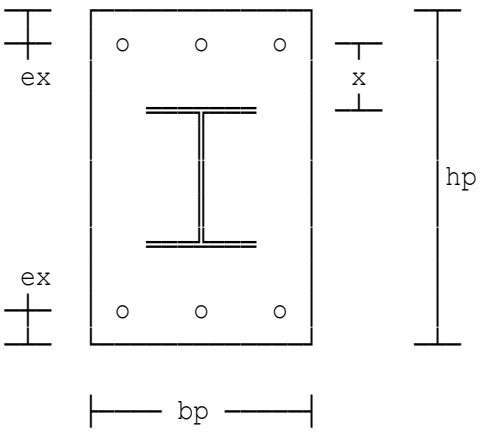

Design assumptions:
- the bolt arrangement is symmetrical about the centre line (x-x axis) of column
- any applied moment is reversible and is carried by half the bolts
- the connection consists of two columns having the same serial size and end plate arrangement.

Factored moment	M=200 kNm
Factored shear force	V=75 kN
Axial force (+ve compression)	N=2000 kN
Load from floor below splice	Fst=770 kN

305 x 305 x 97 UC.

Diameter of bolts	bd=24 mm
Thickness of plate	tp=25 mm
Total number of bolts	bn=8
Length of end plate	hp=600 mm
Distance to first row of bolts	ex=75 mm
Width of end plate	bp=600 mm

CONNECTION SUMMARY

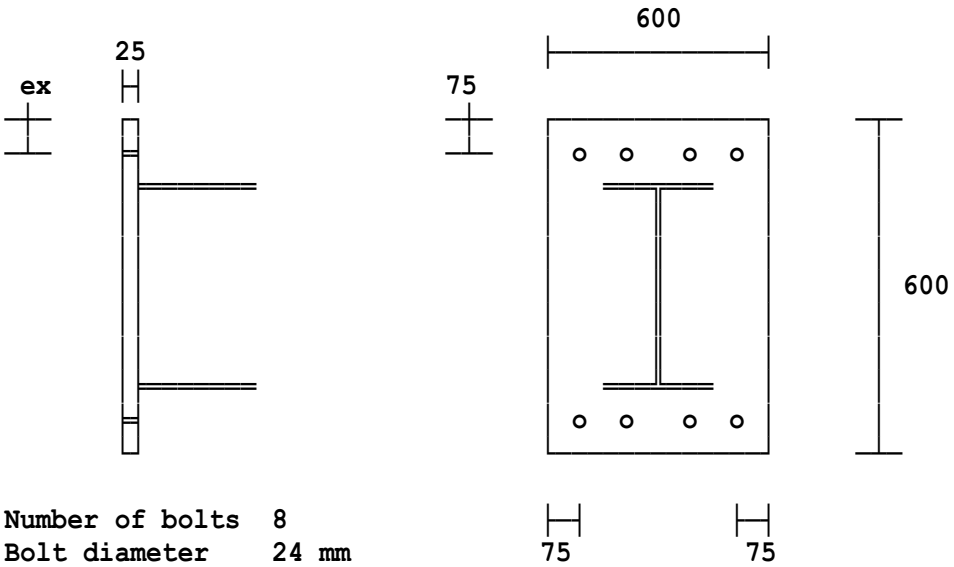

Number of bolts	**8**	
Bolt diameter	**24 mm**	
Bolt grade	**8.8**	
Welds	**Tension flange fillet weld**	**8 mm**
	Web fillet weld	**8 mm**
	Compression flange fillet weld	**8 mm**
Column section	**305 x 305 x 97 UC**	

Location: Moment connection outside middle third

Calculations are in accordance with BS5950-1:2000 and follow the procedure given in the SCI publication entitled 'Joints in Steel Construction Moment Connections'.

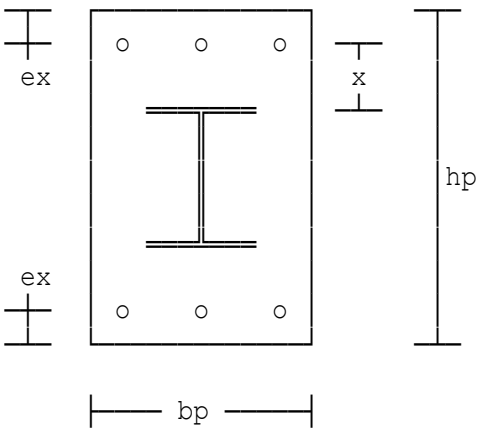

Design assumptions:
- the bolt arrangement is symmetrical about the centre line (x-x axis) of column
- any applied moment is reversible and is carried by half the bolts
- the connection consists of two columns having the same serial size and end plate arrangement.

Factored moment	M=300 kNm
Factored shear force	V=75 kN
Axial force (+ve compression)	N=2000 kN
Load from floor below splice	Fst=700 kN

305 x 305 x 97 UC.

Diameter of bolts	bd=24 mm
Thickness of plate	tp=25 mm
Total number of bolts	bn=8
Length of end plate	hp=600 mm
Distance to first row of bolts	ex=75 mm
Width of end plate	bp=600 mm

Selected fillet weld size swt=9 mm

CONNECTION SUMMARY

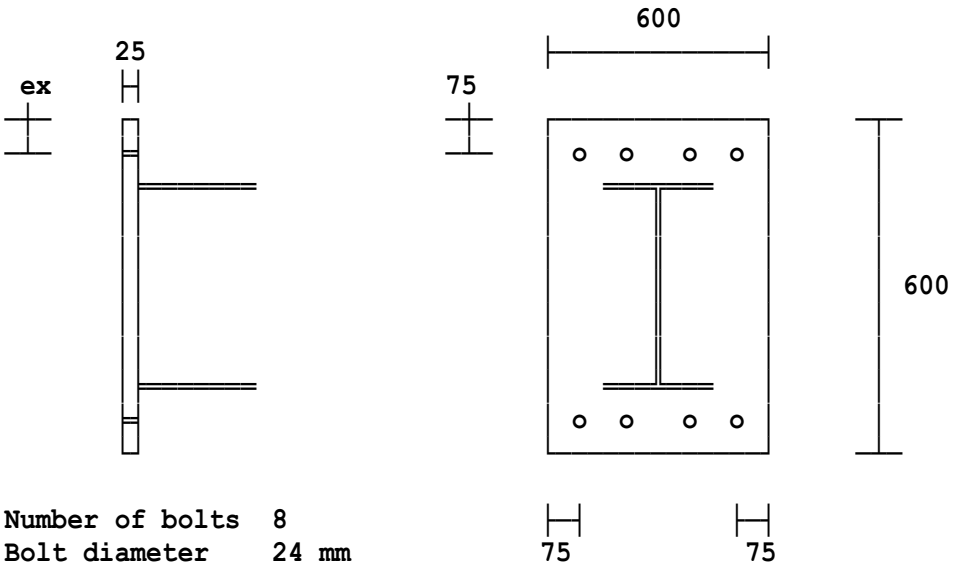

Number of bolts	**8**	
Bolt diameter	**24 mm**	
Bolt grade	**8.8**	
Welds	**Tension flange fillet weld**	**9 mm**
	Web fillet weld	**8 mm**
	Compression flange fillet weld	**9 mm**
Column section	**305 x 305 x 97 UC**	

Location: Bolts along side of base

Calculations are in accordance with BS5950-1:2000 and follow the procedure given in the SCI publication entitled 'Joints in Steel Construction Moment Connections'.

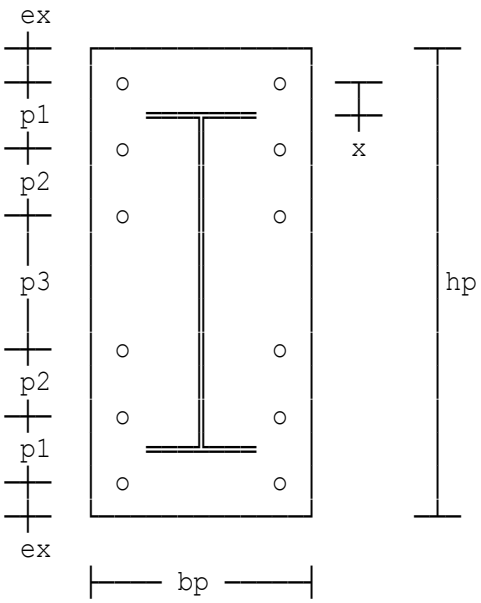

Design assumptions:
- the bolt arrangement is symmetrical about the centre line (x-x axis)
- moment is reversible
- moment is carried by half the bolts
- shear is carried by the other half of the bolts.
- the connection consists of two columns having the same serial size and end plate arrangements.

Factored moment	M=400 kNm
Factored shear force	V=75 kN
Axial force (+ve compression)	N=300 kN
Load from floor below splice	Fst=210 kN

305 x 305 x 97 UC.

Diameter of bolts	bd=30 mm
Thickness of plate	tp=25 mm
Total number of bolts	bn=12
Length of end plate	hp=650 mm
Distance to first row of bolts	ex=90 mm
Pitch to second row of bolts	p1=100 mm
Pitch of tension bolts	p2=90 mm
Width of end plate	bp=320 mm
Bolt cross-centres	g=200 mm

Penetration butt weld size	sbt=6 mm
Superimposed fillet weld size	swt=9 mm

Full strength weld used

CONNECTION SUMMARY

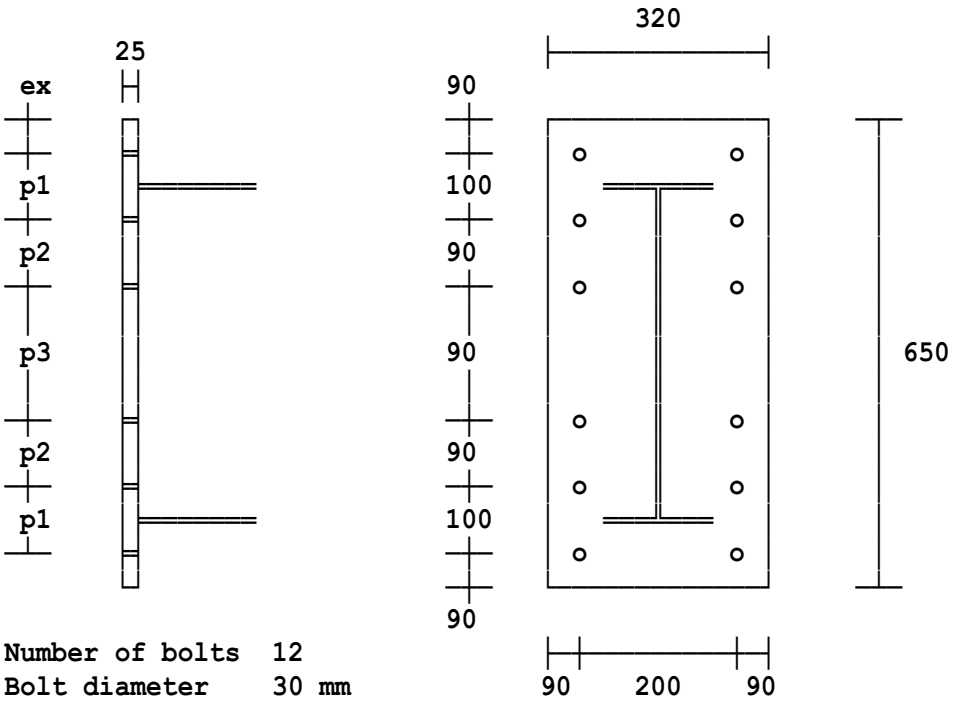

Number of bolts	**12**	
Bolt diameter	**30 mm**	
Bolt grade	**8.8**	
Tension	**Partial penetration butt welds**	**6 mm**
Flange Welds	**Superimposed fillet welds**	**9 mm**
	Web fillet weld	**8 mm**
Compression	**Partial penetration butt welds**	**6 mm**
Flange Welds	**Superimposed fillet welds**	**9 mm**
Column section	**305 x 305 x 97 UC**	

Location: Moment connection within middle third - RHS

Calculations are in accordance with BS5950-1:2000 and follow the procedure given in the SCI publication entitled 'Joints in Steel Construction Moment Connections'.

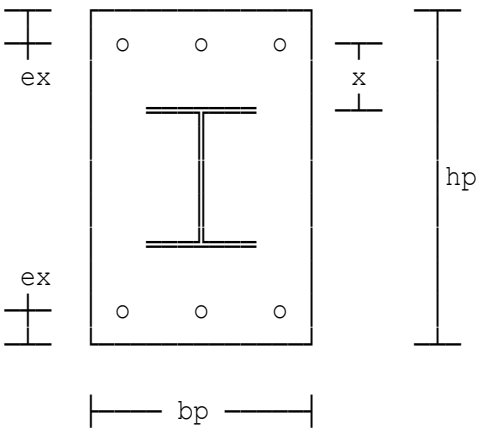

Design assumptions:
- the bolt arrangement is symmetrical about the centre line (x-x axis) of column
- any applied moment is reversible and is carried by half the bolts
- the connection consists of two columns having the same serial size and end plate arrangement.

Factored moment	M=400 kNm
Factored shear force	V=75 kN
Axial force (+ve compression)	N=2500 kN
Load from floor below splice	Fst=770 kN

300 x 300 x 10 SHS - Hot finished.
Properties (cm): A=115 rx=11.8 Zx=1070 Sx=1250 Ix=16000 J=24800 C=1580

Diameter of bolts	bd=24 mm
Thickness of plate	tp=30 mm
Total number of bolts	bn=8
Length of end plate	hp=550 mm
Distance to first row of bolts	ex=75 mm
Width of end plate	bp=550 mm

Selected fillet weld size swt=16 mm

Full strength weld used

CONNECTION SUMMARY

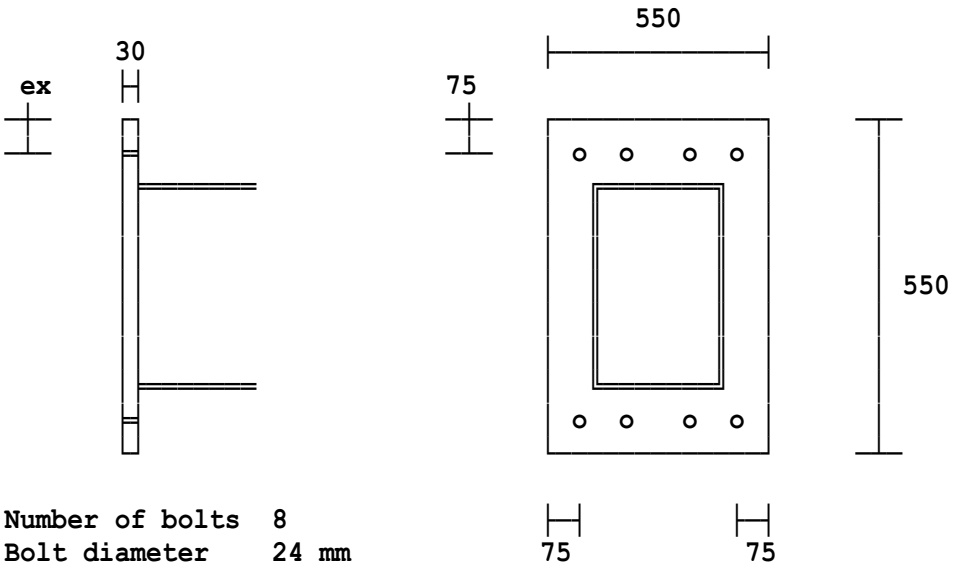

Number of bolts	**8**	
Bolt diameter	**24 mm**	
Bolt grade	**8.8**	
Welds	**Tension flange fillet weld**	**16 mm**
	Web fillet weld	**8 mm**
	Compression flange fillet weld	**16 mm**
Column section	**300 x 300 x 10 Hot Finished SHS**	

Location: Moment connection outside middle third - RHS

Calculations are in accordance with BS5950-1:2000 and follow the procedure given in the SCI publication entitled 'Joints in Steel Construction Moment Connections'.

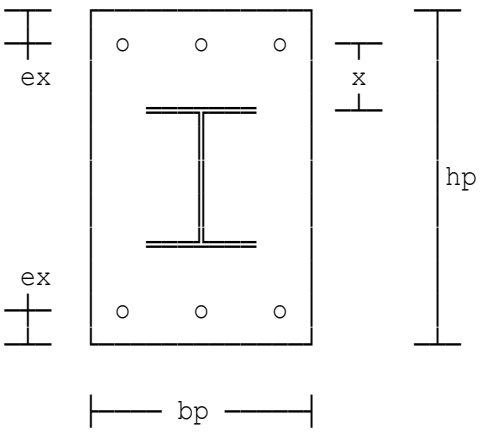

Design assumptions:
- the bolt arrangement is symmetrical about the centre line (x-x axis) of column
- any applied moment is reversible and is carried by half the bolts
- the connection consists of two columns having the same serial size and end plate arrangement.

Factored moment	M=190 kNm
Factored shear force	V=75 kN
Axial force (+ve compression)	N=700 kN
Load from floor below splice	Fst=250 kN

300 x 300 x 10 SHS - Hot finished.
Properties (cm): A=115 rx=11.8 Zx=1070 Sx=1250 Ix=16000 J=24800 C=1580

Diameter of bolts	bd=20 mm
Thickness of plate	tp=20 mm
Total number of bolts	bn=4
Length of end plate	hp=550 mm
Distance to first row of bolts	ex=75 mm
Width of end plate	bp=550 mm

Selected fillet weld size swt=12 mm

CONNECTION SUMMARY

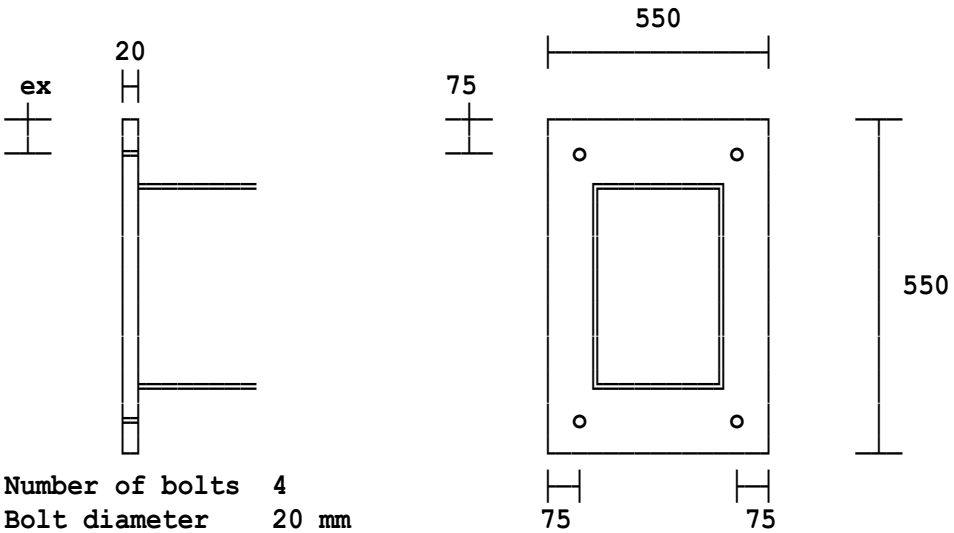

Number of bolts	**4**	
Bolt diameter	**20 mm**	
Bolt grade	**8.8**	
Welds	**Tension flange fillet weld**	**12 mm**
	Web fillet weld	**8 mm**
	Compression flange fillet weld	**12 mm**
Column section	**300 x 300 x 10 Hot Finished SHS**	

Location: Axial load only

Calculations are in accordance with BS5950-1:2000 and follow the procedure given in the SCI publication entitled 'Joints in Steel Construction Moment Connections'.

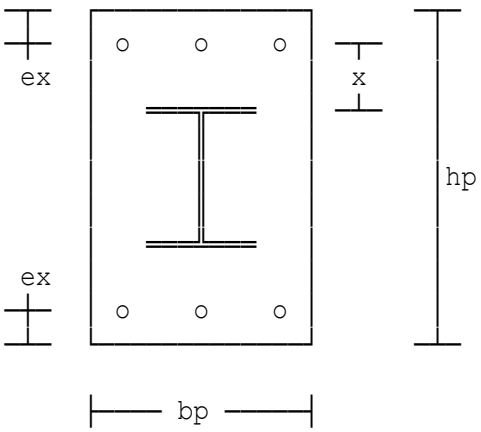

Design assumptions:
- the bolt arrangement is symmetrical about the centre line (x-x axis) of column
- any applied moment is reversible and is carried by half the bolts
- the connection consists of two columns having the same serial size and end plate arrangement.

Factored moment	M=0 kNm
Factored shear force	V=75 kN
Axial force (+ve compression)	N=2000 kN
Load from floor below splice	Fst=540 kN

305 x 305 x 97 UC.

Diameter of bolts	bd=20 mm
Thickness of plate	tp=24 mm
Total number of bolts	bn=4
Length of end plate	hp=600 mm
Distance to first row of bolts	ex=75 mm
Width of end plate	bp=600 mm

CONNECTION SUMMARY

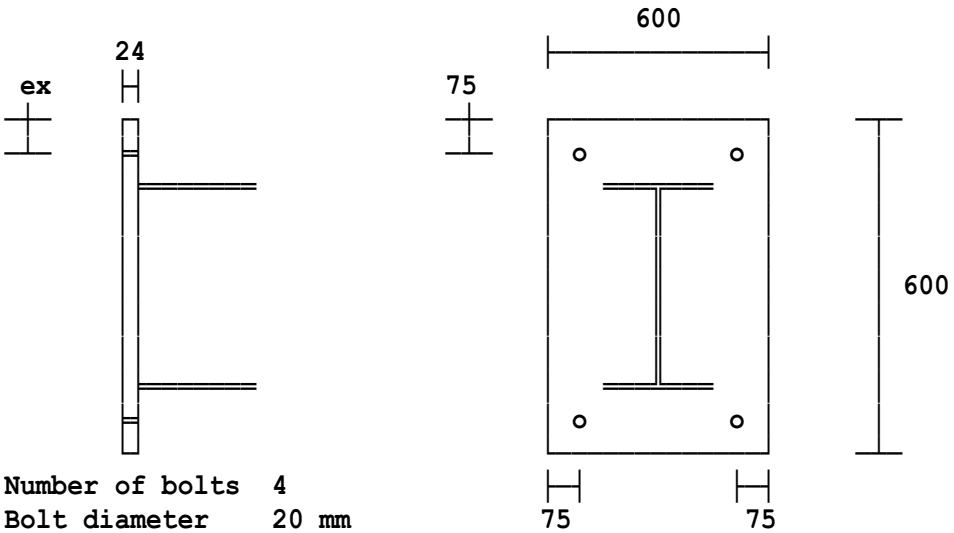

Number of bolts	**4**	
Bolt diameter	**20 mm**	
Bolt grade	**8.8**	
Welds	**Tension flange fillet weld**	**8 mm**
	Web fillet weld	**8 mm**
	Compression flange fillet weld	**8 mm**
Column section	**305 x 305 x 97 UC**	

Location: Ex1- Moment connection within middle third

Calculations are in accordance with EC3 Parts 1-1, 1-5, 1-8 and follow the procedure given in the SCI publication entitled 'Joints in Steel Construction Moment Connections'.

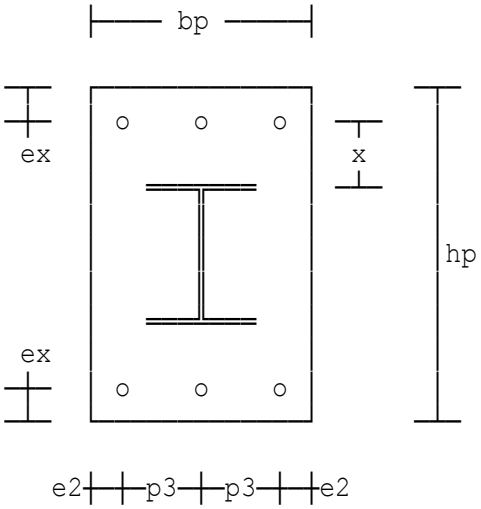

Design assumptions:
- the bolt arrangement is symmetrical about the centre line (y-y axis) of column
- any applied moment is reversible and is carried by half the bolts
- the connection consists of two columns having the same serial size and end plate arrangement.

Factored moment	MyEd=200 kNm
Factored shear force	VEd=75 kN
Axial force (+ve compression)	NEd=2000 kN
Load from floor below splice	FstEd=770 kN

Grade details

Supported column details

305 x 305 x 97 UKC

Bolt details

Diameter of bolts	db=24 mm
Tensile resistance (EC3 Part 1-8)	FtRd=k2*fub*At/(gamM2*10^3)=203.33 kN

End plate details

Thickness of plate	tp=25 mm
Total number of bolts	bn=8
Length of end plate	hp=600 mm
Distance to first row of bolts	ex=75 mm
Width of end plate	bp=600 mm
Assumed web fillet weld size	sww=8 mm
Assumed flange fillet weld size	swf=12 mm

Column tension flange welds

Weld design strength	fvwd=fu/SQR(3)/(betaw*gamM2) =222.79 N/mm²
Weld design strength	fvwd=fu/SQR(3)/(betaw*gamM2) =222.79 N/mm²
Selected fillet weld size	swt=8 mm

Column web welds

Selected fillet weld size	sfw=8 mm
Resistance of weld for shear	FwRds=2*0.7*sfw*fvwd*Lws/10^3 =615.58 kN

Compression welds

CONNECTION SUMMARY - all dimensions in diagram are in mm

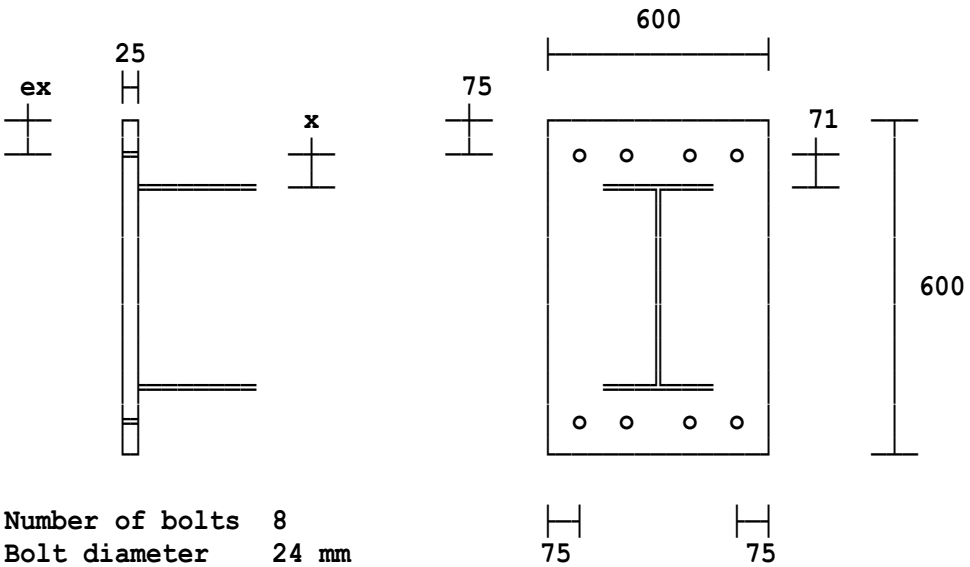

Number of bolts	**8**	
Bolt diameter	**24 mm**	
Bolt grade	**8.8**	
Welds	**Tension flange fillet weld**	**8 mm**
	Web fillet weld	**8 mm**
	Compression flange fillet weld	**8 mm**
Column section	**305 x 305 x 97 UKC**	

Location: Ex2 - Moment connection outside middle third

Calculations are in accordance with EC3 Parts 1-1, 1-5, 1-8 and follow the procedure given in the SCI publication entitled 'Joints in Steel Construction Moment Connections'.

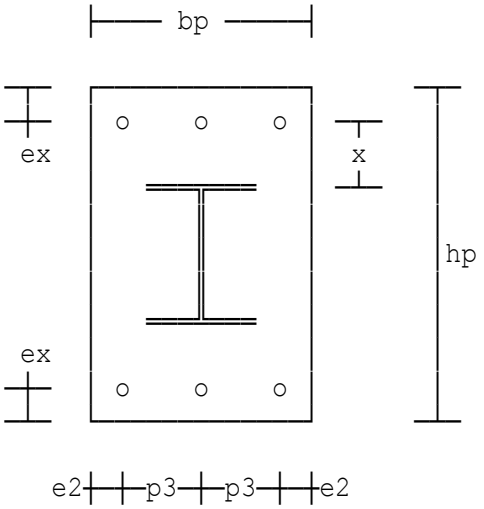

Design assumptions:
- the bolt arrangement is symmetrical about the centre line (y-y axis) of column
- any applied moment is reversible and is carried by half the bolts
- the connection consists of two columns having the same serial size and end plate arrangement.

Factored moment	MyEd=300 kNm
Factored shear force	VEd=75 kN
Axial force (+ve compression)	NEd=2000 kN
Load from floor below splice	FstEd=700 kN

Grade details

Supported column details

305 x 305 x 97 UKC

Bolt details

Diameter of bolts	db=24 mm
Tensile resistance (EC3 Part 1-8)	FtRd=k2*fub*At/(gamM2*10^3)=203.33 kN

End plate details

Thickness of plate	tp=25 mm
Total number of bolts	bn=8
Length of end plate	hp=600 mm
Distance to first row of bolts	ex=75 mm
Width of end plate	bp=600 mm
Assumed web fillet weld size	sww=8 mm
Assumed flange fillet weld size	swf=12 mm

Column tension flange welds

Weld design strength	fvwd=fu/SQR(3)/(betaw*gamM2)
	=222.79 N/mm²
Weld size required	swfr=FwEdf*10^3/(0.7*fvwd)=2.7877 mm
Selected fillet weld size	swt=9 mm

Column web welds

Selected fillet weld size	sfw=8 mm
Resistance of weld for shear	FwRds=2*0.7*sfw*fvwd*Lws/10^3
	=615.58 kN

Compression welds

CONNECTION SUMMARY - all dimensions in diagram are in mm

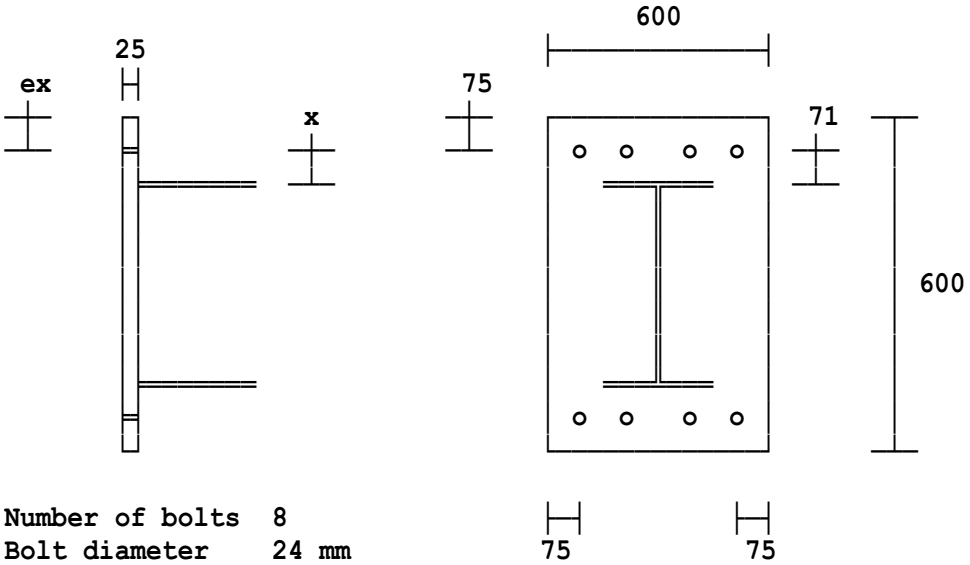

Number of bolts	**8**	
Bolt diameter	**24 mm**	
Bolt grade	**8.8**	
Welds	**Tension flange fillet weld**	**9 mm**
	Web fillet weld	**8 mm**
	Compression flange fillet weld	**9 mm**
Column section	**305 x 305 x 97 UKC**	

Location: Ex3 - Bolts along side of base

Calculations are in accordance with EC3 Parts 1-1, 1-5, 1-8 and follow the procedure given in the SCI publication entitled 'Joints in Steel Construction Moment Connections'.

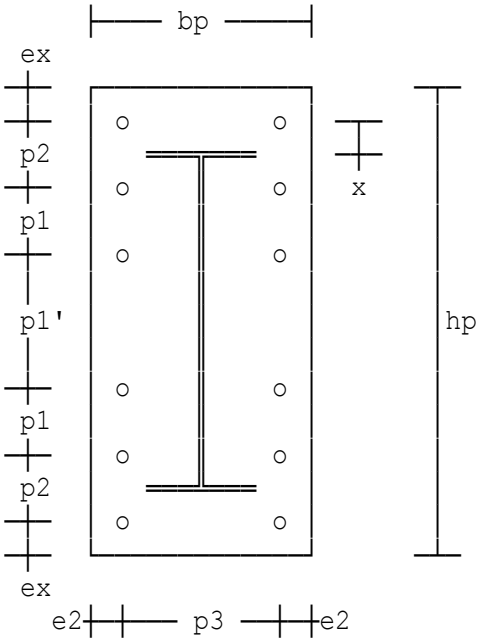

Design assumptions:
- the bolt arrangement is symmetrical about the centre line (y-y axis)
- moment is reversible
- moment is carried by half the bolts
- shear is carried by the other half of the bolts.
- the connection consists of two columns having the same serial size and end plate arrangements.

Factored moment	MyEd=200 kNm
Factored shear force	VEd=75 kN
Axial force (+ve compression)	NEd=300 kN
Load from floor below splice	FstEd=210 kN

Grade details

Supported column details

305 x 305 x 97 UKC

Bolt details

Diameter of bolts	db=30 mm
Tensile resistance (EC3 Part 1-8)	FtRd=k2*fub*At/(gamM2*10^3)=323.14 kN

End plate details

Thickness of plate	tp=25 mm
Total number of bolts	bn=8
Length of end plate	hp=650 mm
Distance to first row of bolts	ex=90 mm
Pitch to second row of bolts	p2=150 mm
Width of end plate	bp=320 mm
Bolt cross-centres	p3=200 mm
Assumed web fillet weld size	sww=10 mm
Assumed flange fillet weld size	swf=12 mm

Column tension flange welds

Weld design strength	fvwd=fu/SQR(3)/(betaw*gamM2) =222.79 N/mm²
Weld size required	swfr=FwEdf*10^3/(0.7*fvwd)=9.318 mm
Selected fillet weld size	swt=10 mm

Column web welds

Full strength weld used	
Selected fillet weld size	sfw=8 mm

Compression welds

CONNECTION SUMMARY - all dimensions in diagram are in mm

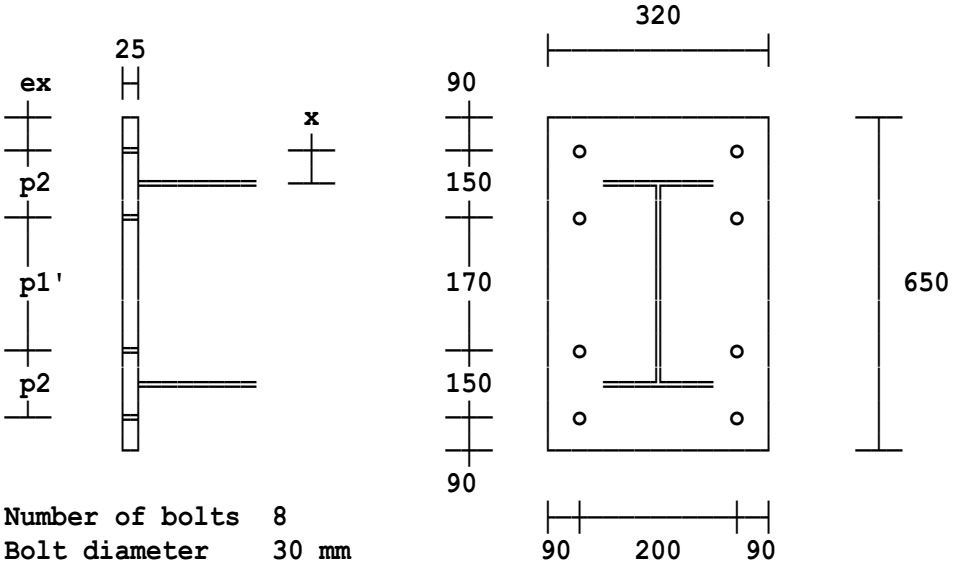

Number of bolts	**8**	
Bolt diameter	**30 mm**	
Bolt grade	**8.8**	
Welds	**Tension flange fillet weld**	**10 mm**
	Web fillet weld	**8 mm**
	Compression flange fillet weld	**10 mm**
Column section	**305 x 305 x 97 UKC**	

Location: Ex4 - Moment connection within middle third - RHS

Calculations are in accordance with EC3 Parts 1-1, 1-5, 1-8 and follow the procedure given in the SCI publication entitled 'Joints in Steel Construction Moment Connections'.

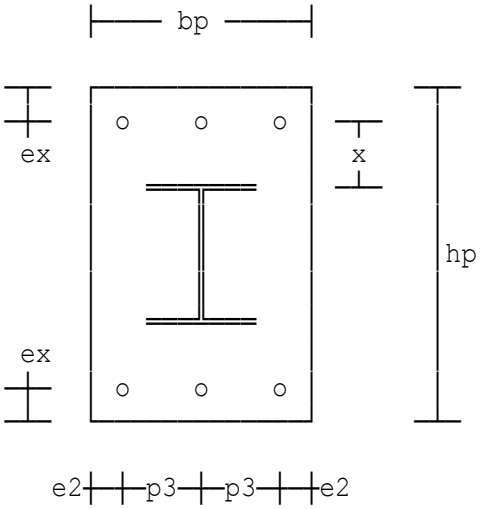

Design assumptions:
- the bolt arrangement is symmetrical about the centre line (y-y axis) of column
- any applied moment is reversible and is carried by half the bolts
- the connection consists of two columns having the same serial size and end plate arrangement.

Factored moment	MyEd=400 kNm
Factored shear force	VEd=75 kN
Axial force (+ve compression)	NEd=2500 kN
Load from floor below splice	FstEd=770 kN

Grade details

Supported column details

300 x 300 x 10 SHS - Hot finished.
Properties (cm): A=115 iy=11.8 Wely=1070 Wply=1250 Iy=16000 It=24800
Wt=1580

Bolt details

Diameter of bolts	db=24 mm
Tensile resistance (EC3 Part 1-8)	FtRd=k2*fub*At/(gamM2*10^3)=203.33 kN

End plate details

Thickness of plate	tp=30 mm
Total number of bolts	bn=8
Length of end plate	hp=550 mm
Distance to first row of bolts	ex=75 mm
Width of end plate	bp=550 mm
Assumed web fillet weld size	sww=8 mm
Assumed flange fillet weld size	swf=12 mm

Column tension flange welds

Weld design strength	fvwd=fu/SQR(3)/(betaw*gamM2) =222.79 N/mm²
Weld size required	swfr=FwEdf*10^3/(0.7*fvwd)=15.542 mm
Selected fillet weld size	swt=16 mm

Column web welds

Full strength weld used	
Selected fillet weld size	sfw=8 mm

Compression welds

CONNECTION SUMMARY - all dimensions in diagram are in mm

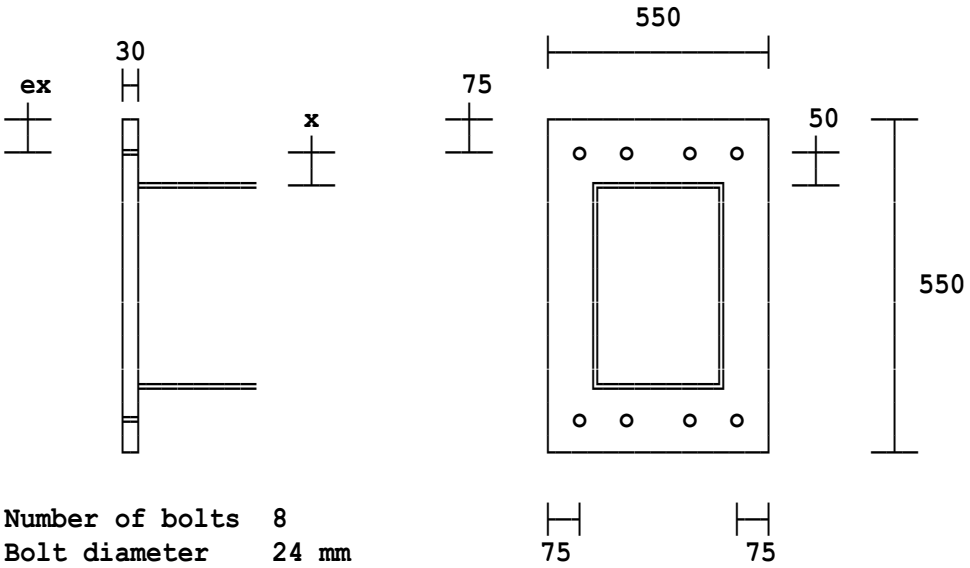

Number of bolts	**8**	
Bolt diameter	**24 mm**	
Bolt grade	**8.8**	
Welds	**Tension flange fillet weld**	**16 mm**
	Web fillet weld	**8 mm**
	Compression flange fillet weld	**16 mm**
Column section	**300 x 300 x 10 Hot Finished SHS**	

Location: Ex5 - Moment connection outside middle third - RHS

Calculations are in accordance with EC3 Parts 1-1, 1-5, 1-8 and follow the procedure given in the SCI publication entitled 'Joints in Steel Construction Moment Connections'.

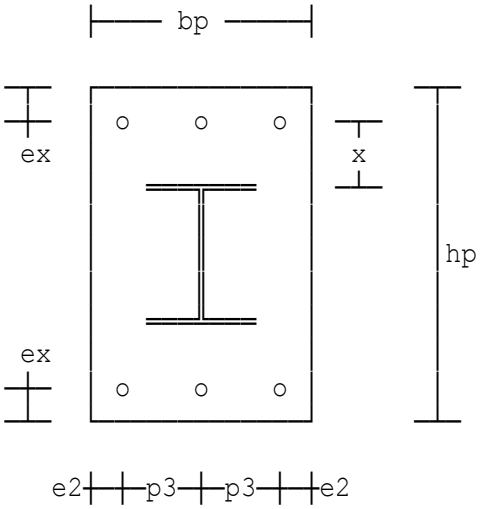

Design assumptions:
- the bolt arrangement is symmetrical about the centre line (y-y axis) of column
- any applied moment is reversible and is carried by half the bolts
- the connection consists of two columns having the same serial size and end plate arrangement.

Factored moment	MyEd=190 kNm
Factored shear force	VEd=75 kN
Axial force (+ve compression)	NEd=700 kN
Load from floor below splice	FstEd=250 kN

Grade details

Supported column details

300 x 300 x 10 SHS - Hot finished.
Properties (cm): A=115 iy=11.8 Wely=1070 Wply=1250 Iy=16000 It=24800
Wt=1580

Bolt details

Diameter of bolts	db=20 mm
Tensile resistance (EC3 Part 1-8)	FtRd=k2*fub*At/(gamM2*10^3)=141.12 kN

End plate details

Thickness of plate	tp=20 mm
Total number of bolts	bn=4
Length of end plate	hp=550 mm
Distance to first row of bolts	ex=75 mm
Width of end plate	bp=550 mm
Assumed web fillet weld size	sww=8 mm
Assumed flange fillet weld size	swf=12 mm

Column tension flange welds

Weld design strength	fvwd=fu/SQR(3)/(betaw*gamM2) =222.79 N/mm²
Weld size required	swfr=FwEdf*10^3/(0.7*fvwd)=10.101 mm
Selected fillet weld size	swt=12 mm

Column web welds

Selected fillet weld size	sfw=8 mm
Resistance of weld for shear	FwRds=2*0.7*sfw*fvwd*Lws/10^3 =673.71 kN

Compression welds

CONNECTION SUMMARY - all dimensions in diagram are in mm

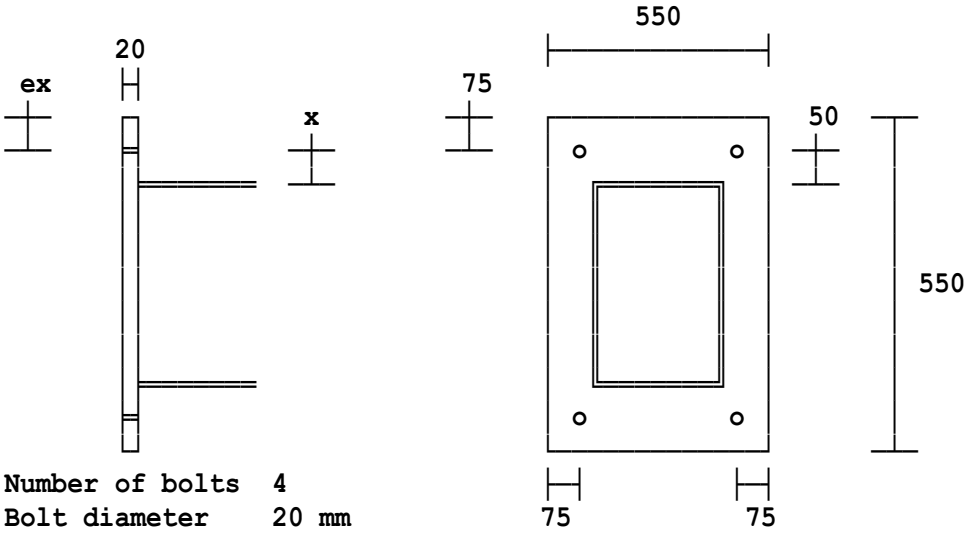

Number of bolts	**4**	
Bolt diameter	**20 mm**	
Bolt grade	**8.8**	
Welds	**Tension flange fillet weld**	**12 mm**
	Web fillet weld	**8 mm**
	Compression flange fillet weld	**12 mm**
Column section	**300 x 300 x 10 Hot Finished SHS**	

Location: Ex6 - Axial load only

Calculations are in accordance with EC3 Parts 1-1, 1-5, 1-8 and follow the procedure given in the SCI publication entitled 'Joints in Steel Construction Moment Connections'.

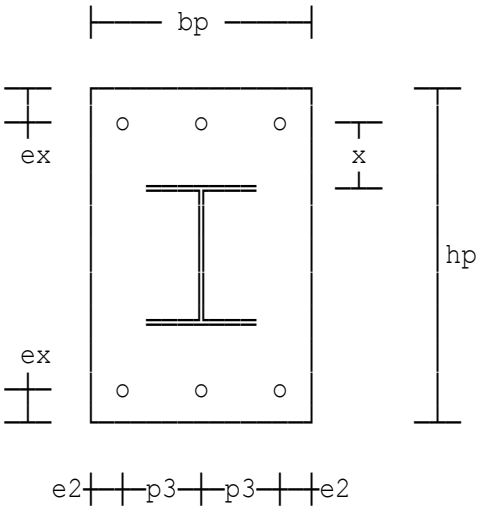

Design assumptions:
- the bolt arrangement is symmetrical about the centre line (y-y axis) of column
- any applied moment is reversible and is carried by half the bolts
- the connection consists of two columns having the same serial size and end plate arrangement.

Factored moment	MyEd=0 kNm
Factored shear force	VEd=75 kN
Axial force (+ve compression)	NEd=2000 kN
Load from floor below splice	FstEd=540 kN

Grade details

Supported column details

305 x 305 x 97 UKC

Bolt details

Diameter of bolts	db=20 mm
Tensile resistance (EC3 Part 1-8)	FtRd=k2*fub*At/(gamM2*10^3)=141.12 kN

End plate details

Thickness of plate	tp=24 mm
Total number of bolts	bn=4
Length of end plate	hp=600 mm
Distance to first row of bolts	ex=75 mm
Width of end plate	bp=600 mm
Assumed web fillet weld size	sww=8 mm
Assumed flange fillet weld size	swf=12 mm

Column tension flange welds

Weld design strength	fvwd=fu/SQR(3)/(betaw*gamM2) =222.79 N/mm²
Weld design strength	fvwd=fu/SQR(3)/(betaw*gamM2) =222.79 N/mm²
Selected fillet weld size	swt=8 mm

Column web welds

Selected fillet weld size	sfw=8 mm
Resistance of weld for shear	FwRds=2*0.7*sfw*fvwd*Lws/10^3 =615.58 kN

Compression welds

CONNECTION SUMMARY - all dimensions in diagram are in mm

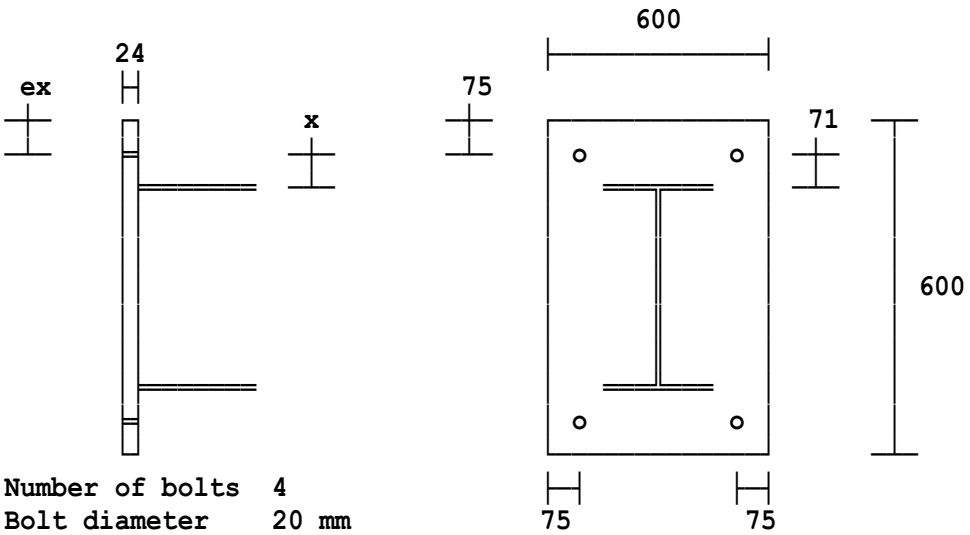

Number of bolts	**4**	
Bolt diameter	**20 mm**	
Bolt grade	**8.8**	
Welds	**Tension flange fillet weld**	**8 mm**
	Web fillet weld	**8 mm**
	Compression flange fillet weld	**8 mm**
Column section	**305 x 305 x 97 UKC**	

Location: Ex1 - from 'Guide to BS5950'

Bolted beam splice

Design assumptions:

- the flange plates resist the full bending moment & axial loading
- the web splice resists the vertical shear and torsional moment induced by the eccentricity of this loading on the bolt groups on each side of the joint
- the splice uses HSFG bolts to avoid producing bolt slip and consequent additional beam deflection.

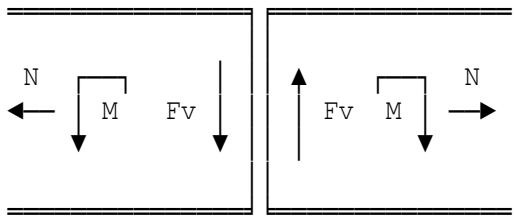

Design of splice plate subjected to an applied moment, shear force and axial load to BS5950.

All loads and moment are factored.

Shear force	Fv=250 kN
Bending moment	M=150 kNm
Axial force (+ve compression)	N=0 kN

457 x 152 x 60 UB.

Total number of bolts	n=8
Diameter of web bolts	bdw=20 mm
Bolt pitch	p=90 mm
Vertical edge distance	ed1=35 mm
Horizontal edge distance	ed2=35 mm
Distance between bolt centres	g=70 mm
Thickness of web plate	twp=8 mm
Slip factor for preloaded bolts	mu=0.5
Coefficient for type of hole	Ks=1
Allowance for clearance btwn ends	cl=6 mm

WEB COVER PLATE SUMMARY - all dimensions in diagram are in mm

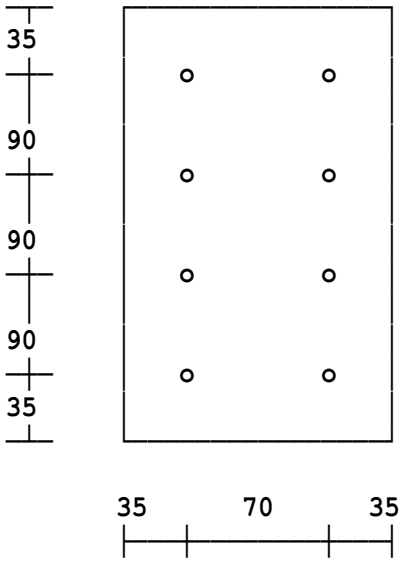

Web cover plates	**2No/140 mm x 8 mm x 340 mm**
Number of bolts	**8**
Bolt diameter	**20 mm**
Bolt grade	**HSFG**
	General grade (8.8) to BS4395 Part 1
Nut grade	**10**

FLANGE SPLICE

Plate details

Thickness of flange plate	tcp=15 mm
Width of flange cover plate	Bfp=150 mm
Projection of flange cover plate	P=220 mm

Bolt details

Bolt spacing (across the beam)	crs=90 mm
Total no. of bolts in cover plate	np=12
Pitch of bolts (along the beam)	pit=70 mm
Spacing of bolts across beams	spac=70 mm

FLANGE COVER PLATE SUMMARY - all dimensions in diagram are in mm

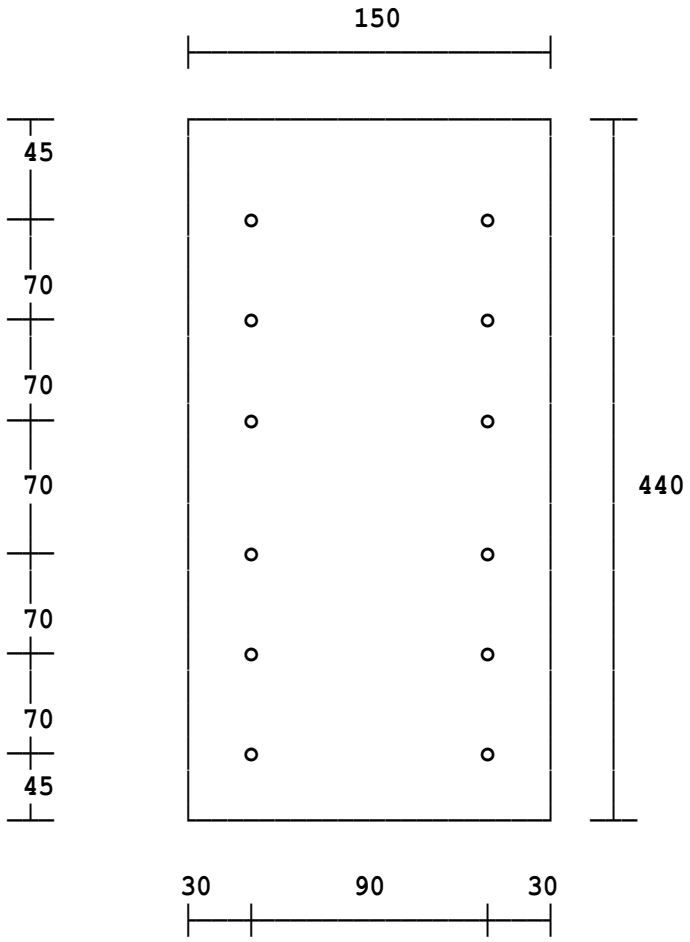

Flange cover plates	**2No/150 mm x 15 mm x 440 mm**
Number of bolts	**12 per flange cover plate**
Bolt diameter	**20 mm**
Bolt grade	**HSFG**
	General grade (8.8) to BS4395 Part 1
Nut grade	**10**

Location: Ex2 - Moment connections example

Bolted beam splice

Design assumptions:

- the flange plates resist the full bending moment & axial loading
- the web splice resists the vertical shear and torsional moment induced by the eccentricity of this loading on the bolt groups on each side of the joint
- the splice uses HSFG bolts to avoid producing bolt slip and consequent additional beam deflection.

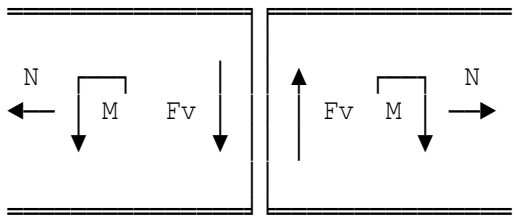

Design of splice plate subjected to an applied moment, shear force and axial load to BS5950.

All loads and moment are factored.

Shear force	Fv=150 kN
Bending moment	M=190 kNm
Axial force (+ve compression)	N=150 kN

457 x 191 x 67 UB.

Total number of bolts	n=6
Diameter of web bolts	bdw=20 mm
Bolt pitch	p=100 mm
Vertical edge distance	ed1=50 mm
Horizontal edge distance	ed2=50 mm
Distance between bolt centres	g=100 mm
Thickness of web plate	twp=10 mm
Slip factor for preloaded bolts	mu=0.5
Coefficient for type of hole	Ks=1
Allowance for clearance btwn ends	cl=10 mm

WEB COVER PLATE SUMMARY - all dimensions in diagram are in mm

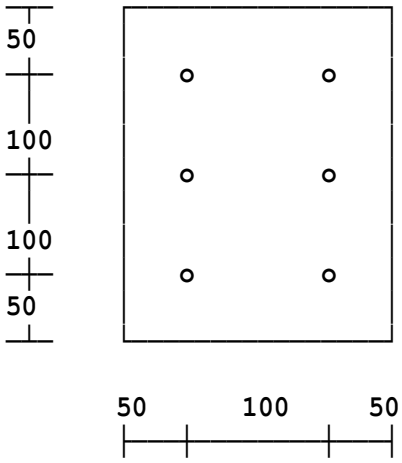

Web cover plates	**2No/200 mm x 10 mm x 300 mm**
Number of bolts	**6**
Bolt diameter	**20 mm**
Bolt grade	**HSFG**
	General grade (8.8) to BS4395 Part 1
Nut grade	**10**

FLANGE SPLICE

Plate details

Thickness of flange plate	tcp=12 mm
Width of flange cover plate	Bfp=180 mm
Projection of flange cover plate	P=360 mm

Bolt details

Bolt spacing (across the beam)	crs=90 mm
Total no. of bolts in cover plate	np=16
Pitch of bolts (along the beam)	pit=75 mm
Spacing of bolts across beams	spac=150 mm
Effective length of beam	Le=5.1 m
Distance between pts.of restraint	L=6 m
point of restraint	Lx=2 m

FLANGE COVER PLATE SUMMARY - all dimensions in diagram are in mm

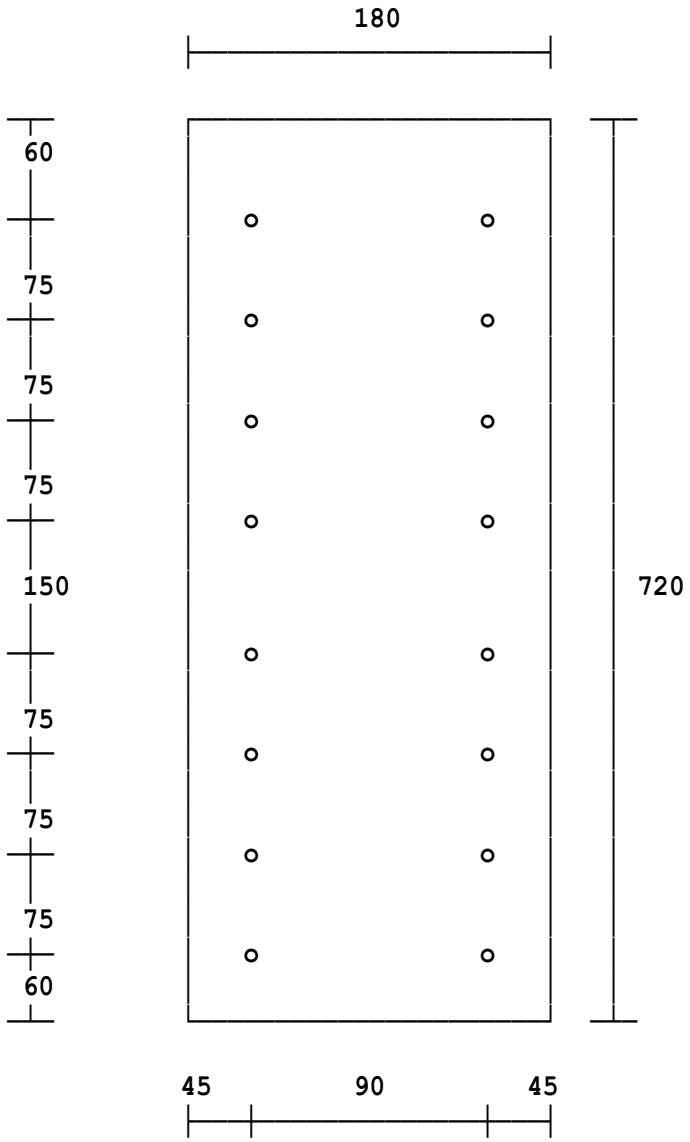

Flange cover plates	**2No/180 mm x 12 mm x 720 mm**
Number of bolts	**16 per flange cover plate**
Bolt diameter	**20 mm**
Bolt grade	**HSFG**
	General grade (8.8) to BS4395 Part 1
Nut grade	**10**

Location: Ex3 - Web cleat 4 rows of bolts, double flange plates

Bolted beam splice

Design assumptions:

- the flange plates resist the full bending moment & axial loading
- the web splice resists the vertical shear and torsional moment induced by the eccentricity of this loading on the bolt groups on each side of the joint
- the splice uses HSFG bolts to avoid producing bolt slip and consequent additional beam deflection.

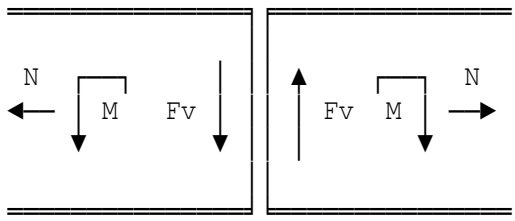

Design of splice plate subjected to an applied moment, shear force and axial load to BS5950.

All loads and moment are factored.

Shear force	Fv=390 kN
Bending moment	M=286 kNm
Axial force (+ve compression)	N=225 kN

533 x 210 x 92 UB.

Total number of bolts	n=16
Diameter of web bolts	bdw=20 mm
Bolt pitch	p=100 mm
Vertical edge distance	ed1=50 mm
Horizontal edge distance	ed2=50 mm
Distance between bolt centres	S1=100 mm
Distance between bolt centres	S2=90 mm
Thickness of web plate	twp=10 mm
Slip factor for preloaded bolts	mu=0.5
Coefficient for type of hole	Ks=1
Allowance for clearance btwn ends	cl=10 mm

WEB COVER PLATE SUMMARY - all dimensions in diagram are in mm

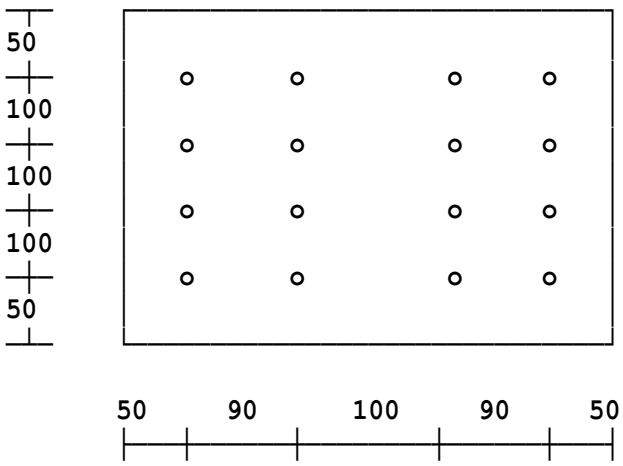

Web cover plates	**2No/380 mm x 10 mm x 400 mm**
Number of bolts	**16**
Bolt diameter	**20 mm**
Bolt grade	**HSFG**
	General grade (8.8) to BS4395 Part 1
Nut grade	**10**

FLANGE SPLICE

Plate details

Thickness of flange plate	tcp=16 mm
Width of outer flange cover plate	Bfp=210 mm
Width of inner splice plate	Bif=95 mm
Projection of flange cover plate	P=250 mm

Bolt details

Bolt diameter in flange plate	bdf=24 mm
Bolt spacing (across the beam)	crs=140 mm
Total no. of bolts in cover plate	np=12
Pitch of bolts (along the beam)	pit=75 mm
Spacing of bolts across beams	spac=75 mm
Slip factor for preloaded bolts	mu=0.5
Coefficient for type of hole	Ks=1

Moment about y-y axis Myy=12 kNm

FLANGE COVER PLATE SUMMARY - all dimensions in diagram are in mm

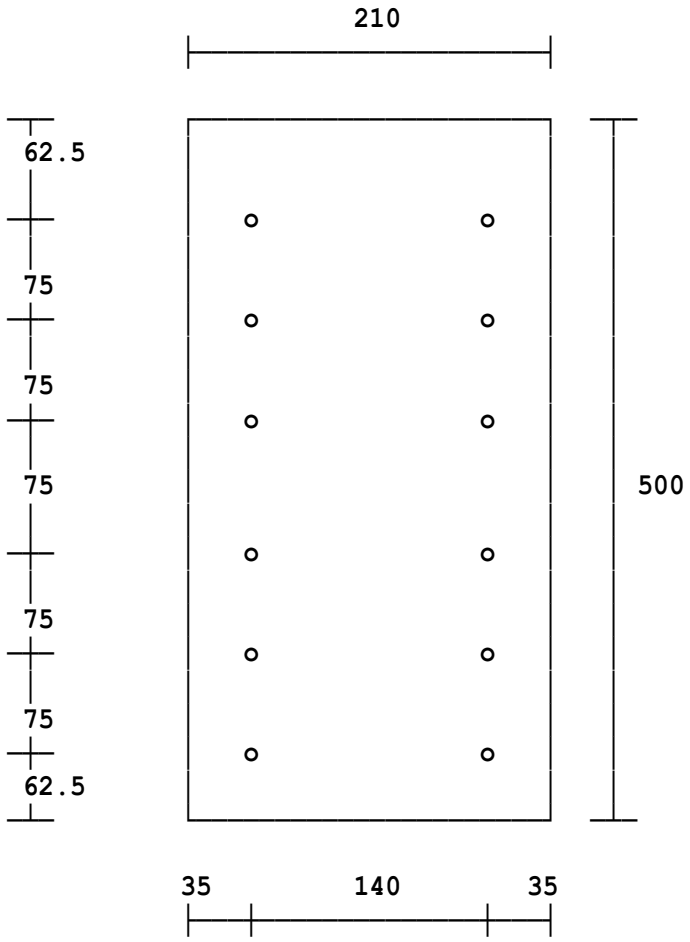

Flange cover plates:

outer (as illustrated)	**2No/210 mm x 16 mm x 500 mm**
inner (not illustrated)	**4No/95 mm x 16 mm x 500 mm**
	same holing arrangement
Number of bolts	**12 per flange cover plate**
Bolt diameter	**24 mm**
Bolt grade	**HSFG**
	General grade (8.8) to BS4395 Part 1
Nut grade	**10**

Location: Ex1 - Non slip connection

Bolted beam splice

Design assumptions:

- the flange plates resist a proportion of the BM and axial load
- the web plates resist all the vertical shear, the moment due to the eccentricity of the bolt group resisting shear from the centreline of the splice and a proportion of the bending moment
- the splice uses preloaded HSFG bolts to avoid producing bolt slip and consequent additional beam deflection.

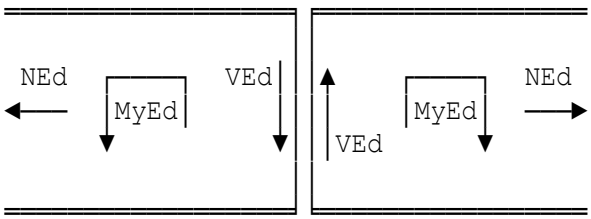

Design of splice plate subjected to an applied moment, shear force and axial load to EC3 Parts 1-1, 1-5, 1-8 and SCI publication P398. Loads and moment are factored.

Shear force	VEd=150 kN
Bending moment	MyEd=200 kNm
Axial force (+ve compression)	NEd=150 kN

Grade details

457 x 191 x 67 UKB

Total number of bolts	nb=12
Diameter of web bolts	dbw=20 mm
Bolt pitch	p1=120 mm
Vertical edge distance	e1=66 mm
Horizontal edge distance	e2=50 mm
Thickness of web plate	twp=10 mm
Distance between bolt centres	p5=140 mm
Distance between bolt centres	p3=85 mm

WEB COVER PLATE SUMMARY - all dimensions in diagram are in mm

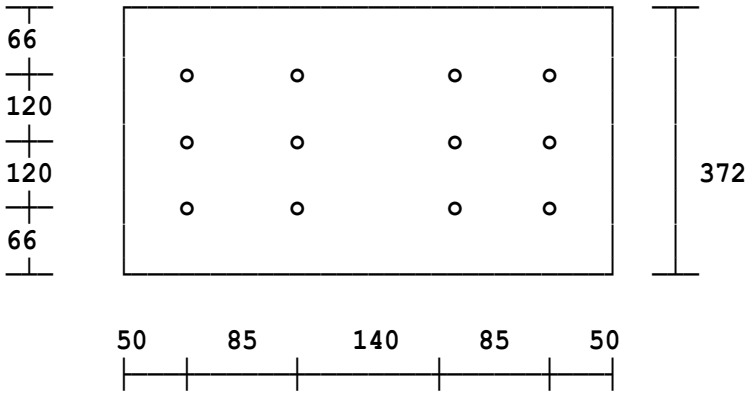

Web cover plates	**2No/410 mm x 10 mm x 372 mm**
Number of bolts	**12**
Bolt diameter	**20 mm**
Bolt grade	**Preloaded HSFG bolts**
	General grade (8.8) with grade 10 nuts

FLANGE SPLICE

Plate details

Thickness of flange plate	tfp=12 mm
Width of flange cover plate	bfp=180 mm
Projection of flange cover plate	P=280 mm

Bolt details

Bolt spacing (across the beam)	p3fp=80 mm
Total no. of bolts in cover plate	np=12
Pitch of bolts (along the beam)	p1fp=80 mm
Spacing of bolts across beams	spac=120 mm
Edge distance	e2fp=(bfp-p3fp)/2=50 mm

FLANGE COVER PLATE SUMMARY - all dimensions in diagram are in mm

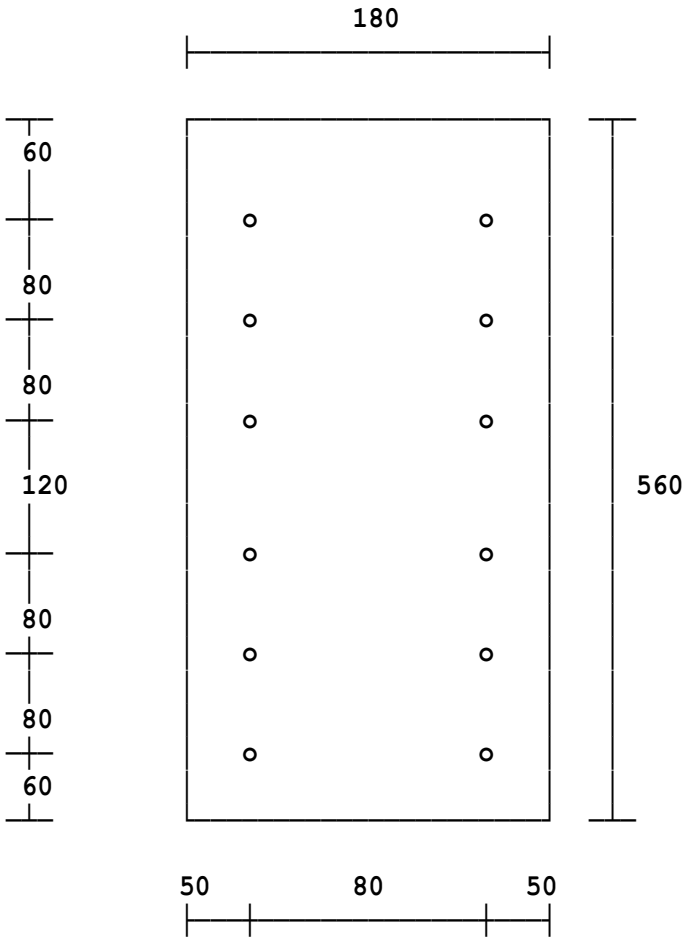

Flange cover plates	**2No/180 mm x 12 mm x 560 mm**
Number of bolts	**12 per flange cover plate**
Bolt diameter	**20 mm**
Bolt grade	**Preloaded HSFG bolts**
	General grade (8.8) with grade 10 nuts

Location: Ex2 - Moment connections example

Bolted beam splice

Design assumptions:

- the flange plates resist a proportion of the BM and axial load
- the web plates resist all the vertical shear, the moment due to the eccentricity of the bolt group resisting shear from the centreline of the splice and a proportion of the bending moment
- the splice uses preloaded HSFG bolts to avoid producing bolt slip and consequent additional beam deflection.

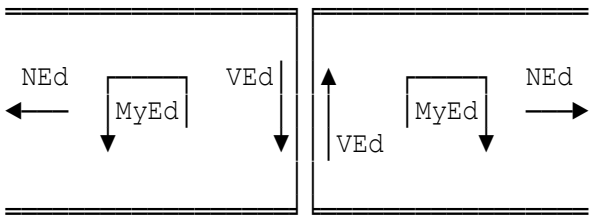

Design of splice plate subjected to an applied moment, shear force and axial load to EC3 Parts 1-1, 1-5, 1-8 and SCI publication P398. Loads and moment are factored.

Shear force	VEd=150 kN
Bending moment	MyEd=100 kNm
Axial force (+ve compression)	NEd=150 kN

Grade details

457 x 191 x 67 UKB

Total number of bolts	nb=8
Diameter of web bolts	dbw=20 mm
Bolt pitch	p1=90 mm
Vertical edge distance	e1=65 mm
Horizontal edge distance	e2=50 mm
Thickness of web plate	twp=10 mm
Distance between bolt centres	p3=100 mm

WEB COVER PLATE SUMMARY - all dimensions in diagram are in mm

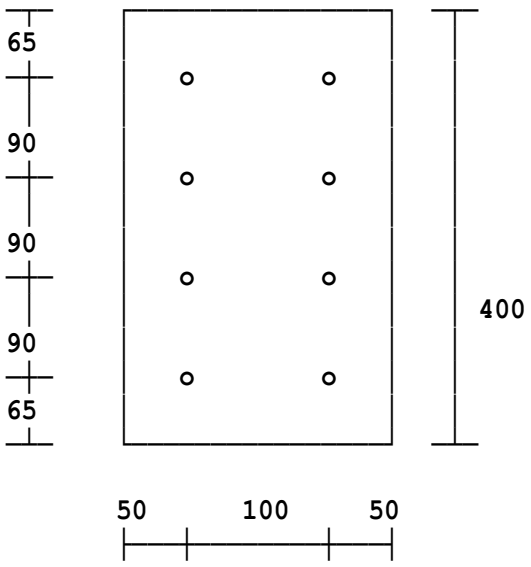

Web cover plates	**2No/200 mm x 10 mm x 400 mm**
Number of bolts	**8**
Bolt diameter	**20 mm**
Bolt grade	**Preloaded HSFG bolts**
	General grade (8.8) with grade 10 nuts

FLANGE SPLICE

Plate details

Thickness of flange plate	tfp=12 mm
Width of flange cover plate	bfp=180 mm
Projection of flange cover plate	P=360 mm

Bolt details

Bolt spacing (across the beam)	p3fp=90 mm
Total no. of bolts in cover plate	np=16
Pitch of bolts (along the beam)	p1fp=75 mm
Spacing of bolts across beams	spac=150 mm
Edge distance	e2fp=(bfp-p3fp)/2=45 mm
Moment about z-z axis	Mzz=10 kNm

FLANGE COVER PLATE SUMMARY - all dimensions in diagram are in mm

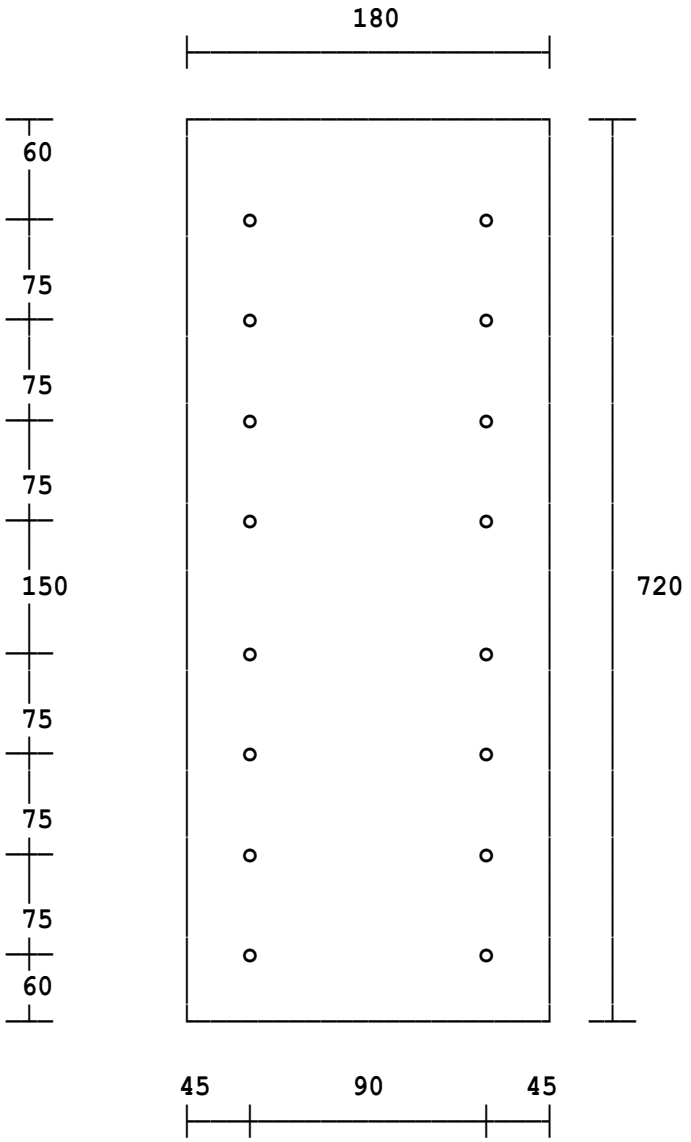

Flange cover plates	**2No/180 mm x 12 mm x 720 mm**
Number of bolts	**16 per flange cover plate**
Bolt diameter	**20 mm**
Bolt grade	**Preloaded HSFG bolts**
	General grade (8.8) with grade 10 nuts

Location: Ex3 - Web cleat 4 rows of bolts, double flange plates

Bolted beam splice

Design assumptions:

- the flange plates resist a proportion of the BM and axial load
- the web plates resist all the vertical shear, the moment due to the eccentricity of the bolt group resisting shear from the centreline of the splice and a proportion of the bending moment
- the splice uses preloaded HSFG bolts to avoid producing bolt slip and consequent additional beam deflection.

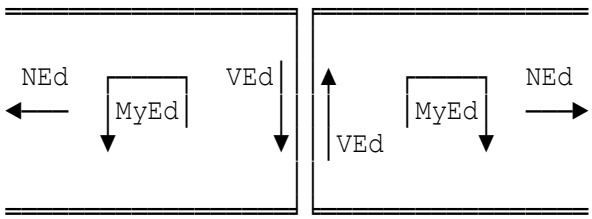

Design of splice plate subjected to an applied moment, shear force and axial load to EC3 Parts 1-1, 1-5, 1-8 and SCI publication P398. Loads and moment are factored.

Shear force	VEd=390 kN
Bending moment	MyEd=286 kNm
Axial force (+ve compression)	NEd=225 kN

Grade details

533 x 210 x 92 UKB

Total number of bolts	nb=16
Diameter of web bolts	dbw=20 mm
Bolt pitch	p1=100 mm
Vertical edge distance	e1=65 mm
Horizontal edge distance	e2=50 mm
Thickness of web plate	twp=12 mm
Distance between bolt centres	p5=100 mm
Distance between bolt centres	p3=90 mm

WEB COVER PLATE SUMMARY - all dimensions in diagram are in mm

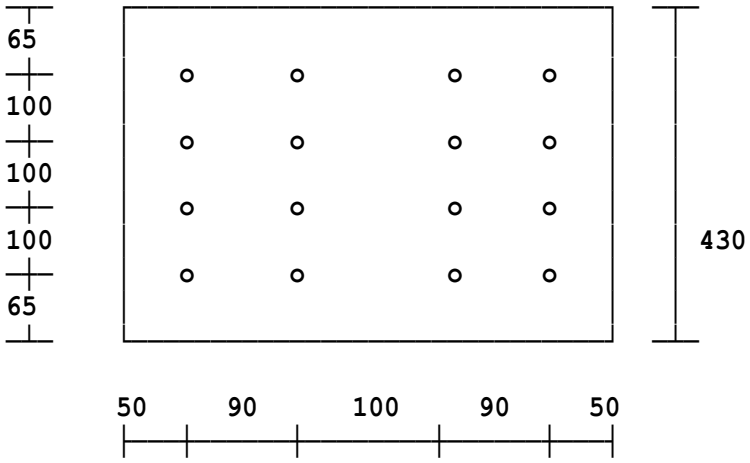

Web cover plates	**2No/380 mm x 12 mm x 430 mm**
Number of bolts	**16**
Bolt diameter	**20 mm**
Bolt grade	**Preloaded HSFG bolts**
	General grade (8.8) with grade 10 nuts

FLANGE SPLICE

Plate details

Thickness of flange plate	tfp=16 mm
Width of outer flange cover plate	bfp=210 mm
Width of inner splice plate	bif=95 mm
Projection of flange cover plate	P=270 mm

Bolt details

Bolt diameter in flange plate	dbfp=24 mm
Bolt spacing (across the beam)	p3fp=140 mm
Total no. of bolts in cover plate	np=12
Pitch of bolts (along the beam)	p1fp=75 mm
Spacing of bolts across beams	spac=75 mm
Edge distance	e2fp=(bfp-p3fp)/2=35 mm
Moment about z-z axis	Mzz=12 kNm

FLANGE COVER PLATE SUMMARY - all dimensions in diagram are in mm

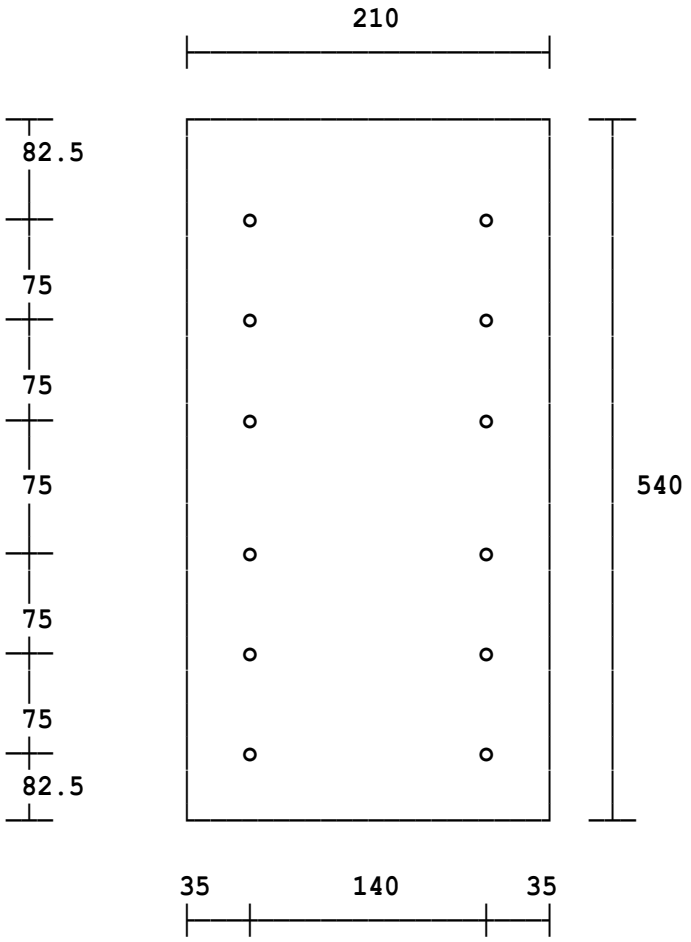

Flange cover plates:	
outer (as illustrated)	**2No/210 mm x 16 mm x 540 mm**
inner (not illustrated)	**4No/95 mm x 16 mm x 540 mm**
	same holing arrangement
Number of bolts	**12 per flange cover plate**
Bolt diameter	**24 mm**
Bolt grade	**Preloaded HSFG bolts**
	General grade (8.8) with grade 10 nuts

Location: Ex1 - X joint subject to moment

Calculations are in accordance with BS5950 and ENV 1993-1-1-ANNEX K using the procedure of Section 5.4 of 'Design of SHS Welded Joints' published by British Steel Tubes & Pipes.

Steel section properties

Chord details:
305 x 305 x 118 UC.

Brace 1 details:
120 x 120 x 10 SHS - Hot finished.
Properties (cm): A=42.9 rx=4.46 Zx=142 Sx=175 Ix=852 J=1380 C=206

Brace 2 details:
100 x 100 x 8 SHS - Hot finished.
Properties (cm): A=28.8 rx=3.73 Zx=79.9 Sx=98.2 Ix=400 J=646 C=116

Geometry

Angle of brace θ1	theta1=45°
Angle of brace θ2	theta2=45°

Factored axial load details - compression is negative

Chord (axial load 1)	Fc1=-1200 kN
Chord (axial load 2)	Fc2=-1200 kN
Brace member 1 (axial load)	Fb1=-450 kN
Brace member 1 (in-plane moment)	Mi1=20 kNm
Brace member 2 (axial load)	Fb2=-350 kN
Brace member 2 (in-plane moment)	Mi2=10 kNm

CAPACITY SUMMARY

Brace member 1:	
Applied brace 1 axial loading	**Fb1 -450 kN**
Load within capacity	**Pass**
Load capacities:	
Chord web yielding	**N1 1986 kN**
Bracing effective width	**NE1 1204 kN**
In-plane moment	**Mi1 20 kNm**
Moment within capacity	**Pass**
In-plane moment capacities:	
Chord web yielding	**Mic1 77.2 kNm**
Bracing effective width	**Mib1 66.2 kNm**

The load and moment interaction formula for universal section chord joints is not specified in the 'Design of SHS Welded Joints' publication. The formula below has been assumed based on the interaction equation for RHS chord joints.

$$\frac{Fb1}{Ncrit} + \frac{Mi1}{Mc1} \leq 1.0$$

Critical load capacity	Ncrit=1204 kN
Critical moment capacity	Mc1=66.2 kNm
Absolute value of brace force	FB1= -Fb1=450 kN
Interaction	unity=FB1/Ncrit+Mi1/Mc1
	=0.676

The interaction formula is satisfied, joint arrangement suitable.

Brace member 2:

Applied brace 2 axial loading	Fb2 -350 kN
Load within capacity	Pass
Load capacities:	
Chord web yielding	N2 1820 kN
Bracing effective width	NE2 963 kN
In-plane moment	Mi2 10 kNm
Moment within capacity	Pass
In-plane moment capacities:	
Chord web yielding	Mic2 59.2 kNm
Bracing effective width	Mib2 44.3 kNm

$$\frac{Fb2}{Ncrit2} + \frac{Mi2}{Mc2} \leq 1.0$$

Critical load capacity	Ncrit2=963 kN
Critical moment capacity	Mc2=44.3 kNm
Absolute value of brace force	FB2= -Fb2=350 kN
Interaction	unity=FB2/Ncrit2+Mi2/Mc2
	=0.589

The interaction formula is satisfied, joint arrangement suitable.

Location: Ex2 - K gap joint with CHS braces

Calculations are in accordance with BS5950 and ENV 1993-1-1-ANNEX K using the procedure of Section 5.4 of 'Design of SHS Welded Joints' published by British Steel Tubes & Pipes.

Steel section properties

Chord details:
254 x 254 x 107 UC.

Brace 1 details:
168 dia x 8 thick CHS - Hot finished.
Properties (cm): A=40.2 r=5.66 Z=154 S=205 I=1290

Brace 2 details:
140 dia x 6.3 thick CHS - Hot finished.
Properties (cm): A=26.5 r=4.73 Z=84.7 S=113 I=593

Geometry

Angle of brace θ1	theta1=45°
Angle of brace θ2	theta2=45°
Gap between bracing elements	g=80 mm

Factored axial load details - compression is negative

Chord (axial load 1)	Fc1=-1200 kN
Chord (axial load 2)	Fc2=-1200 kN
Brace member 1 (axial load)	Fb1=-650 kN
Brace member 2 (axial load)	Fb2=450 kN

CAPACITY SUMMARY

Brace member 1:

Applied brace 1 axial loading	**Fb1 -650 kN**
Load within capacity	**Pass**

Load capacities brace 1:

Chord web yielding capacity	**N1 1707 kN**
Chord shear capacity	**NS1 1063 kN**
Bracing effective width	**NW1 793 kN**

Brace member 2:

Applied brace 2 loading	**Fb2 450 kN**
Load within capacity	**Pass**

Load capacities:

Chord web yielding capacity	**N2 1707 kN**
Chord shear capacity	**NS2 1063 kN**
Bracing effective width	**NW2 624 kN**

Location: Ex3 - K overlap joint with RHS braces

Calculations are in accordance with BS5950 and ENV 1993-1-1-ANNEX K using the procedure of Section 5.4 of 'Design of SHS Welded Joints' published by British Steel Tubes & Pipes.

Steel section properties

Chord details:
203 x 203 x 71 UC.

Brace 1 details:
100 x 200 x 8 RHS - Hot finished.
Properties (cm): A=44.8 rx=4.06 Zx=148 Sx=172 Ix=739
J=1800 C=251 Zy=223 Sy=282 Iy=2230 ry=7.06

Brace 2 details:
100 x 150 x 6.3 RHS - Hot finished.
Properties (cm): A=29.5 rx=4.01 Zx=94.8 Sx=110 Ix=474
J=986 C=153 Zy=120 Sy=147 Iy=898 ry=5.52

Geometry

Angle of brace θ1	theta1=60°
Angle of brace θ2	theta2=60°
Gap between bracing elements	g=-50 mm

Factored axial load details - compression is negative

Chord (axial load 1)	Fc1=-500 kN
Chord (axial load 2)	Fc2=-500 kN
Brace member 1 (axial load)	Fb1=-450 kN
Brace member 2 (axial load)	Fb2=300 kN

CAPACITY SUMMARY

Brace member 1:

Applied brace 1 axial loading	**Fb1 -450 kN**
Bracing effective width	**NO1 1264 kN**
Load within capacity	**Pass**

Brace member 2:

Applied brace loading (2)	**Fb2 300 kN**
Bracing effective width	**NO2 833 kN**
Load within capacity	**Pass**

Location: Ex1 - X joint subject to moment

Calculations are in accordance with EC3 Part 1-1 and TATA Steel publication entitled 'Design of Welded Joints'.

Steel section properties

Chord details:
305 x 305 x 118 UKC

Brace 1 details:
120 x 120 x 10 SHS - Hot finished.
Properties (cm): A=42.9 iy=4.46 Wely=142 Wply=175 Iy=852 It=1380
Wt=206

Brace 2 details:
100 x 100 x 8 SHS - Hot finished.
Properties (cm): A=28.8 iy=3.73 Wely=79.9 Wply=98.2 Iy=400 It=646
Wt=116

Geometry

Angle of brace θ1	theta1=45°
Angle of brace θ2	theta2=45°

Factored axial load details - compression is negative

Chord (axial load 1)	Nc1=-1200 kN
Chord (axial load 2)	Nc2=-1200 kN
Brace member 1 (axial load)	Nb1=-450 kN
Brace member 1 (in-plane moment)	Mi1=20 kNm
Brace member 2 (axial load)	Nb2=-350 kN
Brace member 2 (in-plane moment)	Mi2=10 kNm

DESIGN RESISTANCE SUMMARY

Brace member 1:		
Applied brace 1 axial loading	**Nb1**	**-450 kN**
Load within resistance	**Pass**	
Load resistances:		
Chord web yielding	**N1**	**1986 kN**
Bracing effective width	**NE1**	**1204 kN**
In-plane moment	**Mi1**	**20 kNm**
Moment within resistance	**Pass**	
In-plane moment resistances:		
Chord web failure	**Mic1**	**77.2 kNm**
Bracing effective width	**Mib1**	**66.2 kNm**

The load and moment interaction formula for universal section chord joints is not specified in the 'Design of Welded Joints' publication. The formula below has been assumed based on the interaction equation for RHS chord joints.

$$\frac{Nb1}{Ncrit1} + \frac{Mi1}{Mc1} \leq 1.0$$

Critical load resistance	Ncrit1=1204 kN
Critical moment resistance	Mc1=66.2 kNm
Interaction	unity=ABS(Nb1)/Ncrit1+Mi1/Mc1 =0.676

The interaction formula is satisfied, joint arrangement suitable.

Brace member 2:

Applied brace 2 axial loading	Nb2 -350 kN
Load within resistance	Pass
Load resistances:	
Chord web yielding	N2 1820 kN
Bracing effective width	NE2 963 kN
In-plane moment	Mi2 10 kNm
Moment within resistance	Pass
In-plane moment resistances:	
Chord web failure	Mic2 59.2 kNm
Bracing effective width	Mib2 44.3 kNm

$$\frac{Nb2}{Ncrit2} + \frac{Mi2}{Mc2} \leq 1.0$$

Critical load resistance	Ncrit2=963 kN
Critical moment resistance	Mc2=44.3 kNm
Interaction	unity=ABS(Nb2)/Ncrit2+Mi2/Mc2 =0.589

The interaction formula is satisfied, joint arrangement suitable.

Location: Ex2 - T & Y joint

Calculations are in accordance with EC3 Part 1-1 and TATA Steel publication entitled 'Design of Welded Joints'.

Steel section properties

Chord details:
305 x 305 x 118 UKC

Brace 1 details:
120 x 120 x 10 SHS - Hot finished.
Properties (cm): A=42.9 iy=4.46 Wely=142 Wply=175 Iy=852 It=1380
Wt=206

Geometry

Angle of brace θ1 theta1=90°

Factored axial load details - compression is negative

Chord (axial load 1)	Nc1=-600 kN
Chord (axial load 2)	Nc2=-600 kN
Brace member (axial load)	Nb1=-450 kN
Brace member (in-plane moment)	Mi1=20 kNm

DESIGN RESISTANCE SUMMARY

Brace member 1:	
Applied brace 1 axial loading	**Nb1 -450 kN**
Load within resistance	**Pass**
Load resistances:	
Chord web yielding	**N1 1199 kN**
Bracing effective width	**NE1 1204 kN**
In-plane moment	**Mi1 20 kNm**
Moment within resistance	**Pass**
In-plane moment resistances:	
Chord web failure	**Mic1 65.9 kNm**
Bracing effective width	**Mib1 66.2 kNm**

The load and moment interaction formula for universal section chord joints is not specified in the 'Design of Welded Joints' publication. The formula below has been assumed based on the interaction equation for RHS chord joints.

$$\frac{Nb1}{Ncrit1} + \frac{Mi1}{Mc1} \leq 1.0$$

Critical load resistance	**Ncrit1=1199 kN**
Critical moment resistance	**Mc1=65.9 kNm**
Interaction	**unity=ABS(Nb1)/Ncrit1+Mi1/Mc1 =0.679**

The interaction formula is satisfied, joint arrangement suitable.

Location: Ex3 - K gap joint with CHS braces

Calculations are in accordance with EC3 Part 1-1 and TATA Steel publication entitled 'Design of Welded Joints'.

Steel section properties

Chord details:
254 x 254 x 107 UKC

Brace 1 details:
168 dia x 8 thick CHS - Hot finished.
Properties (cm): A=40.2 iy=5.66 Wely=154 Wply=205 Iy=1290
It=2580

Brace 2 details:
140 dia x 6.3 thick CHS - Hot finished.
Properties (cm): A=26.5 iy=4.73 Wely=84.7 Wply=113 Iy=593
It=1185

Geometry

Angle of brace θ1	theta1=45°
Angle of brace θ2	theta2=45°
Gap between bracing elements	g=80 mm

Factored axial load details - compression is negative

Chord (axial load 1)	Nc1=-1200 kN
Chord (axial load 2)	Nc2=-1200 kN
Brace member 1 (axial load)	Nb1=-650 kN
Brace member 2 (axial load)	Nb2=450 kN

DESIGN RESISTANCE SUMMARY

Brace member 1:

Applied brace 1 axial loading	**Nb1 -650 kN**
Load within resistance	**Pass**

Load resistances brace 1:

Chord web yielding resistance	**N1 1707 kN**
Chord shear resistance	**NS1 1063 kN**
Bracing effective width	**NW1 793 kN**

Brace member 2:

Applied brace 2 loading	**Nb2 450 kN**
Load within resistance	**Pass**

Load resistances:

Chord web yielding resistance	**N2 1707 kN**
Chord shear resistance	**NS2 1063 kN**
Bracing effective width	**NW2 624 kN**

Copyright 1986-2024 Fitzroy Systems Ltd.

Location: Ex4 - K overlap joint with RHS braces

Calculations are in accordance with EC3 Part 1-1 and TATA Steel publication entitled 'Design of Welded Joints'.

Steel section properties

Chord details:
203 x 203 x 71 UKC

Brace 1 details:
100 x 200 x 8 RHS - Hot finished.
Properties (cm): A=44.8 iz=7.06 Wely=148 Wply=172 Iy=739
It=1800 Wt=251 Welz=223 Wplz=282 Iz=2230 iy=4.06

Brace 2 details:
100 x 150 x 6.3 RHS - Hot finished.
Properties (cm): A=29.5 iz=5.52 Wely=94.8 Wply=110 Iy=474
It=986 Wt=153 Welz=120 Wplz=147 Iz=898 iy=4.01

Geometry

Angle of brace θ1	theta1=60°
Angle of brace θ2	theta2=60°
Gap between bracing elements	g=-50 mm

Factored axial load details - compression is negative

Chord (axial load 1)	Nc1=-500 kN
Chord (axial load 2)	Nc2=-500 kN
Brace member 1 (axial load)	Nb1=-450 kN
Brace member 2 (axial load)	Nb2=300 kN

DESIGN RESISTANCE SUMMARY

Brace member 1:

Applied brace 1 axial loading	**Nb1 -450 kN**
Bracing effective width	**NO1 1264 kN**
Load within resistance	**Pass**

Brace member 2:

Applied brace loading (2)	**Nb2 300 kN**
Bracing effective width	**NO2 833 kN**
Load within resistance	**Pass**

Location: Ex1 - using 4 bolts in haunch

Portal frame apex connection (haunched)

The calculations are in accordance with BS5950-1:2000 and follow the procedure given in the SCI publication entitled 'Joints in Steel Construction Moment Connections'. The factored moment and forces at the end of the rafter act on a cross-section normal to the axis of the basic rafter (unhaunched) member.

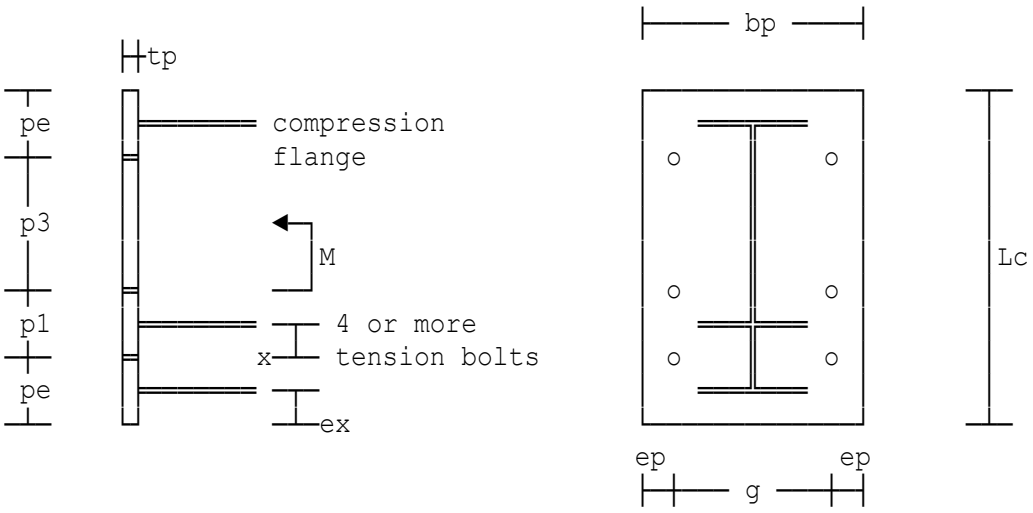

Factored moment	Ma=387 kNm
Factored shear force	Va=256 kN
Axial force (+ve compression)	Na=150 kN
Pitch of rafter (in degrees)	Theta=10

Grade details

Rafter details - parent section

457 x 191 x 74 UB.

Haunch plate details

Flange width	Bh=200 mm
Flange thickness	Th=15 mm
Web thickness	th=10 mm

Bolt details

Diameter of bolts	bd=24 mm

End plate details

Thickness of plate	tp=20 mm
Number of bolts in haunch	bnf=4
Total number of bolts	bn=12
Number of shear bolts	ns=4
Distance to first row of bolts	pe=100 mm
Distance between tension bolts	p1=130 mm
Distance to haunch bolts	x=70 mm
Pitch of bolts	p2=90 mm
Distance to flange from edge(s)	ex=15 mm
Bolt cross-centres	g=90 mm
Width of end plate	bp=200 mm
Assumed web fillet weld size	sww=8 mm
Assumed flange fillet weld size	swf=12 mm

SUMMARY OF BOLT POTENTIAL RESISTANCES

Top row of bolts	Pr1=363.73 kN
Row 2	Pr2=284.41 kN
Row 3	Pr3=363.55 kN
Row 4	Pr4=281.58 kN
Selected fillet weld size	swt=12 mm
Selected fillet weld size	sfw=8 mm

REVERSED MOMENT CONDITION

Factored moment	Mr=123 kNm
Factored shear force	Vr=103 kN
Axial force (+ve compression)	Nr=45 kN

CONNECTION SUMMARY - all dimensions in diagram are in mm

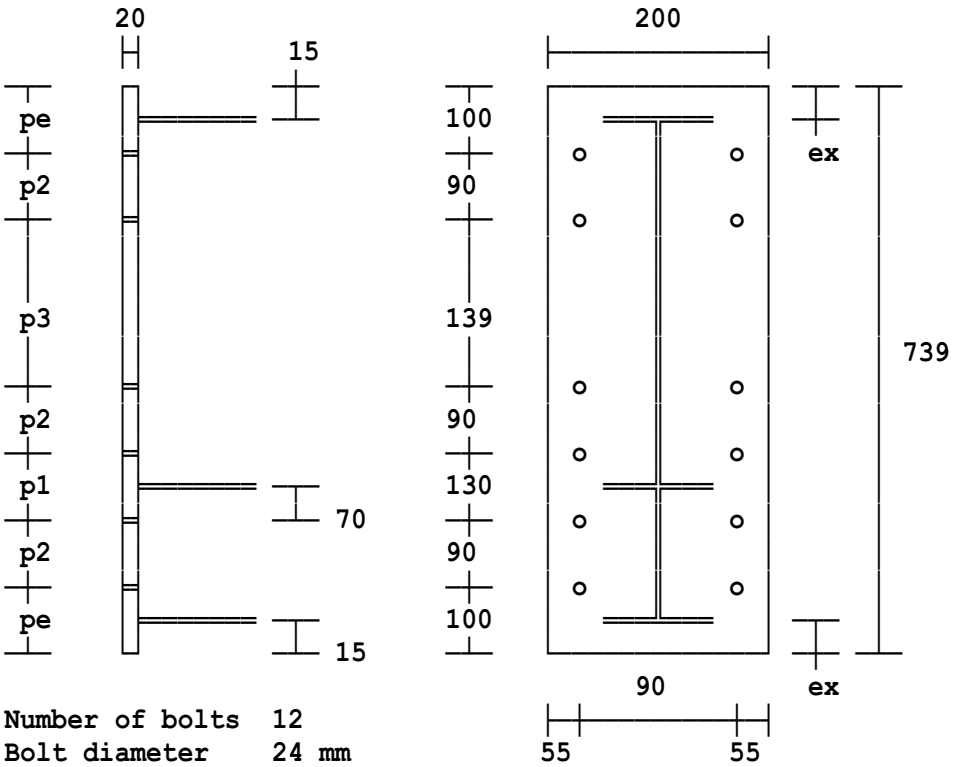

Number of bolts	**12**	
Bolt diameter	**24 mm**	
Bolt grade	**8.8**	
Welds	**Tension flange fillet weld**	**12 mm**
	Web fillet weld	**8 mm**
	Compression flange fillet weld	**12 mm**
Beam / Rafter section	**457 x 191 x 74 UB**	
Haunch Flange plate	**200 mm x 15 mm**	
Web plate	**230 mm x 10 mm**	
	Grade S 275	

Location: Ex2 - using 2 bolts in haunch

Portal frame apex connection (haunched)

The calculations are in accordance with BS5950-1:2000 and follow the procedure given in the SCI publication entitled 'Joints in Steel Construction Moment Connections'. The factored moment and forces at the end of the rafter act on a cross-section normal to the axis of the basic rafter (unhaunched) member.

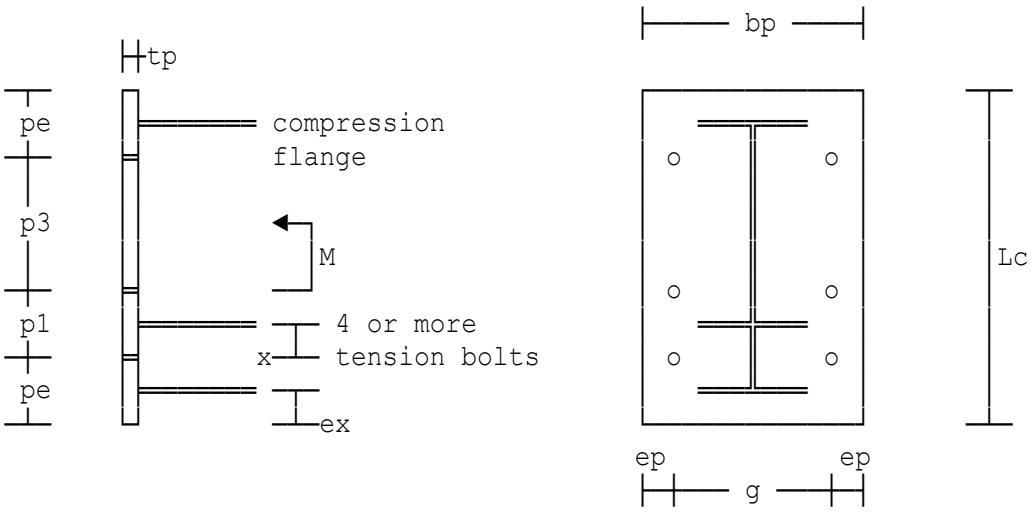

Factored moment	Ma=283 kNm
Factored shear force	Va=150 kN
Axial force (+ve compression)	Na=110 kN
Pitch of rafter (in degrees)	Theta=13

Grade details

Rafter details - parent section

406 x 178 x 60 UB.

Haunch plate details

Flange width	Bh=200 mm
Flange thickness	Th=15 mm
Web thickness	th=10 mm

Bolt details

Diameter of bolts	bd=24 mm

End plate details

Thickness of plate	tp=20 mm
Number of bolts in haunch	bnf=2
Total number of bolts	bn=8
Number of shear bolts	ns=2
Distance to first row of bolts	pe=100 mm
Distance between tension bolts	p1=130 mm
Distance to haunch bolts	x=70 mm
Pitch of bolts	p2=90 mm
Distance to flange from edge(s)	ex=15 mm
Bolt cross-centres	g=90 mm
Width of end plate	bp=200 mm
Assumed web fillet weld size	sww=8 mm
Assumed flange fillet weld size	swf=12 mm

SUMMARY OF BOLT POTENTIAL RESISTANCES

Top row of bolts	Pr1=367.65 kN
Row 2	Pr2=362.14 kN
Row 3	Pr3=280.32 kN
Selected fillet weld size	swt=13 mm
Selected fillet weld size	sfw=8 mm

CONNECTION SUMMARY - all dimensions in diagram are in mm

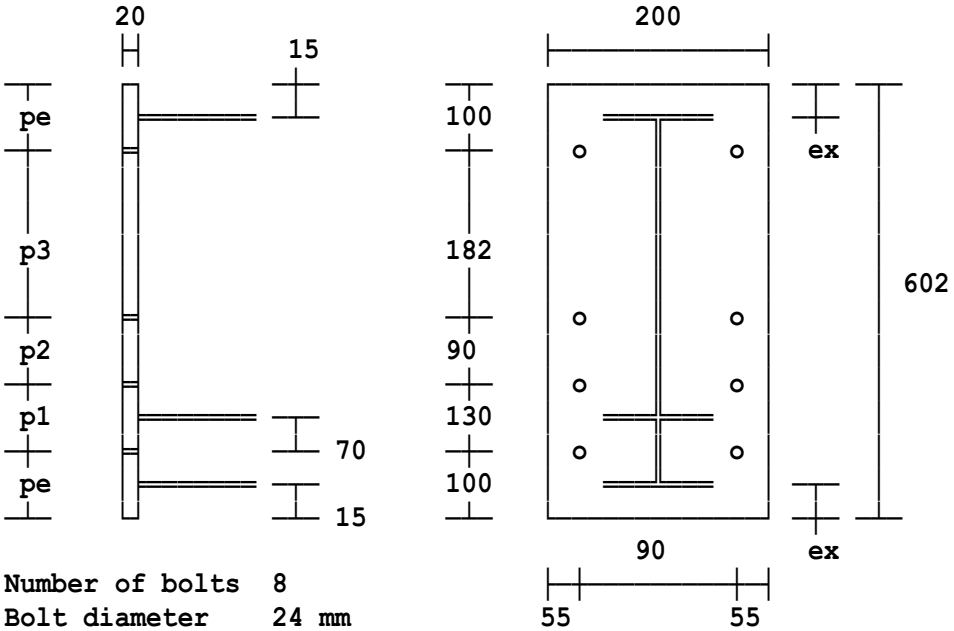

Number of bolts	**8**	
Bolt diameter	**24 mm**	
Bolt grade	**8.8**	
Welds	**Tension flange fillet weld**	**13 mm**
	Web fillet weld	**8 mm**
	Compression flange fillet weld	**12 mm**
Beam / Rafter section	**406 x 178 x 60 UB**	
Haunch Flange plate	**200 mm x 15 mm**	
Web plate	**140 mm x 10 mm**	
	Grade S 275	

Location: Ex1 - using 4 bolts in haunch

Portal frame apex connection (haunched)

Calculations are in accordance with EC3 Parts 1-1, 1-5, 1-8 and follow the procedure given in the SCI publication P398 entitled 'Joints in Steel Construction Moment-Resisting Joints to EC3'. The factored moment and forces at the end of the rafter act on a cross-section normal to the axis of the basic rafter (unhaunched) member.

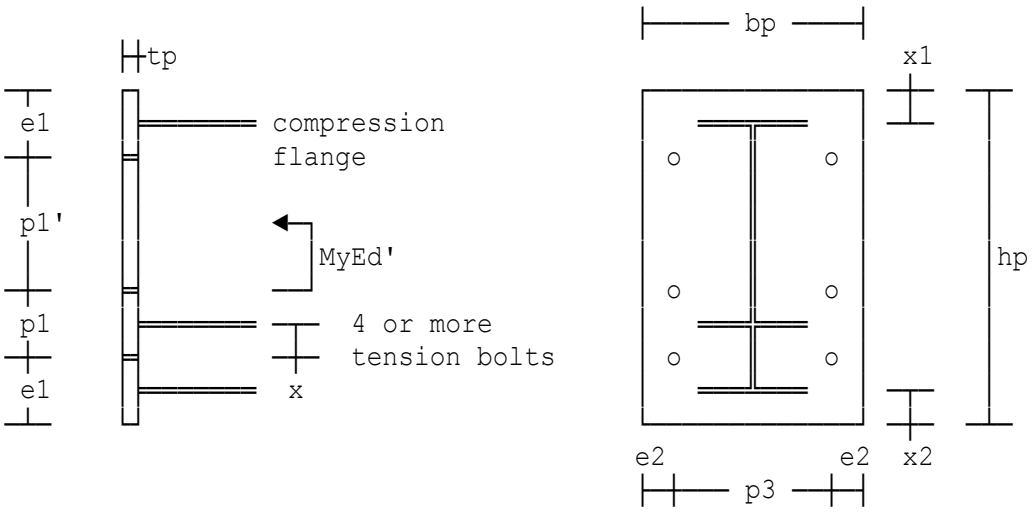

Factored moment	MyEd'=387 kNm
Factored shear force	VEd'=256 kN
Axial force (+ve compression)	NEd'=150 kN
Pitch of rafter	Theta=10°

Grade details

Rafter section properties details - parent section

457 x 191 x 74 UKB

Haunch plate details

Flange width	bh=200 mm
Flange thickness	tfh=15 mm
Web thickness	twh=10 mm

Bolt details

Diameter of bolts	db=24 mm
Tensile resistance (EC3 Part 1-8)	FtRd=k2*fub*At/(gamM2*10^3)=203.33 kN

End plate details

Thickness of plate	tp=20 mm
Number of bolts in haunch	bnf=4
Total number of bolts	bn=12
Number of shear bolts	ns=4
Distance to first row of bolts	e1=100 mm
Distance between tension bolts	p1=130 mm
Distance to haunch bolts	x=70 mm
Pitch of bolts	p2=90 mm
Bolt cross-centres	p3=90 mm
Width of end plate	bp=200 mm
Assumed web fillet weld size	sww=8 mm
Assumed flange fillet weld size	swf=12 mm

SUMMARY OF BOLT POTENTIAL RESISTANCES

Top row of bolts	Pr1=368.34 kN
Row 2	Pr2=292.48 kN
Row 3	Pr3=365.92 kN
Row 4	Pr4=296 kN
Selected fillet weld size	swt=12 mm
Selected fillet weld size	sfw=8 mm

REVERSED MOMENT CONDITION

Factored moment	MrEd=123 kNm
Factored shear force	VrEd=103 kN
Axial force (+ve compression)	NrEd=45 kN

CONNECTION SUMMARY - all dimensions in diagram are in mm

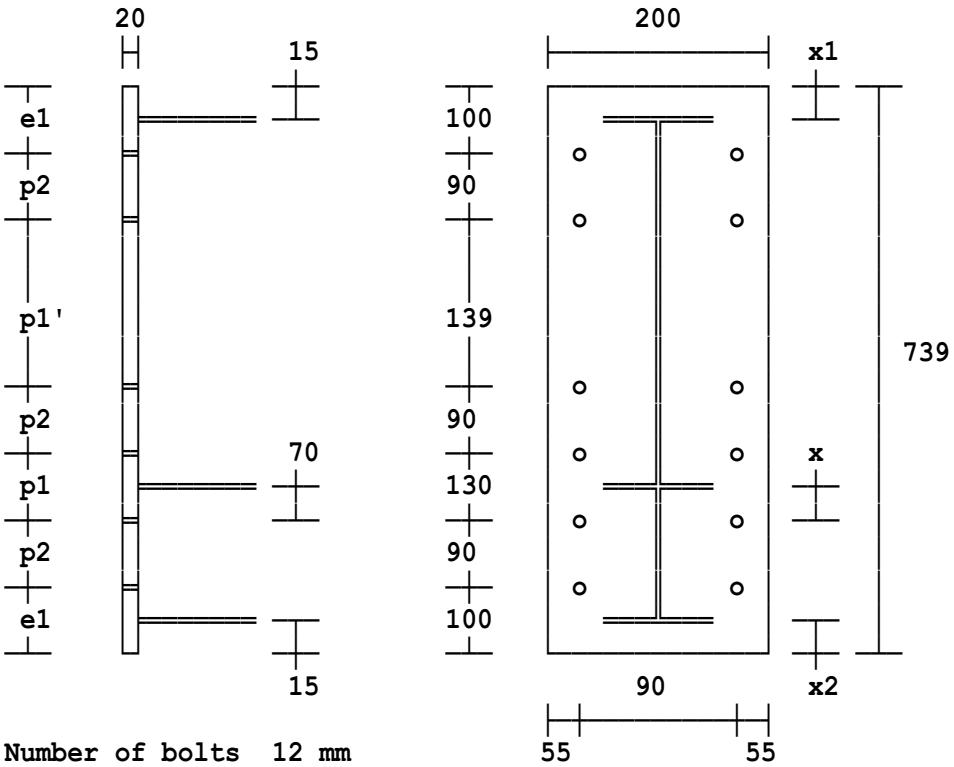

Number of bolts	**12 mm**	
Bolt diameter	**24 mm**	
Bolt grade	**8.8**	
Welds	**Tension flange fillet weld**	**12 mm**
	Web fillet weld	**8 mm**
	Compression flange fillet weld	**12 mm**
Beam / Rafter section	**457 x 191 x 74 UKB**	
Haunch Flange plate	**200 mm x 15 mm**	
Web plate	**230 mm x 10 mm**	
	Grade S 275	

Location: Ex2 - using 2 bolts in haunch

Portal frame apex connection (haunched)

Calculations are in accordance with EC3 Parts 1-1, 1-5, 1-8 and follow the procedure given in the SCI publication P398 entitled 'Joints in Steel Construction Moment-Resisting Joints to EC3'. The factored moment and forces at the end of the rafter act on a cross-section normal to the axis of the basic rafter (unhaunched) member.

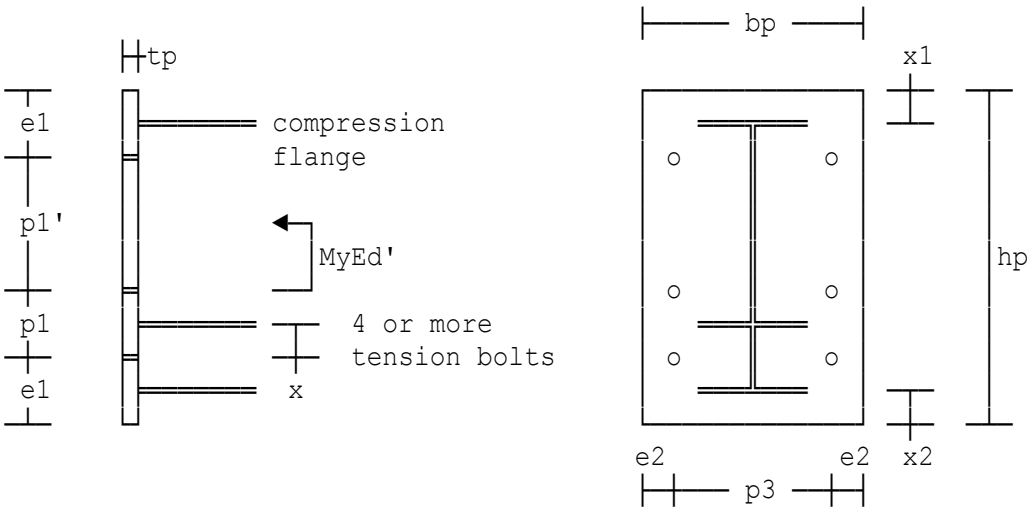

Factored moment	MyEd'=283 kNm
Factored shear force	VEd'=150 kN
Axial force (+ve compression)	NEd'=110 kN
Pitch of rafter	Theta=13°

Grade details

Rafter section properties details - parent section

406 x 178 x 60 UKB

Haunch plate details

Flange width	bh=200 mm
Flange thickness	tfh=15 mm
Web thickness	twh=10 mm

Bolt details

Diameter of bolts	db=24 mm
Tensile resistance (EC3 Part 1-8)	FtRd=k2*fub*At/(gamM2*10^3)=203.33 kN

End plate details

Thickness of plate	tp=20 mm
Number of bolts in haunch	bnf=2
Total number of bolts	bn=8
Number of shear bolts	ns=2
Distance to first row of bolts	e1=100 mm
Distance between tension bolts	p1=130 mm
Distance to haunch bolts	x=70 mm
Pitch of bolts	p2=90 mm
Bolt cross-centres	p3=90 mm
Width of end plate	bp=200 mm
Assumed web fillet weld size	sww=8 mm
Assumed flange fillet weld size	swf=12 mm

SUMMARY OF BOLT POTENTIAL RESISTANCES

Top row of bolts	Pr1=373.92 kN
Row 2	Pr2=363.29 kN
Row 3	Pr3=294.9 kN
Selected fillet weld size	swt=13 mm
Selected fillet weld size	sfw=8 mm

CONNECTION SUMMARY - all dimensions in diagram are in mm

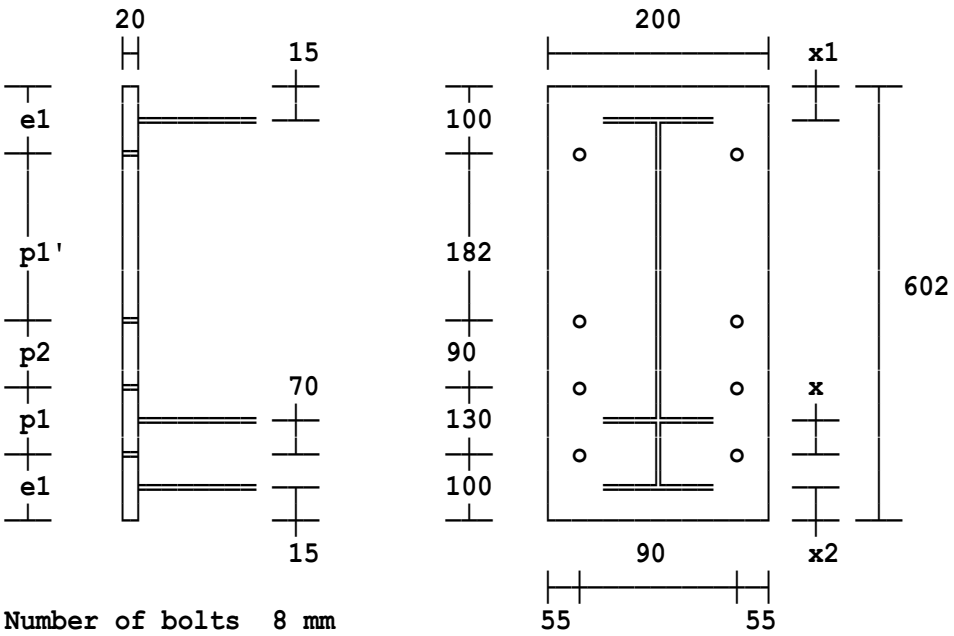

Number of bolts	**8 mm**	
Bolt diameter	**24 mm**	
Bolt grade	**8.8**	
Welds	**Tension flange fillet weld**	**13 mm**
	Web fillet weld	**8 mm**
	Compression flange fillet weld	**12 mm**
Beam / Rafter section	**406 x 178 x 60 UKB**	
Haunch Flange plate	**200 mm x 15 mm**	
Web plate	**140 mm x 10 mm**	
	Grade S 275	

Location: Ex1 - Cast-in plate design (2x3 Shear stud Array)

General design information

The calculations are in accordance with SCI publication P416 entitled ' The Design of Cast-In Plates ', EC2 Part 1-1, EC2 Part 1-8 and EC3 Part 1-1. Assume nominally pinned connections in simple construction for the building design. Clause references refer to EC2 Part 1-1.

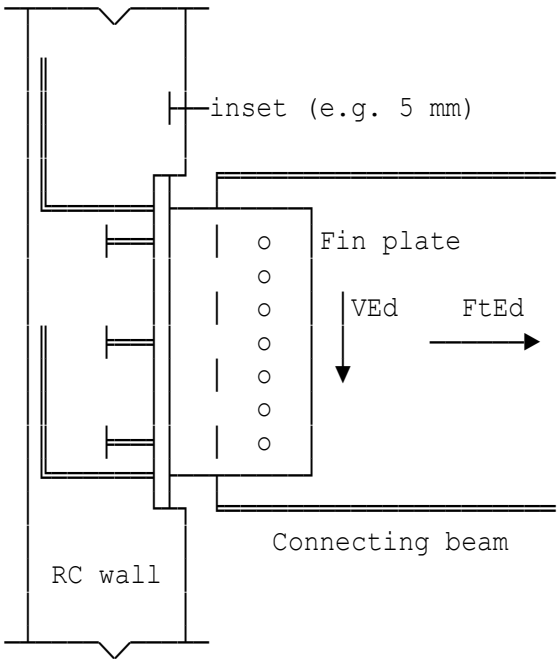

The shear stud resistance check will be as per EC4 Part 1-1. The shear force is transferred to the fin plate by bolts. The cast-in plate and its welded connection to the fin plate will resist the eccentricity moment due to the offset of the bolt group from the face of the plate. The standard arrangement for fin plates in the Green Book (i.e. SCI publication P358) is 10 mm thick fin plate using S275 material, with two 8 mm FW. This will eliminate the possibility of weld failure. The face of the cast-in plate is normally inset to allow for the sliding form.

Both the cast-in plate and fin plate will need site-applied corrosion protection system if corrosion protection of steelwork is specified. Furthermore parts of the connection plate (e.g. the fin plate) will also require fire protection as for the connecting beam.

Design shear (+ve value)	VEd=570 kN
Design tying force (+ve value)	FtEd=500 kN

Fin plate arrangement

No. of rows of M20 bolts	nbr=7
Fin plate depth	hfp=500 mm
Fin plate width	bfp=140 mm

Choose initial shear stud arrangement

Stud diameter	ds=25 mm
Stud height	hs=100 mm
Concrete strength	fck=40 N/mm²
Spacing of studs (vertically)	d1=125 mm
Spacing of studs (horizontally)	d2=130 mm
Edge distance (vertically)	e1=155 mm
Edge distance (horizontally)	e2=60 mm

Initial reinforcement arrangement

Reinforcement welded to cast-in plate for bending and tying resistance will need to be provided.

Bar diameter (top & bottom bars)	dr=25 mm
Total number of bars	nb=4
Tension resistance (bar group)	PtRd=TABLE 3 for nb=4, dr=25 =982 kN
Design tying force	FtEd=500 kN

As PtRd ≥ FtEd (982 kN ≥ 500 kN), the tension resistance exceeds the design tying force.

Confirm the shear stud arrangement - EC4 Part 1-1 Cl. 6.6.3.1

Governing group shear resistance	PRd=PRd1=848 kN

As PRd ≥ VEd (848 kN ≥ 570 kN), the shear resistance exceeds the design shear and hence studs provided are satisfactory.

Horizontal deviation	ecc=35 mm
Angle β (rotational deviation)	beta=5.71°
Maximum shear in corner stud	Vmax2=SQR((VEd/ns+V2)^2+V1^2)=116 kN
Shear resistance per stud	PRd1=PRd/ns=141 kN

As Vmax2 ≤ PRd1 (116 kN ≤ 141 kN), corner stud shear OK.

Reinforcement arrangement and bar size

(A) Eccentricity moment on the cast-in plate

Maximum eccentricity	ep=150 mm
Design moment due to eccentricity	Md=VEd*ep/1000=85.5 kNm

(B) Vertical lever arm for tension - compression couple

Design tension force	T=Md/l=202 kN
Design compression force	C=T2=202 kN

(C) Confirm the bar size

Top bar spacing (laterally)	bsp=155 mm

As T ≤ FtRd (202 kN ≤ 427 kN), bars provided are OK.
As FtEd' ≤ FtRd1 (147 kN ≤ 213 kN), maximum tensile force due to eccentricity of loading is less than the bar resistance.

Bending of the cast-in plate

The following calculations will check the resistance of the cast-in plate in bending for the eccentricity moment tension. The resistance model for end-plate from BS EN 1993-1-8 Clause 6.2.4 will be used.

(A) Check Mode 2 failure: bolt failure with yielding of the flange. In this case the bars are substituted for bolts.

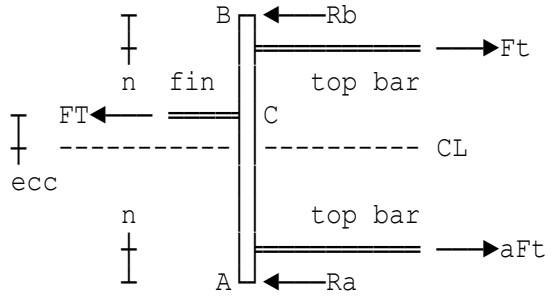

fin = fin plate.
ecc = eccentricity to centre line of cast-in plate.
CL = centre line of the cast-in plate.

PLAN ON CAST-IN PLATE

Equation 1: Mc + Ra((n+(m+ecc)))) - aFt(m+ecc) = 0
Equation 2: Mc + Rb((n+(m-ecc)))) - Ft(m-ecc) = 0

Bar end distance	ex=70 mm
Cast-in plate thickness	tp=25 mm
Force	Ft=FtRd/ntb=213 kN
Moment	Mc=MplRd=12.5 kNm
From equation 2	Rb=(Ft*(m-ecc)-Mc*1E3)/(n+(m-ecc)) =-74.6 kN

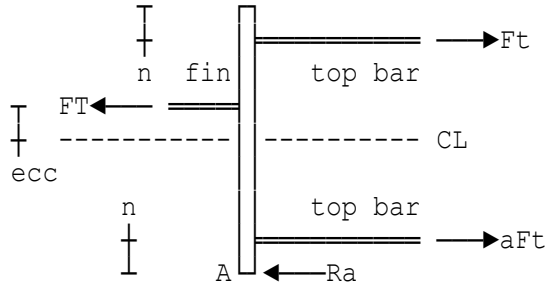

ecc=35 mm
n=47.5 mm
bsp=155 mm

PLAN ON CAST-IN PLATE

Tension resistance	FT=Ft*(a*n+(n+bsp))/(n+(bsp/2+ecc)) =285 kN
Design tension force	T=Md/l=202 kN

As T ≤ FT (202 kN ≤ 285 kN), Mode 2 failure check OK.
Bending moment at fin plate face M=Ft*(m-ecc)/1E3=6.64 kNm
As M ≤ MplRd (6.64 kNm ≤ 12.5 kNm), bending moment at the face of the fin plate is less than the cast-in plate moment resistance.

(B) Check Mode 1 failure: consider a vertical centre line through the cast-in plate and fin plate.

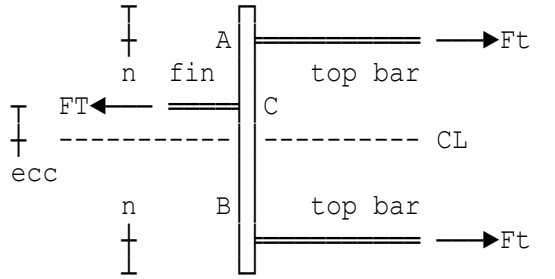

ecc=35 mm
n=47.5 mm
m=66.1 mm

PLAN ON CAST-IN PLATE

Total resistance force FRdT1=FRdT1A+FRdT1B=1197 kN
As T ≤ FRdT1 (202 kN ≤ 1197 kN), Mode 1 failure check OK.

CAST-IN PLATE DETAILS	Depth	560 mm
	Breadth	250 mm
	Thickness	25 mm

(C) Check the cast-in plate under the tying load case
Tension resistance FT=Ft*(a*n+(n+bsp))/com1=328 kN
As FT ≥ 2*FtEd/nb (328 kN ≥ 250 kN), tension resistance exceeds the design tying force.
As M ≤ MplRd (7.63 kNm ≤ 15.5 kNm), bending moment in cast-in plate is less than the cast-in plate moment resistance. Hence the 25 mm thick cast-in plate is acceptable for the tying load case.

Resistance of the combined cast-in plate and fin plate

The resistance of the combined cast-in plate and fin plate to bending in the vertical plane will be considered. The fin plate will need to be checked in bending at the face of the cast-in plate. The nominal eccentricity moment at the back of the plate calculated previously for determining the bar sizes is Md=85.5 kNm. The latter will be reduced by the assumed plate thickness.
As M ≤ MRd (71.7 kNm ≤ 115 kNm), the reduced bending moment is less than the fin plate moment resistance.

(A) Tying load case
The fin plate and cast-in plate acting as a Tee section spans between the top and bottom tie bars to resist tie forces. The span of the Tee section is the distance between the top & bottom tie bars.

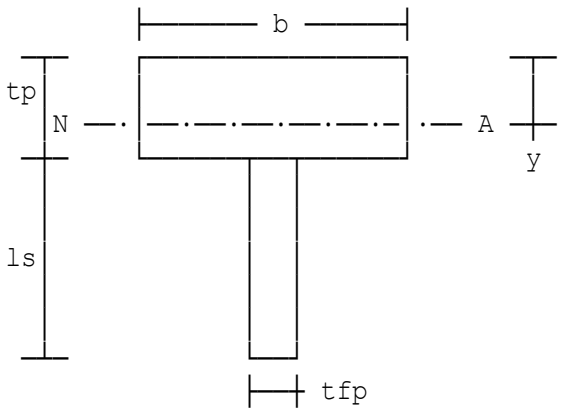

ls = length of stem
y = depth to NA
tp =25 mm
tfp=10 mm

Consider the cast-in plate and fin plate acting as a Tee section.

Assumed Tee section flange width b=100 mm
Length of Tee stem ls=100 mm
Span of Tee section Ltee=0.44 m

(B) Plastic modulus
Plastic modulus of Tee section Z=z1+z2+z3=75625 mm³
Moment resistance MRd=fufp*Z/(gammu*1E6)=28.2 kNm
As M ≤ MRd (27.5 kNm ≤ 28.2 kNm), the bending moment is less than the Tee section moment resistance.

Welding reinforcement to cast-in plate

Bar strength	Ft=245 kN
Partial factor (cast-in plate)	gamm=1.1
Weld coefficient	betaw=0.9
Design strength of weld	fvwd=fup/(betaw*gamm*(3)^0.5)
	=274 N/mm²

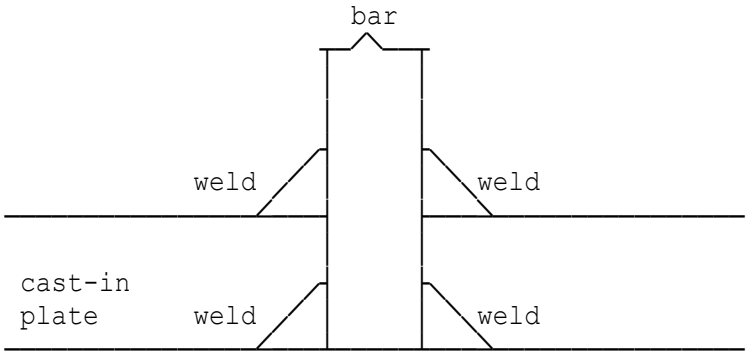

Two welds round the bar will need to be provided as shown in diagram.

Throat length required	a=Ft*1E3/(2*fvwd*PI*dr)=5.7 mm
Weld leg length (reinf'ment)	sr=a/0.7071=8.06 mm
Weld leg length to be adopted	sr=10 mm

PUNCHING SHEAR

The shear stress expression below is as per Clause 6.4.4(2).

$$vEd = \frac{VEd}{ui \cdot d} + \frac{k \cdot MEd}{Wi \cdot d}$$

Consider the bending component only for the eccentricity moment and the direct component only for the tie force as these are separate load cases.

Definitions:
- loaded area refers to the cross-sectional area of the stiff bearing
- load perimeter refers to the stiff bearing plate perimeter
- load face refers to the stiff bearing plate face
- face of the load refers to the face of the stiff bearing plate
- loaded area dimensions refers to stiff bearing area dimensions

(A) Shear stress on plate perimeter due to eccentricity moment

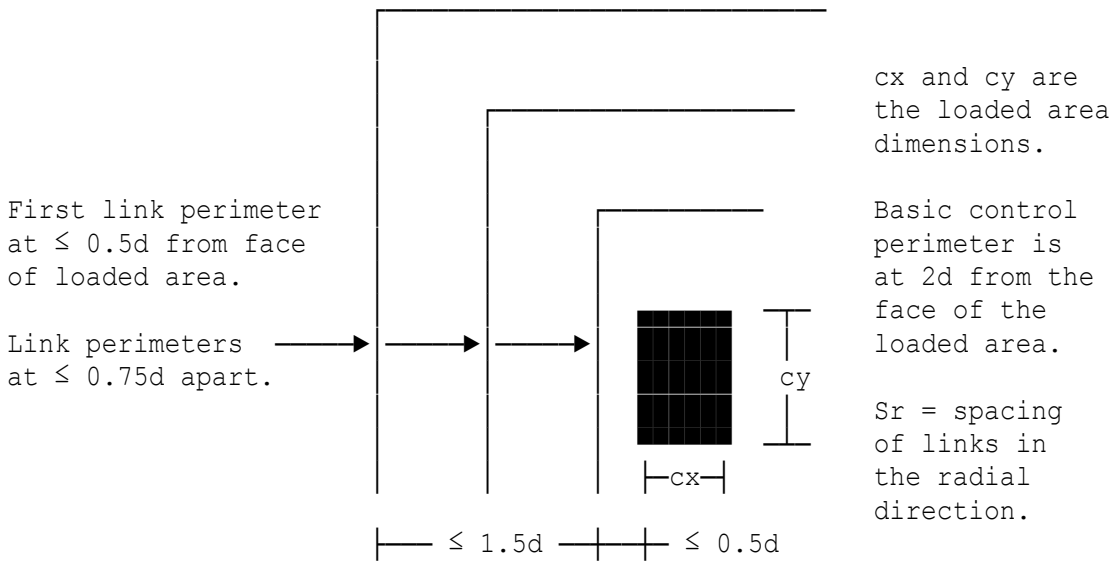

Average effective depth d=170 mm
Dimension of loaded area cx=250 mm
Dimension of loaded area cy=560 mm
As vEd ≤ vRdmax (1.227 N/mm² ≤ 5.712 N/mm²), shear stress at load perimeter is within the maximum punching shear resistance.

Shear stress on the basic control perimeter u1 due to bending

Determine the value of the shear resistance assuming there is no shear reinforcement as per EC2 Clause 6.4.4(1).
Reinforcement ratio in x-dir p1x=0.004
Reinforcement ratio in y-dir p1y=0.0023
Design punching shear resistance vRdc=(0.18/gamc)*k*(100*p1 *fck)^0.333=0.551 N/mm²
Min punching shear resistance vmin=0.035*k^1.5*fck^0.5=0.6261 N/mm²
Hence, the minimum design punching shear resistance governs.
Design punching shear resistance vRdc=0.6261 N/mm²
As vEd ≤ vRdc (0.2384N/mm² ≤ 0.6261 N/mm²), punching shear reinforcement is not necessary for this load case.

(B) Shear stress on plate perimeter due to tie force

An estimate of the shear reinforcement required for tying action will be made, assuming the tie force is carried into the wall through the cast-in plate (no bending checks on the wall will be carried out).
The tie force is a direct force VEd'=FtEd=500 kN
Partial safety factor (concrete) gamc=1.2 (accidental load case)
Load perimeter uo=2*(cx+cy)=1620 mm
Shear stress at load perimeter vEd=VEd'*1000/(uo*d)=1.816 N/mm²
Maximum punching shear resistance vRdmax=0.5*v*fcd=7.14 N/mm²
As vEd ≤ vRdmax (1.816 N/mm² ≤ 7.14 N/mm²), shear stress at load perimeter is within the maximum punching shear resistance.

Check shear stress at control perimeter u1 at 2d from load face

Basic control perimeter at 2d u1=2*(cx+cy)+4*PI*d=3756 mm
Design punching shear resistance vRdc=(0.18/gamc)*k*(100*p1 *fck)^0.333=0.6888 N/mm²
Min punching shear resistance vmin=0.035*k^1.5*fck^0.5=0.6261 N/mm² < 0.6888 kN and hence OK.
As vEd > vRdc (0.783 N/mm² > 0.6888 N/mm²), punching shear reinforcement needs to be provided.

Outer control perimeter where shear links are no longer required

Outer control perimeter Uout=VEd'*1000/(d*vRdc)=4270 mm
Radius to Uout rout=(Uout-lcf)/(2*PI)=421.8 mm
The outer perimeter of shear reinforcement should be at a distance not greater than 1.5d from the outer control perimeter Uout. Radius to outer perimeter of shear reinforcement Outper=rout-1.5*d
=166.8 mm from load face

Shear links on basic control perimeter u1

The partial safety factor for reinf'ment will be taken as gams=1.15.
Spac.inside 2d control perimeter St=255 mm
Spac.outside control perimeter u1 St'=340 mm
Char yield strength of reinft. fyk=500 N/mm²
Diameter of shear reinforcement dial=6 mm
Spacing of links to be used spac=255 mm
Use minimum H 6 (28.27 mm²) legs of links @ 255 mm c/c around perimeter u1 (i.e. in the tangential direction).

NOTE:
Punching shear links on perimeter 3 (i.e. at 2d from the load face) shown below are optional and could be omitted. This is because the radius Outper < 1.25*d (166.8 mm < 212.5 mm).

Summary of punching shear links

In the following calculation the first perimeter will be taken at 0.5d from the face of the load and subsequent perimeters will be spaced at 0.75d apart.

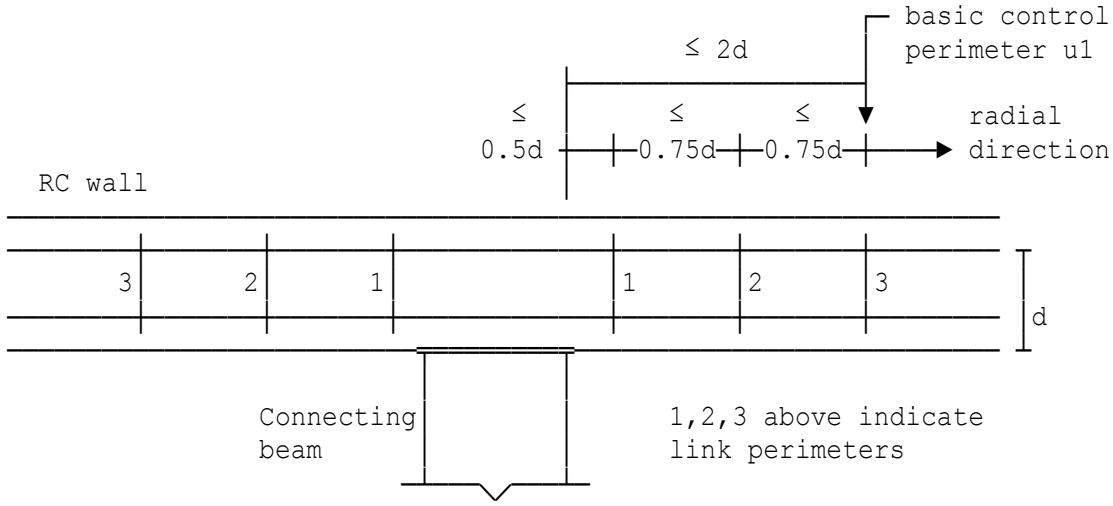

Links on perimeter 1 :
Use minimum H 6 (28.27 mm²) legs of links @ 210 mm c/c in the tangential direction and 125 mm c/c in the radial direction.

Links on perimeter 2 :
Use minimum H 6 (28.27 mm²) legs of links @ 255 mm c/c in the tangential direction and 125 mm c/c in the radial direction.

Links on perimeter 3:
Use minimum H 6 (28.27 mm²) legs of links @ 255 mm c/c in the tangential direction and 125 mm c/c in the radial direction.

DESIGN SUMMARY - nominally pinned joint

Design loads:	**Design shear**	**570 kN**
	Shear resistance	**848.2 kN (stud group)**
	Shear resistance	**141.4 kN (per stud)**
	Design tying force	**500 kN**
	Tension resistance	**982 kN (bar group)**
	Tension resistance	**213.4 kN (per bar)**
Grade/strength:	**Concrete**	**40 N/mm²**
	Fin plate	**S 275**
	Cast-in plate	**S 355**
	M20 bolts	**8.8**

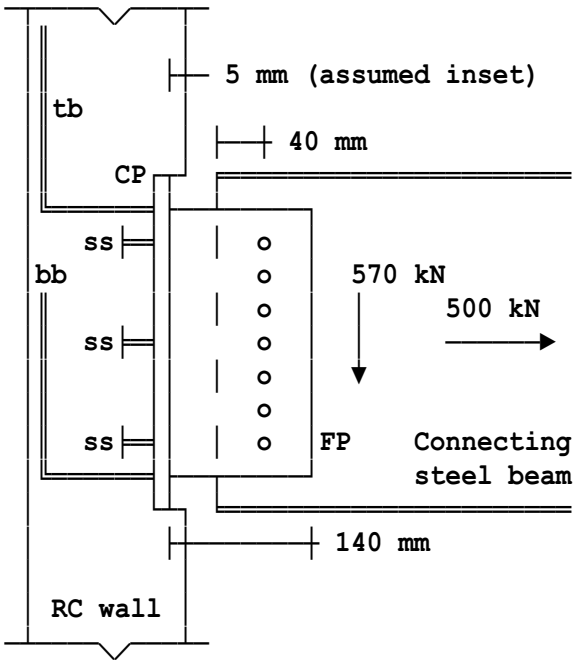

FP = fin plate
CP = cast-in plate
tb = top bars
bb = bottom bars
ss = shear stud

Fin plate:

No. of bolts	**7**
Plate depth	**500 mm**
Plate width	**140 mm**
Plate thickness	**10 mm**

Cast-in plate:

Plate depth	**560 mm**
Plate width	**250 mm**
Plate thickness	**25 mm**

Weld leg length: Fin to cast-in plate — **2 No/8 mm FW need to be provided for connecting the fin plate to cast-in plate to eliminate the possibility of weld failure.**

Stud welding: **It is assumed that studs will be welded using electric arc stud-welding equipment. See SCI publication P300 for further information.**

Weld leg length: Reinforcement — **10 mm FW with two welds round the bar as shown in the diagram. PPFW is a partial penetration fillet weld (FW) in countersunk hole.**

dr=25 mm (bar diameter)
tp=25 mm (plate thickness)

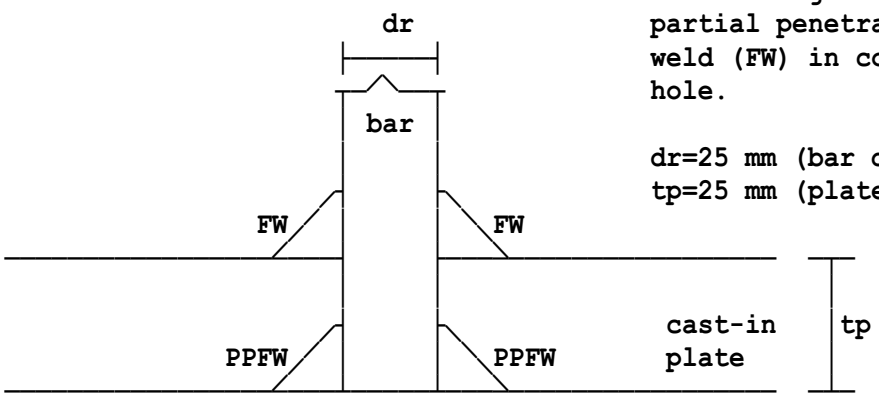

Shear studs:	**No. and diameter**	**6 No/25 mm**
	Height	**100 mm**
	Spacing vertically	**125 mm**
	Spacing horizontally	**130 mm**
	Vertical edge distance	**155 mm**
	Horiz. edge distance	**60 mm**

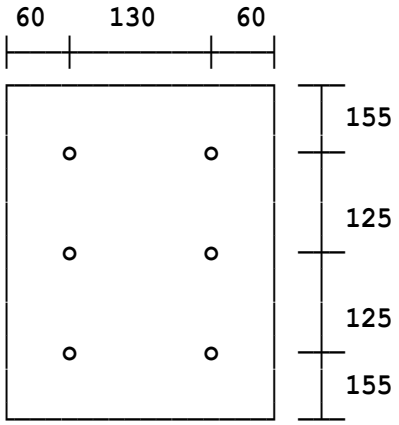

Shear studs:
2x3 shear stud array
Total 6 studs
All dimensions in mm

Reinforcement:	**Top bars**	**2 No/25 mm diameter**
	Bottom bars	**2 No/25 mm diameter**
	Top bar spacing (bsp)	**155 mm (laterally)**
	Bar edge distance (n')	**47.5 mm (top & bottom bars)**
	Bar end distance (ex)	**70 mm (top & bottom bars)**
	Bend bars mandrel	**263.3 mm diameter**
	Bar anchorage length	**1052 mm**

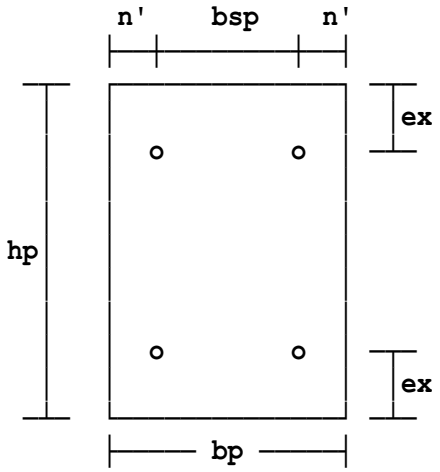

Cast-in plate with a total of 4 bars as shown i.e. 2 top bars and 2 bottom bars.
n'=47.5 mm (edge distance)
bsp=155 mm (top bars)
bp=250 mm
hp=560 mm
ex=70 mm

Punching shear links are required, refer to the punching shear section of the calculations for diameter and spacing of links. Punching shear links on perimeter 3 are optional.

Location: Ex2 - Cast-in plate design (3x4 Shear stud Array)

General design information

The calculations are in accordance with SCI publication P416 entitled ' The Design of Cast-In Plates ', EC2 Part 1-1, EC2 Part 1-8 and EC3 Part 1-1. Assume nominally pinned connections in simple construction for the building design. Clause references refer to EC2 Part 1-1.

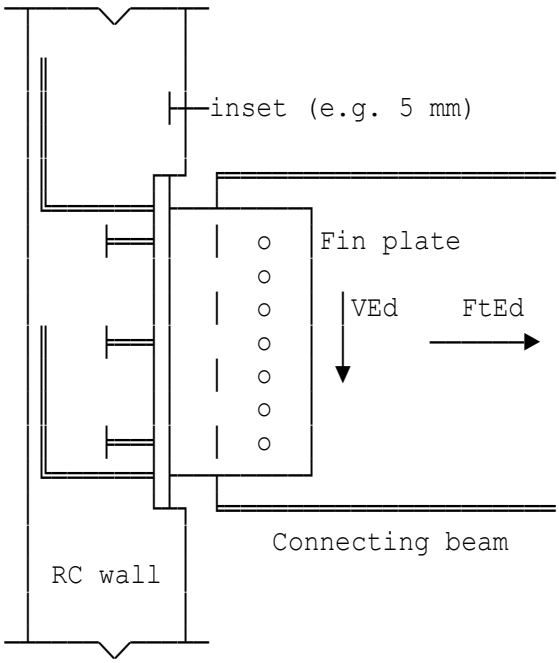

The shear stud resistance check will be as per EC4 Part 1-1. The shear force is transferred to the fin plate by bolts. The cast-in plate and its welded connection to the fin plate will resist the eccentricity moment due to the offset of the bolt group from the face of the plate. The standard arrangement for fin plates in the Green Book (i.e. SCI publication P358) is 10 mm thick fin plate using S275 material, with two 8 mm FW. This will eliminate the possibility of weld failure. The face of the cast-in plate is normally inset to allow for the sliding form.

Both the cast-in plate and fin plate will need site-applied corrosion protection system if corrosion protection of steelwork is specified. Furthermore parts of the connection plate (e.g. the fin plate) will also require fire protection as for the connecting beam.

Design shear (+ve value)	VEd=570 kN
Design tying force (+ve value)	FtEd=500 kN

Fin plate arrangement

No. of rows of M20 bolts	nbr=7
Fin plate depth	hfp=500 mm
Fin plate width	bfp=140 mm

Choose initial shear stud arrangement

Stud diameter	ds=19 mm
Stud height	hs=100 mm
Concrete strength	fck=40 N/mm²
Spacing of studs (vertically)	d1=106 mm
Spacing of studs (horizontally)	d2=75 mm
Edge distance (vertically)	e1=121 mm
Edge distance (horizontally)	e2=50 mm

Initial reinforcement arrangement

Reinforcement welded to cast-in plate for bending and tying resistance will need to be provided.

Bar diameter (top & bottom bars)	dr=25 mm
Total number of bars	nb=4
Tension resistance (bar group)	PtRd=TABLE 3 for nb=4, dr=25 =982 kN
Design tying force	FtEd=500 kN

As PtRd ≥ FtEd (982 kN ≥ 500 kN), the tension resistance exceeds the design tying force.

Confirm the shear stud arrangement - EC4 Part 1-1 Cl. 6.6.3.1

Governing group shear resistance	PRd=PRd1=980 kN

As PRd ≥ VEd (980 kN ≥ 570 kN), the shear resistance exceeds the design shear and hence studs provided are satisfactory.

Horizontal deviation	ecc=35 mm
Angle β (rotational deviation)	beta=5.71°
Maximum shear in corner stud	Vmax2=SQR((VEd/ns+V2)^2+V1^2)=57.7 kN
Shear resistance per stud	PRd1=PRd/ns=81.7 kN

As Vmax2 ≤ PRd1 (57.7 kN ≤ 81.7 kN), corner stud shear OK.

Reinforcement arrangement and bar size

(A) Eccentricity moment on the cast-in plate

Maximum eccentricity	ep=150 mm
Design moment due to eccentricity	Md=VEd*ep/1000=85.5 kNm

(B) Vertical lever arm for tension - compression couple

Design tension force	T=Md/l=202 kN
Design compression force	C=T2=202 kN

(C) Confirm the bar size

Top bar spacing (laterally)	bsp=150 mm

As T ≤ FtRd (202 kN ≤ 427 kN), bars provided are OK.
As FtEd' ≤ FtRd1 (148 kN ≤ 213 kN), maximum tensile force due to eccentricity of loading is less than the bar resistance.

Bending of the cast-in plate

The following calculations will check the resistance of the cast-in plate in bending for the eccentricity moment tension. The resistance model for end-plate from BS EN 1993-1-8 Clause 6.2.4 will be used.

(A) Check Mode 2 failure: bolt failure with yielding of the flange. In this case the bars are substituted for bolts.

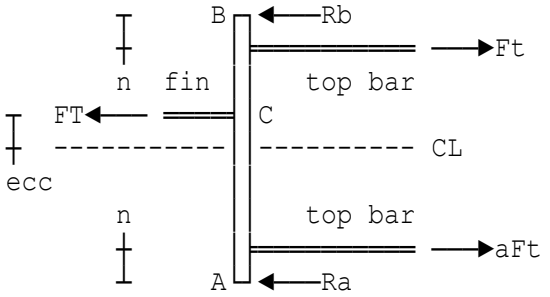

fin = fin plate.
ecc = eccentricity to centre line of cast-in plate.
CL = centre line of the cast-in plate.

PLAN ON CAST-IN PLATE

Equation 1: Mc + Ra((n+(m+ecc)))) - aFt(m+ecc) = 0
Equation 2: Mc + Rb((n+(m-ecc)))) - Ft(m-ecc) = 0

Bar end distance	ex=70 mm
Cast-in plate thickness	tp=25 mm
Force	Ft=FtRd/ntb=213 kN
Moment	Mc=MplRd=12.3 kNm
From equation 2	Rb=(Ft*(m-ecc)-Mc*1E3)/(n+(m-ecc)) =-79 kN

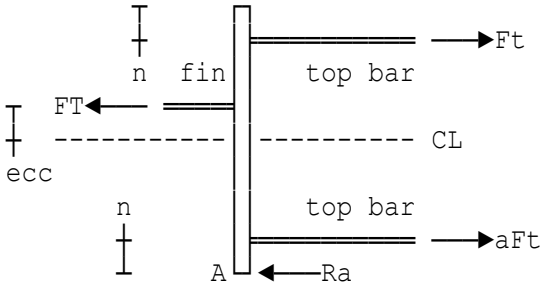

ecc=35 mm
n=50 mm
bsp=150 mm

PLAN ON CAST-IN PLATE

Tension resistance	FT=Ft*(a*n+(n+bsp))/(n+(bsp/2+ecc)) =283 kN
Design tension force	T=Md/l=202 kN

As T ≤ FT (202 kN ≤ 283 kN), Mode 2 failure check OK.
Bending moment at fin plate face M=Ft*(m-ecc)/1E3=6.1 kNm
As M ≤ MplRd (6.1 kNm ≤ 12.3 kNm), bending moment at the face of the fin plate is less than the cast-in plate moment resistance.

(B) Check Mode 1 failure: consider a vertical centre line through the cast-in plate and fin plate.

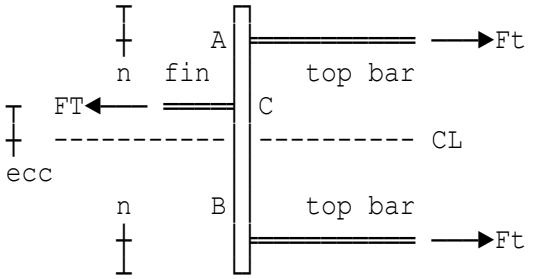

ecc=35 mm
n=50 mm
m=63.6 mm

PLAN ON CAST-IN PLATE

Total resistance force FRdT1=FRdT1A+FRdT1B=1274 kN
As T ≤ FRdT1 (202 kN ≤ 1274 kN), Mode 1 failure check OK.

CAST-IN PLATE DETAILS	Depth	560 mm
	Breadth	250 mm
	Thickness	25 mm

(C) Check the cast-in plate under the tying load case
Tension resistance FT=Ft*(a*n+(n+bsp))/com1=326 kN
As FT ≥ 2*FtEd/nb (326 kN ≥ 250 kN), tension resistance exceeds the design tying force.
As M ≤ MplRd (7.02 kNm ≤ 15.3 kNm), bending moment in cast-in plate is less than the cast-in plate moment resistance. Hence the 25 mm thick cast-in plate is acceptable for the tying load case.

Resistance of the combined cast-in plate and fin plate

The resistance of the combined cast-in plate and fin plate to bending in the vertical plane will be considered. The fin plate will need to be checked in bending at the face of the cast-in plate. The nominal eccentricity moment at the back of the plate calculated previously for determining the bar sizes is Md=85.5 kNm. The latter will be reduced by the assumed plate thickness.
As M ≤ MRd (71.3 kNm ≤ 115 kNm), the reduced bending moment is less than the fin plate moment resistance.

(A) Tying load case
The fin plate and cast-in plate acting as a Tee section spans between the top and bottom tie bars to resist tie forces. The span of the Tee section is the distance between the top & bottom tie bars.

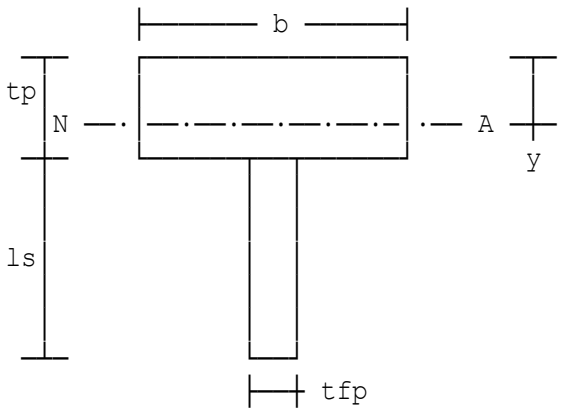

ls = length of stem
y = depth to NA
tp =25 mm
tfp=10 mm

Consider the cast-in plate and fin plate acting as a Tee section.

Assumed Tee section flange width b=100 mm
Length of Tee stem ls=100 mm
Span of Tee section Ltee=0.42 m

(B) Plastic modulus
Plastic modulus of Tee section Z=z1+z2+z3=75625 mm³
Moment resistance MRd=fufp*Z/(gammu*1E6)=28.2 kNm
As M ≤ MRd (26.3 kNm ≤ 28.2 kNm), the bending moment is less than the Tee section moment resistance.

Welding reinforcement to cast-in plate

Bar strength	Ft=245 kN
Partial factor (cast-in plate)	gamm=1.1
Weld coefficient	betaw=0.9
Design strength of weld	fvwd=fup/(betaw*gamm*(3)^0.5)
	=274 N/mm²

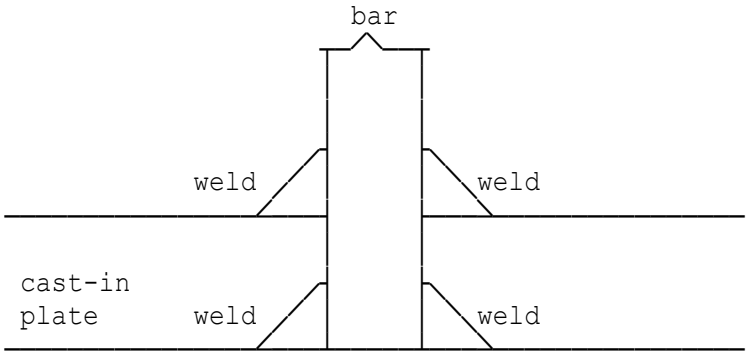

Two welds round the bar will need to be provided as shown in diagram.

Throat length required	a=Ft*1E3/(2*fvwd*PI*dr)=5.7 mm
Weld leg length (reinf'ment)	sr=a/0.7071=8.06 mm
Weld leg length to be adopted	sr=10 mm

PUNCHING SHEAR

The shear stress expression below is as per Clause 6.4.4(2).

$$vEd = \frac{VEd}{ui \cdot d} + \frac{k \cdot MEd}{Wi \cdot d}$$

Consider the bending component only for the eccentricity moment and the direct component only for the tie force as these are separate load cases.

Definitions:
- loaded area refers to the cross-sectional area of the stiff bearing
- load perimeter refers to the stiff bearing plate perimeter
- load face refers to the stiff bearing plate face
- face of the load refers to the face of the stiff bearing plate
- loaded area dimensions refers to stiff bearing area dimensions

(A) Shear stress on plate perimeter due to eccentricity moment

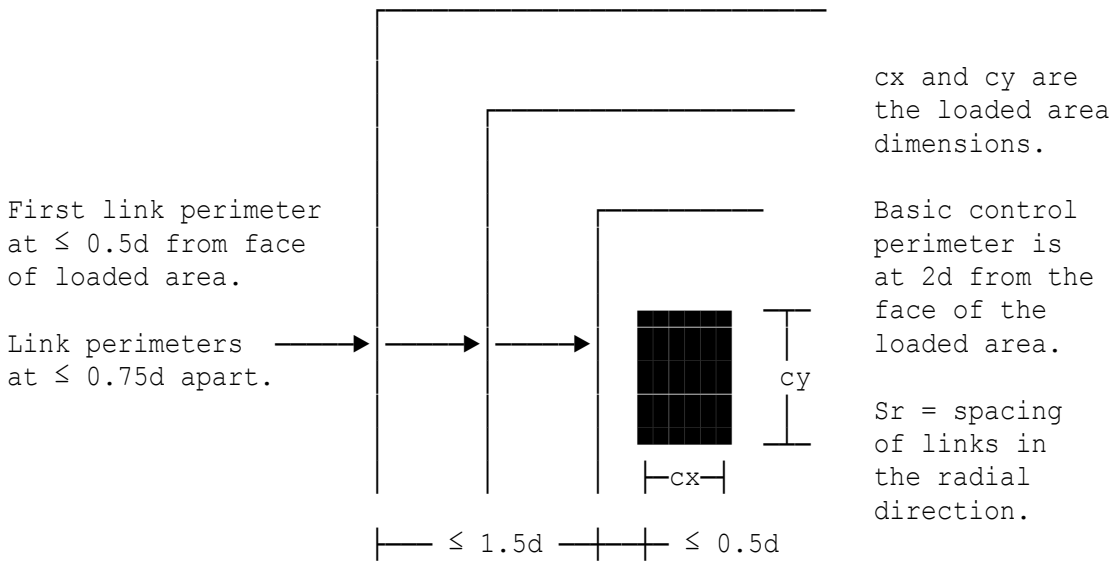

Average effective depth d=170 mm
Dimension of loaded area cx=250 mm
Dimension of loaded area cy=560 mm
As vEd ≤ vRdmax (1.227 N/mm² ≤ 5.712 N/mm²), shear stress at load perimeter is within the maximum punching shear resistance.

Shear stress on the basic control perimeter u1 due to bending

Determine the value of the shear resistance assuming there is no shear reinforcement as per EC2 Clause 6.4.4(1).
Reinforcement ratio in x-dir p1x=0.004
Reinforcement ratio in y-dir p1y=0.0023
Design punching shear resistance vRdc=(0.18/gamc)*k*(100*p1 *fck)^0.333=0.551 N/mm²
Min punching shear resistance vmin=0.035*k^1.5*fck^0.5=0.6261 N/mm²
Hence, the minimum design punching shear resistance governs.
Design punching shear resistance vRdc=0.6261 N/mm²
As vEd ≤ vRdc (0.2384N/mm² ≤ 0.6261 N/mm²), punching shear reinforcement is not necessary for this load case.

(B) Shear stress on plate perimeter due to tie force

An estimate of the shear reinforcement required for tying action will be made, assuming the tie force is carried into the wall through the cast-in plate (no bending checks on the wall will be carried out).
The tie force is a direct force VEd'=FtEd=500 kN
Partial safety factor (concrete) gamc=1.2 (accidental load case)
Load perimeter uo=2*(cx+cy)=1620 mm
Shear stress at load perimeter vEd=VEd'*1000/(uo*d)=1.816 N/mm²
Maximum punching shear resistance vRdmax=0.5*v*fcd=7.14 N/mm²
As vEd ≤ vRdmax (1.816 N/mm² ≤ 7.14 N/mm²), shear stress at load perimeter is within the maximum punching shear resistance.

Check shear stress at control perimeter u1 at 2d from load face

Basic control perimeter at 2d u1=2*(cx+cy)+4*PI*d=3756 mm
Design punching shear resistance vRdc=(0.18/gamc)*k*(100*p1 *fck)^0.333=0.6888 N/mm²
Min punching shear resistance vmin=0.035*k^1.5*fck^0.5=0.6261 N/mm² < 0.6888 kN and hence OK.
As vEd > vRdc (0.783 N/mm² > 0.6888 N/mm²), punching shear reinforcement needs to be provided.

Outer control perimeter where shear links are no longer required

Outer control perimeter Uout=VEd'*1000/(d*vRdc)=4270 mm
Radius to Uout rout=(Uout-lcf)/(2*PI)=421.8 mm
The outer perimeter of shear reinforcement should be at a distance not greater than 1.5d from the outer control perimeter Uout. Radius to outer perimeter of shear reinforcement Outper=rout-1.5*d
=166.8 mm from load face

Shear links on basic control perimeter u1

The partial safety factor for reinf'ment will be taken as gams=1.15.
Spac.inside 2d control perimeter St=255 mm
Spac.outside control perimeter u1 St'=340 mm
Char yield strength of reinft. fyk=500 N/mm²
Diameter of shear reinforcement dial=6 mm
Spacing of links to be used spac=255 mm
Use minimum H 6 (28.27 mm²) legs of links @ 255 mm c/c around perimeter u1 (i.e. in the tangential direction).

NOTE:
Punching shear links on perimeter 3 (i.e. at 2d from the load face) shown below are optional and could be omitted. This is because the radius Outper < 1.25*d (166.8 mm < 212.5 mm).

Summary of punching shear links

In the following calculation the first perimeter will be taken at 0.5d from the face of the load and subsequent perimeters will be spaced at 0.75d apart.

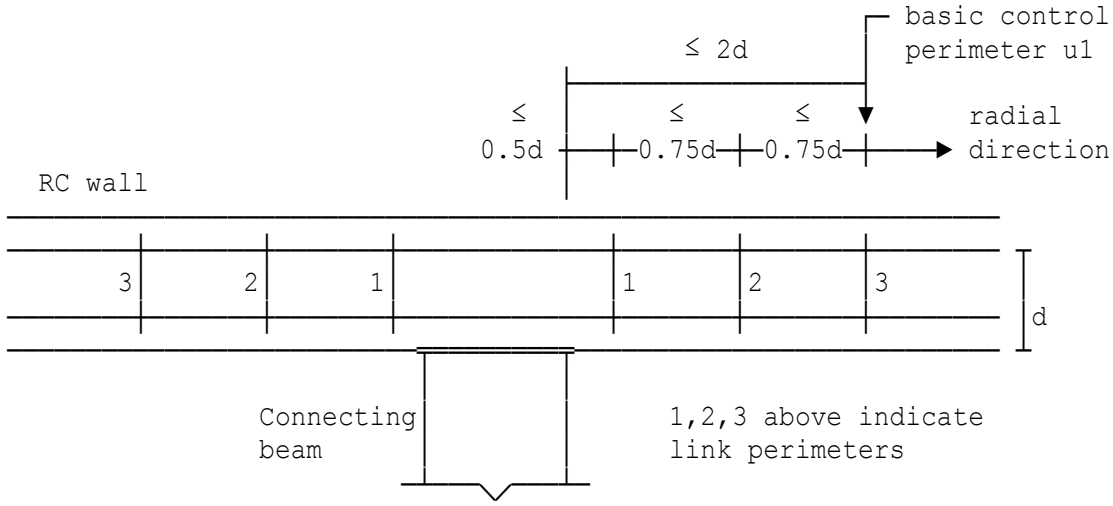

Links on perimeter 1 :
Use minimum H 6 (28.27 mm²) legs of links @ 210 mm c/c in the tangential direction and 125 mm c/c in the radial direction.

Links on perimeter 2 :
Use minimum H 6 (28.27 mm²) legs of links @ 255 mm c/c in the tangential direction and 125 mm c/c in the radial direction.

Links on perimeter 3:
Use minimum H 6 (28.27 mm²) legs of links @ 255 mm c/c in the tangential direction and 125 mm c/c in the radial direction.

DESIGN SUMMARY - nominally pinned joint

Design loads:	**Design shear**	**570 kN**
	Shear resistance	**979.9 kN (stud group)**
	Shear resistance	**81.66 kN (per stud)**
	Design tying force	**500 kN**
	Tension resistance	**982 kN (bar group)**
	Tension resistance	**213.4 kN (per bar)**
Grade/strength:	**Concrete**	**40 N/mm²**
	Fin plate	**S 275**
	Cast-in plate	**S 355**
	M20 bolts	**8.8**

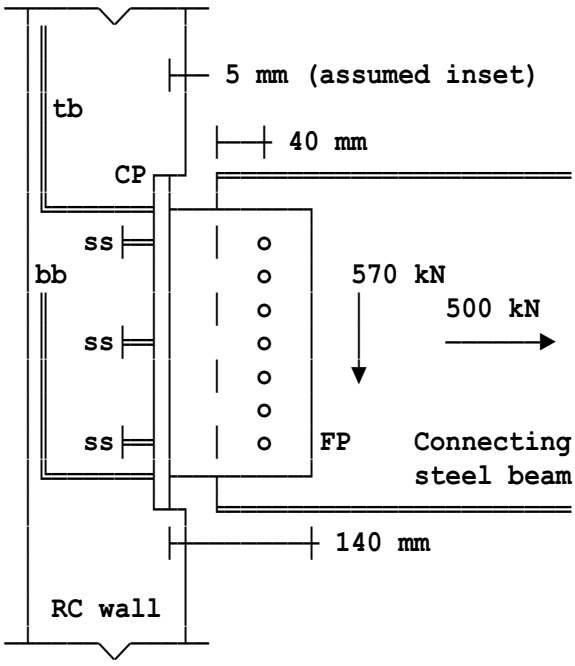

FP = fin plate
CP = cast-in plate
tb = top bars
bb = bottom bars
ss = shear stud

Fin plate:

No. of bolts	**7**
Plate depth	**500 mm**
Plate width	**140 mm**
Plate thickness	**10 mm**

Cast-in plate:

Plate depth	**560 mm**
Plate width	**250 mm**
Plate thickness	**25 mm**

Weld leg length: Fin to cast-in plate — **2 No/8 mm FW need to be provided for connecting the fin plate to cast-in plate to eliminate the possibility of weld failure.**

Stud welding: **It is assumed that studs will be welded using electric arc stud-welding equipment. See SCI publication P300 for further information.**

Weld leg length: Reinforcement — **10 mm FW with two welds round the bar as shown in the diagram. PPFW is a partial penetration fillet weld (FW) in countersunk hole.**

dr=25 mm (bar diameter)
tp=25 mm (plate thickness)

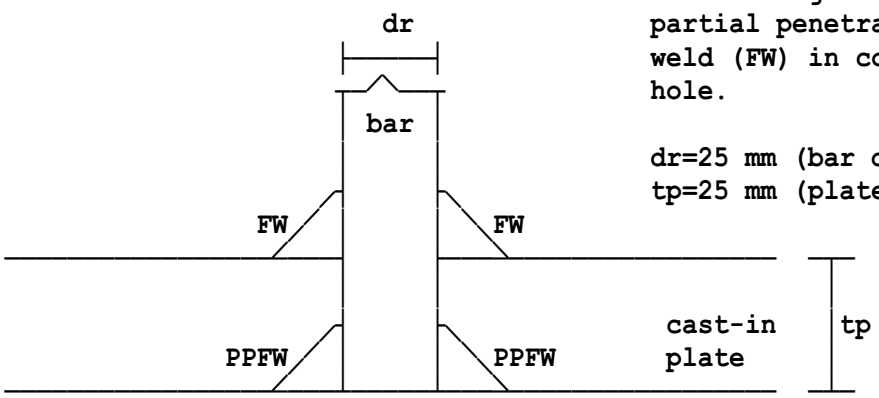

Shear studs:	**No. and diameter**	**12 No/19 mm**
	Height	**100 mm**
	Spacing vertically	**106 mm**
	Spacing horizontally	**75 mm**
	Vertical edge distance	**121 mm**
	Horiz. edge distance	**50 mm**

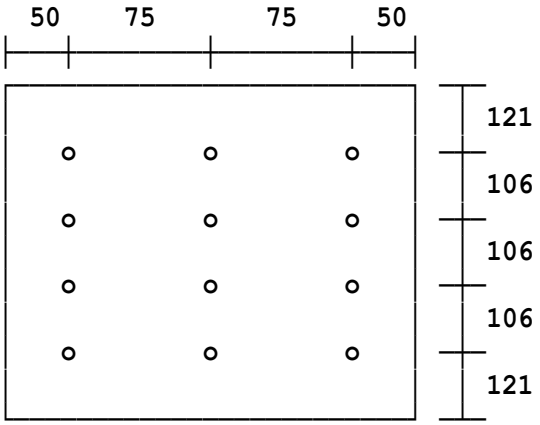

Shear studs:
3x4 shear stud array
Total 12 studs
All dimensions in mm

Reinforcement:	**Top bars**	**2 No/25 mm diameter**
	Bottom bars	**2 No/25 mm diameter**
	Top bar spacing (bsp)	**150 mm (laterally)**
	Bar edge distance (n')	**50 mm (top & bottom bars)**
	Bar end distance (ex)	**70 mm (top & bottom bars)**
	Bend bars mandrel	**266.8 mm diameter**
	Bar anchorage length	**1052 mm**

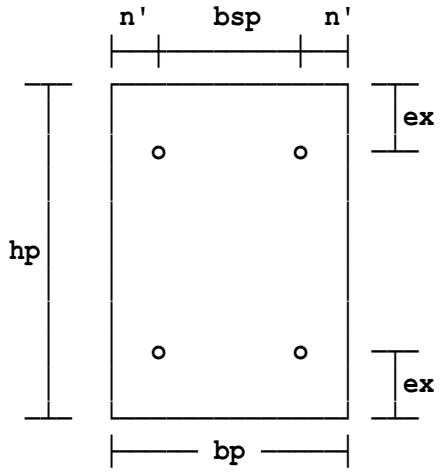

Cast-in plate with a total of 4 bars as shown i.e. 2 top bars and 2 bottom bars.
n'=50 mm (edge distance)
bsp=150 mm (top bars)
bp=250 mm
hp=560 mm
ex=70 mm

Punching shear links are required, refer to the punching shear section of the calculations for diameter and spacing of links. Punching shear links on perimeter 3 are optional.

Location: Ex3 - Cast-in plate design (2x3 Shear stud Array)

General design information

The calculations are in accordance with SCI publication P416 entitled ' The Design of Cast-In Plates ', EC2 Part 1-1, EC2 Part 1-8 and EC3 Part 1-1. Assume nominally pinned connections in simple construction for the building design. Clause references refer to EC2 Part 1-1.

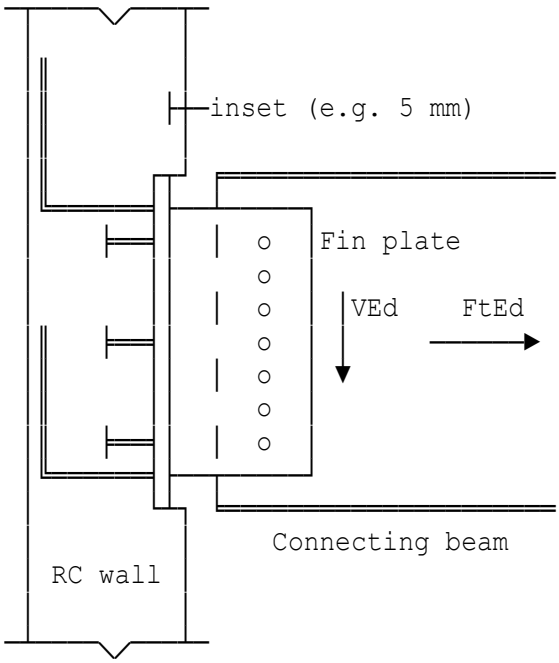

The shear stud resistance check will be as per EC4 Part 1-1. The shear force is transferred to the fin plate by bolts. The cast-in plate and its welded connection to the fin plate will resist the eccentricity moment due to the offset of the bolt group from the face of the plate. The standard arrangement for fin plates in the Green Book (i.e. SCI publication P358) is 10 mm thick fin plate using S275 material, with two 8 mm FW. This will eliminate the possibility of weld failure. The face of the cast-in plate is normally inset to allow for the sliding form.

Both the cast-in plate and fin plate will need site-applied corrosion protection system if corrosion protection of steelwork is specified. Furthermore parts of the connection plate (e.g. the fin plate) will also require fire protection as for the connecting beam.

Design shear (+ve value)	VEd=702 kN
Design tying force (+ve value)	FtEd=700 kN

Fin plate arrangement

No. of rows of M20 bolts	nbr=7
Fin plate depth	hfp=500 mm
Fin plate width	bfp=140 mm

Choose initial shear stud arrangement

Stud diameter	ds=25 mm
Stud height	hs=100 mm
Concrete strength	fck=40 N/mm²
Spacing of studs (vertically)	d1=125 mm
Spacing of studs (horizontally)	d2=130 mm
Edge distance (vertically)	e1=155 mm
Edge distance (horizontally)	e2=60 mm

Initial reinforcement arrangement

Reinforcement welded to cast-in plate for bending and tying resistance will need to be provided.

Bar diameter (top & bottom bars)	dr=25 mm
Total number of bars	nb=6
Tension resistance (bar group)	PtRd=TABLE 3 for nb=6, dr=25 =1473 kN
Design tying force	FtEd=700 kN

As PtRd ≥ FtEd (1473 kN ≥ 700 kN), the tension resistance exceeds the design tying force.

Confirm the shear stud arrangement - EC4 Part 1-1 Cl. 6.6.3.1

Governing group shear resistance	PRd=PRd1=848 kN

As PRd ≥ VEd (848 kN ≥ 702 kN), the shear resistance exceeds the design shear and hence studs provided are satisfactory.

Horizontal deviation	ecc=35 mm
Angle β (rotational deviation)	beta=1°
Maximum shear in corner stud	Vmax2=SQR((VEd/ns+V2)^2+V1^2)=140 kN
Shear resistance per stud	PRd1=PRd/ns=141 kN

As Vmax2 ≤ PRd1 (140 kN ≤ 141 kN), corner stud shear OK.

Reinforcement arrangement and bar size

(A) Eccentricity moment on the cast-in plate

Maximum eccentricity	ep=150 mm
Design moment due to eccentricity	Md=VEd*ep/1000=105 kNm

(B) Vertical lever arm for tension - compression couple

Design tension force	T=Md/l=255 kN
Design compression force	C=T2=255 kN

(C) Confirm the bar size

Top bar spacing (laterally)	bsp=150 mm

As T ≤ FtRd (255 kN ≤ 427 kN), bars provided are OK.
As FtEd' ≤ FtRd1 (187 kN ≤ 213 kN), maximum tensile force due to eccentricity of loading is less than the bar resistance.

Bending of the cast-in plate

The following calculations will check the resistance of the cast-in plate in bending for the eccentricity moment tension. The resistance model for end-plate from BS EN 1993-1-8 Clause 6.2.4 will be used.

(A) Check Mode 2 failure: bolt failure with yielding of the flange. In this case the bars are substituted for bolts.

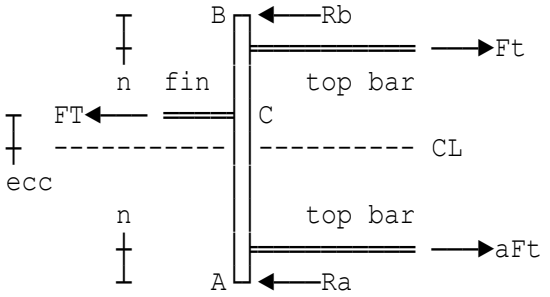

fin = fin plate.
ecc = eccentricity to centre line of cast-in plate.
CL = centre line of the cast-in plate.

PLAN ON CAST-IN PLATE

Equation 1: Mc + Ra((n+(m+ecc)))) - aFt(m+ecc) = 0
Equation 2: Mc + Rb((n+(m-ecc)))) - Ft(m-ecc) = 0

Bar end distance	ex=70 mm
Cast-in plate thickness	tp=25 mm
Force	Ft=FtRd/ntb=213 kN
Moment	Mc=MplRd=12.3 kNm
From equation 2	Rb=(Ft*(m-ecc)-Mc*1E3)/(n+(m-ecc)) =-79 kN

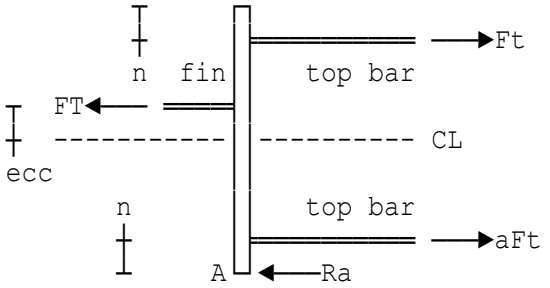

ecc=35 mm
n=50 mm
bsp=150 mm

PLAN ON CAST-IN PLATE

Tension resistance	FT=Ft*(a*n+(n+bsp))/(n+(bsp/2+ecc)) =283 kN
Design tension force	T=Md/l=255 kN

As T ≤ FT (255 kN ≤ 283 kN), Mode 2 failure check OK.
Bending moment at fin plate face M=Ft*(m-ecc)/1E3=6.1 kNm
As M ≤ MplRd (6.1 kNm ≤ 12.3 kNm), bending moment at the face of the fin plate is less than the cast-in plate moment resistance.

(B) Check Mode 1 failure: consider a vertical centre line through the cast-in plate and fin plate.

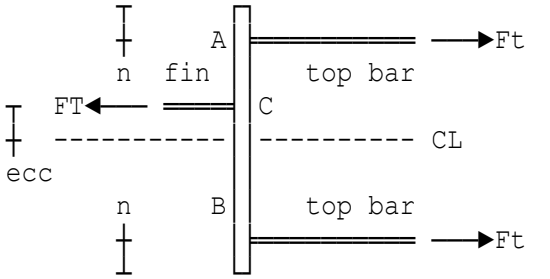

ecc=35 mm
n=50 mm
m=63.6 mm

PLAN ON CAST-IN PLATE

Total resistance force FRdT1=FRdT1A+FRdT1B=1274 kN
As T ≤ FRdT1 (255 kN ≤ 1274 kN), Mode 1 failure check OK.

CAST-IN PLATE DETAILS	Depth	560 mm
	Breadth	250 mm
	Thickness	25 mm

(C) Check the cast-in plate under the tying load case
Tension resistance FT=Ft*(a*n+(n+bsp))/com1=326 kN
As FT ≥ 2*FtEd/nb (326 kN ≥ 233 kN), tension resistance exceeds the design tying force.
As M ≤ MplRd (7.02 kNm ≤ 15.3 kNm), bending moment in cast-in plate is less than the cast-in plate moment resistance. Hence the 25 mm thick cast-in plate is acceptable for the tying load case.

Resistance of the combined cast-in plate and fin plate

The resistance of the combined cast-in plate and fin plate to bending in the vertical plane will be considered. The fin plate will need to be checked in bending at the face of the cast-in plate. The nominal eccentricity moment at the back of the plate calculated previously for determining the bar sizes is Md=105 kNm. The latter will be reduced by the assumed plate thickness.
As M ≤ MRd (87.8 kNm ≤ 115 kNm), the reduced bending moment is less than the fin plate moment resistance.

(A) Tying load case
The fin plate and cast-in plate acting as a Tee section spans between the top and bottom tie bars to resist tie forces. The span of the Tee section is the distance between the top & bottom tie bars.

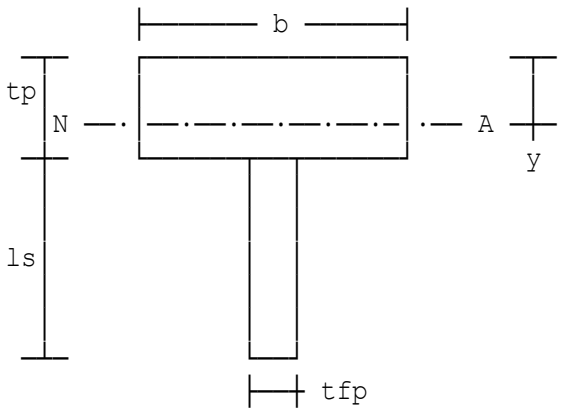

ls = length of stem
y = depth to NA
tp =25 mm
tfp=10 mm

Consider the cast-in plate and fin plate acting as a Tee section.

Assumed Tee section flange width b=150 mm
Length of Tee stem ls=110 mm
Span of Tee section Ltee=0.42 m

(B) Plastic modulus
Plastic modulus of Tee section Z=z1+z2+z3=117671 mm³
Moment resistance MRd=fufp*Z/(gammu*1E6)=43.9 kNm
As M ≤ MRd (36.8 kNm ≤ 43.9 kNm), the bending moment is less than the Tee section moment resistance.

Welding reinforcement to cast-in plate

Bar strength	Ft=245 kN
Partial factor (cast-in plate)	gamm=1.1
Weld coefficient	betaw=0.9
Design strength of weld	fvwd=fup/(betaw*gamm*(3)^0.5) =274 N/mm²

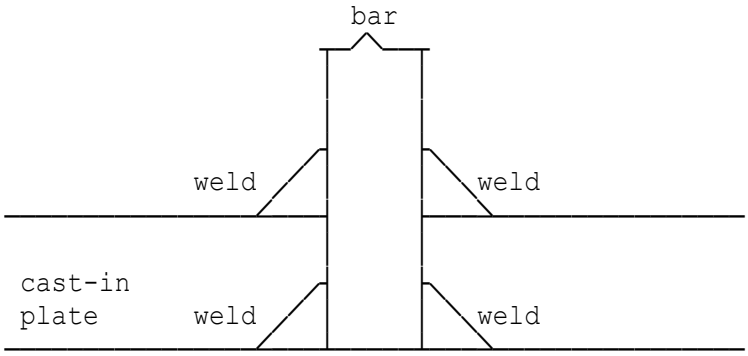

Two welds round the bar will need to be provided as shown in diagram.

Throat length required	a=Ft*1E3/(2*fvwd*PI*dr)=5.7 mm
Weld leg length (reinf'ment)	sr=a/0.7071=8.06 mm
Weld leg length to be adopted	sr=10 mm

PUNCHING SHEAR

The shear stress expression below is as per Clause 6.4.4(2).

$$vEd = \frac{VEd}{ui \cdot d} + \frac{k \cdot MEd}{Wi \cdot d}$$

Consider the bending component only for the eccentricity moment and the direct component only for the tie force as these are separate load cases.

Definitions:
- loaded area refers to the cross-sectional area of the stiff bearing
- load perimeter refers to the stiff bearing plate perimeter
- load face refers to the stiff bearing plate face
- face of the load refers to the face of the stiff bearing plate
- loaded area dimensions refers to stiff bearing area dimensions

(A) Shear stress on plate perimeter due to eccentricity moment

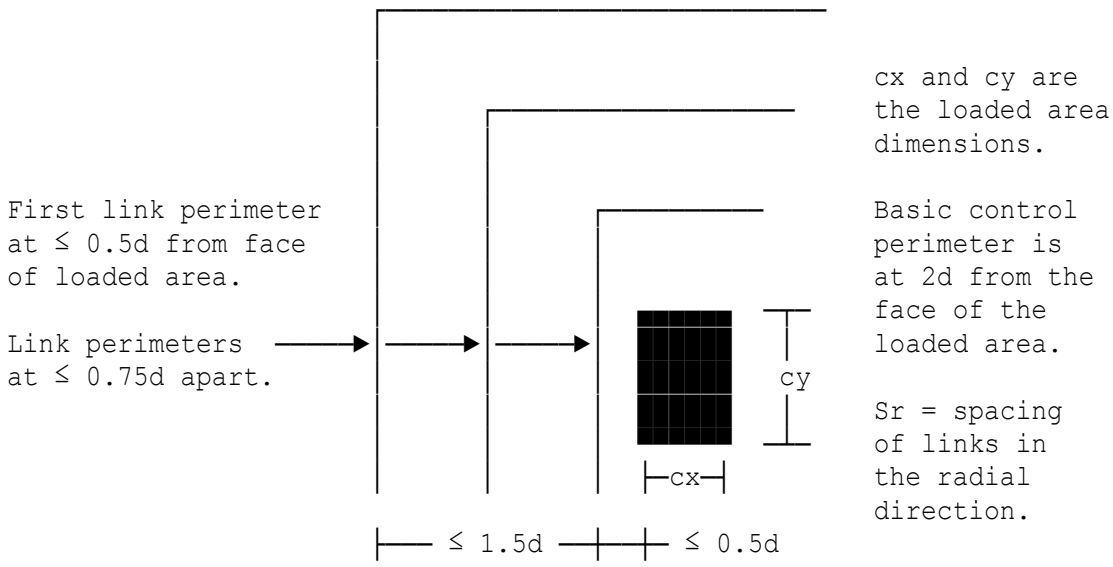

Average effective depth d=170 mm
Dimension of loaded area cx=250 mm
Dimension of loaded area cy=560 mm
As vEd ≤ vRdmax (1.511 N/mm² ≤ 5.712 N/mm²), shear stress at load perimeter is within the maximum punching shear resistance.

Shear stress on the basic control perimeter u1 due to bending

Determine the value of the shear resistance assuming there is no shear reinforcement as per EC2 Clause 6.4.4(1).
Reinforcement ratio in x-dir p1x=0.004
Reinforcement ratio in y-dir p1y=0.0023
Design punching shear resistance vRdc=(0.18/gamc)*k*(100*p1 *fck)^0.333=0.551 N/mm²
Min punching shear resistance vmin=0.035*k^1.5*fck^0.5=0.6261 N/mm²
Hence, the minimum design punching shear resistance governs.
Design punching shear resistance vRdc=0.6261 N/mm²
As vEd ≤ vRdc (0.2936N/mm² ≤ 0.6261 N/mm²), punching shear reinforcement is not necessary for this load case.

(B) Shear stress on plate perimeter due to tie force

An estimate of the shear reinforcement required for tying action will be made, assuming the tie force is carried into the wall through the cast-in plate (no bending checks on the wall will be carried out).
The tie force is a direct force VEd'=FtEd=700 kN
Partial safety factor (concrete) gamc=1.2 (accidental load case)
Load perimeter uo=2*(cx+cy)=1620 mm
Shear stress at load perimeter vEd=VEd'*1000/(uo*d)=2.542 N/mm²
Maximum punching shear resistance vRdmax=0.5*v*fcd=7.14 N/mm²
As vEd ≤ vRdmax (2.542 N/mm² ≤ 7.14 N/mm²), shear stress at load perimeter is within the maximum punching shear resistance.

Check shear stress at control perimeter u1 at 2d from load face

Basic control perimeter at 2d u1=2*(cx+cy)+4*PI*d=3756 mm
Design punching shear resistance vRdc=(0.18/gamc)*k*(100*p1 *fck)^0.333=0.6888 N/mm²
Min punching shear resistance vmin=0.035*k^1.5*fck^0.5=0.6261 N/mm² < 0.6888 kN and hence OK.
As vEd > vRdc (1.096 N/mm² > 0.6888 N/mm²), punching shear reinforcement needs to be provided.

Outer control perimeter where shear links are no longer required

Outer control perimeter Uout=VEd'*1000/(d*vRdc)=5978 mm
Radius to Uout rout=(Uout-lcf)/(2*PI)=693.6 mm
The outer perimeter of shear reinforcement should be at a distance not greater than 1.5d from the outer control perimeter Uout. Radius to outer perimeter of shear reinforcement Outper=rout-1.5*d
=438.6 mm from load face

Shear links on basic control perimeter u1

The partial safety factor for reinf'ment will be taken as gams=1.15.
Spac.inside 2d control perimeter St=255 mm
Spac.outside control perimeter u1 St'=340 mm
Char yield strength of reinft. fyk=500 N/mm²
Diameter of shear reinforcement dial=6 mm
Spacing of links to be used spac=170 mm
Use minimum H 6 (28.27 mm²) legs of links @ 170 mm c/c around perimeter u1 (i.e. in the tangential direction).

Summary of punching shear links

In the following calculation the first perimeter will be taken at 0.5d from the face of the load and subsequent perimeters will be spaced at 0.75d apart.

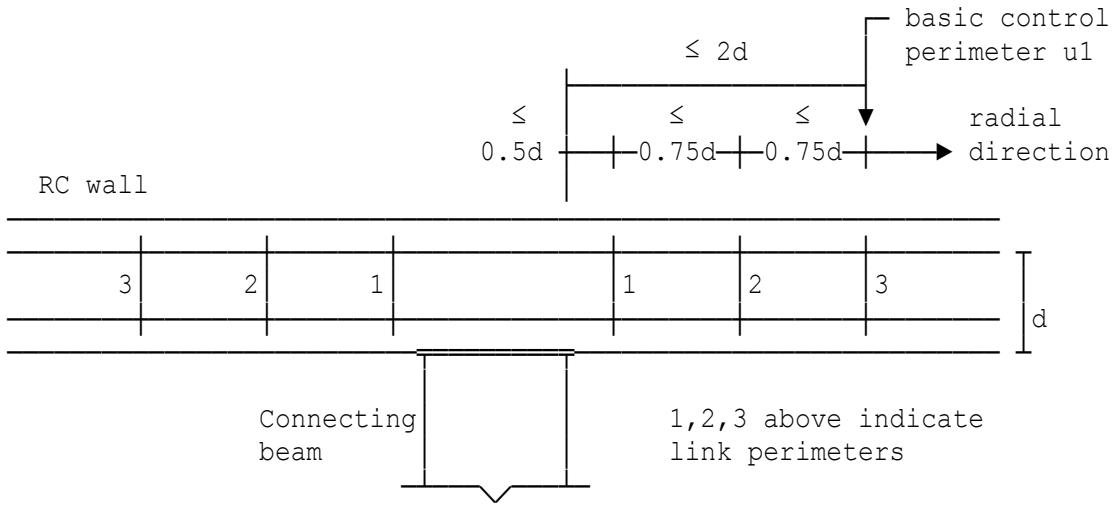

Links on perimeter 1 :
Use minimum H 6 (28.27 mm²) legs of links @ 95 mm c/c in the tangential direction and 125 mm c/c in the radial direction.

Links on perimeter 2 :
Use minimum H 6 (28.27 mm²) legs of links @ 130 mm c/c in the tangential direction and 125 mm c/c in the radial direction.

Links on perimeter 3 :
Use minimum H 6 (28.27 mm²) legs of links @ 170 mm c/c in the tangential direction and 125 mm c/c in the radial direction.

Links on perimeter 4 :
Use minimum H 6 (28.27 mm²) legs of links @ 205 mm c/c in the tangential direction and 125 mm c/c in the radial direction.

DESIGN SUMMARY - nominally pinned joint

Design loads:	**Design shear**	**702 kN**
	Shear resistance	**848.2 kN (stud group)**
	Shear resistance	**141.4 kN (per stud)**
	Design tying force	**700 kN**
	Tension resistance	**1473 kN (bar group)**
	Tension resistance	**213.4 kN (per bar)**
Grade/strength:	**Concrete**	**40 N/mm²**
	Fin plate	**S 275**
	Cast-in plate	**S 355**
	M20 bolts	**8.8**

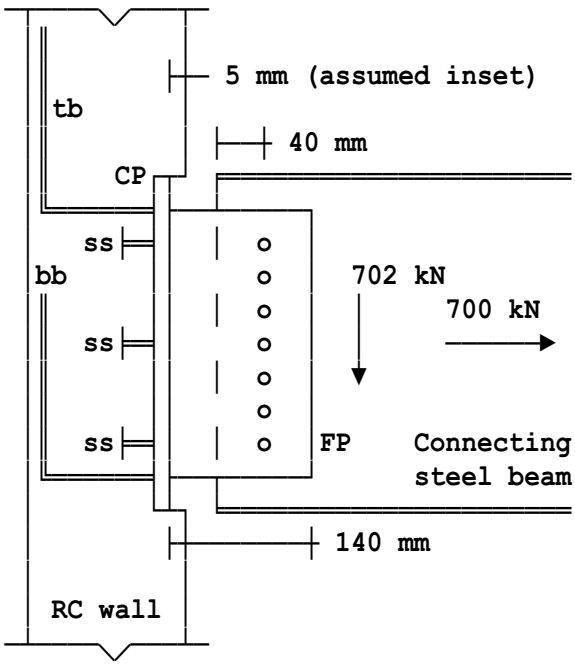

FP = fin plate
CP = cast-in plate
tb = top bars
bb = bottom bars
ss = shear stud

Fin plate:

No. of bolts	**7**
Plate depth	**500 mm**
Plate width	**140 mm**
Plate thickness	**10 mm**

Cast-in plate:

Plate depth	**560 mm**
Plate width	**250 mm**
Plate thickness	**25 mm**

Weld leg length: Fin to cast-in plate — **2 No/8 mm FW need to be provided for connecting the fin plate to cast-in plate to eliminate the possibility of weld failure.**

Stud welding: **It is assumed that studs will be welded using electric arc stud-welding equipment. See SCI publication P300 for further information.**

Weld leg length: Reinforcement — **10 mm FW with two welds round the bar as shown in the diagram. PPFW is a partial penetration fillet weld (FW) in countersunk hole.**

dr=25 mm (bar diameter)
tp=25 mm (plate thickness)

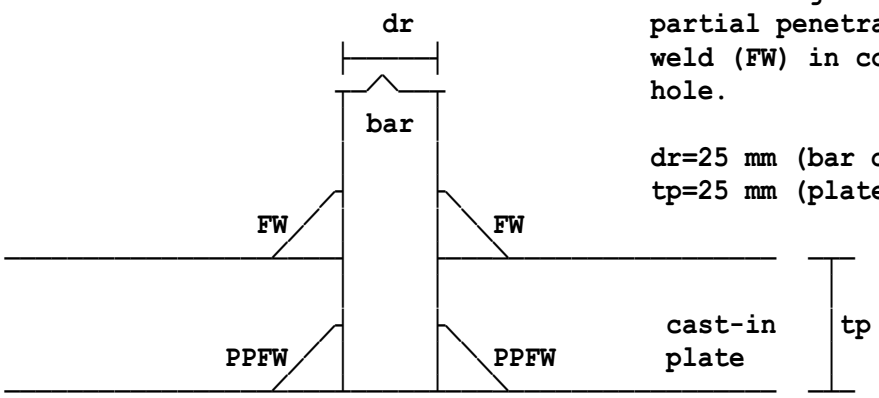

Shear studs:	**No. and diameter**	**6 No/25 mm**
	Height	**100 mm**
	Spacing vertically	**125 mm**
	Spacing horizontally	**130 mm**
	Vertical edge distance	**155 mm**
	Horiz. edge distance	**60 mm**

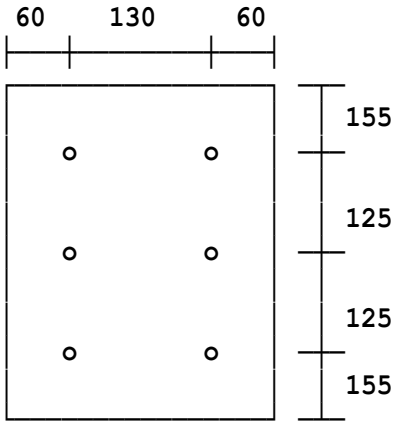

Shear studs:
2x3 shear stud array
Total 6 studs
All dimensions in mm

Reinforcement:	**Top bars**	**2 No/25 mm diameter**
	Bottom bars	**4 No/25 mm diameter**
	Top bar spacing (bsp)	**150 mm (laterally)**
	Bar edge distance (n')	**50 mm (top & bottom bars)**
	Bar end distance (ex)	**70 mm (top & bottom bars)**
	Bend bars mandrel	**266.8 mm diameter**
	Bar anchorage length	**1052 mm**

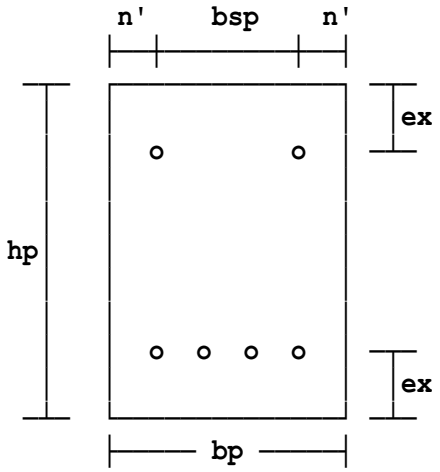

Cast-in plate with a total of 6 bars as shown i.e. 2 top bars and 4 bottom bars.
n'=50 mm (edge distance)
bsp=150 mm (top bars)
bp=250 mm
hp=560 mm
ex=70 mm

Punching shear links are required, refer to the punching shear section of the calculations for diameter and spacing of links.

Location: Ex4 - Cast-in plate design (3x3 Shear stud Array)

General design information

The calculations are in accordance with SCI publication P416 entitled ' The Design of Cast-In Plates ', EC2 Part 1-1, EC2 Part 1-8 and EC3 Part 1-1. Assume nominally pinned connections in simple construction for the building design. Clause references refer to EC2 Part 1-1.

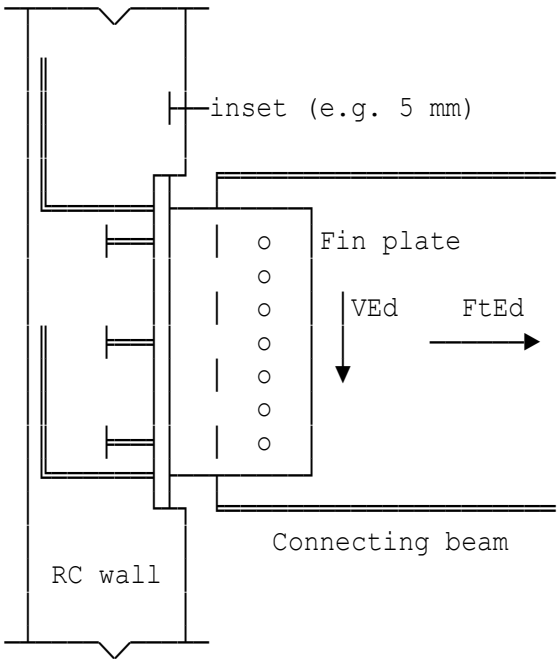

The shear stud resistance check will be as per EC4 Part 1-1. The shear force is transferred to the fin plate by bolts. The cast-in plate and its welded connection to the fin plate will resist the eccentricity moment due to the offset of the bolt group from the face of the plate. The standard arrangement for fin plates in the Green Book (i.e. SCI publication P358) is 10 mm thick fin plate using S275 material, with two 8 mm FW. This will eliminate the possibility of weld failure. The face of the cast-in plate is normally inset to allow for the sliding form.

Both the cast-in plate and fin plate will need site-applied corrosion protection system if corrosion protection of steelwork is specified. Furthermore parts of the connection plate (e.g. the fin plate) will also require fire protection as for the connecting beam.

Design shear (+ve value)	VEd=725 kN
Design tying force (+ve value)	FtEd=700 kN

Fin plate arrangement

No. of rows of M20 bolts	nbr=7
Fin plate depth	hfp=500 mm
Fin plate width	bfp=140 mm

Choose initial shear stud arrangement

Stud diameter	ds=25 mm
Stud height	hs=100 mm
Concrete strength	fck=40 N/mm²
Spacing of studs (vertically)	d1=125 mm
Spacing of studs (horizontally)	d2=100 mm
Edge distance (vertically)	e1=155 mm
Edge distance (horizontally)	e2=60 mm

Initial reinforcement arrangement

Reinforcement welded to cast-in plate for bending and tying resistance will need to be provided.

Bar diameter (top & bottom bars)	dr=25 mm
Total number of bars	nb=6
Tension resistance (bar group)	PtRd=TABLE 3 for nb=6, dr=25 =1473 kN
Design tying force	FtEd=700 kN

As PtRd ≥ FtEd (1473 kN ≥ 700 kN), the tension resistance exceeds the design tying force.

Confirm the shear stud arrangement - EC4 Part 1-1 Cl. 6.6.3.1

Governing group shear resistance	PRd=PRd1=1272 kN

As PRd ≥ VEd (1272 kN ≥ 725 kN), the shear resistance exceeds the design shear and hence studs provided are satisfactory.

Horizontal deviation	ecc=35 mm
Angle β (rotational deviation)	beta=3.81°
Maximum shear in corner stud	Vmax2=SQR((VEd/ns+V2)^2+V1^2)=100 kN
Shear resistance per stud	PRd1=PRd/ns=141 kN

As Vmax2 ≤ PRd1 (100 kN ≤ 141 kN), corner stud shear OK.

Reinforcement arrangement and bar size

(A) Eccentricity moment on the cast-in plate

Maximum eccentricity	ep=150 mm
Design moment due to eccentricity	Md=VEd*ep/1000=109 kNm

(B) Vertical lever arm for tension - compression couple

Design tension force	T=Md/l=264 kN
Design compression force	C=T2=264 kN

(C) Confirm the bar size

Top bar spacing (laterally)	bsp=150 mm

As T ≤ FtRd (264 kN ≤ 427 kN), bars provided are OK.
As FtEd' ≤ FtRd1 (194 kN ≤ 213 kN), maximum tensile force due to eccentricity of loading is less than the bar resistance.

Bending of the cast-in plate

The following calculations will check the resistance of the cast-in plate in bending for the eccentricity moment tension. The resistance model for end-plate from BS EN 1993-1-8 Clause 6.2.4 will be used.

(A) Check Mode 2 failure: bolt failure with yielding of the flange. In this case the bars are substituted for bolts.

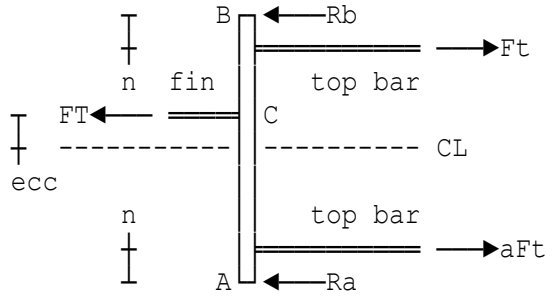

fin = fin plate.
ecc = eccentricity to centre line of cast-in plate.
CL = centre line of the cast-in plate.

PLAN ON CAST-IN PLATE

Equation 1: Mc + Ra((n+(m+ecc)))) - aFt(m+ecc) = 0
Equation 2: Mc + Rb((n+(m-ecc)))) - Ft(m-ecc) = 0

Bar end distance	ex=70 mm
Cast-in plate thickness	tp=25 mm
Force	Ft=FtRd/ntb=213 kN
Moment	Mc=MplRd=13.5 kNm
From equation 2	Rb=(Ft*(m-ecc)-Mc*1E3)/(n+(m-ecc)) =-68.4 kN

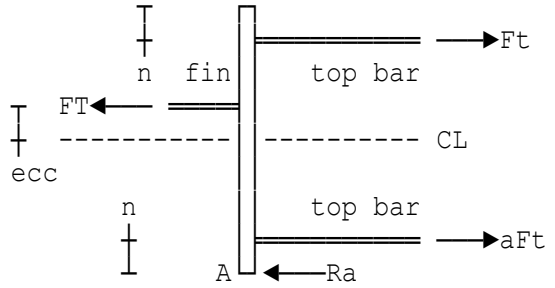

ecc=35 mm
n=79.5 mm
bsp=150 mm

PLAN ON CAST-IN PLATE

Tension resistance	FT=Ft*(a*n+(n+bsp))/(n+(bsp/2+ecc)) =289 kN
Design tension force	T=Md/l=264 kN

As T ≤ FT (264 kN ≤ 289 kN), Mode 2 failure check OK.
Bending moment at fin plate face M=Ft*(m-ecc)/1E3=6.1 kNm
As M ≤ MplRd (6.1 kNm ≤ 13.5 kNm), bending moment at the face of the fin plate is less than the cast-in plate moment resistance.

(B) Check Mode 1 failure: consider a vertical centre line through the cast-in plate and fin plate.

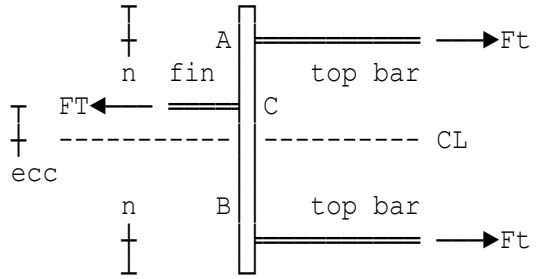

ecc=35 mm
n=79.5 mm
m=63.6 mm

PLAN ON CAST-IN PLATE

Total resistance force FRdT1=FRdT1A+FRdT1B=1375 kN
As T ≤ FRdT1 (264 kN ≤ 1375 kN), Mode 1 failure check OK.

CAST-IN PLATE DETAILS	Depth	560 mm
	Breadth	320 mm
	Thickness	25 mm

(C) Check the cast-in plate under the tying load case
Tension resistance FT=Ft*(a*n+(n+bsp))/com1=333 kN
As FT ≥ 2*FtEd/nb (333 kN ≥ 233 kN), tension resistance exceeds the design tying force.
As M ≤ MplRd (7.02 kNm ≤ 16.7 kNm), bending moment in cast-in plate is less than the cast-in plate moment resistance. Hence the 25 mm thick cast-in plate is acceptable for the tying load case.

Resistance of the combined cast-in plate and fin plate

The resistance of the combined cast-in plate and fin plate to bending in the vertical plane will be considered. The fin plate will need to be checked in bending at the face of the cast-in plate. The nominal eccentricity moment at the back of the plate calculated previously for determining the bar sizes is Md=109 kNm. The latter will be reduced by the assumed plate thickness.
As M ≤ MRd (90.6 kNm ≤ 115 kNm), the reduced bending moment is less than the fin plate moment resistance.

(A) Tying load case
The fin plate and cast-in plate acting as a Tee section spans between the top and bottom tie bars to resist tie forces. The span of the Tee section is the distance between the top & bottom tie bars.

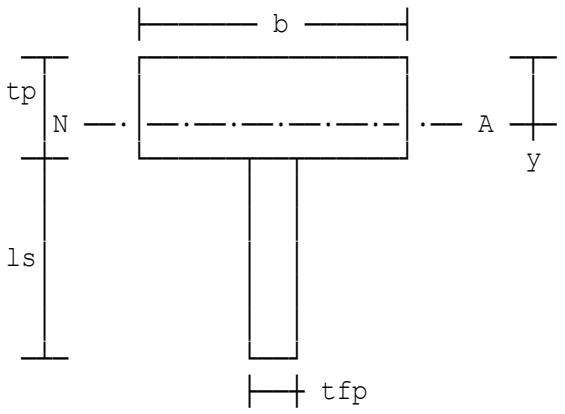

ls = length of stem
y = depth to NA
tp =25 mm
tfp=10 mm

Consider the cast-in plate and fin plate acting as a Tee section.

Assumed Tee section flange width b=150 mm
Length of Tee stem ls=110 mm
Span of Tee section Ltee=0.42 m

(B) Plastic modulus
Plastic modulus of Tee section Z=z1+z2+z3=117671 mm³
Moment resistance MRd=fufp*Z/(gammu*1E6)=43.9 kNm
As M ≤ MRd (36.8 kNm ≤ 43.9 kNm), the bending moment is less than the Tee section moment resistance.

Welding reinforcement to cast-in plate

Bar strength	Ft=245 kN
Partial factor (cast-in plate)	gamm=1.1
Weld coefficient	betaw=0.9
Design strength of weld	fvwd=fup/(betaw*gamm*(3)^0.5)
	=274 N/mm²

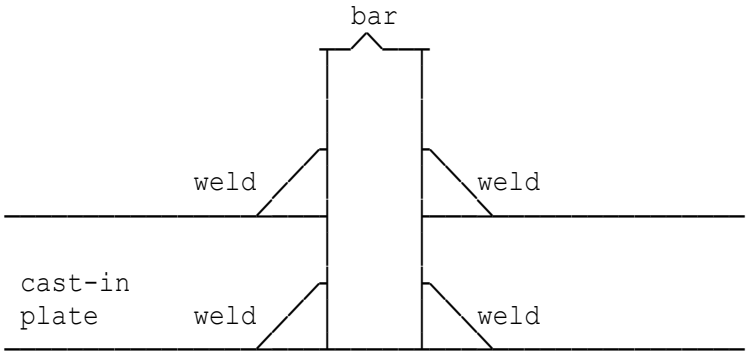

Two welds round the bar will need to be provided as shown in diagram.

Throat length required	a=Ft*1E3/(2*fvwd*PI*dr)=5.7 mm
Weld leg length (reinf'ment)	sr=a/0.7071=8.06 mm
Weld leg length to be adopted	sr=10 mm

PUNCHING SHEAR

The shear stress expression below is as per Clause 6.4.4(2).

$$vEd = \frac{VEd}{ui \cdot d} + \frac{k \cdot MEd}{Wi \cdot d}$$

Consider the bending component only for the eccentricity moment and the direct component only for the tie force as these are separate load cases.

Definitions:
- loaded area refers to the cross-sectional area of the stiff bearing
- load perimeter refers to the stiff bearing plate perimeter
- load face refers to the stiff bearing plate face
- face of the load refers to the face of the stiff bearing plate
- loaded area dimensions refers to stiff bearing area dimensions

(A) Shear stress on plate perimeter due to eccentricity moment

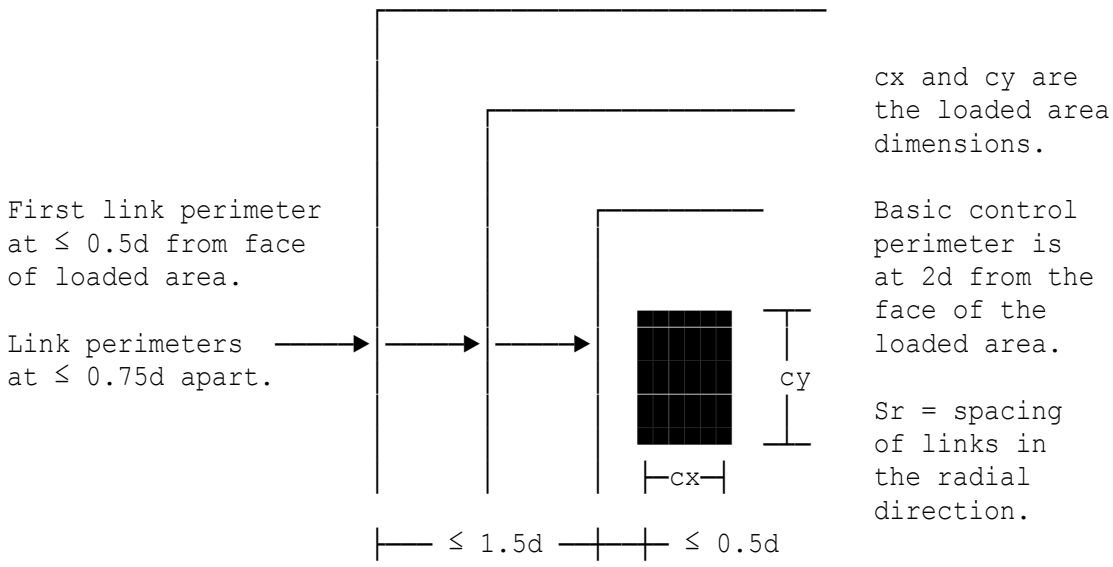

Average effective depth d=170 mm
Dimension of loaded area cx=250 mm
Dimension of loaded area cy=560 mm
As vEd ≤ vRdmax (1.56 N/mm² ≤ 5.712 N/mm²), shear stress at load perimeter is within the maximum punching shear resistance.

Shear stress on the basic control perimeter u1 due to bending

Determine the value of the shear resistance assuming there is no shear reinforcement as per EC2 Clause 6.4.4(1).
Reinforcement ratio in x-dir p1x=0.004
Reinforcement ratio in y-dir p1y=0.0023
Design punching shear resistance vRdc=(0.18/gamc)*k*(100*p1 *fck)^0.333=0.551 N/mm²
Min punching shear resistance vmin=0.035*k^1.5*fck^0.5=0.6261 N/mm²
Hence, the minimum design punching shear resistance governs.
Design punching shear resistance vRdc=0.6261 N/mm²
As vEd ≤ vRdc (0.3032N/mm² ≤ 0.6261 N/mm²), punching shear reinforcement is not necessary for this load case.

(B) Shear stress on plate perimeter due to tie force

An estimate of the shear reinforcement required for tying action will be made, assuming the tie force is carried into the wall through the cast-in plate (no bending checks on the wall will be carried out).
The tie force is a direct force VEd'=FtEd=700 kN
Partial safety factor (concrete) gamc=1.2 (accidental load case)
Load perimeter uo=2*(cx+cy)=1620 mm
Shear stress at load perimeter vEd=VEd'*1000/(uo*d)=2.542 N/mm²
Maximum punching shear resistance vRdmax=0.5*v*fcd=7.14 N/mm²
As vEd ≤ vRdmax (2.542 N/mm² ≤ 7.14 N/mm²), shear stress at load perimeter is within the maximum punching shear resistance.

Check shear stress at control perimeter u1 at 2d from load face

Basic control perimeter at 2d u1=2*(cx+cy)+4*PI*d=3756 mm
Design punching shear resistance vRdc=(0.18/gamc)*k*(100*p1 *fck)^0.333=0.6888 N/mm²
Min punching shear resistance vmin=0.035*k^1.5*fck^0.5=0.6261 N/mm² < 0.6888 kN and hence OK.
As vEd > vRdc (1.096 N/mm² > 0.6888 N/mm²), punching shear reinforcement needs to be provided.

Outer control perimeter where shear links are no longer required

Outer control perimeter Uout=VEd'*1000/(d*vRdc)=5978 mm
Radius to Uout rout=(Uout-lcf)/(2*PI)=693.6 mm
The outer perimeter of shear reinforcement should be at a distance not greater than 1.5d from the outer control perimeter Uout. Radius to outer perimeter of shear reinforcement Outper=rout-1.5*d
=438.6 mm from load face

Shear links on basic control perimeter u1

The partial safety factor for reinf'ment will be taken as gams=1.15.
Spac.inside 2d control perimeter St=255 mm
Spac.outside control perimeter u1 St'=340 mm
Char yield strength of reinft. fyk=500 N/mm²
Diameter of shear reinforcement dial=6 mm
Spacing of links to be used spac=170 mm
Use minimum H 6 (28.27 mm²) legs of links @ 170 mm c/c around perimeter u1 (i.e. in the tangential direction).

Summary of punching shear links

In the following calculation the first perimeter will be taken at 0.5d from the face of the load and subsequent perimeters will be spaced at 0.75d apart.

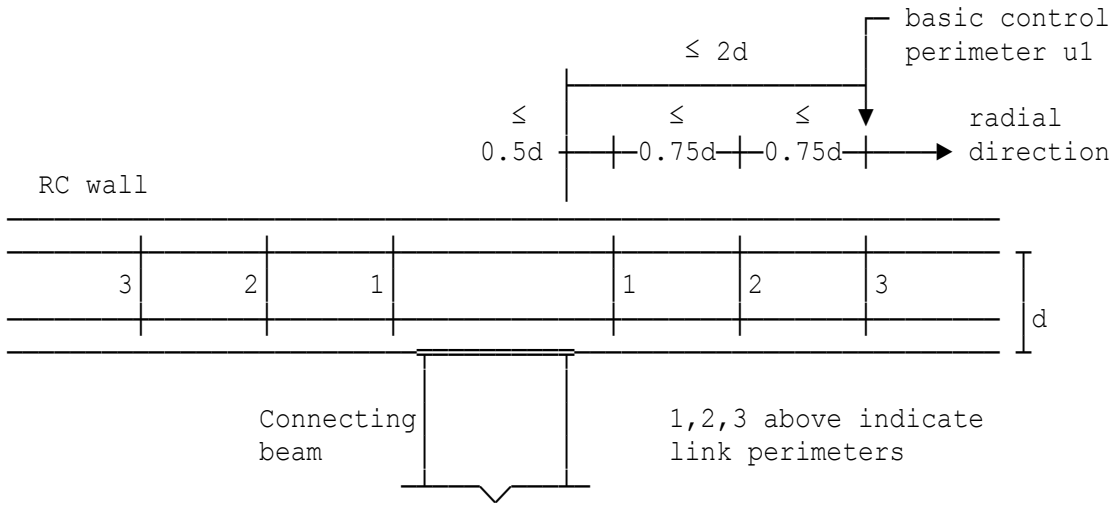

Links on perimeter 1 :
Use minimum H 6 (28.27 mm²) legs of links @ 95 mm c/c in the tangential direction and 125 mm c/c in the radial direction.

Links on perimeter 2 :
Use minimum H 6 (28.27 mm²) legs of links @ 130 mm c/c in the tangential direction and 125 mm c/c in the radial direction.

Links on perimeter 3 :
Use minimum H 6 (28.27 mm²) legs of links @ 170 mm c/c in the tangential direction and 125 mm c/c in the radial direction.

Links on perimeter 4 :
Use minimum H 6 (28.27 mm²) legs of links @ 205 mm c/c in the tangential direction and 125 mm c/c in the radial direction.

DESIGN SUMMARY - nominally pinned joint

Design loads:	**Design shear**	**725 kN**
	Shear resistance	**1272 kN (stud group)**
	Shear resistance	**141.4 kN (per stud)**
	Design tying force	**700 kN**
	Tension resistance	**1473 kN (bar group)**
	Tension resistance	**213.4 kN (per bar)**
Grade/strength:	**Concrete**	**40 N/mm²**
	Fin plate	**S 275**
	Cast-in plate	**S 355**
	M20 bolts	**8.8**

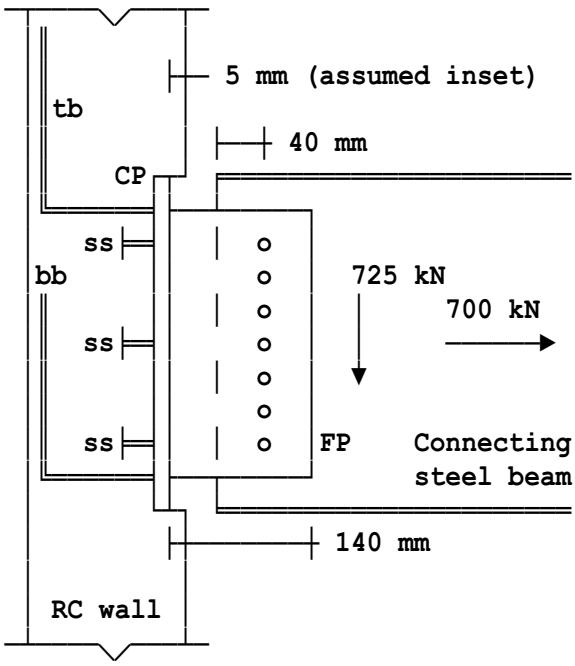

FP = fin plate
CP = cast-in plate
tb = top bars
bb = bottom bars
ss = shear stud

Fin plate:

No. of bolts	**7**
Plate depth	**500 mm**
Plate width	**140 mm**
Plate thickness	**10 mm**

Cast-in plate:

Plate depth	**560 mm**
Plate width	**320 mm**
Plate thickness	**25 mm**

Weld leg length: Fin to cast-in plate — **2 No/8 mm FW need to be provided for connecting the fin plate to cast-in plate to eliminate the possibility of weld failure.**

Stud welding: **It is assumed that studs will be welded using electric arc stud-welding equipment. See SCI publication P300 for further information.**

Weld leg length: Reinforcement — **10 mm FW with two welds round the bar as shown in the diagram. PPFW is a partial penetration fillet weld (FW) in countersunk hole.**

dr=25 mm (bar diameter)
tp=25 mm (plate thickness)

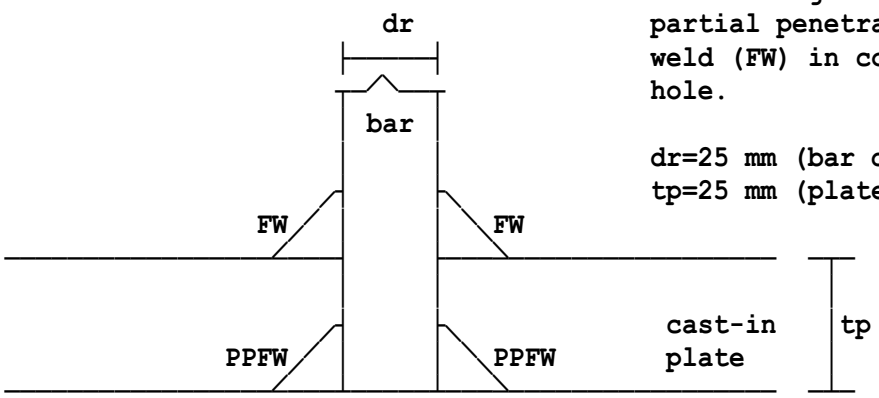

Shear studs:	**No. and diameter**	**9 No/25 mm**
	Height	**100 mm**
	Spacing vertically	**125 mm**
	Spacing horizontally	**100 mm**
	Vertical edge distance	**155 mm**
	Horiz. edge distance	**60 mm**

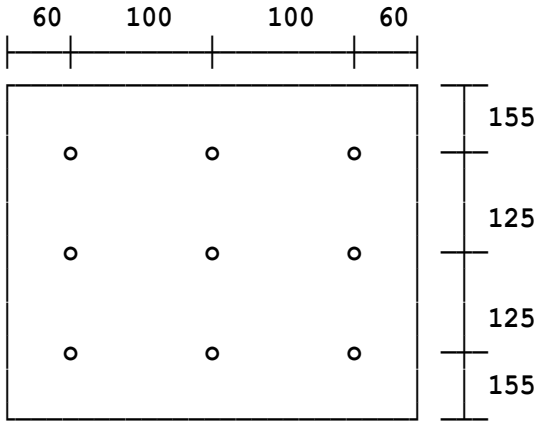

Shear studs:
3x3 shear stud array
Total 9 studs
All dimensions in mm

Reinforcement:	**Top bars**	**2 No/25 mm diameter**
	Bottom bars	**4 No/25 mm diameter**
	Top bar spacing (bsp)	**150 mm (laterally)**
	Bar edge distance (n')	**85 mm (top & bottom bars)**
	Bar end distance (ex)	**70 mm (top & bottom bars)**
	Bend bars mandrel	**266.8 mm diameter**
	Bar anchorage length	**1052 mm**

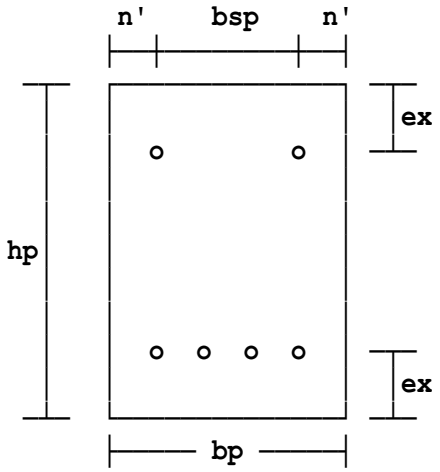

Cast-in plate with a total of 6 bars as shown i.e. 2 top bars and 4 bottom bars.
n'=85 mm (edge distance)
bsp=150 mm (top bars)
bp=320 mm
hp=560 mm
ex=70 mm

Punching shear links are required, refer to the punching shear section of the calculations for diameter and spacing of links.

Location: Ex1 - Default example

Load bearing stiffener

Calculations are in accordance with BS 5950-1:2000, Clause 4.5.

Force applied through flange Fc=639.7 kN

Section properties

457 x 191 x 74 UB.
Young's Modulus E=205 kN/mm²

Check for bearing on the web - Clause 4.5.2.1

Stiff bearing length b1=52.8 mm
Design strength pyw=275 N/mm²
Bearing capacity of web Pbw=(b1+n*k)*t*pyw/10^3=436.34 kN
Since Fc > Pbw (639.7 kN > 436.34 kN) a bearing stiffener is required.

Check for buckling of the web - Clause 4.5.3.1

Stiff bearing length b1=52.8 mm
Buckling resistance Px=25*e*t/((b1+n*k)*d)^0.5*Pbw
=366.24 kN
Since Fc > Px (639.7 kN > 366.24 kN) load carrying stiffener will be required to prevent the web from buckling.

Stiffener design

Assuming initially that the stiffener will be less than or equal to 16 mm thick, two stiffeners are to be used and allowing for a cut-back of 13 mm at the root of the member.
Design strength pys=275 N/mm²
Minimum area of stiffener Asmin=Fs*10^3/pys=739.48 mm²
Allowable stiffener outstand out=13*ts*e=195 mm
As bs < out (80 mm < 195 mm) the actual stiffener outstand is less than the allowable, hence OK.
The effective section of the stiffener, is shown.

Check stiffener as a bearing stiffener

Force on bearing stiffener FB=Fc-Pbw=203.36 kN
Bearing capacity of stiffener PB=pys*Astiff/10^3=552.75 kN
Since FB ≥ PB, stiffener is OK for bearing.

Connection of stiffeners to web

Effective length of weld	lw=D-2*(cut+T+0.7*t)=389.4 mm
Weld size	s=6 mm
Capacity of weld	pws=0.7*s*pw=924 N/mm

6 mm weld is suitable.

DESIGN SUMMARY	**457 x 191 x 74 UB**	
	Steel Grade	**S 275**
	External load	**639.7 kN**
	Local capacity	**436.3 kN**
	Buckling capacity	**1328 kN**
STIFFENER DETAILS	**Plate**	**2No/80 mm x 15 mm**
	Welding	**4No/6 mm FW's**
	Both flanges restrained against rotation in plane of stiffener.	

Location: Ex2 - End stiffener (Plate Girder)

Load bearing stiffener

Calculations are in accordance with BS 5950-1:2000, Clause 4.5.

Force applied through flange Fc=1560 kN

Section properties

Plate Girder
Depth of section D=1500 mm
Width of section B=450 mm
Thickness of flange T=40 mm
Thickness of web t=15 mm
Dimensions (mm): D=1500 B=450 T=40 t=15
Young's Modulus E=205 kN/mm²

Check for bearing on the web - Clause 4.5.2.1

Stiff bearing length b1=75 mm
from the end of stiff bearing be=0 mm
Design strength pyw=275 N/mm²
Bearing capacity of web Pbw=(b1+n*k)*t*pyw/10^3=639.38 kN
Since Fc > Pbw (1560 kN > 639.38 kN) a bearing stiffener is required.

Check for buckling of the web - Clause 4.5.3.1

Stiff bearing length b1=75 mm
distance ae=0 mm
Buckling resistance Px=px*25*e*t/((b1+n*k)*d)^0.5*Pbw
=255.53 kN
Since Fc > Px (1560 kN > 255.53 kN) load carrying stiffener will be required to prevent the web from buckling.

Stiffener design

Assuming initially that the stiffener will be less than or equal to 16 mm thick, two stiffeners are to be used and allowing for a cut-back of 15 mm at the root of the member.
Design strength pys=275 N/mm²
Minimum area of stiffener Asmin=Fs*10^3/pys=3347.7 mm²
Allowable stiffener outstand out=13*ts*e=208 mm
As bs < out (150 mm < 208 mm) the actual stiffener outstand is less than the allowable, hence OK.
The effective section of the stiffener, is shown.

Check stiffener as a bearing stiffener

Force on bearing stiffener FB=Fc-Pbw=920.63 kN
Bearing capacity of stiffener PB=pys*Astiff/10^3=1188 kN
Since FB ≥ PB, stiffener is OK for bearing.

Connection of stiffeners to web

Effective length of weld lw=D-2*(cut+T+0.7*t)=1369 mm
Weld size s=6 mm
Capacity of weld pws=0.7*s*pw=924 N/mm
6 mm weld is suitable.

PLATE GIRDER
DESIGN SUMMARY **1500 mm x 450 mm Section**
Steel Grade S 275
External load 1560 kN
Local capacity 639.4 kN
Buckling capacity 2281 kN

STIFFENER DETAILS **Plate 315 mm x 16 mm**
Welding 2No/6 mm FW's
Both flanges restrained against rotation in plane of stiffener.

Location: Ex3 - Check load bearing stiffener (End stiffener)

Load bearing stiffener

Calculations are in accordance with BS 5950-1:2000, Clause 4.5.

Force applied through flange Fc=800 kN

Section properties

254 x 254 x 73 UC.
Young's Modulus E=205 kN/mm²

Stiffener design

Assuming initially that the stiffener will be less than or equal to 16 mm thick, two stiffeners are to be used and allowing for a cut-back of 15 mm at the root of the member.

Design strength	pys=275 N/mm²
Design strength	pyw=275 N/mm²
Bearing capacity	Pbw=(b1+2*k)*t*pyw/10^3=127.24 kN
Minimum area of stiffener	Asmin=Fs*10^3/pys=2446.4 mm²
Allowable stiffener outstand	out=13*ts*e=208 mm

As bs < out (100 mm < 208 mm) the actual stiffener outstand is less than the allowable, hence OK.
The effective section of the stiffener, is shown.

Check stiffener as a bearing stiffener

Assuming a stiff bearing length	b1=0 mm
Bearing capacity of web	Pbw=(b1+n*k)*t*pyw/10^3=254.47 kN
Force on bearing stiffener	FB=Fc-Pbw=545.53 kN
Bearing capacity of stiffener	PB=pys*Astiff/10^3=748 kN

Since FB ≥ PB, stiffener is OK for bearing.

Connection of stiffeners to web

Effective length of weld	lw=D-2*(cut+T+0.7*t)=183.66 mm
Weld size	s=8 mm
Capacity of weld	pws=0.7*s*pw=1232 N/mm

8 mm weld is suitable.

DESIGN SUMMARY	**254 x 254 x 73 UC**	
	Steel Grade	**S 275**
	External load	**800 kN**
STIFFENER DETAILS	**Plate**	**2No/100 mm x 16 mm**
	Welding	**4No/8 mm FW's**
	Flanges not restrained against rotation.	

Location: Ex1 - Default example

Load bearing stiffener

Calculations are in accordance with BS EN 1993-1-1:2005. References to EC3 Part 1-5 and EC3 Part 1-8 are also made where appropriate.

Force applied through flange VzEd=639.7 kN

Section properties

457 x 191 x 74 UKB
Stiff bearing length ss=52.8 mm
Stiff bearing position C=0 mm

Check for bearing on the web

Design strength of web fyw=275 N/mm²
Bearing resistance of web FRdbr=(ss+n*k)*tw*fyw/(gamM0*10^3)
=436.34 kN
Since VzEd > FRdbr (639.7 kN > 436.34 kN) a bearing stiffener is required.

Stiffener design

Assuming initially that the stiffener will be less than or equal to 16 mm thick, two stiffeners are to be used and allowing for a cut-back of 13 mm at the root of the member.
Design strength of stiffener fys=275 N/mm²
Assumed stiffener thickness ts=15 mm
Assumed stiffener width bs=80 mm
Allowable stiffener outstand out=13*ts*e=180.26 mm
As bs ≤ out (80 mm ≤ 180.26 mm) the actual stiffener outstand is less than the allowable, hence OK.
The effective section of the stiffener, is shown.

Check stiffener as a bearing stiffener

Force on bearing stiffener FEdB=VzEd-FRdbr=203.36 kN
Bearing resistance of stiffener FRdB=fys*Astiff/(gamM0*10^3)=552.75 kN
Since FEdB ≥ FRdB, stiffener is OK for bearing.

Connection of stiffeners to web

Design strength of fillet weld fvwd=fu/(SQR(3)*betw*gamM2)
=222.79 N/mm²
Design load on weld FwEd=FEdB/(4*lw)=0.13056 kN/mm
Fillet weld size (leg length) s=6 mm
Design weld resistance FwRd=0.7*s*fvwd/1000=0.93571 kN/mm
Hence, 6 mm FW's are suitable and will be adopted.

DESIGN SUMMARY	**457 x 191 x 74 UB**	
	Steel Grade	**S 275**
	External load	**639.7 kN**
	Bearing resistance	**436.3 kN**
	Buckling resistance	**1278 kN**
STIFFENER DETAILS	**Plate**	**2No/80 mm x 15 mm**
	Welding	**4No/6 mm FW's**
	Both flanges restrained against rotation in plane of stiffener.	

Location: Ex2 - End stiffener (Plate Girder)

Load bearing stiffener

Calculations are in accordance with BS EN 1993-1-1:2005. References to EC3 Part 1-5 and EC3 Part 1-8 are also made where appropriate.

Force applied through flange VzEd=1560 kN

Section properties

Plate Girder
Depth of section h=1500 mm
Width of section b=450 mm
Thickness of flange tf=40 mm
Thickness of web tw=15 mm
Dimensions (mm) : h=1500 b=450 tf=40 tw=15
Depth between flanges: hw=h-2*tf=1420 mm
Stiff bearing length ss=75 mm
Stiff bearing position C=0 mm

Check for bearing on the web

Distance to nearer end of the member from
the end of stiff bearing be=0 mm
Design strength of web fyw=275 N/mm²
Bearing resistance of web FRdbr=(ss+n*k)*tw*fyw/(gamM0*10^3)
=639.38 kN
Since VzEd > FRdbr (1560 kN > 639.38 kN) a bearing stiffener is required.

Stiffener design

Assuming initially that the stiffener will be less than or equal to 16 mm thick, two stiffeners are to be used and allowing for a cut-back of 15 mm at the root of the member.
Design strength of stiffener fys=275 N/mm²
Assumed stiffener thickness ts=16 mm
Assumed stiffener width bs=150 mm
Allowable stiffener outstand out=13*ts*e=192.28 mm
As bs ≤ out (150 mm ≤ 192.28 mm) the actual stiffener outstand is less than the allowable, hence OK.
The effective section of the stiffener, is shown.

Check stiffener as a bearing stiffener

Force on bearing stiffener FEdB=VzEd-FRdbr=920.63 kN
Bearing resistance of stiffener FRdB=fys*Astiff/(gamM0*10^3)=1188 kN
Since FEdB ≥ FRdB, stiffener is OK for bearing.

Connection of stiffeners to web

Design strength of fillet weld fvwd=fu/(SQR(3)*betw*gamM2)
=222.79 N/mm²
Design load on weld FwEd=FEdB/(2*lw)=0.33624 kN/mm
Fillet weld size (leg length) s=6 mm
Design weld resistance FwRd=0.7*s*fvwd/1000=0.93571 kN/mm
Hence, 6 mm FW's are suitable and will be adopted.

PLATE GIRDER

DESIGN SUMMARY	**1500 mm x 450 mm Section**	
	Steel Grade	**S 275**
	External load	**1560 kN**
	Bearing resistance	**639.4 kN**
	Buckling resistance	**2050 kN**
STIFFENER DETAILS	**Plate**	**315 mm x 16 mm**
	Welding	**2No/6 mm FW's**
	Both flanges restrained against rotation in plane of stiffener.	

Location: Ex3 - Check load bearing stiffener (End stiffener)

Load bearing stiffener

Calculations are in accordance with BS EN 1993-1-1:2005. References to EC3 Part 1-5 and EC3 Part 1-8 are also made where appropriate.

Force applied through flange VzEd=800 kN

Section properties

254 x 254 x 73 UKC

Stiffener design

Assuming initially that the stiffener will be less than or equal to 16 mm thick, two stiffeners are to be used and allowing for a cut-back of 15 mm at the root of the member.

Design strength of stiffener fys=275 N/mm²
Design strength of web fyw=275 N/mm²
Bearing resistance FRdbr=(ss+2*k)*tw*fyw/(gamM0*10^3)
=127.24 kN
Assumed stiffener thickness ts=16 mm
Assumed stiffener width bs=100 mm
Allowable stiffener outstand out=13*ts*e=192.28 mm
As bs ≤ out (100 mm ≤ 192.28 mm) the actual stiffener outstand is less than the allowable, hence OK.
The effective section of the stiffener, is shown.

Check stiffener as a bearing stiffener

Assuming a stiff bearing length ss=0 mm
Permissible stress of web fyw=275 N/mm²
Bearing resistance of web FRdbr=(ss+n*k)*tw*fyw/(gamM0*10^3)
=254.47 kN
Force on bearing stiffener FEdB=VzEd-FRdbr=545.53 kN
Bearing resistance of stiffener FRdB=fys*Astiff/(gamM0*10^3)=748 kN
Since FEdB ≥ FRdB, stiffener is OK for bearing.

Connection of stiffeners to web

Design strength of fillet weld fvwd=fu/(SQR(3)*betw*gamM2)
=222.79 N/mm²
Design load on weld FwEd=FEdB/(4*lw)=0.74258 kN/mm
Fillet weld size (leg length) s=8 mm
Design weld resistance FwRd=0.7*s*fvwd/1000=1.2476 kN/mm
Hence, 8 mm FW's are suitable and will be adopted.

DESIGN SUMMARY	**254 x 254 x 73 UC**	
	Steel Grade	**S 275**
	External load	**800 kN**
STIFFENER DETAILS	**Plate**	**2No/100 mm x 16 mm**
	Welding	**4No/8 mm FW's**
	Both flanges restrained against rotation in plane of stiffener.	

Location: Ex1 - Equal area in parent section flange

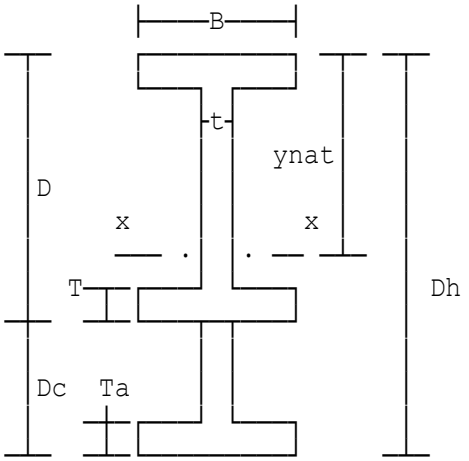

Properties of haunched section

Universal beam or column section with a haunch.
Parent section and haunch are assumed to be of the same steel grade.
Calculations relating to the welding of the haunch to the parent section are not included.

Section properties - Parent section

406 x 178 x 54 UB.
Dimensions (mm): D=402.6 B=177.7 t=7.7 T=10.9 r=10.2
Properties (cm): Iz=18700 Iy=1020 Sz=1060 Sy=178 J=23.1
A=69
Elastic modulus about major axis Z=Iz/(D/20)=928.96 cm³

Section properties - haunch cutting

457 x 191 x 67 UB.
Dimensions (mm): Da=453.4 Ba=189.9 ta=8.5 Ta=12.7 ra=10.2
Properties (cm): Aa=85.5
Depth between root fillets da=Da-2*(ra+Ta)=407.6 mm

Combined properties

Overall depth of section Dh=750 mm
Depth of haunch section Dc=Dh-D=347.4 mm
Neutral axis depth to top flange ynat=SigZ/At=39.641 cm
Neutral axis depth to bot.flange ynab=Dh/10-ynat=35.359 cm

Location: Ex2 - Equal area in haunch

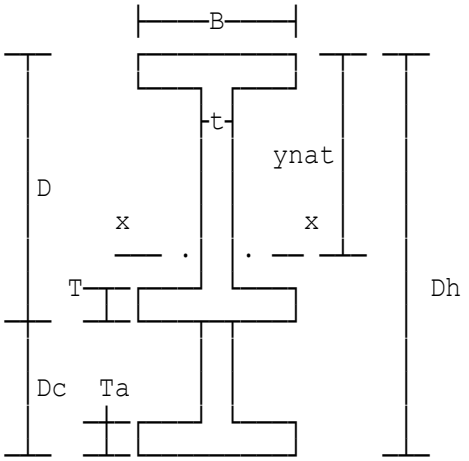

Properties of haunched section

Universal beam or column section
with a haunch.
Parent section and haunch are
assumed to be of the same steel grade.
Calculations relating to the
welding of the haunch to the
parent section are not included.

Section properties - Parent section

406 x 178 x 54 UB.
Dimensions (mm): D=402.6 B=177.7 t=7.7 T=10.9 r=10.2
Properties (cm): Iz=18700 Iy=1020 Sz=1060 Sy=178 J=23.1
A=69
Elastic modulus about major axis Z=Iz/(D/20)=928.96 cm³

Section properties - haunch cutting

533 x 210 x 101 UB.
Dimensions (mm): Da=536.7 Ba=210 ta=10.8 Ta=17.4 ra=12.7
Properties (cm): Aa=129
Depth between root fillets da=Da-2*(ra+Ta)=476.5 mm

Combined properties

Overall depth of section Dh=780 mm
Depth of haunch section Dc=Dh-D=377.4 mm
Neutral axis depth to top flange ynat=SigZ/At=44.965 cm
Neutral axis depth to bot.flange ynab=Dh/10-ynat=33.035 cm

Location: Ex3 - Equal area in parent section web

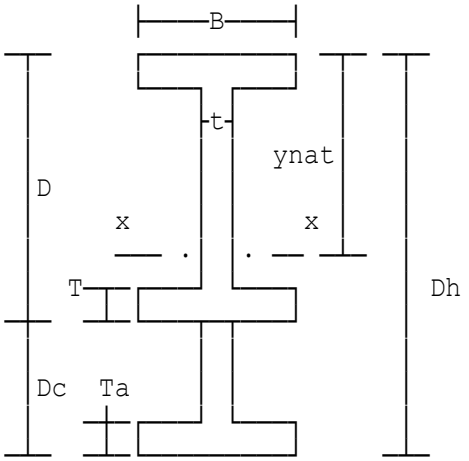

Properties of haunched section

Universal beam or column section
with a haunch.
Parent section and haunch are
assumed to be of the same steel grade.
Calculations relating to the
welding of the haunch to the
parent section are not included.

Section properties - Parent section

406 x 178 x 54 UB.
Dimensions (mm): D=402.6 B=177.7 t=7.7 T=10.9 r=10.2
Properties (cm): Iz=18700 Iy=1020 Sz=1060 Sy=178 J=23.1
A=69
Elastic modulus about major axis Z=Iz/(D/20)=928.96 cm³

Section properties - haunch cutting

356 x 171 x 45 UB.
Dimensions (mm): Da=351.4 Ba=171.1 ta=7 Ta=9.7 ra=10.2
Properties (cm): Aa=57.3
Depth between root fillets da=Da-2*(ra+Ta)=311.6 mm

Combined properties

Overall depth of section Dh=550 mm
Depth of haunch section Dc=Dh-D=147.4 mm
Neutral axis depth to top flange ynat=SigZ/At=28.973 cm
Neutral axis depth to bot.flange ynab=Dh/10-ynat=26.027 cm

Location: Ex1 - Equal area in parent section flange

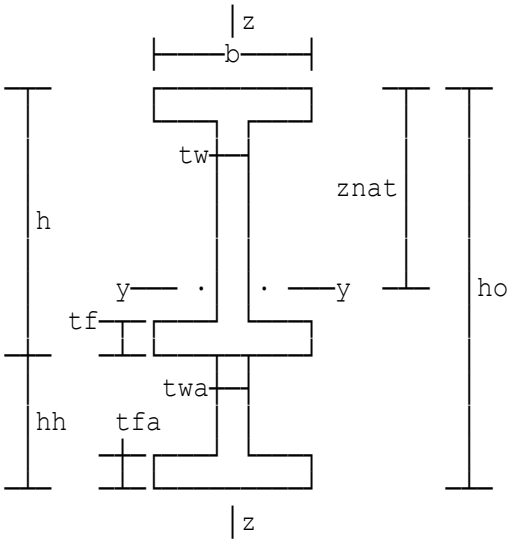

Properties of haunched section

Universal beam or column section with a haunch.

Parent section and haunch are assumed to be of the same steel grade.

Calculations relating to the welding of the haunch to the parent section are not included.

Section properties - parent section

```
406 x 178 x 54 UKB
Dimensions (mm): h=402.6 b=177.7 tw=7.7 tf=10.9 r=10.2
Properties (cm): Iy=18700 Iz=1020 Wply=1060 Wplz=178
                 It=23.1 A=69 Wely=928.96
```

Section properties - haunch cutting

```
457 x 191 x 67 UKB
Dimensions (mm): ha=453.4 ba=189.9 twa=8.5 tfa=12.7 ra=10.2
Properties (cm): Aa=85.5
Depth between root fillets        da=ha-2*(ra+tfa)=407.6 mm
```

Combined properties

```
Overall depth of section          ho=750 mm
Depth of haunch section           hh=ho-h=347.4 mm
Neutral axis depth to top flange znat=SigZ/At=39.641 cm
Neutral axis depth to bot.flange znab=ho/10-znat=35.359 cm
```

Location: Ex2 - Equal area in haunch

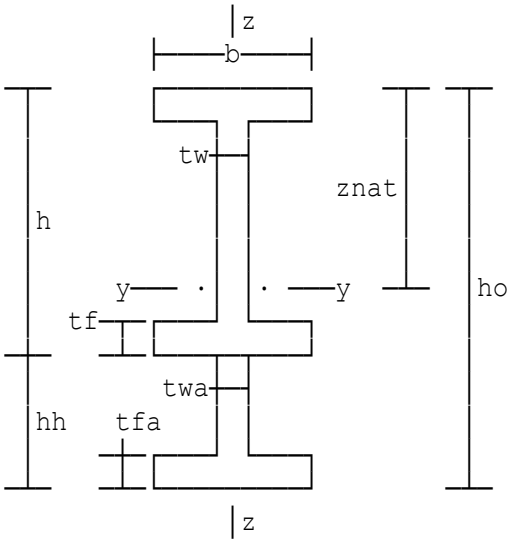

Properties of haunched section

Universal beam or column section with a haunch.

Parent section and haunch are assumed to be of the same steel grade.

Calculations relating to the welding of the haunch to the parent section are not included.

Section properties - parent section

406 x 178 x 54 UKB
Dimensions (mm): h=402.6 b=177.7 tw=7.7 tf=10.9 r=10.2
Properties (cm): Iy=18700 Iz=1020 Wply=1060 Wplz=178
It=23.1 A=69 Wely=928.96

Section properties - haunch cutting

533 x 210 x 101 UKB
Dimensions (mm): ha=536.7 ba=210 twa=10.8 tfa=17.4 ra=12.7
Properties (cm): Aa=129
Depth between root fillets da=ha-2*(ra+tfa)=476.5 mm

Combined properties

Overall depth of section ho=780 mm
Depth of haunch section hh=ho-h=377.4 mm
Neutral axis depth to top flange znat=SigZ/At=44.965 cm
Neutral axis depth to bot.flange znab=ho/10-znat=33.035 cm

Location: Ex3 - Equal area in parent section web

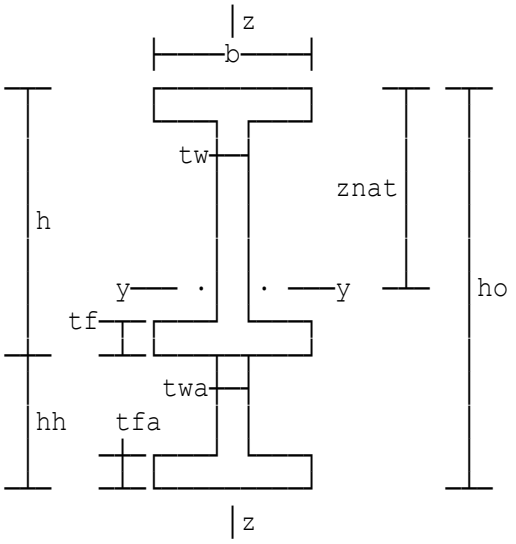

Properties of haunched section

Universal beam or column section with a haunch.

Parent section and haunch are assumed to be of the same steel grade.

Calculations relating to the welding of the haunch to the parent section are not included.

Section properties - parent section

```
406 x 178 x 54 UKB
Dimensions (mm): h=402.6 b=177.7 tw=7.7 tf=10.9 r=10.2
Properties (cm): Iy=18700 Iz=1020 Wply=1060 Wplz=178
                 It=23.1 A=69 Wely=928.96
```

Section properties - haunch cutting

```
356 x 171 x 45 UKB
Dimensions (mm): ha=351.4 ba=171.1 twa=7 tfa=9.7 ra=10.2
Properties (cm): Aa=57.3
Depth between root fillets        da=ha-2*(ra+tfa)=311.6 mm
```

Combined properties

```
Overall depth of section          ho=550 mm
Depth of haunch section           hh=ho-h=147.4 mm
Neutral axis depth to top flange znat=SigZ/At=28.973 cm
Neutral axis depth to bot.flange znab=ho/10-znat=26.027 cm
```

Location: Example from 'Structural Steelwork' by MacGinley

Bolted connection

Calculations in accordance with BS5950-1:2000. Fasteners are subject to both shear and torsion. Fasteners are in the plane of the load.

Axial force	Fv=0 kN
Eccentric force	F=212 kN
Eccentricity of force	ecc=525 mm
Bolt diameter	bd=24 mm
Bolt pitch (vertically)	p=70 mm
Distance between bolt centres	g=500 mm

BOLT SUMMARY

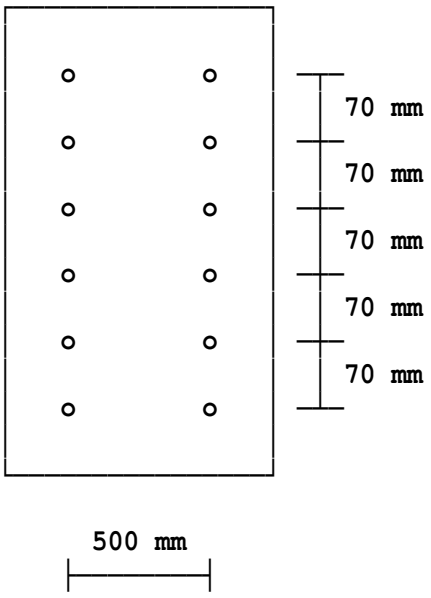

Bolt diameter	**24 mm**
Number	**12**
Bolt grade	**4.6**

Location: Example preloaded bolts shear and torsion

Bolted connection

Calculations in accordance with BS5950-1:2000. Fasteners are subject to both shear and torsion. Fasteners are in the plane of the load.

Axial force	Fv=0 kN
Eccentric force	F=280 kN
Eccentricity of force	ecc=650 mm
Bolt diameter	bd=20 mm
Bolt pitch (vertically)	p=70 mm
Distance between bolt centres	S1=120 mm
Distance between bolt centres	S2=90 mm
Slip factor for preloaded bolts	mu=0.5
Coefficient for type of hole	Ks=1

BOLT SUMMARY

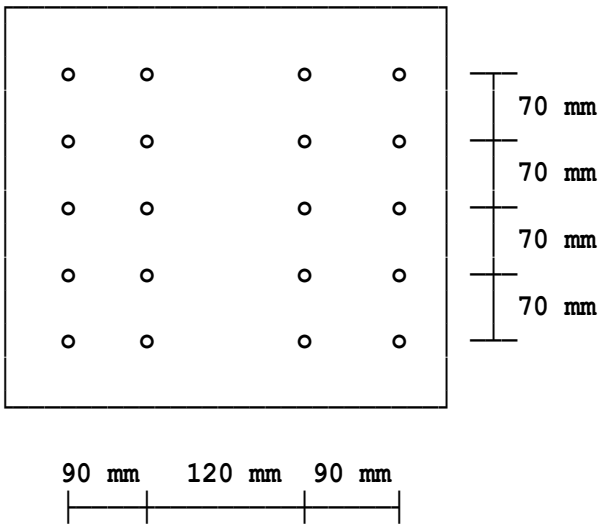

Bolt diameter	**20 mm**
Number	**20**
Bolt grade	**HSFG**
	Higher grade to BS4395-2
Nut grade	**12**

Location: Example HSFG not preloaded shear and tension

Bolted connection

Calculations in accordance with BS5950-1:2000. Fasteners are subject to both shear and tension. Fasteners are not in the plane of the load.

Applied shear force	Fv=147 kN
Applied moment	M=257 kNm
Bolt diameter	bd=24 mm
Bolt pitch (vertically)	p=90 mm
Distance between bolt centres	g=140 mm
below the bottom bolts	a=60 mm

BOLT SUMMARY

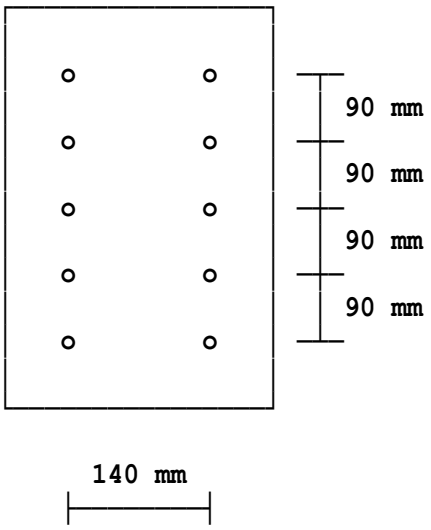

Bolt diameter	**24 mm**
Number	**10**
Bolt grade	**HSFG**
	General grade to BS4395-1
Nut grade	**10**

Location: Example HSFG preloaded shear and tension

Bolted connection

Calculations in accordance with BS5950-1:2000. Fasteners are subject to both shear and tension. Fasteners are not in the plane of the load.

Applied shear force	Fv=247 kN
Applied moment	M=657 kNm
Bolt diameter	bd=24 mm
Bolt pitch (vertically)	p=90 mm
Distance between bolt centres	S1=100 mm
Distance between bolt centres	S2=140 mm
below the bottom bolts	a=60 mm
Slip factor for preloaded bolts	mu=0.5
Coefficient for type of hole	Ks=1

BOLT SUMMARY

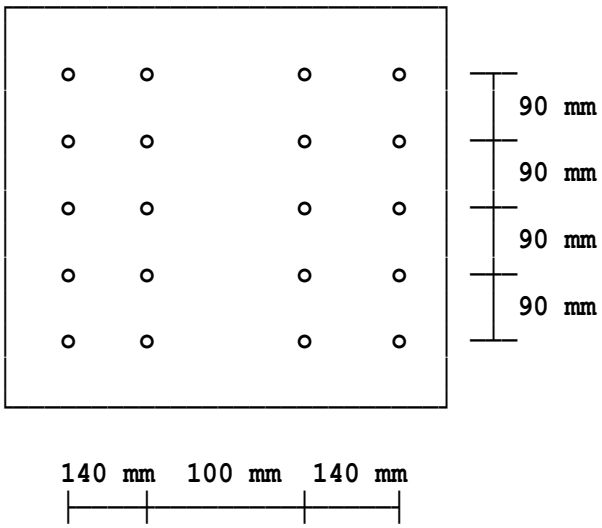

Bolt diameter	**24 mm**
Number	**20**
Bolt grade	**HSFG**
	Higher grade to BS4395-2
Nut grade	**12**

Location: Ex1 - From 'Structural Steelwork' by MacGinley

Bolted connection

Calculations are in accordance with EC3 Part 1-1. Fasteners are subject to both shear and torsion. Fasteners are in the plane of the load.

Axial force	Fv=0 kN
Eccentric force	F=212 kN
Eccentricity of force	ecc=525 mm
Bolt diameter	db=24 mm
Bolt pitch (vertically)	p1=70 mm
Distance between bolt centres	p3=140 mm
Plate thickness	tp=15 mm

BOLT SUMMARY - all dimensions in diagram are in mm

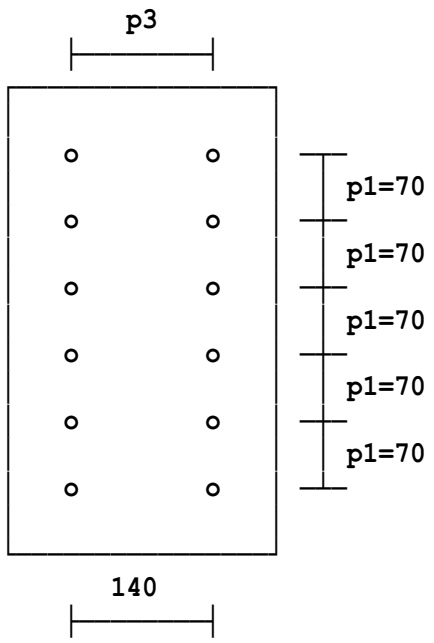

Bolt diameter	**24 mm**
Number of bolts	**12**
Bolt grade	**8.8**

Location: Ex2 - Grade 8.8 bolts shear and torsion

Bolted connection

Calculations are in accordance with EC3 Part 1-1. Fasteners are subject to both shear and torsion. Fasteners are in the plane of the load.

Applied shear force	Fv=150 kN
Applied torsional moment	M=180 kNm
Bolt diameter	db=20 mm
Bolt pitch (vertically)	p1=70 mm
Distance between bolt centres	S1=120 mm
Distance between bolt centres	S2=90 mm
Plate thickness	tp=15 mm

BOLT SUMMARY - all dimensions in diagram are in mm

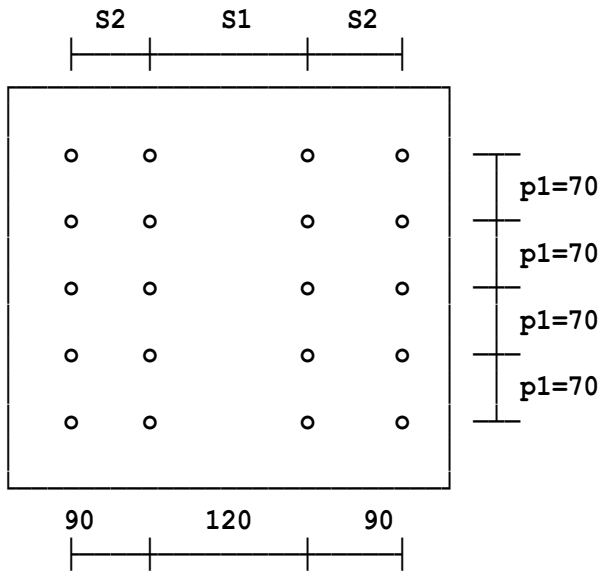

Bolt diameter	**20 mm**
Number of bolts	**20**
Bolt grade	**8.8**

Location: Ex3 - Grade 8.8 bolts shear and tension

Bolted connection

Calculations in accordance with BS5950-1:2000. Fasteners are subject to both shear and tension. Fasteners are not in the plane of the load.

Applied shear force	Fv=147 kN
Applied moment	M=257 kNm
Bolt diameter	db=24 mm
Bolt pitch (vertically)	p1=90 mm
Distance between bolt centres	p3=140 mm
Plate thickness	tp=15 mm
below the bottom bolts	a=60 mm

BOLT SUMMARY - all dimensions in diagram are in mm

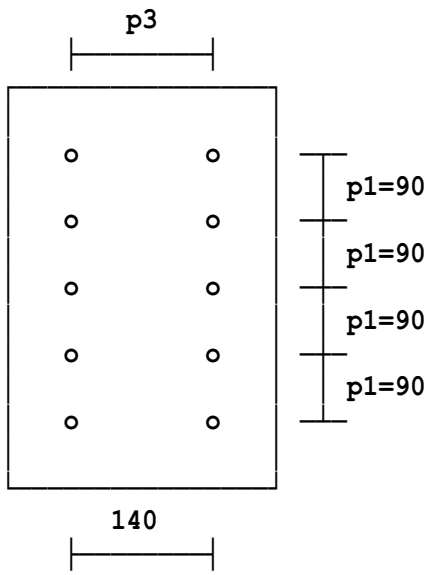

Bolt diameter	**24 mm**
Number of bolts	**10**
Bolt grade	**8.8**

Location: Ex4 - Grade 8.8 bolts shear and tension

Bolted connection

Calculations in accordance with BS5950-1:2000. Fasteners are subject to both shear and tension. Fasteners are not in the plane of the load.

Applied shear force	Fv=247 kN
Applied moment	M=657 kNm
Bolt diameter	db=24 mm
Bolt pitch (vertically)	p1=90 mm
Distance between bolt centres	S1=100 mm
Distance between bolt centres	S2=140 mm
Plate thickness	tp=15 mm
below the bottom bolts	a=60 mm

BOLT SUMMARY - all dimensions in diagram are in mm

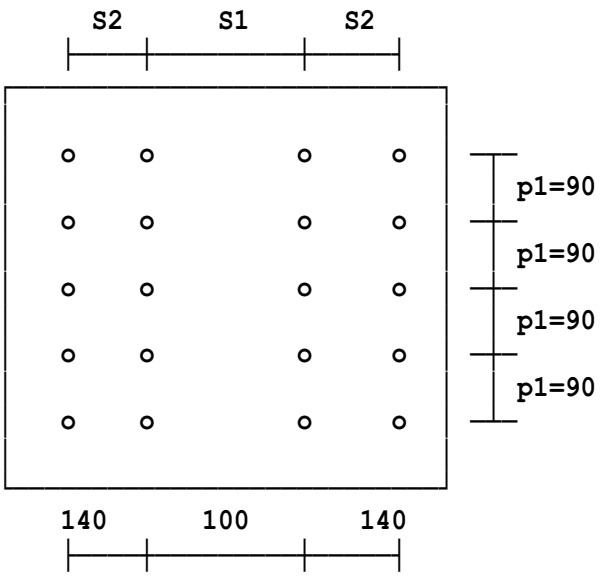

Bolt diameter	**24 mm**
Number of bolts	**20**
Bolt grade	**8.8**

Location: Unrestrained notched beam to EC3 - top notch

Partial depth end plate

Analysis of the connection follows the treatment in the BCSA/SCI publication 'Joints in Steel Construction: Simple Joints to EC3 and BS EN 1993-1: 2005.
Universal section to universal section bolted connection.
Factored end reaction VEd=200 kN

Supporting member details

457 x 191 x 82 UKB
Thickness of connecting ply ts=9.9 mm

Supported beam details

356 x 127 x 33 UKB

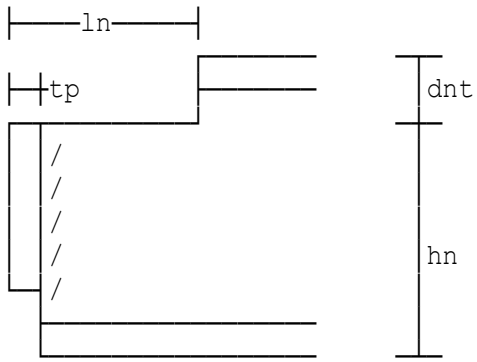

tp= end plate thickness
hp= end plate length

Length of notch to end face ln=110 mm
Depth of notch dnt=50 mm
Thickness of end plate tp=10 mm
Length of end plate hp=290 mm
Reduced depth of sectn.at notch hn=h-dnt=299 mm

Design moment about y-y axis MyEd=40 kNm
Length of supported beam L=5000 mm
Coefficient C1 C1=1.13

DESIGN SUMMARY	**Depth of section**	**349 mm**
	Length of notch	**110 mm**
	Depth of notch	**50 mm**
	Yield strength of steel	**275 N/mm²**
	Factored end reaction	**200 kN**
	Shear resistance	**248.64 kN**
	Classification	**Class 1**
	Design moment (y-y axis)	**40 kNm**
	Design buckling resistance	**42.113 kNm**
	Unity factor	**0.94984**

Location: Restrained notched beam to EC3 - top notch

Partial depth end plate

Analysis of the connection follows the treatment in the BCSA/SCI publication 'Joints in Steel Construction: Simple Joints to EC3 and BS EN 1993-1: 2005.
Universal section to universal section bolted connection.
Factored end reaction VEd=200 kN

Supporting member details

457 x 191 x 82 UKB
Thickness of connecting ply ts=9.9 mm

Supported beam details

356 x 127 x 33 UKB

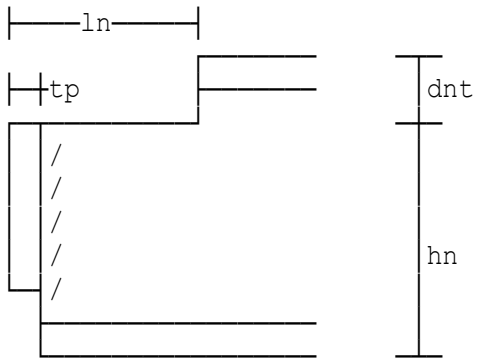

tp= end plate thickness
hp= end plate length

Length of notch to end face ln=110 mm
Depth of notch dnt=50 mm
Thickness of end plate tp=10 mm
Length of end plate hp=290 mm
Reduced depth of sectn.at notch hn=h-dnt=299 mm

DESIGN	**Depth of section**	**349 mm**
SUMMARY	**Length of notch**	**110 mm**
	Depth of notch	**50 mm**
	Yield strength of steel	**275 N/mm²**
	Factored end reaction	**200 kN**
	Shear resistance	**248.64 kN**

Location: Unrestrained beam to EC3 - notches top and bottom

Partial depth end plate

Analysis of the connection follows the treatment in the BCSA/SCI publication 'Joints in Steel Construction: Simple Joints to EC3 and BS EN 1993-1: 2005.
Universal section to universal section bolted connection.
Factored end reaction VEd=160 kN

Supporting member details

457 x 191 x 82 UKB
Thickness of connecting ply ts=9.9 mm

Supported beam details

356 x 127 x 39 UKB

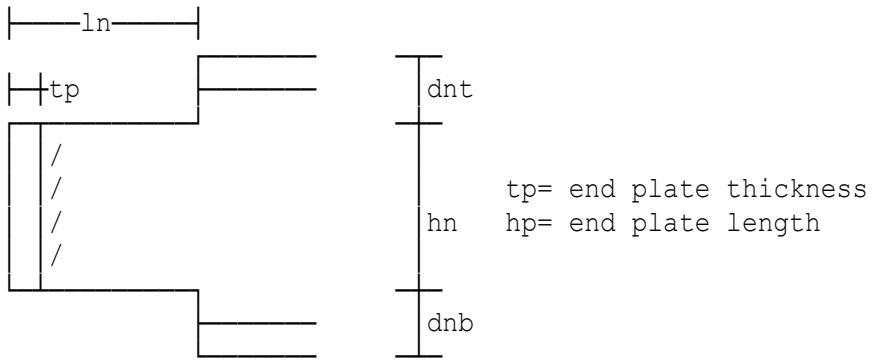

Length of notch to end face	ln=110 mm
Depth of notch	dnt=50 mm
Depth of lower notch	dnb=50 mm
Thickness of end plate	tp=10 mm
Reduced depth of sectn.at notch	hn=h-dnt-dnb=253.4 mm
Length of end plate	hp=253.4 mm
Design moment about y-y axis	MyEd=40 kNm
Length of supported beam	L=5000 mm
Coefficient C1	C1=1.13

DESIGN SUMMARY	**Depth of section**	**353.4 mm**
	Length of notch	**110 mm**
	Depth of notch	**50 mm**
	Yield strength of steel	**275 N/mm²**
	Factored end reaction	**160 kN**
	Shear resistance	**238.98 kN**
	Classification	**Class 1**
	Design moment (y-y axis)	**40 kNm**
	Design buckling resistance	**48.918 kNm**
	Unity factor	**0.81769**

Location: Cavity wall spanning horizontally adjacent to an opening

Cavity wall spanning horizontally

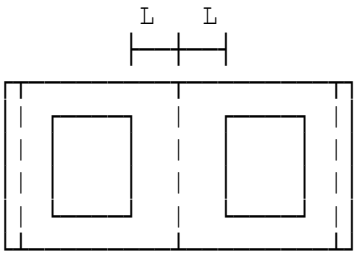

Wall elevation

Wall design to BS5628-1:2005

Wall section between windows will be considered as a cantilever spanning horizontally. The window is assumed to be spanning horizontally transferring wind loading to the end of the cantilever. Between the windows is assumed to be a wall, a column or a wind post secured to floors. The wall sections above and below the windows are beyond the scope of this program.

Length of cantilever	L=0.5 m
Thickness of outer skin	t1=100 mm
Thickness of inner skin	t2=140 mm
Mortar designation to be used	mort=3
Blockwork compressive strength	bcs1=7.3 N/mm²
Outer skin flexural strength	fkx1=TABLE 3.8 for bcs1=7.3, mort=3 =0.6 N/mm²
Inner skin is blockwork:	
Blockwork compressive strength	bcs2=7.3 N/mm²
Inner skin flexural strength	fkx2=0.53333 N/mm²
Width of window	width=1.5 m
Wind loading on wall	w2=0.4 kN/m²
Outer skin flexural strength	fkx1=0.6 N/mm²
Inner skin flexural strength	fkx2=0.53333 N/mm²
Partial safety factor of material	gammam=3
Wall design moment of resistance	Mr=mr1+mr2=0.91407 kNm

Cavity wall spanning horizontally

The wall moment of resistance is greater than moment on the wall and therefore the wall is satisfactory for the proposed lateral load of 0.4 kN/m²

Adopt an outer skin of blockwork	100 mm
Adopt an inner skin of blockwork	140 mm
Mortar designation to be used	3
Moment of resistance	0.91407 kNm
Ultimate Moment on wall	0.24 kNm
Factor of safety for wind load	1.2

Location: Cavity wall spanning horizontally adjacent to an opening

Cavity wall spanning horizontally

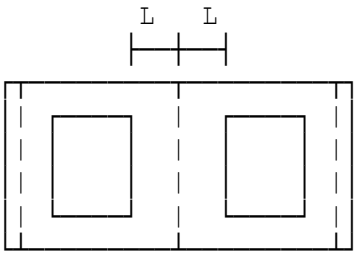

Wall elevation

Wall design to BS5628-1:2005

Wall section between windows will be considered as a cantilever spanning horizontally. The window is assumed to be spanning horizontally transferring wind loading to the end of the cantilever. Between the windows is assumed to be a wall, a column or a wind post secured to floors. The wall sections above and below the windows are beyond the scope of this program.

Length of cantilever	L=0.75 m
Thickness of outer skin	t1=100 mm
Thickness of inner skin	t2=140 mm
Mortar designation to be used	mort=3
Water absorption of bricks	wa=13
Outer skin flexural strength	fkx1=TABLE 3.2 for wa=13, mort=3 =0.9 N/mm²
Inner skin is blockwork:	
Blockwork compressive strength	bcs2=7.3 N/mm²
Inner skin flexural strength	fkx2=0.53333 N/mm²
Width of window	width=1.5 m
Wind loading on wall	w2=0.4 kN/m²
Outer skin flexural strength	fkx1=0.9 N/mm²
Inner skin flexural strength	fkx2=0.53333 N/mm²
Partial safety factor of material	gammam=3
Wall design moment of resistance	Mr=mr1+mr2=1.0807 kNm

Cavity wall spanning horizontally

The wall moment of resistance is greater than moment on the wall and therefore the wall is satisfactory for the proposed lateral load of 0.4 kN/m²

Adopt an outer skin of brickwork	100 mm
Water absorption of bricks	13 %
Adopt an inner skin of blockwork	140 mm
Mortar designation to be used	3
Moment of resistance	1.0807 kNm
Ultimate Moment on wall	0.405 kNm
Factor of safety for wind load	1.2

Location: Cavity wall spanning horizontally adjacent to an opening

Cavity wall spanning horizontally

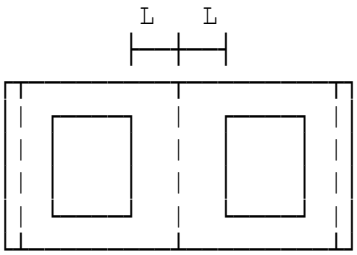

Wall elevation

Wall design to EC6 Part 1-1

Wall section between windows will be considered as a cantilever spanning horizontally. The window is assumed to be spanning horizontally transferring wind loading to the cantilever. Between the windows is assumed to be a wall, a column or a wind post secured to floors. The wall sections above and below the windows are beyond the scope of this program.

Length of cantilever	L=0.5 m
Thickness of outer skin	t1=100 mm
Thickness of inner skin	t2=140 mm
Mortar designation to be used	mort=3
The outer skin is blockwork:	
Compressive strength of units	fb1=7.3 N/mm²
Outer skin flexural strength	fxk2=TABLE 6.8 for fb1=7.3, mort=3 =0.6 N/mm²
Inner skin is blockwork:	
Compressive strength of units	fb2=7.3 N/mm²
Inner skin flexural strength	fxk2'=0.53333 N/mm²
Width of window	width=1.5 m
Wind loading on wall	Qkw=0.4 kN/m²
Partial safety factor (material)	gamM=2.4
Wall design moment of resistance	Mrd=mr1+mr2=1.1426 kNm

SUMMARY OF RESULTS

The wall moment of resistance is greater than moment on the wall and therefore the wall is satisfactory for the proposed lateral load of 0.4 kN/m²

Adopt an outer skin of blockwork	100 mm
Adopt an inner skin of blockwork	140 mm
Mortar designation to be used	3
Design moment of resistance	1.1426 kNm
Design moment on wall	0.3 kNm
Factor of safety for wind load	1.5

Location: Cavity wall spanning horizontally adjacent to an opening

Cavity wall spanning horizontally

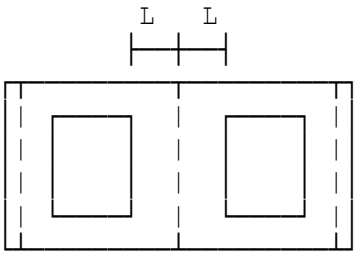

Wall elevation

Wall design to EC6 Part 1-1

Wall section between windows will be considered as a cantilever spanning horizontally. The window is assumed to be spanning horizontally transferring wind loading to the cantilever. Between the windows is assumed to be a wall, a column or a wind post secured to floors. The wall sections above and below the windows are beyond the scope of this program.

Length of cantilever	L=0.75 m
Thickness of outer skin	t1=100 mm
Thickness of inner skin	t2=140 mm
Mortar designation to be used	mort=3
Outer skin is brickwork:	
Water absorption of bricks	wa=13 %
Outer skin flexural strength	fxk2=TABLE 6.2 for wa=13, mort=3 =0.9 N/mm²
Inner skin is blockwork:	
Compressive strength of units	fb2=7.3 N/mm²
Inner skin flexural strength	fxk2'=0.53333 N/mm²
Width of window	width=1.5 m
Wind loading on wall	Qkw=0.4 kN/m²
Partial safety factor (material)	gamM=2.4
Wall design moment of resistance	Mrd=mr1+mr2=1.3509 kNm

SUMMARY OF RESULTS

The wall moment of resistance is greater than moment on the wall and therefore the wall is satisfactory for the proposed lateral load of 0.4 kN/m²

Adopt an outer skin of brickwork	100 mm
Water absorption of bricks	13 %
Adopt an inner skin of blockwork	140 mm
Mortar designation to be used	3
Design moment of resistance	1.3509 kNm
Design moment on wall	0.50625 kNm
Factor of safety for wind load	1.5

Location: Wall on grid line A/1-2

Length of wall panel	L=4 m
Height of wall panel	h=3 m
Outer leaf density	den(1)=10 kN/m³
Thickness of outer leaf	t(1)=100 mm
Inner leaf density	den(2)=10 kN/m³
Thickness of inner leaf	t(2)=100 mm
Mortar designation (Table 1)	mortar=3
Outer leaf (1=clay 2=calc silicate 3=conc brick 4=block)	typ(1)=4
compressive strength	po(1)=10.4 N/mm²
Inner leaf (1=clay 2=calc silicate 3=conc brick 4=block)	typ(2)=4
compressive strength	po(2)=10.4 N/mm²
Partial safety factor materials	gammam=3

Characteristic wind load per unit area	WL=0.85 kN/m²
Additional vert DL on panel	w(1)=0 kN/m
Additional vert DL on panel	w(2)=0 kN/m

DESIGN SUMMARY	**Panel length**	**4 m**
	Panel height	**3 m**
	OUTER LEAF	
	Thickness	**100 mm**
	Char flex strength (bed)	**0.25 N/mm²**
	Char flex strength (perp)	**0.75 N/mm²**
	INNER LEAF	
	Thickness	**100 mm**
	Char flex strength (bed)	**0.25 N/mm²**
	Char flex strength (perp)	**0.75 N/mm²**
	Effective wall thickness	**133.33 mm**
	Char wind pressure	**0.85 kN/m²**
	Char wind capacity (bend)	**0.98078 kN/m²**
	Design shear on sides	**6.12 kN**
	Shear strength of sides	**84 kN**
	Design shear on founds	**12.24 kN**
	Shear strength of founds	**53.184 kN**
	Material safety factor	**3**
	Load safety factor	**1.2**

Copyright 1986-2024 Fitzroy Systems Ltd.

Location: Wall on grid line A/1-2

Length of wall panel L=2 m
Height of wall panel h=1.5 m
Outer leaf density den(1)=10 kN/m³
Thickness of outer leaf t(1)=150 mm
Mortar designation (Table 1) mortar=1
Outer leaf (1=clay 2=calc silicate 3=conc brick 4=block) typ(1)=1
Water absorption %age of leaf water1=7
Partial safety factor materials gammam=3

Characteristic wind load per unit area WL=0.85 kN/m²
Additional vert DL on panel w(1)=10 kN/m

DESIGN SUMMARY	**Panel length**	**2 m**
	Panel height	**1.5 m**
	Thickness	**150 mm**
	Char flex strength (bed)	**0.5 N/mm²**
	Char flex strength (perp)	**1.5 N/mm²**
	Char wind pressure	**0.85 kN/m²**
	Char wind capacity (bend)	**7.0176 kN/m²**
	Design shear on sides	**1.53 kN**
	Shear strength of sides	**63 kN**
	Design shear on founds	**3.06 kN**
	Shear strength of founds	**47.292 kN**
	Material safety factor	**3**
	Load safety factor	**1.2**

Location: Wall on grid line A/1-2

Length of wall panel	L=10 m
Height of wall panel	h=3 m
Outer leaf density	den(1)=3 kN/m³
Thickness of outer leaf	t(1)=100 mm
Inner leaf density	den(2)=20 kN/m³
Thickness of inner leaf	t(2)=450 mm
Mortar designation (Table 1)	mortar=2
Outer leaf (1=clay 2=calc silicate 3=conc brick 4=block)	typ(1)=2
Inner leaf (1=clay 2=calc silicate 3=conc brick 4=block)	typ(2)=4
compressive strength	po(2)=60 N/mm²
Partial safety factor materials	gammam=3

Characteristic wind load per unit area	WL=0.85 kN/m²
Additional vert DL on panel	w(1)=0 kN/m
Additional vert DL on panel	w(2)=0 kN/m

DESIGN SUMMARY		
	Panel length	**10 m**
	Panel height	**3 m**
	OUTER LEAF	
	Thickness	**100 mm**
	Char flex strength (bed)	**0.3 N/mm²**
	Char flex strength (perp)	**0.9 N/mm²**
	INNER LEAF	
	Thickness	**450 mm**
	Char flex strength (bed)	**0.25 N/mm²**
	Char flex strength (perp)	**0.9 N/mm²**
	Effective wall thickness	**450 mm**
	Char wind pressure	**0.85 kN/m²**
	Char wind capacity (bend)	**4.2393 kN/m²**
	Design shear on sides	**17.85 kN**
	Shear strength of sides	**231 kN**
	Design shear on founds	**17.85 kN**
	Shear strength of founds	**830.26 kN**
	Material safety factor	**3**
	Load safety factor	**1.4**

Location: Wall on grid line A/1-2

Length of wall panel	L=1 m
Height of wall panel	h=0.9 m
Outer leaf density	den(1)=10 kN/m³
Thickness of outer leaf	t(1)=150 mm
Inner leaf density	den(2)=10 kN/m³
Thickness of inner leaf	t(2)=350 mm
Mortar designation (Table 1)	mortar=3
Outer leaf (1=clay 2=calc silicate 3=conc brick 4=block)	typ(1)=3
Inner leaf (1=clay 2=calc silicate 3=conc brick 4=block)	typ(2)=4
compressive strength	po(2)=10.4 N/mm²
Partial safety factor materials	gammam=3

Characteristic wind load per unit area	WL=0.85 kN/m²
Additional vert DL on panel	w(1)=0 kN/m
Additional vert DL on panel	w(2)=0 kN/m

DESIGN SUMMARY

Panel length	**1 m**
Panel height	**0.9 m**
OUTER LEAF	
Thickness	**150 mm**
Char flex strength (bed)	**0.3 N/mm²**
Char flex strength (perp)	**0.9 N/mm²**
INNER LEAF	
Thickness	**350 mm**
Char flex strength (bed)	**0.25 N/mm²**
Char flex strength (perp)	**0.75 N/mm²**
Effective wall thickness	**350 mm**
Char wind pressure	**0.85 kN/m²**
Char wind capacity (bend)	**175.15 kN/m²**
Design shear on sides	**0.459 kN**
Shear strength of sides	**52.2 kN**
Design shear on founds	**0.459 kN**
Shear strength of founds	**30.972 kN**
Material safety factor	**3**
Load safety factor	**1.2**

Copyright 1986-2024 Fitzroy Systems Ltd.

Location: Wall on grid line A/1-2

Length of wall panel L=3 m
Height of wall panel h=3 m
Outer leaf density den(1)=10 kN/m³
Thickness of outer leaf t(1)=150 mm
Mortar designation (Table 1) mortar=4
Outer leaf (1=clay 2=calc silicate 3=conc brick 4=block) typ(1)=4
compressive strength po(1)=10.4 N/mm²
Partial safety factor materials gammam=3

Characteristic wind load per unit area WL=0.6 kN/m²
Additional vert DL on panel w(1)=0 kN/m

DESIGN SUMMARY	**Panel length**	**3 m**
	Panel height	**3 m**
	Thickness	**150 mm**
	Char flex strength (bed)	**0.2 N/mm²**
	Char flex strength (perp)	**0.6 N/mm²**
	Char wind pressure	**0.6 kN/m²**
	Char wind capacity (bend)	**0.61428 kN/m²**
	Design shear on sides	**7.56 kN**
	Shear strength of sides	**63 kN**
	Design shear on founds	**3.78 kN**
	Shear strength of founds	**29.916 kN**
	Material safety factor	**3**
	Load safety factor	**1.4**

Location: Wall on grid line A/1-2

Length of wall panel	L=4 m
Height of wall panel	h=3 m
Outer leaf density	den(1)=10 kN/m³
Thickness of outer leaf	t(1)=100 mm
Inner leaf density	den(2)=10 kN/m³
Thickness of inner leaf	t(2)=100 mm
Mortar designation (Table NA.2)	mortar=3
Outer leaf (1=clay 2=calc silicate 3=conc brick 4=block)	typ(1)=4
Compressive strength of units	po(1)=10.4 N/mm²
Inner leaf (1=clay 2=calc silicate 3=conc brick 4=block)	typ(2)=4
Compressive strength of units	po(2)=10.4 N/mm²
Partial safety factor (material)	gamM=2.4
Characteristic wind load per unit area	Qkw=0.85 kN/m²
Additional vert DL on panel	w(1)=0 kN/m
Height of outer leaf units	hu(1)=215 mm
Additional vert DL on panel	w(2)=0 kN/m
Height of inner leaf units	hu(2)=215 mm

DESIGN SUMMARY	**Panel length**	**4 m**
	Panel height	**3 m**
	OUTER LEAF	
	Thickness	**100 mm**
	Char flex strength (bed)	**0.25 N/mm²**
	Char flex strength (perp)	**0.75 N/mm²**
	INNER LEAF	
	Thickness	**100 mm**
	Char flex strength (bed)	**0.25 N/mm²**
	Char flex strength (perp)	**0.75 N/mm²**
	Effective wall thickness	**125.93 mm**
	Char wind pressure	**0.85 kN/m²**
	Char wind capacity (bend)	**0.97602 kN/m²**
	Design shear on sides	**7.65 kN**
	Shear strength of sides	**36 kN**
	Design shear on founds	**15.3 kN**
	Shear strength of founds	**51.456 kN**
	Material safety factor	**2.4**
	Load safety factor	**1.5**

Location: Wall on grid line A/1-2

Length of wall panel	L=2 m
Height of wall panel	h=1.5 m
Outer leaf density	den(1)=10 kN/m³
Thickness of outer leaf	t(1)=150 mm
Mortar designation (Table NA.2)	mortar=1
Outer leaf (1=clay 2=calc silicate 3=conc brick 4=block)	typ(1)=1
Water absorption %age of leaf	water1=7
Compressive strength of units	po(1)=10.4 N/mm²
Partial safety factor (material)	gamM=2.4
Characteristic wind load per unit area	Qkw=0.85 kN/m²
Additional vert DL on panel	w(1)=10 kN/m
Height of the units	hu(1)=215 mm

DESIGN SUMMARY	**Panel length**	**2 m**
	Panel height	**1.5 m**
	Thickness	**150 mm**
	Char flex strength (bed)	**0.5 N/mm²**
	Char flex strength (perp)	**1.5 N/mm²**
	Char wind pressure	**0.85 kN/m²**
	Char wind capacity (bend)	**6.951 kN/m²**
	Design shear on sides	**1.9125 kN**
	Shear strength of sides	**27 kN**
	Design shear on founds	**3.825 kN**
	Shear strength of founds	**39.528 kN**
	Material safety factor	**2.4**
	Load safety factor	**1.5**

Location: Wall on grid line A/1-2

Length of wall panel	L=10 m
Height of wall panel	h=3 m
Outer leaf density	den(1)=3 kN/m³
Thickness of outer leaf	t(1)=100 mm
Inner leaf density	den(2)=20 kN/m³
Thickness of inner leaf	t(2)=450 mm
Mortar designation (Table NA.2)	mortar=2
Outer leaf (1=clay 2=calc silicate 3=conc brick 4=block)	typ(1)=2
Compressive strength of units	po(1)=20 N/mm²
Inner leaf (1=clay 2=calc silicate 3=conc brick 4=block)	typ(2)=4
Compressive strength of units	po(2)=60 N/mm²
Partial safety factor (material)	gamM=2.7
Characteristic wind load per unit area	Qkw=0.85 kN/m²
Additional vert DL on panel	w(1)=0 kN/m
Height of outer leaf units	hu(1)=215 mm
Additional vert DL on panel	w(2)=0 kN/m
Height of inner leaf units	hu(2)=215 mm

DESIGN SUMMARY	**Panel length**	**10 m**
	Panel height	**3 m**
	OUTER LEAF	
	Thickness	**100 mm**
	Char flex strength (bed)	**0.3 N/mm²**
	Char flex strength (perp)	**0.9 N/mm²**
	INNER LEAF	
	Thickness	**450 mm**
	Char flex strength (bed)	**0.25 N/mm²**
	Char flex strength (perp)	**0.9 N/mm²**
	Effective wall thickness	**451.36 mm**
	Char wind pressure	**0.85 kN/m²**
	Char wind capacity (bend)	**4.3956 kN/m²**
	Design shear on sides	**19.125 kN**
	Shear strength of sides	**99 kN**
	Design shear on founds	**19.125 kN**
	Shear strength of founds	**370.18 kN**
	Material safety factor	**2.7**
	Load safety factor	**1.5**

Location: Wall on grid line A/1-2

Length of wall panel	L=1 m
Height of wall panel	h=0.9 m
Outer leaf density	den(1)=10 kN/m³
Thickness of outer leaf	t(1)=150 mm
Inner leaf density	den(2)=10 kN/m³
Thickness of inner leaf	t(2)=350 mm
Mortar designation (Table NA.2)	mortar=3
Outer leaf (1=clay 2=calc silicate 3=conc brick 4=block)	typ(1)=3
Compressive strength of units	po(1)=10.4 N/mm²
Inner leaf (1=clay 2=calc silicate 3=conc brick 4=block)	typ(2)=4
Compressive strength of units	po(2)=10.4 N/mm²
Partial safety factor (material)	gamM=2.4
Characteristic wind load per unit area	Qkw=0.85 kN/m²
Additional vert DL on panel	w(1)=0 kN/m
Height of outer leaf units	hu(1)=215 mm
Additional vert DL on panel	w(2)=0 kN/m
Height of inner leaf units	hu(2)=215 mm

DESIGN SUMMARY	**Panel length**	**1 m**
	Panel height	**0.9 m**
	OUTER LEAF	
	Thickness	**150 mm**
	Char flex strength (bed)	**0.3 N/mm²**
	Char flex strength (perp)	**0.9 N/mm²**
	INNER LEAF	
	Thickness	**350 mm**
	Char flex strength (bed)	**0.25 N/mm²**
	Char flex strength (perp)	**0.75 N/mm²**
	Effective wall thickness	**358.74 mm**
	Char wind pressure	**0.85 kN/m²**
	Char wind capacity (bend)	**174.41 kN/m²**
	Design shear on sides	**0.57375 kN**
	Shear strength of sides	**27 kN**
	Design shear on founds	**0.57375 kN**
	Shear strength of founds	**30.648 kN**
	Material safety factor	**2.4**
	Load safety factor	**1.5**

Location: Wall on grid line A/1-2

Length of wall panel	L=3 m
Height of wall panel	h=3 m
Outer leaf density	den(1)=10 kN/m³
Thickness of outer leaf	t(1)=150 mm
Mortar designation (Table NA.2)	mortar=4
Outer leaf (1=clay 2=calc silicate 3=conc brick 4=block)	typ(1)=4
Compressive strength of units	po(1)=10.4 N/mm²
Partial safety factor (material)	gamM=2.7
Characteristic wind load per unit area	Qkw=0.6 kN/m²
Additional vert DL on panel	w(1)=0 kN/m
Height of the units	hu(1)=215 mm

DESIGN SUMMARY	**Panel length**	**3 m**
	Panel height	**3 m**
	Thickness	**150 mm**
	Char flex strength (bed)	**0.2 N/mm²**
	Char flex strength (perp)	**0.6 N/mm²**
	Char wind pressure	**0.6 kN/m²**
	Char wind capacity (bend)	**0.63099 kN/m²**
	Design shear on sides	**8.1 kN**
	Shear strength of sides	**18 kN**
	Design shear on founds	**4.05 kN**
	Shear strength of founds	**19.944 kN**
	Material safety factor	**2.7**
	Load safety factor	**1.5**

Location: Wall on grid line A/1-2

UDL on panel (including opening)	w=0.85 kN/m²
Overall panel length horizontally	L=4.2 m
Overall panel height	H=2.8 m
Vertical dimension of opening	c=1.3 m
Horizontal dimension of opening	d=1.1 m

DESIGN SUMMARY	**Sub-panel A:**	**length**	**1.1 m**
		height	**1.5 m**
		udl	**0.85 kN/m²**
	Sub-panel B:	**length**	**3.1 m**
		height	**2.8 m**
		udl	**1.6848 kN/m²**

Location: Wall on grid line A/1-2

UDL on panel (including opening)	w=0.85 kN/m²
Overall panel length horizontally	L=10.2 m
Overall panel height	H=7.8 m
Vertical dimension of opening	c=0.2 m
Horizontal dimension of opening	d=0.2 m
Distance to underside of opening	e=3.5 m

DESIGN SUMMARY	**Sub-panel A:**	**length**	**10.2 m**
		height	**4.1 m**
		udl	**0.89167 kN/m²**
	Sub-panel B:	**length**	**10 m**
		height	**0.2 m**
		udl	**0.85 kN/m²**
	Sub-panel C:	**length**	**10.2 m**
		height	**3.5 m**
		udl	**0.89857 kN/m²**

Location: Wall on grid line A/1-2

UDL on panel (including opening)	w=4.85 kN/m²
Overall panel length horizontally	L=1.2 m
Overall panel height	H=0.8 m
Vertical dimension of opening	c=0.2 m
Horizontal dimension of opening	d=0.3 m

DESIGN SUMMARY	**Sub-panel A:**	**length**	**1.2 m**
		height	**0.6 m**
		udl	**6.8708 kN/m²**
	Sub-panel B:	**length**	**0.9 m**
		height	**0.2 m**
		udl	**4.85 kN/m²**

Location: Wall on grid line A/1-2

UDL on panel (including opening)	w=0.85 kN/m²
Overall panel length horizontally	L=4.2 m
Overall panel height	H=1.8 m
Vertical dimension of opening	c=0.8 m
Horizontal dimension of opening	d=0.8 m
Distance to side of opening	e=1.7 m

DESIGN SUMMARY	**Sub-panel A:**	**length**	**1.7 m**
		height	**1.8 m**
		udl	**1.7944 kN/m²**
	Sub-panel B:	**length**	**0.8 m**
		height	**1 m**
		udl	**0.85 kN/m²**
	Sub-panel C:	**length**	**1.7 m**
		height	**1.8 m**
		udl	**1.7944 kN/m²**

Location: Wall on grid line A/1-2

UDL on panel (including opening)	w=0.85 kN/m²
Overall panel length horizontally	L=4.2 m
Overall panel height	H=3.8 m
Vertical dimension of opening	c=0.8 m
Horizontal dimension of opening	d=4.2 m

DESIGN SUMMARY	**Sub-panel A:**	**length**	**4.2 m**
		height	**3 m**
		udl	**1.2548 kN/m²**

Location: Wall on grid line A/1-2

UDL on panel (including opening)	w=0.85 kN/m²
Overall panel length horizontally	L=4.2 m
Overall panel height	H=2.8 m
Vertical dimension of opening	c=1.3 m
Horizontal dimension of opening	d=1.1 m

DESIGN SUMMARY	**Sub-panel A:**	**length**	**1.1 m**
		height	**1.5 m**
		udl	**0.85 kN/m²**
	Sub-panel B:	**length**	**3.1 m**
		height	**2.8 m**
		udl	**1.6848 kN/m²**

Location: Wall on grid line A/1-2

UDL on panel (including opening)	w=0.85 kN/m²
Overall panel length horizontally	L=10.2 m
Overall panel height	H=7.8 m
Vertical dimension of opening	c=0.2 m
Horizontal dimension of opening	d=0.2 m
Distance to underside of opening	e=3.5 m

DESIGN SUMMARY	**Sub-panel A:**	**length**	**10.2 m**
		height	**4.1 m**
		udl	**0.89167 kN/m²**
	Sub-panel B:	**length**	**10 m**
		height	**0.2 m**
		udl	**0.85 kN/m²**
	Sub-panel C:	**length**	**10.2 m**
		height	**3.5 m**
		udl	**0.89857 kN/m²**

Location: Wall on grid line A/1-2

UDL on panel (including opening)	w=4.85 kN/m²
Overall panel length horizontally	L=1.2 m
Overall panel height	H=0.8 m
Vertical dimension of opening	c=0.2 m
Horizontal dimension of opening	d=0.3 m

DESIGN SUMMARY	**Sub-panel A:**	**length**	**1.2 m**
		height	**0.6 m**
		udl	**6.8708 kN/m²**
	Sub-panel B:	**length**	**0.9 m**
		height	**0.2 m**
		udl	**4.85 kN/m²**

Location: Wall on grid line A/1-2

UDL on panel (including opening)	w=0.85 kN/m²
Overall panel length horizontally	L=4.2 m
Overall panel height	H=1.8 m
Vertical dimension of opening	c=0.8 m
Horizontal dimension of opening	d=0.8 m
Distance to side of opening	e=1.7 m

DESIGN SUMMARY	**Sub-panel A:**	**length**	**1.7 m**
		height	**1.8 m**
		udl	**1.7944 kN/m²**
	Sub-panel B:	**length**	**0.8 m**
		height	**1 m**
		udl	**0.85 kN/m²**
	Sub-panel C:	**length**	**1.7 m**
		height	**1.8 m**
		udl	**1.7944 kN/m²**

Location: Wall on grid line A/1-2

UDL on panel (including opening)	w=0.85 kN/m²
Overall panel length horizontally	L=4.2 m
Overall panel height	H=3.8 m
Vertical dimension of opening	c=0.8 m
Horizontal dimension of opening	d=4.2 m

DESIGN SUMMARY	**Sub-panel A:**	**length**	**4.2 m**
		height	**3 m**
		udl	**1.2548 kN/m²**

Copyright 1986-2024 Fitzroy Systems Ltd.

Location: Wall on grid line A/1-2

Clear height of wall	h=2.2
Length of panel	L=4 m
Thickness of wall	t=140 mm
Support restraint factor	rf=1
Mortar designation to Table 1	mortar=3
Masonry type (1=clay 2=cal silicate 3=conc brick 4=block)	typ(1)=1
Compressive Strength of Units	po=20 N/mm²
Water absorption %age of leaf	water=7
Material partial safety factor	gammam=2.5
Density	dens=10 kN/m³
Eccentricity of roof load	ecc=23.333 mm
Dead load excluding self weight	DL=1.2 kN/m
Imposed load	LL=1.6 kN/m
Wind load	WL=0.25 kN/m²
Moment reduction factor	mrf=1

DESIGN SUMMARY	**Wall height**	**2.2 m**
	Wall length	**4 m**
	Wall thickness	**140 mm**
	Char. compressive strength	**5 N/mm²**
	Char. flexural strength	**0.4 N/mm²**
	Design vertical load	**6.396 kN/m**
	Vertical load resistance	**192.67 kN/m**
	Design bending moment	**0.21175 kNm/m**
	Bending moment resistance	**0.58021 kNm/m**
	Partial safety factors:	
	Material	**2.5**
	Dead load (max)	**1.4**
	Dead load (min)	**0.9**
	Imposed load	**1.6**
	Wind load	**1.4**

Location: Wall on grid line A/1-2

Clear height of wall	h=2.2
Length of panel	L=4 m
Thickness of wall	t=150 mm
Support restraint factor	rf=0.9
Mortar designation to Table 1	mortar=3
Masonry type (1=clay 2=cal silicate 3=conc brick 4=block)	typ(1)=4
Compressive Strength of Units	po=22.5 N/mm²
Material partial safety factor	gammam=2.5
Density	dens=10 kN/m³
Eccentricity of roof load	ecc=20 mm
Dead load excluding self weight	DL=1.2 kN/m
Imposed load	LL=1.6 kN/m
Wind load	WL=0.25 kN/m²
Moment reduction factor	mrf=1.2

DESIGN SUMMARY	**Wall height**	**2.2 m**
	Wall length	**4 m**
	Wall thickness	**150 mm**
	Char. compressive strength	**9.5714 N/mm²**
	Char. flexural strength	**0.25 N/mm²**
	Design vertical load	**6.55 kN/m**
	Vertical load resistance	**450.24 kN/m**
	Design bending moment	**0.17646 kNm/m**
	Bending moment resistance	**0.43913 kNm/m**
	Partial safety factors:	
	Material	**2.5**
	Dead load (max)	**1.4**
	Dead load (min)	**0.9**
	Imposed load	**1.6**
	Wind load	**1.4**

Copyright 1986-2024 Fitzroy Systems Ltd.

Location: Wall on grid line A/1-2

Clear height of wall	h=3.5
Length of panel	L=8 m
Thickness of wall	t=150 mm
Support restraint factor	rf=1
Mortar designation to Table 1	mortar=2
Masonry type (1=clay 2=cal silicate 3=conc brick 4=block)	typ(1)=2
Compressive Strength of Units	po=60 N/mm²
Material partial safety factor	gammam=2.5
Density	dens=10 kN/m³
Eccentricity of roof load	ecc=20 mm
Dead load excluding self weight	DL=0.2 kN/m
Imposed load	LL=0.6 kN/m
Wind load	WL=0.15 kN/m²
Moment reduction factor	mrf=1

DESIGN SUMMARY	**Wall height**	**3.5 m**
	Wall length	**8 m**
	Wall thickness	**150 mm**
	Char. compressive strength	**10.5 N/mm²**
	Char. flexural strength	**0.3 N/mm²**
	Design vertical load	**4.915 kN/m**
	Vertical load resistance	**287.7 kN/m**
	Design bending moment	**0.32156 kNm/m**
	Bending moment resistance	**0.51356 kNm/m**
	Partial safety factors:	
	Material	**2.5**
	Dead load (max)	**1.4**
	Dead load (min)	**0.9**
	Imposed load	**1.6**
	Wind load	**1.4**

Copyright 1986-2024 Fitzroy Systems Ltd.

Location: Wall on grid line A/1-2

Clear height of wall	h=0.8
Length of panel	L=1 m
Thickness of wall	t=215 mm
Support restraint factor	rf=1
Mortar designation to Table 1	mortar=3
Masonry type (1=clay 2=cal silicate 3=conc brick 4=block)	typ(1)=3
Compressive Strength of Units	po=5 N/mm²
Material partial safety factor	gammam=2.5
Density	dens=10 kN/m³
Eccentricity of roof load	ecc=20 mm
Dead load excluding self weight	DL=1.2 kN/m
Imposed load	LL=1.6 kN/m
Wind load	WL=3 kN/m²
Moment reduction factor	mrf=1

DESIGN SUMMARY	**Wall height**	**0.8 m**
	Wall length	**1 m**
	Wall thickness	**215 mm**
	Char. compressive strength	**2.4 N/mm²**
	Char. flexural strength	**0.3 N/mm²**
	Design vertical load	**5.444 kN/m**
	Vertical load resistance	**185.09 kN/m**
	Design bending moment	**0.336 kNm/m**
	Bending moment resistance	**0.99094 kNm/m**
	Partial safety factors:	
	Material	**2.5**
	Dead load (max)	**1.4**
	Dead load (min)	**0.9**
	Imposed load	**1.6**
	Wind load	**1.4**

Copyright 1986-2024 Fitzroy Systems Ltd.

Location: Wall on grid line A/1-2

Clear height of wall	h=2.2
Length of panel	L=4 m
Thickness of wall	t=225 mm
Support restraint factor	rf=1
Mortar designation to Table 1	mortar=4
Masonry type (1=clay 2=cal silicate 3=conc brick 4=block)	typ(1)=4
Compressive Strength of Units	po=22.5 N/mm²
Material partial safety factor	gammam=2.5
Density	dens=10 kN/m³
Eccentricity of roof load	ecc=20 mm
Dead load excluding self weight	DL=1.2 kN/m
Imposed load	LL=1.6 kN/m
Wind load	WL=0.25 kN/m²
Moment reduction factor	mrf=1

DESIGN SUMMARY	**Wall height**	**2.2 m**
	Wall length	**4 m**
	Wall thickness	**225 mm**
	Char. compressive strength	**6.6206 N/mm²**
	Char. flexural strength	**0.2 N/mm²**
	Design vertical load	**7.705 kN/m**
	Vertical load resistance	**536.71 kN/m**
	Design bending moment	**0.21175 kNm/m**
	Bending moment resistance	**0.79903 kNm/m**
	Partial safety factors:	
	Material	**2.5**
	Dead load (max)	**1.4**
	Dead load (min)	**0.9**
	Imposed load	**1.6**
	Wind load	**1.4**

Location: Wall on grid line A/1-2

Clear height of wall	h=2.2 m
Length of panel	L=4 m
Thickness of wall	t=140 mm
Support restraint factor	rf=1
Mortar designation to Table NA.2	mortar=3
Masonry type (1=clay 2=cal silicate 3=conc brick 4=block)	typ(1)=1
Compressive strength of units	po=20 N/mm²
Water absorption %age of leaf	water=7 %
Constant K from NA Table NA.4	K(1)=0.5
Height of masonry unit	hu=65 mm
Least horiz. dimension of units	lhd=100 mm
Partial safety factor (material)	gamM=2.3
Density of masonry units	dens=10 kN/m³
Ecc. of floor load on inner leaf	ecc=23.333 mm
Permanent load from above	Gk(1)=0 kN/m
Variable load from above	Qk(1)=0 kN/m
Permanent load from floor	Gk(2)=1.2 kN/m
Variable load from floor	Qk(2)=1.6 kN/m
Horizontal wind load (positive)	Wk=0.25 kN/m²
Perm actions (upper levels)	gamG1=1.35
Perm actions (floor)	gamG2=1.35
Variable actions (vertical load)	gamQ=1.5
Variable actions (horiz.wind)	gamQw=0.75

Design moment at mid-height Mmd=0.085385 kNm/m

DESIGN SUMMARY	**Wall height**	**2.2 m**
	Wall length	**4 m**
	Wall thickness	**140 mm**
	Char. compressive strength	**5.5068 N/mm²**
	Char. flexural strength	**0.4 N/mm²**
	Design vertical load	**6.099 kN/m**
	Design vert load resistance	**89.954 kN/m**
	Partial safety factors:	
	Material	**2.3**
	Permanent load (max)	**1.35**
	Permanent load (min)	**1.0**
	Variable load	**1.5**
	Wind load	**0.75**
	Wall to be constructed using	**Group 1 units**

Location: Wall on grid line A/1-2

Clear height of wall	h=2.2 m
Length of panel	L=4 m
Thickness of wall	t=150 mm
Support restraint factor	rf=0.9
Mortar designation to Table NA.2	mortar=3
Masonry type (1=clay 2=cal silicate 3=conc brick 4=block)	typ(1)=4
Compressive strength of units	po=22.5 N/mm²
Constant K from NA Table NA.4	K(1)=0.5
Height of masonry unit	hu=215 mm
Least horiz. dimension of units	lhd=150 mm
Partial safety factor (material)	gamM=2.3
Density of masonry units	dens=10 kN/m³
Ecc. of floor load on inner leaf	ecc=25 mm
Permanent load from above	Gk(1)=0 kN/m
Variable load from above	Qk(1)=0 kN/m
Permanent load from floor	Gk(2)=1.2 kN/m
Variable load from floor	Qk(2)=1.6 kN/m
Horizontal wind load (positive)	Wk=0.25 kN/m²
Perm actions (upper levels)	gamG1=1.35
Perm actions (floor)	gamG2=1.35
Variable actions (vertical load)	gamQ=1.5
Variable actions (horiz.wind)	gamQw=0.75

Design moment at mid-height Mmd=0.093713 kNm/m

DESIGN SUMMARY	**Wall height**	**2.2 m**
	Wall length	**4 m**
	Wall thickness	**150 mm**
	Char. compressive strength	**7.9646 N/mm²**
	Char. flexural strength	**0.25 N/mm²**
	Design vertical load	**6.2475 kN/m**
	Design vert load resistance	**185.99 kN/m**
	Partial safety factors:	
	Material	**2.3**
	Permanent load (max)	**1.35**
	Permanent load (min)	**1.0**
	Variable load	**1.5**
	Wind load	**0.75**
	Wall to be constructed using	**Group 1 units**

Location: Wall on grid line A/1-2

Clear height of wall	h=3.5 m
Length of panel	L=8 m
Thickness of wall	t=150 mm
Support restraint factor	rf=1
Mortar designation to Table NA.2	mortar=2
Masonry type (1=clay 2=cal silicate 3=conc brick 4=block)	typ(1)=2
Compressive strength of units	po=60 N/mm²
Constant K from NA Table NA.4	K(1)=0.5
Height of masonry unit	hu=65 mm
Least horiz. dimension of units	lhd=100 mm
Partial safety factor (material)	gamM=2.3
Density of masonry units	dens=10 kN/m³
Ecc. of floor load on inner leaf	ecc=25 mm
Permanent load from above	Gk(1)=0 kN/m
Variable load from above	Qk(1)=0 kN/m
Permanent load from floor	Gk(2)=0.2 kN/m
Variable load from floor	Qk(2)=0.6 kN/m
Horizontal wind load (positive)	Wk=0.15 kN/m²
Perm actions (upper levels)	gamG1=1.35
Perm actions (floor)	gamG2=1.35
Variable actions (vertical load)	gamQ=1.5
Variable actions (horiz.wind)	gamQw=0.75

Design moment at mid-height Mmd=0.070707 kNm/m

DESIGN SUMMARY	**Wall height**	**3.5 m**
	Wall length	**8 m**
	Wall thickness	**150 mm**
	Char. compressive strength	**13.419 N/mm²**
	Char. flexural strength	**0.3 N/mm²**
	Design vertical load	**4.7138 kN/m**
	Design vert load resistance	**7.0922 kN/m**
	Partial safety factors:	
	Material	**2.3**
	Permanent load (max)	**1.35**
	Permanent load (min)	**1.0**
	Variable load	**1.5**
	Wind load	**0.75**
	Wall to be constructed using	**Group 1 units**

Location: Wall on grid line A/1-2

Clear height of wall	h=0.8 m
Length of panel	L=1 m
Thickness of wall	t=215 mm
Support restraint factor	rf=1
Mortar designation to Table NA.2	mortar=3
Masonry type (1=clay 2=cal silicate 3=conc brick 4=block)	typ(1)=3
Compressive strength of units	po=5 N/mm²
Constant K from NA Table NA.4	K(1)=0.75
Height of masonry unit	hu=65 mm
Least horiz. dimension of units	lhd=100 mm
Partial safety factor (material)	gamM=2.3
Density of masonry units	dens=10 kN/m³
Ecc. of floor load on inner leaf	ecc=35.833 mm
Permanent load from above	Gk(1)=0 kN/m
Variable load from above	Qk(1)=0 kN/m
Permanent load from floor	Gk(2)=1.2 kN/m
Variable load from floor	Qk(2)=1.6 kN/m
Horizontal wind load (positive)	Wk=3 kN/m²
Perm actions (upper levels)	gamG1=1.35
Perm actions (floor)	gamG2=1.35
Variable actions (vertical load)	gamQ=1.5
Variable actions (horiz.wind)	gamQw=0.75

Design moment at mid-height Mmd=0.11139 kNm/m

DESIGN SUMMARY	**Wall height**	**0.8 m**
	Wall length	**1 m**
	Wall thickness	**215 mm**
	Char. compressive strength	**3.1301 N/mm²**
	Char. flexural strength	**0.3 N/mm²**
	Design vertical load	**5.181 kN/m**
	Design vert load resistance	**133.5 kN/m**
	Partial safety factors:	
	Material	**2.3**
	Permanent load (max)	**1.35**
	Permanent load (min)	**1.0**
	Variable load	**1.5**
	Wind load	**0.75**
	Wall to be constructed using	**Group 1 units**

Location: Wall on grid line A/1-2

Clear height of wall	h=2.2 m
Length of panel	L=4 m
Thickness of wall	t=225 mm
Support restraint factor	rf=1
Mortar designation to Table NA.2	mortar=4
Masonry type (1=clay 2=cal silicate 3=conc brick 4=block)	typ(1)=4
Compressive strength of units	po=22.5 N/mm²
Constant K from NA Table NA.4	K(1)=0.75
Height of masonry unit	hu=215 mm
Least horiz. dimension of units	lhd=225 mm
Partial safety factor (material)	gamM=2.3
Density of masonry units	dens=10 kN/m³
Ecc. of floor load on inner leaf	ecc=37.5 mm
Permanent load from above	Gk(1)=0 kN/m
Variable load from above	Qk(1)=0 kN/m
Permanent load from floor	Gk(2)=1.2 kN/m
Variable load from floor	Qk(2)=1.6 kN/m
Horizontal wind load (positive)	Wk=0.25 kN/m²
Perm actions (upper levels)	gamG1=1.35
Perm actions (floor)	gamG2=1.35
Variable actions (vertical load)	gamQ=1.5
Variable actions (horiz.wind)	gamQw=0.75

Design moment at mid-height Mmd=0.16563 kNm/m

DESIGN SUMMARY	**Wall height**	**2.2 m**
	Wall length	**4 m**
	Wall thickness	**225 mm**
	Char. compressive strength	**8.9893 N/mm²**
	Char. flexural strength	**0.2 N/mm²**
	Design vertical load	**7.3613 kN/m**
	Design vert load resistance	**483.86 kN/m**
	Partial safety factors:	
	Material	**2.3**
	Permanent load (max)	**1.35**
	Permanent load (min)	**1.0**
	Variable load	**1.5**
	Wind load	**0.75**
	Wall to be constructed using	**Group 1 units**

Location: Wall on grid line A/1-2

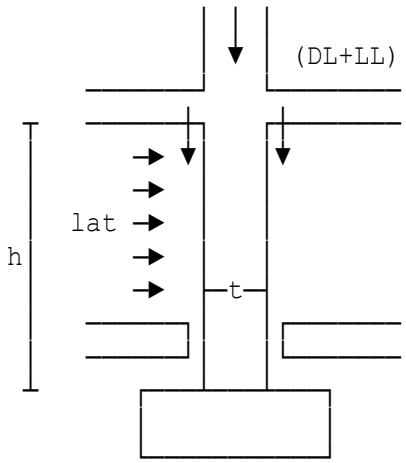

Masonry single leaf wall by effective eccentricities

This calculation are in accordance with BS5628-1:2005 using effective eccentricities as per Clause 28.

If no restraint is offered by the ground floor slab then take h to the top of foundation. Else take h to be the distance between floors as shown.

Support Restraint factor	rf=1
Mortar designation to Table 1	mortar=3
Masonry type (1=clay 2=cal silicate 3=conc brick 4=block)	typ(1)=4
Compressive strength of units	po=10.4 N/mm²
Height	hb=215 mm
Least horizontal dimension	lhd=150 mm
Partial Safety Factor Material	gammam=3.1
Dead load	DL(1)=7 kN/m
Imposed load	LL(1)=10 kN/m
Dead load	DL(2)=10.2 kN/m
Imposed load	LL(2)=12.6 kN/m
Eccentricity of roof/floor load	ecc(2)=20 mm
Dead load	DL(3)=8.6 kN/m
Imposed load	LL(3)=9.5 kN/m
Self weight	DL(5)=10 kN/m
Eccentricity of roof/floor load	ecc(3)=20 mm
Wind load	WL=0.45 kN/m²

DESIGN SUMMARY	**Wall height**	**2.2 m**
	Wall length	**4 m**
	Wall thickness	**150 mm**
	Char comp strength	**6.5405 N/mm²**
	Slenderness ratio	**14.667**

Copyright 1986-2024 Fitzroy Systems Ltd.

	Vert Load (kN/m)	Design Moment (kNm)	Eff Ecc'y (m)	Ecc'y Ratio (>0.05)	Beta	Vert load R'stance (kN/m)	Factor of safety
Case 1	101	0.144	0.001	0.05	0.87	275	2.71
Case 2	82	0.534	0.007	0.05	0.87	275	3.36
Case 3	76.2	0.361	0.005	0.05	0.87	275	3.61
Case 4	57.5	0.534	0.009	0.062	0.856	271	4.71
Case 5	51.7	0.361	0.007	0.05	0.87	275	5.32
Case 6	81.5	0.503	0.006	0.05	0.87	275	3.38
Case 7	50.1	0.5	0.01	0.066	0.85	269	5.37
Case 8	32.2	0.484	0.015	0.1	0.81	256	7.95

Location: Wall on grid line A/1-2

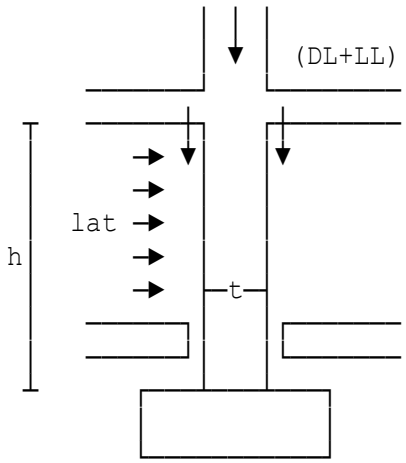

Masonry single leaf wall by effective eccentricities

This calculation are in accordance with BS5628-1:2005 using effective eccentricities as per Clause 28.

If no restraint is offered by the ground floor slab then take h to the top of foundation. Else take h to be the distance between floors as shown.

Support Restraint factor	rf=1
Mortar designation to Table 1	mortar=1
Masonry type (1=clay 2=cal silicate 3=conc brick 4=block)	typ(1)=4
Compressive strength of units	po=10.4 N/mm²
Height	hb=215 mm
Least horizontal dimension	lhd=200 mm
Partial Safety Factor Material	gammam=3.1
Dead load	DL(1)=7 kN/m
Imposed load	LL(1)=10 kN/m
Dead load	DL(2)=10.2 kN/m
Imposed load	LL(2)=12.6 kN/m
Eccentricity of roof/floor load	ecc(2)=20 mm
Dead load	DL(3)=8.6 kN/m
Imposed load	LL(3)=9.5 kN/m
Self weight	DL(5)=10 kN/m
Eccentricity of roof/floor load	ecc(3)=100 mm
Wind load	WL=0.45 kN/m²

DESIGN SUMMARY	**Wall height**	**2.2 m**
	Wall length	**4 m**
	Wall thickness	**200 mm**
	Char comp strength	**5.8929 N/mm²**
	Slenderness ratio	**11**

Copyright 1986-2024 Fitzroy Systems Ltd.

	Vert Load (kN/m)	Design Moment (kNm)	Eff Ecc'y (m)	Ecc'y Ratio (>0.05)	Beta	Vert load R'stance (kN/m)	Factor of safety
Case 1	101	2.04	0.02	0.1	0.874	332	3.28
Case 2	82	0.085	0.001	0.05	0.95	361	4.41
Case 3	76.2	2.54	0.033	0.167	0.732	278	3.65
Case 4	57.5	0.085	0.001	0.05	0.95	361	6.28
Case 5	51.7	2.54	0.049	0.246	0.56	213	4.11
Case 6	81.5	2.01	0.025	0.124	0.824	313	3.85
Case 7	50.1	1.37	0.027	0.137	0.795	302	6.03
Case 8	32.2	1.05	0.032	0.162	0.741	282	8.75

Location: Wall on grid line A/1-2

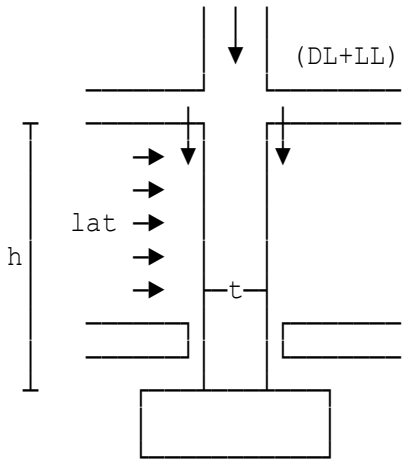

Masonry single leaf wall by effective eccentricities

This calculation are in accordance with BS5628-1:2005 using effective eccentricities as per Clause 28.

If no restraint is offered by the ground floor slab then take h to the top of foundation. Else take h to be the distance between floors as shown.

Support Restraint factor	rf=1
Mortar designation to Table 1	mortar=2
Masonry type (1=clay 2=cal silicate 3=conc brick 4=block)	typ(1)=4
Compressive strength of units	po=60 N/mm²
Height	hb=215 mm
Least horizontal dimension	lhd=150 mm
Partial Safety Factor Material	gammam=3.1
Dead load	DL(1)=7 kN/m
Imposed load	LL(1)=10 kN/m
Dead load	DL(2)=10.2 kN/m
Imposed load	LL(2)=12.6 kN/m
Eccentricity of roof/floor load	ecc(2)=20 mm
Dead load	DL(3)=8.6 kN/m
Imposed load	LL(3)=9.5 kN/m
Self weight	DL(5)=10 kN/m
Eccentricity of roof/floor load	ecc(3)=20 mm
Wind load	WL=0.15 kN/m²

DESIGN SUMMARY	**Wall height**	**4 m**
	Wall length	**8 m**
	Wall thickness	**150 mm**
	Char comp strength	**14.895 N/mm²**
	Slenderness ratio	**26.667**

Copyright 1986-2024 Fitzroy Systems Ltd.

	Vert Load (kN/m)	Design Moment (kNm)	Eff Ecc'y (m)	Ecc'y Ratio (>0.05)	Beta	Vert load R'stance (kN/m)	Factor of safety
Case 1	101	0.144	0.001	0.05	0.417	300	2.96
Case 2	82	0.534	0.007	0.05	0.417	300	3.66
Case 3	76.2	0.361	0.005	0.05	0.417	300	3.94
Case 4	57.5	0.534	0.009	0.062	0.4	288	5.02
Case 5	51.7	0.361	0.007	0.05	0.417	300	5.81
Case 6	81.5	1.4	0.017	0.115	0.328	236	2.9
Case 7	50.1	1.55	0.031	0.206	0.209	151	3
Case 8	32.2	1.53	0.048	0.317	0	0	0

Location: Wall on grid line A/1-2

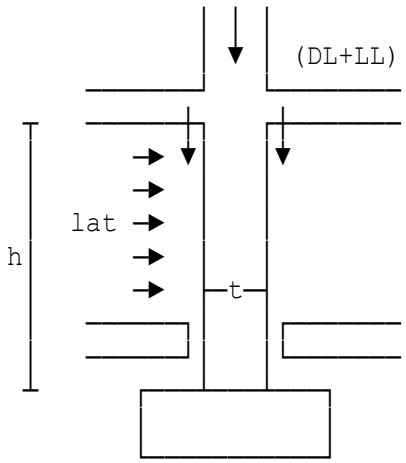

Masonry single leaf wall by effective eccentricities

This calculation are in accordance with BS5628-1:2005 using effective eccentricities as per Clause 28.

If no restraint is offered by the ground floor slab then take h to the top of foundation. Else take h to be the distance between floors as shown.

Support Restraint factor	rf=1
Mortar designation to Table 1	mortar=3
Masonry type (1=clay 2=cal silicate 3=conc brick 4=block)	typ(1)=4
Compressive strength of units	po=5.2 N/mm²
Height	hb=215 mm
Least horizontal dimension	lhd=450 mm
Partial Safety Factor Material	gammam=3.1
Dead load	DL(1)=7 kN/m
Imposed load	LL(1)=10 kN/m
Dead load	DL(2)=10.2 kN/m
Imposed load	LL(2)=12.6 kN/m
Eccentricity of roof/floor load	ecc(2)=20 mm
Dead load	DL(3)=8.6 kN/m
Imposed load	LL(3)=9.5 kN/m
Self weight	DL(5)=10 kN/m
Eccentricity of roof/floor load	ecc(3)=20 mm
Wind load	WL=4.5 kN/m²

DESIGN SUMMARY	**Wall height**	**0.8 m**
	Wall length	**1 m**
	Wall thickness	**450 mm**
	Char comp strength	**2.5 N/mm²**
	Slenderness ratio	**1.7778**

Copyright 1986-2024 Fitzroy Systems Ltd.

	Vert Load (kN/m)	Design Moment (kNm)	Eff Ecc'y (m)	Ecc'y Ratio (>0.05)	Beta	Vert load R'stance (kN/m)	Factor of safety
Case 1	101	0.144	0.001	0.05	1	363	3.58
Case 2	82	0.534	0.007	0.05	1	363	4.43
Case 3	76.2	0.361	0.005	0.05	1	363	4.76
Case 4	57.5	0.534	0.009	0.05	1	363	6.31
Case 5	51.7	0.361	0.007	0.05	1	363	7.02
Case 6	81.5	0.545	0.007	0.05	1	363	4.45
Case 7	50.1	0.549	0.011	0.05	1	363	7.24
Case 8	32.2	0.533	0.017	0.05	1	363	11.3

Location: Wall on grid line A/1-2

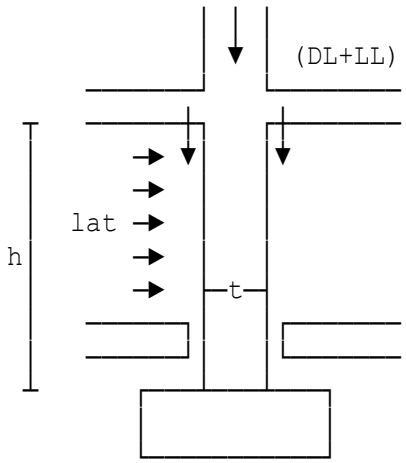

Masonry single leaf wall by effective eccentricities

This calculation are in accordance with BS5628-1:2005 using effective eccentricities as per Clause 28.

If no restraint is offered by the ground floor slab then take h to the top of foundation. Else take h to be the distance between floors as shown.

Support Restraint factor	rf=1
Mortar designation to Table 1	mortar=4
Masonry type (1=clay 2=cal silicate 3=conc brick 4=block)	typ(1)=4
Compressive strength of units	po=10.4 N/mm²
Height	hb=215 mm
Least horizontal dimension	lhd=100 mm
Partial Safety Factor Material	gammam=3.1
Dead load	DL(1)=7 kN/m
Imposed load	LL(1)=10 kN/m
Dead load	DL(2)=10.2 kN/m
Imposed load	LL(2)=12.6 kN/m
Eccentricity of roof/floor load	ecc(2)=20 mm
Dead load	DL(3)=8.6 kN/m
Imposed load	LL(3)=9.5 kN/m
Self weight	DL(5)=10 kN/m
Eccentricity of roof/floor load	ecc(3)=20 mm
Wind load	WL=0.45 kN/m²

DESIGN SUMMARY	**Wall height**	**2.2 m**
	Wall length	**4 m**
	Wall thickness	**100 mm**
	Char comp strength	**7 N/mm²**
	Slenderness ratio	**22**

Copyright 1986-2024 Fitzroy Systems Ltd.

	Vert Load (kN/m)	Design Moment (kNm)	Eff Ecc'y (m)	Ecc'y Ratio (>0.05)	Beta	Vert load R'stance (kN/m)	Factor of safety
Case 1	101	0.144	0.001	0.05	0.62	140	1.38
Case 2	82	0.534	0.007	0.065	0.602	136	1.66
Case 3	76.2	0.361	0.005	0.05	0.62	140	1.84
Case 4	57.5	0.534	0.009	0.093	0.569	128	2.23
Case 5	51.7	0.361	0.007	0.07	0.596	135	2.6
Case 6	81.5	0.503	0.006	0.062	0.606	137	1.68
Case 7	50.1	0.5	0.01	0.1	0.56	127	2.52
Case 8	32.2	0.484	0.015	0.15	0.495	112	3.47

Location: Wall on grid line A/1-2

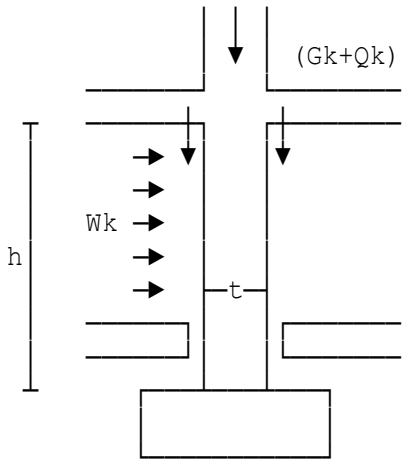

Masonry single leaf wall by effective eccentricities

This calculation is in accordance with EC6 and is based on effective eccentricities.

If no restraint is offered by the ground floor slab then take h to to the top of foundation, otherwise take h to be the distance between floors as shown.

Support Restraint factor	rf=1
Mortar designation to Table NA.2	mortar=3
Masonry type (1=clay 2=cal silicate 3=conc brick 4=block)	typ(1)=4
Compressive strength of units	po=10.4 N/mm²
Constant K from NA Table NA.4	K(1)=0.75
Height of masonry unit	hu=215 mm
Least horiz. dimension of units	lhd=150 mm
Partial safety factor (material)	gamM=3
Permanent Load(1)	Gk(1)=7 kN/m
Variable Load(1)	Qk(1)=10 kN/m
Permanent Load(2)	Gk(2)=10.2 kN/m
Variable Load(2)	Qk(2)=12.6 kN/m
Eccentricity of roof/floor load	ecc(2)=20 mm
Permanent Load(3)	Gk(3)=8.6 kN/m
Variable Load(3)	Qk(3)=9.5 kN/m
Wall weight at mid-height	Gk(5)=10 kN/m
Eccentricity of roof/floor load	ecc(3)=20 mm
Factor Ψo for floor variable load	psi0f=0.7

Design moment at mid-height Mmd=0.08172 kNm/m

DESIGN SUMMARY	**Wall height**	**2.2 m**
	Wall length	**4 m**
	Wall thickness	**150 mm**
	Char comp strength	**6.9606 N/mm²**
	Slenderness ratio	**14.667**

	Vert Load at mid height (kN/m)	Design Moment top of wall (kNm)	Ecc'y top of wall (mm)	Ecc'y at mid height (mm)	Capacity reduction factor Φ	Vert load R'stance Nrd (kN/m)	Factor of safety
LC 1	96.5	0.136	7.5	7.5	0.752	262	2.71
LC 2	78.4	0.499	12.6	8.7	0.735	256	3.26
LC 3	73	0.334	10.5	7.63	0.75	261	3.58
LC 4	55.7	0.499	15.6	10.3	0.713	248	4.46
LC 5	50.3	0.334	13	8.87	0.733	255	5.07
LC 6	82	0.108	7.5	10.7	0.707	246	3
LC 7	48.3	0.043	7.5	13.9	0.661	230	4.76
LC 8	32.2	0.029	7.5	18.1	0.601	209	6.5
LC 9	86.5	0.108	7.5	8	0.745	259	3
LC 10	87.7	0.222	7.88	8.73	0.735	256	2.92
LC 11	86.3	0.023	7.5	7.5	0.752	262	3.03

The vertical load resistance taking into consideration the resultant eccentricity due to vertical and wind loads is greater than the design load for each load combination. Hence wall is satisfactory.

Location: Wall on grid line A/1-2

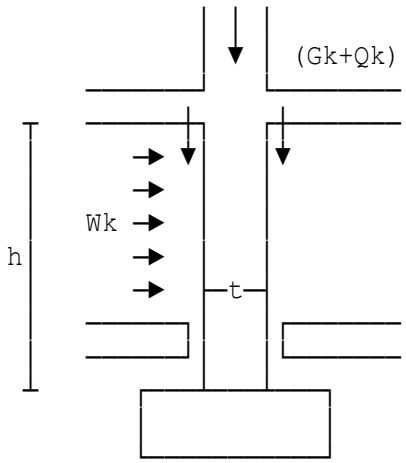

Masonry single leaf wall by effective eccentricities

This calculation is in accordance with EC6 and is based on effective eccentricities.

If no restraint is offered by the ground floor slab then take h to to the top of foundation, otherwise take h to be the distance between floors as shown.

Support Restraint factor	rf=1
Mortar designation to Table NA.2	mortar=1
Masonry type (1=clay 2=cal silicate 3=conc brick 4=block)	typ(1)=4
Compressive strength of units	po=10.4 N/mm²
Constant K from NA Table NA.4	K(1)=0.75
Height of masonry unit	hu=215 mm
Least horiz. dimension of units	lhd=200 mm
Partial safety factor (material)	gamM=3
Permanent Load(1)	Gk(1)=7 kN/m
Variable Load(1)	Qk(1)=10 kN/m
Permanent Load(2)	Gk(2)=10.2 kN/m
Variable Load(2)	Qk(2)=12.6 kN/m
Eccentricity of roof/floor load	ecc(2)=20 mm
Permanent Load(3)	Gk(3)=8.6 kN/m
Variable Load(3)	Qk(3)=9.5 kN/m
Wall weight at mid-height	Gk(5)=10 kN/m
Eccentricity of roof/floor load	ecc(3)=100 mm
Factor Ψo for floor variable load	psi0f=0.7

Design moment at mid-height Mmd=1.1596 kNm/m

DESIGN SUMMARY	**Wall height**	**2.2 m**
	Wall length	**4 m**
	Wall thickness	**200 mm**
	Char comp strength	**9.1423 N/mm²**
	Slenderness ratio	**11**

	Vert Load at mid height (kN/m)	Design Moment top of wall (kNm)	Ecc'y top of wall (mm)	Ecc'y at mid height (mm)	Capacity reduction factor Φ	Vert load R'stance Nrd (kN/m)	Factor of safety
LC 1	96.5	1.93	28.2	16.9	0.718	438	4.54
LC 2	78.4	0.121	10	10	0.822	501	6.39
LC 3	73	2.4	45.2	24.6	0.548	334	4.58
LC 4	55.7	0.121	10	10	0.822	501	8.99
LC 5	50.3	2.4	63	33.5	0.37	226	4.48
LC 6	82	1.62	28.5	21.7	0.7	427	5.2
LC 7	48.3	0.886	30.3	24.4	0.672	410	8.48
LC 8	32.2	0.59	30.3	28.6	0.628	383	11.9
LC 9	86.5	1.62	27.1	18.5	0.729	444	5.14
LC 10	87.7	1.51	25.2	17.5	0.743	453	5.16
LC 11	86.3	2.05	33	21.5	0.67	408	4.73

The vertical load resistance taking into consideration the resultant eccentricity due to vertical and wind loads is greater than the design load for each load combination. Hence wall is satisfactory.

Location: Wall on grid line A/1-2

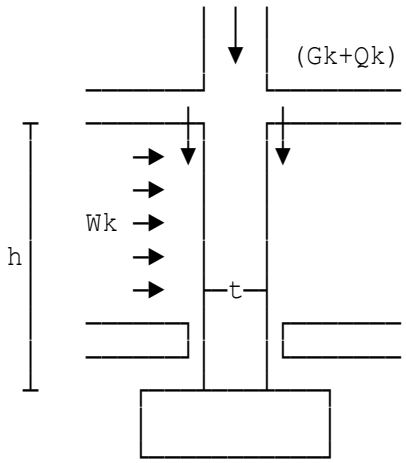

Masonry single leaf wall by effective eccentricities

This calculation is in accordance with EC6 and is based on effective eccentricities.

If no restraint is offered by the ground floor slab then take h to to the top of foundation, otherwise take h to be the distance between floors as shown.

Support Restraint factor	rf=1
Mortar designation to Table NA.2	mortar=2
Masonry type (1=clay 2=cal silicate 3=conc brick 4=block)	typ(1)=4
Compressive strength of units	po=60 N/mm²
Constant K from NA Table NA.4	K(1)=0.75
Height of masonry unit	hu=215 mm
Least horiz. dimension of units	lhd=150 mm
Partial safety factor (material)	gamM=3
Permanent Load(1)	Gk(1)=7 kN/m
Variable Load(1)	Qk(1)=10 kN/m
Permanent Load(2)	Gk(2)=10.2 kN/m
Variable Load(2)	Qk(2)=12.6 kN/m
Eccentricity of roof/floor load	ecc(2)=20 mm
Permanent Load(3)	Gk(3)=8.6 kN/m
Variable Load(3)	Qk(3)=9.5 kN/m
Wall weight at mid-height	Gk(5)=10 kN/m
Eccentricity of roof/floor load	ecc(3)=20 mm
Factor Ψo for floor variable load	psi0f=0.7

Design moment at mid-height Mmd=0.08172 kNm/m

DESIGN SUMMARY	**Wall height**	**4 m**
	Wall length	**8 m**
	Wall thickness	**150 mm**
	Char comp strength	**26.808 N/mm²**
	Slenderness ratio	**26.667**

	Vert Load at mid height (kN/m)	Design Moment top of wall (kNm)	Ecc'y top of wall (mm)	Ecc'y at mid height (mm)	Capacity reduction factor Φ	Vert load R'stance Nrd (kN/m)	Factor of safety
LC 1	96.5	0.136	10.5	9.74	0.425	569	5.9
LC 2	78.4	0.499	16.6	12.7	0.384	515	6.57
LC 3	73	0.334	14.5	11.6	0.399	535	7.33
LC 4	55.7	0.499	19.6	14.3	0.363	487	8.74
LC 5	50.3	0.334	17	12.9	0.382	512	10.2
LC 6	82	0.108	10.5	15.2	0.351	470	5.74
LC 7	48.3	0.043	10.1	18.7	0.305	409	8.46
LC 8	32.2	0.029	10.1	23.4	0.247	331	10.3
LC 9	86.5	0.108	10.4	12.2	0.391	524	6.06
LC 10	87.7	0.222	11.9	13	0.381	511	5.82
LC 11	86.3	0.023	9.2	11.7	0.398	533	6.18

The vertical load resistance taking into consideration the resultant eccentricity due to vertical and wind loads is greater than the design load for each load combination. Hence wall is satisfactory.

Location: Wall on grid line A/1-2

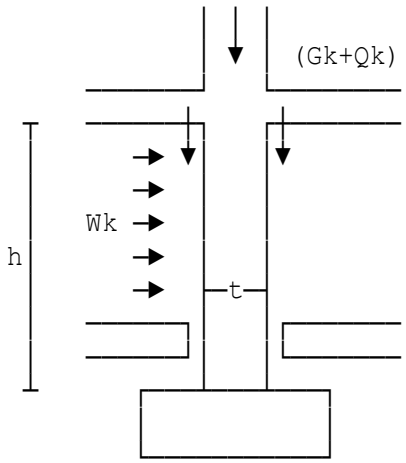

Masonry single leaf wall by effective eccentricities

This calculation is in accordance with EC6 and is based on effective eccentricities.

If no restraint is offered by the ground floor slab then take h to to the top of foundation, otherwise take h to be the distance between floors as shown.

Support Restraint factor	rf=1
Mortar designation to Table NA.2	mortar=3
Masonry type (1=clay 2=cal silicate 3=conc brick 4=block)	typ(1)=4
Compressive strength of units	po=5.2 N/mm²
Constant K from NA Table NA.4	K(1)=0.75
Height of masonry unit	hu=215 mm
Least horiz. dimension of units	lhd=450 mm
Partial safety factor (material)	gamM=3
Permanent Load(1)	Gk(1)=7 kN/m
Variable Load(1)	Qk(1)=10 kN/m
Permanent Load(2)	Gk(2)=10.2 kN/m
Variable Load(2)	Qk(2)=12.6 kN/m
Eccentricity of roof/floor load	ecc(2)=20 mm
Permanent Load(3)	Gk(3)=8.6 kN/m
Variable Load(3)	Qk(3)=9.5 kN/m
Wall weight at mid-height	Gk(5)=10 kN/m
Eccentricity of roof/floor load	ecc(3)=20 mm
Factor Ψo for floor variable load	psi0f=0.7

Design moment at mid-height Mmd=0.08172 kNm/m

DESIGN SUMMARY	**Wall height**	**0.8 m**
	Wall length	**1 m**
	Wall thickness	**450 mm**
	Char comp strength	**3.8902 N/mm²**
	Slenderness ratio	**1.7778**

	Vert Load at mid height (kN/m)	Design Moment top of wall (kNm)	Ecc'y top of wall (mm)	Ecc'y at mid height (mm)	Capacity reduction factor Φ	Vert load R'stance Nrd (kN/m)	Factor of safety
LC 1	96.5	0.136	22.5	22.5	0.9	525	5.44
LC 2	78.4	0.499	22.5	22.5	0.9	525	6.7
LC 3	73	0.334	22.5	22.5	0.9	525	7.19
LC 4	55.7	0.499	22.5	22.5	0.9	525	9.43
LC 5	50.3	0.334	22.5	22.5	0.9	525	10.4
LC 6	82	0.108	22.5	22.5	0.9	525	6.4
LC 7	48.3	0.043	22.5	22.5	0.9	525	10.9
LC 8	32.2	0.029	22.5	22.5	0.9	525	16.3
LC 9	86.5	0.108	22.5	22.5	0.9	525	6.07
LC 10	87.7	0.222	22.5	22.5	0.9	525	5.99
LC 11	86.3	0.023	22.5	22.5	0.9	525	6.09

The vertical load resistance taking into consideration the resultant eccentricity due to vertical and wind loads is greater than the design load for each load combination. Hence wall is satisfactory.

Location: Wall on grid line A/1-2

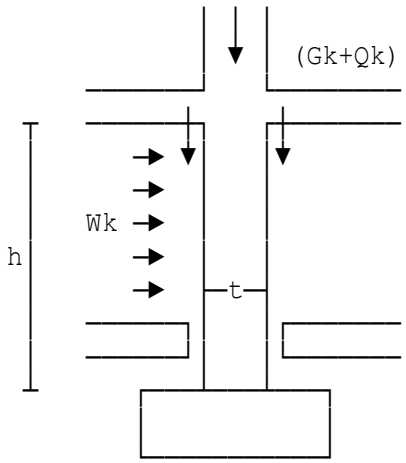

Masonry single leaf wall by effective eccentricities

This calculation is in accordance with EC6 and is based on effective eccentricities.

If no restraint is offered by the ground floor slab then take h to to the top of foundation, otherwise take h to be the distance between floors as shown.

Support Restraint factor	rf=1
Mortar designation to Table NA.2	mortar=4
Masonry type (1=clay 2=cal silicate 3=conc brick 4=block)	typ(1)=4
Compressive strength of units	po=10.4 N/mm²
Constant K from NA Table NA.4	K(1)=0.75
Height of masonry unit	hu=215 mm
Least horiz. dimension of units	lhd=100 mm
Partial safety factor (material)	gamM=3
Permanent Load(1)	Gk(1)=7 kN/m
Variable Load(1)	Qk(1)=10 kN/m
Permanent Load(2)	Gk(2)=10.2 kN/m
Variable Load(2)	Qk(2)=12.6 kN/m
Eccentricity of roof/floor load	ecc(2)=20 mm
Permanent Load(3)	Gk(3)=8.6 kN/m
Variable Load(3)	Qk(3)=9.5 kN/m
Wall weight at mid-height	Gk(5)=10 kN/m
Eccentricity of roof/floor load	ecc(3)=20 mm
Factor Ψo for floor variable load	psi0f=0.7

Design moment at mid-height Mmd=0.08172 kNm/m

DESIGN SUMMARY	**Wall height**	**2.2 m**
	Wall length	**4 m**
	Wall thickness	**100 mm**
	Char comp strength	**5.9595 N/mm²**
	Slenderness ratio	**22**

	Vert Load at mid height (kN/m)	Design Moment top of wall (kNm)	Ecc'y top of wall (mm)	Ecc'y at mid height (mm)	Capacity reduction factor Φ	Vert load R'stance Nrd (kN/m)	Factor of safety
LC 1	96.5	0.136	6.53	5.74	0.56	111	1.15
LC 2	78.4	0.499	12.6	8.7	0.495	98.3	1.25
LC 3	73	0.334	10.5	7.63	0.519	103	1.41
LC 4	55.7	0.499	15.6	10.3	0.462	91.8	1.65
LC 5	50.3	0.334	13	8.87	0.492	97.7	1.94
LC 6	82	0.108	6.47	10.7	0.454	90.2	1.1
LC 7	48.3	0.043	6.12	13.9	0.386	76.7	1.59
LC 8	32.2	0.029	6.14	18.1	0.301	59.8	1.86
LC 9	86.5	0.108	6.37	8	0.511	102	1.17
LC 10	87.7	0.222	7.88	8.73	0.495	98.3	1.12
LC 11	86.3	0.023	5.2	7.42	0.523	104	1.2

The vertical load resistance taking into consideration the resultant eccentricity due to vertical and wind loads is greater than the design load for each load combination. Hence wall is satisfactory.

Location: Wall on grid line A/1-2

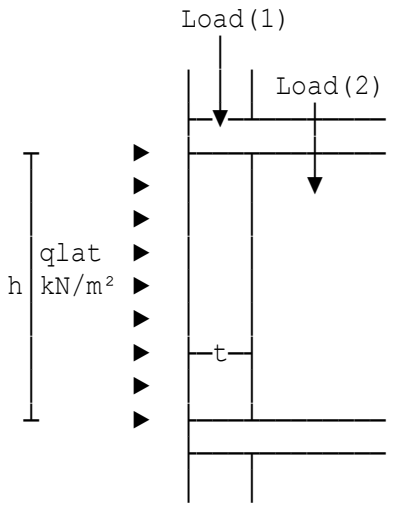

Lateral resistance of vertically loaded single leaf wall by arching

This calculation is in accordance with BS5628-1:2005 being the Code of practice for use of masonry - Part 1: Structural use of unreinforced masonry.

The form of this calculation is in accordance with Clause 32.8 of the code of practice.

Clear height of wall	h=2 m
Thickness of wall	t=100 mm
Length of wall panel	l=3.5 m
Support restraint factor	rf=0.75
Mortar designation to Table 1	mortar=3
Masonry type (1=clay 2=cal silicate 3=conc brick 4=block)	typ(1)=1
Compressive Strength of Units	po=20 N/mm²
Partial Safety Factor Material	gammam=2.5
Dead load	DL(1)=20 kN/m
Imposed load	LL(1)=10 kN/m
Dead load	DL(2)=8 kN/m
Imposed load	LL(2)=5 kN/m
Eccentricity of floor loads	ecc(2)=16.667 mm
Number of returns	nr=1

DESIGN SUMMARY

Wall height	**2 m**
Wall length	**3.5 m**
Wall thickness	**100 mm**
Char comp strength	**5 N/mm²**
Horizontal capacity by arching (Clause 32.8)	
Case 1 - normal loading	**3.36 kN/m²**
Case 2 - abnormal loading	**3.822 kN/m²**

Location: Wall on grid line A/1-2

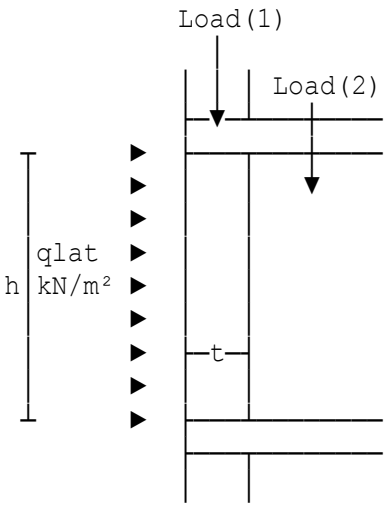

Lateral resistance of vertically loaded single leaf wall by arching

This calculation is in accordance with BS5628-1:2005 being the Code of practice for use of masonry - Part 1: Structural use of unreinforced masonry.

The form of this calculation is in accordance with Clause 32.8 of the code of practice.

Clear height of wall	h=2 m
Thickness of wall	t=100 mm
Length of wall panel	l=3.5 m
Support restraint factor	rf=0.75
Mortar designation to Table 1	mortar=2
Masonry type (1=clay 2=cal silicate 3=conc brick 4=block)	typ(1)=4
Height	hb=215 mm
Least horiz dimension	lhd=100 mm
Compressive Strength of Units	po=10.4 N/mm²
Partial Safety Factor Material	gammam=3.1
Dead load	DL(1)=20 kN/m
Imposed load	LL(1)=10 kN/m
Dead load	DL(2)=8 kN/m
Imposed load	LL(2)=5 kN/m
Eccentricity of floor loads	ecc(2)=16.667 mm
Number of returns	nr=0

DESIGN SUMMARY

Wall height	**2 m**
Wall length	**3.5 m**
Wall thickness	**100 mm**
Char comp strength	**8.4 N/mm²**
Horizontal capacity by arching (Clause 32.8)	
Case 1 - normal loading	**2.8 kN/m²**
Case 2 - abnormal loading	**3.185 kN/m²**

Location: Wall on grid line A/1-2

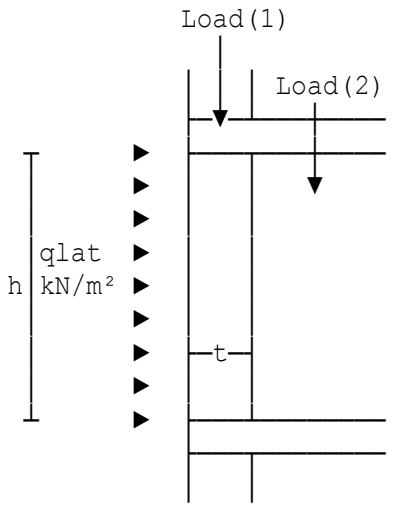

Lateral resistance of vertically loaded single leaf wall by arching

This calculation is in accordance with BS5628-1:2005 being the Code of practice for use of masonry - Part 1: Structural use of unreinforced masonry.

The form of this calculation is in accordance with Clause 32.8 of the code of practice.

Clear height of wall	h=3 m
Thickness of wall	t=150 mm
Length of wall panel	l=8 m
Support restraint factor	rf=0.75
Mortar designation to Table 1	mortar=2
Masonry type (1=clay 2=cal silicate 3=conc brick 4=block)	typ(1)=4
Height	hb=215 mm
Least horiz dimension	lhd=100 mm
Compressive Strength of Units	po=60 N/mm²
Partial Safety Factor Material	gammam=3.1
Dead load	DL(1)=20 kN/m
Imposed load	LL(1)=10 kN/m
Dead load	DL(2)=8 kN/m
Imposed load	LL(2)=5 kN/m
Eccentricity of floor loads	ecc(2)=25 mm
Number of returns	nr=2

DESIGN SUMMARY

Wall height	**3 m**
Wall length	**8 m**
Wall thickness	**150 mm**
Char comp strength	**18.7 N/mm²**
Horizontal capacity by arching (Clause 32.8)	
Case 1 - normal loading	**2.4267 kN/m²**
Case 2 - abnormal loading	**2.7603 kN/m²**

Location: Wall on grid line A/1-2

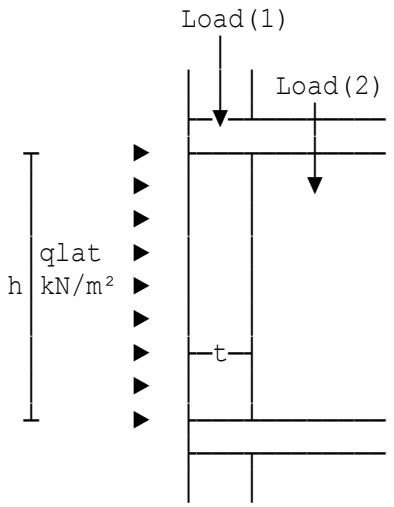

Lateral resistance of vertically loaded single leaf wall by arching

This calculation is in accordance with BS5628-1:2005 being the Code of practice for use of masonry - Part 1: Structural use of unreinforced masonry.

The form of this calculation is in accordance with Clause 32.8 of the code of practice.

Clear height of wall	h=0.8 m
Thickness of wall	t=450 mm
Length of wall panel	l=1 m
Support restraint factor	rf=0.75
Mortar designation to Table 1	mortar=3
Masonry type (1=clay 2=cal silicate 3=conc brick 4=block)	typ(1)=4
Height	hb=215 mm
Least horiz dimension	lhd=100 mm
Compressive Strength of Units	po=5.2 N/mm²
Partial Safety Factor Material	gammam=3.1
Dead load	DL(1)=50 kN/m
Imposed load	LL(1)=20 kN/m
Dead load	DL(2)=8 kN/m
Imposed load	LL(2)=5 kN/m
Eccentricity of floor loads	ecc(2)=75 mm
Number of returns	nr=1

DESIGN SUMMARY

Wall height	**0.8 m**
Wall length	**1 m**
Wall thickness	**450 mm**
Char comp strength	**5 N/mm²**
Horizontal capacity by arching (Clause 32.8)	
Case 1 - normal loading	**228.37 kN/m²**
Case 2 - abnormal loading	**251.41 kN/m²**
Case 3 - protected member	**477.68 kN/m²**

Location: Wall on grid line A/1-2

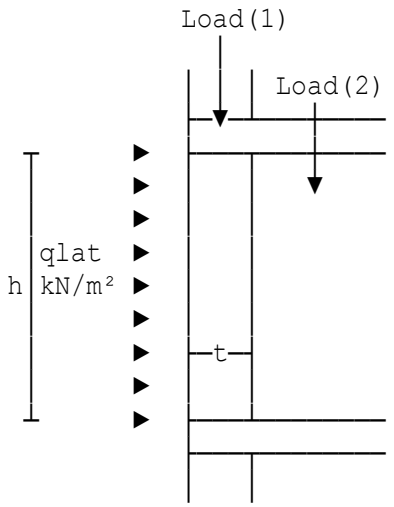

Lateral resistance of vertically loaded single leaf wall by arching

This calculation is in accordance with BS5628-1:2005 being the Code of practice for use of masonry - Part 1: Structural use of unreinforced masonry.

The form of this calculation is in accordance with Clause 32.8 of the code of practice.

Clear height of wall	h=2 m
Thickness of wall	t=100 mm
Length of wall panel	l=3.5 m
Support restraint factor	rf=0.75
Mortar designation to Table 1	mortar=4
Masonry type (1=clay 2=cal silicate 3=conc brick 4=block)	typ(1)=4
Height	hb=215 mm
Least horiz dimension	lhd=100 mm
Compressive Strength of Units	po=10.4 N/mm²
Partial Safety Factor Material	gammam=3.1
Dead load	DL(1)=20 kN/m
Imposed load	LL(1)=10 kN/m
Dead load	DL(2)=8 kN/m
Imposed load	LL(2)=5 kN/m
Eccentricity of floor loads	ecc(2)=16.667 mm
Number of returns	nr=1

DESIGN SUMMARY

Wall height	**2 m**
Wall length	**3.5 m**
Wall thickness	**100 mm**
Char comp strength	**7 N/mm²**
Horizontal capacity by arching (Clause 32.8)	
Case 1 - normal loading	**3.36 kN/m²**
Case 2 - abnormal loading	**3.822 kN/m²**

Location: Wall on grid line A/1-2

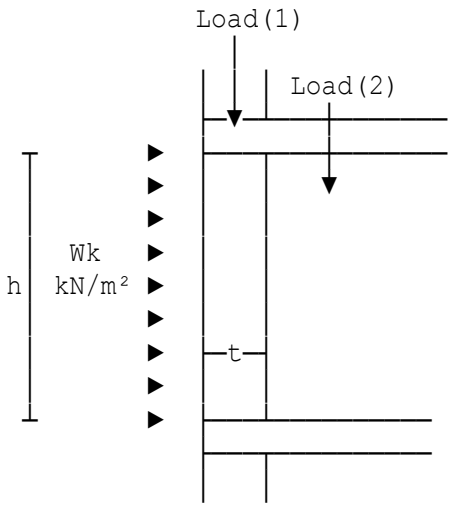

Lateral resistance of vertically loaded single leaf wall by arching

This Calculation is in accordance with EC6 - Design of masonry structures Part 1-1: General rules for reinforced and unreinforced masonry structures.

The form of this calculation is in accordance with section 6 of the code of practice.

Wk = design lateral strength

Clear height of wall	h=2 m
Thickness of wall	t=100 mm
Length of wall panel	L=3.5 m
Support restraint factor	rf=0.75
Mortar designation to Table NA.2	mortar=3
Masonry type (1=clay 2=cal silicate 3=conc brick 4=block)	typ(1)=1
Compressive strength of units	po=20 N/mm²
Constant K from NA Table NA.4	K(1)=0.5
Height of masonry unit	hu=65 mm
Least horiz. dimension of units	lhd=100 mm
Partial safety factor (material)	gamM=2.6
Permanent Load(1)	Gk(1)=20 kN/m
Variable Load(1)	Qk(1)=10 kN/m
Permanent Load(2)	Gk(2)=8 kN/m
Variable Load(2)	Qk(2)=5 kN/m
Ecc. of floor load on inner leaf	ecc(2)=16.667 mm
Perm actions (upper levels)	gamG1=1.35
Perm actions (floor)	gamG2=1.35
Variable actions (vertical load)	gamQ=1.5
Weight of wall at mid-height	Gkws=2.2 kN/m
horizontal loads (e.g. wind load)	ehe=0 mm
loads (e.g. wind load)	ehm=0 mm
Design moment at mid-height	Mmd=0.19202 kNm/m

Leading variable load factor Ψ1 psi1=0.5
Other variable load factor Ψ2 psi2=0.3

DESIGN SUMMARY	**Wall height**	**2 m**
	Wall length	**3.5 m**
	Wall thickness	**100 mm**
	Char compressive strength	**5.5068 N/mm²**
	Design lateral strength by arching (Cl. 6.3.2)	
	Case 1 - normal loading	**5.295 kN/m²**
	Case 2 - abnormal loading	**5.295 kN/m²**

Location: Wall on grid line A/1-2

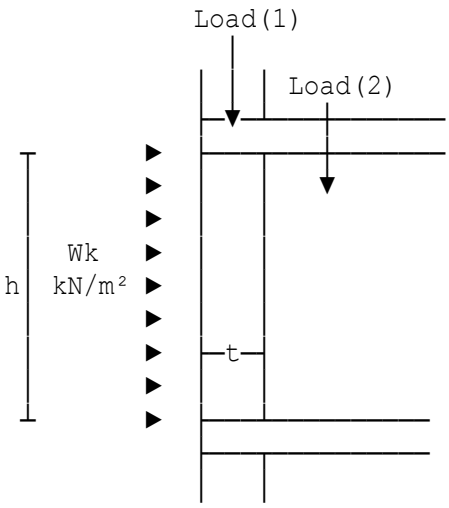

Lateral resistance of vertically loaded single leaf wall by arching

This Calculation is in accordance with EC6 - Design of masonry structures Part 1-1: General rules for reinforced and unreinforced masonry structures.

The form of this calculation is in accordance with section 6 of the code of practice.

Wk = design lateral strength

Clear height of wall	h=2 m
Thickness of wall	t=100 mm
Length of wall panel	L=3.5 m
Support restraint factor	rf=0.75
Mortar designation to Table NA.2	mortar=2
Masonry type (1=clay 2=cal silicate 3=conc brick 4=block)	typ(1)=4
Compressive strength of units	po=10.4 N/mm²
Constant K from NA Table NA.4	K(1)=0.75
Normalised mean comp strength	fbn(1)=10.4 N/mm²
Partial safety factor (material)	gamM=3
Permanent Load(1)	Gk(1)=20 kN/m
Variable Load(1)	Qk(1)=10 kN/m
Permanent Load(2)	Gk(2)=8 kN/m
Variable Load(2)	Qk(2)=5 kN/m
Ecc. of floor load on inner leaf	ecc(2)=16.667 mm
Perm actions (upper levels)	gamG1=1.35
Perm actions (floor)	gamG2=1.35
Variable actions (vertical load)	gamQ=1.5

Weight of wall at mid-height	Gkws=1 kN/m
horizontal loads (e.g. wind load)	ehe=0 mm
loads (e.g. wind load)	ehm=0 mm
Design moment at mid-height	Mmd=0.1871 kNm/m

Leading variable load factor Ψ1 psi1=0.5
Other variable load factor Ψ2 psi2=0.3

DESIGN SUMMARY	**Wall height**	**2 m**
	Wall length	**3.5 m**
	Wall thickness	**100 mm**
	Char compressive strength	**6.6135 N/mm²**
	Design lateral strength by arching (Cl. 6.3.2)	
	Case 1 - normal loading	**5.5112 kN/m²**
	Case 2 - abnormal loading	**5.5112 kN/m²**

Location: Wall on grid line A/1-2

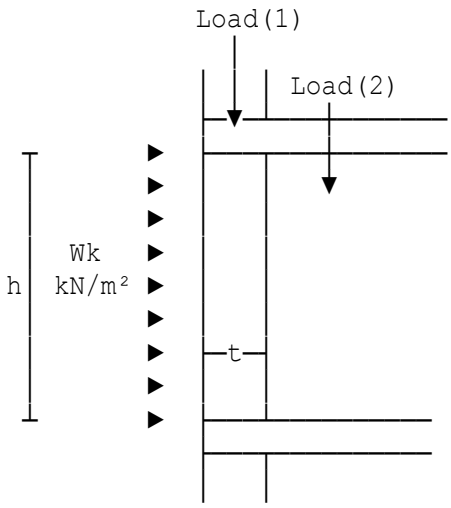

Lateral resistance of vertically loaded single leaf wall by arching

This Calculation is in accordance with EC6 - Design of masonry structures Part 1-1: General rules for reinforced and unreinforced masonry structures.

The form of this calculation is in accordance with section 6 of the code of practice.

Wk = design lateral strength

Clear height of wall	h=3 m
Thickness of wall	t=150 mm
Length of wall panel	L=8 m
Support restraint factor	rf=0.75
Mortar designation to Table NA.2	mortar=2
Masonry type (1=clay 2=cal silicate 3=conc brick 4=block)	typ(1)=4
Compressive strength of units	po=60 N/mm²
Constant K from NA Table NA.4	K(1)=0.75
Normalised mean comp strength	fbn(1)=60 N/mm²
Partial safety factor (material)	gamM=3
Permanent Load(1)	Gk(1)=20 kN/m
Variable Load(1)	Qk(1)=10 kN/m
Permanent Load(2)	Gk(2)=8 kN/m
Variable Load(2)	Qk(2)=5 kN/m
Ecc. of floor load on inner leaf	ecc(2)=25 mm
Perm actions (upper levels)	gamG1=1.35
Perm actions (floor)	gamG2=1.35
Variable actions (vertical load)	gamQ=1.5

Weight of wall at mid-height	Gkws=2.25 kN/m
horizontal loads (e.g. wind load)	ehe=0 mm
loads (e.g. wind load)	ehm=0 mm
Design moment at mid-height	Mmd=0.28833 kNm/m

Leading variable load factor Ψ1 psi1=0.5
Other variable load factor Ψ2 psi2=0.3

DESIGN SUMMARY	**Wall height**	**3 m**
	Wall length	**8 m**
	Wall thickness	**150 mm**
	Char compressive strength	**22.553 N/mm²**
	Design lateral strength by arching (Cl. 6.3.2)	
	Case 1 - normal loading	**18.795 kN/m²**
	Case 2 - abnormal loading	**18.795 kN/m²**
	Case 3 - protected member	**37.589 kN/m²**

Location: Wall on grid line A/1-2

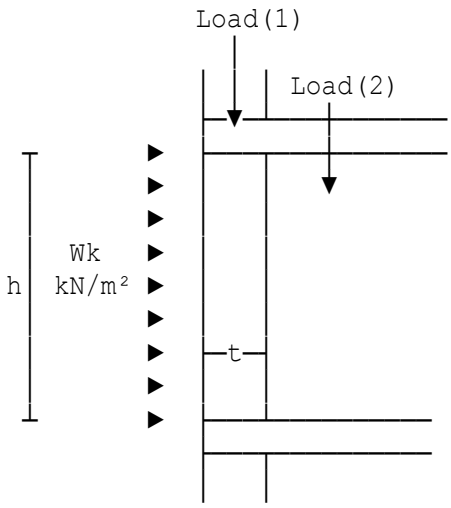

Lateral resistance of vertically loaded single leaf wall by arching

This Calculation is in accordance with EC6 - Design of masonry structures Part 1-1: General rules for reinforced and unreinforced masonry structures.

The form of this calculation is in accordance with section 6 of the code of practice.

Wk = design lateral strength

Clear height of wall	h=0.8 m
Thickness of wall	t=450 mm
Length of wall panel	L=1 m
Support restraint factor	rf=0.75
Mortar designation to Table NA.2	mortar=3
Masonry type (1=clay 2=cal silicate 3=conc brick 4=block)	typ(1)=4
Compressive strength of units	po=5.2 N/mm²
Constant K from NA Table NA.4	K(1)=0.75
Normalised mean comp strength	fbn(1)=5.2 N/mm²
Partial safety factor (material)	gamM=3
Permanent Load(1)	Gk(1)=50 kN/m
Variable Load(1)	Qk(1)=20 kN/m
Permanent Load(2)	Gk(2)=8 kN/m
Variable Load(2)	Qk(2)=5 kN/m
Ecc. of floor load on inner leaf	ecc(2)=75 mm
Perm actions (upper levels)	gamG1=1.35
Perm actions (floor)	gamG2=1.35
Variable actions (vertical load)	gamQ=1.5
Weight of wall at mid-height	Gkws=1.8 kN/m
horizontal loads (e.g. wind load)	ehe=0 mm
loads (e.g. wind load)	ehm=0 mm
Design moment at mid-height	Mmd=0.84078 kNm/m

Leading variable load factor Ψ1 psi1=0.5
Other variable load factor Ψ2 psi2=0.3

DESIGN SUMMARY	**Wall height**	**0.8 m**
	Wall length	**1 m**
	Wall thickness	**450 mm**
	Char compressive strength	**3.6048 N/mm²**
	Design lateral strength by arching (Cl. 6.3.2)	
	Case 1 - normal loading	**380.19 kN/m²**
	Case 2 - abnormal loading	**380.19 kN/m²**
	Case 3 - protected member	**760.39 kN/m²**

Location: Wall on grid line A/1-2

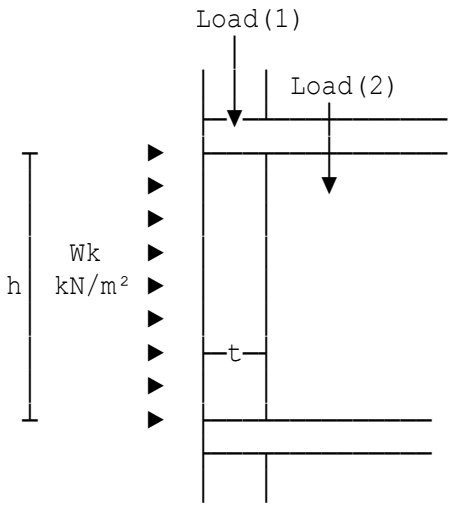

Lateral resistance of vertically loaded single leaf wall by arching

This Calculation is in accordance with EC6 - Design of masonry structures Part 1-1: General rules for reinforced and unreinforced masonry structures.

The form of this calculation is in accordance with section 6 of the code of practice.

Wk = design lateral strength

Clear height of wall	h=2 m
Thickness of wall	t=100 mm
Length of wall panel	L=3.5 m
Support restraint factor	rf=0.75
Mortar designation to Table NA.2	mortar=4
Masonry type (1=clay 2=cal silicate 3=conc brick 4=block)	typ(1)=4
Compressive strength of units	po=10.4 N/mm²
Constant K from NA Table NA.4	K(1)=0.75
Normalised mean comp strength	fbn(1)=10.4 N/mm²
Partial safety factor (material)	gamM=3
Permanent Load(1)	Gk(1)=20 kN/m
Variable Load(1)	Qk(1)=10 kN/m
Permanent Load(2)	Gk(2)=8 kN/m
Variable Load(2)	Qk(2)=5 kN/m
Ecc. of floor load on inner leaf	ecc(2)=16.667 mm
Perm actions (upper levels)	gamG1=1.35
Perm actions (floor)	gamG2=1.35
Variable actions (vertical load)	gamQ=1.5

Weight of wall at mid-height	Gkws=1 kN/m
horizontal loads (e.g. wind load)	ehe=0 mm
loads (e.g. wind load)	ehm=0 mm
Design moment at mid-height	Mmd=0.1871 kNm/m

Leading variable load factor Ψ1 psi1=0.5
Other variable load factor Ψ2 psi2=0.3

DESIGN SUMMARY	**Wall height**	**2 m**
	Wall length	**3.5 m**
	Wall thickness	**100 mm**
	Char compressive strength	**4.7566 N/mm²**
	Design lateral strength by arching (Cl. 6.3.2)	
	Case 1 - normal loading	**3.9638 kN/m²**
	Case 2 - abnormal loading	**3.9638 kN/m²**

Location: Column on grid line A/1

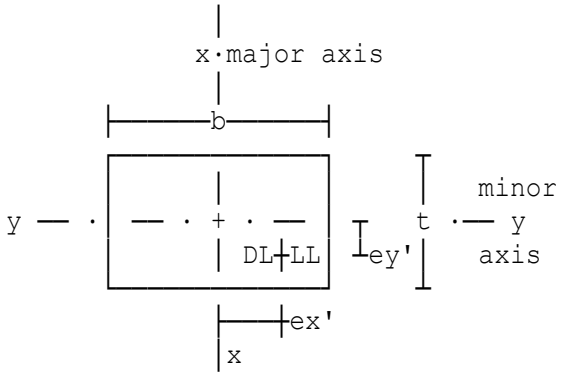

Masonry column constructed with bricks or blocks

Design column in accordance with BS5628-1:2005 the Code of practice for use of masonry. Part 1 - Structural use of unreinforced masonry.

Height of col perp to major axis	hxx=2.7 m
Height of col perp to minor axis	hyy=2.7 m
Width of column	b=450 mm
Thickness of column	t=250 mm
Effective ht for major axis bend	hefxx=5.4 m
Effective ht for minor axis bend	hefyy=2.7 m
Mortar designation to Table 1	mortar=3
Masonry type (1=clay 2=cal silicate 3=conc brick 4=block)	typ(1)=1
Compressive Strength of Units	po=20 N/mm²
Partial safety factor material	gammam=2.5
Dead load at top	DL=25 kN
Live load at top	LL=60 kN
Self weight	SW=2.89 kN
Eccentricity for major axis bend	ex'=20 mm
Eccentricity for minor axis bend	ey'=20 mm

DESIGN SUMMARY	**Major axis column height**	**2.7 m**
	Minor axis column height	**2.7 m**
	Column width	**450 mm**
	Column thickness	**250 mm**
	Char comp strength	**4.3438 N/mm²**
	Slenderness ratio	**12**
	Design vertical load	**135.05 kN**
	Vertical load resistance	**174.75 kN**

Location: Column on grid line A/1-2

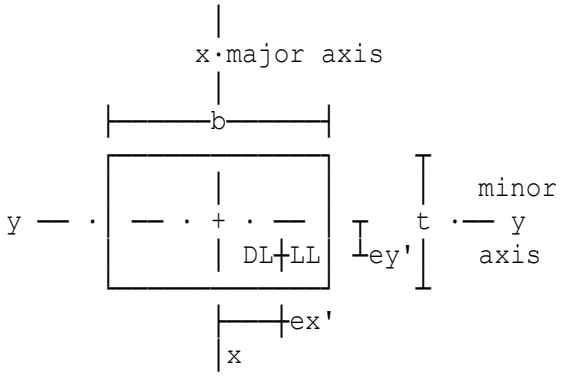

Masonry column constructed with bricks or blocks

Design column in accordance with BS5628-1:2005 the Code of practice for use of masonry. Part 1 - Structural use of unreinforced masonry.

Height of col perp to major axis	hxx=2.7 m
Height of col perp to minor axis	hyy=2.7 m
Width of column	b=350 mm
Thickness of column	t=200 mm
Effective ht for major axis bend	hefxx=2.7 m
Effective ht for minor axis bend	hefyy=2.7 m
Mortar designation to Table 1	mortar=1
Masonry type (1=clay 2=cal silicate 3=conc brick 4=block)	typ(1)=4
Height	hb=215 mm
Least horiz dimension	lhd=100 mm
Compressive Strength of Units	po=10.4 N/mm²
Partial safety factor material	gammam=2.5
Dead load at top	DL=25 kN
Live load at top	LL=60 kN
Self weight	SW=1.8 kN
Eccentricity for major axis bend	ex'=20 mm
Eccentricity for minor axis bend	ey'=20 mm

DESIGN SUMMARY	**Major axis column height**	**2.7 m**
	Minor axis column height	**2.7 m**
	Column width	**350 mm**
	Column thickness	**200 mm**
	Char comp strength	**7.084 N/mm²**
	Slenderness ratio	**13.5**
	Design vertical load	**133.52 kN**
	Vertical load resistance	**157.09 kN**

Location: Column on grid line A/1-2

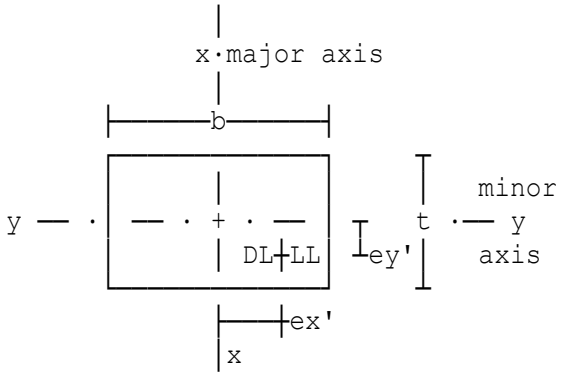

Masonry column constructed with bricks or blocks

Design column in accordance with BS5628-1:2005 the Code of practice for use of masonry. Part 1 - Structural use of unreinforced masonry.

Height of col perp to major axis	hxx=2.7 m
Height of col perp to minor axis	hyy=2.7 m
Width of column	b=450 mm
Thickness of column	t=150 mm
Effective ht for major axis bend	hefxx=5.4 m
Effective ht for minor axis bend	hefyy=2.7 m
Mortar designation to Table 1	mortar=2
Masonry type (1=clay 2=cal silicate 3=conc brick 4=block)	typ(1)=4
Height	hb=215 mm
Least horiz dimension	lhd=100 mm
Compressive Strength of Units	po=10.4 N/mm²
Partial safety factor material	gammam=3.1
Dead load at top	DL=25 kN
Live load at top	LL=25 kN
Self weight	SW=1.73 kN
Eccentricity for major axis bend	ex'=20 mm
Eccentricity for minor axis bend	ey'=20 mm

DESIGN SUMMARY	**Major axis column height**	**2.7 m**
	Minor axis column height	**2.7 m**
	Column width	**450 mm**
	Column thickness	**150 mm**
	Char comp strength	**6.7305 N/mm²**
	Slenderness ratio	**18**
	Design vertical load	**77.422 kN**
	Vertical load resistance	**96.235 kN**

Location: Column on grid line A/1-2

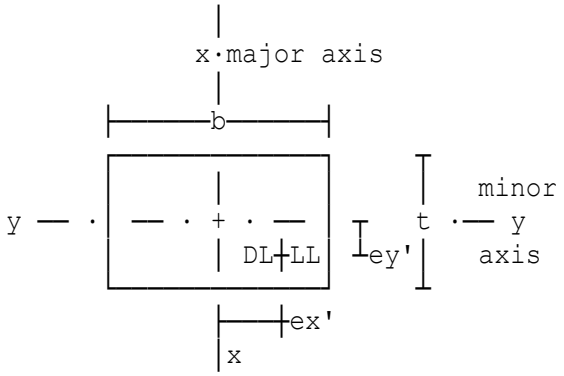

Masonry column constructed with bricks or blocks

Design column in accordance with BS5628-1:2005 the Code of practice for use of masonry. Part 1 - Structural use of unreinforced masonry.

Height of col perp to major axis	hxx=12 m
Height of col perp to minor axis	hyy=12 m
Width of column	b=600 mm
Thickness of column	t=600 mm
Effective ht for major axis bend	hefxx=12 m
Effective ht for minor axis bend	hefyy=12 m
Mortar designation to Table 1	mortar=3
Masonry type (1=clay 2=cal silicate 3=conc brick 4=block)	typ(1)=4
Height	hb=215 mm
Least horiz dimension	lhd=100 mm
Compressive Strength of Units	po=60 N/mm²
Partial safety factor material	gammam=3.1
Dead load at top	DL=600 kN
Live load at top	LL=200 kN
Self weight	SW=19.24 kN
Eccentricity for major axis bend	ex'=20 mm
Eccentricity for minor axis bend	ey'=20 mm

DESIGN SUMMARY	**Major axis column height**	**12 m**
	Minor axis column height	**12 m**
	Column width	**600 mm**
	Column thickness	**600 mm**
	Char comp strength	**16.8 N/mm²**
	Slenderness ratio	**20**
	Design vertical load	**1186.9 kN**
	Vertical load resistance	**1365.7 kN**

Location: Column on grid line A/1-2

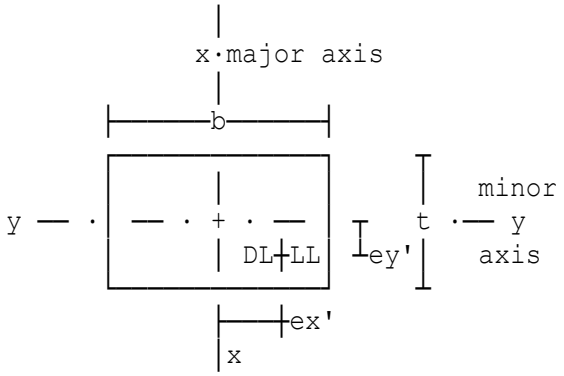

Masonry column constructed with bricks or blocks

Design column in accordance with BS5628-1:2005 the Code of practice for use of masonry. Part 1 - Structural use of unreinforced masonry.

Height of col perp to major axis	hxx=1.8 m
Height of col perp to minor axis	hyy=1.8 m
Width of column	b=300 mm
Thickness of column	t=100 mm
Effective ht for major axis bend	hefxx=3.6 m
Effective ht for minor axis bend	hefyy=1.8 m
Mortar designation to Table 1	mortar=4
Masonry type (1=clay 2=cal silicate 3=conc brick 4=block)	typ(1)=4
Height	hb=215 mm
Least horiz dimension	lhd=100 mm
Compressive Strength of Units	po=17.5 N/mm²
Partial safety factor material	gammam=3.1
Dead load at top	DL=5 kN
Live load at top	LL=10 kN
Self weight	SW=0.5 kN
Eccentricity for major axis bend	ex'=20 mm
Eccentricity for minor axis bend	ey'=20 mm

DESIGN SUMMARY	**Major axis column height**	**1.8 m**
	Minor axis column height	**1.8 m**
	Column width	**300 mm**
	Column thickness	**100 mm**
	Char comp strength	**6.7795 N/mm²**
	Slenderness ratio	**18**
	Design vertical load	**23.7 kN**
	Vertical load resistance	**34.676 kN**

Location: Column on grid line A/1

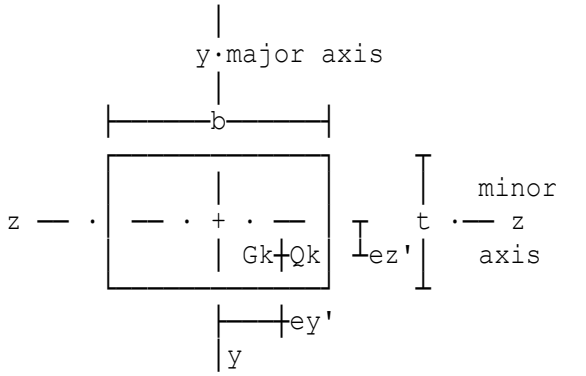

Masonry column constructed with bricks or blocks

Design column in accordance with EC6 - Design of masonry structures Part 1-1: General rules for reinforced and unreinforced masonry.

Column dimensions

Height of col perp to major axis	hyy=2.7 m
Height of col perp to minor axis	hzz=2.7 m
Width of column	b=450 mm
Thickness of column	t=250 mm
Effective ht for major axis bend	hefyy=5.4 m
Effective ht for minor axis bend	hefzz=2.7 m

Masonry details

Mortar designation to Table 1	mortar=3
Masonry type (1=clay 2=cal silicate 3=conc brick 4=block)	typ(1)=1
Compressive strength of units	po=20 N/mm²
Constant K from NA Table NA.4	K(1)=0.5
Height of masonry unit	hu=65 mm
Least horiz. dimension of units	lhd=100 mm
Partial safety factor material	gamM=2.3

Load factors

Permanent actions	gamG=1.35
Variable actions (vertical load)	gamQ=1.5

Characteristic loads

Permanent load at top	Gk=25 kN
Variable load at top	Qk=60 kN
Column self weight	Gksw=2.89 kN
Eccentricity for major axis bend	ey'=20 mm
Eccentricity for minor axis bend	ez'=25 mm

Design load resistance

Eccentricity at the top or bottom of the column resulting from horizontal loads (e.g. wind load) ehe=0 mm
Design moment at mid-height Mmd=1.9148 kNm
Eccentricity at mid-height of the column resulting from horizontal loads (e.g. wind load) ehm=0 mm

DESIGN SUMMARY	**Major axis column height**	**2.7 m**
	Minor axis column height	**2.7 m**
	Column width	**450 mm**
	Column thickness (depth)	**250 mm**
	Char comp strength	**5.5068 N/mm²**
	Slenderness ratio	**12**
	Design vertical load	**127.65 kN**
	Vertical load resistance	**197.51 kN**

Location: Column on grid line A/1-2

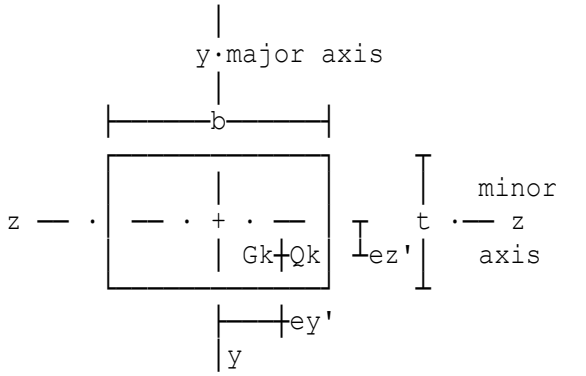

Masonry column constructed with bricks or blocks

Design column in accordance with EC6 - Design of masonry structures Part 1-1: General rules for reinforced and unreinforced masonry.

Column dimensions

Height of col perp to major axis	hyy=2.7 m
Height of col perp to minor axis	hzz=2.7 m
Width of column	b=350 mm
Thickness of column	t=200 mm
Effective ht for major axis bend	hefyy=2.7 m
Effective ht for minor axis bend	hefzz=2.7 m

Masonry details

Mortar designation to Table 1	mortar=1
Masonry type (1=clay 2=cal silicate 3=conc brick 4=block)	typ(1)=4
Compressive strength of units	po=10.4 N/mm²
Constant K from NA Table NA.4	K(1)=0.75
Height of masonry unit	hu=215 mm
Least horiz. dimension of units	lhd=100 mm
Partial safety factor material	gamM=2.3

Load factors

Permanent actions	gamG=1.35
Variable actions (vertical load)	gamQ=1.5

Characteristic loads

Permanent load at top	Gk=25 kN
Variable load at top	Qk=60 kN
Column self weight	Gksw=1.8 kN
Eccentricity for major axis bend	ey'=20 mm
Eccentricity for minor axis bend	ez'=25 mm

Design load resistance

Eccentricity at the top or bottom of the column resulting from horizontal loads (e.g. wind load) ehe=0 mm
Design moment at mid-height Mmd=2.2892 kNm
Eccentricity at mid-height of the column resulting from horizontal loads (e.g. wind load) ehm=0 mm

DESIGN SUMMARY	**Major axis column height**	**2.7 m**
	Minor axis column height	**2.7 m**
	Column width	**350 mm**
	Column thickness (depth)	**200 mm**
	Char comp strength	**9.2832 N/mm²**
	Slenderness ratio	**13.5**
	Design vertical load	**126.18 kN**
	Vertical load resistance	**176.79 kN**

Location: Column on grid line A/1-2

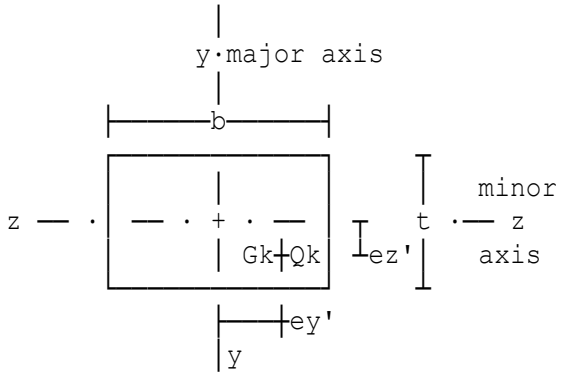

Masonry column constructed with bricks or blocks

Design column in accordance with EC6 - Design of masonry structures Part 1-1: General rules for reinforced and unreinforced masonry.

Column dimensions

Height of col perp to major axis	hyy=2.7 m
Height of col perp to minor axis	hzz=2.7 m
Width of column	b=450 mm
Thickness of column	t=150 mm
Effective ht for major axis bend	hefyy=5.4 m
Effective ht for minor axis bend	hefzz=2.7 m

Masonry details

Mortar designation to Table 1	mortar=2
Masonry type (1=clay 2=cal silicate 3=conc brick 4=block)	typ(1)=4
Compressive strength of units	po=10.4 N/mm²
Constant K from NA Table NA.4	K(1)=0.75
Height of masonry unit	hu=215 mm
Least horiz. dimension of units	lhd=100 mm
Partial safety factor material	gamM=2.7

Load factors

Permanent actions	gamG=1.35
Variable actions (vertical load)	gamQ=1.5

Characteristic loads

Permanent load at top	Gk=25 kN
Variable load at top	Qk=25 kN
Column self weight	Gksw=1.73 kN
Eccentricity for major axis bend	ey'=20 mm
Eccentricity for minor axis bend	ez'=25 mm

Design load resistance

Eccentricity at the top or bottom of the column resulting from horizontal loads (e.g. wind load) ehe=0 mm
Design moment at mid-height Mmd=1.1038 kNm
Eccentricity at mid-height of the column resulting from horizontal loads (e.g. wind load) ehm=0 mm

DESIGN SUMMARY	**Major axis column height**	**2.7 m**
	Minor axis column height	**2.7 m**
	Column width	**450 mm**
	Column thickness (depth)	**150 mm**
	Char comp strength	**7.4781 N/mm²**
	Slenderness ratio	**18**
	Design vertical load	**73.586 kN**
	Vertical load resistance	**89.954 kN**

Location: Column on grid line A/1-2

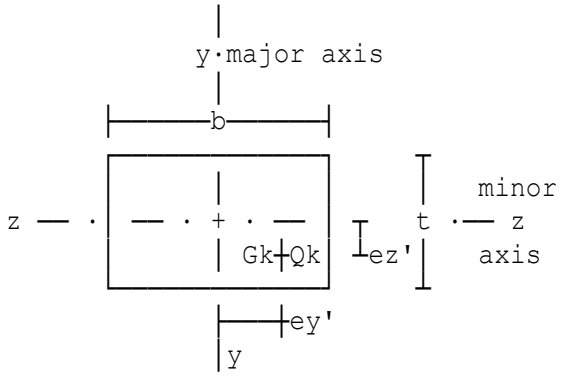

Masonry column constructed with bricks or blocks

Design column in accordance with EC6 - Design of masonry structures Part 1-1: General rules for reinforced and unreinforced masonry.

Column dimensions

Height of col perp to major axis	hyy=12 m
Height of col perp to minor axis	hzz=12 m
Width of column	b=600 mm
Thickness of column	t=600 mm
Effective ht for major axis bend	hefyy=12 m
Effective ht for minor axis bend	hefzz=12 m

Masonry details

Mortar designation to Table 1	mortar=3
Masonry type (1=clay 2=cal silicate 3=conc brick 4=block)	typ(1)=4
Compressive strength of units	po=60 N/mm²
Constant K from NA Table NA.4	K(1)=0.75
Height of masonry unit	hu=215 mm
Least horiz. dimension of units	lhd=100 mm
Partial safety factor material	gamM=2.7

Load factors

Permanent actions	gamG=1.35
Variable actions (vertical load)	gamQ=1.5

Characteristic loads

Permanent load at top	Gk=600 kN
Variable load at top	Qk=200 kN
Column self weight	Gksw=19.24 kN
Eccentricity for major axis bend	ey'=20 mm
Eccentricity for minor axis bend	ez'=25 mm

Design load resistance

Eccentricity at the top or bottom of the column resulting from horizontal loads (e.g. wind load) ehe=0 mm
Design moment at mid-height Mmd=17.04 kNm
Eccentricity at mid-height of the column resulting from horizontal loads (e.g. wind load) ehm=0 mm

DESIGN SUMMARY	**Major axis column height**	**12 m**
	Minor axis column height	**12 m**
	Column width	**600 mm**
	Column thickness (depth)	**600 mm**
	Char comp strength	**25.021 N/mm²**
	Slenderness ratio	**20**
	Design vertical load	**1136 kN**
	Vertical load resistance	**1948.8 kN**

Location: Column on grid line A/1-2

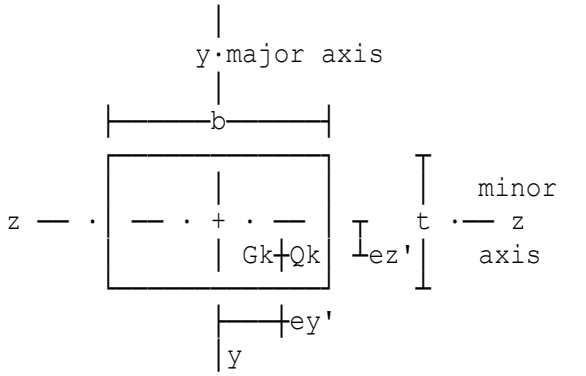

Masonry column constructed with bricks or blocks

Design column in accordance with EC6 - Design of masonry structures Part 1-1: General rules for reinforced and unreinforced masonry.

Column dimensions

Height of col perp to major axis	hyy=1.8 m
Height of col perp to minor axis	hzz=1.8 m
Width of column	b=300 mm
Thickness of column	t=100 mm
Effective ht for major axis bend	hefyy=3.6 m
Effective ht for minor axis bend	hefzz=1.8 m

Masonry details

Mortar designation to Table 1	mortar=4
Masonry type (1=clay 2=cal silicate 3=conc brick 4=block)	typ(1)=4
Compressive strength of units	po=17.5 N/mm²
Constant K from NA Table NA.4	K(1)=0.75
Height of masonry unit	hu=215 mm
Least horiz. dimension of units	lhd=100 mm
Partial safety factor material	gamM=2.7

Load factors

Permanent actions	gamG=1.35
Variable actions (vertical load)	gamQ=1.5

Characteristic loads

Permanent load at top	Gk=5 kN
Variable load at top	Qk=10 kN
Column self weight	Gksw=0.5 kN
Eccentricity for major axis bend	ey'=20 mm
Eccentricity for minor axis bend	ez'=25 mm

Design load resistance

Eccentricity at the top or bottom of the column resulting from horizontal loads (e.g. wind load) ehe=0 mm
Design moment at mid-height Mmd=0.38294 kNm
Eccentricity at mid-height of the column resulting from horizontal loads (e.g. wind load) ehm=0 mm

DESIGN SUMMARY	**Major axis column height**	**1.8 m**
	Minor axis column height	**1.8 m**
	Column width	**300 mm**
	Column thickness (depth)	**100 mm**
	Char comp strength	**6.777 N/mm²**
	Slenderness ratio	**18**
	Design vertical load	**22.425 kN**
	Vertical load resistance	**25.035 kN**

Location: Outer leaf reinforced

Panel reference E
in BS5628 Table 8

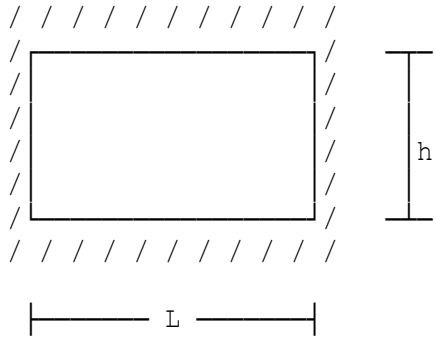

Length of wall panel	L=4.5 m
Height of wall panel	h=4.5 m
Outer leaf density	den(1)=20 kN/m³
Thickness of outer leaf	t(1)=102.5 mm
Inner leaf density	den(2)=8 kN/m³
Thickness of inner leaf	t(2)=100 mm
Mortar designation (Table 1)	mortar=3
Outer leaf (1=clay 2=calc silicate 3=conc brick 4=block)	typ(1)=1
Water absorption %age of leaf	water1=15
Compressive strength of units	po(1)=20 N/mm²
Inner leaf (1=clay 2=calc silicate 3=conc brick 4=block)	typ(2)=4
Height	hb=215 mm
Least horiz dimension	lhd2=100 mm
Compressive strength of units	po(2)=2.9 N/mm²
Partial safety factor materials	gammam=3.5
Char wind load per unit area	WL=0.6 kN/m²
Additional vert.DL on panel	w(1)=0 kN/m
Additional vert.DL on panel	w(2)=0 kN/m
Effective depth of reinforcement	d1=75 mm
Diameter (main reinforcing bars)	bard1=4 mm
Spacing of reinforcement	spacr1=150 mm
Reinforcement tensile strength	fy=485 N/mm²

DESIGN SUMMARY	**Panel length**	**4.5 m**
	Panel height	**4.5 m**
	Thickness outer leaf	**102.5 mm**
	Thickness inner leaf	**100 mm**
	Effective wall thickness	**135 mm**
	Char wind pressure	**0.6 kN/m²**
	Char wind capacity	**0.89503 kN/m²**
	Design shear on sides	**7.29 kN**
	Shear strength of sides	**119.25 kN**
	Design shear on founds	**7.29 kN**
	Shear strength of founds	**67.141 kN**
	Material safety factor	**3.5**
	Load safety factor	**1.2**

Location: Inner leaf reinforced

Panel reference E
in BS5628 Table 8

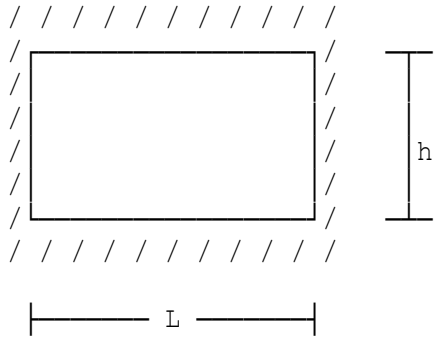

Length of wall panel	L=7.5 m
Height of wall panel	h=6 m
Outer leaf density	den(1)=20 kN/m³
Thickness of outer leaf	t(1)=102.5 mm
Inner leaf density	den(2)=10 kN/m³
Thickness of inner leaf	t(2)=140 mm
Mortar designation (Table 1)	mortar=3
Outer leaf (1=clay 2=calc silicate 3=conc brick 4=block)	typ(1)=1
Water absorption %age of leaf	water1=12
Compressive strength of units	po(1)=20 N/mm²
Inner leaf (1=clay 2=calc silicate 3=conc brick 4=block)	typ(2)=4
Height	hb=215 mm
Least horiz dimension	lhd2=140 mm
Compressive strength of units	po(2)=7.3 N/mm²
Partial safety factor materials	gammam=3.5
Char wind load per unit area	WL=0.4 kN/m²
Additional vert.DL on panel	w(1)=0 kN/m
Additional vert.DL on panel	w(2)=0 kN/m
Effective depth of reinforcement	d2=116 mm
Diameter of main reinforcing bars	bard2=5 mm
Spacing of reinforcement	spacr2=450 mm
Reinforcement tensile strength	fy=460 N/mm²

DESIGN SUMMARY	**Panel length**	**7.5 m**
	Panel height	**6 m**
	Thickness outer leaf	**102.5 mm**
	Thickness inner leaf	**140 mm**
	Effective wall thickness	**161.67 mm**
	Char wind pressure	**0.4 kN/m²**
	Char wind capacity	**0.40829 kN/m²**
	Design shear on sides	**10.8 kN**
	Shear strength of sides	**240.6 kN**
	Design shear on founds	**10.8 kN**
	Shear strength of founds	**142.66 kN**
	Material safety factor	**3.5**
	Load safety factor	**1.2**

Location: Both leaves reinforced

Panel reference A
in BS5628 Table 8

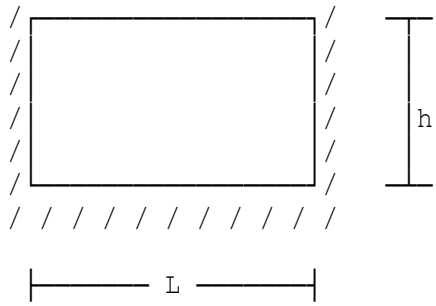

Length of wall panel	L=8 m
Height of wall panel	h=4 m
Outer leaf density	den(1)=20 kN/m³
Thickness of outer leaf	t(1)=102.5 mm
Inner leaf density	den(2)=8 kN/m³
Thickness of inner leaf	t(2)=150 mm
Mortar designation (Table 1)	mortar=3
Outer leaf (1=clay 2=calc silicate 3=conc brick 4=block)	typ(1)=1
Water absorption %age of leaf	water1=15
Compressive strength of units	po(1)=20 N/mm²
Inner leaf (1=clay 2=calc silicate 3=conc brick 4=block)	typ(2)=4
Height	hb=215 mm
Least horiz dimension	lhd2=150 mm
Compressive strength of units	po(2)=5.2 N/mm²
Partial safety factor materials	gammam=2.5
Char wind load per unit area	WL=0.35 kN/m²
Additional vert.DL on panel	w(1)=0 kN/m
Additional vert.DL on panel	w(2)=0 kN/m
Effective depth of reinforcement	d1=81 mm
Diameter (main reinforcing bars)	bard1=4 mm
Spacing of reinforcement	spacr1=225 mm
Reinforcement tensile strength	fy=485 N/mm²
Effective depth of reinforcement	d2=125 mm
Diameter of main reinforcing bars	bard2=4 mm
Spacing of reinforcement	spacr2=225 mm
Reinforcement tensile strength	fy=485 N/mm²

DESIGN SUMMARY	**Panel length**	**8 m**
	Panel height	**4 m**
	Thickness outer leaf	**102.5 mm**
	Thickness inner leaf	**150 mm**
	Effective wall thickness	**168.33 mm**
	Char wind pressure	**0.35 kN/m²**
	Char wind capacity	**0.47265 kN/m²**
	Design shear on sides	**6.72 kN**
	Shear strength of sides	**118 kN**
	Design shear on founds	**13.44 kN**
	Shear strength of founds	**143.66 kN**
	Material safety factor	**2.5**
	Load safety factor	**1.2**

Location: Unreinforced wall panel

Panel reference C
in BS5628 Table 8

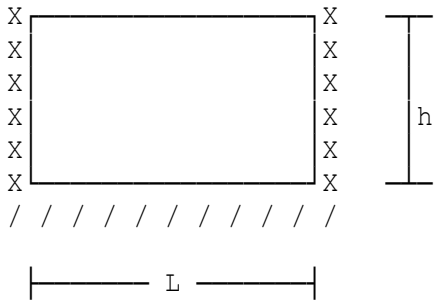

Length of wall panel	L=4 m
Height of wall panel	h=3 m
Outer leaf density	den(1)=10 kN/m³
Thickness of outer leaf	t(1)=100 mm
Inner leaf density	den(2)=10 kN/m³
Thickness of inner leaf	t(2)=100 mm
Mortar designation (Table 1)	mortar=3
Outer leaf (1=clay 2=calc silicate 3=conc brick 4=block)	typ(1)=4
Height	hb=215 mm
Least horiz.dimension	lhd1=100 mm
Compressive strength of units	po(1)=10.4 N/mm²
Inner leaf (1=clay 2=calc silicate 3=conc brick 4=block)	typ(2)=4
Height	hb=215 mm
Least horiz dimension	lhd2=100 mm
Compressive strength of units	po(2)=10.4 N/mm²
Partial safety factor materials	gammam=3.1
Char wind load per unit area	WL=0.85 kN/m²
Additional vert.DL on panel	w(1)=0 kN/m
Additional vert.DL on panel	w(2)=0 kN/m

DESIGN SUMMARY	**Panel length**	**4 m**
	Panel height	**3 m**
	Thickness outer leaf	**100 mm**
	Thickness inner leaf	**100 mm**
	Effective wall thickness	**133.33 mm**
	Char wind pressure	**0.85 kN/m²**
	Char wind capacity	**0.94991 kN/m²**
	Design shear on sides	**6.12 kN**
	Shear strength of sides	**84 kN**
	Design shear on founds	**12.24 kN**
	Shear strength of founds	**53.184 kN**
	Material safety factor	**3.1**
	Load safety factor	**1.2**

Location: Single skin wall reinforced

Panel reference E
in BS5628 Table 8

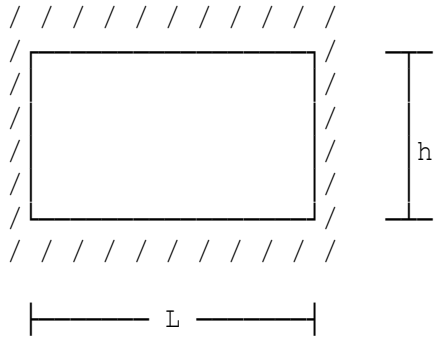

Length of wall panel	L=4.5 m
Height of wall panel	h=4.5 m
Wall density	den(1)=20 kN/m³
Wall thickness	t(1)=102.5 mm
Mortar designation (Table 1)	mortar=3
Wall type (1=clay 2=calc silicate 3=conc brick 4=block)	typ(1)=1
Water absorption %age of leaf	water1=15
Compressive strength of units	po(1)=20 N/mm²
Partial safety factor materials	gammam=3.5
Char wind load per unit area	WL=0.65 kN/m²
Additional vert.DL on panel	w(1)=5 kN/m
Effective depth of reinforcement	d1=85 mm
Diameter (main reinforcing bars)	bard1=4 mm
Spacing of reinforcement	spacr1=150 mm
Reinforcement tensile strength	fy=485 N/mm²

DESIGN SUMMARY	**Panel length**	**4.5 m**
	Panel height	**4.5 m**
	Single skin wall thickness	**102.5 mm**
	Char wind pressure	**0.65 kN/m²**
	Char wind capacity	**0.84451 kN/m²**
	Design shear on sides	**7.8975 kN**
	Shear strength of sides	**92.25 kN**
	Design shear on founds	**7.8975 kN**
	Shear strength of founds	**41.502 kN**
	Material safety factor	**3.5**
	Load safety factor	**1.2**

Location: Single skin wall reinforced

Panel reference E
in BS5628 Table 8

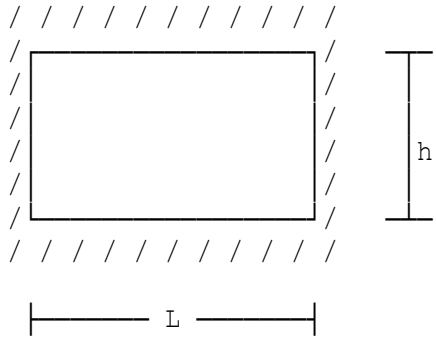

Length of wall panel	L=1.8 m
Height of wall panel	h=4.5 m
Wall density	den(1)=20 kN/m³
Wall thickness	t(1)=215 mm
Mortar designation (Table 1)	mortar=3
Wall type (1=clay 2=calc silicate 3=conc brick 4=block)	typ(1)=4
Height	hb=215 mm
Least horiz.dimension	lhd1=215 mm
Compressive strength of units	po(1)=7.3 N/mm²
Partial safety factor materials	gammam=3.5
Char wind load per unit area	WL=4.5 kN/m²
Additional vert.DL on panel	w(1)=0 kN/m
Effective depth of reinforcement	d1=150 mm
Diameter (main reinforcing bars)	bard1=4.5 mm
Spacing of reinforcement	spacr1=225 mm
Reinforcement tensile strength	fy=460 N/mm²

DESIGN SUMMARY	**Panel length**	**1.8 m**
	Panel height	**4.5 m**
	Single skin wall thickness	**215 mm**
	Char wind pressure	**4.5 kN/m²**
	Char wind capacity	**6.8771 kN/m²**
	Design shear on sides	**25.515 kN**
	Shear strength of sides	**135.45 kN**
	Design shear on founds	**25.515 kN**
	Shear strength of founds	**30.743 kN**
	Material safety factor	**3.5**
	Load safety factor	**1.4**

Location: Outer leaf reinforced

Panel reference E
in EC6 Annex E

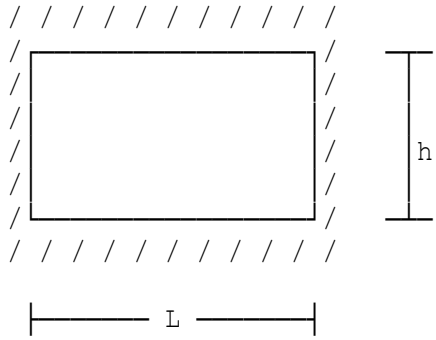

Length of wall panel	L=4.5 m
Height of wall panel	h=4.5 m
Outer leaf density	den(1)=20 kN/m³
Thickness of outer leaf	t(1)=102.5 mm
Inner leaf density	den(2)=8 kN/m³
Thickness of inner leaf	t(2)=100 mm
Mortar designation to Table NA.2	mortar=3
Outer leaf (1=clay 2=calc silicate 3=conc brick 4=block)	typ(1)=1
Water absorption %age of leaf	water1=15
Compressive strength of units	po(1)=20 N/mm²
Constant K from NA Table NA.4	K(1)=0.5
Height of masonry unit	hu(1)=65 mm
Least horiz. dimension of units	lhd(1)=100 mm
Inner leaf (1=clay 2=calc silicate 3=conc brick 4=block)	typ(2)=4
Compressive strength of units	po(2)=2.9 N/mm²
Constant K from NA Table NA.4	K(2)=0.75
Height of masonry unit	hu(2)=215 mm
Least horiz. dimension of units	lhd(2)=100 mm
Partial safety factor (material)	gamM=2.4
Charact wind load per unit area	Qkw=0.6 kN/m²
Additional vert.DL on panel	Gk(1)=0 kN/m
Height of outer leaf units	hu(1)=65 mm
Additional vert.DL on panel	Gk(2)=0 kN/m
Height of inner leaf units	hu(2)=215 mm
Effective depth of reinforcement	d1=75 mm
Diameter main reinforcing bars	bard1=4 mm
Spacing of reinforcement	spacr1=150 mm
Reinforcement tensile strength	fy=485 N/mm²

DESIGN SUMMARY	**Panel length**	**4.5 m**
	Panel height	**4.5 m**
	Thickness outer leaf	**102.5 mm**
	Thickness inner leaf	**100 mm**
	Effective wall thickness	**127.52 mm**
	Char wind pressure	**0.6 kN/m²**
	Char wind capacity	**0.81519 kN/m²**
	Design shear on sides	**9.1125 kN**
	Shear strength of sides	**72.9 kN**
	Design shear on founds	**9.1125 kN**
	Shear strength of founds	**81.211 kN**
	Material safety factor	**2.4**
	Load safety factor	**1.5**

Outer leaf - use Group 1 units (i.e. solid)
Inner leaf - use Group 1 units (i.e. solid)

Location: Inner leaf reinforced

Panel reference E
in EC6 Annex E

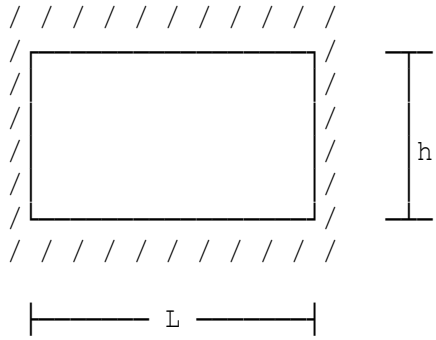

Length of wall panel	L=7.5 m
Height of wall panel	h=6 m
Outer leaf density	den(1)=20 kN/m³
Thickness of outer leaf	t(1)=102.5 mm
Inner leaf density	den(2)=10 kN/m³
Thickness of inner leaf	t(2)=140 mm
Mortar designation to Table NA.2	mortar=3
Outer leaf (1=clay 2=calc silicate 3=conc brick 4=block)	typ(1)=1
Water absorption %age of leaf	water1=12
Compressive strength of units	po(1)=20 N/mm²
Constant K from NA Table NA.4	K(1)=0.5
Height of masonry unit	hu(1)=65 mm
Least horiz. dimension of units	lhd(1)=100 mm
Inner leaf (1=clay 2=calc silicate 3=conc brick 4=block)	typ(2)=4
Compressive strength of units	po(2)=7.3 N/mm²
Constant K from NA Table NA.4	K(2)=0.55
Height of masonry unit	hu(2)=215 mm
Least horiz. dimension of units	lhd(2)=140 mm
Partial safety factor (material)	gamM=2
Charact wind load per unit area	Qkw=0.4 kN/m²
Additional vert.DL on panel	Gk(1)=0 kN/m
Height of outer leaf units	hu(1)=65 mm
Additional vert.DL on panel	Gk(2)=0 kN/m
Height of inner leaf units	hu(2)=215 mm

DESIGN SUMMARY	**Panel length**	**7.5 m**
	Panel height	**6 m**
	Thickness outer leaf	**102.5 mm**
	Thickness inner leaf	**140 mm**
	Effective wall thickness	**156.26 mm**
	Char wind pressure	**0.4 kN/m²**
	Char wind capacity	**0.46072 kN/m²**
	Design shear on sides	**13.5 kN**
	Shear strength of sides	**116.4 kN**
	Design shear on founds	**13.5 kN**
	Shear strength of founds	**167.86 kN**
	Material safety factor	**2**
	Load safety factor	**1.5**

Outer leaf - use Group 1 units (i.e. solid)
Inner leaf - use Group 1 units (i.e. solid)

Location: Both leaves reinforced

Panel reference A
in EC6 Annex E

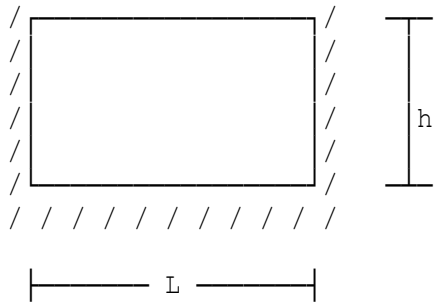

Length of wall panel	L=8 m
Height of wall panel	h=4 m
Outer leaf density	den(1)=20 kN/m³
Thickness of outer leaf	t(1)=102.5 mm
Inner leaf density	den(2)=8 kN/m³
Thickness of inner leaf	t(2)=150 mm
Mortar designation to Table NA.2	mortar=3
Outer leaf (1=clay 2=calc silicate 3=conc brick 4=block)	typ(1)=1
Water absorption %age of leaf	water1=15
Compressive strength of units	po(1)=20 N/mm²
Constant K from NA Table NA.4	K(1)=0.5
Normalised mean comp strength	fbn(1)=17 N/mm²
Inner leaf (1=clay 2=calc silicate 3=conc brick 4=block)	typ(2)=4
Compressive strength of units	po(2)=5.2 N/mm²
Constant K from NA Table NA.4	K(2)=0.75
Normalised mean comp strength	fbn(2)=5.2 N/mm²
Partial safety factor (material)	gamM=2
Charact wind load per unit area	Qkw=0.35 kN/m²
Additional vert.DL on panel	Gk(1)=0 kN/m
Height of outer leaf units	hu(1)=65 mm
Additional vert.DL on panel	Gk(2)=0 kN/m
Height of inner leaf units	hu(2)=215 mm

Effective depth of reinforcement	d1=81 mm
Diameter main reinforcing bars	bard1=4 mm
Spacing of reinforcement	spacr1=225 mm
Reinforcement tensile strength	fy=485 N/mm²
Effective depth of reinforcement	d2=125 mm
Diameter main reinforcing bars	bard2=4 mm
Spacing of reinforcement	spacr2=225 mm
Reinforcement tensile strength	fy=485 N/mm²

DESIGN SUMMARY	**Panel length**	**8 m**
	Panel height	**4 m**
	Thickness outer leaf	**102.5 mm**
	Thickness inner leaf	**150 mm**
	Effective wall thickness	**164.42 mm**
	Char wind pressure	**0.35 kN/m²**
	Char wind capacity	**0.38294 kN/m²**
	Design shear on sides	**8.4 kN**
	Shear strength of sides	**80.8 kN**
	Design shear on founds	**16.8 kN**
	Shear strength of founds	**176.58 kN**
	Material safety factor	**2**
	Load safety factor	**1.5**

Outer leaf - use Group 1 units (i.e. solid)
Inner leaf - use Group 1 units (i.e. solid)

Location: Unreinforced wall panel

Panel reference C
in EC6 Annex E

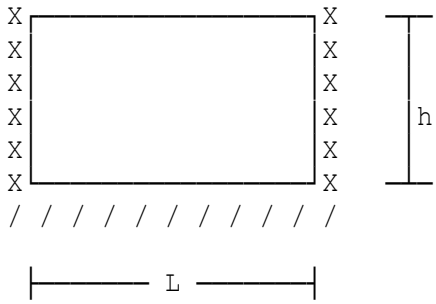

Length of wall panel	L=4 m
Height of wall panel	h=3 m
Outer leaf density	den(1)=10 kN/m³
Thickness of outer leaf	t(1)=100 mm
Inner leaf density	den(2)=10 kN/m³
Thickness of inner leaf	t(2)=100 mm
Mortar designation to Table NA.2	mortar=3
Outer leaf (1=clay 2=calc silicate 3=conc brick 4=block)	typ(1)=4
Compressive strength of units	po(1)=10.4 N/mm²
Constant K from NA Table NA.4	K(1)=0.75
Normalised mean comp strength	fbn(1)=10.4 N/mm²
Inner leaf (1=clay 2=calc silicate 3=conc brick 4=block)	typ(2)=4
Compressive strength of units	po(2)=10.4 N/mm²
Constant K from NA Table NA.4	K(2)=0.75
Normalised mean comp strength	fbn(2)=10.4 N/mm²
Partial safety factor (material)	gamM=2.4
Charact wind load per unit area	Qkw=0.85 kN/m²
Additional vert.DL on panel	Gk(1)=0 kN/m
Height of outer leaf units	hu(1)=215 mm
Additional vert.DL on panel	Gk(2)=0 kN/m
Height of inner leaf units	hu(2)=215 mm

DESIGN SUMMARY	**Panel length**	**4 m**
	Panel height	**3 m**
	Thickness outer leaf	**100 mm**
	Thickness inner leaf	**100 mm**
	Effective wall thickness	**125.93 mm**
	Char wind pressure	**0.85 kN/m²**
	Char wind capacity	**0.97602 kN/m²**
	Design shear on sides	**7.65 kN**
	Shear strength of sides	**36 kN**
	Design shear on founds	**15.3 kN**
	Shear strength of founds	**51.456 kN**
	Material safety factor	**2.4**
	Load safety factor	**1.5**

Outer leaf - use Group 1 units (i.e. solid)
Inner leaf - use Group 1 units (i.e. solid)

Location: Single skin wall reinforced

Panel reference E
in EC6 Annex E

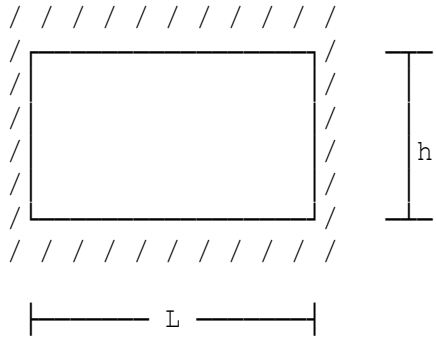

Length of wall panel	L=4.5 m
Height of wall panel	h=4.5 m
Wall density	den(1)=20 kN/m³
Wall thickness	t(1)=102.5 mm
Mortar designation to Table NA.2	mortar=3
Wall type (1=clay 2=calc silicate 3=conc brick 4=block)	typ(1)=1
Water absorption %age of leaf	water1=15
Compressive strength of units	po(1)=20 N/mm²
Constant K from NA Table NA.4	K(1)=0.5
Height of masonry unit	hu(1)=65 mm
Least horiz. dimension of units	lhd(1)=100 mm
Partial safety factor (material)	gamM=2.4
Charact wind load per unit area	Qkw=0.65 kN/m²
Additional vert.DL on panel	Gk(1)=5 kN/m
Height of the units	hu(1)=65 mm
Effective depth of reinforcement	d1=85 mm
Diameter main reinforcing bars	bard1=4 mm
Spacing of reinforcement	spacr1=150 mm
Reinforcement tensile strength	fy=485 N/mm²

DESIGN SUMMARY	**Panel length**	**4.5 m**
	Panel height	**4.5 m**
	Single skin wall thickness	**102.5 mm**
	Char wind pressure	**0.65 kN/m²**
	Char wind capacity	**0.71899 kN/m²**
	Design shear on sides	**9.8719 kN**
	Shear strength of sides	**36.9 kN**
	Design shear on founds	**9.8719 kN**
	Shear strength of founds	**46.118 kN**
	Material safety factor	**2.4**
	Load safety factor	**1.5**

Outer leaf - use Group 1 units (i.e. solid)

Location: Single skin wall reinforced

Panel reference E
in EC6 Annex E

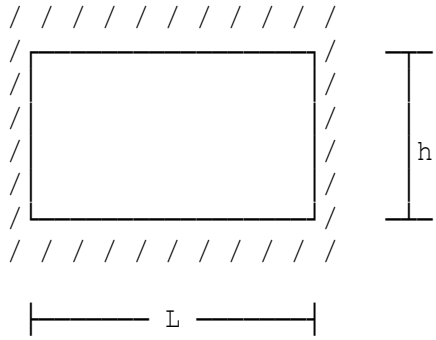

Length of wall panel	L=1.8 m
Height of wall panel	h=4.5 m
Wall density	den(1)=20 kN/m³
Wall thickness	t(1)=215 mm
Mortar designation to Table NA.2	mortar=3
Wall type (1=clay 2=calc silicate 3=conc brick 4=block)	typ(1)=4
Compressive strength of units	po(1)=7.3 N/mm²
Constant K from NA Table NA.4	K(1)=0.75
Normalised mean comp strength	fbn(1)=7.3 N/mm²
Partial safety factor (material)	gamM=2.7
Charact wind load per unit area	Qkw=4.5 kN/m²
Additional vert.DL on panel	Gk(1)=0 kN/m
Height of the units	hu(1)=215 mm
Effective depth of reinforcement	d1=150 mm
Diameter main reinforcing bars	bard1=4.5 mm
Spacing of reinforcement	spacr1=225 mm
Reinforcement tensile strength	fy=460 N/mm²

DESIGN SUMMARY	**Panel length**	**1.8 m**
	Panel height	**4.5 m**
	Single skin wall thickness	**215 mm**
	Char wind pressure	**4.5 kN/m²**
	Char wind capacity	**6.5895 kN/m²**
	Design shear on sides	**27.337 kN**
	Shear strength of sides	**58.05 kN**
	Design shear on founds	**27.337 kN**
	Shear strength of founds	**28.236 kN**
	Material safety factor	**2.7**
	Load safety factor	**1.5**

Outer leaf - use Group 1 units (i.e. solid)

Location: Wall on grid line A/1-2

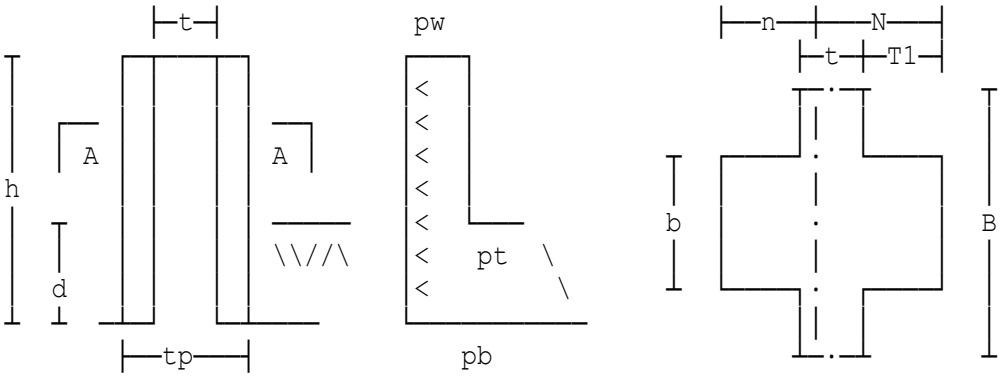

Elevation **Pressure diagram** **SECTION A-A**

Clear height of wall	h=1.7 m
Depth of soil	d=0 m
Thickness of wall	t=150 mm
Overall thickness of wall	tp=450 mm
Offset of pier	T1=0 mm
Width of pier	b=200 mm
Spacing of piers (width of wall)	B=2 m
Partial safety factor materials	gammam=2.5
Mortar designation to Table 1	mortar=2
Masonry density	den(1)=15 kN/m³
	typ(1)=1
Water absorption %age of leaf	water=7
Soil density	sdens=18 kN/m³
Soil angle of internal friction	theta'=30°
Surcharge pressure	surch=0 kN/m²
Wind pressure	WL=0.4 kN/m²

DESIGN SUMMARY	**Wall height**	**1.7 m**
	Wall thickness	**150 mm**
	Effective thickness	**210 mm**
	Section modulus	**0.0105 m³**
	Characteristic flex strength	**0.4 N/mm²**
	Design bending moment	**1.3872 kNm**
	Bending moment resistance	**1.921 kNm**
	Design shear	**1.632 kN**
	Ultimate shear resistance	**52.383 kN**

Location: Wall on grid line A/1-2

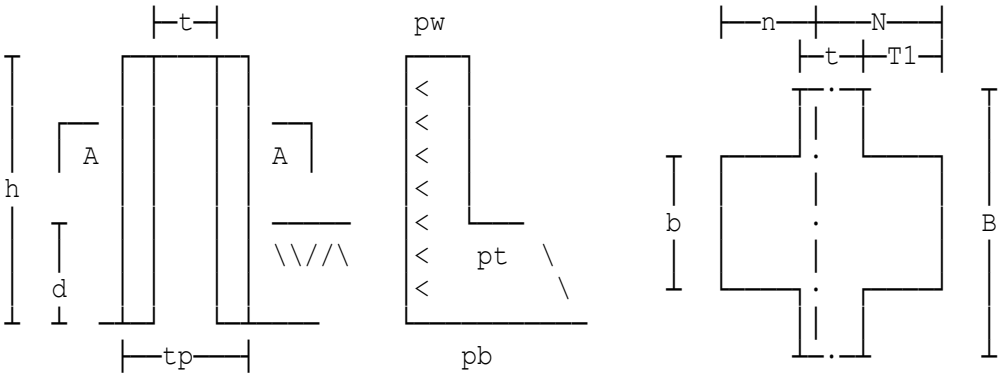

Elevation **Pressure diagram** **SECTION A-A**

Clear height of wall	h=0.8 m
Depth of soil	d=0 m
Thickness of wall	t=400 mm
Overall thickness of wall	tp=450 mm
Offset of pier	T1=0 mm
Width of pier	b=200 mm
Spacing of piers (width of wall)	B=2 m
Partial safety factor materials	gammam=3.1
Mortar designation to Table 1	mortar=1
Masonry density	den(1)=15 kN/m³
	typ(1)=4
Compressive strength	po=10.4 N/mm²
Soil density	sdens=18 kN/m³
Soil angle of internal friction	theta'=30°
Surcharge pressure	surch=0 kN/m²
Wind pressure	WL=0.4 kN/m²

DESIGN	**Wall height**	**0.8 m**
SUMMARY	**Wall thickness**	**400 mm**
	Effective thickness	**410 mm**
	Section modulus	**0.057978 m³**
	Characteristic flex strength	**0.25 N/mm²**
	Design bending moment	**0.39936 kNm**
	Bending moment resistance	**5.3018 kNm**
	Design shear	**0.9984 kN**
	Ultimate shear resistance	**149.72 kN**

Location: Wall on grid line A/1-2

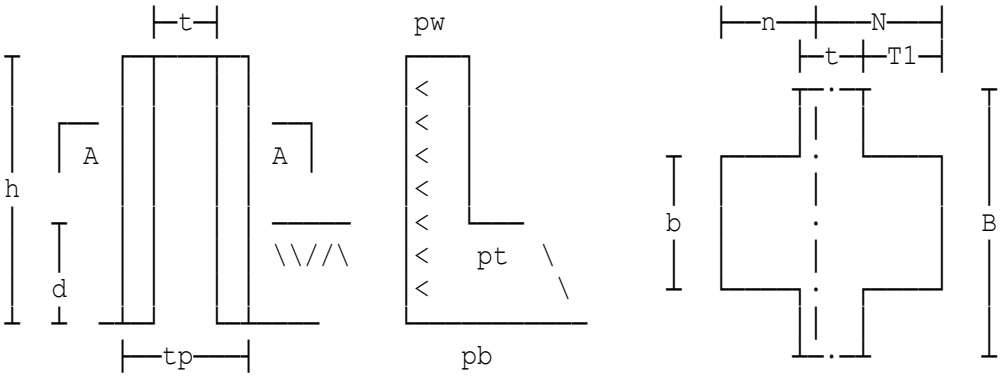

Elevation **Pressure diagram** **SECTION A-A**

Clear height of wall	h=2.4 m
Depth of soil	d=0.3 m
Thickness of wall	t=150 mm
Overall thickness of wall	tp=450 mm
Offset of pier	T1=0 mm
Width of pier	b=200 mm
Spacing of piers (width of wall)	B=2 m
Partial safety factor materials	gammam=3.1
Mortar designation to Table 1	mortar=2
Masonry density	den(1)=15 kN/m³
	typ(1)=4
Compressive strength	po=60 N/mm²
Soil density	sdens=18 kN/m³
Soil angle of internal friction	theta'=30°
Surcharge pressure	surch=0 kN/m²
Wind pressure	WL=0.05 kN/m²

DESIGN SUMMARY	**Wall height**	**2.4 m**
	Wall thickness	**150 mm**
	Effective thickness	**210 mm**
	Section modulus	**0.0098654 m³**
	Characteristic flex strength	**0.25 N/mm²**
	Design bending moment	**0.4374 kNm**
	Bending moment resistance	**1.1152 kNm**
	Design shear	**1.224 kN**
	Ultimate shear resistance	**39.9 kN**

Location: Wall on grid line A/1-2

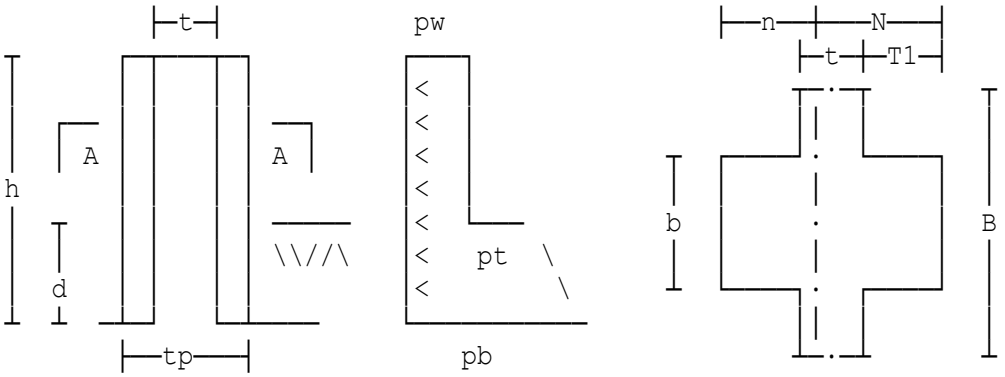

Elevation **Pressure diagram** **SECTION A-A**

Clear height of wall	h=1.8 m
Depth of soil	d=0 m
Thickness of wall	t=450 mm
Overall thickness of wall	tp=450 mm
Partial safety factor materials	gammam=3.1
Mortar designation to Table 1	mortar=3
Masonry density	den(1)=15 kN/m³
	typ(1)=4
Compressive strength	po=10.4 N/mm²
Soil density	sdens=18 kN/m³
Soil angle of internal friction	theta'=30°
Surcharge pressure	surch=0 kN/m²
Wind pressure	WL=0.4 kN/m²

DESIGN	**Wall height**	**1.8 m**
SUMMARY	**Wall thickness**	**450 mm**
	Section modulus	**0.03375 m³**
	Characteristic flex strength	**0.25 N/mm²**
	Design bending moment	**0.7776 kNm**
	Bending moment resistance	**3.5419 kNm**
	Design shear	**0.864 kN**
	Ultimate shear resistance	**29.624 kN**

Location: Wall on grid line A/1-2

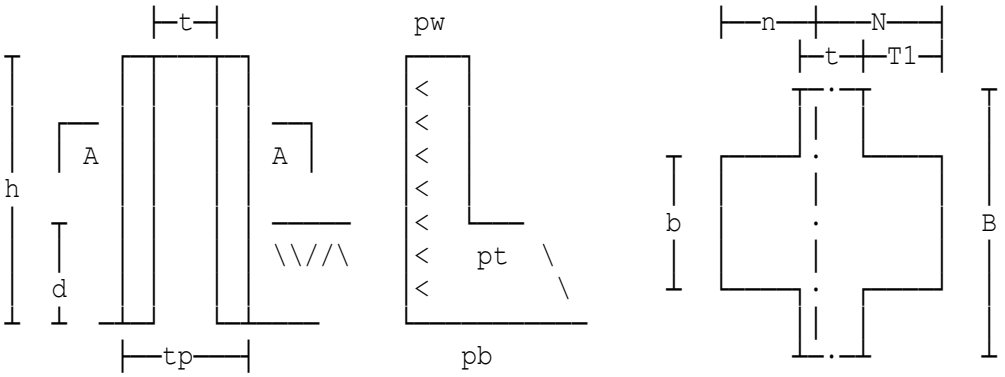

Elevation **Pressure diagram** **SECTION A-A**

Clear height of wall	h=1.1 m
Depth of soil	d=0 m
Thickness of wall	t=100 mm
Overall thickness of wall	tp=450 mm
Offset of pier	T1=0 mm
Width of pier	b=200 mm
Spacing of piers (width of wall)	B=2 m
Partial safety factor materials	gammam=3.1
Mortar designation to Table 1	mortar=4
Masonry density	den(1)=15 kN/m³
	typ(1)=4
Compressive strength	po=10.4 N/mm²
Soil density	sdens=18 kN/m³
Soil angle of internal friction	theta'=30°
Surcharge pressure	surch=0 kN/m²
Wind pressure	WL=0.4 kN/m²

DESIGN SUMMARY	**Wall height**	**1.1 m**
	Wall thickness	**100 mm**
	Effective thickness	**140 mm**
	Section modulus	**0.0098269 m³**
	Characteristic flex strength	**0.2 N/mm²**
	Design bending moment	**0.5808 kNm**
	Bending moment resistance	**0.77992 kNm**
	Design shear	**1.056 kN**
	Ultimate shear resistance	**13.348 kN**

Location: Wall on grid line A/1-2

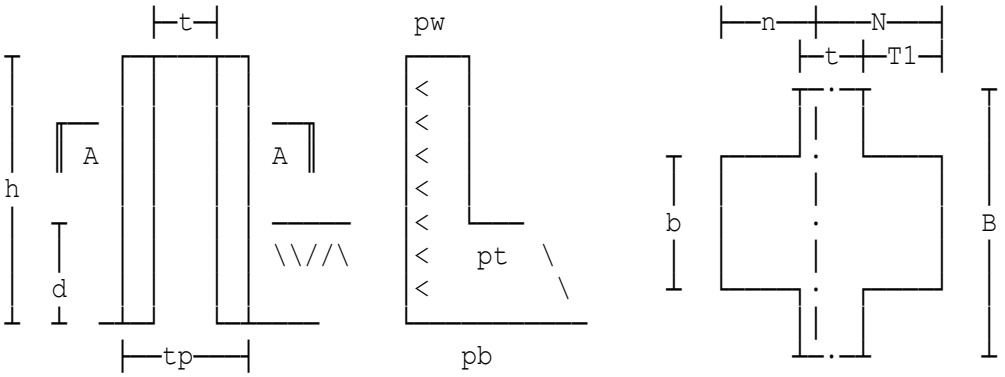

Elevation **Pressure diagram** **SECTION A-A**

Clear height of wall	h=1.7 m
Depth of soil	d=0 m
Thickness of wall	t=150 mm
Overall thickness of wall	tp=450 mm
Offset of pier	T1=0 mm
Width of pier	b=200 mm
Spacing of piers (width of wall)	B=2 m
Partial safety factor (material)	gamM=2
Mortar designation to Table NA.2	mortar=2
Masonry density	den(1)=15 kN/m³
	typ(1)=1
Water absorption %age of leaf	water=7
Compressive strength of units	po=10.4 N/mm²
Soil density	sdens=18 kN/m³
Soil angle of internal friction	theta'=30°
Surcharge pressure	surch=0 kN/m²
Wind pressure	Wk=0.4 kN/m²

DESIGN SUMMARY	**Wall height**	**1.7 m**
	Wall thickness	**150 mm**
	Effective thickness	**210 mm**
	Section modulus	**0.0091431 m³**
	Characteristic flex strength	**0.4 N/mm²**
	Design bending moment	**1.734 kNm**
	Bending moment resistance	**2.0384 kNm**
	Design shear	**2.04 kN**
	Design shear resistance	**16.065 kN**

Location: Wall on grid line A/1-2

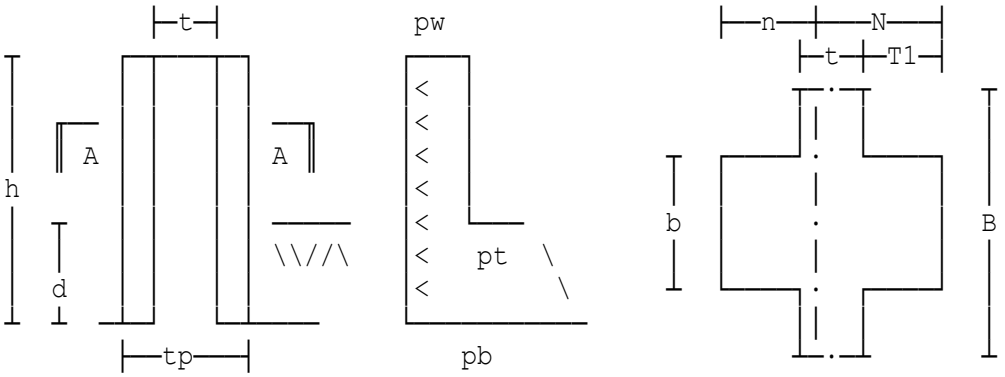

Elevation **Pressure diagram** **SECTION A-A**

Clear height of wall	h=0.8 m
Depth of soil	d=0 m
Thickness of wall	t=400 mm
Overall thickness of wall	tp=450 mm
Offset of pier	T1=0 mm
Width of pier	b=200 mm
Spacing of piers (width of wall)	B=2 m
Partial safety factor (material)	gamM=2.4
Mortar designation to Table NA.2	mortar=1
Masonry density	den(1)=15 kN/m³
	typ(1)=4
Compressive strength of units	po=10.4 N/mm²
Soil density	sdens=18 kN/m³
Soil angle of internal friction	theta'=30°
Surcharge pressure	surch=0 kN/m²
Wind pressure	Wk=0.4 kN/m²

DESIGN	**Wall height**	**0.8 m**
SUMMARY	**Wall thickness**	**400 mm**
	Effective thickness	**410 mm**
	Section modulus	**0.010177 m³**
	Characteristic flex strength	**0.25 N/mm²**
	Design bending moment	**0.06912 kNm**
	Bending moment resistance	**1.17 kNm**
	Design shear	**0.1728 kN**
	Design shear resistance	**12.586 kN**

Location: Wall on grid line A/1-2

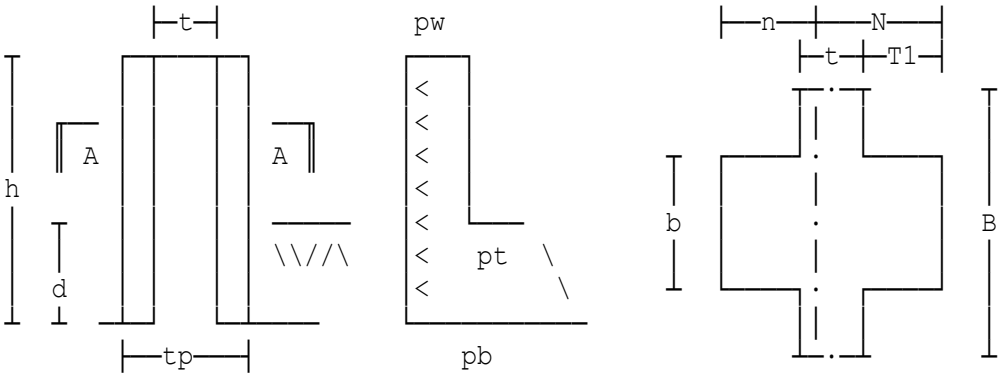

Elevation **Pressure diagram** **SECTION A-A**

Clear height of wall	h=2.4 m
Depth of soil	d=0.3 m
Thickness of wall	t=150 mm
Overall thickness of wall	tp=450 mm
Offset of pier	T1=0 mm
Width of pier	b=200 mm
Spacing of piers (width of wall)	B=2 m
Partial safety factor (material)	gamM=2.4
Mortar designation to Table NA.2	mortar=2
Masonry density	den(1)=15 kN/m³
	typ(1)=4
Compressive strength of units	po=60 N/mm²
Soil density	sdens=18 kN/m³
Soil angle of internal friction	theta'=30°
Surcharge pressure	surch=0 kN/m²
Wind pressure	Wk=0.05 kN/m²

DESIGN SUMMARY	**Wall height**	**2.4 m**
	Wall thickness	**150 mm**
	Effective thickness	**210 mm**
	Section modulus	**0.0095645 m³**
	Characteristic flex strength	**0.25 N/mm²**
	Design bending moment	**0.54675 kNm**
	Bending moment resistance	**1.3062 kNm**
	Design shear	**1.53 kN**
	Design shear resistance	**15.253 kN**

Location: Wall on grid line A/1-2

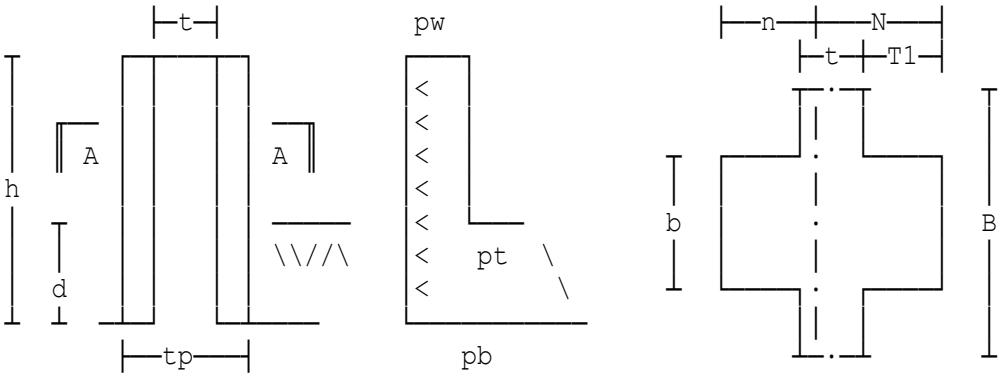

Elevation **Pressure diagram** **SECTION A-A**

Clear height of wall	h=1.8 m
Depth of soil	d=0 m
Thickness of wall	t=450 mm
Overall thickness of wall	tp=450 mm
Partial safety factor (material)	gamM=2.4
Mortar designation to Table NA.2	mortar=3
Masonry density	den(1)=15 kN/m³
	typ(1)=4
Compressive strength of units	po=10.4 N/mm²
Soil density	sdens=18 kN/m³
Soil angle of internal friction	theta'=30°
Surcharge pressure	surch=0 kN/m²
Wind pressure	Wk=0.4 kN/m²

DESIGN	**Wall height**	**1.8 m**
SUMMARY	**Wall thickness**	**450 mm**
	Section modulus	**0.03375 m³**
	Characteristic flex strength	**0.25 N/mm²**
	Design bending moment	**0.972 kNm**
	Bending moment resistance	**4.3357 kNm**
	Design shear	**1.08 kN**
	Design shear resistance	**28.75 kN**

Location: Wall on grid line A/1-2

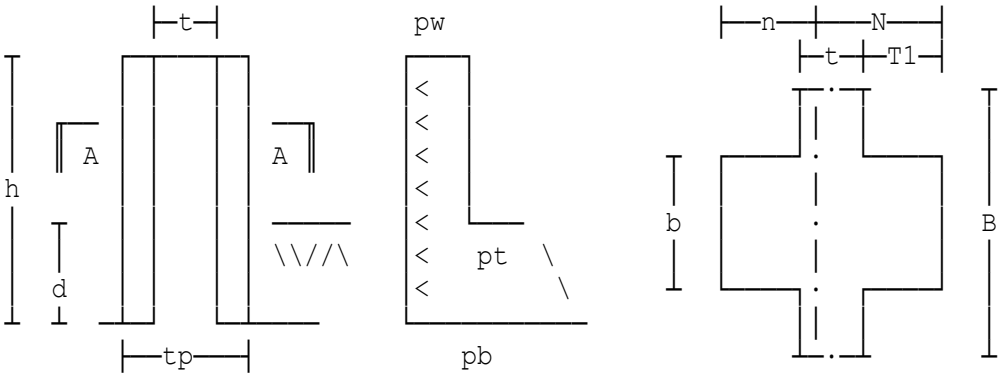

Elevation **Pressure diagram** **SECTION A-A**

Clear height of wall	h=1.1 m
Depth of soil	d=0 m
Thickness of wall	t=100 mm
Overall thickness of wall	tp=450 mm
Offset of pier	T1=0 mm
Width of pier	b=200 mm
Spacing of piers (width of wall)	B=2 m
Partial safety factor (material)	gamM=2.4
Mortar designation to Table NA.2	mortar=4
Masonry density	den(1)=15 kN/m³
	typ(1)=4
Compressive strength of units	po=10.4 N/mm²
Soil density	sdens=18 kN/m³
Soil angle of internal friction	theta'=30°
Surcharge pressure	surch=0 kN/m²
Wind pressure	Wk=0.4 kN/m²

DESIGN SUMMARY	**Wall height**	**1.1 m**
	Wall thickness	**100 mm**
	Effective thickness	**140 mm**
	Section modulus	**0.0087107 m³**
	Characteristic flex strength	**0.2 N/mm²**
	Design bending moment	**0.726 kNm**
	Bending moment resistance	**0.85525 kNm**
	Design shear	**1.32 kN**
	Design shear resistance	**5.6784 kN**

Location: Ex1 - Beam on grid line A/1-2

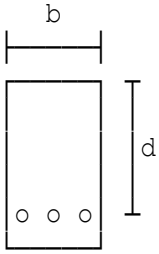

Singly reinforced simply supported rectangular brick beam to BS5628-2:2005

Ultimate bending moment	Mu=40 kNm
Ultimate shear force	Vu=25 kN
Effective depth of beam	d=600 mm
Width of beam	b=250 mm
Span of brick beam	L=4000 mm
Spacing of lateral restraints	Lr=4000 mm
Mortar designation (Table 1)	mortar=2
Compressive strength of units	Sunits=20 N/mm²
Characteristic comp strength	fk=5.6 N/mm²
Partial safety factor	gammam=2.3
Characteristic tensile strength of reinforcement	fy=500 N/mm²
Diameter of reinforcing bars	diam=10 mm
Charac anchorage bond strength	fb=2 N/mm²

DESIGN SUMMARY

Ultimate bending moment	**40 kNm**
Ultimate shear force	**25 kN**
Beam effective depth	**600 mm**
Beam width	**250 mm**
Beam span	**4000 mm**
Tension reinforcement area	**235.62 mm²**
Tensile strength of reinft.	**500 N/mm²**
Resistance moment of section	**87.652 kNm**
Mortar designation	**2**
Compressive strength of units	**20 N/mm²**

Links are not required but according to Clause 8.2.5 nominal links need to be considered by the designer because of the sudden nature of shear failure.

Partial safety factors:

Masonry	**2.3**
Reinforcement strength	**1.15**
Shear strength	**2**
Bond strength	**1.5**

Location: Ex2 - Beam on grid line A/1-2

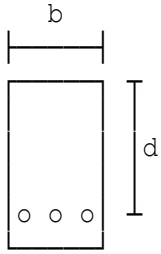

Singly reinforced simply supported rectangular brick beam to BS5628-2:2005

Ultimate bending moment	Mu=40 kNm
Ultimate shear force	Vu=35 kN
Effective depth of beam	d=600 mm
Width of beam	b=250 mm
Span of brick beam	L=4000 mm
Spacing of lateral restraints	Lr=4000 mm
Mortar designation (Table 1)	mortar=2
Compressive strength of units	Sunits=20 N/mm²
Characteristic comp strength	fk=5.6 N/mm²
Partial safety factor	gammam=2.3
Characteristic tensile strength of reinforcement	fy=500 N/mm²
Diameter of reinforcing bars	diam=10 mm
Spacing (<0.75d & <500mm)	sv=200 mm
Tensile strength of links	fy'=250 N/mm²
Diameter of bars for shear	Ds=8 mm
Charac anchorage bond strength	fb=2 N/mm²

DESIGN SUMMARY	**Ultimate bending moment**	**40 kNm**
	Ultimate shear force	**35 kN**
	Beam effective depth	**600 mm**
	Beam width	**250 mm**
	Beam span	**4000 mm**
	Tension reinforcement area	**235.62 mm²**
	Tensile strength of reinft.	**500 N/mm²**
	Resistance moment of section	**87.652 kNm**
	Mortar designation	**2**
	Compressive strength of units	**20 N/mm²**
	Diameter of bars for shear	**8 mm²**
	Spacing of shear links	**200 mm**
	Tensile strength of links	**250 N/mm²**
	Partial safety factors:	
	Masonry	**2.3**
	Reinforcement strength	**1.15**
	Shear strength	**2**
	Bond strength	**1.5**

Location: Ex3 - R2 Solution. Reinforced Brickwork Beam by J Roberts

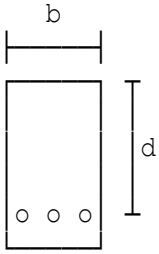

Singly reinforced simply supported rectangular brick beam to BS5628-2:2005

Ultimate bending moment	Mu=86.4 kNm
Ultimate shear force	Vu=82.1 kN
Effective depth of beam	d=410 mm
Width of beam	b=440 mm
Span of brick beam	L=4210 mm
Spacing of lateral restraints	Lr=4000 mm
Mortar designation (Table 1)	mortar=2
Compressive strength of units	Sunits=40 N/mm²
Characteristic comp strength	fk=10.1 N/mm²
Partial safety factor	gammam=2
Characteristic tensile strength of reinforcement	fy=500 N/mm²
Diameter of reinforcing bars	diam=20 mm
Spacing (<0.75d & <500mm)	sv=300 mm
Tensile strength of links	fy'=200 N/mm²
Diameter of bars for shear	Ds=8 mm
Charac anchorage bond strength	fb=2.5 N/mm²

DESIGN SUMMARY	**Ultimate bending moment**	**86.4 kNm**
	Ultimate shear force	**82.1 kN**
	Beam effective depth	**410 mm**
	Beam width	**440 mm**
	Beam span	**4210 mm**
	Tension reinforcement area	**628.32 mm²**
	Tensile strength of reinft.	**500 N/mm²**
	Resistance moment of section	**149.41 kNm**
	Mortar designation	**2**
	Compressive strength of units	**40 N/mm²**
	Diameter of bars for shear	**8 mm²**
	Spacing of shear links	**300 mm**
	Tensile strength of links	**200 N/mm²**
	Partial safety factors:	
	Masonry	**2**
	Reinforcement strength	**1.15**
	Shear strength	**2**
	Bond strength	**1.5**

Location: Ex1 - Beam on grid line A/1-2

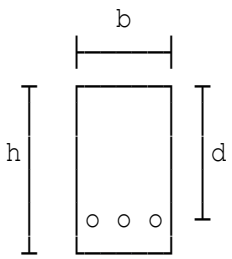

Singly reinforced simply supported rectangular brick beam to EC6 Part 1-1

Design bending moment	Md'=40 kNm
Design shear force	Vd=25 kN
Depth of beam	h=670 mm
Effective depth of beam	d=600 mm
Width of beam	b=250 mm
Bearing length (left support)	t1=328 mm
Bearing length (right support)	t2=328 mm
Clear distance between supports	Lcl=3672 mm
Spacing of lateral restraints	Lr=4000 mm
Mortar designation (Table NA.2)	mortar=2
Compressive strength of units	po=20 N/mm²
Constant K from NA Table NA.4	K(1)=0.5
Height of masonry unit	hu=65 mm
Least horiz. dimension of units	lhd=100 mm
Partial safety factor	gamM=2.3
Characteristic tensile strength	fy=500 N/mm²
Diameter of reinforcing bars	diam=10 mm
Char anchorage bond strength	fbok=3.4 N/mm²

DESIGN SUMMARY

Design bending moment	**40 kNm**
Design shear force	**25 kN**
Beam effective depth	**600 mm**
Beam width	**250 mm**
Beam span	**4000 mm**
Tension reinforcement area	**235.62 mm²**
Tensile strength of reinft	**500 N/mm²**
Resistance moment of section	**65.706 kNm**
Mortar designation	**2**
Compressive strength of units	**20 N/mm²**

Wall to be constructed using Group 1 units

Links are not required, however nominal links need to be considered by the designer because of the sudden nature of shear failure.

Partial safety factors:

Masonry	**2.3**
Reinforcement strength	**1.15**
Shear strength of masonry	**2**
Bond strength	**1.5**

Location: Ex2 - Beam on grid line A/1-2

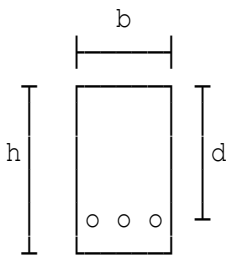

Singly reinforced simply supported rectangular brick beam to EC6 Part 1-1

Design bending moment	Md'=40 kNm
Design shear force	Vd=25 kN
Depth of beam	h=670 mm
Effective depth of beam	d=600 mm
Width of beam	b=250 mm
Bearing length (left support)	t1=328 mm
Bearing length (right support)	t2=328 mm
Clear distance between supports	Lcl=3672 mm
Spacing of lateral restraints	Lr=4000 mm
Mortar designation (Table NA.2)	mortar=2
Compressive strength of units	po=20 N/mm²
Constant K from NA Table NA.4	K(1)=0.5
Height of masonry unit	hu=65 mm
Least horiz. dimension of units	lhd=100 mm
Partial safety factor	gamM=2.3
Characteristic tensile strength	fy=500 N/mm²
Diameter of reinforcing bars	diam=10 mm
Char anchorage bond strength	fbok=3.4 N/mm²

DESIGN SUMMARY

Design bending moment	**40 kNm**
Design shear force	**25 kN**
Beam effective depth	**600 mm**
Beam width	**250 mm**
Beam span	**4000 mm**
Tension reinforcement area	**235.62 mm²**
Tensile strength of reinft	**500 N/mm²**
Resistance moment of section	**65.706 kNm**
Mortar designation	**2**
Compressive strength of units	**20 N/mm²**

Wall to be constructed using Group 1 units

Links are not required, however nominal links need to be considered by the designer because of the sudden nature of shear failure.

Partial safety factors:

Masonry	**2.3**
Reinforcement strength	**1.15**
Shear strength of masonry	**2**
Bond strength	**1.5**

Location: Ex3 - R2 Solution. Reinforced Brickwork Beam by J Roberts

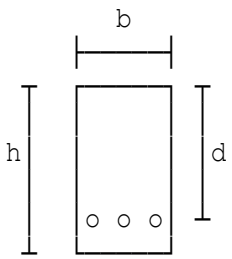

Singly reinforced simply supported rectangular brick beam to EC6 Part 1-1

Design bending moment	Md'=86.4 kNm
Design shear force	Vd=82.1 kN
Depth of beam	h=480 mm
Effective depth of beam	d=410 mm
Width of beam	b=440 mm
Bearing length (left support)	t1=328 mm
Bearing length (right support)	t2=328 mm
Clear distance between supports	Lcl=3882 mm
Spacing of lateral restraints	Lr=4000 mm
Mortar designation (Table NA.2)	mortar=2
Compressive strength of units	po=40 N/mm²
Constant K from NA Table NA.4	K(1)=0.5
Height of masonry unit	hu=65 mm
Least horiz. dimension of units	lhd=100 mm
Partial safety factor	gamM=2
Characteristic tensile strength	fy=500 N/mm²
Diameter of reinforcing bars	diam=20 mm
Spacing (<0.75d & <300mm)	sv=300 mm
Char tensile strength of links	fy'=200 N/mm²
Diameter of shear link	Ds=8 mm
Number of link legs	nleg=2
Char anchorage bond strength	fbok=3.4 N/mm²
Concrete cover to reinforcement	cover=40 mm

DESIGN SUMMARY	**Design bending moment**	**86.4 kNm**
	Design shear force	**82.1 kN**
	Beam effective depth	**410 mm**
	Beam width	**440 mm**
	Beam span	**4210 mm**
	Tension reinforcement area	**628.32 mm²**
	Tensile strength of reinft	**500 N/mm²**
	Resistance moment of section	**100.88 kNm**
	Mortar designation	**2**
	Compressive strength of units	**40 N/mm²**
	Wall to be constructed using Group 1 units	
	Diameter of bars for shear	**8 mm²**
	Spacing of shear links	**300 mm**
	Tensile strength of links	**200 N/mm²**
	Partial safety factors:	
	Masonry	**2**
	Reinforcement strength	**1.15**

Shear strength of masonry	**2**
Bond strength	**1.5**

Location: Ex4 - Beam on grid line A/1-2

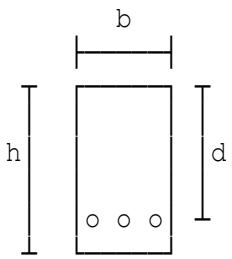

Singly reinforced simply supported rectangular brick beam to EC6 Part 1-1

Design bending moment	Md'=40 kNm
Design shear force	Vd=25 kN
Depth of beam	h=670 mm
Effective depth of beam	d=600 mm
Width of beam	b=250 mm
Bearing length (left support)	t1=328 mm
Bearing length (right support)	t2=328 mm
Clear distance between supports	Lcl=3672 mm
Spacing of lateral restraints	Lr=4000 mm
Mortar designation (Table NA.2)	mortar=2
Compressive strength of units	po=20 N/mm²
Constant K from NA Table NA.4	K(1)=0.5
Normalized mean comp strength	fbn=8.5 N/mm²
Partial safety factor	gamM=2.3
Characteristic tensile strength	fy=500 N/mm²
Diameter of reinforcing bars	diam=10 mm
Char anchorage bond strength	fbok=3.4 N/mm²

DESIGN SUMMARY

Design bending moment	**40 kNm**
Design shear force	**25 kN**
Beam effective depth	**600 mm**
Beam width	**250 mm**
Beam span	**4000 mm**
Tension reinforcement area	**235.62 mm²**
Tensile strength of reinft	**500 N/mm²**
Resistance moment of section	**40.447 kNm**
Mortar designation	**2**
Compressive strength of units	**20 N/mm²**

Wall to be constructed using Group 1 units

Links are not required, however nominal links need to be considered by the designer because of the sudden nature of shear failure.

Partial safety factors:

Masonry	**2.3**
Reinforcement strength	**1.15**
Shear strength of masonry	**2**
Bond strength	**1.5**

Location: Bearing under beam B1

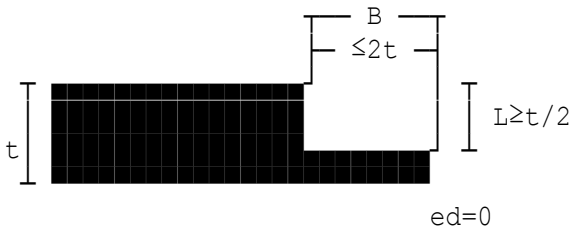

Plan view on wall

Bearing type 1
see Figure 5(a) in
BS5628

Proposed width of bearing	B=150 mm
Proposed length of bearing	L=100 mm
Mortar designation to Table 1	mortar=3
Masonry type (1=clay 2=cal silicate 3=conc brick 4=block)	typ(1)=4
Height	hb=215 mm
Least horiz dimension	lhd=100 mm
Compressive strength of units	po=10.4 N/mm²
Material partial safety factor	gammam=2.5
Characteristic dead load	DL=20 kN
Characteristic live load	LL=10 kN

DESIGN SUMMARY	**Bearing width**	**150 mm**
	Length of bearing	**100 mm**
	Clear edge distance	**0 mm**
	Char comp strength	**8.2 N/mm²**
	Local bearing safety factor	**1.25**
	Design bearing resistance	**61.5 kN**
	Design load on bearing	**44 kN**

Location: Bearing under beam B2

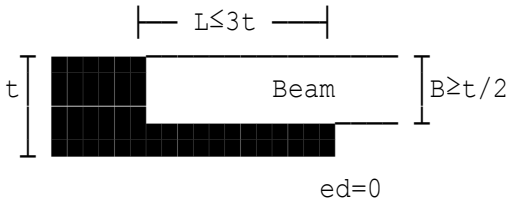

Plan view on wall

Bearing type 1
see Figure 5(a) in
BS5628

Proposed width of bearing	B=100 mm
Proposed length of bearing	L=250 mm
Mortar designation to Table 1	mortar=3
Masonry type (1=clay 2=cal silicate 3=conc brick 4=block)	typ(1)=2
Compressive strength of units	po=10 N/mm²
Material partial safety factor	gammam=2.5
Characteristic dead load	DL=20 kN
Characteristic live load	LL=10 kN
Length of bearing to be used	L=250 mm

WARNING:
Length of bearing should be within range 258.82 mm to 300 mm

Location: Bearing under beam B3

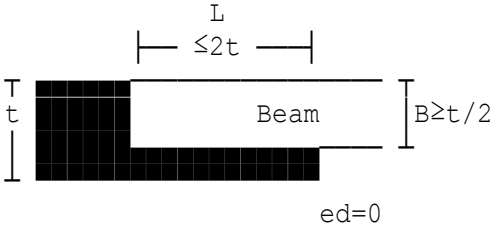

Plan view on wall

Bearing type 2
see Figure 5(b) in BS5628

Proposed width of bearing	B=100 mm
Proposed length of bearing	L=200 mm
Mortar designation to Table 1	mortar=3
Masonry type (1=clay 2=cal silicate 3=conc brick 4=block)	typ(1)=3
Compressive strength of units	po=10.4 N/mm²
Material partial safety factor	gammam=2.5
Characteristic dead load	DL=20 kN
Characteristic live load	LL=10 kN

DESIGN SUMMARY	**Bearing width**	**100 mm**
	Length of bearing	**200 mm**
	Clear edge distance	**0 mm**
	Char comp strength	**4.1 N/mm²**
	Local bearing safety factor	**1.5**
	Design bearing resistance	**49.2 kN**
	Design load on bearing	**44 kN**

Location: Bearing under beam B4

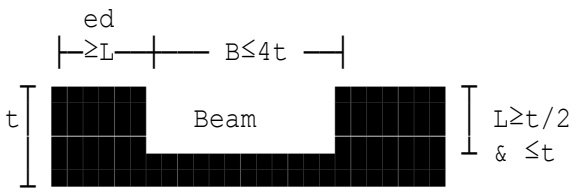

Plan view on wall

Bearing type 2
see Figure 5(b) in BS5628

Proposed width of bearing	B=150 mm
Proposed length of bearing	L=100 mm
Clear edge distance to beam	ed=100 mm
Mortar designation to Table 1	mortar=3
Masonry type (1=clay 2=cal silicate 3=conc brick 4=block)	typ(1)=4
Height	hb=215 mm
Least horiz dimension	lhd=100 mm
Compressive strength of units	po=10.4 N/mm²
Material partial safety factor	gammam=2.5
Characteristic dead load	DL=20 kN
Characteristic live load	LL=10 kN

DESIGN SUMMARY	**Bearing width**	**150 mm**
	Length of bearing	**100 mm**
	Clear edge distance	**100 mm**
	Char comp strength	**8.2 N/mm²**
	Local bearing safety factor	**1.5**
	Design bearing resistance	**73.8 kN**
	Design load on bearing	**44 kN**

Location: Bearing under beam B5

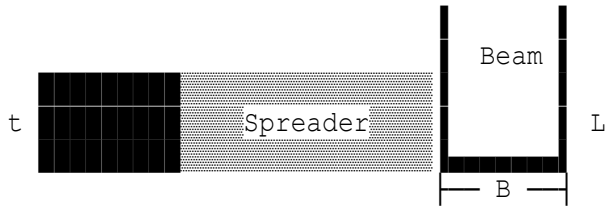

Plan view on wall

Bearing type 3
see Figure 5(c) in
BS5628.

t=wall thickness L=length of bearing ed=0 L=t

Proposed width of bearing B=133 mm
Proposed length of bearing L=225 mm
Mortar designation to Table 1 mortar=3
Masonry type (1=clay 2=cal silicate 3=conc brick 4=block) typ(1)=1
Compressive strength of units po=20 N/mm²
Material partial safety factor gammam=3.1
Characteristic dead load DL=35.3 kN
Characteristic live load LL=11.6 kN
Length of spreader beam sl=450 mm
Offset load distance x1=200 mm

DESIGN SUMMARY	**Length of spreader beam**	**450 mm**
	Width of spreader beam	**225 mm**
	Eccentricity of load	**25 mm**
	Char comp strength	**3.2258 N/mm²**
	Local bearing safety factor	**2**
	Design stress capacity	**3.2258 N/mm²**
	Max stress under spreader	**0.89521 N/mm²**

Location: Bearing under beam B6

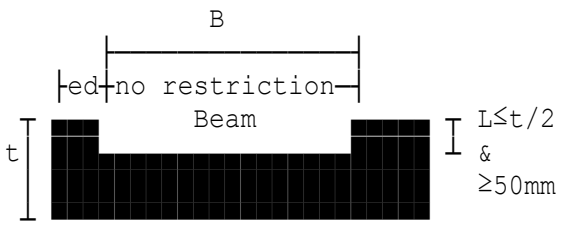

Plan view on wall

Bearing type 1
see Figure 5(a) in
BS5628

Proposed width of bearing	B=150 mm
Proposed length of bearing	L=50 mm
Clear edge distance to beam	ed=50 mm
Mortar designation to Table 1	mortar=3
Masonry type (1=clay 2=cal silicate 3=conc brick 4=block)	typ(1)=4
Height	hb=215 mm
Least horiz dimension	lhd=100 mm
Compressive strength of units	po=10.4 N/mm²
Material partial safety factor	gammam=2.5
Characteristic dead load	DL=20 kN
Characteristic live load	LL=10 kN
Length of spreader beam	sl=450 mm
Offset load distance	x1=225 mm

DESIGN SUMMARY	**Length of spreader beam**	**450 mm**
	Width of spreader beam	**50 mm**
	Eccentricity of load	**0 mm**
	Char comp strength	**4.1 N/mm²**
	Local bearing safety factor	**1.25**
	Design stress capacity	**4.1 N/mm²**
	Max stress under spreader	**1.9556 N/mm²**

Location: Bearing under beam B7

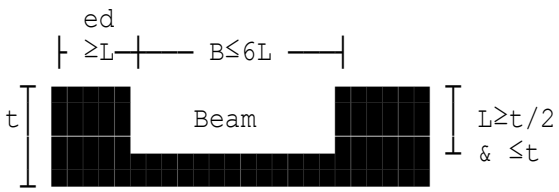

Plan view on wall

Bearing type 1
see Figure 5(a) in BS5628

Proposed width of bearing	B=200 mm
Proposed length of bearing	L=75 mm
Clear edge distance to beam	ed=100 mm

Mortar designation to Table 1	mortar=3
Masonry type (1=clay 2=cal silicate 3=conc brick 4=block)	typ(1)=4
Height	hb=215 mm
Least horiz dimension	lhd=100 mm
Compressive strength of units	po=10.4 N/mm²
Material partial safety factor	gammam=2.5
Characteristic dead load	DL=30 kN
Characteristic live load	LL=20 kN
Length of bearing to be used	L=75 mm

WARNING:
Length of bearing should be within range 90.244 mm to 100 mm

Location: Bearing under beam B8

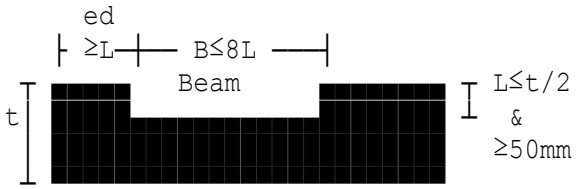

Plan view on wall

Bearing type 2
see Figure 5(b) in
BS5628

Proposed width of bearing	B=150 mm
Proposed length of bearing	L=50 mm
Clear edge distance to beam	ed=50 mm
Mortar designation to Table 1	mortar=3
Masonry type (1=clay 2=cal silicate 3=conc brick 4=block)	typ(1)=4
Height	hb=215 mm
Least horiz dimension	lhd=100 mm
Compressive strength of units	po=10.4 N/mm²
Material partial safety factor	gammam=2.5
Characteristic dead load	DL=20 kN
Characteristic live load	LL=10 kN
Length of spreader beam	sl=450 mm
Offset load distance	x1=75 mm

WARNING:
Max stress under spreader > Max permissible
i.e. fkm (7.8222 N/mm²) > fk1 (6.56 N/mm²)

Location: Bearing under beam B1

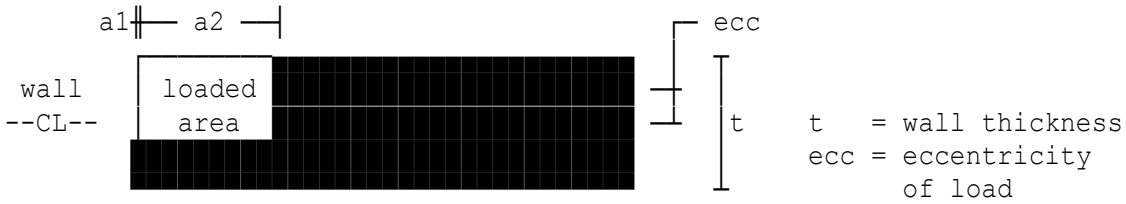

Plan on loaded area

Wall thickness	t=100 mm
Load bearing length // to wall	a2=150 mm
Load bearing width perp. to wall	a3=100 mm
Mortar designation to Table 1	mortar=3
Masonry type (1=clay 2=cal silicate 3=conc brick 4=block)	typ(1)=4
Compressive strength of units	po=10.4 N/mm²
Constant K from NA Table NA.4	K(1)=0.75
Height of masonry unit	hu=215 mm
Least horiz. dimension of units	lhd=100 mm
Partial safety factor (material)	gamM=2.3
Characteristic permanent load	Gk=20 kN
Characteristic variable load	Qk=10 kN

DESIGN	**Length of bearing**	**150 mm**
SUMMARY	**Bearing width**	**100 mm**
	Distance from end of wall	**0 mm**
	Char compressive strength	**7.337 N/mm²**
	Design load resistance	**59.812 kN**
	Design load on bearing	**42 kN**

The wall will also need to be checked for vertical loading at the top, middle and bottom. At the middle of the wall account will need to be taken of any overlap of the spread of the concentrated loads plus the applied design vertical loads. Adopt Group 1 units.

Location: Bearing under beam B2

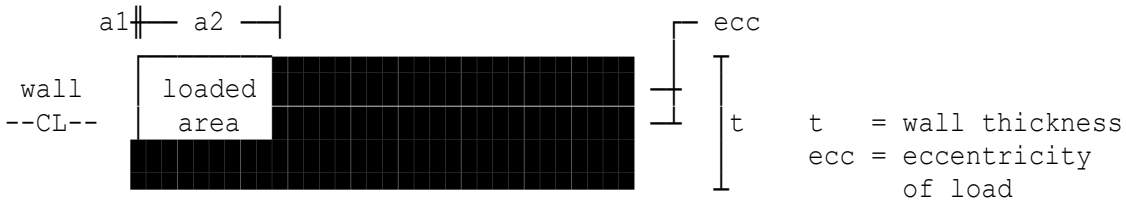

Plan on loaded area

Wall thickness	t=100 mm
Load bearing length // to wall	a2=250 mm
Load bearing width perp. to wall	a3=100 mm
Mortar designation to Table 1	mortar=3
Masonry type (1=clay 2=cal silicate 3=conc brick 4=block)	typ(1)=2
Compressive strength of units	po=10 N/mm²
Constant K from NA Table NA.4	K(1)=0.5
Height of masonry unit	hu=65 mm
Least horiz. dimension of units	lhd=100 mm
Partial safety factor (material)	gamM=2.3
Characteristic permanent load	Gk=20 kN
Characteristic variable load	Qk=10 kN

DESIGN	**Length of bearing**	**250 mm**
SUMMARY	**Bearing width**	**100 mm**
	Distance from end of wall	**0 mm**
	Char compressive strength	**3.3899 N/mm²**
	Design load resistance	**44.841 kN**
	Design load on bearing	**42 kN**

The wall will also need to be checked for vertical loading at the top, middle and bottom. At the middle of the wall account will need to be taken of any overlap of the spread of the concentrated loads plus the applied design vertical loads. Adopt Group 1 units.

Location: Bearing under beam B3

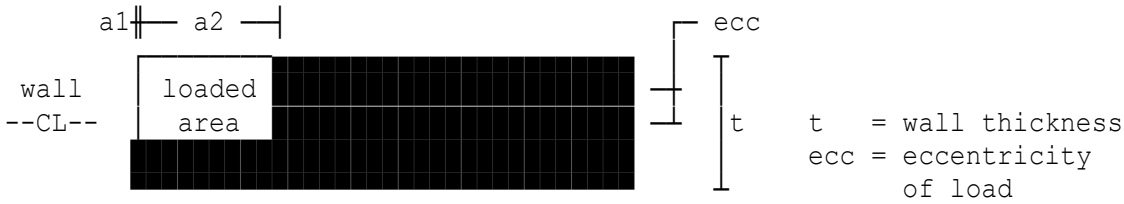

Plan on loaded area

Wall thickness	t=100 mm
Load bearing length // to wall	a2=200 mm
Load bearing width perp. to wall	a3=100 mm
Mortar designation to Table 1	mortar=3
Masonry type (1=clay 2=cal silicate 3=conc brick 4=block)	typ(1)=3
Compressive strength of units	po=10.4 N/mm²
Constant K from NA Table NA.4	K(1)=0.75
Height of masonry unit	hu=65 mm
Least horiz. dimension of units	lhd=100 mm
Partial safety factor (material)	gamM=2.3
Characteristic permanent load	Gk=20 kN
Characteristic variable load	Qk=10 kN

DESIGN	**Length of bearing**	**200 mm**
SUMMARY	**Bearing width**	**100 mm**
	Distance from end of wall	**0 mm**
	Char compressive strength	**5.2263 N/mm²**
	Design load resistance	**56.808 kN**
	Design load on bearing	**42 kN**

The wall will also need to be checked for vertical loading at the top, middle and bottom. At the middle of the wall account will need to be taken of any overlap of the spread of the concentrated loads plus the applied design vertical loads. Adopt Group 1 units.

Location: Bearing under beam B4

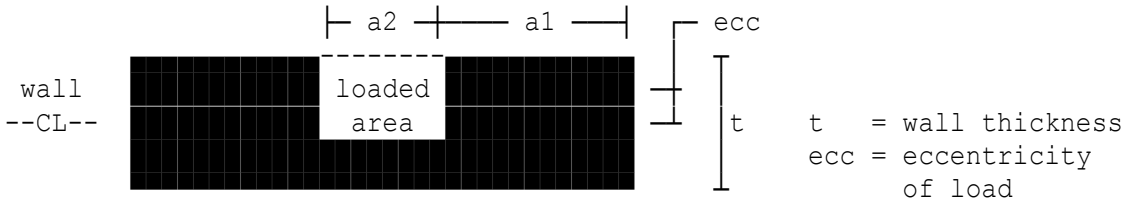

Plan on loaded area

Wall thickness	t=100 mm
Load bearing length // to wall	a2=150 mm
Load bearing width perp. to wall	a3=100 mm
Mortar designation to Table 1	mortar=3
Masonry type (1=clay 2=cal silicate 3=conc brick 4=block)	typ(1)=4
Compressive strength of units	po=10.4 N/mm²
Constant K from NA Table NA.4	K(1)=0.75
Height of masonry unit	hu=215 mm
Least horiz. dimension of units	lhd=100 mm
Partial safety factor (material)	gamM=2.3
Characteristic permanent load	Gk=20 kN
Characteristic variable load	Qk=10 kN

DESIGN	**Length of bearing**	**150 mm**
SUMMARY	**Bearing width**	**100 mm**
	Distance from end of wall	**100 mm**
	Char compressive strength	**7.337 N/mm²**
	Design load resistance	**60.769 kN**
	Design load on bearing	**42 kN**

The wall will also need to be checked for vertical loading at the top, middle and bottom. At the middle of the wall account will need to be taken of any overlap of the spread of the concentrated loads plus the applied design vertical loads. Adopt Group 1 units.

Location: Bearing under beam B5

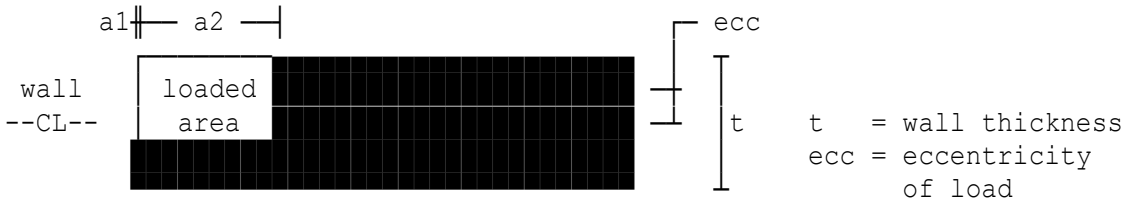

Plan on loaded area

Wall thickness	t=225 mm
Load bearing length // to wall	a2=133 mm
Load bearing width perp. to wall	a3=225 mm
Mortar designation to Table 1	mortar=3
Masonry type (1=clay 2=cal silicate 3=conc brick 4=block)	typ(1)=1
Compressive strength of units	po=20 N/mm²
Constant K from NA Table NA.4	K(1)=0.5
Height of masonry unit	hu=65 mm
Least horiz. dimension of units	lhd=100 mm
Partial safety factor (material)	gamM=2.7
Characteristic permanent load	Gk=35.3 kN
Characteristic variable load	Qk=11.6 kN

DESIGN	**Length of bearing**	**133 mm**
SUMMARY	**Bearing width**	**225 mm**
	Distance from end of wall	**0 mm**
	Char compressive strength	**5.5068 N/mm²**
	Design load resistance	**76.293 kN**
	Design load on bearing	**65.055 kN**

The wall will also need to be checked for vertical loading at the top, middle and bottom. At the middle of the wall account will need to be taken of any overlap of the spread of the concentrated loads plus the applied design vertical loads. Adopt Group 1 units.

Location: Bearing under beam B6

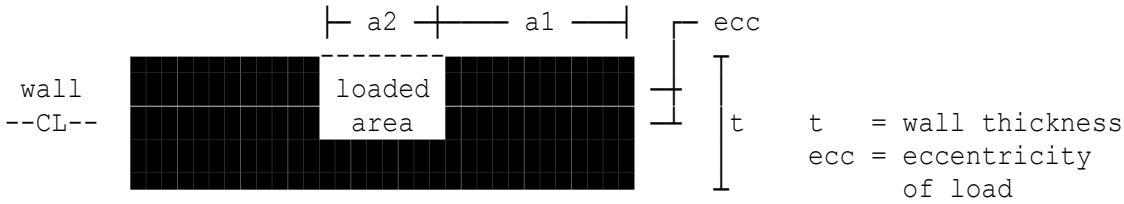

Plan on loaded area

Wall thickness	t=100 mm
Load bearing length // to wall	a2=150 mm
Load bearing width perp. to wall	a3=50 mm
Mortar designation to Table 1	mortar=3
Masonry type (1=clay 2=cal silicate 3=conc brick 4=block)	typ(1)=4
Compressive strength of units	po=10.4 N/mm²
Constant K from NA Table NA.4	K(1)=0.75
Height of masonry unit	hu=215 mm
Least horiz. dimension of units	lhd=100 mm
Partial safety factor (material)	gamM=2.3
Characteristic permanent load	Gk=20 kN
Characteristic variable load	Qk=10 kN

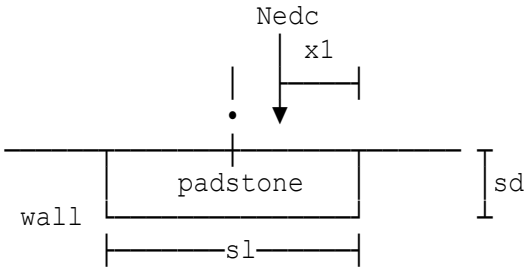

x1 = offset load distance
sd = padstone height
sl = padstone length

Padstone length	sl=450 mm
Padstone width	sb=50 mm
Offset load distance	x1=225 mm
Padstone height to be adopted	sd=259.81 mm

DESIGN SUMMARY	**Length of concrete padstone**	**450 mm**
	Width of concrete padstone	**50 mm**
	Concrete padstone height	**259.81 mm**
	Eccentricity of load	**0 mm**
	Design strength under bearing	**4.0194 N/mm²**
	Design stress under spreader	**1.8667 N/mm²**

The wall will also need to be checked for vertical loading at the top, middle and bottom. At the middle of the wall account will need to be taken of any overlap of the spread of the concentrated loads plus the applied design vertical loads. Adopt Group 1 units.

Location: Bearing under beam B7

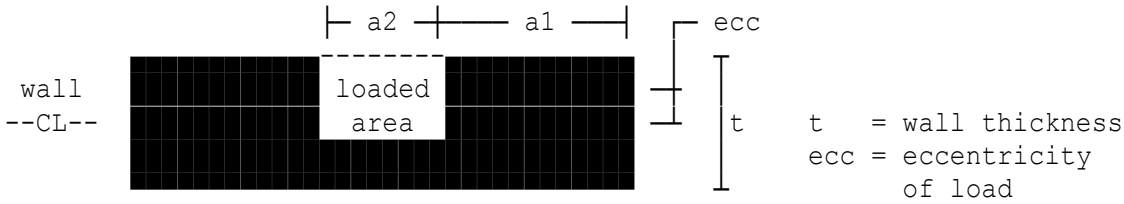

Plan on loaded area

Wall thickness	t=100 mm
Load bearing length // to wall	a2=200 mm
Load bearing width perp. to wall	a3=75 mm
Mortar designation to Table 1	mortar=3
Masonry type (1=clay 2=cal silicate 3=conc brick 4=block)	typ(1)=4
Compressive strength of units	po=10.4 N/mm²
Constant K from NA Table NA.4	K(1)=0.75
Height of masonry unit	hu=215 mm
Least horiz. dimension of units	lhd=100 mm
Partial safety factor (material)	gamM=2.3
Characteristic permanent load	Gk=30 kN
Characteristic variable load	Qk=20 kN

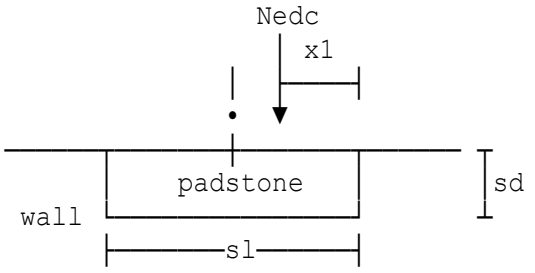

x1 = offset load distance
sd = padstone height
sl = padstone length

Padstone length	sl=450 mm
Padstone width	sb=100 mm
Offset load distance	x1=225 mm
Padstone height to be adopted	sd=216.51 mm

DESIGN SUMMARY	**Length of concrete padstone**	**450 mm**
	Width of concrete padstone	**100 mm**
	Concrete padstone height	**216.51 mm**
	Eccentricity of load	**0 mm**
	Design strength under bearing	**4.0513 N/mm²**
	Design stress under spreader	**1.5667 N/mm²**

The wall will also need to be checked for vertical loading at the top, middle and bottom. At the middle of the wall account will need to be taken of any overlap of the spread of the concentrated loads plus the applied design vertical loads. Adopt Group 1 units.

Location: Bearing under beam B8

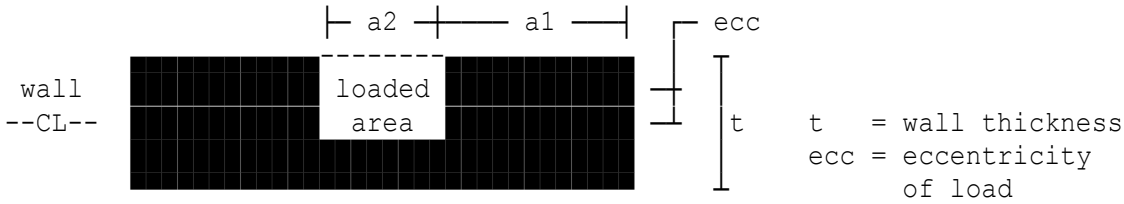

Plan on loaded area

Wall thickness	t=100 mm
Load bearing length // to wall	a2=150 mm
Load bearing width perp. to wall	a3=50 mm
Mortar designation to Table 1	mortar=3
Masonry type (1=clay 2=cal silicate 3=conc brick 4=block)	typ(1)=4
Compressive strength of units	po=10.4 N/mm²
Constant K from NA Table NA.4	K(1)=0.75
Height of masonry unit	hu=215 mm
Least horiz. dimension of units	lhd=100 mm
Partial safety factor (material)	gamM=2.3
Characteristic permanent load	Gk=20 kN
Characteristic variable load	Qk=10 kN

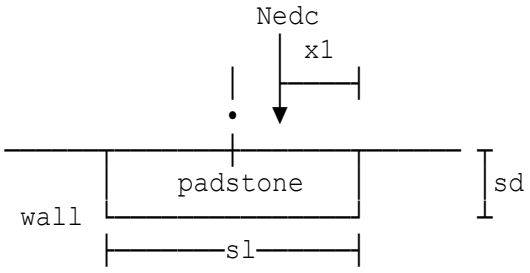

x1 = offset load distance
sd = padstone height
sl = padstone length

Padstone length	sl=450 mm
Padstone width	sb=100 mm
Offset load distance	x1=225 mm
Padstone height to be adopted	sd=259.81 mm

DESIGN SUMMARY	**Length of concrete padstone**	**450 mm**
	Width of concrete padstone	**100 mm**
	Concrete padstone height	**259.81 mm**
	Eccentricity of load	**0 mm**
	Design strength under bearing	**4.0194 N/mm²**
	Design stress under spreader	**0.93333 N/mm²**

The wall will also need to be checked for vertical loading at the top, middle and bottom. At the middle of the wall account will need to be taken of any overlap of the spread of the concentrated loads plus the applied design vertical loads. Adopt Group 1 units.

Location: Wall panel 3

BS EN 1996-1-1:2005, Annex C, gives a simplified method for calculating the out-of-plane eccentricity of loading on masonry walls. The structure is simplified to a sub-frame for the evaluation of moments at the top and bottom of the wall.

Partial safety factors

Permanent actions	gamG=1.35
Variable actions	gamQ=1.5

Masonry and floor details

Mortar designation (Table NA.2)	mortar=3
Masonry type (1=clay 2=cal silicate 3=conc brick 4=block)	typ(1)=4
Compressive strength of units	po=7.3 N/mm²
Constant K from NA Table NA.4	K(1)=0.75
Height of masonry unit	hu=215 mm
Least horiz. dimension of units	lhd=140 mm

Moment at the top of wall - (at node point A)

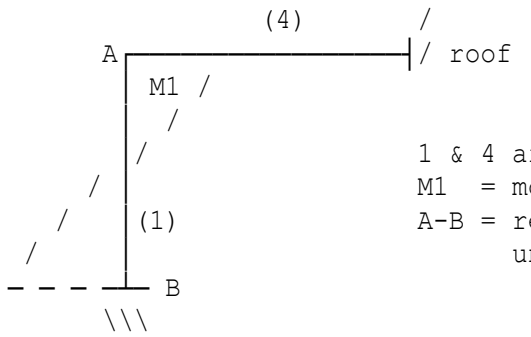

1 & 4 are member numbers
M1 = moment at top of wall
A-B = represents the wall under consideration

Masonry Wall 1

Wall thickness	t1'=140 mm
Wall clear height	h1'=2800 mm
Modulus of elasticity	E1'=5492.4 N/mm²

Roof slab 4

Slab thickness	t4'=200 mm
Length of member 4	l4'=6500 mm
Modulus of elasticity	E4'=36000 N/mm²
Char permanent load on member 4	Gk4'=4.3 kN/m²
Char variable load on member 4	Qk4'=1.5 kN/m²

Moment at the bottom of the wall - (at node point B)

```
          \\\
        A ──┬── - - -
            │     /
       (2)  │   /
            │ /
        /   │                          1 ,2 & 4 are member numbers
      /           (4)     /            M2  = moment at bot of wall
M2 - - - ──────────────┤/ floor       A-B = represents the wall
            B                                under consideration

       (1)  │
            │
          ──┴──
          \\\
```

Masonry wall 1

Wall thickness	t1=140 mm
Wall clear height	h1=2800 mm
Modulus of elasticity of wall	E1=5492.4 N/mm²

Masonry wall 2

Wall thickness	t2=140 mm
Wall height	h2=2800 mm
Modulus of elasticity of wall	E2=5492.4 N/mm²
2nd moment of area of wall	I2=228.67E6 mm⁴
compute	c2=448.55 kNm

Floor slab member 4

Slab thickness	t4=200 mm
Length of member 4	l4=6500 mm
Modulus of elasticity	E4=36000 N/mm²
Char permanent load on member 4	Gk4=4.3 kN/m²
Char variable load on member 4	Qk4=3.5 kN/m²

Eccentricity of roof load

The eccentricity of roof load on masonry wall can be evaluated by dividing the design moment at the top of wall by the design vertical load at the top of the wall.

Design vert. load @ top of wall	Nid=26.3 kN/m
Eccentricity of roof load	ecc=ABS(M1)*1000/Nid=67.422 mm

DESIGN SUMMARY	**Wall clear height**	**2800 mm**
	Wall thickness	**140 mm**
	Eccentricity of floor load	**67.422 mm**
	Design moment (top of wall)	**-1.7732 kNm/m**
	Design moment @ mid-height	**0.19497 kNm/m**
	Design moment (bot of wall)	**-2.1631 kNm/m**

Location: Wall panel 2

BS EN 1996-1-1:2005, Annex C, gives a simplified method for calculating the out-of-plane eccentricity of loading on masonry walls. The structure is simplified to a sub-frame for the evaluation of moments at the top and bottom of the wall.

Partial safety factors

Permanent actions	gamG=1.35
Variable actions	gamQ=1.5

Moment at the top of wall - (at node point A)

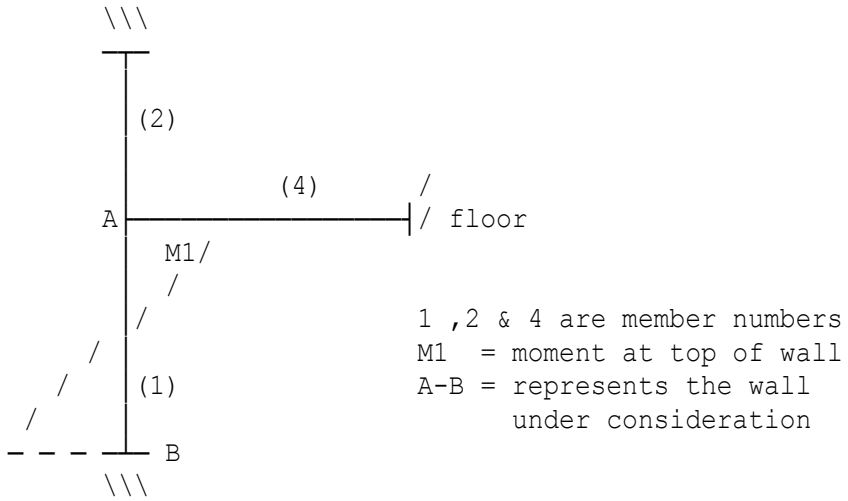

Masonry Wall 1

Wall thickness	t1'=140 mm
Wall clear height	h1'=2800 mm
Modulus of elasticity	E1'=4050 N/mm²

Masonry wall 2

Wall thickness	t2'=140 mm
Wall height	h2'=2800 mm
Modulus of elasticity of wall	E2'=4050 N/mm²
2nd moment of area of wall	I2'=1000*t2'^3/12=228.67E6 mm⁴
compute	c2=E2'*I2'/h2'*1E-6=330.75 kNm

Floor slab 4

Slab thickness	t4'=200 mm
Length of member 4	l4'=6500 mm
Modulus of elasticity	E4'=36000 N/mm²
Char permanent load on member 4	Gk4'=4.3 kN/m²
Char variable load on member 4	Qk4'=3.5 kN/m²

Moment at the bottom of the wall - (at node point B)

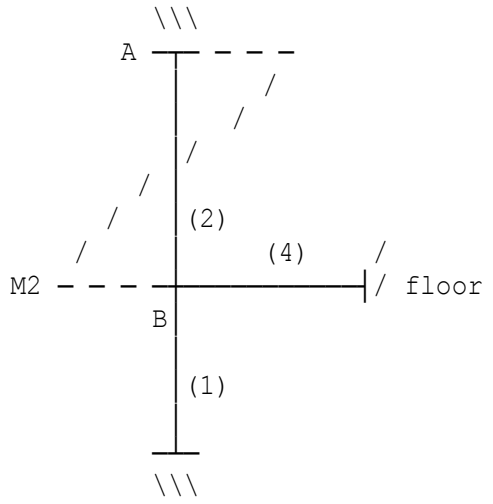

1, 2 & 4 are member numbers
M2 = moment at bot of wall
A-B = represents the wall under consideration

Masonry wall 1

Wall thickness	t1=140 mm
Wall clear height	h1=3300 mm
Modulus of elasticity of wall	E1=4050 N/mm²

Masonry wall 2

Wall thickness	t2=140 mm
Wall height	h2=2800 mm
Modulus of elasticity of wall	E2=4050 N/mm²
2nd moment of area of wall	I2=228.67E6 mm⁴
compute	c2=330.75 kNm

Floor slab member 4

Slab thickness	t4=200 mm
Length of member 4	l4=6500 mm
Modulus of elasticity	E4=36000 N/mm²
Char permanent load on member 4	Gk4=4.3 kN/m²
Char variable load on member 4	Qk4=3.5 kN/m²

DESIGN SUMMARY	**Wall clear height**	**2800 mm**
	Wall thickness	**140 mm**
	Design moment (top of wall)	**-1.6939 kNm/m**
	Design moment @ mid-height	**0.011319 kNm/m**
	Design moment (bot of wall)	**-1.7166 kNm/m**

Location: Wall panel 1

BS EN 1996-1-1:2005, Annex C, gives a simplified method for calculating the out-of-plane eccentricity of loading on masonry walls. The structure is simplified to a sub-frame for the evaluation of moments at the top and bottom of the wall.

Partial safety factors

Permanent actions	gamG=1.35
Variable actions	gamQ=1.5

Moment at the top of wall - (at node point A)

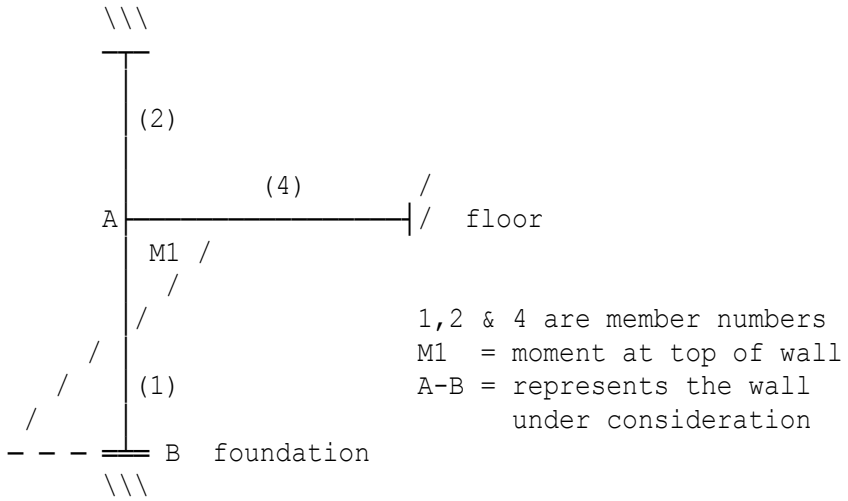

Masonry Wall 1

Wall thickness	t1'=140 mm
Wall clear height	h1'=3300 mm
Modulus of elasticity	E1'=4050 N/mm²

Masonry wall 2

Wall thickness	t2'=140 mm
Wall height	h2'=2800 mm
Modulus of elasticity of wall	E2'=4050 N/mm²
2nd moment of area of wall	I2'=1000*t2'^3/12=228.67E6 mm⁴
compute	c2=E2'*I2'/h2'*1E-6=330.75 kNm

Floor slab 4

Slab thickness	t4'=200 mm
Length of member 4	l4'=6500 mm
Modulus of elasticity	E4'=36000 N/mm²
Char permanent load on member 4	Gk4'=4.3 kN/m²
Char variable load on member 4	Qk4'=3.5 kN/m²

Moment at the bottom of the wall - (at node point B)

```
                \\\
            A ──┬── - -     floor
                │    /
                │  /
                │/                 (1) = are member numbers
              /│                  M2  = moment at bot of wall
            /  │(1)               A-B = represents the wall
          /    │                        under consideration
        M2 - - - ═══ B  foundation
                \\\
```

DESIGN SUMMARY	**Wall clear height**	**3300 mm**
	Wall thickness	**140 mm**
	Design moment (top of wall)	**-1.4565 kNm/m**
	Design moment @ mid-height	**-0.36412 kNm/m**
	Design moment (bot of wall)	**-0.72824 kNm/m**

Location: Wall panel 6

BS EN 1996-1-1:2005, Annex C, gives a simplified method for calculating the out-of-plane eccentricity of loading on masonry walls. The structure is simplified to a sub-frame for the evaluation of moments at the top and bottom of the wall.

Partial safety factors

Permanent actions	gamG=1.35
Variable actions	gamQ=1.5

Moment at the top of wall - (at node point A)

```
\       (3)     A          (4)     /
\├──────────────────────────────┤/ roof
                 │  M1/
                 │  /
                 │/                1 ,3 & 4 are member numbers
              /  │                M1  = moment at top of wall
            /    │(1)             A-B = represents the wall
          /      │                      consideration
        - - - ──┴── B
              \\\
```

Masonry Wall 1

Wall thickness	t1'=140 mm
Wall clear height	h1'=2800 mm
Modulus of elasticity	E1'=4050 N/mm²

Roof slab 3

Slab thickness	t3'=200 mm
Length of member 3	l3'=5000 mm
Modulus of elasticity	E3'=36000 N/mm²

Roof slab 4

Slab thickness	t4'=200 mm
Length of member 4	l4'=6500 mm
Modulus of elasticity	E4'=36000 N/mm²
Char permanent load on member 3	Gk3'=4.3 kN/m²
Char variable load on member 3	Qk3'=1.5 kN/m²
Char permanent load on member 4	Gk4'=4.3 kN/m²
Char variable load on member 4	Qk4'=1.5 kN/m²

Moment at the bottom of the wall - (at node point B)

```
              \\\
            A ──┬── - - - roof
                │     /
            (2) │   /
                │ /
              / │                          1,2,3 & 4 are member numbers
\    (3)    /   │       (4)      /         M2  = moment at bot of wall
\├──────────────┼──────────────┤/ floor    A-B = represents the wall
          M2    B                                under consideration

            (1) │
                │
              \\\
```

Masonry wall 1

Wall thickness	t1=140 mm
Wall clear height	h1=2800 mm
Modulus of elasticity of wall	E1=4050 N/mm²

Masonry wall 2

Wall thickness	t2=140 mm
Wall height	h2=2800 mm
Modulus of elasticity of wall	E2=4050 N/mm²
2nd moment of area of wall	I2=228.67E6 mm⁴
compute	c2=330.75 kNm

Floor slab member 3

Slab thickness	t3=200 mm
Length of member 3	l3=5000 mm
Modulus of elasticity	E3=36000 N/mm²

Floor slab member 4

Slab thickness	t4=200 mm
Length of member 4	l4=6500 mm
Modulus of elasticity	E4=36000 N/mm²
Char permanent load on member 3	Gk3=4.3 kN/m²
Char variable load on member 3	Qk3=3.5 kN/m²
Char permanent load on member 4	Gk4=4.3 kN/m²
Char variable load on member 4	Qk4=3.5 kN/m²

DESIGN SUMMARY	**Wall clear height**	**2800 mm**
	Wall thickness	**140 mm**
	Design moment (top of wall)	**-0.25365 kNm/m**
	Design moment @ mid-height	**0.039929 kNm/m**
	Design moment (bot of wall)	**-0.33351 kNm/m**

Location: Wall panel 5

BS EN 1996-1-1:2005, Annex C, gives a simplified method for calculating the out-of-plane eccentricity of loading on masonry walls. The structure is simplified to a sub-frame for the evaluation of moments at the top and bottom of the wall.

Partial safety factors

Permanent actions	gamG=1.35
Variable actions	gamQ=1.5

Moment at the top of wall - (at node point A)

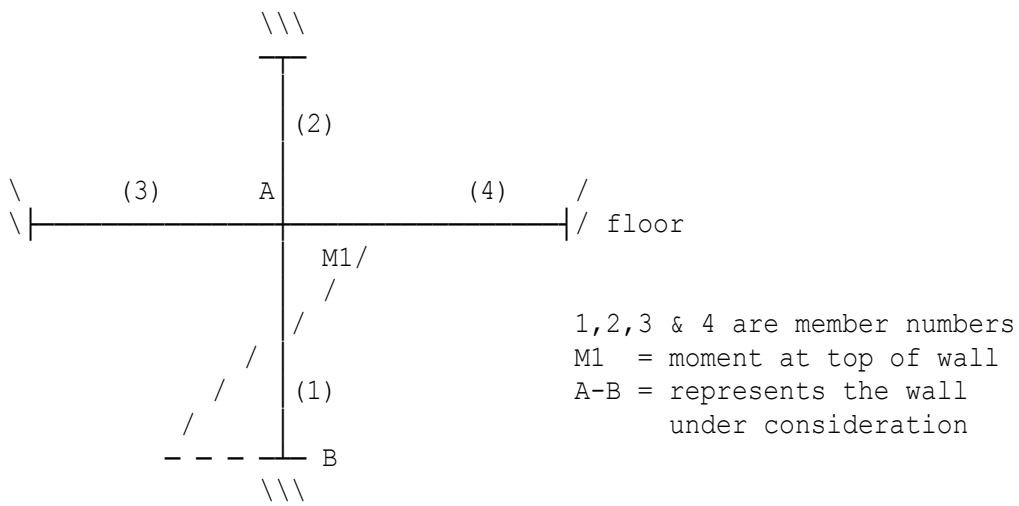

Masonry Wall 1

Wall thickness	t1'=140 mm
Wall clear height	h1'=2800 mm
Modulus of elasticity	E1'=4050 N/mm²

Masonry wall 2

Wall thickness	t2'=140 mm
Wall height	h2'=2800 mm
Modulus of elasticity of wall	E2'=4050 N/mm²
2nd moment of area of wall	I2'=1000*t2'^3/12=228.67E6 mm⁴
compute	c2=E2'*I2'/h2'*1E-6=330.75 kNm

Floor slab 3

Slab thickness	t3'=200 mm
Length of member 3	l3'=5000 mm
Modulus of elasticity	E3'=36000 N/mm²

Floor slab 4

Slab thickness	t4'=200 mm

Length of member 4	l4'=6500 mm
Modulus of elasticity	E4'=36000 N/mm²
Char permanent load on member 3	Gk3'=4.3 kN/m²
Char variable load on member 3	Qk3'=1.5 kN/m²
Char permanent load on member 4	Gk4'=4.3 kN/m²
Char variable load on member 4	Qk4'=1.5 kN/m²

Moment at the bottom of the wall - (at node point B)

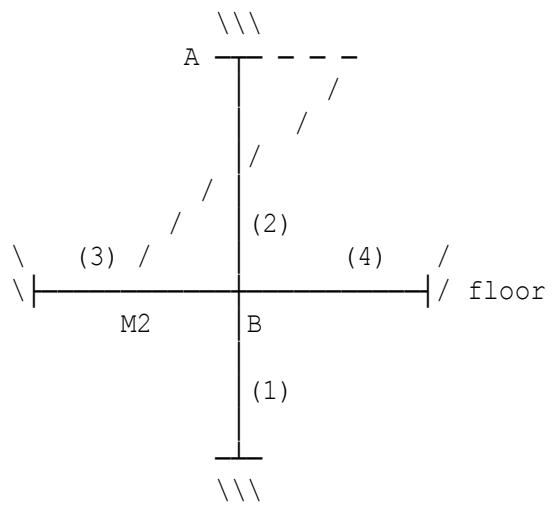

1, 2, 3 & 4 are member numbers
M2 = moment at bot of wall
A-B = represents the wall under consideration

Masonry wall 1

Wall thickness	t1=140 mm
Wall clear height	h1=3300 mm
Modulus of elasticity of wall	E1=4050 N/mm²

Masonry wall 2

Wall thickness	t2=140 mm
Wall height	h2=2800 mm
Modulus of elasticity of wall	E2=4050 N/mm²
2nd moment of area of wall	I2=228.67E6 mm⁴
compute	c2=330.75 kNm

Floor slab member 3

Slab thickness	t3=200 mm
Length of member 3	l3=5000 mm
Modulus of elasticity	E3=36000 N/mm²

Floor slab member 4

Slab thickness	t4=200 mm
Length of member 4	l4=6500 mm
Modulus of elasticity	E4=36000 N/mm²
Char permanent load on member 3	Gk3=4.3 kN/m²
char variable load on member 3	Qk3=3.5 kN/m²
Char permanent load on member 4	Gk4=4.3 kN/m²
Char variable load on member 4	Qk4=3.5 kN/m²

DESIGN SUMMARY	**Wall clear height**	**2800 mm**
	Wall thickness	**140 mm**
	Design moment (top of wall)	**-0.24301 kNm/m**
	Design moment @ mid-height	**0.04632 kNm/m**
	Design moment (bot of wall)	**-0.33565 kNm/m**

Location: Wall panel 4

BS EN 1996-1-1:2005, Annex C, gives a simplified method for calculating the out-of-plane eccentricity of loading on masonry walls. The structure is simplified to a sub-frame for the evaluation of moments at the top and bottom of the wall.

Partial safety factors

Permanent actions	gamG=1.35
Variable actions	gamQ=1.5

Moment at the top of wall - (at node point A)

```
                 \\\
                  ┬
                  │
                  │(2)
\      (3)     A  │        (4)        /
\├──────────────────────────────────┤/ floor
                  │ M1/
                  │  /
                  │/                 1,2,3 & 4 are member numbers
               /  │                  M1  = moment at top of wall
            /     │(1)               A-B = represents the wall
         /        │                       under consideration
      /           │
  - - - ═══ B  foundation
                 \\\
```

Masonry Wall 1

Wall thickness	t1'=140 mm
Wall clear height	h1'=3300 mm
Modulus of elasticity	E1'=4050 N/mm²

Masonry wall 2

Wall thickness	t2'=140 mm
Wall height	h2'=2800 mm
Modulus of elasticity of wall	E2'=4050 N/mm²
2nd moment of area of wall	I2'=1000*t2'^3/12=228.67E6 mm⁴
compute	c2=E2'*I2'/h2'*1E-6=330.75 kNm

Floor slab 3

Slab thickness	t3'=200 mm
Length of member 3	l3'=5000 mm
Modulus of elasticity	E3'=36000 N/mm²

Floor slab 4

Slab thickness	t4'=200 mm

Length of member 4	l4'=6500 mm
Modulus of elasticity	E4'=36000 N/mm²
Char permanent load on member 3	Gk3'=4.3 kN/m²
Char variable load on member 3	Qk3'=3.5 kN/m²
Char permanent load on member 4	Gk4'=4.3 kN/m²
Char variable load on member 4	Qk4'=3.5 kN/m²

Moment at the bottom of the wall - (at node point B)

```
              \\\
            A ──┬── - -     floor
                │     /
                │   /
                │ /                 (1) = member number
              / │                   M2  = moment at bot of wall
            /   │ (1)               A-B = represents the wall
          /     │                         under consideration
M2 - - - ═══ B  foundation
              \\\
```

DESIGN SUMMARY	**Wall clear height**	**3300 mm**
	Wall thickness	**140 mm**
	Design moment (top of wall)	**-0.28479 kNm/m**
	Design moment @ mid-height	**-0.071198 kNm/m**
	Design moment (bot of wall)	**-0.1424 kNm/m**

Location: Wall panel 1 Single storey structure

BS EN 1996-1-1:2005, Annex C, gives a simplified method for calculating the out-of-plane eccentricity of loading on masonry walls. The structure is simplified to a sub-frame for the evaluation of moments at the top and bottom of the wall.

Moment at the top of wall - (at node point A)

```
                (4)      /
  A ──────────────────┤/ floor
    │  M1 /
    │    /
    │   /              1 & 4 are member numbers
(1) │  /               M1  = moment at top of wall
    │ /                A-B = represents the wall
    │/                       under consideration
  ═══ B  foundation
  \\\
```

Masonry Wall 1

Wall thickness	t1'=140 mm
Wall clear height	h1'=3300 mm
Modulus of elasticity	E1'=4050 N/mm²

Floor slab 4

Slab thickness	t4'=200 mm
Length of member 4	l4'=6500 mm
Modulus of elasticity	E4'=36000 N/mm²
Char permanent load on member 4	Gk4'=4.3 kN/m²
Char variable load on member 4	Qk4'=1.5 kN/m²

Moment at the bottom of the wall - (at node point B)

```
  \\\
  ─┬─ - - -  floor
    │     /
    │    /
(1) │   /              (1) =  member number
    │  /               M2  = moment at bottom of wall
    │ /                A-B = represents the wall
    │/                       under consideration
  ═══ B  foundation
  \\\
```

DESIGN SUMMARY	**Wall clear height**	**3300 mm**
	Wall thickness	**140 mm**
	Design moment (top of wall)	**-1.1639 kNm/m**
	Design moment @ mid-height	**-0.58195 kNm/m**
	Design moment (bot of wall)	**0 kNm/m**

Location: Wall panel 2 Single storey structure

BS EN 1996-1-1:2005, Annex C, gives a simplified method for calculating the out-of-plane eccentricity of loading on masonry walls. The structure is simplified to a sub-frame for the evaluation of moments at the top and bottom of the wall.

Masonry and floor details

Mortar designation (Table NA.2) mortar=3
Masonry type (1=clay 2=cal silicate 3=conc brick 4=block) typ(1)=4
Compressive strength of units po=7.3 N/mm²
Constant K from NA Table NA.4 K(1)=0.75
Height of masonry unit hu=215 mm
Least horiz. dimension of units lhd=140 mm

Moment at the top of wall - (at node point A)

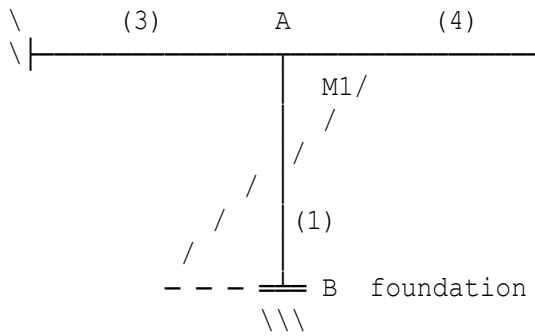

1,3 & 4 are member numbers
M1 = moment at top of wall
A-B = represents the wall under consideration

Masonry Wall 1

Wall thickness t1'=140 mm
Wall clear height h1'=3300 mm
Modulus of elasticity E1'=5492.4 N/mm²

Floor slab 3

Slab thickness t3'=200 mm
Length of member 3 l3'=5000 mm
Modulus of elasticity E3'=36000 N/mm²

Floor slab 4

Slab thickness t4'=200 mm
Length of member 4 l4'=6500 mm
Modulus of elasticity E4'=36000 N/mm²
Char permanent load on member 3 Gk3'=4.3 kN/m²
Char variable load on member 3 Qk3'=1.5 kN/m²
Char permanent load on member 4 Gk4'=4.3 kN/m²
Char variable load on member 4 Qk4'=1.5 kN/m²

Moment at the bottom of the wall - (at node point B)

```
\      (3)       A         (4)      /
\├──────────────────────────────┤/ floor
                  │     /
                  │   /
                  │/                1, 3 & 4 are member numbers
               /  │                 M2 = moment at bottom of wall
            /     │(1)              A-B = represents the wall
         /                                under consideration
      M2 - - - ═══ B  foundation
                \\\
```

DESIGN SUMMARY	**Wall clear height**	**3300 mm**
	Wall thickness	**140 mm**
	Design moment (top of wall)	**-0.28996 kNm/m**
	Design moment @ mid-height	**-0.07249 kNm/m**
	Design moment (bot of wall)	**-0.14498 kNm/m**

Location: Internal Partition A1

Wall restrained on three sides but not at the top.

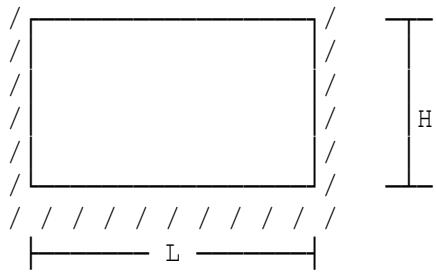

Masonry details

Length of wall panel	L=6 m
Height of wall panel	H=2 m
Effective wall thickness	t=200 mm

DESIGN SUMMARY	**Wall length**	**6 m**
	Wall height	**2 m**
	Wall effective thickness	**200 mm**

Location: Internal Partition A2

Wall restrained on three sides but not at the top.

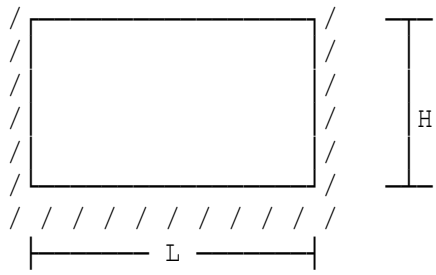

Masonry details

Length of wall panel	L=6 m
Height of wall panel	H=4 m
Effective wall thickness	t=200 mm

DESIGN SUMMARY	**Wall length**	**6 m**
	Wall height	**4 m**
	Wall effective thickness	**200 mm**

Location: Internal Partition A3

Wall restrained on three sides but not at the top.

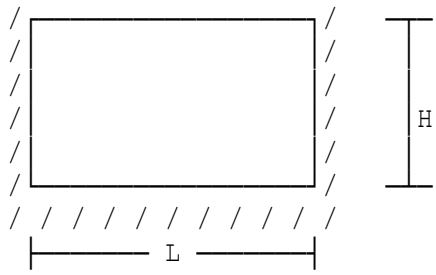

Masonry details

Length of wall panel	L=6 m
Height of wall panel	H=6 m
Effective wall thickness	t=140 mm

DESIGN SUMMARY	**Wall length**	**6 m**
	Wall height	**6 m**
	Wall effective thickness	**140 mm**

Location: Internal Partition B1

Wall restrained on four sides.

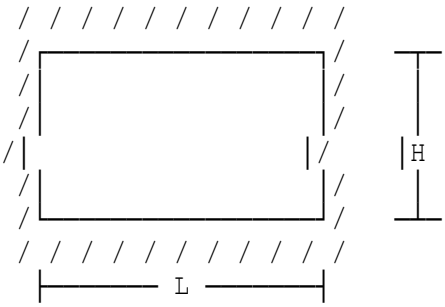

Masonry details

Length of wall panel	L=5 m
Height of wall panel	H=5 m
Effective wall thickness	t=140 mm

DESIGN SUMMARY	**Wall length**	**5 m**
	Wall height	**5 m**
	Wall effective thickness	**140 mm**

Location: Internal Partition B2

Wall restrained on four sides.

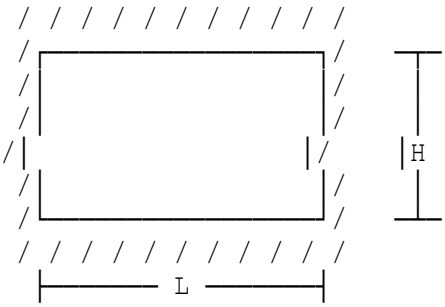

Masonry details

Length of wall panel	L=8 m
Height of wall panel	H=4 m
Effective wall thickness	t=200 mm

DESIGN SUMMARY	**Wall length**	**8 m**
	Wall height	**4 m**
	Wall effective thickness	**200 mm**

Location: Internal Partition B3

Wall restrained on four sides.

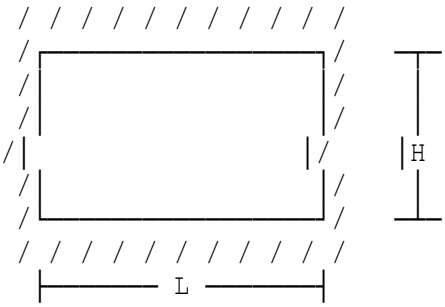

Masonry details

Length of wall panel	L=9 m
Height of wall panel	H=8 m
Effective wall thickness	t=200 mm

DESIGN SUMMARY	**Wall length**	**9 m**
	Wall height	**8 m**
	Wall effective thickness	**200 mm**

Location: Internal Partition C1

Wall restrained
at the top but
not at the ends.

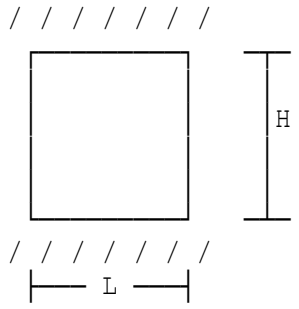

Masonry details

Length of wall panel	L=6 m
Height of wall panel	H=4.2 m
Effective wall thickness	t=140 mm

DESIGN SUMMARY	**Wall length**	**6 m**
	Wall height	**4.2 m**
	Wall effective thickness	**140 mm**

Location: Internal Partition A1

Wall restrained on three sides but not at the top.

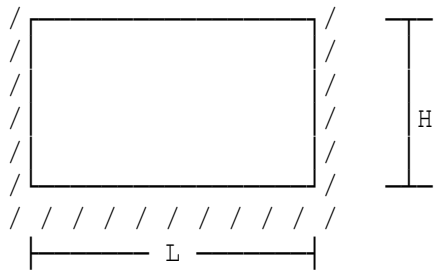

Length of wall panel	L=6 m
Height of wall panel	H=2 m
Effective wall thickness	t=200 mm

DESIGN SUMMARY	**Wall length**	**6 m**
	Wall height	**2 m**
	Wall effective thickness	**200 mm**

Location: Internal Partition A2

Wall restrained on three sides but not at the top.

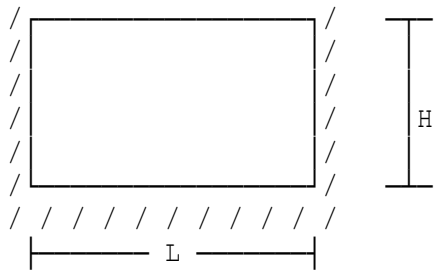

Length of wall panel	L=6 m
Height of wall panel	H=4 m
Effective wall thickness	t=200 mm

DESIGN SUMMARY	**Wall length**	**6 m**
	Wall height	**4 m**
	Wall effective thickness	**200 mm**

Location: Internal Partition A3

Wall restrained on three sides but not at the top.

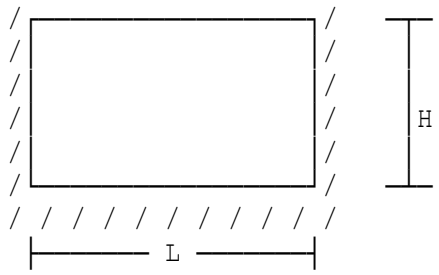

Length of wall panel	L=6 m
Height of wall panel	H=6 m
Effective wall thickness	t=140 mm

DESIGN SUMMARY	**Wall length**	**6 m**
	Wall height	**6 m**
	Wall effective thickness	**140 mm**

Location: Internal Partition B1

Wall restrained on four sides.

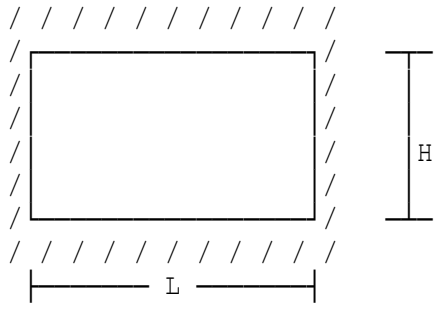

Length of wall panel	L=5 m
Height of wall panel	H=5 m
Effective wall thickness	t=140 mm

DESIGN SUMMARY	**Wall length**	**5 m**
	Wall height	**5 m**
	Wall effective thickness	**140 mm**

Location: Internal Partition B2

Wall restrained on four sides.

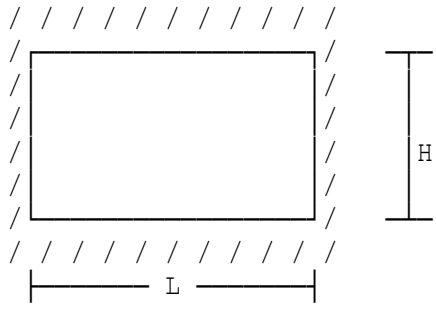

Length of wall panel	L=8 m
Height of wall panel	H=4 m
Effective wall thickness	t=200 mm

DESIGN SUMMARY	**Wall length**	**8 m**
	Wall height	**4 m**
	Wall effective thickness	**200 mm**

Location: Internal Partition B3

Wall restrained on four sides.

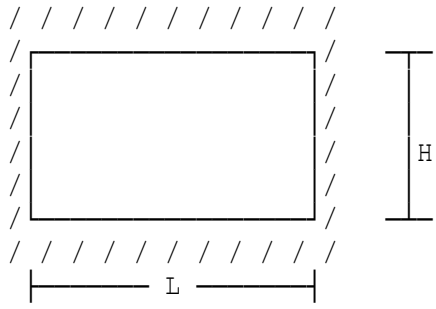

Length of wall panel	L=9 m
Height of wall panel	H=8 m
Effective wall thickness	t=200 mm

DESIGN SUMMARY	**Wall length**	**9 m**
	Wall height	**8 m**
	Wall effective thickness	**200 mm**

Location: Internal Partition C1

Wall restrained
at the top but
not at the ends.

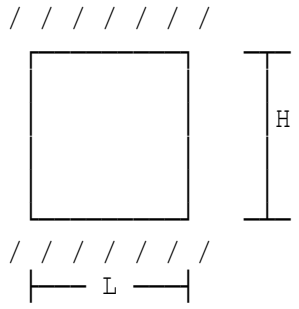

Length of wall panel	L=6 m
Height of wall panel	H=4.2 m
Effective wall thickness	t=140 mm

DESIGN SUMMARY	**Wall length**	**6 m**
	Wall height	**4.2 m**
	Wall effective thickness	**140 mm**

Location: Wall on grid line A/1-2

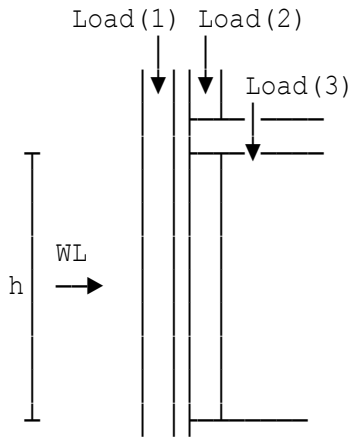

External cavity wall

This calculation is based on BS5628-1:2005, the Code of practice for use of masonry, Part 1: Structural use of unreinforced masonry.

WL = wind load

Thickness of outer leaf	t(1)=100 mm
Density of outer leaf	den(1)=12.4 kN/m³
Thickness of inner leaf	t(2)=140 mm
Density of inner leaf	den(2)=12.4 kN/m³
Clear height of wall	h=2.425 m
Support Restraint factor	rf=0.75
Length of wall panel	L=4 m
Mortar designation to Table 1	mortar=3
Partial Safety Factor Material	gammam=3.1
Masonry type (1=clay 2=cal silicate 3=conc brick 4=block)	typ(1)=1
Compressive Strength of Units	po(1)=21 N/mm²
Water absorption %age of leaf	water=9
Masonry type (1=clay 2=cal silicate 3=conc brick 4=block)	typ(2)=4
Compressive Strength of Units	po(2)=3.6 N/mm²
Height	hb(2)=215 mm
Least horizontal dimension	lhd(2)=140 mm
Dead load from upper levels	DL(1)=4 kN/m
Dead load from upper levels	DL(2)=7 kN/m
Live load from upper levels	LL(2)=5.5 kN/m
Dead load from supported floor	DL(3)=12 kN/m
Live load from supported floor	LL(3)=5 kN/m
Ecc of floor load on inner leaf	ecc=23.333 mm
Horizontal wind load	WL=0.62 kN/m²

Vertical load capacity

For an external cavity wall it is only necessary to check the inner leaf which carries the majority of load.

At top of Wall:

Case 1: Max load from above 1.4DL + 1.6LL

Design vertical load g=1.4*(DL(2)+DL(3))+1.6*(LL(2)
+LL(3))=43.4 kN/m
Design vert. load resist of wall gd=beta*(t(2)/1000)*(fk(2)*1000)
/gammam=115.34 kN/m
Since g ≤ gd (43.4 kN/m ≤ 115.34 kN/m) design vertical load within vertical load resistance of wall, therefore OK.

Case 2: Min load from above 0.9DL + 1.6LL

Design vertical load g=0.9*DL(2)+1.4*DL(3)+1.6*(LL(2)
+LL(3))=39.9 kN/m
Design vert. load resist of wall gd=beta*(t(2)/1000)*(fk(2)*1000)
/gammam=113.47 kN/m
Since g ≤ gd (39.9 kN/m ≤ 113.47 kN/m) design vertical load within vertical load resistance of wall, therefore OK.

Lateral load capacity

Select Case(b) of Clause 18 of the Code: 0.9DL+1.4WL
Design moment (simple supports) M=1.4*WL*h^2/8=0.63805 kNm/m
Moment reduction factor mrf=1
Elastic design moment M=M/mrf=0.63805 kNm/m
Since M ≤ Mr (0.63805 kNm/m ≤ 0.97615 kNm/m) elastic design moment within design moment of resistance, therefore OK.

DESIGN SUMMARY	**Wall height**	**2.425 m**
OUTER LEAF	**Thickness**	**100 mm**
	Char. flex strength	**0.4 N/mm²**
	Char. comp strength	**5.13 N/mm²**
INNER LEAF	**Thickness**	**140 mm**
	Char flex strength	**0.22333 N/mm²**
	Char. comp strength	**2.9031 N/mm²**
	Effective wall thickness	**160 mm**
	Effective wall height	**1.8188 m**
	Slenderness ratio	**11.367**
	Max vertical design load	**43.4 kN**
	Vertical load resistance	**115.34 kN**
	Vertical load (max ecc)	**39.9 kN**
	Vertical load resistance	**113.47 kN**
	Wind pressure	**0.62 kN/m²**
	Elastic design moment	**0.63805 kNm**
	Moment of resistance	**0.97615 kNm**

Location: Wall on grid line A/1-2

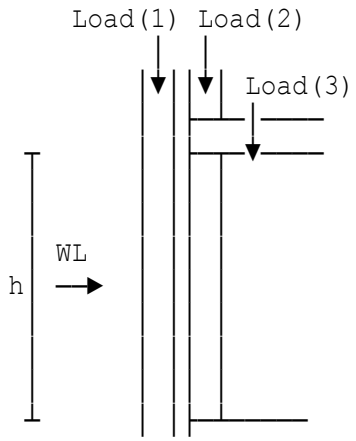

External cavity wall

This calculation is based on BS5628-1:2005, the Code of practice for use of masonry, Part 1: Structural use of unreinforced masonry.

WL = wind load

Thickness of outer leaf t(1)=100 mm
Density of outer leaf den(1)=12.4 kN/m³
Thickness of inner leaf t(2)=140 mm
Density of inner leaf den(2)=12.4 kN/m³
Clear height of wall h=2.425 m
Support Restraint factor rf=0.75
Length of wall panel L=4 m
Mortar designation to Table 1 mortar=3
Partial Safety Factor Material gammam=3.1
Masonry type (1=clay 2=cal silicate 3=conc brick 4=block) typ(1)=2
Compressive Strength of Units po(1)=60 N/mm²
Masonry type (1=clay 2=cal silicate 3=conc brick 4=block) typ(2)=3
Compressive Strength of Units po(2)=5.2 N/mm²
Dead load from upper levels DL(1)=4 kN/m

Dead load from upper levels DL(2)=5 kN/m
Live load from upper levels LL(2)=5.5 kN/m
Dead load from supported floor DL(3)=10 kN/m
Live load from supported floor LL(3)=5 kN/m
Ecc of floor load on inner leaf ecc=23.333 mm
Horizontal wind load WL=0.63 kN/m²

Vertical load capacity

For an external cavity wall it is only necessary to check the inner leaf which carries the majority of load.

At top of Wall:

Case 1: Max load from above 1.4DL + 1.6LL

Design vertical load g=1.4*(DL(2)+DL(3))+1.6*(LL(2)
+LL(3))=37.8 kN/m
Design vert. load resist of wall gd=beta*(t(2)/1000)*(fk(2)*1000)
/gammam=99.054 kN/m
Since g ≤ gd (37.8 kN/m ≤ 99.054 kN/m) design vertical load within vertical load resistance of wall, therefore OK.

Case 2: Min load from above 0.9DL + 1.6LL

Design vertical load g=0.9*DL(2)+1.4*DL(3)+1.6*(LL(2) +LL(3))=35.3 kN/m
Design vert. load resist of wall gd=beta*(t(2)/1000)*(fk(2)*1000) /gammam=97.652 kN/m
Since g ≤ gd (35.3 kN/m ≤ 97.652 kN/m) design vertical load within vertical load resistance of wall, therefore OK.

Lateral load capacity

Select Case(b) of Clause 18 of the Code: 0.9DL+1.4WL
Design moment (simple supports) M=1.4*WL*h^2/8=0.64834 kNm/m
Moment reduction factor mrf=1.5
Elastic design moment M=M/mrf=0.43223 kNm/m
Since M ≤ Mr (0.43223 kNm/m ≤ 0.85242 kNm/m) elastic design moment within design moment of resistance, therefore OK.

DESIGN SUMMARY	**Wall height**	**2.425 m**
OUTER LEAF	**Thickness**	**100 mm**
	Char. flex strength	**0.3 N/mm²**
	Char. comp strength	**9.24 N/mm²**
INNER LEAF	**Thickness**	**140 mm**
	Char flex strength	**0.3 N/mm²**
	Char. comp strength	**2.5 N/mm²**
	Effective wall thickness	**160 mm**
	Effective wall height	**1.8188 m**
	Slenderness ratio	**11.367**
	Max vertical design load	**37.8 kN**
	Vertical load resistance	**99.054 kN**
	Vertical load (max ecc)	**35.3 kN**
	Vertical load resistance	**97.652 kN**
	Wind pressure	**0.63 kN/m²**
	Elastic design moment	**0.43223 kNm**
	Moment of resistance	**0.85242 kNm**

Location: Wall on grid line A/1-2

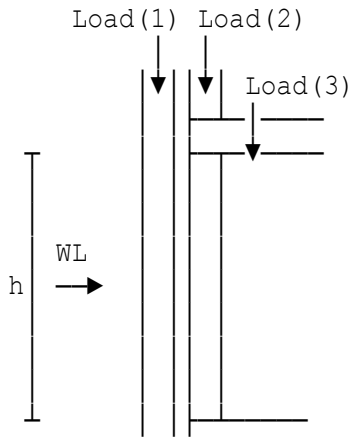

External cavity wall

This calculation is based on BS5628-1:2005, the Code of practice for use of masonry, Part 1: Structural use of unreinforced masonry.

WL = wind load

Thickness of outer leaf	t(1)=100 mm
Density of outer leaf	den(1)=12.4 kN/m³
Thickness of inner leaf	t(2)=140 mm
Density of inner leaf	den(2)=12.4 kN/m³
Clear height of wall	h=4.25 m
Support Restraint factor	rf=0.75
Length of wall panel	L=4 m
Mortar designation to Table 1	mortar=3
Partial Safety Factor Material	gammam=3.1
Masonry type (1=clay 2=cal silicate 3=conc brick 4=block)	typ(1)=1
Compressive Strength of Units	po(1)=20 N/mm²
Water absorption %age of leaf	water=9
Masonry type (1=clay 2=cal silicate 3=conc brick 4=block)	typ(2)=4
Compressive Strength of Units	po(2)=22.5 N/mm²
Height	hb(2)=215 mm
Least horizontal dimension	lhd(2)=140 mm
Dead load from upper levels	DL(1)=4 kN/m
Dead load from upper levels	DL(2)=7 kN/m
Live load from upper levels	LL(2)=5.5 kN/m
Dead load from supported floor	DL(3)=12 kN/m
Live load from supported floor	LL(3)=5 kN/m
Ecc of floor load on inner leaf	ecc=23.333 mm
Horizontal wind load	WL=0.25 kN/m²

Vertical load capacity

For an external cavity wall it is only necessary to check the inner leaf which carries the majority of load.

At top of Wall:

Case 1: Max load from above 1.4DL + 1.6LL

Design vertical load g=1.4*(DL(2)+DL(3))+1.6*(LL(2)
+LL(3))=43.4 kN/m
Design vert. load resist of wall gd=beta*(t(2)/1000)*(fk(2)*1000)
/gammam=292.99 kN/m
Since g ≤ gd (43.4 kN/m ≤ 292.99 kN/m) design vertical load within vertical load resistance of wall, therefore OK.

Case 2: Min load from above 0.9DL + 1.6LL

Design vertical load g=0.9*DL(2)+1.4*DL(3)+1.6*(LL(2)
+LL(3))=39.9 kN/m
Design vert. load resist of wall gd=beta*(t(2)/1000)*(fk(2)*1000)
/gammam=288.28 kN/m
Since g ≤ gd (39.9 kN/m ≤ 288.28 kN/m) design vertical load within vertical load resistance of wall, therefore OK.

Lateral load capacity

Select Case(b) of Clause 18 of the Code: 0.9DL+1.4WL
Design moment (simple supports) M=1.4*WL*h^2/8=0.79023 kNm/m
Moment reduction factor mrf=1
Elastic design moment M=M/mrf=0.79023 kNm/m
Since M ≤ Mr (0.79023 kNm/m ≤ 1.1715 kNm/m) elastic design moment within design moment of resistance, therefore OK.

DESIGN SUMMARY	**Wall height**	**4.25 m**
OUTER LEAF	**Thickness**	**100 mm**
	Char. flex strength	**0.4 N/mm²**
	Char. comp strength	**5 N/mm²**
INNER LEAF	**Thickness**	**140 mm**
	Char flex strength	**0.25 N/mm²**
	Char. comp strength	**10.01 N/mm²**
	Effective wall thickness	**160 mm**
	Effective wall height	**3.1875 m**
	Slenderness ratio	**19.922**
	Max vertical design load	**43.4 kN**
	Vertical load resistance	**292.99 kN**
	Vertical load (max ecc)	**39.9 kN**
	Vertical load resistance	**288.28 kN**
	Wind pressure	**0.25 kN/m²**
	Elastic design moment	**0.79023 kNm**
	Moment of resistance	**1.1715 kNm**

Location: Wall on grid line A/1-2

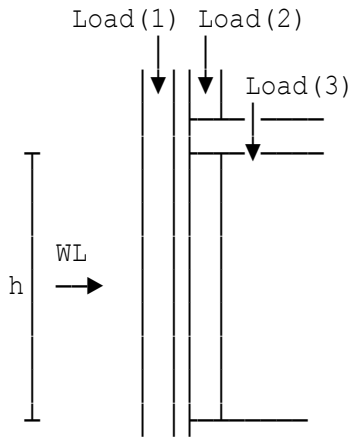

External cavity wall

This calculation is based on BS5628-1:2005, the Code of practice for use of masonry, Part 1: Structural use of unreinforced masonry.

WL = wind load

Thickness of outer leaf	t(1)=102 mm
Density of outer leaf	den(1)=22 kN/m³
Thickness of inner leaf	t(2)=102 mm
Density of inner leaf	den(2)=22 kN/m³
Clear height of wall	h=2.425 m
Support Restraint factor	rf=0.75
Length of wall panel	L=4 m
Mortar designation to Table 1	mortar=3
Partial Safety Factor Material	gammam=3.1
Masonry type (1=clay 2=cal silicate 3=conc brick 4=block)	typ(1)=1
Compressive Strength of Units	po(1)=20 N/mm²
Water absorption %age of leaf	water=9
Masonry type (1=clay 2=cal silicate 3=conc brick 4=block)	typ(2)=1
Compressive Strength of Units	po(2)=30 N/mm²
Water absorption %age of leaf	water=9
Dead load from upper levels	DL(1)=4 kN/m
Dead load from upper levels	DL(2)=7 kN/m
Live load from upper levels	LL(2)=5.5 kN/m
Dead load from supported floor	DL(3)=12 kN/m
Live load from supported floor	LL(3)=5 kN/m
Ecc of floor load on inner leaf	ecc=17 mm
Horizontal wind load	WL=0.63 kN/m²

Vertical load capacity

For an external cavity wall it is only necessary to check the inner leaf which carries the majority of load.

At top of Wall:

Case 1: Max load from above 1.4DL + 1.6LL

Design vertical load g=1.4*(DL(2)+DL(3))+1.6*(LL(2)
+LL(3))=43.4 kN/m
Design vert. load resist of wall gd=beta*(t(2)/1000)*(fk(2)*1000)
/gammam=175.83 kN/m
Since g ≤ gd (43.4 kN/m ≤ 175.83 kN/m) design vertical load within vertical load resistance of wall, therefore OK.

Case 2: Min load from above 0.9DL + 1.6LL

Design vertical load g=0.9*DL(2)+1.4*DL(3)+1.6*(LL(2)
+LL(3))=39.9 kN/m
Design vert. load resist of wall gd=beta*(t(2)/1000)*(fk(2)*1000)
/gammam=173.29 kN/m
Since g ≤ gd (39.9 kN/m ≤ 173.29 kN/m) design vertical load within vertical load resistance of wall, therefore OK.

Lateral load capacity

Select Case(b) of Clause 18 of the Code: 0.9DL+1.4WL
Design moment (simple supports) M=1.4*WL*h^2/8=0.64834 kNm/m
Moment reduction factor mrf=1
Elastic design moment M=M/mrf=0.64834 kNm/m
Since M ≤ Mr (0.64834 kNm/m ≤ 0.88264 kNm/m) elastic design moment within design moment of resistance, therefore OK.

DESIGN SUMMARY	**Wall height**	**2.425 m**
OUTER LEAF	**Thickness**	**102 mm**
	Char. flex strength	**0.4 N/mm²**
	Char. comp strength	**5 N/mm²**
INNER LEAF	**Thickness**	**102 mm**
	Char flex strength	**0.4 N/mm²**
	Char. comp strength	**6.3 N/mm²**
	Effective wall thickness	**136 mm**
	Effective wall height	**1.8188 m**
	Slenderness ratio	**13.373**
	Max vertical design load	**43.4 kN**
	Vertical load resistance	**175.83 kN**
	Vertical load (max ecc)	**39.9 kN**
	Vertical load resistance	**173.29 kN**
	Wind pressure	**0.63 kN/m²**
	Elastic design moment	**0.64834 kNm**
	Moment of resistance	**0.88264 kNm**

Location: Example 5 (reference V6 by JR)

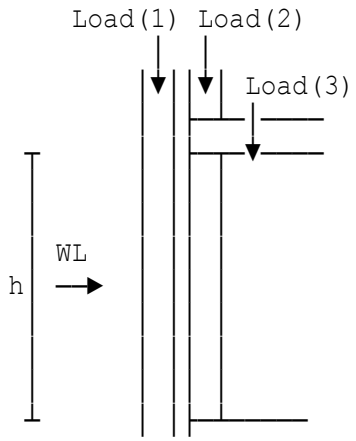

External cavity wall

This calculation is based on BS5628-1:2005, the Code of practice for use of masonry, Part 1: Structural use of unreinforced masonry.

WL = wind load

Thickness of outer leaf	t(1)=102.5 mm
Density of outer leaf	den(1)=20 kN/m³
Thickness of inner leaf	t(2)=140 mm
Density of inner leaf	den(2)=20 kN/m³
Clear height of wall	h=3 m
Support Restraint factor	rf=0.75
Length of wall panel	L=4 m
Mortar designation to Table 1	mortar=3
Partial Safety Factor Material	gammam=3.1
Masonry type (1=clay 2=cal silicate 3=conc brick 4=block)	typ(1)=1
Compressive Strength of Units	po(1)=20 N/mm²
Water absorption %age of leaf	water=12
Masonry type (1=clay 2=cal silicate 3=conc brick 4=block)	typ(2)=4
Compressive Strength of Units	po(2)=7.3 N/mm²
Height	hb(2)=215 mm
Least horizontal dimension	lhd(2)=140 mm
Dead load from upper levels	DL(1)=10 kN/m
Dead load from upper levels	DL(2)=88.889 kN/m
Live load from upper levels	LL(2)=0 kN/m
Dead load from supported floor	DL(3)=7.4074 kN/m
Live load from supported floor	LL(3)=0 kN/m
Ecc of floor load on inner leaf	ecc=23.333 mm
Horizontal wind load	WL=0.66667 kN/m²

Vertical load capacity

For an external cavity wall it is only necessary to check the inner leaf which carries the majority of load.

At top of Wall:

Case 1: Max load from above 1.4DL + 1.6LL

Design vertical load g=1.4*(DL(2)+DL(3))+1.6*(LL(2)+LL(3))=134.81 kN/m
Design vert. load resist of wall gd=beta*(t(2)/1000)*(fk(2)*1000)/gammam=214.98 kN/m
Since g ≤ gd (134.81 kN/m ≤ 214.98 kN/m) design vertical load within vertical load resistance of wall, therefore OK.

Case 2: Min load from above 0.9DL + 1.6LL

Design vertical load g=0.9*DL(2)+1.4*DL(3)+1.6*(LL(2)+LL(3))=90.37 kN/m
Design vert. load resist of wall gd=beta*(t(2)/1000)*(fk(2)*1000)/gammam=214.98 kN/m
Since g ≤ gd (90.37 kN/m ≤ 214.98 kN/m) design vertical load within vertical load resistance of wall, therefore OK.

Lateral load capacity

Select Case(b) of Clause 18 of the Code: 0.9DL+1.4WL
Design moment (simple supports) M=1.4*WL*h^2/8=1.05 kNm/m
Moment reduction factor mrf=1.5
Elastic design moment M=M/mrf=0.7 kNm/m
Since M ≤ Mr (0.7 kNm/m ≤ 2.7727 kNm/m) elastic design moment within design moment of resistance, therefore OK.

DESIGN SUMMARY	**Wall height**	**3 m**
OUTER LEAF	**Thickness**	**102.5 mm**
	Char. flex strength	**0.4 N/mm²**
	Char. comp strength	**5 N/mm²**
INNER LEAF	**Thickness**	**140 mm**
	Char flex strength	**0.22333 N/mm²**
	Char. comp strength	**5.3388 N/mm²**
	Effective wall thickness	**161.67 mm**
	Effective wall height	**2.25 m**
	Slenderness ratio	**13.918**
	Max vertical design load	**134.81 kN**
	Vertical load resistance	**214.98 kN**
	Vertical load (max ecc)	**90.37 kN**
	Vertical load resistance	**214.98 kN**
	Wind pressure	**0.66667 kN/m²**
	Elastic design moment	**0.7 kNm**
	Moment of resistance	**2.7727 kNm**

Location: Wall on grid line A/1-2

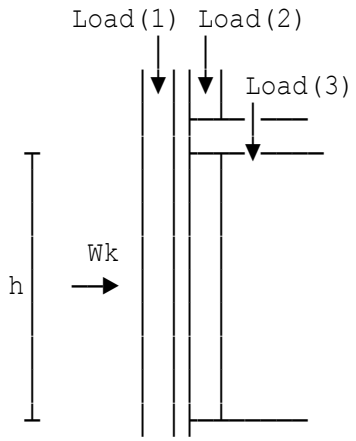

External cavity wall

This calculation is in accordance with EC6, the structural Eurocode for design of masonry structures Part 1-1:2005 General rules for reinforced & unreinforced masonry structures.

Wk = wind load or wind suction

Thickness of outer leaf	t(1)=100 mm
Density of outer leaf	den(1)=12.4 kN/m³
Thickness of inner leaf	t(2)=140 mm
Density of inner leaf	den(2)=12.4 kN/m³
between lateral restraints	h=2.425 m
Support restraint factor	rf=0.75
Length of wall panel	L=4 m
Mortar designation (Table NA.2)	mortar=3
Material partial safety factor	gamM=3
Masonry type (1=clay 2=cal silicate 3=conc brick 4=block)	typ(1)=1
Compressive strength of units	po(1)=21 N/mm²
Water absorption %age of leaf	water=9
Constant K from NA Table NA.4	K(1)=0.5
Height of masonry unit	hu(1)=65 mm
Least horiz. dimension of units	lhd(1)=100 mm
Masonry type (1=clay 2=cal silicate 3=conc brick 4=block)	typ(2)=4
Compressive strength of units	po(2)=3.6 N/mm²
Constant K from NA Table NA.4	K(2)=0.55
Height of masonry unit	hu(2)=215 mm
Least horiz. dimension of units	lhd(2)=140 mm
Permanent load from upper levels	Gk(1)=4 kN/m
Permanent load from upper levels	Gk(2)=7 kN/m
Variable load from upper levels	Qk(2)=5.5 kN/m
Permanent load from floor	Gk(3)=12 kN/m
Variable load from floor	Qk(3)=5 kN/m
Ecc of floor loads on inner leaf	ecc=23.333 mm
Char. horizontal wind load	Wk=0.62 kN/m²
Perm actions (upper levels)	gamG2=1.35
Perm actions (floor)	gamG3=1.35
Variable actions (vertical load)	gamQ=1.5
Variable actions (horiz.wind)	gamQw=0.75

Design moment at mid-height Mmd=0.61938 kNm/m

DESIGN SUMMARY	**Wall height**	**2.425 m**
OUTER LEAF	**Thickness**	**100 mm**
	Char. flexural strength	**0.4 N/mm²**
	Char. compressive strength	**5.6982 N/mm²**
INNER LEAF	**Thickness**	**140 mm**
	Char flexural strength	**0.22333 N/mm²**
	Char. compressive strength	**2.4556 N/mm²**
	Effective wall thickness	**155.2 mm**
	Effective wall height	**1.8188 m**
	Slenderness ratio	**11.719**
	Design vertical load	**44.242 kN**
	Design vert load resistance	**60.473 kN**
	Char. horizontal wind load	**0.62 kN/m²**

Outer leaf - use Group 1 units (i.e. solid)
Inner leaf - use Group 1 units (i.e. solid)

Location: Wall on grid line A/1-2

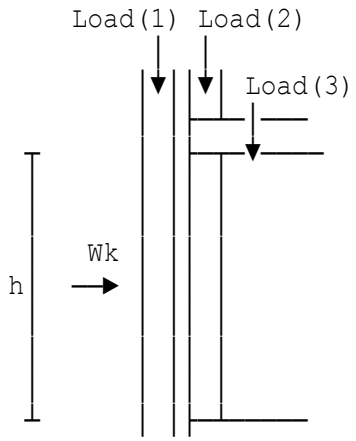

External cavity wall

This calculation is in accordance with EC6, the structural Eurocode for design of masonry structures Part 1-1:2005 General rules for reinforced & unreinforced masonry structures.

Wk = wind load or wind suction

Thickness of outer leaf	t(1)=100 mm
Density of outer leaf	den(1)=12.4 kN/m³
Thickness of inner leaf	t(2)=140 mm
Density of inner leaf	den(2)=12.4 kN/m³
between lateral restraints	h=2.425 m
Support restraint factor	rf=0.75
Length of wall panel	L=4 m
Mortar designation (Table NA.2)	mortar=3
Material partial safety factor	gamM=3
Masonry type (1=clay 2=cal silicate 3=conc brick 4=block)	typ(1)=2
Compressive strength of units	po(1)=60 N/mm²
Constant K from NA Table NA.4	K(1)=0.5
Height of masonry unit	hu(1)=65 mm
Least horiz. dimension of units	lhd(1)=100 mm
Masonry type (1=clay 2=cal silicate 3=conc brick 4=block)	typ(2)=3
Compressive strength of units	po(2)=5.2 N/mm²
Constant K from NA Table NA.4	K(2)=0.75
Height of masonry unit	hu(2)=65 mm
Least horiz. dimension of units	lhd(2)=100 mm
Permanent load from upper levels	Gk(1)=4 kN/m
Permanent load from upper levels	Gk(2)=5 kN/m
Variable load from upper levels	Qk(2)=5.5 kN/m
Permanent load from floor	Gk(3)=10 kN/m
Variable load from floor	Qk(3)=5 kN/m
Ecc of floor loads on inner leaf	ecc=23.333 mm
Char. horizontal wind load	Wk=0.63 kN/m²
Perm actions (upper levels)	gamG2=1.35
Perm actions (floor)	gamG3=1.35
Variable actions (vertical load)	gamQ=1.5
Variable actions (horiz.wind)	gamQw=0.75

Design moment at mid-height Mmd=0 kNm/m

DESIGN SUMMARY	**Wall height**	**2.425 m**
OUTER LEAF	**Thickness**	**100 mm**
	Char. flexural strength	**0.3 N/mm²**
	Char. compressive strength	**11.882 N/mm²**
INNER LEAF	**Thickness**	**140 mm**
	Char flexural strength	**0.3 N/mm²**
	Char. compressive strength	**3.2172 N/mm²**
	Effective wall thickness	**155.2 mm**
	Effective wall height	**1.8188 m**
	Slenderness ratio	**11.719**
	Design vertical load	**38.842 kN**
	Design vert load resistance	**98.479 kN**
	Char. horizontal wind load	**0.63 kN/m²**

Outer leaf - use Group 1 units (i.e. solid)
Inner leaf - use Group 1 units (i.e. solid)

Location: Wall on grid line A/1-2

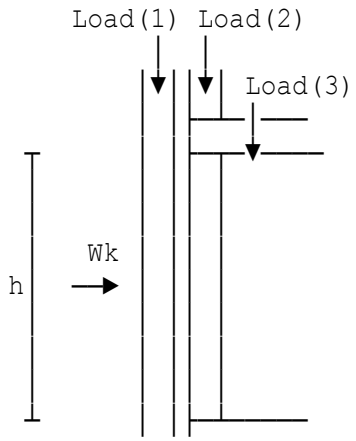

External cavity wall

This calculation is in accordance with EC6, the structural Eurocode for design of masonry structures Part 1-1:2005 General rules for reinforced & unreinforced masonry structures.

Wk = wind load or wind suction

Thickness of outer leaf	t(1)=100 mm
Density of outer leaf	den(1)=12.4 kN/m³
Thickness of inner leaf	t(2)=140 mm
Density of inner leaf	den(2)=12.4 kN/m³
between lateral restraints	h=4.25 m
Support restraint factor	rf=0.75
Length of wall panel	L=4 m
Mortar designation (Table NA.2)	mortar=3
Material partial safety factor	gamM=3
Masonry type (1=clay 2=cal silicate 3=conc brick 4=block)	typ(1)=1
Compressive strength of units	po(1)=20 N/mm²
Water absorption %age of leaf	water=9
Constant K from NA Table NA.4	K(1)=0.5
Height of masonry unit	hu(1)=65 mm
Least horiz. dimension of units	lhd(1)=100 mm
Masonry type (1=clay 2=cal silicate 3=conc brick 4=block)	typ(2)=4
Compressive strength of units	po(2)=22.5 N/mm²
Constant K from NA Table NA.4	K(2)=0.75
Height of masonry unit	hu(2)=215 mm
Least horiz. dimension of units	lhd(2)=140 mm
Permanent load from upper levels	Gk(1)=4 kN/m
Permanent load from upper levels	Gk(2)=7 kN/m
Variable load from upper levels	Qk(2)=5.5 kN/m
Permanent load from floor	Gk(3)=12 kN/m
Variable load from floor	Qk(3)=5 kN/m
Ecc of floor loads on inner leaf	ecc=23.333 mm
Char. horizontal wind load	Wk=0.25 kN/m²
Perm actions (upper levels)	gamG2=1.35
Perm actions (floor)	gamG3=1.35
Variable actions (vertical load)	gamQ=1.5
Variable actions (horiz.wind)	gamQw=0.75

Design moment at mid-height Mmd=0.64931 kNm/m

DESIGN SUMMARY	**Wall height**	**4.25 m**
OUTER LEAF	**Thickness**	**100 mm**
	Char. flexural strength	**0.4 N/mm²**
	Char. compressive strength	**5.5068 N/mm²**
INNER LEAF	**Thickness**	**140 mm**
	Char flexural strength	**0.25 N/mm²**
	Char. compressive strength	**12.077 N/mm²**
	Effective wall thickness	**155.2 mm**
	Effective wall height	**3.1875 m**
	Slenderness ratio	**20.538**
	Design vertical load	**46.38 kN**
	Design vert load resistance	**149.52 kN**
	Char. horizontal wind load	**0.25 kN/m²**

Outer leaf - use Group 1 units (i.e. solid)
Inner leaf - use Group 1 units (i.e. solid)

Location: Wall on grid line A/1-2

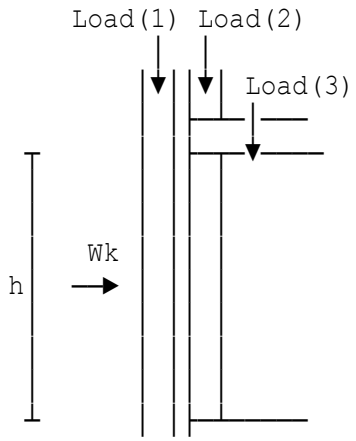

External cavity wall

This calculation is in accordance with EC6, the structural Eurocode for design of masonry structures Part 1-1:2005 General rules for reinforced & unreinforced masonry structures.

Wk = wind load or wind suction

Thickness of outer leaf	t(1)=102 mm
Density of outer leaf	den(1)=22 kN/m³
Thickness of inner leaf	t(2)=102 mm
Density of inner leaf	den(2)=22 kN/m³
between lateral restraints	h=2.425 m
Support restraint factor	rf=0.75
Length of wall panel	L=4 m
Mortar designation (Table NA.2)	mortar=3
Material partial safety factor	gamM=3
Masonry type (1=clay 2=cal silicate 3=conc brick 4=block)	typ(1)=1
Compressive strength of units	po(1)=20 N/mm²
Water absorption %age of leaf	water=9
Constant K from NA Table NA.4	K(1)=0.5
Height of masonry unit	hu(1)=65 mm
Least horiz. dimension of units	lhd(1)=100 mm
Masonry type (1=clay 2=cal silicate 3=conc brick 4=block)	typ(2)=1
Compressive strength of units	po(2)=30 N/mm²
Water absorption %age of leaf	water=9
Constant K from NA Table NA.4	K(2)=0.5
Height of masonry unit	hu(2)=65 mm
Least horiz. dimension of units	lhd(2)=100 mm
Permanent load from upper levels	Gk(1)=4 kN/m
Permanent load from upper levels	Gk(2)=7 kN/m
Variable load from upper levels	Qk(2)=5.5 kN/m
Permanent load from floor	Gk(3)=12 kN/m
Variable load from floor	Qk(3)=5 kN/m
Ecc of floor loads on inner leaf	ecc=17 mm
Char. horizontal wind load	Wk=0.63 kN/m²
Perm actions (upper levels)	gamG2=1.35
Perm actions (floor)	gamG3=1.35
Variable actions (vertical load)	gamQ=1.5
Variable actions (horiz.wind)	gamQw=0.75

Design moment at mid-height Mmd=0.45974 kNm/m

DESIGN SUMMARY	**Wall height**	**2.425 m**
OUTER LEAF	**Thickness**	**102 mm**
	Char. flexural strength	**0.4 N/mm²**
	Char. compressive strength	**5.5068 N/mm²**
INNER LEAF	**Thickness**	**102 mm**
	Char flexural strength	**0.4 N/mm²**
	Char. compressive strength	**7.3142 N/mm²**
	Effective wall thickness	**128.45 mm**
	Effective wall height	**1.8188 m**
	Slenderness ratio	**14.159**
	Design vertical load	**45.073 kN**
	Design vert load resistance	**102.17 kN**
	Char. horizontal wind load	**0.63 kN/m²**

Outer leaf - use Group 1 units (i.e. solid)
Inner leaf - use Group 1 units (i.e. solid)

Location: Example 5 (reference V6 by JR)

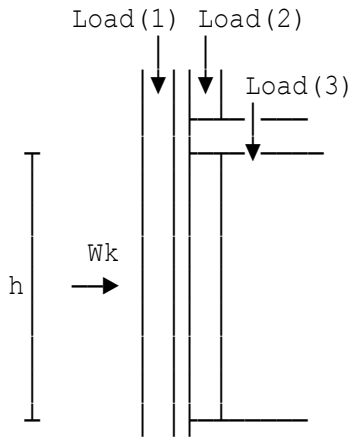

External cavity wall

This calculation is in accordance with EC6, the structural Eurocode for design of masonry structures Part 1-1:2005 General rules for reinforced & unreinforced masonry structures.

Wk = wind load or wind suction

Thickness of outer leaf	t(1)=102.5 mm
Density of outer leaf	den(1)=20 kN/m³
Thickness of inner leaf	t(2)=140 mm
Density of inner leaf	den(2)=20 kN/m³
between lateral restraints	h=3 m
Support restraint factor	rf=0.75
Length of wall panel	L=4 m
Mortar designation (Table NA.2)	mortar=3
Material partial safety factor	gamM=2.3
Masonry type (1=clay 2=cal silicate 3=conc brick 4=block)	typ(1)=1
Compressive strength of units	po(1)=20 N/mm²
Water absorption %age of leaf	water=12
Constant K from NA Table NA.4	K(1)=0.5
Height of masonry unit	hu(1)=65 mm
Least horiz. dimension of units	lhd(1)=100 mm
Masonry type (1=clay 2=cal silicate 3=conc brick 4=block)	typ(2)=4
Compressive strength of units	po(2)=7.3 N/mm²
Constant K from NA Table NA.4	K(2)=0.75
Height of masonry unit	hu(2)=215 mm
Least horiz. dimension of units	lhd(2)=140 mm
Permanent load from upper levels	Gk(1)=10 kN/m
Permanent load from upper levels	Gk(2)=88.889 kN/m
Variable load from upper levels	Qk(2)=0 kN/m
Permanent load from floor	Gk(3)=7.4074 kN/m
Variable load from floor	Qk(3)=0 kN/m
Ecc of floor loads on inner leaf	ecc=23.333 mm
Char. horizontal wind load	Wk=0.66667 kN/m²
Perm actions (upper levels)	gamG2=1.35
Perm actions (floor)	gamG3=1.35
Variable actions (vertical load)	gamQ=1.5
Variable actions (horiz.wind)	gamQw=0.75

Design moment at mid-height Mmd=0 kNm/m

DESIGN SUMMARY	**Wall height**	**3 m**
OUTER LEAF	**Thickness**	**102.5 mm**
	Char. flexural strength	**0.4 N/mm²**
	Char. compressive strength	**5.5068 N/mm²**
INNER LEAF	**Thickness**	**140 mm**
	Char flexural strength	**0.22333 N/mm²**
	Char. compressive strength	**5.4924 N/mm²**
	Effective wall thickness	**156.26 mm**
	Effective wall height	**2.25 m**
	Slenderness ratio	**14.399**
	Design vertical load	**135.67 kN**
	Design vert load resistance	**253.39 kN**
	Char. horizontal wind load	**0.66667 kN/m²**

Outer leaf - use Group 1 units (i.e. solid)
Inner leaf - use Group 1 units (i.e. solid)

Location: Wall on grid line A/1-2

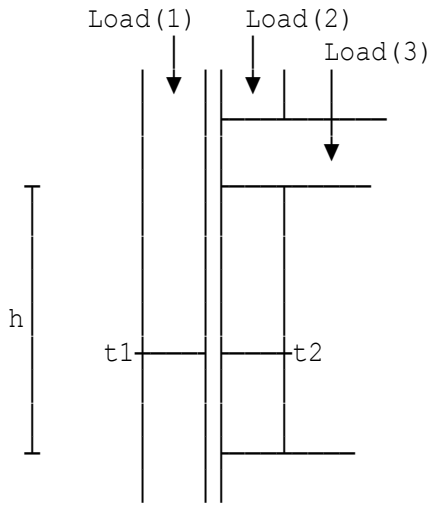

External cavity wall

This calculation is in accordance with BS5628-1:2005 the Code of practice for use of masonry. Part 1: Structural use of unreinforced masonry.

The form of this calculation is in accordance with Clause 32.8.

Thickness of outer leaf	t(1)=100 mm
Density of outer leaf	den(1)=12.4 kN/m³
Thickness of inner leaf	t(2)=130 mm
Density of inner leaf	den(2)=12.4 kN/m³
Length of wall panel	l=3.5 m
Clear height of wall	h=2.425 m
Support Restraint factor	rf=0.75
Mortar designation to Table 1	mortar=3
Partial Safety Factor Material	gammam=3.1
Masonry type (1=clay 2=cal silicate 3=conc brick 4=block)	typ(1)=1
Compressive Strength of Units	po(1)=20 N/mm²
Water absorption %age of leaf	wat(1)=9
Masonry type (1=clay 2=cal silicate 3=conc brick 4=block)	typ(2)=4
Compressive Strength of Units	po(2)=3.6 N/mm²
Height	hb(2)=215 mm
Least horizontal dimension	lhd(2)=130 mm
Dead load from upper levels	DL(1)=4 kN/m
Dead load from upper levels	DL(2)=7 kN/m
Live load from upper levels	LL(2)=5.5 kN/m
Dead load from supported floor	DL(3)=12 kN/m
Live load from supported floor	LL(3)=5 kN/m
Ecc. of floor loads on inner leaf	ecc=17 mm

Number of returns nr=1

DESIGN SUMMARY	**Wall height**	**2.425 m**
OUTER LEAF	**Thickness**	**100 mm**
	Char flex strength	**0.4 N/mm²**
	Char comp strength	**5 N/mm²**
INNER LEAF	**Thickness**	**130 mm**
	Char flex strength	**0.23 N/mm²**
	Char comp strength	**3.0549 N/mm²**
	Effective wall thickness	**153.33 mm**
	Effective wall height	**1.8188 m**
	Slenderness ratio	**11.861**
	Max vertical design load	**43.4 kN**
	Vertical load resistance	**115.57 kN**
	Vertical load (max ecc)	**31.1 kN**
	Vertical load resistance	**110.39 kN**
	Lateral capacity (normal)	**2.2222 kN/m²**
	Lateral capacity (accident)	**2.5409 kN/m²**
	Lateral capacity (protect)	**4.8278 kN/m²**

Location: Wall on grid line A/1-2

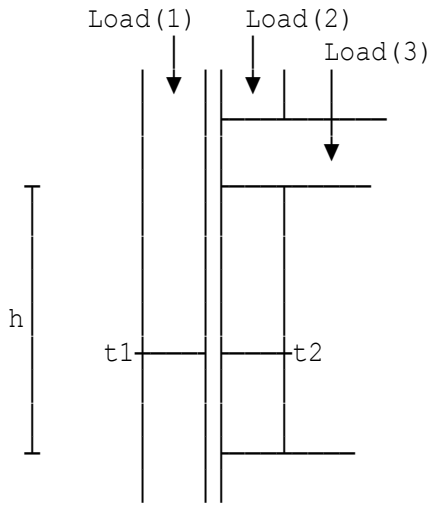

External cavity wall

This calculation is in accordance with BS5628-1:2005 the Code of practice for use of masonry. Part 1: Structural use of unreinforced masonry.

The form of this calculation is in accordance with Clause 32.8.

Thickness of outer leaf	t(1)=75 mm
Density of outer leaf	den(1)=12.4 kN/m³
Thickness of inner leaf	t(2)=450 mm
Density of inner leaf	den(2)=12.4 kN/m³
Length of wall panel	l=4 m
Clear height of wall	h=2.425 m
Support Restraint factor	rf=0.9
Mortar designation to Table 1	mortar=3
Partial Safety Factor Material	gammam=3.1
Masonry type (1=clay 2=cal silicate 3=conc brick 4=block)	typ(1)=2
Compressive Strength of Units	po(1)=60 N/mm²
Masonry type (1=clay 2=cal silicate 3=conc brick 4=block)	typ(2)=3
Compressive Strength of Units	po(2)=5.2 N/mm²
Dead load from upper levels	DL(1)=4 kN/m
Dead load from upper levels	DL(2)=5 kN/m
Live load from upper levels	LL(2)=5.5 kN/m
Dead load from supported floor	DL(3)=10 kN/m
Live load from supported floor	LL(3)=5 kN/m
Ecc. of floor loads on inner leaf	ecc=17 mm
Number of returns	nr=0

DESIGN SUMMARY	**Wall height**	**2.425 m**
OUTER LEAF	**Thickness**	**75 mm**
	Char flex strength	**0.3 N/mm²**
	Char comp strength	**9.24 N/mm²**
INNER LEAF	**Thickness**	**450 mm**
	Char flex strength	**0.3 N/mm²**
	Char comp strength	**2.5 N/mm²**
	Effective wall thickness	**450 mm**
	Effective wall height	**2.1825 m**
	Slenderness ratio	**4.85**
	Max vertical design load	**37.8 kN**
	Vertical load resistance	**362.9 kN**
	Vertical load (max ecc)	**26.5 kN**
	Vertical load resistance	**362.9 kN**
	Lateral capacity (normal)	**0 kN/m²**
	Lateral capacity (accident)	**0 kN/m²**
	Lateral capacity (protect)	**0 kN/m²**

Location: Wall on grid line A/1-2

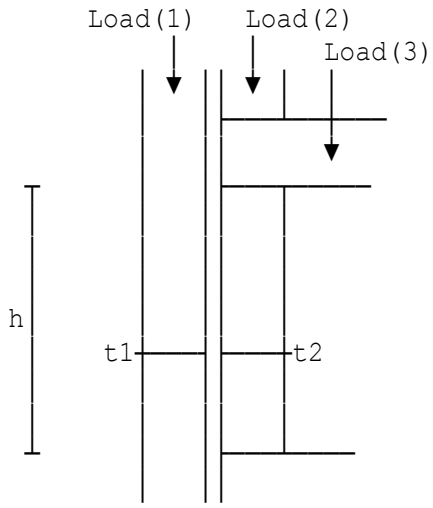

External cavity wall

This calculation is in accordance with BS5628-1:2005 the Code of practice for use of masonry. Part 1: Structural use of unreinforced masonry.

The form of this calculation is in accordance with Clause 32.8.

Thickness of outer leaf	t(1)=100 mm
Density of outer leaf	den(1)=12.4 kN/m³
Thickness of inner leaf	t(2)=130 mm
Density of inner leaf	den(2)=12.4 kN/m³
Length of wall panel	l=4 m
Clear height of wall	h=2.5 m
Support Restraint factor	rf=0.75
Mortar designation to Table 1	mortar=3
Partial Safety Factor Material	gammam=3.1
Masonry type (1=clay 2=cal silicate 3=conc brick 4=block)	typ(1)=1
Compressive Strength of Units	po(1)=20 N/mm²
Water absorption %age of leaf	wat(1)=9
Masonry type (1=clay 2=cal silicate 3=conc brick 4=block)	typ(2)=4
Compressive Strength of Units	po(2)=3.6 N/mm²
Height	hb(2)=215 mm
Least horizontal dimension	lhd(2)=130 mm
Dead load from upper levels	DL(1)=4 kN/m
Dead load from upper levels	DL(2)=7 kN/m
Live load from upper levels	LL(2)=5.5 kN/m
Dead load from supported floor	DL(3)=12 kN/m
Live load from supported floor	LL(3)=5 kN/m
Ecc. of floor loads on inner leaf	ecc=17 mm

Number of returns nr=2

DESIGN SUMMARY	**Wall height**	**2.5 m**
OUTER LEAF	**Thickness**	**100 mm**
	Char flex strength	**0.4 N/mm²**
	Char comp strength	**5 N/mm²**
INNER LEAF	**Thickness**	**130 mm**
	Char flex strength	**0.23 N/mm²**
	Char comp strength	**3.0549 N/mm²**
	Effective wall thickness	**153.33 mm**
	Effective wall height	**1.875 m**
	Slenderness ratio	**12.228**
	Max vertical design load	**43.4 kN**
	Vertical load resistance	**114.76 kN**
	Vertical load (max ecc)	**31.1 kN**
	Vertical load resistance	**109.75 kN**
	Lateral capacity (normal)	**3.3197 kN/m²**
	Lateral capacity (accident)	**3.7958 kN/m²**
	Lateral capacity (protect)	**7.212 kN/m²**

Location: Wall on grid line A/1-2

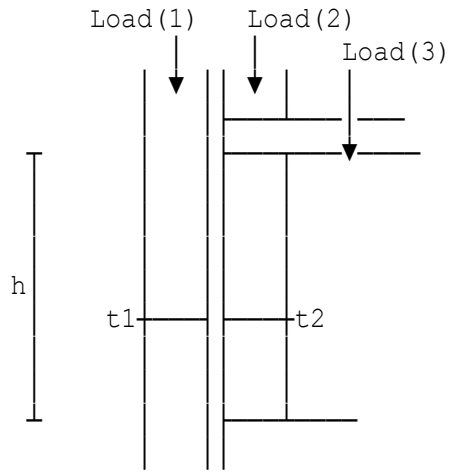

External cavity wall

This calculation is in accordance with EC6 Part 1-1: General rules for reinforced and unreinforced masonry structures.

The form of this calculation is in accordance with section 6 of the code of practice.

Thickness of outer leaf	t(1)=100 mm
Density of outer leaf	den(1)=12.4 kN/m³
Thickness of inner leaf	t(2)=130 mm
Density of inner leaf	den(2)=12.4 kN/m³
Length of wall panel	l=3.5 m
Clear height of wall	h=2.425 m
Support restraint factor	rf=0.75
Mortar designation to Table 1	mortar=3
Partial safety factor (material)	gamM=2.7
Masonry type (1=clay 2=cal silicate 3=conc brick 4=block)	typ(1)=1
Compressive strength of units	po(1)=20 N/mm²
Water absorption %age of leaf	wat(1)=9
Constant K from NA Table NA.4	K(1)=0.5
Height of masonry unit	hu(1)=65 mm
Least horiz. dimension of units	lhd(1)=100 mm
Masonry type (1=clay 2=cal silicate 3=conc brick 4=block)	typ(2)=4
Compressive strength of units	po(2)=3.6 N/mm²
Constant K from NA Table NA.4	K(2)=0.75
Height of masonry unit	hu(2)=215 mm
Least horiz. dimension of units	lhd(2)=130 mm
Permanent load from upper levels	Gk(1)=4 kN/m
Permanent load from upper levels	Gk(2)=7 kN/m
Variable load from upper levels	Qk(2)=5.5 kN/m
Permanent load from floor	Gk(3)=12 kN/m
Variable load from floor	Qk(3)=5 kN/m
Ecc. of floor load on inner leaf	ecc=21.667 mm
Perm actions (upper levels)	gamG2=1.35
Perm actions (floor)	gamG3=1.35
Variable actions (vertical load)	gamQ=1.5

horizontal loads (e.g. wind load) ehe=0 mm
loads (e.g. wind load) ehm=0 mm

Design moment at mid-height Mmd=0.57252 kNm/m
Leading variable load factor Ψ1 psi1=0.5
Other variable load factor Ψ2 psi2=0.3

DESIGN SUMMARY	**Wall height**	**2.425 m**
OUTER LEAF	**Thickness**	**100 mm**
	Char flex strength	**0.4 N/mm²**
	Char comp strength	**5.5068 N/mm²**
INNER LEAF	**Thickness**	**130 mm**
	Char flex strength	**0.23 N/mm²**
	Char comp strength	**3.3845 N/mm²**
	Effective wall thickness	**147.24 mm**
	Effective wall height	**1.8188 m**
	Slenderness ratio	**12.352**
	Design vertical load	**41.4 kN**
	Design vert.load resistance	**102.18 kN**
	Lateral capacity (normal)	**3.6024 kN/m²**
	Lateral capacity (accident)	**3.6024 kN/m²**
	Lateral capacity (key elem)	**7.2048 kN/m²**
	Outer leaf - use Group 1 units (i.e. solid)	
	Inner leaf - use Group 1 units (i.e. solid)	

Location: Wall on grid line A/1-2

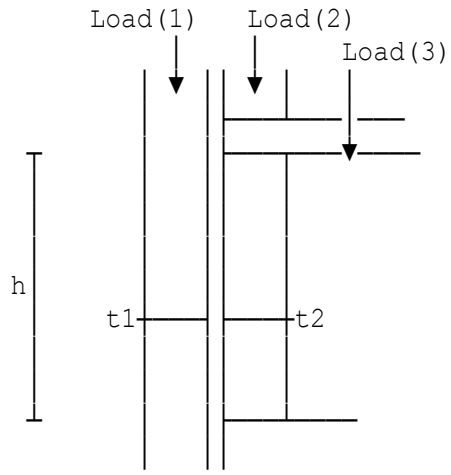

External cavity wall

This calculation is in accordance with EC6 Part 1-1: General rules for reinforced and unreinforced masonry structures.

The form of this calculation is in accordance with section 6 of the code of practice.

Thickness of outer leaf	t(1)=75 mm
Density of outer leaf	den(1)=12.4 kN/m³
Thickness of inner leaf	t(2)=450 mm
Density of inner leaf	den(2)=12.4 kN/m³
Length of wall panel	l=4 m
Clear height of wall	h=2.425 m
Support restraint factor	rf=0.9
Mortar designation to Table 1	mortar=3
Partial safety factor (material)	gamM=2.7
Masonry type (1=clay 2=cal silicate 3=conc brick 4=block)	typ(1)=2
Compressive strength of units	po(1)=60 N/mm²
Constant K from NA Table NA.4	K(1)=0.5
Height of masonry unit	hu(1)=65 mm
Least horiz. dimension of units	lhd(1)=100 mm
Masonry type (1=clay 2=cal silicate 3=conc brick 4=block)	typ(2)=3
Compressive strength of units	po(2)=5.2 N/mm²
Constant K from NA Table NA.4	K(2)=0.75
Height of masonry unit	hu(2)=65 mm
Least horiz. dimension of units	lhd(2)=100 mm
Permanent load from upper levels	Gk(1)=4 kN/m
Permanent load from upper levels	Gk(2)=5 kN/m
Variable load from upper levels	Qk(2)=5.5 kN/m
Permanent load from floor	Gk(3)=10 kN/m
Variable load from floor	Qk(3)=5 kN/m
Ecc. of floor load on inner leaf	ecc=75 mm
Perm actions (upper levels)	gamG2=1.35
Perm actions (floor)	gamG3=1.35
Variable actions (vertical load)	gamQ=1.5

horizontal loads (e.g. wind load) ehe=0 mm
loads (e.g. wind load) ehm=0 mm

Design moment at mid-height Mmd=2.031 kNm/m
Leading variable load factor Ψ1 psi1=0.5
Other variable load factor Ψ2 psi2=0.3

DESIGN SUMMARY	**Wall height**	**2.425 m**
OUTER LEAF	**Thickness**	**75 mm**
	Char flex strength	**0.3 N/mm²**
	Char comp strength	**11.882 N/mm²**
INNER LEAF	**Thickness**	**450 mm**
	Char flex strength	**0.3 N/mm²**
	Char comp strength	**3.2172 N/mm²**
	Effective wall thickness	**450.42 mm**
	Effective wall height	**2.1825 m**
	Slenderness ratio	**4.8455**
	Design vertical load	**36 kN**
	Design vert.load resistance	**412.7 kN**
	Lateral capacity (normal)	**0 kN/m²**
	Lateral capacity (accident)	**0 kN/m²**
	Lateral capacity (key elem)	**0 kN/m²**

Outer leaf - use Group 1 units (i.e. solid)
Inner leaf - use Group 1 units (i.e. solid)

Location: Wall on grid line A/1-2

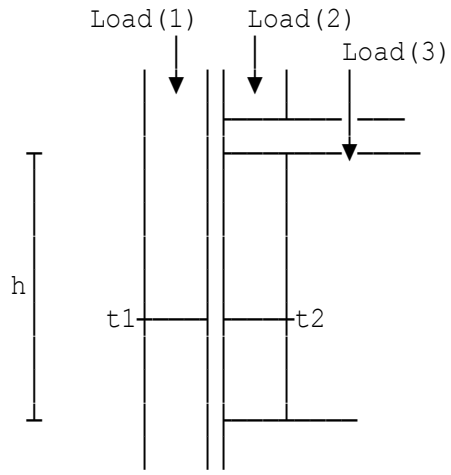

External cavity wall

This calculation is in accordance with EC6 Part 1-1: General rules for reinforced and unreinforced masonry structures.

The form of this calculation is in accordance with section 6 of the code of practice.

Thickness of outer leaf	t(1)=100 mm
Density of outer leaf	den(1)=12.4 kN/m³
Thickness of inner leaf	t(2)=130 mm
Density of inner leaf	den(2)=12.4 kN/m³
Length of wall panel	l=4 m
Clear height of wall	h=2.5 m
Support restraint factor	rf=0.75
Mortar designation to Table 1	mortar=3
Partial safety factor (material)	gamM=2.7
Masonry type (1=clay 2=cal silicate 3=conc brick 4=block)	typ(1)=1
Compressive strength of units	po(1)=20 N/mm²
Water absorption %age of leaf	wat(1)=9
Constant K from NA Table NA.4	K(1)=0.5
Height of masonry unit	hu(1)=65 mm
Least horiz. dimension of units	lhd(1)=100 mm
Masonry type (1=clay 2=cal silicate 3=conc brick 4=block)	typ(2)=4
Compressive strength of units	po(2)=3.6 N/mm²
Constant K from NA Table NA.4	K(2)=0.75
Height of masonry unit	hu(2)=215 mm
Least horiz. dimension of units	lhd(2)=130 mm
Permanent load from upper levels	Gk(1)=4 kN/m
Permanent load from upper levels	Gk(2)=7 kN/m
Variable load from upper levels	Qk(2)=5.5 kN/m
Permanent load from floor	Gk(3)=12 kN/m
Variable load from floor	Qk(3)=5 kN/m
Ecc. of floor load on inner leaf	ecc=21.667 mm
Perm actions (upper levels)	gamG2=1.35
Perm actions (floor)	gamG3=1.35
Variable actions (vertical load)	gamQ=1.5

horizontal loads (e.g. wind load) ehe=0 mm
loads (e.g. wind load) ehm=0 mm

Design moment at mid-height Mmd=0.57357 kNm/m
Leading variable load factor Ψ1 psi1=0.5
Other variable load factor Ψ2 psi2=0.3

DESIGN SUMMARY	**Wall height**	**2.5 m**
OUTER LEAF	**Thickness**	**100 mm**
	Char flex strength	**0.4 N/mm²**
	Char comp strength	**5.5068 N/mm²**
INNER LEAF	**Thickness**	**130 mm**
	Char flex strength	**0.23 N/mm²**
	Char comp strength	**3.3845 N/mm²**
	Effective wall thickness	**147.24 mm**
	Effective wall height	**1.875 m**
	Slenderness ratio	**12.734**
	Design vertical load	**41.4 kN**
	Design vert.load resistance	**100.61 kN**
	Lateral capacity (normal)	**3.3895 kN/m²**
	Lateral capacity (accident)	**3.3895 kN/m²**
	Lateral capacity (key elem)	**6.779 kN/m²**

Outer leaf - use Group 1 units (i.e. solid)
Inner leaf - use Group 1 units (i.e. solid)

Location: Wall on grid line A/1-2

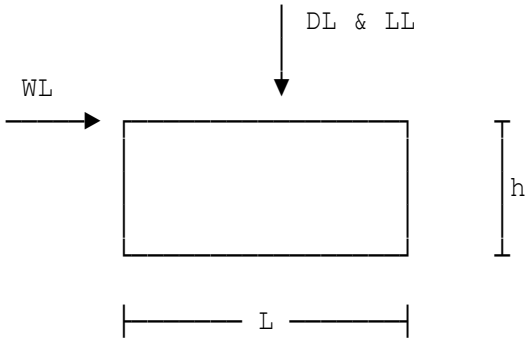

Elevation on shear wall

Masonry shear wall

These calculations are in accordance with BS5628-1:2005 the "Code of practice for the use of masonry".

Length of shear wall	L=0.7 m
Density of masonry	dens=12 kN/m³
Thickness of wall	t=100 mm
between lateral restraints	h=2.6 m
Support Restraint factor	rf=0.75
Mortar designation to Table 1	mortar=3
Masonry type (1=clay 2=cal silicate 3=conc brick 4=block)	typ(1)=4
Compressive strength of units	po=10.4 N/mm²
Height	hb=215 mm
Least horiz dimension	lhd=100 mm
Partial safety factor material	gammam=2.5
Characteristic dead load	DL=40 kN
Characteristic imposed load	LL=0 kN
Characteristic wind load	WL=2.05 kN

DESIGN SUMMARY	**Wall height**	**2.6 m**
	Wall length	**0.7 m**
	Wall thickness	**100 mm**
	Char comp strength	**4.7362 N/mm²**
	Char flex strength	**0.25 N/mm²**
	Design shear load	**2.87 kN**
	Design shear strength	**13.312 kN**
	Compression throughout	
	Maximum comp (DL+SL+wind)	**1.1147 N/mm²**
	Allowable compn	**1.8945 N/mm²**
	Maximum compn (DL+wind)	**1.3005 N/mm²**
	Allowable compn (DL+wind)	**1.8945 N/mm²**

Location: Wall on grid line A/1-2

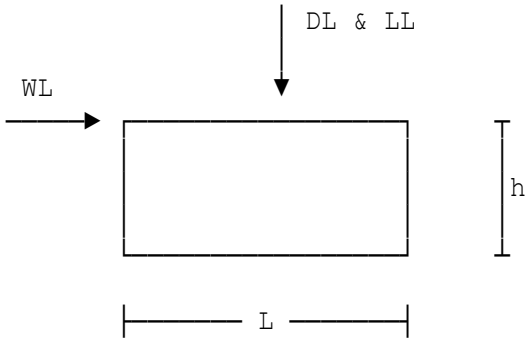

Elevation on shear wall

Masonry shear wall

These calculations are in accordance with BS5628-1:2005 the "Code of practice for the use of masonry".

Length of shear wall	L=0.7 m
Density of masonry	dens=12 kN/m³
Thickness of wall	t=140 mm
between lateral restraints	h=2.6 m
Support Restraint factor	rf=0.75
Mortar designation to Table 1	mortar=2
Masonry type (1=clay 2=cal silicate 3=conc brick 4=block)	typ(1)=4
Compressive strength of units	po=10.4 N/mm²
Height	hb=215 mm
Least horiz dimension	lhd=140 mm
Partial safety factor material	gammam=2.5
Characteristic dead load	DL=40 kN
Characteristic imposed load	LL=0 kN
Characteristic wind load	WL=0.85 kN

DESIGN SUMMARY	**Wall height**	**2.6 m**
	Wall length	**0.7 m**
	Wall thickness	**140 mm**
	Char comp strength	**5.2907 N/mm²**
	Char flex strength	**0.25 N/mm²**
	Design shear load	**1.19 kN**
	Design shear strength	**23.02 kN**
	Compression throughout	
	Maximum comp (DL+SL+wind)	**0.75919 N/mm²**
	Allowable compn	**2.1163 N/mm²**
	Maximum compn (DL+wind)	**0.88572 N/mm²**
	Allowable compn (DL+wind)	**2.1163 N/mm²**

Location: Wall on grid line A/1-2

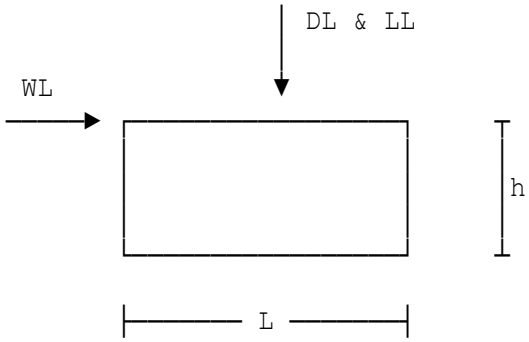

Elevation on shear wall

Masonry shear wall

These calculations are in accordance with BS5628-1:2005 the "Code of practice for the use of masonry".

Length of shear wall	L=4 m
Density of masonry	dens=12 kN/m³
Thickness of wall	t=100 mm
between lateral restraints	h=2 m
Support Restraint factor	rf=0.75
Mortar designation to Table 1	mortar=2
Masonry type (1=clay 2=cal silicate 3=conc brick 4=block)	typ(1)=1
Compressive strength of units	po=50 N/mm²
Water absorption %age of leaf	water=9
Partial safety factor material	gammam=2.5
Characteristic dead load	DL=40 kN
Characteristic imposed load	LL=0 kN
Characteristic wind load	WL=0.85 kN

DESIGN SUMMARY	**Wall height**	**2 m**
	Wall length	**4 m**
	Wall thickness	**100 mm**
	Char comp strength	**8.17 N/mm²**
	Char flex strength	**0.4 N/mm²**
	Design shear load	**1.19 kN**
	Design shear strength	**66.714 kN**
	Compression throughout	
	Maximum comp (DL+SL+wind)	**0.15645 N/mm²**
	Allowable compn	**3.268 N/mm²**
	Maximum compn (DL+wind)	**0.18253 N/mm²**
	Allowable compn (DL+wind)	**3.268 N/mm²**

Location: Wall on grid line A/1-2

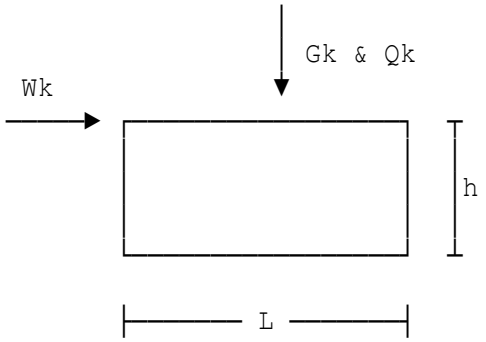

Elevation on shear wall

Masonry shear wall

These calculations are in accordance with EC6 Part 1-1 General rules for reinforced and unreinforced masonry structures.

Wk = Characteristic wind load

Length of shear wall	L=0.7 m
Density of masonry	dens=12 kN/m³
Thickness of wall	t=100 mm
between lateral restraints	h=2.6 m
Support Restraint factor	rf=0.75
Mortar designation to Table NA.2	mortar=3
Masonry type (1=clay 2=cal silicate 3=conc brick 4=block)	typ(1)=4
Compressive strength of units	po=10.4 N/mm²
Constant K from NA Table NA.4	K(1)=0.75
Height of masonry unit	hu=215 mm
Least horiz. dimension of units	lhd=100 mm
Partial safety factor (material)	gamM=2.3
Characteristic permanent load	Gk=40 kN
Characteristic variable load	Qk=0 kN
Characteristic wind load	Wk=2.05 kN
Factor Ψo for variable load	psi0=0.7

DESIGN SUMMARY	**Wall height**	**2.6 m**
	Wall length	**0.7 m**
	Wall thickness	**100 mm**
	Char compressive strength	**6.6767 N/mm²**
	Char flexural strength	**0.25 N/mm²**
	Design shear force	**3.075 kN**
	Design shear resistance	**10.274 kN**
	Compression throughout	
	Design comp stress (Gk+Qk+Wk)	**1.3356 N/mm²**
	Design compressive strength	**2.9029 N/mm²**
	Design comp stress (Gk+Wk)	**1.303 N/mm²**
	Design compressive strength	**2.9029 N/mm²**

Location: Wall on grid line A/1-2

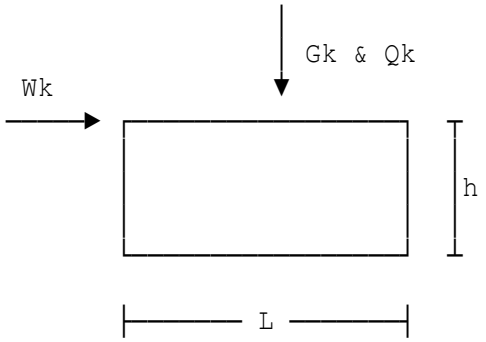

Elevation on shear wall

Masonry shear wall

These calculations are in accordance with EC6 Part 1-1 General rules for reinforced and unreinforced masonry structures.

Wk = Characteristic wind load

Length of shear wall	L=0.7 m
Density of masonry	dens=12 kN/m³
Thickness of wall	t=140 mm
between lateral restraints	h=2.6 m
Support Restraint factor	rf=0.75
Mortar designation to Table NA.2	mortar=2
Masonry type (1=clay 2=cal silicate 3=conc brick 4=block)	typ(1)=4
Compressive strength of units	po=10.4 N/mm²
Constant K from NA Table NA.4	K(1)=0.75
Height of masonry unit	hu=215 mm
Least horiz. dimension of units	lhd=140 mm
Partial safety factor (material)	gamM=2.3
Characteristic permanent load	Gk=40 kN
Characteristic variable load	Qk=0 kN
Characteristic wind load	Wk=0.85 kN
Factor Ψo for variable load	psi0=0.7

DESIGN SUMMARY	**Wall height**	**2.6 m**
	Wall length	**0.7 m**
	Wall thickness	**140 mm**
	Char compressive strength	**7.8991 N/mm²**
	Char flexural strength	**0.25 N/mm²**
	Design shear force	**1.275 kN**
	Design shear resistance	**12.08 kN**
	Compression throughout	
	Design comp stress (Gk+Qk+Wk)	**0.86308 N/mm²**
	Design compressive strength	**3.4344 N/mm²**
	Design comp stress (Gk+Wk)	**0.88308 N/mm²**
	Design compressive strength	**3.4344 N/mm²**

Location: Wall on grid line A/1-2

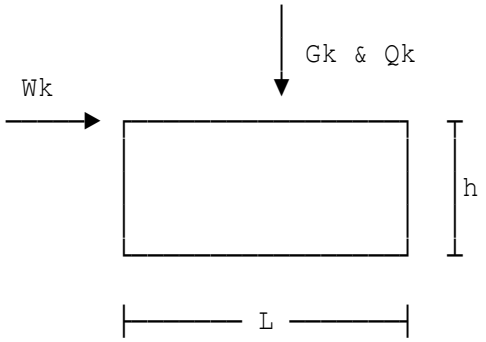

Elevation on shear wall

Masonry shear wall

These calculations are in accordance with EC6 Part 1-1 General rules for reinforced and unreinforced masonry structures.

Wk = Characteristic wind load

Length of shear wall	L=4 m
Density of masonry	dens=12 kN/m³
Thickness of wall	t=100 mm
between lateral restraints	h=2 m
Support Restraint factor	rf=0.75
Mortar designation to Table NA.2	mortar=2
Masonry type (1=clay 2=cal silicate 3=conc brick 4=block)	typ(1)=1
Compressive strength of units	po=50 N/mm²
Water absorption %age of leaf	water=9
Constant K from NA Table NA.4	K(1)=0.5
Height of masonry unit	hu=65 mm
Least horiz. dimension of units	lhd=100 mm
Partial safety factor (material)	gamM=2.3
Characteristic permanent load	Gk=40 kN
Characteristic variable load	Qk=0 kN
Characteristic wind load	Wk=0.85 kN
Factor Ψo for variable load	psi0=0.7

DESIGN SUMMARY	**Wall height**	**2 m**
	Wall length	**4 m**
	Wall thickness	**100 mm**
	Char compressive strength	**11.811 N/mm²**
	Char flexural strength	**0.4 N/mm²**
	Design shear force	**1.275 kN**
	Design shear resistance	**39.142 kN**
	Compression throughout	
	Design comp stress (Gk+Qk+Wk)	**0.14998 N/mm²**
	Design compressive strength	**5.1352 N/mm²**
	Design comp stress (Gk+Wk)	**0.17696 N/mm²**
	Design compressive strength	**5.1352 N/mm²**

Location: Wall on grid line B

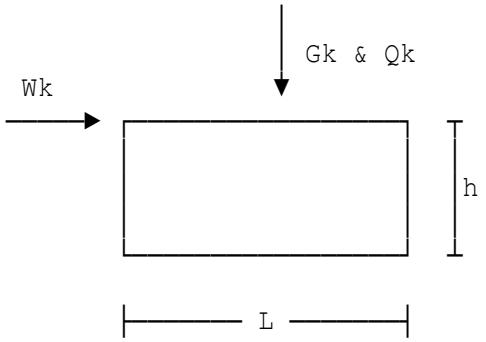

Elevation on shear wall

Masonry shear wall

These calculations are in accordance with EC6 Part 1-1 General rules for reinforced and unreinforced masonry structures.

Wk = Characteristic wind load

Length of shear wall	L=4 m
Density of masonry	dens=6 kN/m³
Thickness of wall	t=100 mm
between lateral restraints	h=2.4 m
Support Restraint factor	rf=1
Mortar designation to Table NA.2	mortar=3
Masonry type (1=clay 2=cal silicate 3=conc brick 4=block)	typ(1)=4
Compressive strength of units	po=3.6 N/mm²
Constant K from NA Table NA.4	K(1)=0.75
Normalised mean comp strength	fbn(1)=5 N/mm²
Partial safety factor (material)	gamM=2.7
Characteristic permanent load	Gk=0 kN
Characteristic variable load	Qk=0 kN
Characteristic wind load	Wk=6.95 kN
Factor Ψo for variable load	psi0=0.5

DESIGN SUMMARY	**Wall height**	**2.4 m**
	Wall length	**4 m**
	Wall thickness	**100 mm**
	Char compressive strength	**3.5072 N/mm²**
	Char flexural strength	**0.25 N/mm²**
	Design shear force	**10.425 kN**
	Design shear resistance	**24.829 kN**
	Design tensile stress	**0.087345 N/mm²**
	Design tensile strength	**0.092593 N/mm²**
	Design comp stress (Gk+Qk+Wk)	**0.13292 N/mm²**
	Design compressive strength	**1.299 N/mm²**
	Design comp stress (Gk+Wk)	**0.11327 N/mm²**
	Design compressive strength	**1.299 N/mm²**

Location: Leisure Centre

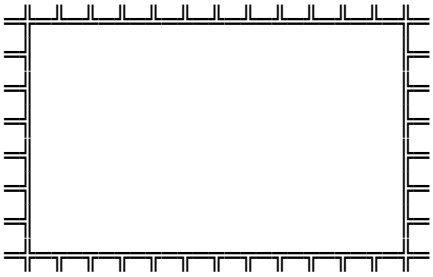

Single storey building to BS5628

Loadbearing brick fin walls with panels between constructed using cavity construction.
Roof plate provides prop at top of fin walls, and transmits wind forces to the flank/end walls.

Spacing of fins	Lf=4.05 m
Height to eaves (top of fin)	h=7 m
Thickness of outer leaf	t(1)=102.5 mm
Density of outer leaf	den(1)=20 kN/m³
Thickness of inner leaf	t(2)=102.5 mm
Density of inner leaf	den(2)=20 kN/m³
Depth of fin	D=1115 mm
Thickness of fin	t=327 mm
Mortar designation to Table 1	mortar=3
Partial Safety Factor Material	gammam=2.5
Masonry type (1=clay 2=cal silicate 3=conc brick 4=block)	typ(1)=1
Compressive Strength of Units	po(1)=40 N/mm²
Water absorption %age of leaf	water=7
Masonry type (1=clay 2=cal silicate 3=conc brick 4=block)	typ(2)=1
Compressive strength of units	po(2)=20 N/mm²
Water absorption %age of leaf	water=7
Dynamic wind pressure	q=0.4 kN/m²
Max Cpe on windward face (+ve)	Cpew=0.7
Max Cpe on suction face (-ve)	Cpes=-0.6
Max Cpe on roof (-ve)	Cper=-0.85
Metal decking on roof	DL1=0.18 kN/m²
Felt & chippings on roof	DL2=0.33 kN/m²
Own weight of roof beams	DL3=0.2 kN/m²
Superimposed load	LL=0.75 kN/m²

DESIGN SUMMARY	**Wall height**	**7 m**
	Length between fins	**4.05 m**
OUTER LEAF	**Thickness**	**102.5 mm**
	Char flex strength (bed)	**0.4 N/mm²**
	Char flex strength (perp)	**1.1 N/mm²**
	Char comp strength	**7.4 N/mm²**
INNER LEAF	**Thickness**	**102.5 mm**
	Char flex strength (bed)	**0.4 N/mm²**
	Char flex strength (perp)	**1.1 N/mm²**
	Char comp strength	**5 N/mm²**
LEAF	**Bending moment between fins**	**0.6561 kNm**
	Bend strength between fins	**1.5409 kNm**
FINS (pressure)	**Bending stress in tension**	**0.001143 N/mm²**
	Bending stress in comp	**0.13039 N/mm²**
(suction)	**Bending stress in tension**	**-0.019265 N/mm²**
	Bending stress in comp	**0.084136 N/mm²**
	Bend strength in tension	**0.16 N/mm²**
	Bend strength in comp	**3.256 N/mm²**

Location: Leisure Centre

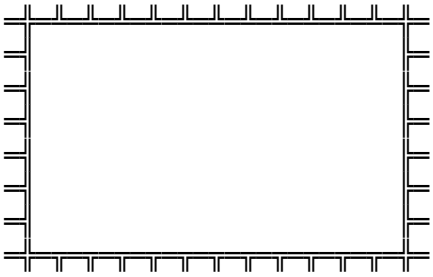

Single storey building to BS5628

Loadbearing brick fin walls with panels between constructed using cavity construction.
Roof plate provides prop at top of fin walls, and transmits wind forces to the flank/end walls.

Spacing of fins	Lf=1 m
Height to eaves (top of fin)	h=2.5 m
Thickness of outer leaf	t(1)=100 mm
Density of outer leaf	den(1)=20 kN/m³
Thickness of inner leaf	t(2)=305 mm
Density of inner leaf	den(2)=5 kN/m³
Depth of fin	D=500 mm
Thickness of fin	t=200 mm
Mortar designation to Table 1	mortar=3
Partial Safety Factor Material	gammam=2.5
Masonry type (1=clay 2=cal silicate 3=conc brick 4=block)	typ(1)=2
Compressive Strength of Units	po(1)=60 N/mm²
Masonry type (1=clay 2=cal silicate 3=conc brick 4=block)	typ(2)=4
Compressive strength of units	po(2)=22.5 N/mm²
Height	hb(2)=215 mm
Least horizontal dimension	lhd(2)=305 mm
Dynamic wind pressure	q=0.4 kN/m²
Max Cpe on windward face (+ve)	Cpew=0.7
Max Cpe on suction face (-ve)	Cpes=-0.6
Max Cpe on roof (-ve)	Cper=-0.85
Metal decking on roof	DL1=0.18 kN/m²
Felt & chippings on roof	DL2=0.33 kN/m²
Own weight of roof beams	DL3=0.2 kN/m²
Superimposed load	LL=0.75 kN/m²

Copyright 1986-2024 Fitzroy Systems Ltd.

DESIGN SUMMARY	**Wall height**	**2.5 m**
	Length between fins	**1 m**
OUTER LEAF	**Thickness**	**100 mm**
	Char flex strength (bed)	**0.3 N/mm²**
	Char flex strength (perp)	**0.9 N/mm²**
	Char comp strength	**9.24 N/mm²**
INNER LEAF	**Thickness**	**305 mm**
	Char flex strength (bed)	**0.25 N/mm²**
	Char flex strength (perp)	**0.9 N/mm²**
	Char comp strength	**6.4496 N/mm²**
LEAF	**Bending moment between fins**	**0.04 kNm**
	Bend strength between fins	**6.1815 kNm**
FINS (pressure)	**Bending stress in tension**	**0.0067806 N/mm²**
	Bending stress in comp	**0.038108 N/mm²**
(suction)	**Bending stress in tension**	**-0.11139E-3 N/mm²**
	Bending stress in comp	**0.02495 N/mm²**
	Bend strength in tension	**0.12 N/mm²**
	Bend strength in comp	**4.0656 N/mm²**

Location: Leisure Centre

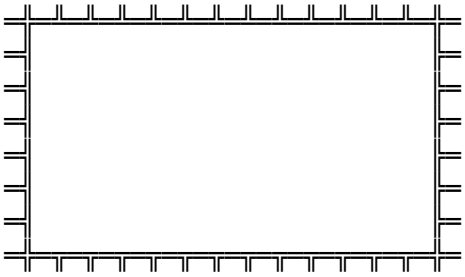

Single storey building to EC6

Loadbearing brick fin walls with panels between constructed using cavity construction.
Roof plate provides prop at top of fin walls and transmits wind forces to the flank/end walls.

Spacing of fins	Lf=4.05 m
Height to eaves (top of fin)	h=7 m
Thickness of outer leaf	t(1)=102.5 mm
Density of outer leaf	den(1)=20 kN/m³
Thickness of inner leaf	t(2)=102.5 mm
Density of inner leaf	den(2)=20 kN/m³
Depth of fin	D=1115 mm
Thickness of fin	t=327 mm
Mortar designation to Table NA.2	mortar=3
Partial safety factor (material)	gamM=2.3
Masonry type (1=clay 2=cal silicate 3=conc brick 4=block)	typ(1)=1
Compressive strength of units	po(1)=40 N/mm²
Water absorption %age of leaf	water=7
Constant K from NA Table NA.4	K(1)=0.5
Height of masonry unit	hu(1)=65 mm
Least horiz. dimension of units	lhd(1)=102.5 mm
Masonry type (1=clay 2=cal silicate 3=conc brick 4=block)	typ(2)=1
Compressive strength of units	po(2)=20 N/mm²
Water absorption %age of leaf	water=7
Constant K from NA Table NA.4	K(2)=0.5
Height of masonry unit	hu(2)=65 mm
Least horiz. dimension of units	lhd(2)=100 mm
Peak velocity pressure	qp=0.4 kN/m²
Max Cpe on windward face (+ve)	Cpew=0.7
Max Cpe on suction face (-ve)	Cpes=-0.6
Max Cpe on roof (-ve)	Cper=-0.85
Metal decking on roof	Gk1=0.18 kN/m²
Felt & chippings on roof	Gk2=0.33 kN/m²
Own weight of roof beams	Gk3=0.2 kN/m²
Variable load on roof	Qk=0.75 kN/m²

DESIGN SUMMARY	**Wall height**	**7 m**
	Length between fins	**4.05 m**
OUTER LEAF	**Thickness**	**102.5 mm**
	Char flex strength (bed)	**0.4 N/mm²**
	Char flex strength (perp)	**1.1 N/mm²**
	Char comp strength	**7.1272 N/mm²**
INNER LEAF	**Thickness**	**102.5 mm**
	Char flex strength (bed)	**0.4 N/mm²**
	Char flex strength (perp)	**1.1 N/mm²**
	Char comp strength	**4.4055 N/mm²**
LEAF	**Bending moment between fins**	**0.70296 kNm**
	Bend strength between fins	**1.6749 kNm**
FINS (pressure)	**Bending stress in tension**	**-0.0067309 N/mm²**
	Bending stress in comp	**0.13847 N/mm²**
(suction)	**Bending stress in tension**	**-0.025725 N/mm²**
	Bending stress in comp	**0.090435 N/mm²**
	Bend strength in tension	**0.17391 N/mm²**
	Bend strength in comp	**3.4087 N/mm²**
	Outer leaf - use Group 1 units (i.e. solid)	
	Inner leaf - use Group 1 units (i.e. solid)	

Location: Leisure Centre

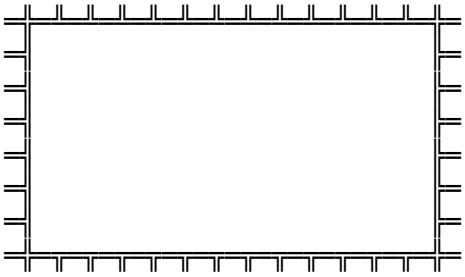

Single storey building to EC6

Loadbearing brick fin walls with panels between constructed using cavity construction.
Roof plate provides prop at top of fin walls and transmits wind forces to the flank/end walls.

Spacing of fins	Lf=1 m
Height to eaves (top of fin)	h=2.5 m
Thickness of outer leaf	t(1)=100 mm
Density of outer leaf	den(1)=20 kN/m³
Thickness of inner leaf	t(2)=305 mm
Density of inner leaf	den(2)=5 kN/m³
Depth of fin	D=500 mm
Thickness of fin	t=200 mm
Mortar designation to Table NA.2	mortar=3
Partial safety factor (material)	gamM=2.3
Masonry type (1=clay 2=cal silicate 3=conc brick 4=block)	typ(1)=2
Compressive strength of units	po(1)=60 N/mm²
Constant K from NA Table NA.4	K(1)=0.5
Height of masonry unit	hu(1)=65 mm
Least horiz. dimension of units	lhd(1)=100 mm
Masonry type (1=clay 2=cal silicate 3=conc brick 4=block)	typ(2)=4
Compressive strength of units	po(2)=22.5 N/mm²
Constant K from NA Table NA.4	K(2)=0.75
Height of masonry unit	hu(2)=215 mm
Least horiz. dimension of units	lhd(2)=305 mm
Peak velocity pressure	qp=0.4 kN/m²
Max Cpe on windward face (+ve)	Cpew=0.7
Max Cpe on suction face (-ve)	Cpes=-0.6
Max Cpe on roof (-ve)	Cper=-0.85
Metal decking on roof	Gk1=0.18 kN/m²
Felt & chippings on roof	Gk2=0.33 kN/m²
Own weight of roof beams	Gk3=0.2 kN/m²
Variable load on roof	Qk=0.75 kN/m²

DESIGN SUMMARY	**Wall height**	**2.5 m**
	Length between fins	**1 m**
OUTER LEAF	**Thickness**	**100 mm**
	Char flex strength (bed)	**0.3 N/mm²**
	Char flex strength (perp)	**0.9 N/mm²**
	Char comp strength	**9.5055 N/mm²**
INNER LEAF	**Thickness**	**305 mm**
	Char flex strength (bed)	**0.25 N/mm²**
	Char flex strength (perp)	**0.9 N/mm²**
	Char comp strength	**8.6774 N/mm²**
LEAF	**Bending moment between fins**	**0.042857 kNm**
	Bend strength between fins	**6.719 kNm**
FINS (pressure)	**Bending stress in tension**	**0.0028972 N/mm²**
	Bending stress in comp	**0.041018 N/mm²**
(suction)	**Bending stress in tension**	**-0.0024398 N/mm²**
	Bending stress in comp	**0.028057 N/mm²**
	Bend strength in tension	**0.13043 N/mm²**
	Bend strength in comp	**4.5461 N/mm²**
	Outer leaf - use Group 1 units (i.e. solid)	
	Inner leaf - use Group 1 units (i.e. solid)	

Location: Ex1 - Wall on grid line A/1-2

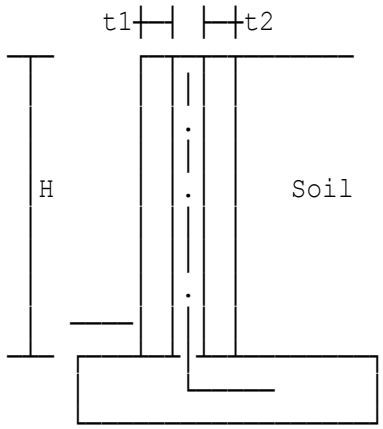

Reinforced masonry retaining wall to BS5628-2:2005

Cavity to be filled with concrete or grout of C25/30 minimum compressive strength. Cavity width to be a minimum of 100 mm and earth face leaf to be ≥ 100 mm thick. Concrete base design is beyond the scope of this proforma.

Outer skin thickness	t1=215 mm
Earth face skin thickness	t2=102 mm
Wall height	H=4.5 m
Cavity width (minimum 100 mm)	cw=100 mm
Ultimate moment at top of base	Mu=20.6 kNm
Ultimate shear at top of base	Vu=27 kN
Mortar designation to Table 1	mortar=2
Masonry type (1=clay 2=cal silicate 3=conc brick 4=block)	typ(1)=1
Compressive strength of units	po(1)=30 N/mm²
Water absorption %age of leaf	water=7
Partial safety factor (reinft.)	gammam=2
Characteristic tensile strength	fy=500 N/mm²
Diameter of reinforcing bars	diam=12 mm
Char anchorage bond strength	fb=4.1 N/mm²

DESIGN SUMMARY

Ultimate bending moment	**20.6 kNm**
Ultimate shear force	**27 kN**
Wall effective depth	**265 mm**
Wall effective width	**1000 mm**
Maximum wall height	**4.5 m**
Tensile strength of reinft.	**500 N/mm²**
Mortar designation	**2**
Compressive strength of units	**30 N/mm²**
Area of reinforcement in wall	**565.49 mm²/m**
Diameter of reinforcing bars	**12 mm**

Partial safety factors:

Masonry	**2**
Reinforcement strength	**1.15**
Shear strength of masonry	**2**
Bond strength	**1.5**

The design of the concrete base is beyond the scope of this proforma. Brick or block could be used for the earth face leaf. Use masonry units of category I manufacturing control and of water absorption ≤ 7%

Location: Ex2 - Brick retaining wall

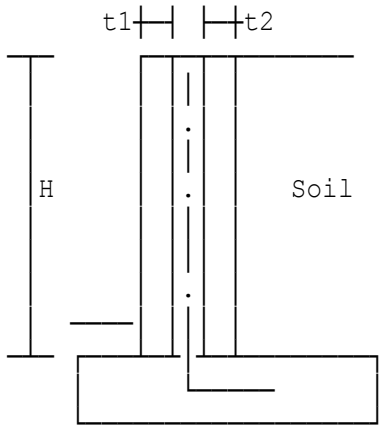

Reinforced masonry retaining wall to

BS5628-2:2005

Cavity to be filled with concrete or grout of C25/30 minimum compressive strength. Cavity width to be a minimum of 100 mm and earth face leaf to be ≥ 100 mm thick. Concrete base design is beyond the scope of this proforma.

Outer skin thickness	t1=102 mm
Earth face skin thickness	t2=102 mm
Wall height	H=2.7 m
Cavity width (minimum 100 mm)	cw=100 mm
Ultimate moment at top of base	Mu=9.5 kNm
Ultimate shear at top of base	Vu=14.2 kN
Mortar designation to Table 1	mortar=1
Masonry type (1=clay 2=cal silicate 3=conc brick 4=block)	typ(1)=1
Compressive strength of units	po(1)=30 N/mm²
Water absorption %age of leaf	water=12
Partial safety factor (reinft.)	gammam=2.3
Characteristic tensile strength	fy=500 N/mm²
Diameter of reinforcing bars	diam=12 mm
Char anchorage bond strength	fb=4.1 N/mm²

DESIGN SUMMARY

Ultimate bending moment	**9.5 kNm**
Ultimate shear force	**14.2 kN**
Wall effective depth	**152 mm**
Wall effective width	**1000 mm**
Maximum wall height	**2.7 m**
Tensile strength of reinft.	**500 N/mm²**
Mortar designation	**1**
Compressive strength of units	**30 N/mm²**
Area of reinforcement in wall	**452.39 mm²/m**
Diameter of reinforcing bars	**12 mm**

Partial safety factors:

Masonry	**2.3**
Reinforcement strength	**1.15**
Shear strength of masonry	**2**
Bond strength	**1.5**

The design of the concrete base is beyond the scope of this proforma. Brick or block could be used for the earth face leaf.

Location: Ex3 - Block retaining wall

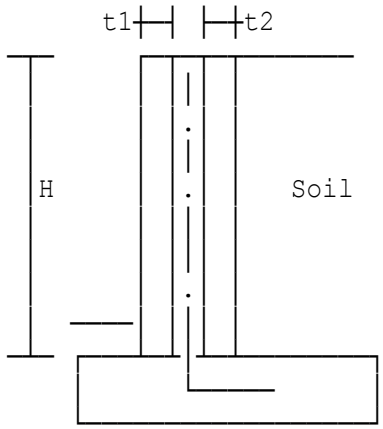

Reinforced masonry retaining wall to

BS5628-2:2005

Cavity to be filled with concrete or grout of C25/30 minimum compressive strength. Cavity width to be a minimum of 100 mm and earth face leaf to be ≥ 100 mm thick. Concrete base design is beyond the scope of this proforma.

Outer skin thickness	t1=140 mm
Earth face skin thickness	t2=100 mm
Wall height	H=3.4 m
Cavity width (minimum 100 mm)	cw=100 mm
Ultimate moment at top of base	Mu=9.5 kNm
Ultimate shear at top of base	Vu=14.2 kN
Mortar designation to Table 1	mortar=1
Masonry type (1=clay 2=cal silicate 3=conc brick 4=block)	typ(1)=4
Height of units	hb=215 mm
Least horiz. dimension of units	lhd=140 mm
Compressive strength of units	po(1)=30 N/mm²
Partial safety factor (reinft.)	gammam=2.3
Characteristic tensile strength	fy=500 N/mm²
Diameter of reinforcing bars	diam=12 mm
Char anchorage bond strength	fb=4.1 N/mm²

DESIGN SUMMARY

Ultimate bending moment	**9.5 kNm**
Ultimate shear force	**14.2 kN**
Wall effective depth	**190 mm**
Wall effective width	**1000 mm**
Maximum wall height	**3.4 m**
Tensile strength of reinft.	**500 N/mm²**
Mortar designation	**1**
Compressive strength of units	**30 N/mm²**
Area of reinforcement in wall	**452.39 mm²/m**
Diameter of reinforcing bars	**12 mm**

Partial safety factors:

Masonry	**2.3**
Reinforcement strength	**1.15**
Shear strength of masonry	**2**
Bond strength	**1.5**

The design of the concrete base is beyond the scope of this proforma. Brick or block could be used for the earth face leaf.

Location: Ex4 - Outer skin blocks laid flat

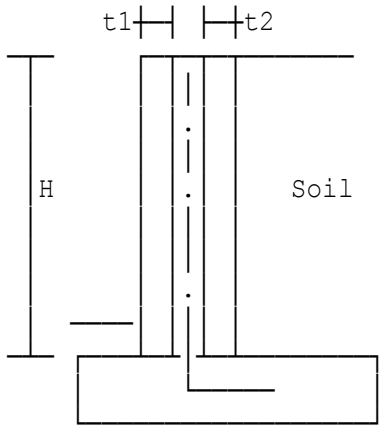

Reinforced masonry retaining wall to

BS5628-2:2005

Cavity to be filled with concrete or grout of C25/30 minimum compressive strength. Cavity width to be a minimum of 100 mm and earth face leaf to be ≥ 100 mm thick. Concrete base design is beyond the scope of this proforma.

Outer skin thickness	t1=215 mm
Earth face skin thickness	t2=100 mm
Wall height	H=4.7 m
Cavity width (minimum 100 mm)	cw=100 mm
Ultimate moment at top of base	Mu=9.5 kNm
Ultimate shear at top of base	Vu=14.2 kN
Mortar designation to Table 1	mortar=1

Masonry type (1=clay 2=cal silicate 3=conc brick 4=block) typ(1)=4

Height of units	hb=215 mm
Least horiz. dimension of units	lhd=215 mm

WARNING:
The height of blocks needs to be reduced.

Location: Ex1 - Wall on grid line A/1-2

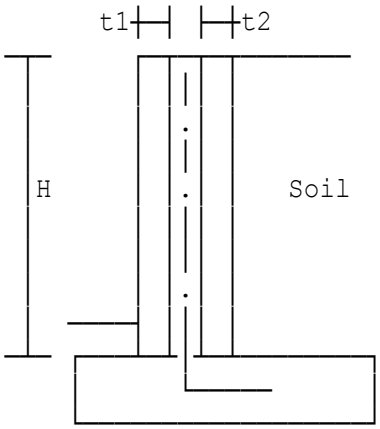

Reinforced masonry retaining wall to EC6

Cavity to be filled with concrete or grout and have a minimum width of 100 mm. Infill to be Grade C25/30 or higher.
The earth face leaf must not be less than 100 mm thick. Group 1 units to be used.
Concrete base design is beyond the scope of this proforma.

Outer leaf thickness	t1=215 mm
Earth face leaf thickness	t2=102 mm
Wall height	H=4.5 m
Cavity width (minimum 100 mm)	cw=100 mm
Design moment at top of base	Md'=20.6 kNm/m
Design shear at top of base	Vd=27 kN/m
Mortar designation to Table NA.2	mortar=2
Masonry type (1=clay 2=cal silicate 3=conc brick 4=block)	typ(1)=1
Compressive strength of units	po(1)=30 N/mm²
Constant K from NA Table NA.4	K(1)=0.5
Height of masonry unit	hu=65 mm
Least horiz. dimension of units	lhd=100 mm
Partial safety factor (masonry)	gamM=2
Characteristic tensile strength	fy=500 N/mm²
Diameter of reinforcing bars	diam=12 mm
Char anchorage bond strength	fbok=4.1 N/mm²

DESIGN SUMMARY

Design bending moment	**20.6 kNm**
Design shear force	**27 kN**
Wall effective depth	**265 mm**
Wall effective width	**1000 mm**
Maximum wall height	**4.5 m**
Tensile strength (reinft)	**500 N/mm²**
Mortar designation	**2**
Compressive strength of units	**30 N/mm²**
Area of steel provided	**565.49 mm²/m**
Diameter of reinforcing bars	**12 mm**

Partial safety factors:

Group 1 masonry units	**2**
Reinforcement strength	**1.15**
Shear strength of masonry	**2**
Bond strength	**1.5**

The design of the concrete base is beyond the scope of this proforma. Brick or block Group 1 units could be used for the earth face leaf. Use masonry units of category I manufacturing

control and of water absorption ≤ 7%.

Location: Ex2 - Brick retaining wall

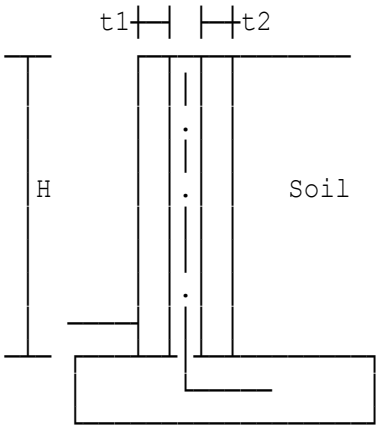

Reinforced masonry retaining wall to EC6

Cavity to be filled with concrete or grout and have a minimum width of 100 mm. Infill to be Grade C25/30 or higher.
The earth face leaf must not be less than 100 mm thick. Group 1 units to be used.
Concrete base design is beyond the scope of this proforma.

Outer leaf thickness	t1=102 mm
Earth face leaf thickness	t2=102 mm
Wall height	H=2.7 m
Cavity width (minimum 100 mm)	cw=100 mm
Design moment at top of base	Md'=9.5 kNm/m
Design shear at top of base	Vd=14.2 kN/m
Mortar designation to Table NA.2	mortar=1
Masonry type (1=clay 2=cal silicate 3=conc brick 4=block)	typ(1)=1
Compressive strength of units	po(1)=30 N/mm²
Constant K from NA Table NA.4	K(1)=0.5
Height of masonry unit	hu=65 mm
Least horiz. dimension of units	lhd=100 mm
Partial safety factor (masonry)	gamM=2.3
Characteristic tensile strength	fy=500 N/mm²
Diameter of reinforcing bars	diam=12 mm
Char anchorage bond strength	fbok=4.1 N/mm²

DESIGN SUMMARY

Design bending moment	**9.5 kNm**
Design shear force	**14.2 kN**
Wall effective depth	**152 mm**
Wall effective width	**1000 mm**
Maximum wall height	**2.7 m**
Tensile strength (reinft)	**500 N/mm²**
Mortar designation	**1**
Compressive strength of units	**30 N/mm²**
Area of steel provided	**452.39 mm²/m**
Diameter of reinforcing bars	**12 mm**

Partial safety factors:

Group 1 masonry units	**2.3**
Reinforcement strength	**1.15**
Shear strength of masonry	**2**
Bond strength	**1.5**

The design of the concrete base is beyond the scope of this proforma. Brick or block Group 1 units could be used for the earth face leaf.

Location: Ex3 - Block retaining wall

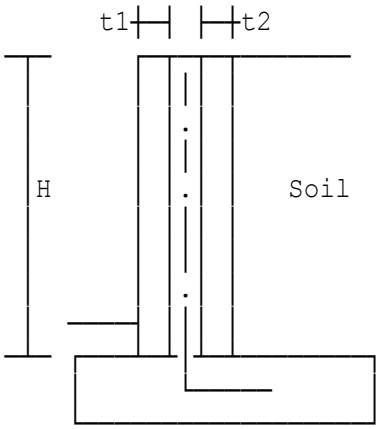

Reinforced masonry retaining wall to EC6

Cavity to be filled with concrete or grout and have a minimum width of 100 mm. Infill to be Grade C25/30 or higher.
The earth face leaf must not be less than 100 mm thick. Group 1 units to be used.
Concrete base design is beyond the scope of this proforma.

Outer leaf thickness	t1=140 mm
Earth face leaf thickness	t2=100 mm
Wall height	H=3.4 m
Cavity width (minimum 100 mm)	cw=100 mm
Design moment at top of base	Md'=9.5 kNm/m
Design shear at top of base	Vd=14.2 kN/m
Mortar designation to Table NA.2	mortar=1
Masonry type (1=clay 2=cal silicate 3=conc brick 4=block)	typ(1)=4
Compressive strength of units	po(1)=30 N/mm²
Constant K from NA Table NA.4	K(1)=0.75
Height of masonry unit	hu=215 mm
Least horiz. dimension of units	lhd=140 mm
Partial safety factor (masonry)	gamM=2.3
Characteristic tensile strength	fy=500 N/mm²
Diameter of reinforcing bars	diam=12 mm
Char anchorage bond strength	fbok=4.1 N/mm²

DESIGN SUMMARY

Design bending moment	**9.5 kNm**
Design shear force	**14.2 kN**
Wall effective depth	**190 mm**
Wall effective width	**1000 mm**
Maximum wall height	**3.4 m**
Tensile strength (reinft)	**500 N/mm²**
Mortar designation	**1**
Compressive strength of units	**30 N/mm²**
Area of steel provided	**452.39 mm²/m**
Diameter of reinforcing bars	**12 mm**

Partial safety factors:

Group 1 masonry units	**2.3**
Reinforcement strength	**1.15**
Shear strength of masonry	**2**
Bond strength	**1.5**

The design of the concrete base is beyond the scope of this proforma. Brick or block Group 1 units could be used for the earth face leaf.

Location: Ex4 - Outer skin blocks laid flat

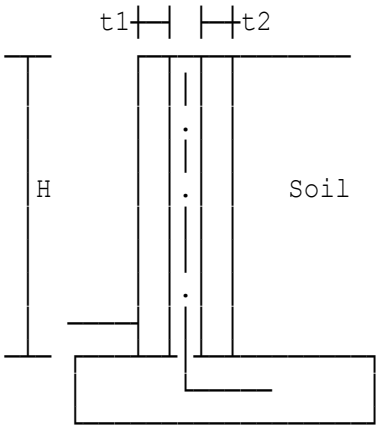

Reinforced masonry retaining wall to EC6

Cavity to be filled with concrete or grout and have a minimum width of 100 mm. Infill to be Grade C25/30 or higher.
The earth face leaf must not be less than 100 mm thick. Group 1 units to be used.
Concrete base design is beyond the scope of this proforma.

Outer leaf thickness	t1=215 mm
Earth face leaf thickness	t2=100 mm
Wall height	H=4.7 m
Cavity width (minimum 100 mm)	cw=100 mm
Design moment at top of base	Md'=9.5 kNm/m
Design shear at top of base	Vd=14.2 kN/m
Mortar designation to Table NA.2	mortar=1
Masonry type (1=clay 2=cal silicate 3=conc brick 4=block)	typ(1)=4
Compressive strength of units	po(1)=30 N/mm²
Constant K from NA Table NA.4	K(1)=0.75
Height of masonry unit	hu=100 mm
Least horiz. dimension of units	lhd=215 mm
Partial safety factor (masonry)	gamM=2.3
Characteristic tensile strength	fy=500 N/mm²
Diameter of reinforcing bars	diam=12 mm
Char anchorage bond strength	fbok=4.1 N/mm²

DESIGN SUMMARY

Design bending moment	**9.5 kNm**
Design shear force	**14.2 kN**
Wall effective depth	**265 mm**
Wall effective width	**1000 mm**
Maximum wall height	**4.7 m**
Tensile strength (reinft)	**500 N/mm²**
Mortar designation	**1**
Compressive strength of units	**30 N/mm²**
Area of steel provided	**452.39 mm²/m**
Diameter of reinforcing bars	**12 mm**

Partial safety factors:

Group 1 masonry units	**2.3**
Reinforcement strength	**1.15**
Shear strength of masonry	**2**
Bond strength	**1.5**

The design of the concrete base is beyond the scope of this proforma. Brick or block Group 1 units could be used for the earth face leaf.

Location: Ex5 - Pocket-Type ret. wall (Ex R1 by J Roberts w. links)

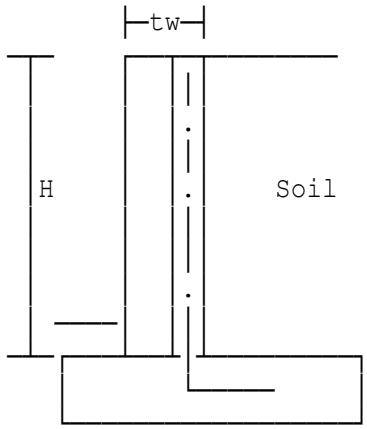

Reinforced masonry pocket-type retaining wall to EC6

Formed vertical voids (pockets) to be filled with concrete or grout. Infill Grade to be C25/30 or higher. Pockets must be at least 100 mm deep formed in Group 1 units. Concrete base design is beyond the scope of this proforma.

Wall thickness	tw=328 mm
Wall height	H=3.65 m
Design moment at top of base	Md'=97.24 kNm/m
Design shear at top of base	Vd=71.85 kN/m
Pocket depth	pd=113 mm
Pocket width along wall length	pw=235 mm
Pocket spacing	ps=900 mm
Effective depth to be used	d=271.5 mm
Mortar designation to Table NA.2	mortar=1
Compressive strength of units	po(1)=50 N/mm²
Constant K from NA Table NA.4	K(1)=0.5
Height of masonry unit	hu=65 mm
Least horiz. dimension of units	lhd=100 mm
Partial safety factor (masonry)	gamM=2
Characteristic tensile strength	fy=500 N/mm²
Diameter of reinforcing bars	diam=25 mm
Spacing (<0.75d & <300mm)	sv=200 mm
Char tensile strength of links	fy'=200 N/mm²
Diameter of shear links	Ds=6 mm
Number of link legs	nleg=2
Char anchorage bond strength	fbok=3.4 N/mm²

DESIGN SUMMARY

Design bending moment	**97.24 kNm**
Design shear force	**71.85 kN**
Wall effective depth	**271.5 mm**
Wall effective width	**900 mm**
Maximum wall height	**3.65 m**
Tensile strength (reinft)	**500 N/mm²**
Mortar designation	**1**
Compressive strength of units	**50 N/mm²**
Area of steel provided	**981.75 mm²/m**
Diameter of reinforcing bars	**25 mm**

Partial safety factors:

Group 1 masonry units	**2**
Reinforcement strength	**1.15**
Shear strength of masonry	**2**
Bond strength	**1.5**

Provide closed shear links of 6 mm diameter at pocket positions at 200 mm vertical centres.
The design of the concrete base is beyond the scope of this proforma.
Use masonry units of category I manufacturing control and of water absorption ≤ 7%.

Location: Ex6 - Pocket-Type R.Wall (Ex 11.2 IMS Publ. no links)

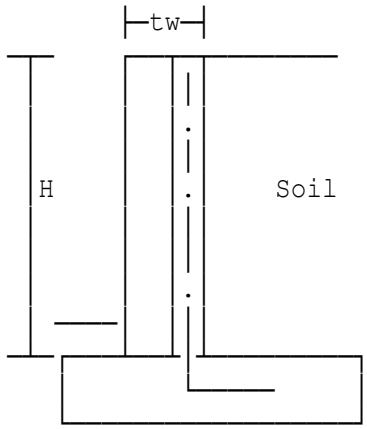

Reinforced masonry pocket-type retaining wall to EC6

Formed vertical voids (pockets) to be filled with concrete or grout. Infill Grade to be C25/30 or higher. Pockets must be at least 100 mm deep formed in Group 1 units. Concrete base design is beyond the scope of this proforma.

Wall thickness	tw=440 mm
Wall height	H=4 m
Design moment at top of base	Md'=107.62 kNm/m
Design shear at top of base	Vd=73.63 kN/m
Pocket depth	pd=112.5 mm
Pocket width along wall length	pw=235 mm
Pocket spacing	ps=900 mm
Effective depth to be used	d=383.75 mm
Mortar designation to Table NA.2	mortar=2
Compressive strength of units	po(1)=35 N/mm²
Constant K from NA Table NA.4	K(1)=0.5
Height of masonry unit	hu=65 mm
Least horiz. dimension of units	lhd=100 mm
Partial safety factor (masonry)	gamM=2.3
Characteristic tensile strength	fy=500 N/mm²
Diameter of reinforcing bars	diam=25 mm
Char anchorage bond strength	fbok=3.4 N/mm²

DESIGN SUMMARY

Design bending moment	**107.62 kNm**
Design shear force	**73.63 kN**
Wall effective depth	**383.75 mm**
Wall effective width	**900 mm**
Maximum wall height	**4 m**
Tensile strength (reinft)	**500 N/mm²**
Mortar designation	**2**
Compressive strength of units	**35 N/mm²**
Area of steel provided	**981.75 mm²/m**
Diameter of reinforcing bars	**25 mm**
Partial safety factors:	
Group 1 masonry units	**2.3**
Reinforcement strength	**1.15**
Shear strength of masonry	**2**
Bond strength	**1.5**

The design of the concrete base is beyond the scope of this proforma.

Location: Example 4 Structural masonry designers manual, 2nd ed.

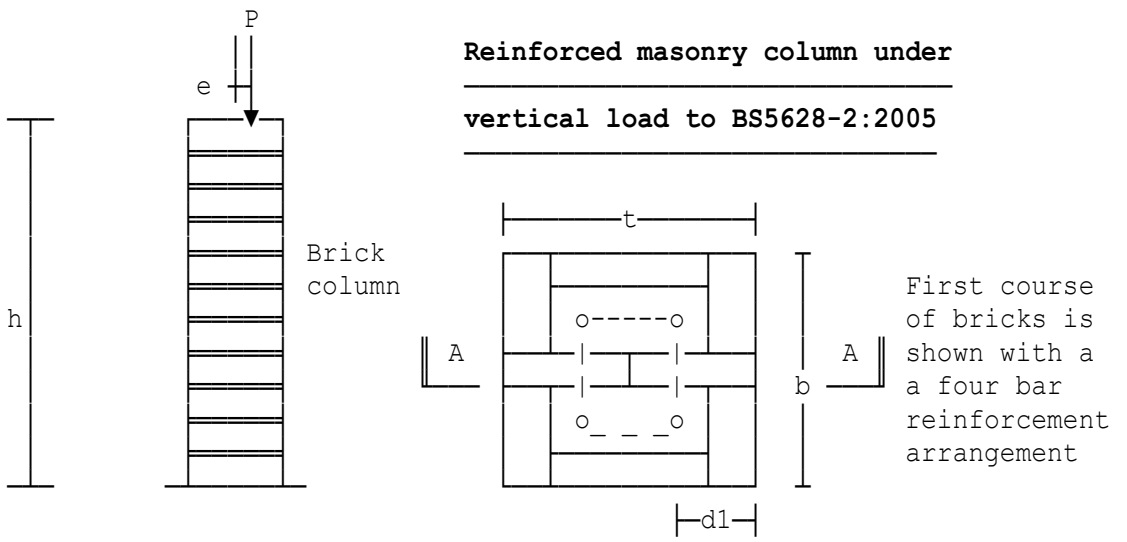

Section A-A

t = thickness of column in plane of bending
d1 = distance to comp. reinft. from col. face

Thickness of column	t=440 mm
Width of column	b=440 mm
Height of column	h=7000 mm
Support Restraint factor	rf=1
Ultimate vertical load	P=650 kN
Ultimate weight of column	cwc=8 kN
Load eccentricity	e=0 mm
Compressive strength of units	Sunits=20 N/mm²
Mortar designation	mortd=2
Char tensile strength of reinft	fy=500 N/mm²
Partial safety factor	gammam=2.3
Diameter of reinforcing bars	diam=25 mm
Total number of bars to be used	Bars=4
column compression face	d1=130 mm

DESIGN SUMMARY	**Ultimate vertical load**	**658 kN**
	Ultimate vertical load capacity	**793.52 kN**
	Column depth	**440 mm**
	Column width	**440 mm**
	Column height	**7000 mm**
	Area of reinft to be provided	**1963.5 mm²**
	Diameter of reinforcing bars	**25 mm**
	No of bars to be used	**4**
	Tensile strength of reinft	**500 N/mm²**
	Mortar designation	**2**
	Compressive strength of units	**20 N/mm²**
	Mortar designation	**2**
	Partial safety factors:	
	Masonry	**2.3**
	Reinforcement	**1.15**

Location: Example 3 Handbook to BS5628-2:Section 2

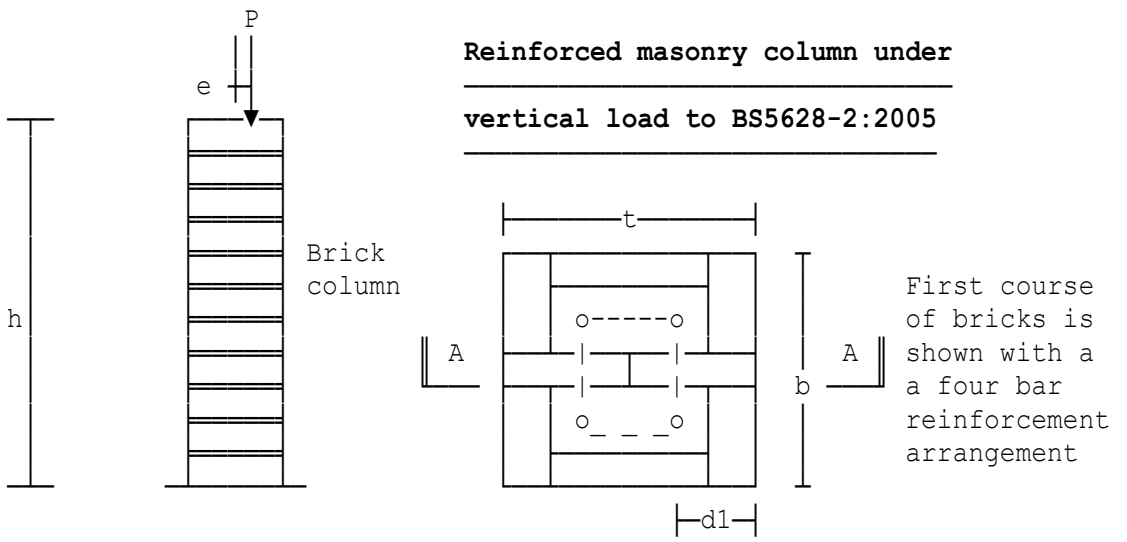

Section A-A

t = thickness of column in plane of bending
d1 = distance to comp. reinft. from col. face

Thickness of column	t=553 mm
Width of column	b=553 mm
Height of column	h=3000 mm
Support Restraint factor	rf=1
Ultimate vertical load	P=1100 kN
Ultimate weight of column	cwc=0 kN
Load eccentricity	e=0 mm
Compressive strength of units	Sunits=20 N/mm²
Mortar designation	mortd=2
Char tensile strength of reinft	fy=500 N/mm²
Partial safety factor	gammam=2.3
Diameter of reinforcing bars	diam=16 mm

DESIGN SUMMARY	**Ultimate vertical load**	**1100 kN**
	Column depth	**553 mm**
	Column width	**553 mm**
	Column height	**3000 mm**
	Area of reinft to be provided	**1005.3 mm²**
	Diameter of reinforcing bars	**16 mm**
	No of bars to be used	**5**
	Tensile strength of reinft	**500 N/mm²**
	Mortar designation	**2**
	Compressive strength of units	**20 N/mm²**
	Mortar designation	**2**
	Partial safety factors:	
	Masonry	**2.3**
	Reinforcement	**1.15**

Location: Example 4 Handbook to BS5628-2:Section 2

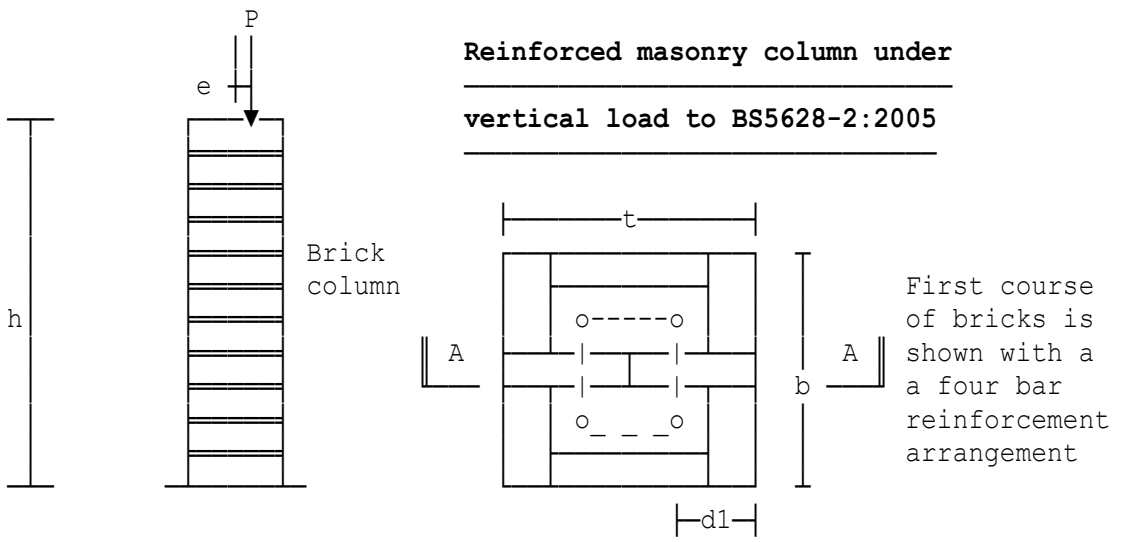

Section A-A

t = thickness of column in plane of bending
d1 = distance to comp. reinft. from col. face

Thickness of column	t=440 mm
Width of column	b=440 mm
Height of column	h=6000 mm
Support Restraint factor	rf=1
Ultimate vertical load	P=714 kN
Ultimate weight of column	cwc=0 kN
Load eccentricity	e=0 mm
Compressive strength of units	Sunits=30 N/mm²
Mortar designation	mortd=2
Char tensile strength of reinft	fy=500 N/mm²
Partial safety factor	gammam=2.3
Diameter of reinforcing bars	diam=25 mm
Total number of bars to be used	Bars=4
column compression face	d1=150 mm

DESIGN SUMMARY	**Ultimate vertical load**	**714 kN**
	Ultimate vertical load capacity	**924.75 kN**
	Column depth	**440 mm**
	Column width	**440 mm**
	Column height	**6000 mm**
	Area of reinft to be provided	**1963.5 mm²**
	Diameter of reinforcing bars	**25 mm**
	No of bars to be used	**4**
	Tensile strength of reinft	**500 N/mm²**
	Mortar designation	**2**
	Compressive strength of units	**30 N/mm²**
	Mortar designation	**2**
	Partial safety factors:	
	Masonry	**2.3**
	Reinforcement	**1.15**

Location: R3 Example 4 by J Roberts (Hollow Concrete Block column)

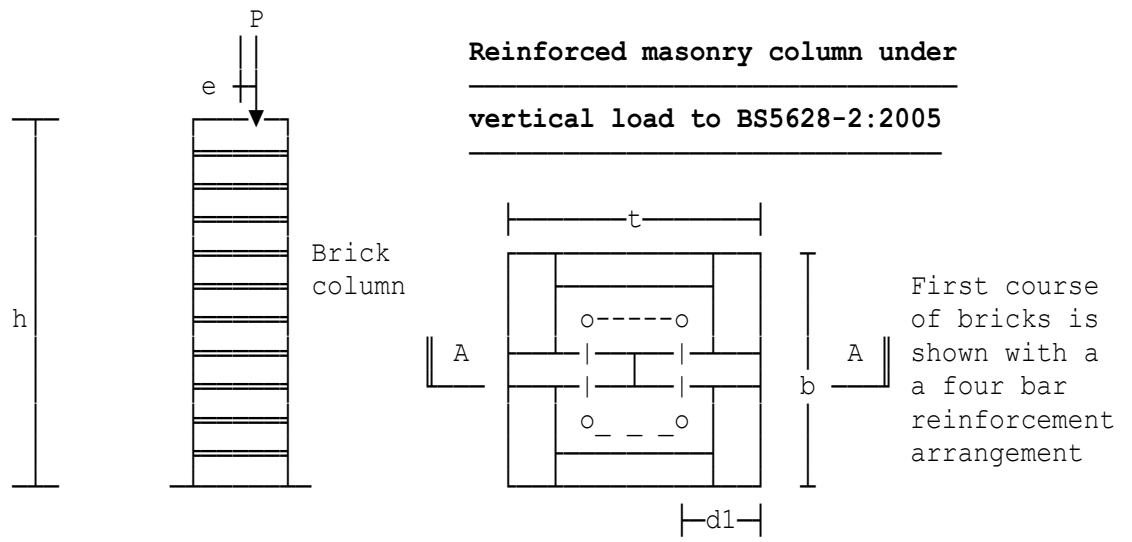

Section A-A t = thickness of column in plane of bending
d1 = distance to comp. reinft. from col. face

Thickness of column	t=440 mm
Width of column	b=440 mm
Height of column	h=6000 mm
Support Restraint factor	rf=1
Ultimate vertical load	P=400 kN
Ultimate weight of column	cwc=0 kN
Load eccentricity	e=112.5 mm
Compressive strength of units	Sunits=30 N/mm²
Mortar designation	mortd=2
Char tensile strength of reinft	fy=500 N/mm²
Partial safety factor	gammam=2
Diameter of reinforcing bars	diam=25 mm
Total number of bars to be used	Bars=4
column compression face	d1=107.5 mm

DESIGN SUMMARY	**Ultimate vertical load**	**400 kN**
	Ultimate vertical load capacity	**916.6 kN**
	Column depth	**440 mm**
	Column width	**440 mm**
	Column height	**6000 mm**
	Area of reinft to be provided	**1963.5 mm²**
	Diameter of reinforcing bars	**25 mm**
	No of bars to be used	**4**
	Tensile strength of reinft	**500 N/mm²**
	Mortar designation	**2**
	Compressive strength of units	**30 N/mm²**
	Mortar designation	**2**
	Partial safety factors:	
	Masonry	**2**
	Reinforcement	**1.15**

Location: Example 5

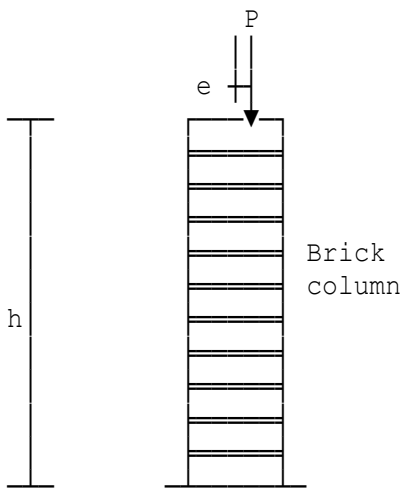

Reinforced masonry column under vertical load to BS5628-2:2005

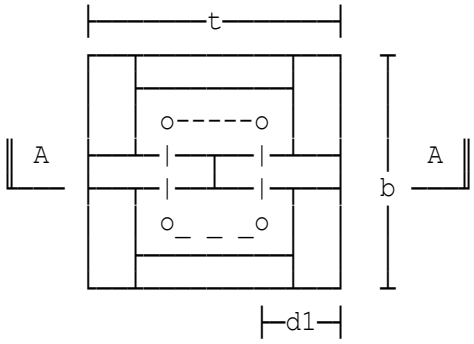

First course of bricks is shown with a a four bar reinforcement arrangement

Section A-A

t = thickness of column in plane of bending
d1 = distance to comp. reinft. from col. face

Thickness of column	t=440 mm
Width of column	b=440 mm
Height of column	h=6000 mm
Support Restraint factor	rf=1
Ultimate vertical load	P=430 kN
Ultimate weight of column	cwc=9.5 kN
Load eccentricity	e=80 mm
Compressive strength of units	Sunits=20 N/mm²
Mortar designation	mortd=2
Char tensile strength of reinft	fy=500 N/mm²
Partial safety factor	gammam=2.3
Diameter of reinforcing bars	diam=25 mm
Total number of bars to be used	Bars=4
column compression face	d1=130 mm

DESIGN SUMMARY	**Ultimate vertical load**	**439.5 kN**
	Ultimate vertical load capacity	**686.39 kN**
	Column depth	**440 mm**
	Column width	**440 mm**
	Column height	**6000 mm**
	Area of reinft to be provided	**1963.5 mm²**
	Diameter of reinforcing bars	**25 mm**
	No of bars to be used	**4**
	Tensile strength of reinft	**500 N/mm²**
	Mortar designation	**2**
	Compressive strength of units	**20 N/mm²**
	Mortar designation	**2**
	Partial safety factors:	
	Masonry	**2.3**
	Reinforcement	**1.15**

Location: Example 4 Structural masonry designers manual, 2nd ed.

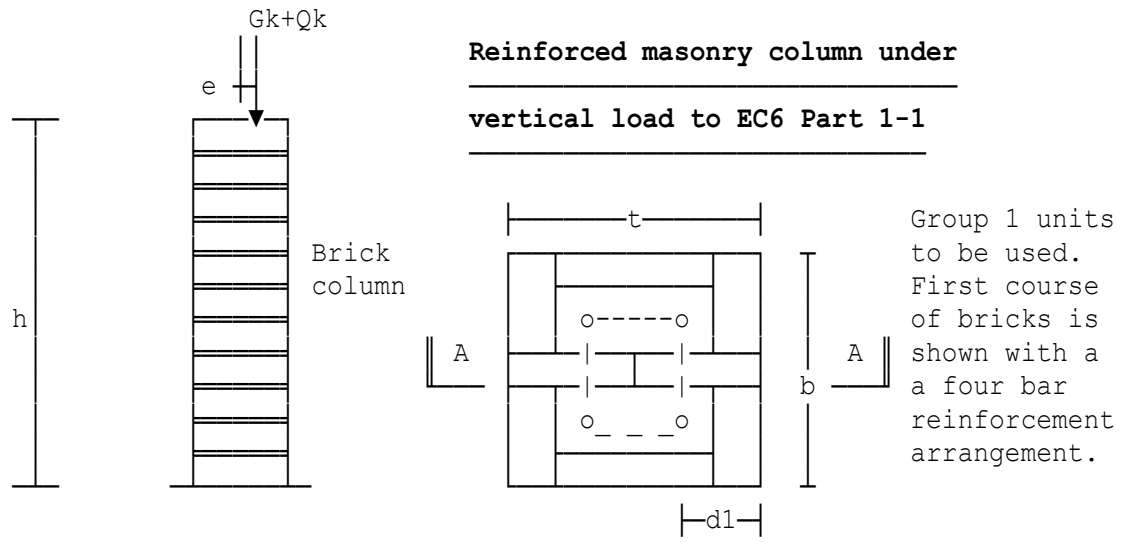

Section A-A

t = thickness of column in plane of bending
d1 = distance to comp. reinft. from col. face

Thickness of column	t=440 mm
Width of column	b=440 mm
Height of column	h=7000 mm
Support restraint factor	rf=1
Permanent vertical load	Gk=250 kN
Variable vertical load	Qk=196 kN
Column self weight	Gksw=8 kN
Load eccentricity	e=0 mm
Partial safety factor (masonry)	gamM=2.3
Char tensile strength of reinft.	fy=500 N/mm²
Mortar designation (Table NA.2)	mortar=2
Compressive strength of units	po=20 N/mm²
Constant K from NA Table NA.4	K(1)=0.5
Height of masonry unit	hu=65 mm
Least horiz. dimension of units	lhd=100 mm
Diameter of reinforcing bars	diam=25 mm
Total number of bars to be used	Bars=4
column compression face	d1=130 mm
Link diameter	diaml=6

DESIGN SUMMARY	**Design vertical load**	**642.3 kN**
	Design vertical load resistance	**723.1 kN**
	Column depth	**440 mm**
	Column width	**440 mm**
	Column height	**7000 mm**
	Area of reinft to be provided	**1963.5 mm²**
	Diameter of reinforcing bars	**25 mm**
	No of bars to be used	**4**
	Tensile strength of reinft	**500 N/mm²**
	Compressive strength of units	**20 N/mm²**
	Mortar designation	**2**
	Partial safety factors:	
	Masonry	**2.3**
	Reinforcement	**1.15**
	Masonry units to be Group 1 (i.e. solid)	

Location: Example 3 Handbook to BS5628-2:Section 2

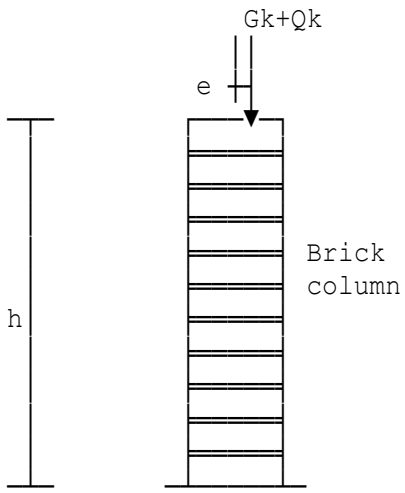

Reinforced masonry column under vertical load to EC6 Part 1-1

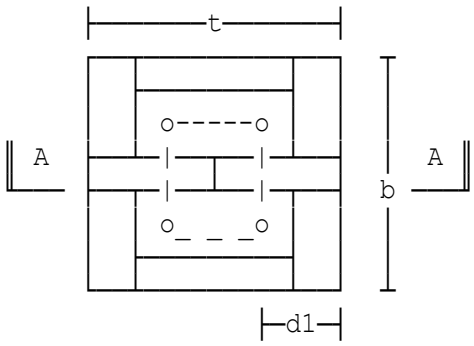

Group 1 units to be used. First course of bricks is shown with a a four bar reinforcement arrangement.

Section A-A

t = thickness of column in plane of bending
d1 = distance to comp. reinft. from col. face

Thickness of column	t=553 mm
Width of column	b=553 mm
Height of column	h=3000 mm
Support restraint factor	rf=1
Permanent vertical load	Gk=600 kN
Variable vertical load	Qk=193 kN
Column self weight	Gksw=0 kN
Load eccentricity	e=0 mm
Partial safety factor (masonry)	gamM=2.3
Char tensile strength of reinft.	fy=500 N/mm²
Mortar designation (Table NA.2)	mortar=2
Compressive strength of units	po=20 N/mm²
Constant K from NA Table NA.4	K(1)=0.5
Height of masonry unit	hu=65 mm
Least horiz. dimension of units	lhd=100 mm
Diameter of reinforcing bars	diam=16 mm
Link diameter	diaml=6

DESIGN SUMMARY	**Design vertical load**	**1099.5 kN**
	Column depth	**553 mm**
	Column width	**553 mm**
	Column height	**3000 mm**
	Area of reinft to be provided	**804.25 mm²**
	Diameter of reinforcing bars	**16 mm**
	No of bars to be used	**4**
	Tensile strength of reinft	**500 N/mm²**
	Compressive strength of units	**20 N/mm²**
	Mortar designation	**2**
	Partial safety factors:	
	Masonry	**2.3**
	Reinforcement	**1.15**
	Masonry units to be Group 1 (i.e. solid)	

Location: Example 4 Handbook to BS5628-2:Section 2

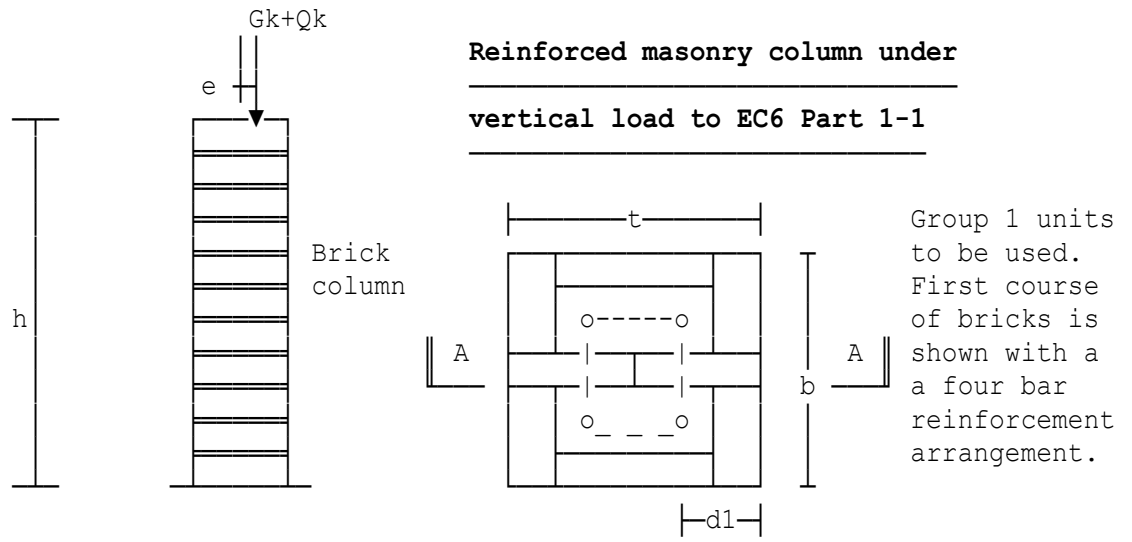

Section A-A

t = thickness of column in plane of bending
d1 = distance to comp. reinft. from col. face

Thickness of column	t=440 mm
Width of column	b=440 mm
Height of column	h=6000 mm
Support restraint factor	rf=1
Permanent vertical load	Gk=200 kN
Variable vertical load	Qk=296 kN
Column self weight	Gksw=0 kN
Load eccentricity	e=0 mm
Partial safety factor (masonry)	gamM=2.3
Char tensile strength of reinft.	fy=500 N/mm²
Mortar designation (Table NA.2)	mortar=2
Compressive strength of units	po=30 N/mm²
Constant K from NA Table NA.4	K(1)=0.5
Height of masonry unit	hu=65 mm
Least horiz. dimension of units	lhd=100 mm
Diameter of reinforcing bars	diam=25 mm
Total number of bars to be used	Bars=4
column compression face	d1=150 mm
Link diameter	diaml=6

DESIGN SUMMARY	**Design vertical load**	**714 kN**
	Design vertical load resistance	**812.55 kN**
	Column depth	**440 mm**
	Column width	**440 mm**
	Column height	**6000 mm**
	Area of reinft to be provided	**1963.5 mm²**
	Diameter of reinforcing bars	**25 mm**
	No of bars to be used	**4**
	Tensile strength of reinft	**500 N/mm²**
	Compressive strength of units	**30 N/mm²**
	Mortar designation	**2**
	Partial safety factors:	
	Masonry	**2.3**
	Reinforcement	**1.15**
	Masonry units to be Group 1 (i.e. solid)	

Location: R3 Example 4 by J Roberts (Hollow Concrete Block column)

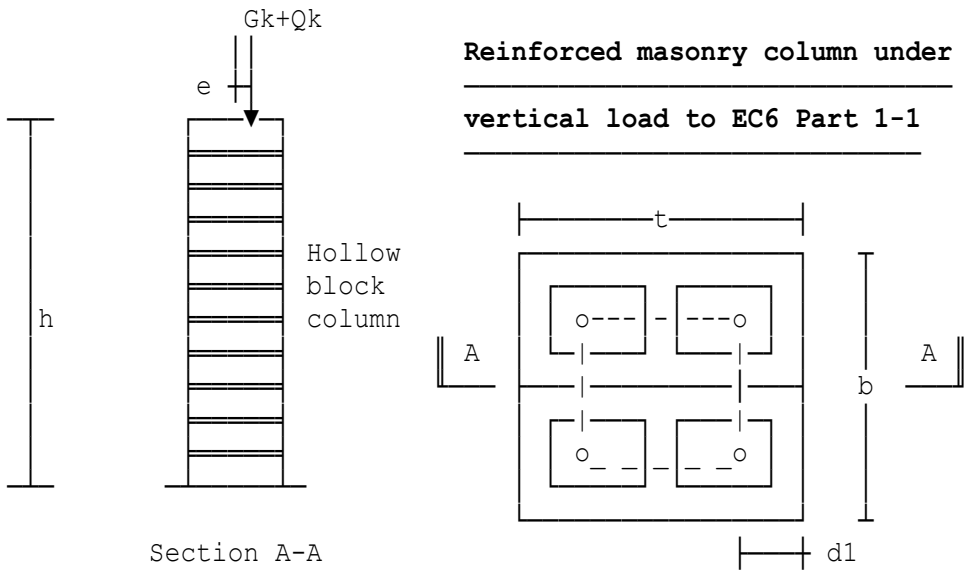

Thickness of column	t=440 mm
Width of column	b=440 mm
Height of column	h=6000 mm
Support restraint factor	rf=1
Permanent vertical load	Gk=0 kN
Variable vertical load	Qk=266.67 kN
Column self weight	Gksw=0 kN
Load eccentricity	e=112.5 mm
Partial safety factor (masonry)	gamM=2
Char tensile strength of reinft.	fy=500 N/mm²
Mortar designation (Table NA.2)	mortar=2
Compressive strength of units	po=10.4 N/mm²
Percentage of solid masonry	psm=65 %
Diameter of reinforcing bars	diam=25 mm
Total number of bars to be used	Bars=4
column compression face	d1=107.5 mm
Link diameter	diaml=6
Concrete cover to reinforcement	cover=25 mm

DESIGN SUMMARY	**Design vertical load**	**400.01 kN**
	Design vertical load resistance	**871.89 kN**
	Column depth	**440 mm**
	Column width	**440 mm**
	Column height	**6000 mm**
	Area of reinft to be provided	**1963.5 mm²**
	Diameter of reinforcing bars	**25 mm**
	No of bars to be used	**4**
	Tensile strength of reinft	**500 N/mm²**
	Compressive strength of units	**10.4 N/mm²**
	Mortar designation	**2**
	Partial safety factors:	
	Masonry	**2**
	Reinforcement	**1.15**

Location: Example 5

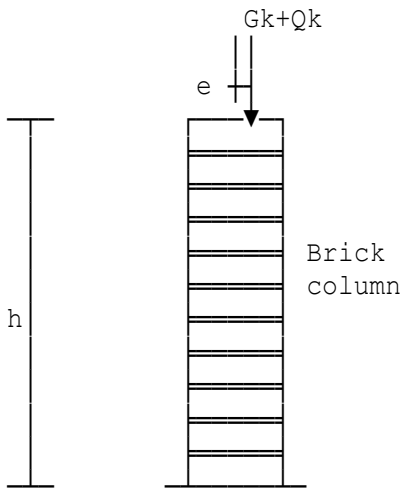

Reinforced masonry column under vertical load to EC6 Part 1-1

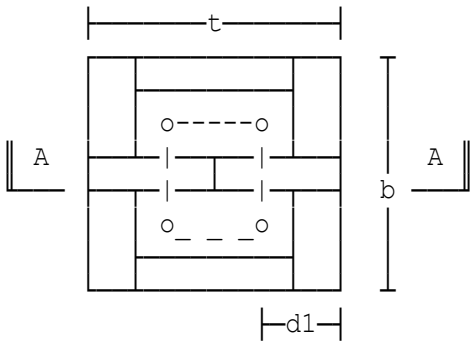

Group 1 units to be used. First course of bricks is shown with a a four bar reinforcement arrangement.

Section A-A

t = thickness of column in plane of bending
d1 = distance to comp. reinft. from col. face

Thickness of column	t=440 mm
Width of column	b=440 mm
Height of column	h=6000 mm
Support restraint factor	rf=1
Permanent vertical load	Gk=20 kN
Variable vertical load	Qk=266 kN
Column self weight	Gksw=10 kN
Load eccentricity	e=80 mm
Partial safety factor (masonry)	gamM=2.3
Char tensile strength of reinft.	fy=500 N/mm²
Mortar designation (Table NA.2)	mortar=2
Compressive strength of units	po=20 N/mm²
Constant K from NA Table NA.4	K(1)=0.5
Height of masonry unit	hu=65 mm
Least horiz. dimension of units	lhd=100 mm
Diameter of reinforcing bars	diam=25 mm
Total number of bars to be used	Bars=4
column compression face	d1=130 mm
Link diameter	diaml=6

DESIGN SUMMARY	**Design vertical load**	**439.5 kN**
	Design vertical load resistance	**723.1 kN**
	Column depth	**440 mm**
	Column width	**440 mm**
	Column height	**6000 mm**
	Area of reinft to be provided	**1963.5 mm²**
	Diameter of reinforcing bars	**25 mm**
	No of bars to be used	**4**
	Tensile strength of reinft	**500 N/mm²**
	Compressive strength of units	**20 N/mm²**
	Mortar designation	**2**
	Partial safety factors:	
	Masonry	**2.3**
	Reinforcement	**1.15**
	Masonry units to be Group 1 (i.e. solid)	

Location: Problem 1 in Orton's paper 'Structural Design of Masonry'

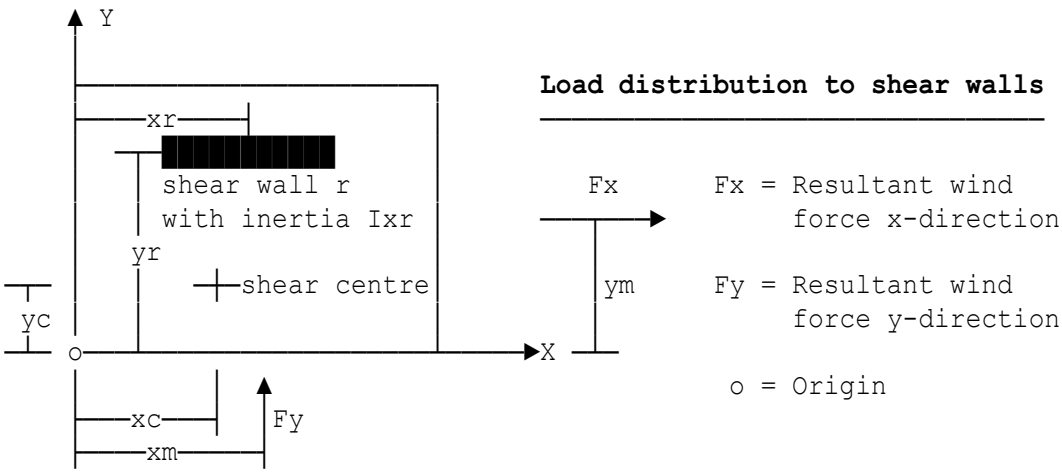

Number of walls resisting movement in x-dirn nx=4
Number of walls resisting movement in y-dirn ny=2

Resultant wind force in x-direct. (unfactored) Fx=20.82 kN
Distance of this force from the origin ym=3.5 m
Resultant wind force in y-direct. (unfactored) Fy=0 kN

Resistance of walls in x-direction

Wall 1

Inertia of wall to resist force in x-direction Ix(i)=0.8 m^4
Dist.from origin to centroid of wall in y-dir. y(1)=7 m

Wall 2

Inertia of wall to resist force in x-direction Ix(i)=0.3375 m^4
Dist.from origin to centroid of wall in y-dir. y(2)=0 m

Wall 3

Inertia of wall to resist force in x-direction Ix(i)=0.0125 m^4
Dist.from origin to centroid of wall in y-dir. y(3)=4 m

Wall 4

Inertia of wall to resist force in x-direction Ix(i)=0.0125 m^4
Dist.from origin to centroid of wall in y-dir. y(4)=4 m

Resistance of walls in y-direction

Wall 1

Inertia of wall to resist force in y-direction Iy(i)=0.0125 m^4
Dist.from origin to centroid of wall in x-dir. x(1)=0 m

Wall 2

Inertia of wall to resist force in y-direction Iy(i)=0.0125 m^4
Dist.from origin to centroid of wall in x-dir. x(2)=4 m

RESULTS

Eccentricity of force Fx from shear centre ey=ym-yc=-1.4032 m

Load resistance of individual walls in x-direction

```
Wall 1 :
  Load resistance
  Proportion of total force resisted by this wall px(1)=fx(i)/Fx*100
                                                      =48.788 %
  Since torsional component reduces calculated load resistance of this
  wall component, Orton suggests this term be ignored. If this is done,
  Load resistance                fx(1)=Fx*Ix(i)/sigIxr=14.328 kN
  Proportion of total force resisted by this wall px(1)=fx(i)/Fx*100
                                                      =68.817 %
Wall 2 :
  Load resistance
  Proportion of total force resisted by this wall px(2)=fx(i)/Fx*100
                                                      =48.792 %
Wall 3 :
  Load resistance
  Proportion of total force resisted by this wall px(3)=fx(i)/Fx*100
                                                      =1.2101 %
Wall 4 :
  Load resistance
  Proportion of total force resisted by this wall px(4)=fx(i)/Fx*100
                                                      =1.2101 %
```

Load resistance of individual walls in y-direction

```
Wall 1 :
  Load resistance
Wall 2 :
  Load resistance
```

NOTE: Negative value indicates force on wall acts in opposite direction to that of applied wind load.

Location: Option 2 with calculation of inertias from wall dimensions

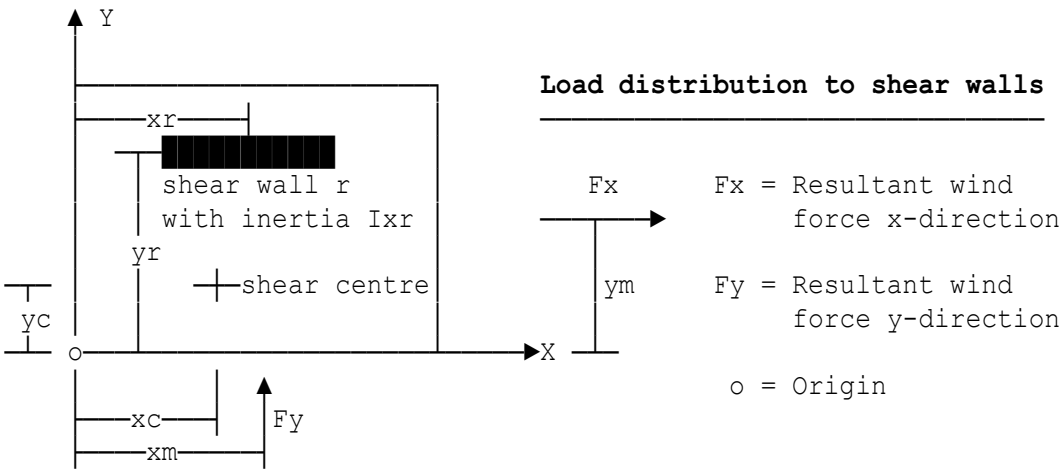

Number of walls resisting movement in x-dirn nx=4
Number of walls resisting movement in y-dirn ny=4

Resultant wind force in x-direct. (unfactored) Fx=50 kN
Distance of this force from the origin ym=3 m
Resultant wind force in y-direct. (unfactored) Fy=30 kN
Distance of this force from the origin xm=9 m

Resistance of walls in x-direction

Wall 1

Inertia of wall to resist force in x-direction Ix(i)=1 m^4
Dist.from origin to centroid of wall in y-dir. y(1)=0.5 m

Wall 2

Inertia of wall to resist force in x-direction Ix(i)=42.667 m^4
Dist.from origin to centroid of wall in y-dir. y(2)=6 m

Wall 3

Inertia of wall to resist force in x-direction Ix(i)=42.667 m^4
Dist.from origin to centroid of wall in y-dir. y(3)=11.5 m

Wall 4

Inertia of wall to resist force in x-direction Ix(i)=1 m^4
Dist.from origin to centroid of wall in y-dir. y(4)=11.5 m

Resistance of walls in y-direction

Wall 1

Inertia of wall to resist force in y-direction Iy(i)=144 m^4
Dist.from origin to centroid of wall in x-dir. x(1)=6 m

Wall 2

Inertia of wall to resist force in y-direction Iy(i)=0.66667 m^4
Dist.from origin to centroid of wall in x-dir. x(2)=0.5 m

Wall 3

Inertia of wall to resist force in y-direction Iy(i)=0.66667 m^4
Dist.from origin to centroid of wall in x-dir. x(3)=11.5 m

Wall 4

Inertia of wall to resist force in y-direction Iy(i)=144 m^4
Dist.from origin to centroid of wall in x-dir. x(4)=6 m

RESULTS

Eccentricity of force Fx from shear centre ey=ym-yc=-5.687 m
Eccentricity of force Fy from shear centre ex=xm-xc=3 m

Load resistance of individual walls in x-direction

Wall 1 :
Load resistance
Proportion of total force resisted by this wall px(1)=fx(i)/Fx*100
=5.3271 %

Wall 2 :
Load resistance
Proportion of total force resisted by this wall px(2)=fx(i)/Fx*100
=107.42 %

Wall 3 :
Load resistance
Proportion of total force resisted by this wall px(3)=fx(i)/Fx*100
=-12.453 %
Note: Negative value indicates force on wall acts in opposite direction to that of applied wind load.

Wall 4 :
Load resistance
Proportion of total force resisted by this wall px(4)=fx(i)/Fx*100
=-0.29187 %
Note: Negative value indicates force on wall acts in opposite direction to that of applied wind load.

Load resistance of individual walls in y-direction

```
Wall 1 :
  Load resistance
  Proportion of total force resisted by this wall py(1)=fy(i)/Fy*100
                                                      =49.77 %
Wall 2 :
  Load resistance
  Proportion of total force resisted by this wall py(2)=fy(i)/Fy*100
                                                      =3.3521 %
Wall 3 :
  Load resistance
  Proportion of total force resisted by this wall py(3)=fy(i)/Fy*100
                                                      =-2.8912 %

NOTE:  Negative value indicates force on wall acts in opposite
direction to that of applied wind load.
Wall 4 :
  Load resistance
  Proportion of total force resisted by this wall py(4)=fy(i)/Fy*100
                                                      =49.77 %
```

Location: Ex3 - Demonstrates Option 1 input

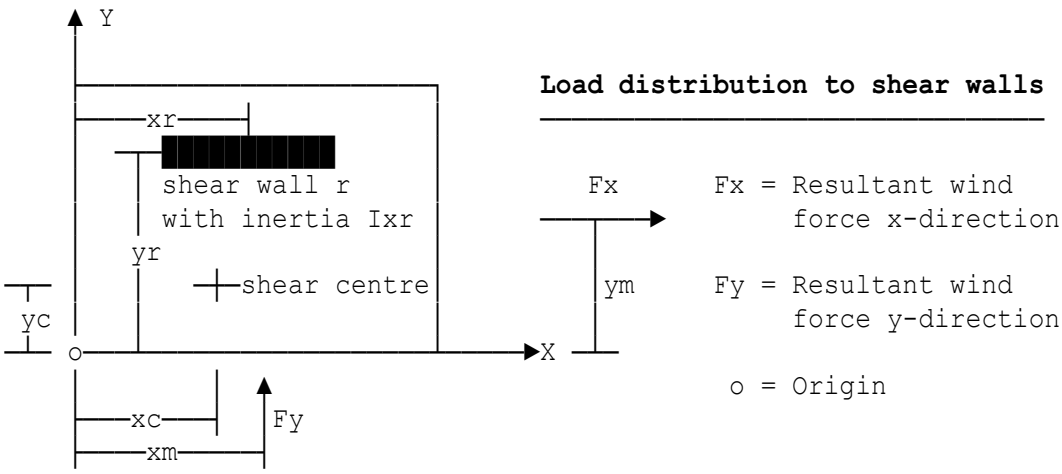

Number of walls resisting movement n=4

Wall 1

x-coord.of bottom left-hand corner of wall xs(1)=0 m
y-coord.of bottom left-hand corner of wall ys(1)=0 m
x-coord.of top right-hand corner of wall xe(1)=12 m
y-coord.of top right-hand corner of wall ye(1)=1 m

Wall 2

x-coord.of bottom left-hand corner of wall xs(2)=0 m
y-coord.of bottom left-hand corner of wall ys(2)=2 m
x-coord.of top right-hand corner of wall xe(2)=1 m
y-coord.of top right-hand corner of wall ye(2)=10 m

Wall 3

x-coord.of bottom left-hand corner of wall xs(3)=11 m
y-coord.of bottom left-hand corner of wall ys(3)=2 m
x-coord.of top right-hand corner of wall xe(3)=12 m
y-coord.of top right-hand corner of wall ye(3)=10 m

Wall 4

x-coord.of bottom left-hand corner of wall xs(4)=0 m
y-coord.of bottom left-hand corner of wall ys(4)=11 m
x-coord.of top right-hand corner of wall xe(4)=12 m
y-coord.of top right-hand corner of wall ye(4)=12 m

Resultant wind force in x-direct. (unfactored) Fx=50 kN
Distance of this force from the origin ym=3 m
Resultant wind force in y-direct. (unfactored) Fy=30 kN
Distance of this force from the origin xm=9 m

Resistance of walls in x-direction

Wall 1

Inertia of wall to resist force in x-direction Ix(i)=144 m^4
Dist.from origin to centroid of wall in y-dir. y(i)=0.5 m

Wall 2

Inertia of wall to resist force in x-direction Ix(i)=0.66667 m^4
Dist.from origin to centroid of wall in y-dir. y(i)=6 m

Wall 3

Inertia of wall to resist force in x-direction Ix(i)=0.66667 m^4
Dist.from origin to centroid of wall in y-dir. y(i)=6 m

Wall 4

Inertia of wall to resist force in x-direction Ix(i)=144 m^4
Dist.from origin to centroid of wall in y-dir. y(i)=11.5 m

Resistance of walls in y-direction

Wall 1

Inertia of wall to resist force in y-direction Iy(i)=1 m^4
Dist.from origin to centroid of wall in x-dir. x(i)=6 m

Wall 2

Inertia of wall to resist force in y-direction Iy(i)=42.667 m^4
Dist.from origin to centroid of wall in x-dir. x(i)=0.5 m

Wall 3

Inertia of wall to resist force in y-direction Iy(i)=42.667 m^4
Dist.from origin to centroid of wall in x-dir. x(i)=11.5 m

Wall 4

Inertia of wall to resist force in y-direction Iy(i)=1 m^4
Dist.from origin to centroid of wall in x-dir. x(i)=6 m

RESULTS

Eccentricity of force Fx from shear centre ey=ym-yc=-3 m
Eccentricity of force Fy from shear centre ex=xm-xc=3 m

Load resistance of individual walls in x-direction

```
Wall 1 :
  Load resistance
  Proportion of total force resisted by this wall px(1)=fx(i)/Fx*100
                                                      =58.185 %
Wall 2 :
  Load resistance
  Proportion of total force resisted by this wall px(2)=fx(i)/Fx*100
                                                      =0.23041 %
Wall 3 :
  Load resistance
  Proportion of total force resisted by this wall px(3)=fx(i)/Fx*100
                                                      =0.23041 %
Wall 4 :
  Load resistance
  Proportion of total force resisted by this wall px(4)=fx(i)/Fx*100
                                                      =41.354 %
  Since torsional component reduces calculated load resistance of this
  wall component, Orton suggests this term be ignored. If this is done,
  Load resistance                fx(4)=Fx*Ix(i)/sigIxr=24.885 kN
  Proportion of total force resisted by this wall px(4)=fx(i)/Fx*100
                                                      =49.77 %
```

Load resistance of individual walls in y-direction

```
Wall 1 :
  Load resistance
  Proportion of total force resisted by this wall py(1)=fy(i)/Fy*100
                                                      =1.145 %
Wall 2 :
  Load resistance
  Proportion of total force resisted by this wall py(2)=fy(i)/Fy*100
                                                      =53.011 %
Wall 3 :
  Load resistance
  Proportion of total force resisted by this wall py(3)=fy(i)/Fy*100
                                                      =44.699 %
  Since torsional component reduces calculated load resistance of this
  wall component, Orton suggests this term be ignored. If this is done,
  Load resistance                fy(3)=Fy*Iy(i)/sigIyr=14.656 kN
  Proportion of total force resisted by this wall py(3)=fy(i)/Fy*100
                                                      =48.855 %
Wall 4 :
  Load resistance
  Proportion of total force resisted by this wall py(4)=fy(i)/Fy*100
                                                      =1.145 %
```

Location: Masonry support angle on grid line A/1-2

Reference

Design of Masonry Support Angles, by J.R.Veale, Grove Consultants Ltd.
Steel Construction Today.1988, 2, pp 81-88. Program by P.L.Baxter.

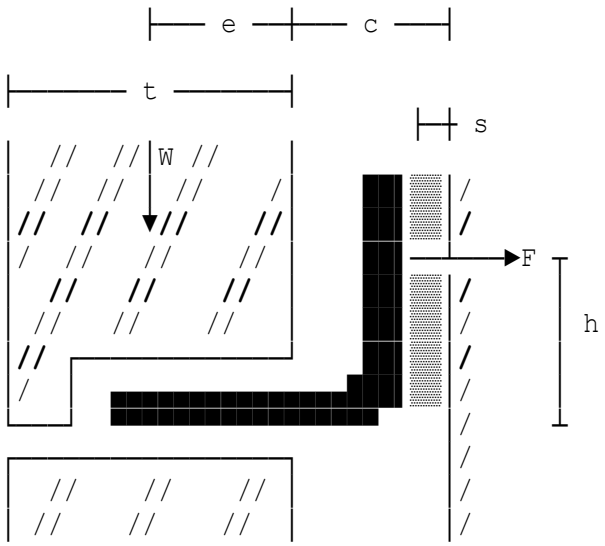

Typical support angle arrangement leg facing up

Thickness of masonry panel	t=102 mm
Nominal cavity width	c=50 mm
Nominal thickness of shims	s=15 mm
Fixing spacing	fs=500 mm
Panel self weight line of action	e=51 mm
Fixing lever arm	h=75 mm
Actual horizontal leg length	L=110 mm
Panel self weight	W=3.5 kN/m
Max allowable bending stress	fmax=140 N/mm²
Modulus of elasticity	E=195000 N/mm²
Poisson's ratio	v=0.3
Maximum allowable deflection	delta=1.5 mm
Actual vertical leg length	VL=120 mm
Actual vertical leg length	VL=120 mm

DESIGN SUMMARY	**Horizontal leg length**	**110 mm**
	Vertical leg length	**120 m**
	Thickness	**5 mm**
	Allowable bending stress	**140 N/mm²**
	Wp at support	**5.5373 kN/m**
	Wq at quarter span	**3.3529 kN/m**
	Wr at midspan	**1.7568 kN/m**
	Trans bend stress - support	**114.29 N/mm²**
	Trans bend stress - 1/4 span	**69.205 N/mm²**
	Trans bend stress at midspan	**36.26 N/mm²**
	Defln at angle toe (support)	**1.4646 mm**
	Defln at angle toe (midspan)	**1.4096 mm**

Location: Masonry support angle on grid line A/1-2

Reference

Design of Masonry Support Angles, by J.R.Veale, Grove Consultants Ltd.
Steel Construction Today.1988, 2, pp 81-88. Program by P.L.Baxter.

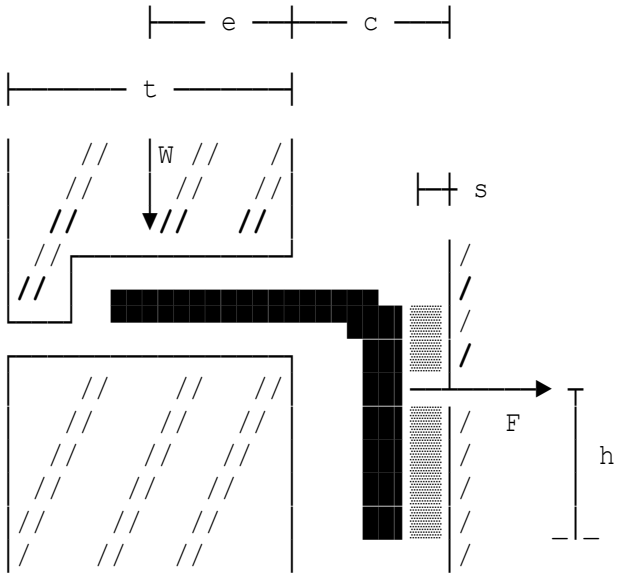

Typical support angle arrangement leg facing down

Thickness of masonry panel	t=102 mm
Nominal cavity width	c=50 mm
Nominal thickness of shims	s=15 mm
Fixing spacing	fs=500 mm
Panel self weight line of action	e=51 mm
Fixing lever arm	h=75 mm
Actual horizontal leg length	L=110 mm
Panel self weight	W=3.5 kN/m
Max allowable bending stress	fmax=140 N/mm²
Modulus of elasticity	E=195000 N/mm²
Poisson's ratio	v=0.3
Maximum allowable deflection	delta=1.5 mm
Actual vertical leg length	VL=110 mm
Actual vertical leg length	VL=110 mm

DESIGN SUMMARY		
	Horizontal leg length	**110 mm**
	Vertical leg length	**110 m**
	Thickness	**5 mm**
	Allowable bending stress	**140 N/mm²**
	Wp at support	**5.6575 kN/m**
	Wq at quarter span	**3.3214 kN/m**
	Wr at midspan	**1.6997 kN/m**
	Trans bend stress - support	**116.77 N/mm²**
	Trans bend stress - 1/4 span	**68.554 N/mm²**
	Trans bend stress at midspan	**35.081 N/mm²**
	Defln at angle toe (support)	**1.4964 mm**
	Defln at angle toe (midspan)	**1.4388 mm**

Location: Masonry support angle on grid line A/1-2

Reference

Design of Masonry Support Angles, by J.R.Veale, Grove Consultants Ltd.
Steel Construction Today.1988, 2, pp 81-88. Program by P.L.Baxter.

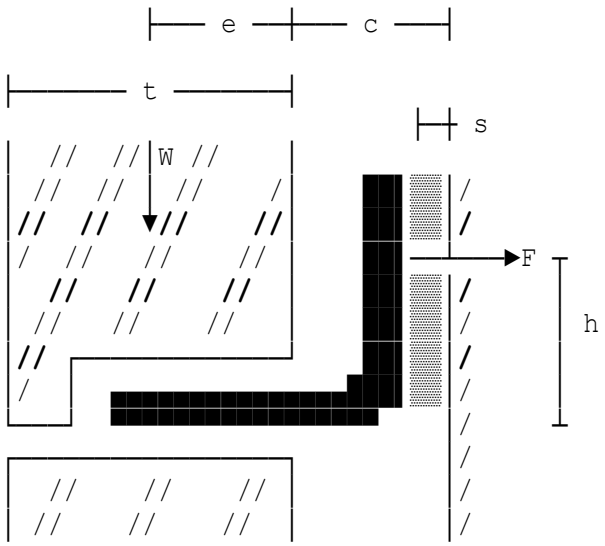

Typical support angle arrangement leg facing up

Thickness of masonry panel	t=300 mm
Nominal cavity width	c=50 mm
Nominal thickness of shims	s=25 mm
Fixing spacing	fs=500 mm
Panel self weight line of action	e=150 mm
Fixing lever arm	h=50 mm
Actual horizontal leg length	L=230 mm
Panel self weight	W=2 kN/m
Max allowable bending stress	fmax=350 N/mm²
Modulus of elasticity	E=195000 N/mm²
Poisson's ratio	v=0.3
Maximum allowable deflection	delta=25 mm
Actual vertical leg length	VL=90 mm

DESIGN SUMMARY	**Horizontal leg length**	**230 mm**
	Vertical leg length	**90 m**
	Thickness	**3 mm**
	Allowable bending stress	**350 N/mm²**
	Wp at support	**2.6666 kN/m**
	Wq at quarter span	**1.9203 kN/m**
	Wr at midspan	**1.4928 kN/m**
	Trans bend stress - support	**311.1 N/mm²**
	Trans bend stress - 1/4 span	**224.03 N/mm²**
	Trans bend stress at midspan	**174.16 N/mm²**
	Defln at angle toe (support)	**20.053 mm**
	Defln at angle toe (midspan)	**19.302 mm**

Location: Ex1 - Masonry support angle on grid line A/1-2

Reference

Design of Masonry Support Angles, by J.R.Veale, Grove Consultants Ltd published in the Steel Construction Today 1988, 2, pp 81-88.

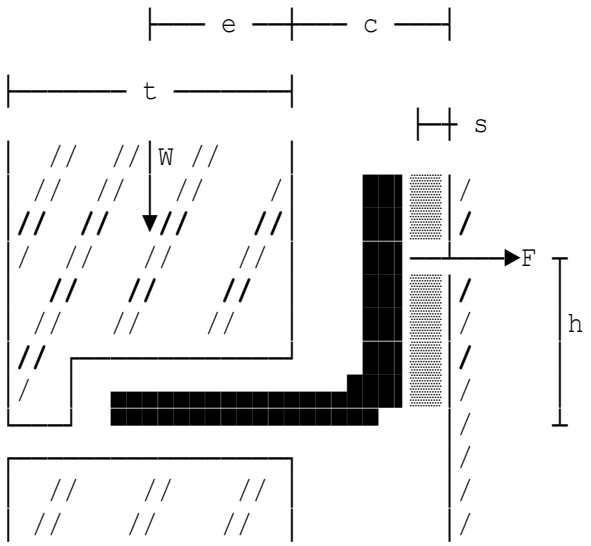

Typical support angle arrangement leg facing up

Thickness of masonry panel	t=102 mm
Nominal cavity width	c=50 mm
Nominal thickness of shims	s=15 mm
Fixing spacing	fs=500 mm
Panel self weight line of action	e=51 mm
Fixing lever arm	h=75 mm
Actual horizontal leg length	L=110 mm
Panel self weight (unfactored)	W=3.5 kN/m
Modulus of elasticity	E=210000 N/mm²
Poisson's ratio	v=0.3
Maximum allowable deflection	delta=1.5 mm
Actual vertical leg length	VL=120 mm
Actual vertical leg length	VL=120 mm

DESIGN	**Support angle horizontal leg length**	**110 mm**
SUMMARY	**Support angle vertical leg length**	**120 m**
	Thickness	**5 mm**
	Support angle grade	**S 275**
	Char allowable bending stress	**140 N/mm²**
	Support load/unit length	**5.5373 kN/m**
	Quarter span load/unit length	**3.3529 kN/m**
	Midspan load/unit length	**1.7568 kN/m**
	Transverse bending stress @ support	**114.29 N/mm²**
	Transverse bending stress @ 1/4 span	**69.205 N/mm²**
	Transverse bending stress @ midspan	**36.26 N/mm²**
	Deflection at angle toe (support)	**1.36 mm**
	Deflection at angle toe (midspan)	**1.3089 mm**

Location: Ex2 - Masonry support angle on grid line A/1-2

Reference

Design of Masonry Support Angles, by J.R.Veale, Grove Consultants Ltd published in the Steel Construction Today 1988, 2, pp 81-88.

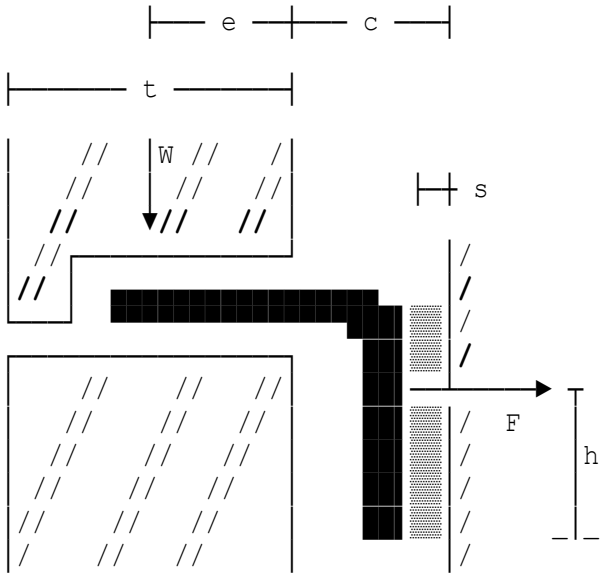

Typical support angle arrangement leg facing down

Thickness of masonry panel	t=102 mm
Nominal cavity width	c=50 mm
Nominal thickness of shims	s=15 mm
Fixing spacing	fs=500 mm
Panel self weight line of action	e=51 mm
Fixing lever arm	h=75 mm
Actual horizontal leg length	L=110 mm
Panel self weight (unfactored)	W=3.5 kN/m
Modulus of elasticity	E=210000 N/mm²
Poisson's ratio	v=0.3
Maximum allowable deflection	delta=1.5 mm
Actual vertical leg length	VL=110 mm
Actual vertical leg length	VL=110 mm

DESIGN SUMMARY	**Support angle horizontal leg length**	**110 mm**
	Support angle vertical leg length	**110 m**
	Thickness	**5 mm**
	Support angle grade	**S 275**
	Char allowable bending stress	**140 N/mm²**
	Support load/unit length	**5.6575 kN/m**
	Quarter span load/unit length	**3.3214 kN/m**
	Midspan load/unit length	**1.6997 kN/m**
	Transverse bending stress @ support	**116.77 N/mm²**
	Transverse bending stress @ 1/4 span	**68.554 N/mm²**
	Transverse bending stress @ midspan	**35.081 N/mm²**
	Deflection at angle toe (support)	**1.3895 mm**
	Deflection at angle toe (midspan)	**1.336 mm**

Location: Ex3 - Masonry support angle on grid line A/1-2

Reference

Design of Masonry Support Angles, by J.R.Veale, Grove Consultants Ltd published in the Steel Construction Today 1988, 2, pp 81-88.

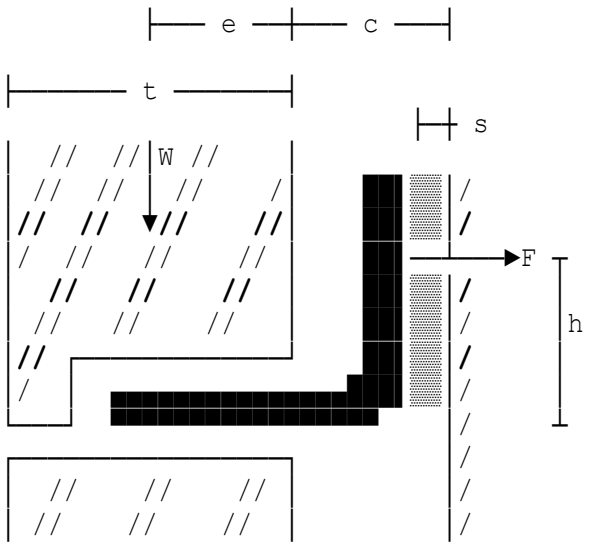

Typical support angle arrangement leg facing up

Thickness of masonry panel	t=300 mm
Nominal cavity width	c=50 mm
Nominal thickness of shims	s=25 mm
Fixing spacing	fs=500 mm
Panel self weight line of action	e=150 mm
Fixing lever arm	h=50 mm
Actual horizontal leg length	L=230 mm
Panel self weight (unfactored)	W=2 kN/m
Modulus of elasticity	E=210000 N/mm²
Poisson's ratio	v=0.3
Maximum allowable deflection	delta=25 mm
Actual vertical leg length	VL=90 mm
Actual vertical leg length	VL=90 mm

DESIGN SUMMARY	**Support angle horizontal leg length**	**230 mm**
	Support angle vertical leg length	**90 m**
	Thickness	**4 mm**
	Support angle grade	**S 355**
	Char allowable bending stress	**250 N/mm²**
	Support load/unit length	**2.6694 kN/m**
	Quarter span load/unit length	**1.9197 kN/m**
	Midspan load/unit length	**1.4913 kN/m**
	Transverse bending stress @ support	**175.18 N/mm²**
	Transverse bending stress @ 1/4 span	**125.98 N/mm²**
	Transverse bending stress @ midspan	**97.864 N/mm²**
	Deflection at angle toe (support)	**7.8639 mm**
	Deflection at angle toe (midspan)	**7.5686 mm**

Location: Ex1 - Centre arch

Pippard/MEXE analysis for masonry arch bridges (CS 454 Section 7)

Analysis for dead load and applied unit live load

Frame analysis:

Number of joints 13
Number of members 12

Radial thickness 0.343 m
Young's modulus 14E6 kN/m²
Shear modulus 5.83E6 kN/m²

Joint Coordinates:

Joint No.	X Coordinate (m)	Y Coordinate (m)
1	0	0
2	0.58	0.54
3	1.08	0.83
4	1.36	0.96
5	1.58	1.03
6	2.08	1.14
7	2.58	1.18
8	3.08	1.14
9	3.58	1.03
10	3.8	0.96
11	4.08	0.83
12	4.58	0.54
13	5.16	0

Coordinates of road surface:

Position 1 x=0 m y=1.68 m
Position 2 x=4.9 m y=1.68 m

Axle Load Cases

No. of axle cases analysed 3

Axle Load Case	Axle Location From Left Springing	Transverse Load Distribution	
		Effective Width	No. of Axles
1 *	0.5	6.2	2
2	1.7	6.25	2
3	2	5.8	2

* Part axle load disperses behind left springing.

Material densities:

Arch ring 21 kN/m³
Top 100mm surfacing 24 kN/m³
Fill material 19 kN/m³

Partial load factors (CS 454 Table 3.4 or Appendix A):

	ULS	SLS
Arch ring	1.15	1
Top 100mm surfacing	1.75	1.2
Fill material	1.2	1

Characteristic masonry strength fk=5000 kN/m²

Width factor (Table 7.5.1b) Fw=0.9
Mortar factor (Table 7.5.1d) Fmo=0.9
Depth factor (Table 7.5.1c) Fd=0.9

Joint factor (Clause 7.5.1) Fj=Fw*Fd*Fmo=0.729
Condition factor (Table 7.5.1a) FcM=0.7

Allowable single axle loads

Axle Load Case	Allowable Axle Load (tonnes)	Member	Member End	Dead Load Case
1	26.762	1	2	Ultimate
2	13.883	4	2	Ultimate
3	14.008	6	1	Ultimate

Axle load case 2

Minimum allowable single axle load 13.883 tonnes
Stresses at End 2 of Member 4
Axle load combined with ultimate dead load.

Span of arch L=4.9 m
Centrifugal effect factor Fa=1.0

DESIGN SUMMARY

Allowable axle loads are rounded off to the nearest 0.5 tonnes
Rounded values of allowable axle loads - no lift-off case
Single axle 14 tonnes
Double axle 12.5 tonnes
Triple axle 12.5 tonnes

Weight Restrictions & Permitted Vehicles (Appendix E Table E.3).

Type of Vehicle	Allowable Axle Load (tonnes) per axle			Max Gross Vehicle Weight (tonnes)	Weight Restriction (tonnes)	Vehicle Permitted
	Single	Double	Triple			
HGV axles						
5 or 6	11.5	10.0	8.0	40/44	N/A	Yes
4	11.5	9.5		32	33	Yes
3	11.5	9.5		26	26	Yes
2	11.5			18	18	Yes
2	9.0			12.5	13	Yes
2	7.0			10	10	Yes
LGV	5.5			7.5	7.5	Yes
Car/Van	2.0			3	3	Yes
Fire Eng.						
Group 1	10.0					Yes
Group 2	5.0					Yes

Location: Ex1 - Centre arch

Pippard/MEXE analysis for masonry arch bridges (CS 454)

C & U, AW or User Defined Single Axles and Bogies

Frame analysis:

Number of joints	13
Number of members	12
Radial thickness	0.343 m
Young's modulus	14E6 kN/m²
Shear modulus	5.83E6 kN/m²

Joint Coordinates:

Joint No.	X Coordinate (m)	Y Coordinate (m)
1	0	0
2	0.58	0.54
3	1.08	0.83
4	1.36	0.96
5	1.58	1.03
6	2.08	1.14
7	2.58	1.18
8	3.08	1.14
9	3.58	1.03
10	3.8	0.96
11	4.08	0.83
12	4.58	0.54
13	5.16	0

Coordinates of road surface:

Position 1	x=0 m	y=1.68 m
Position 2	x=4.9 m	y=1.68 m

Live Load Cases:

No. of live load cases analysed 3

Nominal loads:

Live Load Case	Bogie Ref.	No. of axles	O/A Minimum Axle Spread (m)	Gross Bogie Weight (tonnes)	Crit. Axle	Axle 1 Location xl (m)
1	1	1	0	10.5	1	1.4
2	3	2	1.85	20.34	2	3.25
3	5	3	2.7	22.5	1	1.4

where, xl is the distance to Axle 1 from left springing (Joint 1)

ULS Load factors:

Partial load factors 3.4 & 1.9 have been adopted below for the frame analysis for the critical axle and the remaining axles respectively. These are considered to be appropriate for masonry arch bridges, for further information refer to CS 454 Section 10 Informative References BD 21 [Ref 27.I Clause 6.20].

Live Load Case	Standard CS 454 Table 7.3.1b Conversion Factors			Partial load factors for the critical and other axles			Axle Factors		
	Axle 1	Axle 2	Axle 3	Axle 1	Axle 2	Axle 3	Axle 1	Axle 2	Axle 3
1	1			3.4			3.4		
2 *	0.5	1.5		1.9	3.4		0.95	5.1	
3 *	1.5	1	0.5	3.4	1.9	1.9	5.1	1.9	0.95

* Axle lift off case

Transverse load distribution:

Live Load Case	Axle 1		Axle 2		Axle 3	
	Effective Width	No. of Axles	Effective Width	No. of Axles	Effective Width	No. of Axles
1	6.3	2				
2	6.2	2	6.3	2		
3	6.3	2	7.1	2	7.2	2

Material densities:

Arch ring 21 kN/m³
Top 100mm surfacing 24 kN/m³
Fill material 19 kN/m³

Partial load factors (CS 454 Table 3.4 or Appendix A):

	ULS	SLS
Arch ring	1.15	1
Top 100mm surfacing	1.75	1.2
Fill material	1.2	1

Characteristic masonry strength fk=5000 kN/m²

Factors from MEXE method (Standard CS 454).
Width factor (Table 7.5.1b) Fw=0.9
Mortar factor (Table 7.5.1d) Fmo=0.9
Depth factor (Table 7.5.1c) Fd=0.9
Joint factor (Clause 7.5.1) Fj=Fw*Fd*Fmo=0.729
Condition factor (Table 7.5.1a) FcM=0.7
Centrifugal effect factor Fa=1.0

DESIGN SUMMARY

Single axles:

Live Load Case	Bogie Description	Axle Spread (m)	Gross Axle Weight (tonnes)	Capacity Factor	Allowable Axle Load (tonnes)
1	C&U Single axle	-	10.5	1.3382	14.051

Double axles:

Live Load Case	Bogie Description	Axle Spread (m)	Gross Axle Weight (tonnes)	Capacity Factor	Allowable Axle Load (tonnes)
2	C&U Double axle	1.85	10.17	1.0207	10.381

Triple axles:

Live Load Case	Bogie Description	Axle Spread (m)	Gross Axle Weight (tonnes)	Capacity Factor	Allowable Axle Load (tonnes)
3	C&U Triple axle	2.7	7.5	1.1864	8.8983

Location: Ex1 - Centre arch

Pippard/MEXE analysis for masonry arch bridges (CS 454 Section 7)

User defined vehicles

Frame analysis:

Number of joints 13
Number of members 12

Radial thickness 0.45 m
Young's modulus 14E6 kN/m²
Shear modulus 5.83E6 kN/m²

Joint Coordinates:

Joint No.	X Coordinate (m)	Y Coordinate (m)
1	0	0
2	1.143	0.752
3	2.286	1.405
4	4.001	2.196
5	5.715	2.76
6	7.43	3.099
7	9.144	3.212
8	10.858	3.099
9	12.573	2.76
10	14.287	2.196
11	16.002	1.405
12	17.145	0.752
13	18.288	0

Coordinates of road surface:

Position 1 x=0 m y=3.55 m
Position 2 x=18 m y=3.55 m

Live Load Cases

Number of live load cases analysed 1

Live Load Case 1

Number of line loads 1

Line Load (kN)	Nominal Load (kN)	Load Factor	Factored Load (kN)	Contact Length (m)	Location From Left Springing	Load Disp.
1	40	1.5	60	0	6	No

Live Load Case 1

Number of UDL 1

UDL	Nominal Load (kN/m)	Load Factor	Factored Load (kN/m)	Contact Length (m)	Location From Left Springing	Load Disp.
1	30	1.5	45	9.144	9.144	No

Material densities:

Arch ring 21 kN/m³
Top 100mm surfacing 24 kN/m³
Fill material 19 kN/m³

Partial load factors (CS 454 Table 3.4 or Appendix A):

	ULS	SLS
Arch ring	1.15	1
Top 100mm surfacing	1.75	1.2
Fill material	1.2	1

Characteristic masonry strength fk=10000 kN/m²

Width factor (Table 7.5.1b) Fw=1
Mortar factor (Table 7.5.1d) Fmo=1
Pointed joints in good condition.
Depth factor (Table 7.5.1c) Fd=1.0
Joint factor (Clause 7.5.1) Fj=Fw*Fd*Fmo=1
Condition factor (Clause 3.17) FcM=0.9
Centrifugal effect factor Fa=1.0

DESIGN SUMMARY

Live load case 1 Final capacity factor 0.77021

Live load case 1 Minimum final capacity factor 0.77021

Location: Ex1 - 8 metre span arch

Assessment of Masonry Arch Bridges by the Modified MEXE Method

Departmental Standard CS 454

Calculations are in accordance with Departmental Standard CS 454 entitled "Assessment of Highway Bridges and Structures". Unless noted otherwise, references are to Departmental Standard CS 454. For restrictions to the use of the MEXE method refer to Section 7 (Clause 7.13).

Unless noted otherwise references are to Appendix E.

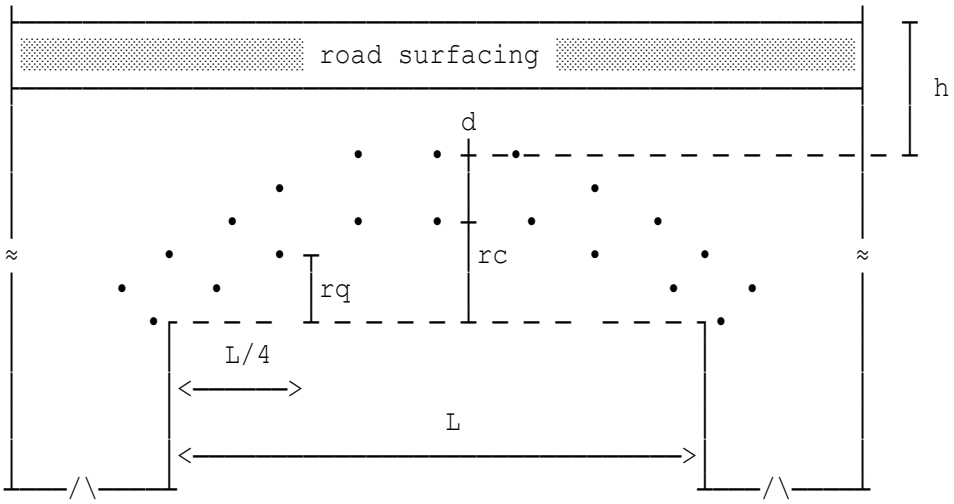

Span of arch	L=8 m
Rise of the arch barrel at crown	rc=2.95 m
Rise of the arch barrel at quarter points	rq=2.14 m
Thickness of barrel adjacent to keystone	d=0.305 m
Average depth of fill, at the quarter points of the transverse road profile, between the road surface and the arch barrel at the crown, including road surfacing (Clause E3)	h=0.3 m
Total crown thickness	tct=h+d=0.605 m
Span rise factor	Fsr=1
Profile factor	Fp=1.0
Barrel factor (Table E.1)	Fb=1.3
Width factor (Table 7.5.1b)	Fw=0.8
Mortar factor (Table 7.5.1d)	Fmo=0.9
Depth of missing mortar	doms=0.01 m
Depth factor (Table 7.5.1c)	Fd=1.0
Joint factor (Clause 7.5.1)	Fj=Fw*Fd*Fmo=0.72
Fill factor (Table E.2)	Ff=0.7
Material factor	Fm=(Fb*dr+Ff*h)/(dr+h)=0.99748
Condition factor (Table 7.5.1a)	FcM=0.9
Provisional axle load (Cl. E4)	PAL=740*(dr+h)^2/L^1.3=17.549 tonnes
Modified axle load	MAL=Fsr*Fp*Fm*Fj*FcM*PAL=11.343 tonnes
Centrifugal effect factor	Fa=1.0

DESIGN SUMMARY

Allowable axle loads are rounded off to the nearest 0.5 tonnes
Rounded values of allowable axle loads - no lift-off case
Single axle 17 tonnes
Double axle 11.5 tonnes
Triple axle 10.5 tonnes
Weight Restrictions & Permitted Vehicles (Appendix E Table E.3).

Type of Vehicle	Allowable Axle Load (tonnes) per axle			Max Gross Vehicle Weight (tonnes)	Weight Restriction (tonnes)	Vehicle Permitted
	Single	Double	Triple			
HGV axles						
5 or 6	11.5	10.0	8.0	40/44	N/A	Yes
4	11.5	9.5		32	33	Yes
3	11.5	9.5		26	26	Yes
2	11.5			18	18	Yes
2	9.0			12.5	13	Yes
2	7.0			10	10	Yes
LGV	5.5			7.5	7.5	Yes
Car/Van	2.0			3	3	Yes
Fire Eng.						
Group 1	10.0					Yes
Group 2	5.0					Yes

Location: Ex1 - Hand analysis example by Professor MR Horne

Arch geometry and loading

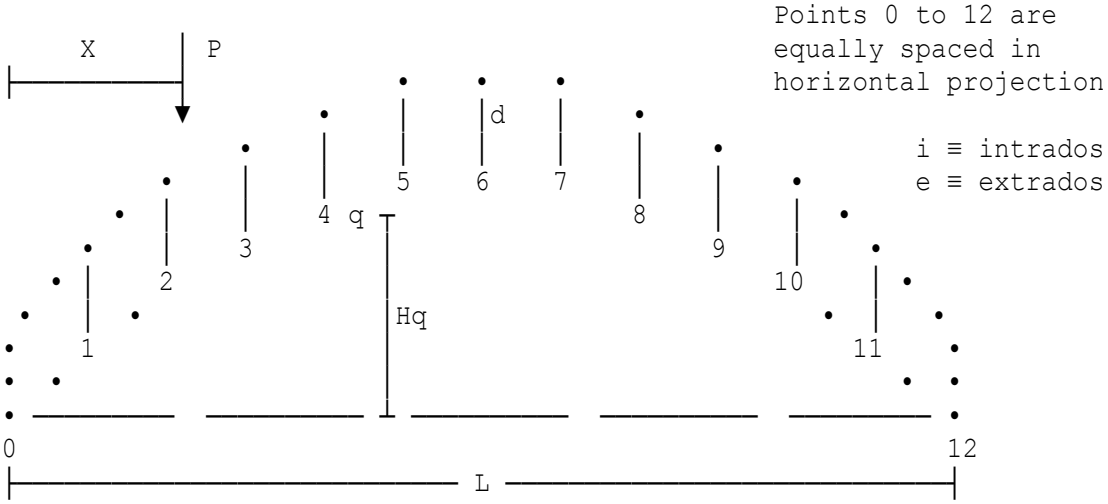

Span of arch	L=24 m
First intrados trial hinge point	I1=4
First extrados trial hinge point	E1=0
Second intrados trial hinge point	I2=12
Second extrados trial hinge point	E2=9

Dead load at point 1	w(1)=10 kN
Dead load at point 2	w(2)=10 kN
Dead load at point 3	w(3)=10 kN
Dead load at point 4	w(4)=10 kN
Dead load at point 5	w(5)=10 kN
Dead load at point 6	w(6)=10 kN
Dead load at point 7	w(7)=10 kN
Dead load at point 8	w(8)=10 kN
Dead load at point 9	w(9)=10 kN
Dead load at point 10	w(10)=10 kN
Dead load at point 11	w(11)=10 kN

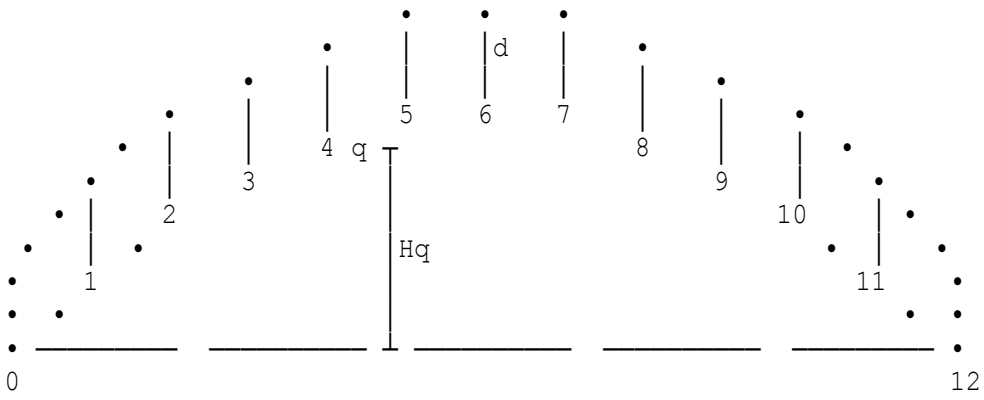

Height of intrados at point 0 H0=0 m
Height of intrados at point 1 H(1)=1.7106 m
Height of intrados at point 2 H(2)=2.966 m
Height of intrados at point 3 H(3)=3.8739 m
Height of intrados at point 4 H(4)=4.4918 m
Height of intrados at point 5 H(5)=4.8517 m
Height of intrados at point 6 H(6)=4.97 m
Height of intrados at point 7 H(7)=4.8517 m
Height of intrados at point 8 H(8)=4.4918 m
Height of intrados at point 9 H(9)=3.8739 m
Height of intrados at point 10 H(10)=2.966 m
Height of intrados at point 11 H(11)=1.7106 m
Height of intrados at point 12 H(12)=0 m

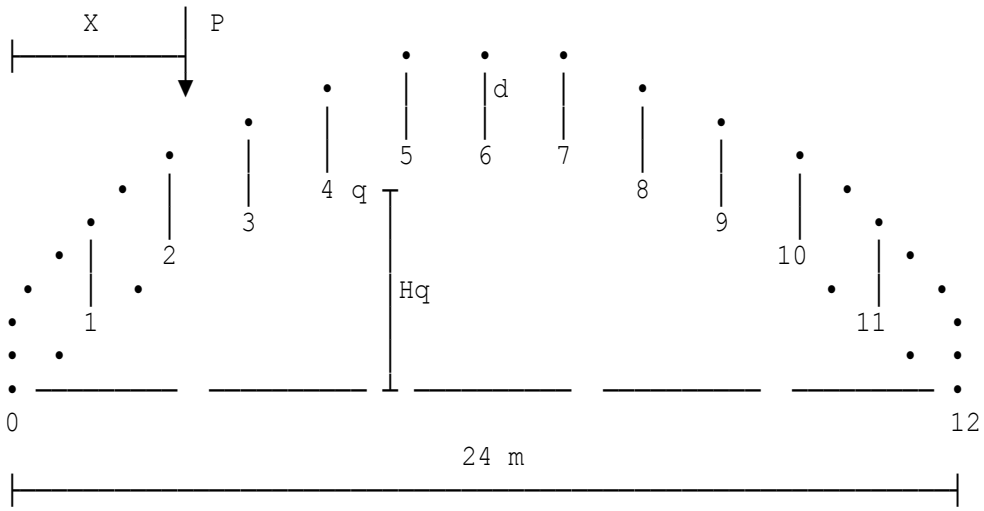

Test load P=100 kN
Location of test load X=18 m

SUMMARY

Line of thrust lies above the intrados and below the extrados.

Moment at left end of arch	**238.54 kNm**
Horizontal reaction at left end	**55 kN**
Moment at right end of arch	**-0.23854E-3 kNm**
Horizontal reaction at right end	**55 kN**
Thickness of arch	**1.1992 m**

Location: Ex1 - Hand analysis example by Professor MR Horne

Arch geometry and loading

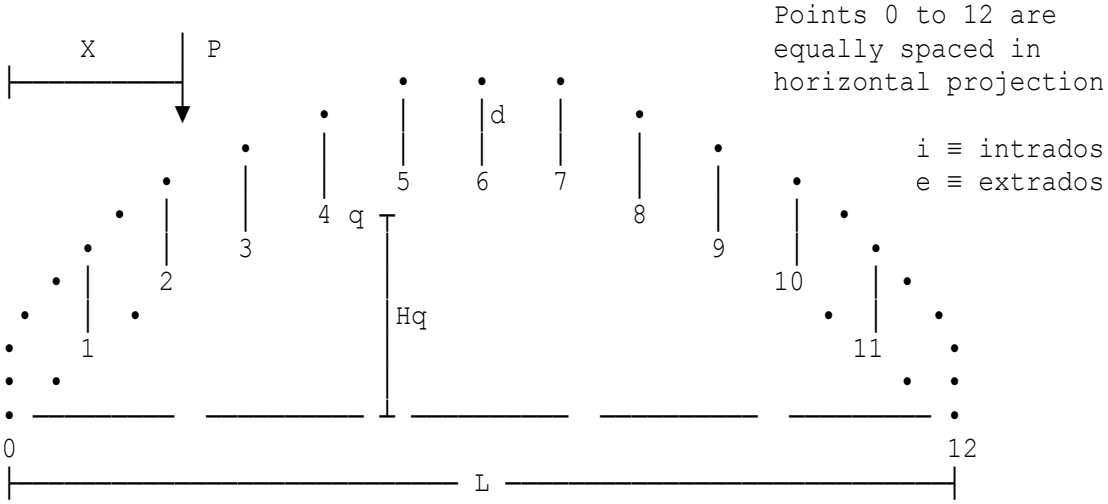

Span of arch	L=24 m
First intrados trial hinge point	I1=4
First extrados trial hinge point	E1=0
Second intrados trial hinge point	I2=12
Second extrados trial hinge point	E2=9

Dead load at point 1	w(1)=10 kN
Dead load at point 2	w(2)=10 kN
Dead load at point 3	w(3)=10 kN
Dead load at point 4	w(4)=10 kN
Dead load at point 5	w(5)=10 kN
Dead load at point 6	w(6)=10 kN
Dead load at point 7	w(7)=10 kN
Dead load at point 8	w(8)=10 kN
Dead load at point 9	w(9)=10 kN
Dead load at point 10	w(10)=10 kN
Dead load at point 11	w(11)=10 kN

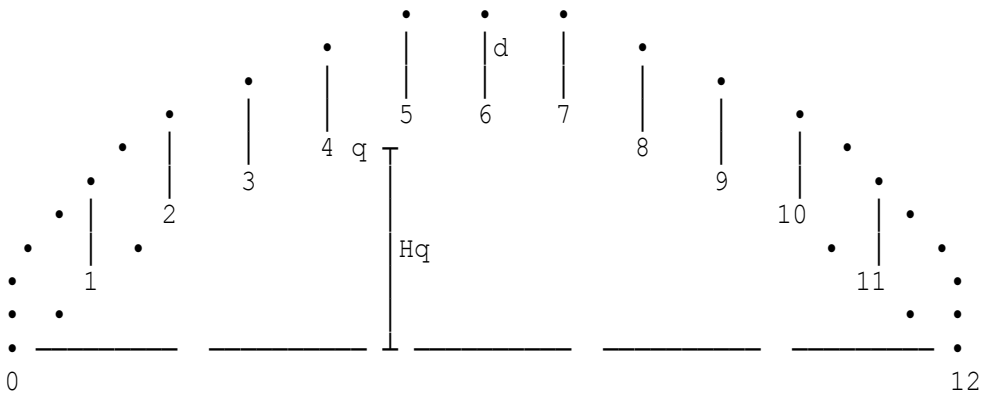

Height of intrados at point 0 H0=0 m
Height of intrados at point 1 H(1)=1.7106 m
Height of intrados at point 2 H(2)=2.966 m
Height of intrados at point 3 H(3)=3.8739 m
Height of intrados at point 4 H(4)=4.4918 m
Height of intrados at point 5 H(5)=4.8517 m
Height of intrados at point 6 H(6)=4.97 m
Height of intrados at point 7 H(7)=4.8517 m
Height of intrados at point 8 H(8)=4.4918 m
Height of intrados at point 9 H(9)=3.8739 m
Height of intrados at point 10 H(10)=2.966 m
Height of intrados at point 11 H(11)=1.7106 m
Height of intrados at point 12 H(12)=0 m

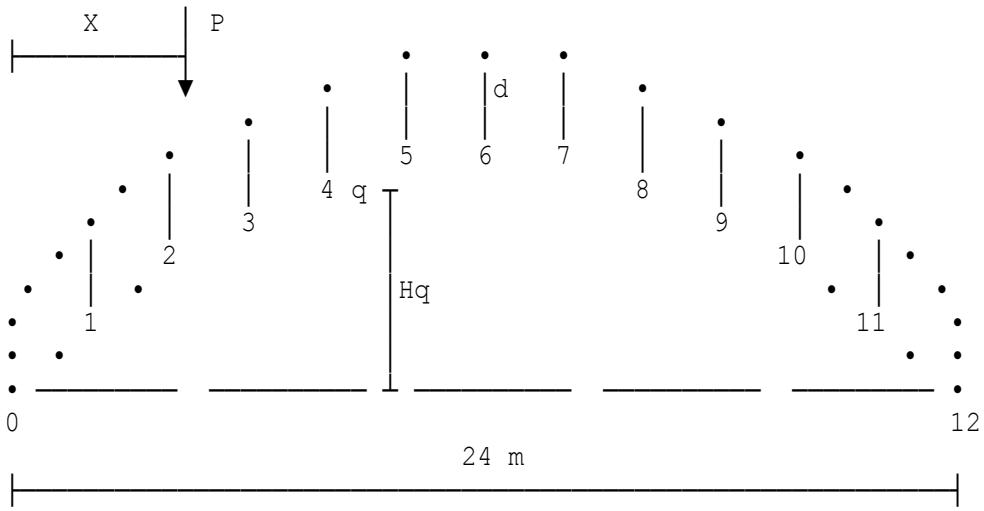

Test load P=100 kN
Location of test load X=18 m

SUMMARY

Line of thrust lies above the intrados and below the extrados.

Moment at left end of arch	**238.54 kNm**
Horizontal reaction at left end	**55 kN**
Moment at right end of arch	**-0.23854E-3 kNm**
Horizontal reaction at right end	**55 kN**
Thickness of arch	**1.1992 m**

NOTE: All values above are characteristic values.

Location: Ex1 - Masonry dam D1

The following analysis, checks the profile of a dam to ensure that the line of thrust comes within the middle third. Stresses at the back and front of the dam are also computed.

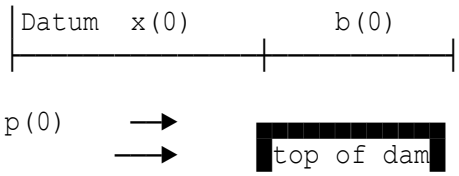

Datum is usually bottom left hand corner of dam cross-section, but need not be. Segments are numbered downwards from top of dam.

Number of segments in dam	NS=2
Density of masonry	gamma=24 kN/m³
Length of dam into paper	L=1 m
Horiz.distance from datum at top	x(0)=0.25 m
Width of dam at top	b(0)=2 m
Normal pressure at top of dam	p(0)=0 kN/m²

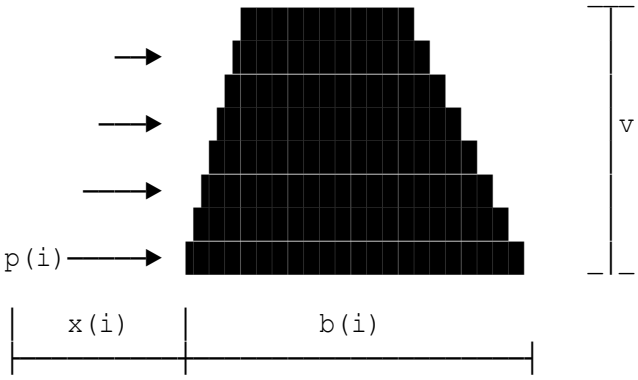

(i) is segment number,
i=1 for top segment
i=2 for bottom segment

Height of segment 1	v(1)=3 m
Horiz.distance from datum at bott	x(1)=0.25 m
Width of dam at segment bottom	b(1)=2 m
Normal pressure at segment bottom	p(1)=30 kN/m²
Height of segment 2	v(2)=5 m
Horiz.distance from datum at bott	x(2)=0 m
Width of dam at segment bottom	b(2)=5 m
Normal pressure at segment bottom	p(2)=80 kN/m²

SUMMARY

Segment	Bending moment (kNm)	Left Hand Side Vertical Stress (kN/m²)	Right Hand Side Vertical Stress (kN/m²)
1	45	4.5	139.5
2	415.42	15.85	215.25

Location: Ex2 - Masonry dam D2

The following analysis, checks the profile of a dam to ensure that the line of thrust comes within the middle third. Stresses at the back and front of the dam are also computed.

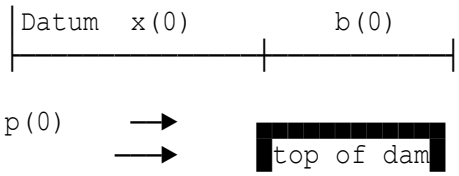

Datum is usually bottom left hand corner of dam cross-section, but need not be. Segments are numbered downwards from top of dam.

Number of segments in dam	NS=2
Density of masonry	gamma=20 kN/m³
Length of dam into paper	L=1 m
Horiz.distance from datum at top	x(0)=0.5 m
Width of dam at top	b(0)=4 m
Normal pressure at top of dam	p(0)=10 kN/m²

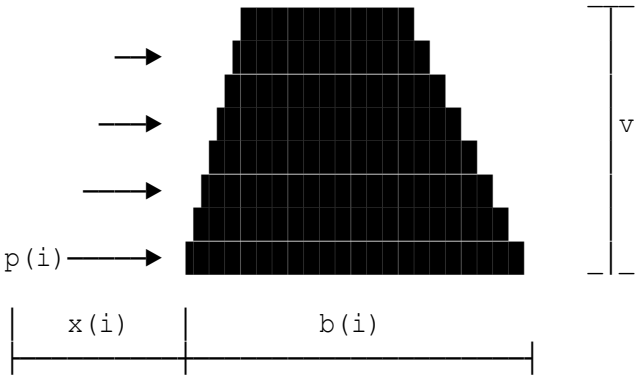

(i) is segment number,
i=1 for top segment
i=2 for bottom segment

Height of segment 1	v(1)=6 m
Horiz.distance from datum at bott	x(1)=0.5 m
Width of dam at segment bottom	b(1)=4 m
Normal pressure at segment bottom	p(1)=60 kN/m²
Height of segment 2	v(2)=10 m
Horiz.distance from datum at bott	x(2)=0 m
Width of dam at segment bottom	b(2)=10 m
Normal pressure at segment bottom	p(2)=160 kN/m²

SUMMARY

Segment	Bending moment (kNm)	Left Hand Side Vertical Stress (kN/m²)	Right Hand Side Vertical Stress (kN/m²)
1	480	-60	300
2	4283.3	-63.5	450.5

Location: Ex1 - Masonry dam D1

The following analysis, checks the profile of a dam to ensure that the line of thrust comes within the middle third. Stresses at the back and front of the dam are also computed.

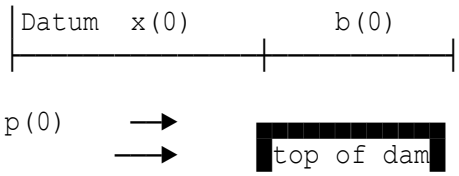

Datum is usually bottom left hand corner of dam cross-section, but need not be. Segments are numbered downwards from top of dam.

Number of segments in dam	NS=2
Density of masonry	gamma=24 kN/m³
Length of dam into paper	L=1 m
Horiz.distance from datum at top	x(0)=0.25 m
Width of dam at top	b(0)=2 m
Normal pressure at top of dam	p(0)=0 kN/m²

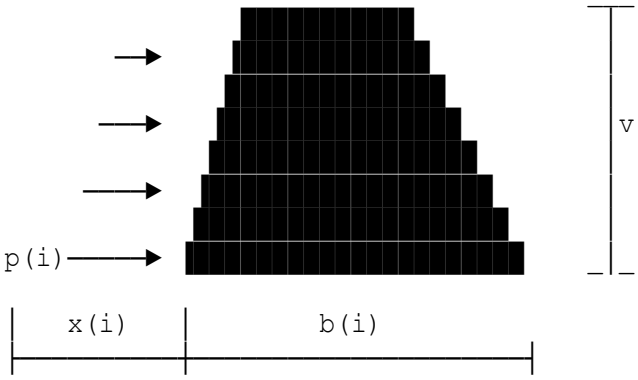

(i) is segment number,
i=1 for top segment
i=2 for bottom segment

Height of segment 1	v(1)=3 m
Horiz.distance from datum at bott	x(1)=0.25 m
Width of dam at segment bottom	b(1)=2 m
Normal pressure at segment bottom	p(1)=30 kN/m²
Height of segment 2	v(2)=5 m
Horiz.distance from datum at bott	x(2)=0 m
Width of dam at segment bottom	b(2)=5 m
Normal pressure at segment bottom	p(2)=80 kN/m²

SUMMARY

Segment	Bending moment (kNm)	Left Hand Side Vertical Stress (kN/m²)	Right Hand Side Vertical Stress (kN/m²)
1	45	4.5	139.5
2	415.42	15.85	215.25

NOTE: All values above are characteristic values.

Copyright 1986-2024 Fitzroy Systems Ltd.

Location: Ex2 - Masonry dam D2

The following analysis, checks the profile of a dam to ensure that the line of thrust comes within the middle third. Stresses at the back and front of the dam are also computed.

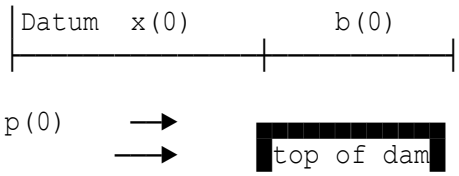

Datum is usually bottom left hand corner of dam cross-section, but need not be. Segments are numbered downwards from top of dam.

Number of segments in dam	NS=2
Density of masonry	gamma=20 kN/m³
Length of dam into paper	L=1 m
Horiz.distance from datum at top	x(0)=0.5 m
Width of dam at top	b(0)=4 m
Normal pressure at top of dam	p(0)=10 kN/m²

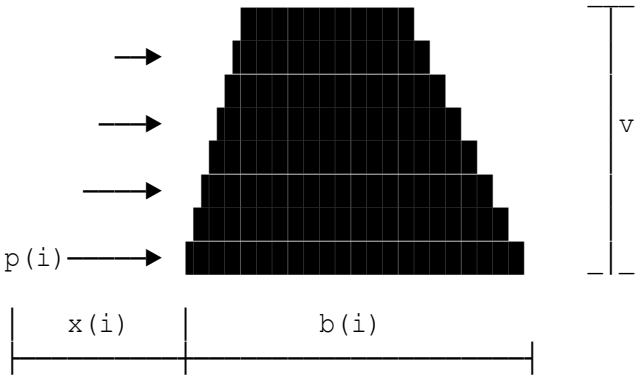

(i) is segment number,
i=1 for top segment
i=2 for bottom segment

Height of segment 1	v(1)=6 m
Horiz.distance from datum at bott	x(1)=0.5 m
Width of dam at segment bottom	b(1)=4 m
Normal pressure at segment bottom	p(1)=60 kN/m²
Height of segment 2	v(2)=10 m
Horiz.distance from datum at bott	x(2)=0 m
Width of dam at segment bottom	b(2)=10 m
Normal pressure at segment bottom	p(2)=160 kN/m²

SUMMARY

Segment	Bending moment (kNm)	Left Hand Side Vertical Stress (kN/m²)	Right Hand Side Vertical Stress (kN/m²)
1	480	-60	300
2	4283.3	-63.5	450.5

NOTE: All values above are characteristic values.

Location: Wall on grid line A/1-2

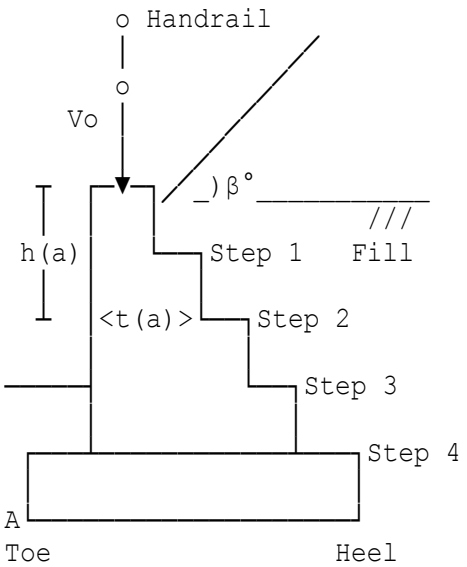

Steps are numbered down from the top

h(a) = height at step (a) from the top
t(a) = thickness at step (a)
Vo = vertical point load on wall

As a masonry wall has limited capacity the design will assume the backfill is drained i.e. no water pressure behind the wall.

Weight/unit volume of soil & wall	we=18 kN/m³
Internal angle of friction (fill)	phi=35°
Angle of backfill	beta=0°
Mortar designation to Table 1	mortar=3
	typ(1)=4
Height	hb=215 mm
Least horizontal dimension	lhd=100 mm
Compressive strength of blocks	po=10.5 N/mm²
Partial safety factor material	gammam=3.5
Applied moment at top of wall	xm=0.32 kNm
Applied vertical load on the wall	Vo=2 kN
Applied shear at top of wall	xv=0.36 kN
Weight/unit area of surcharge	ws=5 kN/m²
Load factor external loads at top	gamx=1.6
Load factor surcharge	gams=1.6
Load factor earth pressure	game=1.4
Load factor self weight	gamf=0.9
Proposed height at step	h(1)=0.45 m
Proposed thickness at step	t(1)=0.325 m
Width of toe	tt=0.15 m
Width of heel	th=0.15 m
Point of application of Vo from A	eVo=0.3125 m
Depth of base	db=0.15 m
Density of base	denb=24 kN/m³
Angle of friction (u/s of base)	phib=40°
Soil cohesion	cu=0 kN/m²

DESIGN SUMMARY

Wall height 1.8 m

Step height (m)	Step thickness (m)	Ultimate Moments below are in kNm Resistance BM	Applied BM
0.45	0.325	1.562	1.094
0.9	0.45	3.19	2.738
1.35	0.675	7.629	6.065
1.8	0.9	14.46	11.7

Stability check summary:

Factor of safety overturning	3.088
Factor of safety sliding	1.783
Maximum base pressure	68.22 kN/m²

Location: Wall on grid line B/1-2

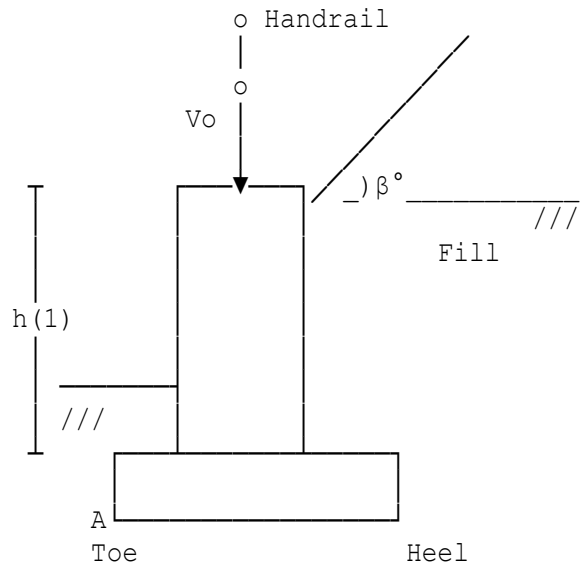

Constant wall thickness

h(1) = height of wall
t(1) = thickness of wall
Vo = vert point load on wall

As a masonry wall has limited capacity the design assumes the backfill is drained i.e. no water pressure behind the wall.

Weight/unit volume of soil & wall	we=18 kN/m³
Internal angle of friction (fill)	phi=35°
Angle of backfill	beta=0°
Mortar designation to Table 1	mortar=3
	typ(1)=2
Compressive strength of units	po=10.5 N/mm²
Partial safety factor material	gammam=3.5
Applied moment at top of wall	xm=0.25 kNm
Applied vertical load on the wall	Vo=0 kN
Applied shear at top of wall	xv=0.25 kN
Weight/unit area of surcharge	ws=5 kN/m²
Load factor external loads at top	gamx=1.6
Load factor surcharge	gams=1.6
Load factor earth pressure	game=1.4
Load factor self weight	gamf=0.9
Proposed height of wall	h(1)=1.25 m
Proposed thickness of wall	t(1)=0.625 m
Width of toe	tt=0.15 m
Width of heel	th=0.15 m
Point of application of Vo from A	eVo=0.4625 m
Depth of base	db=0.15 m
Density of base	denb=24 kN/m³
Angle of friction (u/s of base)	phib=40°
Soil cohesion	cu=0 kN/m²

WARNING:
Factor of safety for sliding is less than 1.5 and therefore changes are required.

Location: Wall on grid line C/1-2

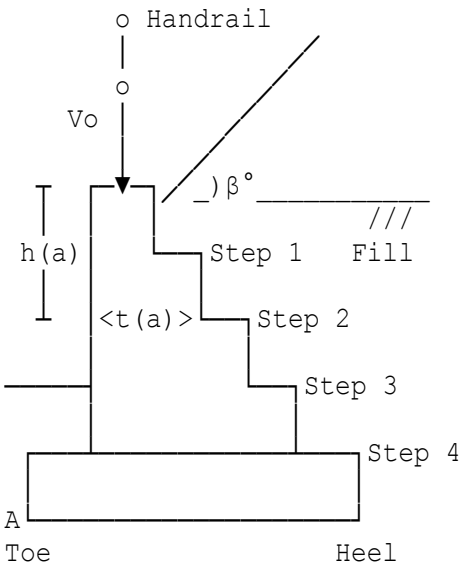

Steps are numbered down from the top

h(a) = height at step (a) from the top
t(a) = thickness at step (a)
Vo = vertical point load on wall

As a masonry wall has limited capacity the design will assume the backfill is drained i.e. no water pressure behind the wall.

Weight/unit volume of soil & wall	we=18 kN/m³
Internal angle of friction (fill)	phi=35°
Angle of backfill	beta=30°
Mortar designation to Table 1	mortar=3
	typ(1)=1
Compressive strength of units	po=10.5 N/mm²
Water absorption %age of leaf	water=7
Partial safety factor material	gammam=3.5
Applied moment at top of wall	xm=0.32 kNm
Applied vertical load on the wall	Vo=0 kN
Applied shear at top of wall	xv=0.36 kN
Weight/unit area of surcharge	ws=5 kN/m²
Load factor external loads at top	gamx=1.6
Load factor surcharge	gams=1.6
Load factor earth pressure	game=1.4
Load factor self weight	gamf=0.9
Proposed height at step	h(1)=0.45 m
Proposed thickness at step	t(1)=0.325 m
Width of toe	tt=0.15 m
Width of heel	th=0.15 m
Point of application of Vo from A	eVo=0.3125 m
Depth of base	db=0.15 m
Density of base	denb=24 kN/m³
Angle of friction (u/s of base)	phib=40°
Soil cohesion	cu=0 kN/m²

WARNING:
Factor of safety for sliding is less than 1.5 and therefore changes are required.

Location: Ex1 - Surface water sewer example

Design of surface water sewer

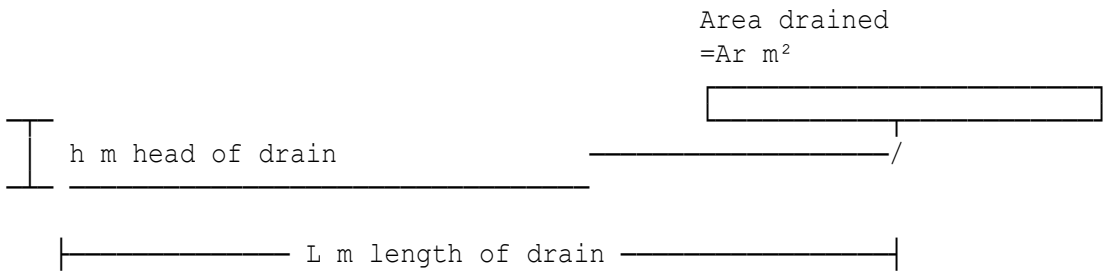

Effective area to be drained	Ar=10000 m²
Impermeability factor	P=0.875
Height of the drain (head)	h=1.2 m
Length of the drain	L=200 m

1. Using Chezy formula

Diameter to be adopted D=375 mm

2. Using Escritt's formulae (see Drainage & Sewerage, published by the Clay Pipe Development Association)

```
Q = 0.00035D^2.62/(1/i)^0.5
V = 26.738D^0.62/(1/i)^0.5
```

Diameter to be adopted	D=375 mm
Velocity	V=26.738*D^0.62/(SQR(1/i)*60)
	=1.3613 m/s

3. To check for drain running partially full; see hydraulic design of drains using Colebrook-White equation in Hydraulics Research Papers No 2 and No 4

Diameter of drain to be used	D=375 mm
Depth of flow as proportion of D	x=0.67098
Velocity of flow	V=1.5424 m/s

Velocity V = -2Zlog(ks/3.7D+2.51v/DZ) for full pipes where

Velocity running full	V=1.3984 m/s

DESIGN SUMMARY

Design discharge	**0.12153 m^3/s**
Gradient of pipe	**1 in 166.67 or 0.006**

(a) Using Chezy formula:

Diameter of pipe	**375 mm**
Velocity of flow	**1.3282 m/s**

(b) Using Escritt's formulae:

Diameter of pipe	**375 mm**
Velocity of flow	**1.3613 m/s**

(c) Using Colebrook-White formula:

Diameter of pipe	**375 mm**
Velocity of flow	**1.5424 m/s**
Proportional depth	**0.67098**
Capacity of pipe	**0.15445 m^3/s**
Velocity running full	**1.3984 m/s**

Location: Ex2 - Foul sewer example

Design of foul sewer

```
                                        Houses discharging
                                        Q' l/s foul sewage
                                          /\  /\  /\  /\  /\  /\
                                         ├─┤├─┤├─┤├─┤├─┤├─┤
┬
│ h m head of drain                 ─────────────────/
┴ ─────────────────────────────────

    ├──────────────── L m length of drain ────────────────┤
```

Height of the drain (head) h=1.4 m
Length of the drain L=100 m

1. Using Chezy formula

Diameter to be adopted D=150 mm

2. Using Escritt's formulae (see Drainage & Sewerage, published by the Clay Pipe Development Association)

```
Q = 0.00035D^2.62/(1/i)^0.5
V = 26.738D^0.62/(1/i)^0.5
```

Diameter to be adopted D=150 mm
Velocity V=26.738*D^0.62/(SQR(1/i)*60)
=1.1782 m/s

3. To check for drain running partially full; see hydraulic design of drains using Colebrook-White equation in Hydraulics Research Papers No 2 and No 4

Diameter of drain to be used D=150 mm

Depth of flow as proportion of D x=0.63287
Velocity of flow V=1.1306 m/s

Velocity V = -2Zlog(ks/3.7D+2.51v/DZ) for full pipes where
Velocity running full V=1.0363 m/s

DESIGN SUMMARY

Design discharge	**0.01333 m³/s**
Gradient of pipe	**1 in 71.429 or 0.014**

(a) Using Chezy formula:

Diameter of pipe	**150 mm**
Velocity of flow	**1.4103 m/s**

(b) Using Escritt's formulae:

Diameter of pipe	**150 mm**
Velocity of flow	**1.1782 m/s**

(c) Using Colebrook-White formula:

Diameter of pipe	**150 mm**
Velocity of flow	**1.1306 m/s**
Proportional depth	**0.63287**
Capacity of pipe	**0.018313 m³/s**
Velocity running full	**1.0363 m/s**

Location: Ex3 - Combined example

Design of combined sewer

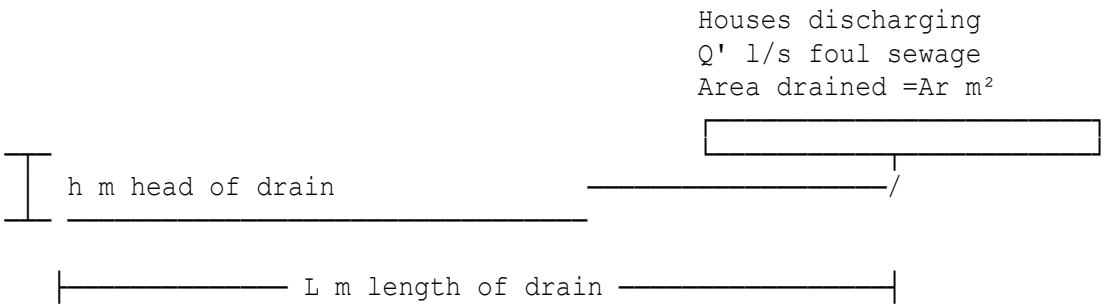

Effective area to be drained	Ar=10000 m²
Impermeability factor	P=0.875
Height of the drain (head)	h=1.2 m
Length of the drain	L=200 m

1. Using Chezy formula

Diameter to be adopted D=375 mm

2. Using Escritt's formulae (see Drainage & Sewerage, published by the Clay Pipe Development Association)

```
Q = 0.00035D^2.62/(1/i)^0.5
V = 26.738D^0.62/(1/i)^0.5
```

Diameter to be adopted	D=375 mm
Velocity	V=26.738*D^0.62/(SQR(1/i)*60)
	=1.3613 m/s

3. To check for drain running partially full; see hydraulic design of drains using Colebrook-White equation in Hydraulics Research Papers No 2 and No 4

Diameter of drain to be used	D=375 mm
Depth of flow as proportion of D	x=0.80943
Velocity of flow	V=1.4081 m/s

Velocity V = -2Zlog(ks/3.7D+2.51v/DZ) for full pipes where

Velocity running full	V=1.2401 m/s

4. Check for self cleansing velocity under dry weather conditions

Depth of flow as proportion of D x=0.13462
Velocity of flow V=0.60059 m/s

DESIGN SUMMARY

Design discharge **0.13486 m³/s**
Gradient of pipe **1 in 166.67 or 0.006**

(a) Using Chezy formula:
Diameter of pipe **375 mm**
Velocity of flow **1.3282 m/s**

(b) Using Escritt's formulae:
Diameter of pipe **375 mm**
Velocity of flow **1.3613 m/s**

(c) Using Colebrook-White formula:
Diameter of pipe **375 mm**
Velocity of flow **1.4081 m/s**
Proportional depth **0.80943**
Capacity of pipe **0.13696 m³/s**
Velocity running full **1.2401 m/s**

Under dry weather conditions:
Design discharge **0.005332 m³/s**
Velocity of flow **0.60059 m/s**
Proportional depth **0.13462**

Location: Flat roof with half-round eaves gutter

Roof drainage gutters - to BS EN 12056-3:2000 (with Amd. No. 17041)

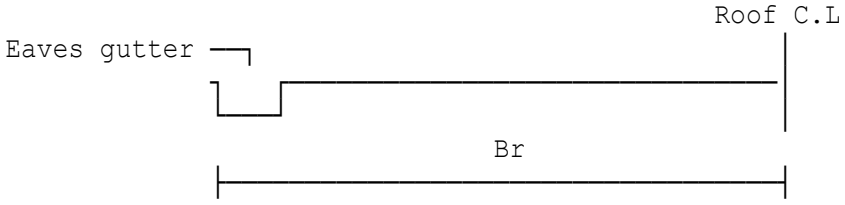

Flat roof

Width of roof (gutter to ridge)	Br=8.65 m
Length of roof to be drained	Lr=6.45 m
Rainfall intensity	r=0.021 l/s/m²
The runoff coefficient	C=1
Depth of water below designed water line	W=75 mm
Length of gutter	L=6.45 m
Gradient of gutter	Ggrad=3 mm/m
Diameter of circular downpipe	D=75 mm

DESIGN SUMMARY	**Gutter is a true half round gutter**	
	Width of gutter	**150 mm**
	Capacity of gutter is	**2.04 l/s**
	Rate of flow of water	**1.1716 l/s**
	Diameter of outlet pipe	**75 mm**

Location: Single pitched roof with half-round eaves gutter

Roof drainage gutters - to BS EN 12056-3:2000 (with Amd. No. 17041)

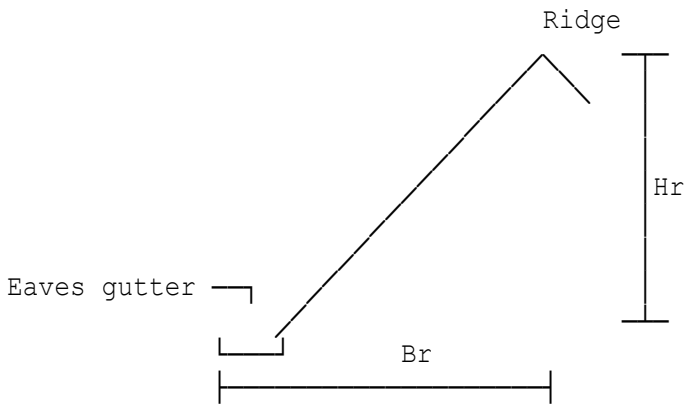

Single pitched roof

Width of roof (gutter to ridge)	Br=8.65 m
Height of roof (gutter to ridge)	Hr=5 m
Length of roof to be drained	Lr=6.45 m
Minimum rainfall intensity rate	r=0.021 l/s/m²
Risk factor	rf=1
The runoff coefficient	C=1
Depth of water below designed water line	W=75 mm
Length of gutter	L=6.45 m
Gradient of gutter	Ggrad=2 mm/m
Diameter of circular downpipe	D=75 mm

DESIGN SUMMARY	**Gutter is a true half round gutter**	
	Width of gutter	**150 mm**
	Capacity of gutter is	**2.04 l/s**
	Rate of flow of water	**1.5103 l/s**
	Diameter of outlet pipe	**75 mm**

Location: Double pitched roof with valley gutter

Roof drainage gutters - to BS EN 12056-3:2000 (with Amd. No. 17041)

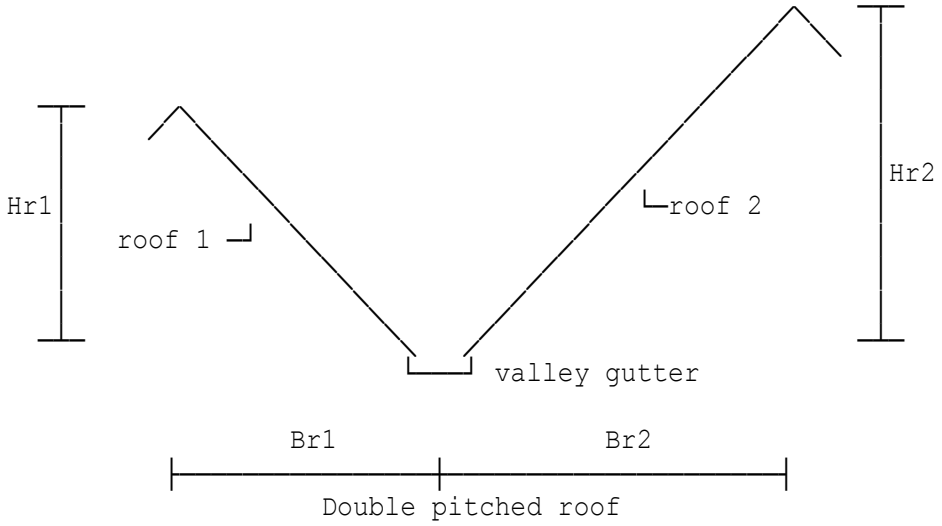

Width from valley to ridge	Br1=6 m
Width from valley to ridge	Br2=15 m
Ridge to valley fall	Hr1=2 m
Valley to ridge rise	Hr2=4 m
Length of roof to be drained	Lr=30 m
Area of wall draining to roof	Awall=50 m²
Minimum rainfall intensity rate	r=0.0208 l/s/m²
Risk factor	rf=1
The runoff coefficient	C=1

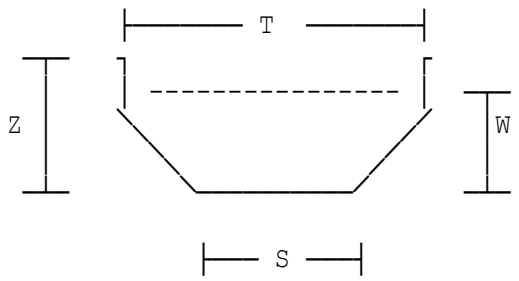

Valley gutter

W = depth below designed water line
T = width of gutter
S = width of sole
Z = total depth of gutter

Width of gutter	T=500 mm
Depth of water	W=179 mm
Width of sole (min 300mm)	S=300 mm
Gutter depth including freeboard	Z=255 mm
Cross sectional area of gutter	Aw=71600 mm²
Length of gutter	L=30 m
Gradient of gutter	Ggrad=5 mm/m
Discharge from second gutter	Q2=3.3 l/s
Critical depth for second gutter	yc2=90 mm

Width of chute	Lw=500 mm
Width of box	Bb=450 mm
Length of box	Lb=500 mm
Assumed diameter of outlet	D=200 mm
Depth of box below gutter	hb=200 mm

DESIGN SUMMARY	**Trapezoidal valley gutter**	
	Width of gutter	**500 mm**
	Total depth of gutter	**255 mm**
	Width of sole	**300 mm**
	Capacity of gutter is	**36.068 l/s**
	Rate of flow of water	**17.548 l/s**
	Sluice/Chute	
	Width of chute in parapet	**500 mm**
	Box receiver	
	Length of box receiver	**500 mm**
	Width of box receiver	**450 mm**
	Depth of box	**200 mm**
	Diameter of outlet pipe	**200 mm**

Location: Single pitched roof with trapezoidal eaves gutter

Roof drainage gutters - to BS EN 12056-3:2000 (with Amd. No. 17041)

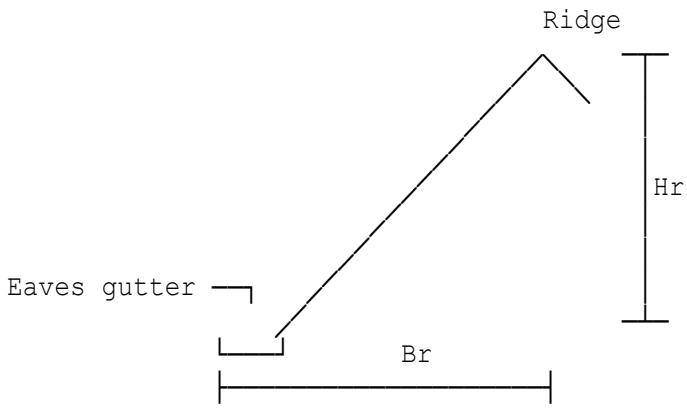

Single pitched roof

Width of roof (gutter to ridge)	Br=6 m
Length of roof to be drained	Lr=20 m
Area of wall draining to roof	Awall=50 m²
Minimum rainfall intensity rate	r=0.021 l/s/m²
Risk factor	rf=1
The runoff coefficient	C=1

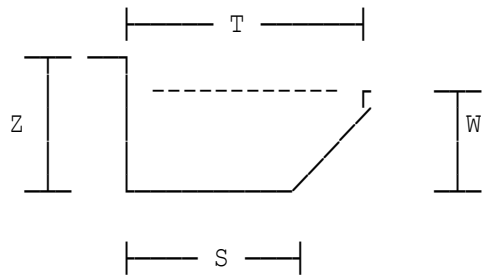

Eaves gutter

W = depth below designed water line
T = width of gutter
S = width of sole
Z = total depth of gutter

Width of gutter	T=150 mm
Depth of water	W=150 mm
Width of sole	S=150 mm
Depth of gutter including freeboard	Z=150 mm
Cross sectional area of gutter	Ae=22500 mm²
Length of gutter	L=20 m
Gradient of gutter	Ggrad=1 mm/m
Width of chute	Lw=400 mm
Width of box	Bb=450 mm
Length of box	Lb=500 mm
Assumed diameter of outlet	D=200 mm
Depth of box below gutter	hb=200 mm

DESIGN SUMMARY	**Gutter is trapezoidal**	
	Width of gutter	**150 mm**
	Total depth of gutter	**150 mm**
	Width of sole	**150 mm**
	Capacity of gutter is	**7.6526 l/s**
	Rate of flow of water	**3.045 l/s**

Sluice/Chute	
Width of chute in parapet	**400 mm**
Box receiver	
Length of box receiver	**500 mm**
Width of box receiver	**450 mm**
Depth of box	**200 mm**
Diameter of outlet pipe	**200 mm**

Location: Double pitched roof with trapezoidal valley gutter

Roof drainage gutters - to BS EN 12056-3:2000 (with Amd. No. 17041)

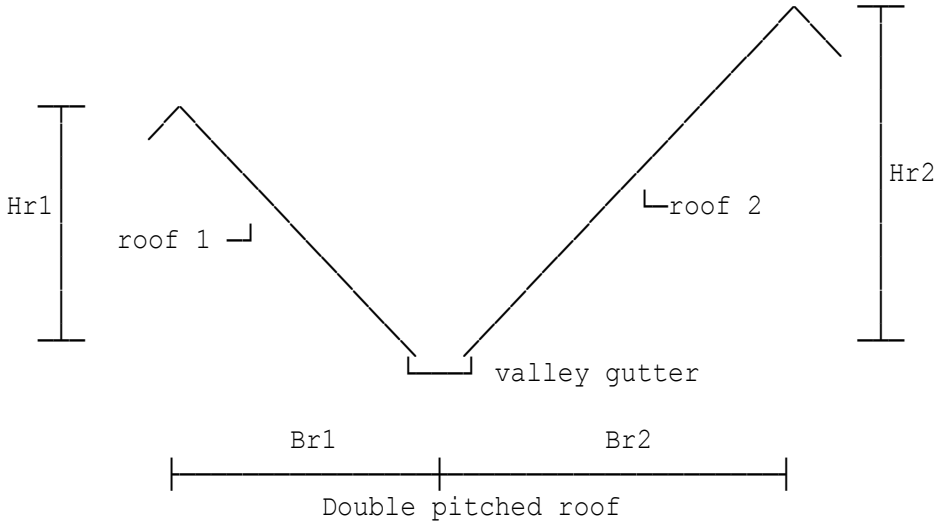

Width from valley to ridge	Br1=6 m
Width from valley to ridge	Br2=15 m
Length of roof to be drained	Lr=30 m
Area of wall draining to roof	Awall=50 m²
Minimum rainfall intensity rate	r=0.021 l/s/m²
Risk factor	rf=1
The runoff coefficient	C=1

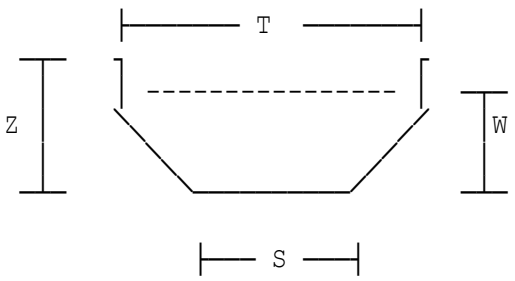

Valley gutter

W = depth below designed water line
T = width of gutter
S = width of sole
Z = total depth of gutter

Width of gutter	T=500 mm
Depth of water	W=178 mm
Width of sole (min 300mm)	S=300 mm
Gutter depth including freeboard	Z=254 mm
Cross sectional area of gutter	Aw=71200 mm²
Length of gutter	L=30 m
Gradient of gutter	Ggrad=1 mm/m
Width of chute	Lw=400 mm

Width of box	Bb=450 mm
Length of box	Lb=500 mm
Assumed diameter of outlet	D=200 mm
Depth of box below gutter	hb=200 mm

DESIGN SUMMARY	**Trapezoidal valley gutter**	
	Width of gutter	**500 mm**
	Total depth of gutter	**254 mm**
	Width of sole	**300 mm**
	Capacity of gutter is	**26.343 l/s**
	Rate of flow of water	**13.755 l/s**
	Sluice/Chute	
	Width of chute in parapet	**400 mm**
	Box receiver	
	Length of box receiver	**500 mm**
	Width of box receiver	**450 mm**
	Depth of box	**200 mm**
	Diameter of outlet pipe	**200 mm**

Location: Flat roof with trapezoidal parapet gutter

Roof drainage gutters - to BS EN 12056-3:2000 (with Amd. No. 17041)

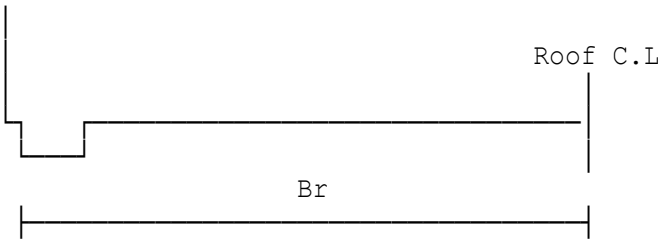

Flat roof with a parapet gutter

Width of roof (gutter to ridge)	Br=8.65 m
Length of roof to be drained	Lr=6.45 m
Rainfall intensity	r=0.021 l/s/m²
The runoff coefficient	C=1

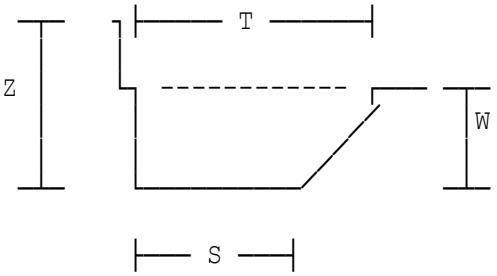

Parapet gutter

W = depth below designed water line
T = width of gutter
S = width of sole
Z = total depth of gutter

Width of gutter	T=400 mm
Depth of water	W=150 mm
Width of sole (min 300mm)	S=300 mm
Gutter depth including freeboard	Z=214 mm
Cross sectional area of gutter	Aw=52500 mm²
Length of gutter	L=6.45 m
Diameter of circular downpipe	D=75 mm

DESIGN SUMMARY	**Trapezoidal parapet gutter**	
	Width of gutter	**400 mm**
	Total depth of gutter	**214 mm**
	Width of sole	**300 mm**
	Capacity of gutter is	**21.988 l/s**
	Rate of flow of water	**1.1716 l/s**
	Diameter of outlet pipe	**75 mm**

Location: Single pitched roof with trapezoidal parapet gutter

Roof drainage gutters - to BS EN 12056-3:2000 (with Amd. No. 17041)

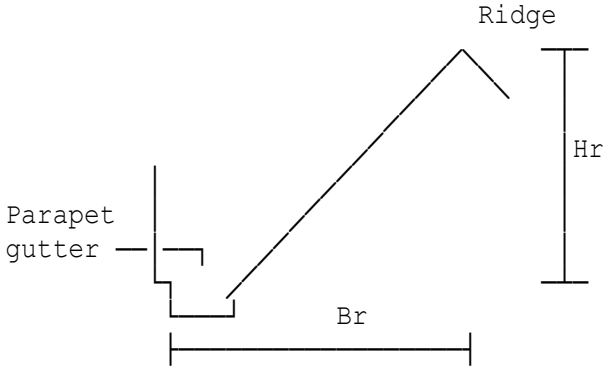

Single pitched roof

Width of roof (gutter to ridge)	Br=8.65 m
Height of roof (gutter to ridge)	Hr=5 m
Length of roof to be drained	Lr=6.45 m
Minimum rainfall intensity rate	r=0.021 l/s/m²
Risk factor	rf=1
The runoff coefficient	C=1

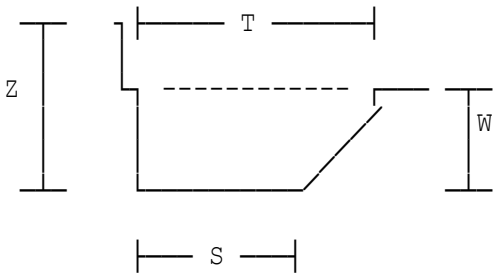

Parapet gutter

W = depth below designed water line
T = width of gutter
S = width of sole
Z = total depth of gutter

Width of gutter	T=400 mm
Depth of water	W=150 mm
Width of sole (min 300mm)	S=300 mm
Gutter depth including freeboard	Z=214 mm
Cross sectional area of gutter	Aw=52500 mm²
Length of gutter	L=6.45 m
Diameter of circular downpipe	D=75 mm

DESIGN SUMMARY	**Trapezoidal parapet gutter**	
	Width of gutter	**400 mm**
	Total depth of gutter	**214 mm**
	Width of sole	**300 mm**
	Capacity of gutter is	**21.988 l/s**
	Rate of flow of water	**1.5103 l/s**
	Diameter of outlet pipe	**75 mm**

Location: Road alignment; vertical curve example

```
              \  /
               /\  PI
             /    \
           ┬       \
      p  / │y.   .   \  q
       /  .└        .  \
     / .               . \
   /.                    . \
PC──────────────────────────PT
/      L/2          L/2      \
  ├──────────┼──────────┤

  ├── x ─┤
```

Road alignment vertical curve

A simple parabolic curve is used.
Reference: see "Highways"
second edition by C A O'Flaherty.
Roads and Traffic in Urban Areas
by IHT and DTp.

y=-(q-p)*x^2/(2*L)

Note as shown here
p is positive (ascending)
q is negative (descending)

Gradient p (as a percentage)	p=6
Gradient q (as a percentage)	q=-3
Design speed	V=50 km/h
K-Value for curve	K=6.5 m
Sight distance required	sd=50 m
Driver's eye height	h1=1.05 m
Object height	h2=0.26 m
Selected curve length	L=60 m
Chainage of intersection point	PIch=120 m
Level of intersection point	PILL=55.5 m

Copyright 1986-2024 Fitzroy Systems Ltd.

Location: Road Alignment Horizontal Transition Curve

Degrees in angle	d=18°
Minutes in angle	m=36 '
Seconds in angle	s=0"
Circular curve radius	R=450 m
Design speed	V=70 km/h
Rate of change of radial accln.	a=0.3 m/s³
Chainage of Intersection point	IC=2524.2 m
Main transition chord length	x=10 m
Main chord length	c=20 m
Balancing percent of radial force	per=45 %
Carriageway width	B=7.6 m

Location: Example 9.6 from Bannister, Raymond & Baker - 7th Edition

Cutting or embankment	
Formation width of road	b=12.5 m
X-fall existing ground (1 in k)	k=12
Side slopes (1 in m)	m=2
Centre line height	h=3.1 m
Side width	w1=(b/2+m*h)*(k/(k-m))=14.94 m
Side width	w2=(b/2+m*h)*(k/(k+m))=10.671 m
Area of cutting or embankment	area=1/(2*m)*((b/2+m*h)*(w1+w2)-b^2/2)=60.184 m²

Location: Example 9.7 from Bannister, Raymond & Baker - 7th Edition

Sections part in cut and part in fill

Formation width of road	b=9.5 m
X-fall existing ground (1 in k)	k=5
Side slopes in fill (1 in m)	m=3
Side slopes in cut (1 in n)	n=1
Centre line height	h=0.5 m
Side width	w1=(k/(k-n))*(b/2+n*h)=6.5625 m
Side width	w2=(k/(k-m))*(b/2-m*h)=8.125 m
Area of fill	areaf=1/2*(b/2-k*h)^2/(k-m)=1.2656 m²
Area of cut	areac=1/2*(b/2+k*h)^2/(k-n)=6.5703 m²

Location: Example 9.7 from Bannister, Raymond & Baker - with -ve 'h'

Sections part in cut and part in fill

Formation width of road	b=9.5 m
X-fall existing ground (1 in k)	k=5
Side slopes in fill (1 in m)	m=1
Side slopes in cut (1 in n)	n=3
Centre line height	h=-0.5 m
Side width	w1=(k/(k-n))*(b/2+n*h)=8.125 m
Side width	w2=(k/(k-m))*(b/2-m*h)=6.5625 m
Area of fill	areaf=1/2*(b/2-k*h)^2/(k-m)=6.5703 m²
Area of cut	areac=1/2*(b/2+k*h)^2/(k-n)=1.2656 m²

Location: Example 9.6 from Bannister, Raymond & Baker - 7th Edition

Embankment on three level section

Formation width of road	b=12.5 m
X-fall left of centre (1 in k)	k=12
X-fall right of centre (1 in l)	l=12
Side slopes (1 in m)	m=2
Centre line height	h=3.1 m
Side width	w1=(b/2+m*h)*(k/(k-m))=14.94 m
Side width	w2=(b/2+m*h)*(l/(l+m))=10.671 m
Area of cross section	area=1/(2*m)*((w1+w2)*(m*h+b/2)-b^2 /2)=60.184 m²

Location: Example 9.9 from Bannister, Raymond & Baker - 7th Edition

Volumes by prismoidal formula
The volume of a prismoid is given by V = D/6 (A1 + 4M + A2)
where A1 & A2 are the areas of the two end faces distance D apart,
M is is the area of the section mid-way between (and not the average
of A1 & A2, see Bannister & Raymond.

Area A1	A1=72 m²
Area A2	A2=139.84 m²
Area of sectn midway betwn A1&A2	M=103.36 m²
Distance between two end faces	D=40 m
Volume of the prismoid	V=D/6*(A1+4*M+A2)=4168.5 m³

Location: Volumes from spot levels; example from Bannister & Raymond

No. of levels (or corners) N=9
General formation level FLG=120 m
Area of each rectangle A=2000 m²
Level number 1 y(1)=130.24 m
No. of rectangles where it occurs n(1)=1
Formation level f(1)=120 m
Level number 2 y(2)=132.15 m
No. of rectangles where it occurs n(2)=2
Formation level f(2)=120 m
Level number 3 y(3)=134.21 m
No. of rectangles where it occurs n(3)=1
Formation level f(3)=120 m
Level number 4 y(4)=132.92 m
No. of rectangles where it occurs n(4)=2
Formation level f(4)=120 m
Level number 5 y(5)=135.75 m
No. of rectangles where it occurs n(5)=4
Formation level f(5)=120 m
Level number 6 y(6)=136.32 m
No. of rectangles where it occurs n(6)=2
Formation level f(6)=120 m
Level number 7 y(7)=136.98 m
No. of rectangles where it occurs n(7)=1
Formation level f(7)=120 m
Level number 8 y(8)=140.03 m
No. of rectangles where it occurs n(8)=2
Formation level f(8)=120 m
Level number 9 y(9)=135.34 m
No. of rectangles where it occurs n(9)=1
Formation level f(9)=120 m

Station Number	Depth of excavation (hn)	Number of rectangles in which it occurs (n)	Product hn x n
1	10.24	1	10.24
2	12.15	2	24.3
3	14.21	1	14.21
4	12.92	2	25.84
5	15.75	4	63
6	16.32	2	32.64
7	16.98	1	16.98
8	20.03	2	40.06
9	15.34	1	15.34
		Σhn x n =	242.61

Therefore volume V=A*sigma/4=121305 m³

Location: Simpson's rule for volumes

Simpson's rule for volumes:

$$V = \frac{D}{3}\left[A(1) + 4.A(2) + 2.A(3) + 4.A(4) + 2.A(n-2) + 4.A(n-1) + A(n)\right]$$

where, n is number of sections having area A(1), A(2) ... A(n),
(n being odd) equally spaced at uniform distance between them = D.

Number of sections (must be odd)	n=3
Distance between each section	D=100 m
Section number 1	A(1)=416.04 m²
Section number 2	A(2)=563.7 m²
Section number 3	A(3)=916.1 m²

Accumulate areas

Area coefficient for section 1	ac=1
	Acum=Acum+ac*A(i)=416.04 m²
Area coefficient for section 2	ac=4
	Acum=Acum+ac*A(i)=2670.8 m²
Area coefficient for section 3	ac=1
	Acum=Acum+ac*A(i)=3586.9 m²
Therefore volume	V=D*Acum/3=119565 m³

Location: Example of setting out group of 6 piles

Number of theodolite stations	N=3
X-coordinate	x(1)=2.88 m
Y-coordinate	y(1)=2.88 m
X-coordinate	x(2)=17.38 m
Y-coordinate	y(2)=20.35 m
X-coordinate	x(3)=26.76 m
Y-coordinate	y(3)=2.92 m
Number of angles to be computed	M=6
Set up theodolite station number	t(1)=1
First sight theodolite station	f(1)=2
Set up theodolite station number	t(2)=1
First sight theodolite station	f(2)=3
Set up theodolite station number	t(3)=2
First sight theodolite station	f(3)=1
Set up theodolite station number	t(4)=2
First sight theodolite station	f(4)=3
Set up theodolite station number	t(5)=3
First sight theodolite station	f(5)=1
Set up theodolite station number	t(6)=3
First sight theodolite station	f(6)=2
Number of piles to be set-out	P=6
Pile No. 1	
X-coordinate of pile	px(1)=20.9 m
Y-coordinate of pile	py(1)=18.08 m
Pile diameter	pd(1)=0.75 m
Pile No. 2	
X-coordinate of pile	px(2)=23.86 m
Y-coordinate of pile	py(2)=18.08 m
Pile diameter	pd(2)=0.75 m
Pile No. 3	
X-coordinate of pile	px(3)=26.76 m
Y-coordinate of pile	py(3)=18.08 m
Pile diameter	pd(3)=0.75 m
Pile No. 4	
X-coordinate of pile	px(4)=20.9 m
Y-coordinate of pile	py(4)=15.15 m
Pile diameter	pd(4)=0.75 m
Pile No. 5	
X-coordinate of pile	px(5)=23.86 m
Y-coordinate of pile	py(5)=15.15 m
Pile diameter	pd(5)=0.75 m
Pile No. 6	
X-coordinate of pile	px(6)=26.76 m
Y-coordinate of pile	py(6)=15.15 m
Pile diameter	pd(6)=0.75 m

SET UP THEOD STATION	FIRST SIGHT STATION	SECOND SIGHT PILE No	ANGLE FOR SETTING OUT TO CENTRE OF PILE DEGREES	MINUTES	SECONDS	ANGLE FROM PILE CENTRE TO PILE SIDE DEGREES	MINUTES	SECONDS
1	2	1	10	9	34.7	0	54	41.2
1	3	1	40	3	6.8	0	54	41.2
2	1	1	96	52	30.2	5	8	11.9
2	3	1	28	53	44	5	8	11.9
3	1	1	68	57	44.2	1	19	19.5
3	2	1	7	9	12	1	19	19.5
1	2	2	14	23	3.2	0	49	45.7
1	3	2	35	49	38.4	0	49	45.7
2	1	2	110	23	12	3	7	51
2	3	2	42	24	25.8	3	7	51
3	1	2	79	15	59.5	1	23	31.8
3	2	2	17	27	27.3	1	23	31.8
1	2	3	17	49	48.4	0	45	32.6
1	3	3	32	22	53.1	0	45	32.6
2	1	3	116	5	17.6	2	13	36.9
2	3	3	48	6	31.3	2	13	36.9
3	1	3	90	5	45.5	1	25	2.7
3	2	3	28	17	13.3	1	25	2.7
1	2	4	16	3	22.2	0	59	8.2
1	3	4	34	9	19.3	0	59	8.2
2	1	4	73	47	14.8	3	25	25.4
2	3	4	5	48	28.6	3	25	25.4
3	1	4	64	29	40.5	1	35	4.3
3	2	4	2	41	8.3	1	35	4.3
1	2	5	19	59	11.8	0	53	2.6
1	3	5	30	13	29.8	0	53	2.6
2	1	5	90	56	47.4	2	35	12.9
2	3	5	22	58	1.2	2	35	12.9
3	1	5	76	45	22.6	1	42	34.8
3	2	5	14	56	50.4	1	42	34.8
1	2	6	23	6	45.2	0	48	1.1
1	3	6	27	5	56.4	0	48	1.1
2	1	6	100	41	23.1	2	0	13.6
2	3	6	32	42	36.9	2	0	13.6
3	1	6	90	5	45.5	1	45	25.5
3	2	6	28	17	13.3	1	45	25.5

Location: Wall setting out

Co-ordinate Geometry

Define a Point

Point number	Co-ordinates x	Co-ordinates y	Description
1	1000	2000	SOP 1

Define a Point

Point number	Co-ordinates x	Co-ordinates y	Description
2	6000	2000	SOP 2

Define a Point by Angle and Distance

Point number J jj(1)=2
Point number K kj(1)=1
Point number L lj(1)=3
Distance D from Point J dj(1)=3000
Angle A in degrees (Clockwise positive) aj(1)=120°
Description of Point 3 SOP 3

Line runs from Point 2 to Point 1
Distance 3000 along a line defined by a clockwise angle 120°
locates Point 3

Point number	Co-ordinates x	Co-ordinates y	Description
3	7500	4598.1	SOP 3

Generate a Parallel Line

Point number J jk(1)=1
Point number K kk(1)=2
Point number L lk(1)=6
Point number M mk(1)=11
Off-set to new line D dk(1)=-1000
Description of Point 6 SOP 6
Description of Point 11 TEMP 11

First line runs from Point 1 to Point 2
Parallel line off-set by -1000 from first line
Second line runs from Point 6 to Point 11

Point number	Co-ordinates x	Co-ordinates y	Description
6	1000	3000	SOP 6
11	6000	3000	TEMP 11

Generate a Parallel Line

Point number J	jk(2)=2
Point number K	kk(2)=3
Point number L	lk(2)=12
Point number M	mk(2)=4
Off-set to new line D	dk(2)=-750
Description of Point 12	TEMP 12
Description of Point 4	SOP 4

First line runs from Point 2 to Point 3
Parallel line off-set by -750 from first line
Second line runs from Point 12 to Point 4

Point number	Co-ordinates x	Co-ordinates y	Description
12	5350.5	2375	TEMP 12
4	6850.5	4973.1	SOP 4

Intersection of Two Lines

Point number J	jh(1)=6
Point number K	kh(1)=11
Point number L	lh(1)=12
Point number M	mh(1)=4
Intersection point number N	nh(1)=5

Intersection Point 5 of line from Point 6 to
Point 11 with line from Point 12 to Point 4

Point number	Co-ordinates x	Co-ordinates y	Description
5	5711.3	3000	SOP 5

Table of Points

Point number	Co-ordinates x	Co-ordinates y	Description
1	1000	2000	SOP 1
2	6000	2000	SOP 2
3	7500	4598.1	SOP 3
4	6850.5	4973.1	SOP 4
5	5711.3	3000	SOP 5
6	1000	3000	SOP 6

Distance Between Two Points

Point number J je(1)=1
Point number K ke(1)=2

Distance from Point 1 to Point 2 is 5000

Distance Between Two Points

Point number J je(2)=2
Point number K ke(2)=3

Distance from Point 2 to Point 3 is 3000

Distance Between Two Points

Point number J je(3)=3
Point number K ke(3)=4

Distance from Point 3 to Point 4 is 750

Distance Between Two Points

Point number J je(4)=4
Point number K ke(4)=5

Distance from Point 4 to Point 5 is 2278.3

Distance Between Two Points

Point number J je(5)=5
Point number K ke(5)=6

Distance from Point 5 to Point 6 is 4711.3

Distance Between Two Points

Point number J je(6)=6
Point number K ke(6)=1

Distance from Point 6 to Point 1 is 1000

Location: Example from 'Surveying' by Bannister & Raymond

Number of stations	N=7
X coordinate of station 1	x(1)=1000 m
Y coordinate of station 1	y(1)=2000 m
Degrees in angle	d(1)=187°
Minutes in angle	m(1)=22 '
Seconds in angle	s(1)=20"
Length	l(1)=310.207 m
Degrees in angle	d(2)=178°
Minutes in angle	m(2)=19 '
Seconds in angle	s(2)=0"
Length	l(2)=471.762 m
Degrees in angle	d(3)=118°
Minutes in angle	m(3)=21 '
Seconds in angle	s(3)=45"
Length	l(3)=430.087 m
Degrees in angle	d(4)=94°
Minutes in angle	m(4)=42 '
Seconds in angle	s(4)=25"
Length	l(4)=507.243 m
Degrees in angle	d(5)=158°
Minutes in angle	m(5)=7 '
Seconds in angle	s(5)=30"
Length	l(5)=530.206 m
Degrees in angle	d(6)=89°
Minutes in angle	m(6)=3 '
Seconds in angle	s(6)=55"
Length	l(6)=331.801 m
Degrees in angle	d(7)=167°
Minutes in angle	m(7)=15 '
Seconds in angle	s(7)=50"
Length	l(7)=422.493 m
Degrees in angle	d(8)=94°
Minutes in angle	m(8)=10 '
Seconds in angle	s(8)=0"

SUMMARY

Station number	**X coordinate (m)**	**Y coordinate (m)**
1	**1000**	**2000**
2	**960.15421**	**1692.377**
3	**913.334765**	**1222.96762**
4	**1269.62781**	**982.185927**
5	**1587.09201**	**1377.77935**
6	**1740.97017**	**1885.17674**
7	**1421.88825**	**1976.34081**

Location: Tell-tales located on NE corner of store

Crack movement by tell-tales

```
A┼    ▌          ┬
 | \  ▌          │
 |   \▌          │
 |    ▌\b        │y
 |    ▌  \       │
c|    ▌    \     │
 |    ▌     ┼C   ┴
 |    ▌   /
 |    ▌/a
 |  / ▌
B┼    ▌◄──denotes crack
      ▌

 ├──── x ────┤
```

Tell-tales are located at positions A, B & C. Tell tales A & B are approximately parallel to the crack denoted thus: ▌. The dimensions a, b & c are measured by micrometer at various time intervals.

From the initial readings the angle at A is computed by trigonometry.

Let s = (a+b+c)/2 then:

$$\sin(A) = 2/bc \sqrt{s(s-a)(s-b)(s-c)}$$

then compute: x = b.sin(A) & y = b.cos(A).

Repeat for final condition and the difference between the two sets gives the movements normal and parallel to the crack.

Initial dimensions	a=120 mm
	b=103.92 mm
	c=60 mm
Final dimensions	a'=119.18 mm
	b'=108.34 mm

Crack movements

Change in dimension normal to AB 4.0073 mm (+ve denotes opening)
parallel to AB -9.4421 mm (+ve in direction of A)

Location: Table for checking beam deflections

Elastic modulus for beam	Em=205 kN/mm²
Smallest span to be considered	smin=6 m
Largest span to be considered	smax=8 m
Increment in length of span	sinc=2 m
Smallest service load considered	Wmin=50 kN
Largest service load considered	Wmax=300 kN
Increment in service load	Winc=50 kN
Smallest inertia to be considered	Imin=2000 cm⁴
Largest inertia to be considered	Imax=20000 cm⁴
Increment in inertia	Iinc=2000 cm⁴

Table of maximum deflections for 6 m span (Span/300 =20 mm)
Table of maximum deflections for 8 m span (Span/300 =27 mm)

Location: Shears, moments and deflections of beams

Shear, moment and deflection formulas for beams generally taken from 'Formulas for Stress and Strain' by Roark, published by McGraw-Hill with additions from 'Steel Designer's Manual'.

Inertia of beam I=0.294E-3 m⁴
Elastic modulus for beam E=205E6 kN/m²

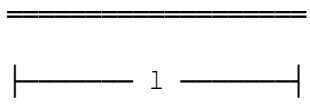

Length of beam l=3 m

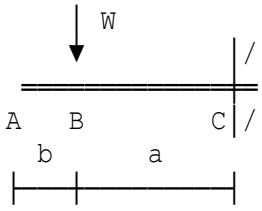

M (moment) is positive when clockwise;
V (shear) is positive when upward;
y (deflection) is positive when upward;
W is positive when downward.

Magnitude of load W=10 kN
Distance from end C to load a=3 m
Maximum shear V=-W=-10 kN (B to C)
Maximum bending moment M=-W*a=-30 kNm at C
Maximum deflection y=-(W/(6*E*I))*(3*a^2*l-a^3)
=-0.0014933 m

Location: Beams under combined axial and transverse loading

Formulas for beams under combined axial & transverse loading, Table VI from 'Formulas for Stress and Strain' by Roark, published McGraw-Hill.

Young's modulus for beam	E=205E6 kN/m²
Inertia of beam	I=4.77E-6 m⁴
Length of beam	l=3 m
Axial load	P=150 kN

Moments are positive when clockwise, negative when anti-clockwise. Deflections in y direction are positive when upwards, negative when downwards. Beam slope with horizontal (theta) positive when upward to the right.

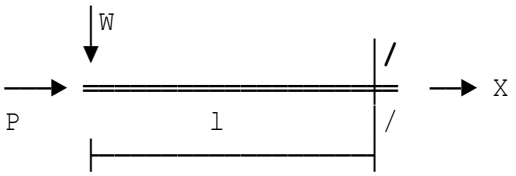

Cantilever beam under axial compression & transverse end load

PL on cantilever end (+ve down)	W=10 kN
Maximum moment	M=-W*j*TAN(U)=-61.101 kNm (at x=l)
Maximum deflection	y=-W*(j*TAN(U)-l)/P=-0.20734 m (at x =0)
Maximum slope	theta=W*((1-COS(U))/COS(U))/P =0.10624 radians

Location: Beams under combined axial and transverse loading

Formulas for beams under combined axial & transverse loading, Table VI from 'Formulas for Stress and Strain' by Roark, published McGraw-Hill.

Young's modulus for beam	E=1.6E6 kN/m²
Inertia of beam	I=13.5 m⁴
Length of beam	l=100 m
Axial load	P=10000 kN

Moments are positive when clockwise, negative when anti-clockwise. Deflections in y direction are positive when upwards, negative when downwards. Beam slope with horizontal (theta) positive when upward to the right.

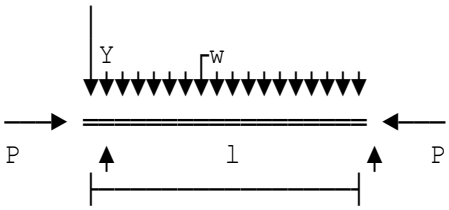

Simply supported beam under axial compression & uniform transverse load

UDL on SS beam (+ve down)	w=3 kN/m
Cross-sectional area of the strut	A=18 m²
Dist. from n.a. to outside fibre	h=1.5 m
Yield stress	py=5000 kN/m²
Maximum moment	M=c1*(c2-1)=7162 kNm (at x=l/2)
Maximum deflection	y=-c1*(c2-1-U^2/8)/P=-0.3412 m (at x =l/2)
Maximum slope	theta=-w*j*(-U/2+c3)/P =-0.01083 radians (at x=0)

Location: Beams under combined axial and transverse loading

Formulas for beams under combined axial & transverse loading, Table VI from 'Formulas for Stress and Strain' by Roark, published McGraw-Hill.

Young's modulus for beam	E=30.464E6 kN/m²
Inertia of beam	I=0.018565 m⁴
Length of beam	l=60 m
Axial load	P=500 kN

Moments are positive when clockwise, negative when anti-clockwise. Deflections in y direction are positive when upwards, negative when downwards. Beam slope with horizontal (theta) positive when upward to the right.

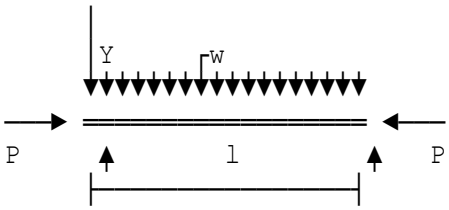

Simply supported beam under axial compression & uniform transverse load

UDL on SS beam (+ve down)	w=0.83 kN/m
Cross-sectional area of the strut	A=0.16608 m²
Dist. from n.a. to outside fibre	h=0.5 m
Yield stress	py=17920 kN/m²
Maximum moment	M=c1*(c2-1)=556.47 kNm (at x=l/2)
Maximum deflection	y=-c1*(c2-1-U^2/8)/P
	=-0.36594 m (at x=l/2)
Maximum slope	theta=-w*j*(-U/2+c3)/P
	=-0.01941 radians (at x=0)

Location: Two span continuous beam without cantilevers

```
LH end                                        RH end
═══════════════════════════════════════════════════
  ■       span 1        ■     span n etc.     ■
  ├─────────────────────┼─────────────────────┤
  │   Inertia I(1)      │     Inertia I(n)    │
  │    Length l(1)      │      Length l(n)    │
```

If no cantilever at left hand or right hand end, then cantilever moment is zero, Clockwise FEM's are positive.

No. of spans excluding cantilevers n=2

DL FEM for cantilever at LHE	DLlhcm=0 kNm
LL FEM for cantilever at LHE	LLlhcm=0 kNm
DL FEM for cantilever at RHE -ve	DLrhcm=0 kNm
LL FEM for cantilever at RHE	LLrhcm=0 kNm
Total No. of concentrated loads	Nc=1
Total number of UDL's	Nu=1
Span number containing load	Sc(1)=2
Distance from left hand end	Lc(1)=6 m
Characteristic dead load	DLc(1)=60 kN
Characteristic live load	LLc(1)=60 kN
Span number containing UDL	Su(1)=1
Distance from left end to start	Lau(1)=0 m
Distance from left end to end	Lbu(1)=12 m
Characteristic dead load	DLu(1)=10 kN/m
Characteristic live load	LLu(1)=20 kN/m
Partial safety factor for DL	gdl=1.4
Partial safety factor for LL	gll=1.6

Location: Three span beam with cantilevers

```
LH end                                    RH end
═══════════════════════════════════════════════
 ■      span 1        ■    span n etc.     ■
 ├────────────────────┼────────────────────┤
 │   Inertia I(1)     │    Inertia I(n)    │
 │    Length l(1)     │     Length l(n)    │
```

If no cantilever at left hand or right hand end, then cantilever moment is zero, Clockwise FEM's are positive.

No. of spans excluding cantilevers n=3

DL FEM for cantilever at LHE	DLlhcm=112 kNm
LL FEM for cantilever at LHE	LLlhcm=103 kNm
DL FEM for cantilever at RHE -ve	DLrhcm=-112 kNm
LL FEM for cantilever at RHE	LLrhcm=-103 kNm
Total No. of concentrated loads	Nc=3
Total number of UDL's	Nu=4
Span number containing load	Sc(1)=1
Distance from left hand end	Lc(1)=6 m
Characteristic dead load	DLc(1)=30 kN
Characteristic live load	LLc(1)=35 kN
Span number containing load	Sc(2)=2
Distance from left hand end	Lc(2)=3.5 m
Characteristic dead load	DLc(2)=45 kN
Characteristic live load	LLc(2)=49 kN
Span number containing load	Sc(3)=3
Distance from left hand end	Lc(3)=5.5 m
Characteristic dead load	DLc(3)=45 kN
Characteristic live load	LLc(3)=49 kN
Span number containing UDL	Su(1)=1
Distance from left end to start	Lau(1)=0 m
Distance from left end to end	Lbu(1)=12 m
Characteristic dead load	DLu(1)=10 kN/m
Characteristic live load	LLu(1)=20 kN/m
Span number containing UDL	Su(2)=2
Distance from left end to start	Lau(2)=0 m
Distance from left end to end	Lbu(2)=3.5 m
Characteristic dead load	DLu(2)=23 kN/m
Characteristic live load	LLu(2)=28 kN/m
Span number containing UDL	Su(3)=2
Distance from left end to start	Lau(3)=3.5 m
Distance from left end to end	Lbu(3)=12 m
Characteristic dead load	DLu(3)=10 kN/m
Characteristic live load	LLu(3)=12 kN/m
Span number containing UDL	Su(4)=3
Distance from left end to start	Lau(4)=0 m
Distance from left end to end	Lbu(4)=9 m
Characteristic dead load	DLu(4)=9 kN/m
Characteristic live load	LLu(4)=7 kN/m
Partial safety factor for DL	gdl=1.4
Partial safety factor for LL	gll=1.6

Location: Four span beam with cantilever on right - unfactored loads

```
LH end                                        RH end
═══════════════════════════════════════════════
 ■       span 1        ■     span n etc.     ■
 ├─────────────────────┼─────────────────────┤
 │   Inertia I(1)      │     Inertia I(n)    │
 │    Length l(1)      │      Length l(n)    │
```

If no cantilever at left hand or right hand end, then cantilever moment is zero, Clockwise FEM's are positive.

No. of spans excluding cantilevers n=4

DL FEM for cantilever at LHE	DLlhcm=0 kNm
LL FEM for cantilever at LHE	LLlhcm=0 kNm
DL FEM for cantilever at RHE -ve	DLrhcm=-112 kNm
LL FEM for cantilever at RHE	LLrhcm=-103 kNm
Total No. of concentrated loads	Nc=4
Total number of UDL's	Nu=4
Span number containing load	Sc(1)=1
Distance from left hand end	Lc(1)=6 m
Characteristic dead load	DLc(1)=30 kN
Characteristic live load	LLc(1)=35 kN
Span number containing load	Sc(2)=1
Distance from left hand end	Lc(2)=7 m
Characteristic dead load	DLc(2)=30 kN
Characteristic live load	LLc(2)=35 kN
Span number containing load	Sc(3)=1
Distance from left hand end	Lc(3)=8 m
Characteristic dead load	DLc(3)=30 kN
Characteristic live load	LLc(3)=35 kN
Span number containing load	Sc(4)=1
Distance from left hand end	Lc(4)=9 m
Characteristic dead load	DLc(4)=30 kN
Characteristic live load	LLc(4)=35 kN
Span number containing UDL	Su(1)=1
Distance from left end to start	Lau(1)=0 m
Distance from left end to end	Lbu(1)=12 m
Characteristic dead load	DLu(1)=10 kN/m
Characteristic live load	LLu(1)=20 kN/m
Span number containing UDL	Su(2)=2
Distance from left end to start	Lau(2)=0 m
Distance from left end to end	Lbu(2)=8 m
Characteristic dead load	DLu(2)=23 kN/m
Characteristic live load	LLu(2)=28 kN/m
Span number containing UDL	Su(3)=3
Distance from left end to start	Lau(3)=0 m
Distance from left end to end	Lbu(3)=5 m
Characteristic dead load	DLu(3)=23 kN/m
Characteristic live load	LLu(3)=28 kN/m
Span number containing UDL	Su(4)=4
Distance from left end to start	Lau(4)=0 m
Distance from left end to end	Lbu(4)=6 m
Characteristic dead load	DLu(4)=23 kN/m
Characteristic live load	LLu(4)=28 kN/m

Location: Beam at A/1

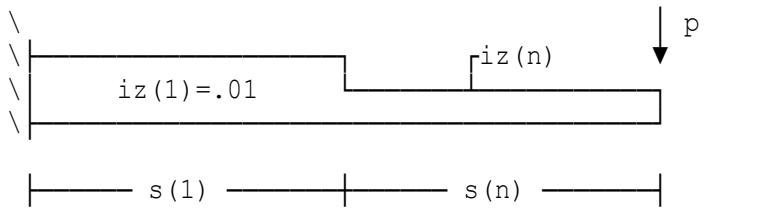

Cantilever has 'n' segments with inertias iz(1)-iz(n) and spans s(1)-s(n) in order, left to right.

Number of segments in cantilever	n=2
End point load	p=1 kN
Young's modulus	e=1E6 kN/m²
Length of segment 1	s(i)=1.2 m (left to right)
Inertia of segment 1	iz(i)=0.01 m⁴ (left to right)
Length of segment 2	s(i)=1.8 m (left to right)
Inertia of segment 2	iz(i)=0.005 m⁴ (left to right)
Total length of cantilever	3 m
Maximum moment	mm=p*l=3 kNm
Area of bmd rectangular segment	ar=p*l*s(i)=2.16 kNm²
Lever arm of rectangular segment	lr=l+s(i)/2=2.4 m
Area of bmd triangular segment	at=p*s(i)^2/2=0.72 kNm²
Lever arm of triangular segment	lt=l+2*s(i)/3=2.6 m
Cumulate rotation components	theta=theta+(ar+at)/(e*iz(i)) =0.288E-3 radians
Cumulate deflection components	delta=delta+(ar*lr+at*lt)/(e*iz(i)) =0.7056E-3 m
Area of bmd rectangular segment	ar=p*l*s(i)=-0.39968E-15 kNm²
Lever arm of rectangular segment	lr=l+s(i)/2=0.9 m
Area of bmd triangular segment	at=p*s(i)^2/2=1.62 kNm²
Lever arm of triangular segment	lt=l+2*s(i)/3=1.2 m
Cumulate rotation components	theta=theta+(ar+at)/(e*iz(i)) =0.612E-3 radians
Cumulate deflection components	delta=delta+(ar*lr+at*lt)/(e*iz(i)) =0.0010944 m

Location: Simply supported beam

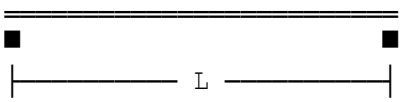

Elastic modulus E=205E6 kN/m²
Beam span L=3 m
Inertia about major axis I=4.77E-6 m⁴
Dead load factor gamd=1.4
Live load factor gami=1.6
All loads are positive downwards, reactions are positive upwards, sagging moments are positive.

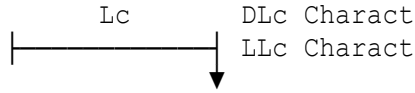

DLc Characteristic dead point load
LLc Characteristic live point load

Distances are measured from left hand support

Distance from left support Lc(1)=1.2 m
Characteristic dead load DLc(1)=2 kN
Characteristic live load LLc(1)=2.4 kN

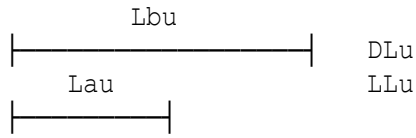

DLu Characteristic dead UDL
LLu Characteristic live UDL

Distances are measured from left hand support

Dist. from left support to start Lau(1)=0 m
Distance from left support to end Lbu(1)=1.2 m
Characteristic dead load DLu(1)=0.8 kN/m
Characteristic live load LLu(1)=0.4 kN/m
Dist. from left support to start Lau(2)=1.2 m
Distance from left support to end Lbu(2)=3 m
Characteristic dead load DLu(2)=1.1 kN/m
Characteristic live load LLu(2)=1.4 kN/m

BMs at 20th points, from left to right (sagging is positive)

0	1.1374	2.2352	3.2935	4.3121	5.2911
	6.2305	7.1303	7.9906	7.7925	7.5093
	7.1411	6.6878	6.1495	5.5262	4.8178
	4.0243	3.1458	2.1823	1.1337	0

Factored maximum span bending moment 7.9906 kNm
(the factors are 1.4 & 1.6)

End shears

Shear force at left hand end 7.7148 kN
Shear force at right hand end 7.8412 kN

Unfactored dead shear at LHE 2.562 kN
Unfactored live shear at LHE 2.58 kN
Unfactored dead shear at RHE 2.378 kN

Unfactored live shear at RHE 2.82 kN

Midspan deflections

Unfactored dead load deflection	0.0021615 m
Unfactored live load deflection	0.0024433 m
Total dead & live deflections	0.0046048 m
Span:defln ratio for dead load	1387.9
Span:defln ratio for live load	1227.9
Span:defln ratio for total load	651.5
Shear area for beam	Ay=0.5334E-3 m²
Total unfactored dead & live	WT'=10.34 kN

If total unfactored dead & live load applied as a UDL,

additional defln due to shear	dsu=WT'*L/(8*Ay*G)=92.018E-6 m
Approximate defln due to shear	ds=dsu*M/((gamd+gami)/2)/(WT'*L/8) =0.12642E-3 m
Total dead + live + shear defln	dt=dld+ild+ds=0.0047312 m

Location: SS beam with UDL, point & triangular loads

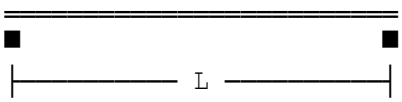

Elastic modulus E=7.9E6 kN/m²
Beam span L=4 m
Inertia about major axis I=65.104E-6 m⁴
Dead load factor gamd=1.4
Live load factor gami=1.6
All loads are positive downwards, reactions are positive upwards, sagging moments are positive.

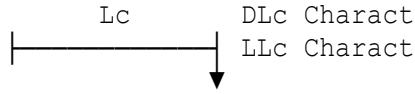

DLc Characteristic dead point load
LLc Characteristic live point load

Distances are measured from left hand support

Distance from left support Lc(1)=2 m
Characteristic dead load DLc(1)=2 kN
Characteristic live load LLc(1)=3 kN

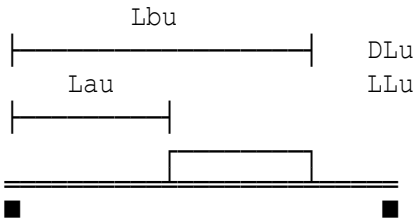

DLu Characteristic dead UDL
LLu Characteristic live UDL

Distances are measured from left hand support

Dist. from left support to start Lau(1)=0 m
Distance from left support to end Lbu(1)=4 m
Characteristic dead load DLu(1)=0.5 kN/m
Characteristic live load LLu(1)=0.3 kN/m

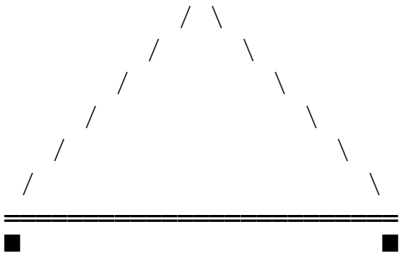

Loads are measured at centre of span in kN/m units where:
DLt Characteristic dead kN/m
LLt Characteristic live kN/m

Characteristic dead ld at centre DLt(1)=3 kN/m
Characteristic live ld at centre LLt(1)=1 kN/m

Loads are measured at right support in kN/m units where:
DLr Characteristic dead kN/m
LLr Characteristic live kN/m

Characteristic dead load at right DLr(1)=1 kN/m
Characteristic live load at right LLr(1)=1 kN/m

BMs at 20th points, from left to right (sagging is positive)

0	2.7635	5.4507	8.0322	10.479	12.762
	14.851	16.718	18.334	19.669	20.693
	19.867	18.718	17.264	15.523	13.512
	11.247	8.7462	6.0267	3.1055	0

Factored maximum span bending moment 20.693 kNm
(the factors are 1.4 & 1.6)

End shears

Shear force at left hand end 13.96 kN
Shear force at right hand end 15.96 kN

Unfactored dead shear at LHE 5.6667 kN
Unfactored live shear at LHE 3.7667 kN
Unfactored dead shear at RHE 6.3333 kN
Unfactored live shear at RHE 4.4333 kN

Midspan deflections

Unfactored dead load deflection 0.024109 m
Unfactored live load deflection 0.01711 m
Total dead & live deflections 0.041219 m
Span:defln ratio for dead load 165.91
Span:defln ratio for live load 233.78
Span:defln ratio for total load 97.042
Shear area for beam Ay=0.0125 m²
Total unfactored dead & live WT'=20.2 kN
If total unfactored dead & live load applied as a UDL,
additional defln due to shear dsu=WT'*L/(8*Ay*G)=0.0016365 m
Approximate defln due to shear ds=dsu*M/((gamd+gami)/2)/(WT'*L/8)
=0.0022352 m
Total dead + live + shear defln dt=dld+ild+ds=0.043455 m

Location: Lean-to type 1

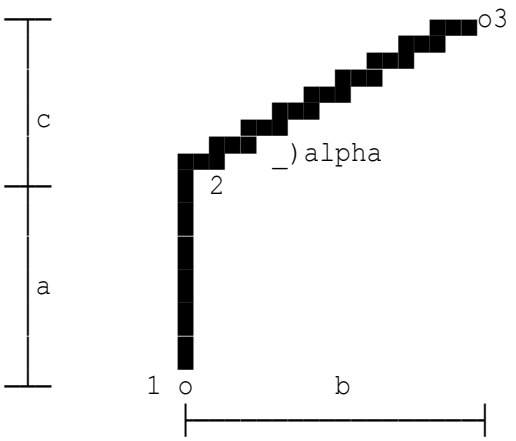

Length of non-sloping member a=4 m
Horiz projectn of sloping member b=3 m
Sloping membr project on vertical c=2 m
Moment of inertia of member 1-2 I12=8.38E-6 m^4
Moment of inertia of member 2-3 I23=4.77E-6 m^4
Notation 1->2 denotes: at joint 1 in the member joining joints 1 & 2
Loads and reactions are positive in the directions shown.

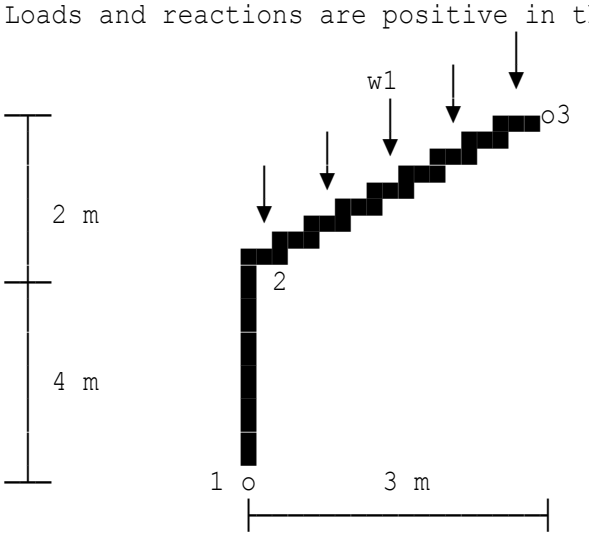

Vertical load per unit length w1=2 kN/m
Moment at 2 (+ve hogging) M=(w*r^2/8)*(I12/a)/(I12/a+I23/r)
=1.6575 kNm
Horizontal react at 1 (+ve right) H1=M/a=0.41437 kN
Horizontal react at 3 (+ve left) H3=0.41437 kN
Vertical reaction at 3 (+ve up) V3=(w1*r*b/2-H1*(a+c))/b=2.7768 kN
Vertical reaction at 1 (+ve up) V1=w1*r-V3=4.4343 kN
Axial force 1->2 (+ve compressn) F1=V1=4.4343 kN
Axial force 2->3 (+ve compressn) F2=V1*SIN(alpha)+H1*COS(alpha)
=2.8045 kN
Shear force 2->3 S2=V1*COS(alpha)-H1*SIN(alpha)
=3.4597 kN

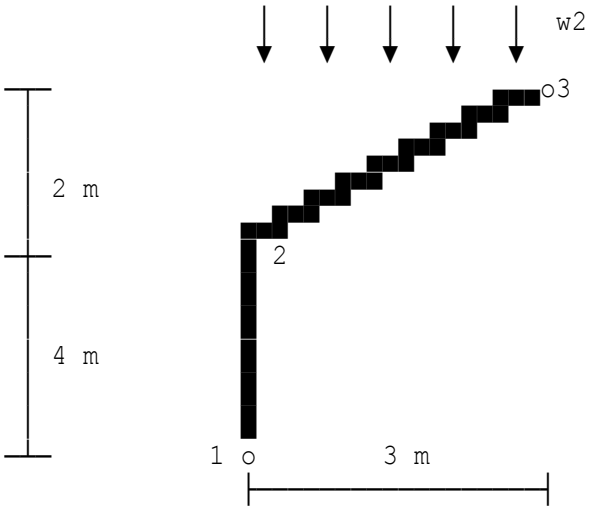

Plan load per unit length	w2=0.8 kN/m
Moment at 2 (+ve hogging)	M=(w*r^2/8)*(I12/a)/(I12/a+I23/r) =0.55164 kNm
Horizontal react at 1 (+ve right)	H1=M/a=0.13791 kN
Horizontal react at 3 (+ve left)	H3=0.13791 kN
Vertical reaction at 3 (+ve up)	V3=(w2*b*b/2-H1*(a+c))/b=0.92418 kN
Vertical reaction at 1 (+ve up)	V1=w2*b-V3=1.4758 kN
Axial force 1->2 (+ve compressn)	F1=V1=1.4758 kN
Axial force 2->3 (+ve compressn)	F2=V1*SIN(alpha)+H1*COS(alpha) =0.93339 kN
Shear force 2->3	S2=V1*COS(alpha)-H1*SIN(alpha) =1.1515 kN

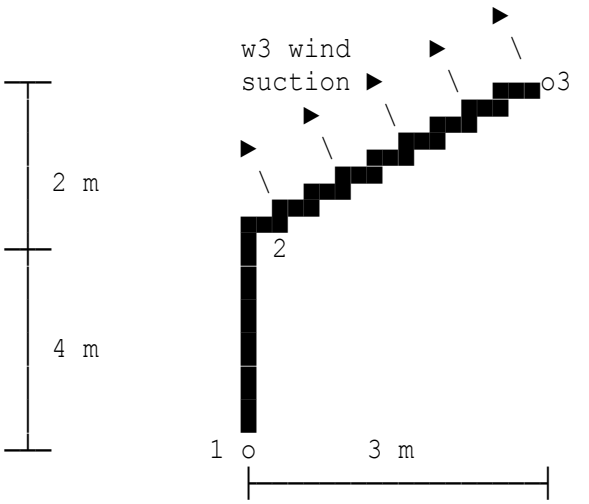

Suction on rafter (+ve)	w3=0.75 kN/m
Moment at 2 (+ve hogging)	M=(w*r^2/8)*(I12/a)/(I12/a+I23/r) =-0.74702 kNm
Horizontal react at 1 (+ve right)	H1=M/a=-0.18675 kN
Horizontal react at 3 (+ve left)	H3=H1-w3*r*SIN(alpha)=-1.6868 kN
Vertical reaction at 3 (+ve up)	V3=(-w3*r^2/2-M-H3*c)/b=-0.25149 kN
Vertical reaction at 1 (+ve up)	V1=-w3*r*COS(alpha)-V3=-1.9985 kN
Axial force 1->2 (+ve compressn)	F1=V1=-1.9985 kN
Axial force 2->3 (+ve compressn)	F2=V1*SIN(alpha)+H1*COS(alpha) =-1.264 kN
Shear force 2->3	S2=V1*COS(alpha)-H1*SIN(alpha) =-1.5593 kN

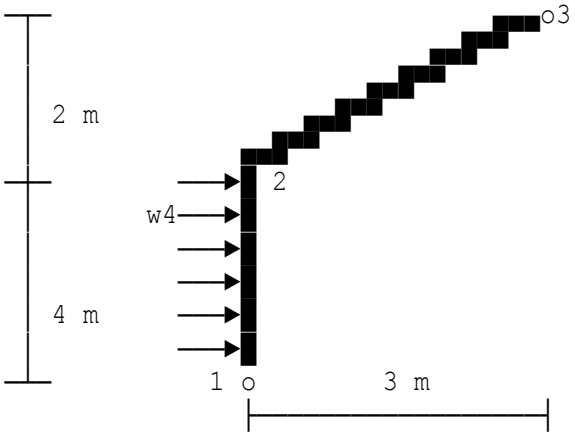

Wind on side (+ve to left) w4=0.8 kN/m
Moment at 2 (+ve hogging) M=(w4*a^2/8)*(I23/r)/(I12/a+I23/r)
=0.6193 kNm
Horizontal react at 1 (+ve right) H1=(M-w4*a^2/2)/a=-1.4452 kN
Horizontal react at 3 (+ve left) H3=H1+w4*a=1.7548 kN
Vertical reaction at 3 (+ve up) V3=(-M-H3*c)/b=-1.3763 kN
Vertical reaction at 1 (+ve up) V1=-V3=1.3763 kN
Axial force 1->2 (+ve compressn) F1=V1=1.3763 kN
Shear force at top of vertical S=H1+w4*a=1.7548 kN
Axial force 2->3 (+ve compressn) F2=V1*SIN(alpha)+S*COS(alpha)
=2.2235 kN
Shear force 2->3 S2=V1*COS(alpha)-S*SIN(alpha)
=0.17176 kN

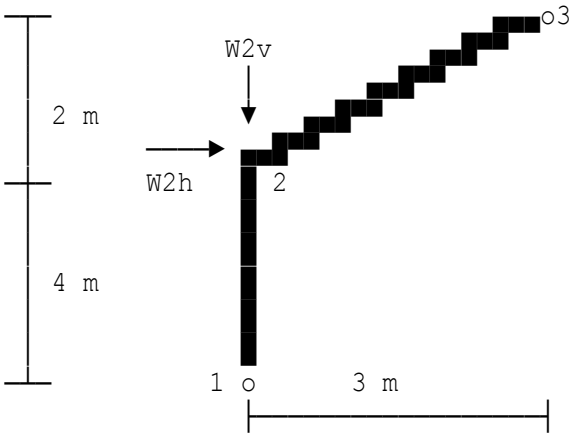

Vertical load at joint 2 W2v=1.7 kN
Horizontal load at joint 2 W2h=0.6 kN
For small displacements, the vertical load W2v causes compression in member 1-2 only; but the horizontal force W2h causes compression in members 1-2 and 2-3. Resolving horizontally at joint 2:
Horizontal react at 1 (+ve right) H1=0 kN
Horizontal react at 3 (+ve left) H3=W2h=0.6 kN
Axial force 2->3 (+ve compressn) F2=W2h/COS(alpha)=0.72111 kN
Shear force 2->3 S2=0 kN
Axial force 1->2 (+ve compressn) F1=F2*SIN(alpha)+W2v=2.1 kN
Shear force 1->2 S1=0 kN
Vertical reaction at 1 (+ve up) V1=2.1 kN
Vertical reaction at 3 (+ve up) V3=W2v-V1=-0.4 kN

Location: Lean-to type 2

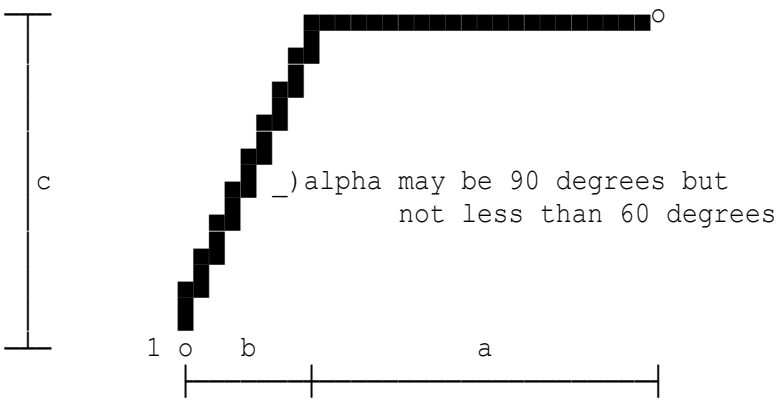

Length of non-sloping member a=1.8 m
Horiz projectn of sloping member b=0.6 m
Sloping membr project on vertical c=3.2 m
Moment of inertia of member 1-2 I12=8.38E-6 m⁴
Moment of inertia of member 2-3 I23=4.77E-6 m⁴
Notation 1->2 denotes: at joint 1 in the member joining joints 1 & 2
Loads and reactions are positive in the directions shown.

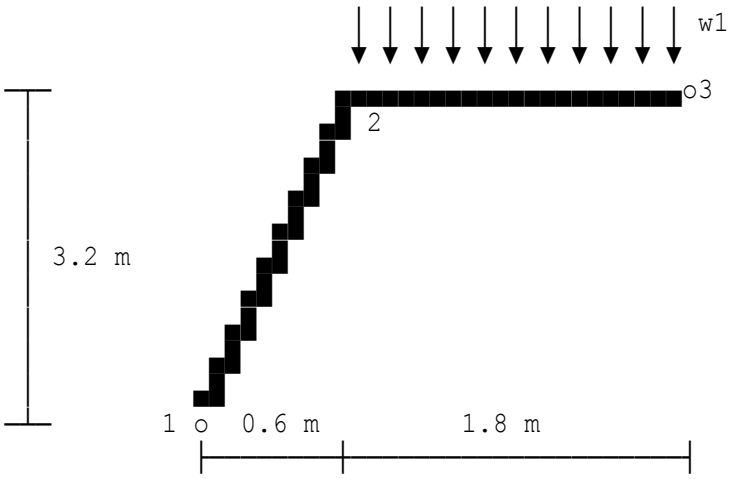

Vertical load per unit length w1=2 kN/m
Moment at 2 M=(w1*a^2/8)*(I12/r)/(I12/r+I23/a)
=0.3991 kNm
Vertical reaction at 3 (+ve up) V3=(w1*a^2/2-M)/a=1.5783 kN
Vertical reaction at 1 (+ve up) V1=w1*a-V3=2.0217 kN
Horizontal react at 1 (+ve right) H1=(V1*b+M)/c=0.50379 kN
Horizontal react at 3 (+ve left) H3=0.50379 kN
Axial force 1->2 (+ve compressn) F1=V1*SIN(alpha)+H1*COS(alpha)
=2.0799 kN
Shear force 1->2 S1=V1*COS(alpha)-H1*SIN(alpha)
=-0.12258 kN

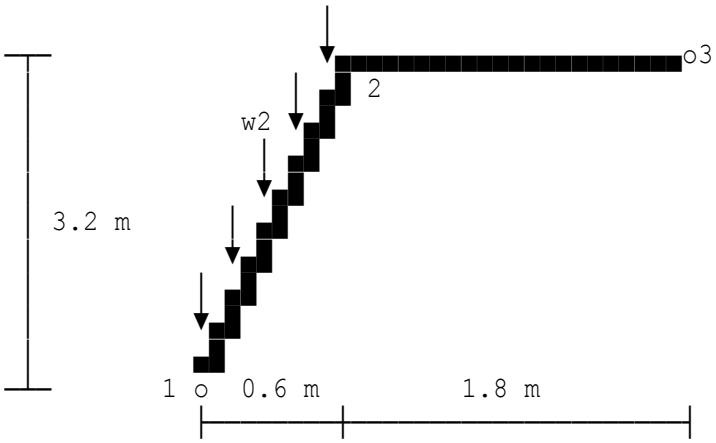

Vertical load per unit length	w2=0.8 kN/m
Moment at 2	M=(w*r^2/8)*(I23/a)/(I12/r+I23/a) =0.099096 kNm
Vertical reaction at 3 (+ve up)	V3=-M/a=-0.055053 kN
Vertical reaction at 1 (+ve up)	V1=w2*r-V3=2.6597 kN
Horizontal react at 1 (+ve right)	H1=(V1*b+M-w2*r*b/2)/c=0.28547 kN
Horizontal react at 3 (+ve left)	H3=0.28547 kN
Axial force 1->2 (+ve compressn)	F1=V1*SIN(alpha)+H1*COS(alpha) =2.6667 kN
Shear force 1->2	S1=V1*COS(alpha)-H1*SIN(alpha) =0.20956 kN

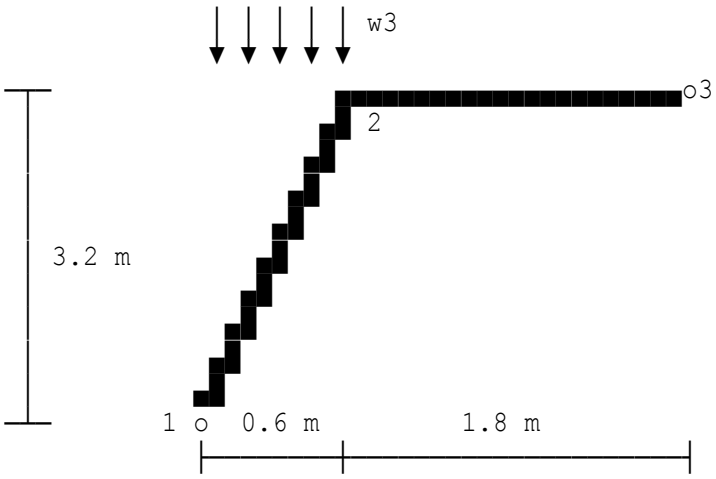

Plan load per unit length	w3=0.3 kN/m
Moment at 2	M=(w*r^2/8)*(I23/a)/(I12/r+I23/a) =0.0068483 kNm
Vertical reaction at 3 (+ve up)	V3=-M/a=-0.0038046 kN
Vertical reaction at 1 (+ve up)	V1=w3*b-V3=0.1838 kN
Horizontal react at 3 (+ve left)	H3=(w3*b^2/2-V3*(a+b))/c=0.019728 kN
Horizontal react at 1 (+ve right)	H1=0.019728 kN
Axial force 1->2 (+ve compressn)	F1=V1*SIN(alpha)+H1*COS(alpha) =0.18429 kN
Shear force 1->2	S1=V1*COS(alpha)-H1*SIN(alpha) =0.014483 kN

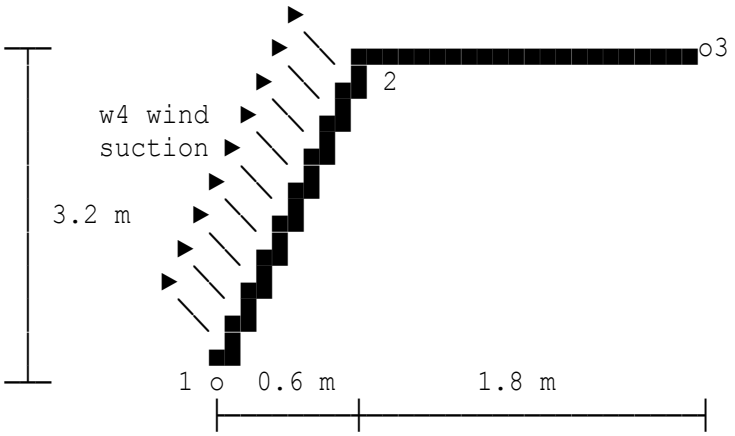

Suction on rafter (+ve) w4=0.75 kN/m
Moment at 2 M=(w*r^2/8)*(I23/a)/(I12/r+I23/a)
=-0.50411 kNm
Vertical reaction at 3 (+ve up) V3=-M/a=0.28006 kN
Vertical reaction at 1 (+ve up) V1=-w4*r*COS(alpha)-V3=-0.73006 kN
Horizontal react at 1 (+ve right) H1=(V1*b+M+w4*r^2/2)/c=0.94777 kN
Horizontal react at 3 (+ve left) H3=H1-w4*r*SIN(alpha)=-1.4522 kN
Axial force 1->2 (+ve compressn) F1=V1*SIN(alpha)+H1*COS(alpha)
=-0.5429 kN
Shear force 1->2 S1=V1*COS(alpha)-H1*SIN(alpha)
=-1.0661 kN

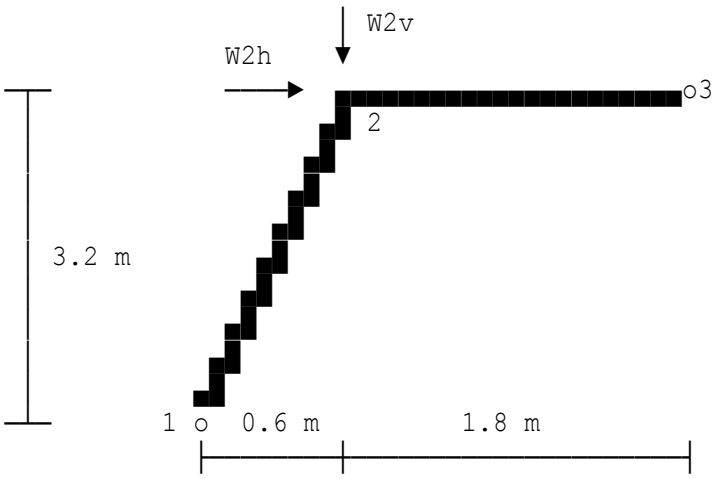

Vertical load at joint 2 W2v=1.7 kN
Horizontal load at joint 2 W2h=0.6 kN
For small displacements, the horizontal load W2h causes compression in member 2-3 only; but the vertical force W2v causes compression in members 1-2 and 2-3. Resolving vertically at joint 2:
Vertical reaction at 3 (+ve up) V3=0 kN
Vertical reaction at 1 (+ve up) V1=W2v=1.7 kN
Axial force 1->2 (+ve compressn) F1=W2v/SIN(alpha)=1.7296 kN
Shear force 1->2 S1=0 kN
Horizontal react at 1 (+ve right) H1=V1*b/c=0.31875 kN
Horizontal react at 3 (+ve left) H3=H1+W2h=0.91875 kN
Axial force 2->3 (+ve compressn) F2=H3=0.91875 kN
Shear force 2->3 S2=0 kN

Location: Influence lines for two span beam

The procedure sets up and reduces a stiffness matrix in which each beam element contributes the submatrices. The matrix is banded 4 elements wide. For each influence line, forces are applied to the appropriate element. The deflected form of the beam is the influence line by the Muller-Breslau principle. Areas in each span are computed by Simpson's rule.

Influence lines for shear are given for all points in the nominated span. The values for shear are those due to a unit load applied just to the right of the position to which the value is referenced. Therefore subtract the value from unity for shears when the unit load is applied just to the left of the reference position.

Number of spans s1=2

Spans in order left to right
(or span ratios):

L(1)=10 m
L(2)=10 m

Uniform inertia set in L(11) et seq.

Influence lines in order now follow:

Influence line for support number x(1)=1

Influence line for shear in span x(2)=2

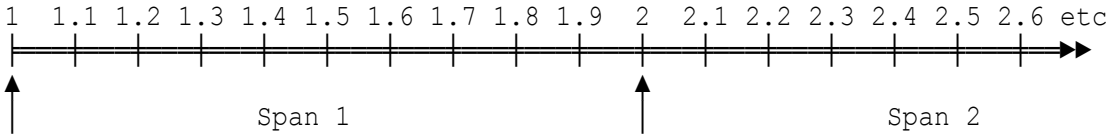

Influence line for mmt at point x(3)=2

ORDINATES OF INFLUENCE LINES — IN ORDER — LEFT TO RIGHT

Position			
1	1	0	0
1.1	0.87525	0.02475	0.2475
1.2	0.752	0.048	0.48
1.3	0.63175	0.06825	0.6825
1.4	0.516	0.084	0.84
1.5	0.40625	0.09375	0.9375
1.6	0.304	0.096	0.96
1.7	0.21075	0.08925	0.8925
1.8	0.128	0.072	0.72
1.9	0.05725	0.04275	0.4275

2	0	1	0
2.1	-0.04275	0.94275	0.4275
2.2	-0.072	0.872	0.72
2.3	-0.08925	0.78925	0.8925
2.4	-0.096	0.696	0.96
2.5	-0.09375	0.59375	0.9375
2.6	-0.084	0.484	0.84
2.7	-0.06825	0.36825	0.6825
2.8	-0.048	0.248	0.48
2.9	-0.02475	0.12475	0.2475
3	0	0	0

Location: Influence lines for eight span beam

The procedure sets up and reduces a stiffness matrix in which each beam element contributes the submatrices. The matrix is banded 4 elements wide. For each influence line, forces are applied to the appropriate element. The deflected form of the beam is the influence line by the Muller-Breslau principle. Areas in each span are computed by Simpson's rule.

Influence lines for shear are given for all points in the nominated span. The values for shear are those due to a unit load applied just to the right of the position to which the value is referenced. Therefore subtract the value from unity for shears when the unit load is applied just to the left of the reference position.

Number of spans s1=8

Spans in order left to right
(or span ratios):

L(1)=10 m
L(2)=8 m
L(3)=10 m
L(4)=8 m
L(5)=7 m
L(6)=6 m
L(7)=7 m
L(8)=8 m

Inertias in order left to right
(or inertia ratios) stored in
L(11),L(12)...

L(11)=1 m^4
L(12)=1.2 m^4
L(13)=1 m^4
L(14)=1.2 m^4
L(15)=1 m^4
L(16)=2 m^4
L(17)=2.1 m^4
L(18)=2.2 m^4

Influence lines in order now follow:

Influence line for support number x(1)=5

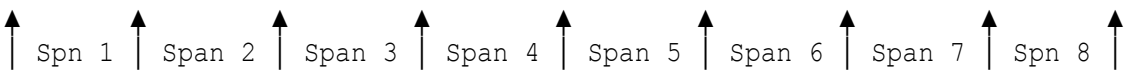

Influence line for shear in span x(2)=7

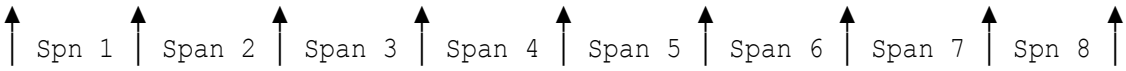

Influence line for shear in span x(3)=8

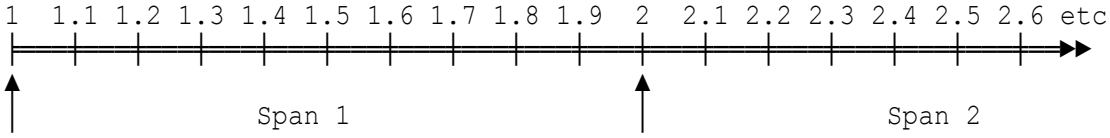

Influence line for mmt at point x(4)=8.5

ORDINATES OF INFLUENCE LINES — IN ORDER — LEFT TO RIGHT

Position				
1	0	0	0	0
1.1	-0.004595	-95.326E-6	16.097E-6	64.387E-6
1.2	-0.0089116	-0.18487E-3	31.218E-6	0.12487E-3
1.3	-0.012671	-0.26287E-3	44.388E-6	0.17755E-3
1.4	-0.015595	-0.32353E-3	54.631E-6	0.21852E-3
1.5	-0.017405	-0.36108E-3	60.972E-6	0.24389E-3
1.6	-0.017823	-0.36975E-3	62.436E-6	0.24974E-3
1.7	-0.01657	-0.34375E-3	58.046E-6	0.23218E-3
1.8	-0.013367	-0.27731E-3	46.827E-6	0.18731E-3
1.9	-0.0079369	-0.16465E-3	27.803E-6	0.11121E-3
2	0	0	0	0
2.1	0.0080204	0.16639E-3	-28.096E-6	-0.11238E-3
2.2	0.016635	0.3451E-3	-58.273E-6	-0.23309E-3
2.3	0.024952	0.51765E-3	-87.41E-6	-0.34964E-3
2.4	0.032082	0.66555E-3	-0.11238E-3	-0.44954E-3
2.5	0.037132	0.77031E-3	-0.13007E-3	-0.5203E-3
2.6	0.039211	0.81345E-3	-0.13736E-3	-0.54943E-3
2.7	0.037429	0.77647E-3	-0.13111E-3	-0.52446E-3
2.8	0.030894	0.6409E-3	-0.10822E-3	-0.43289E-3
2.9	0.018714	0.38824E-3	-65.557E-6	-0.26223E-3
3	0	0	0	0
3.1	-0.033836	-0.70194E-3	0.11853E-3	0.47412E-3
3.2	-0.075749	-0.0015714	0.26535E-3	0.0010614
3.3	-0.11989	-0.0024871	0.41998E-3	0.0016799
3.4	-0.16041	-0.0033277	0.56192E-3	0.0022477
3.5	-0.19146	-0.0039719	0.6707E-3	0.0026828
3.6	-0.20719	-0.0042983	0.72581E-3	0.0029033
3.7	-0.20176	-0.0041857	0.70679E-3	0.0028272
3.8	-0.16932	-0.0035126	0.59314E-3	0.0023726
3.9	-0.10401	-0.0021578	0.36437E-3	0.0014575
4	0	0	0	0
4.1	0.11095	0.0022809	-0.38515E-3	-0.0015406
4.2	0.23851	0.0047821	-0.8075E-3	-0.00323
4.3	0.37555	0.0072309	-0.001221	-0.004884
4.4	0.51493	0.0093546	-0.0015796	-0.0063185
4.5	0.64948	0.010881	-0.0018373	-0.0073492
4.6	0.77208	0.011536	-0.001948	-0.007792
4.7	0.87558	0.011049	-0.0018657	-0.0074626
4.8	0.95283	0.0091451	-0.0015442	-0.006177
4.9	0.99668	0.0055532	-0.93771E-3	-0.0037508
5	1	0	0	0
5.1	0.96254	-0.0066622	0.001125	0.0044999
5.2	0.88943	-0.014413	0.0024338	0.0097353
5.3	0.78883	-0.02229	0.0037638	0.015055

5.4	0.66889	-0.029328	0.0049523	0.019809
5.5	0.53777	-0.034565	0.0058366	0.023346
5.6	0.40363	-0.037036	0.0062539	0.025016
5.7	0.27463	-0.035779	0.0060416	0.024166
5.8	0.15892	-0.029829	0.005037	0.020148
5.9	0.064654	-0.018224	0.0030774	0.012309
6	0	0	0	0
6.1	-0.033752	0.019799	-0.0033433	-0.013373
6.2	-0.055369	0.040424	-0.006826	-0.027304
6.3	-0.066589	0.059915	-0.010117	-0.040469
6.4	-0.06915	0.076313	-0.012886	-0.051545
6.5	-0.06479	0.087658	-0.014802	-0.059208
6.6	-0.055247	0.09199	-0.015533	-0.062134
6.7	-0.042258	0.08735	-0.01475	-0.059
6.8	-0.027562	0.071778	-0.01212	-0.048482
6.9	-0.012897	0.043315	-0.0073141	-0.029256
7	0	1	0	0
7.1	0.01116	0.92983	0.011679	0.046717
7.2	0.018339	0.84201	0.025327	0.10131
7.3	0.022098	0.74067	0.039232	0.15693
7.4	0.023002	0.62994	0.051682	0.20673
7.5	0.021614	0.51396	0.060966	0.24386
7.6	0.018497	0.39686	0.065373	0.26149
7.7	0.014214	0.28278	0.063191	0.25276
7.8	0.0093275	0.17585	0.052709	0.21084
7.9	0.0044019	0.080214	0.032216	0.12886
8	0	0	1	0
8.1	-0.003862	-0.069498	0.94774	-0.20906
8.2	-0.0065044	-0.11705	0.8804	-0.47841
8.3	-0.0080627	-0.14509	0.79966	-0.80137
8.4	-0.0086725	-0.15606	0.7072	-1.1712
8.5	-0.0084692	-0.15241	0.60468	-1.5813
8.6	-0.0075884	-0.13656	0.4938	-1.2248
8.7	-0.0061656	-0.11095	0.37621	-0.89516
8.8	-0.0043363	-0.078032	0.2536	-0.58561
8.9	-0.0022359	-0.040235	0.12764	-0.28946
9	0	0	0	0

Location: Slab with fixed edges supporting central concentrated load

Slab moments due to concentrated loads using Pigeaud's coefficients

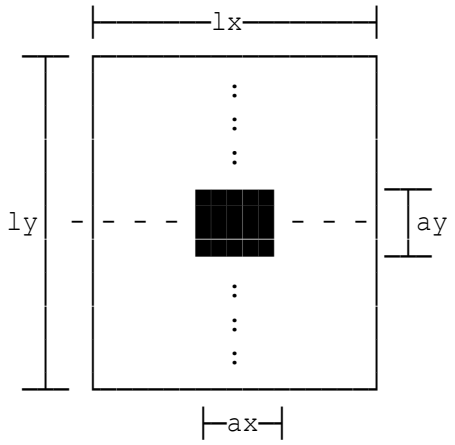

Concrete slab with concentrated load symmetrical about both axes

Total load = F kN

All dimensions in metres

Poisson's ratio	nu=0.2
Shorter span	lx=3 m
Longer span	ly=3.75 m

Load details

Load length in lx direction	ax=0.525 m
Load length in ly direction	ay=1.05 m
Individual concentrated load	F=200 kN

Continuity conditions

Two-way slab with all edges continuous.

Calculation of bending moments

Bending moment in x-direction	Mx=F*LFactor*(alfx1+nu*alfy1)
	=41.094 kNm/m
Bending moment in y-direction	My=F*LFactor*(nu*alfx1+alfy1)
	=31.47 kNm/m

Taking account of suggested allowances for continuity in x-direction:

Bending moment at end support	Mx1=-0.25*Mx=-10.274 kNm/m
Maximum moment in end span	Mx2=0.85*Mx=34.93 kNm/m
Moment at penultimate support	Mx3=-0.85*Mx=-34.93 kNm/m
Maximum moment in interior span	Mx4=0.70*Mx=28.766 kNm/m
Moment at interior supports	Mx5=-0.90*Mx=-36.985 kNm/m

Taking account of suggested allowances for continuity in y-direction:

Bending moment at end support	My1=-0.25*My=-7.8675 kNm/m
Maximum moment in end span	My2=0.85*My=26.75 kNm/m
Moment at penultimate support	My3=-0.85*My=-26.75 kNm/m
Maximum moment in interior span	My4=0.70*My=22.029 kNm/m
Moment at interior supports	My5=-0.90*My=-28.323 kNm/m

Effective width in direction of shorter span lx

Effective width of slab lyEff=ay+2*lx2=2.85 m

Effective width in direction of longer span ly

Effective width of slab lxEff=ax+2*ly2=2.775 m

Approximate shearing forces from each load F

Shear force at centre of ax Vax=F/(3*ay)=63.492 kN/m
Shear force at centre of ay Vay=F/(2*ay+ax)=76.19 kN/m

Location: Square fixed-edge slab supporting twin loads

Slab moments due to concentrated loads using Pigeaud's coefficients

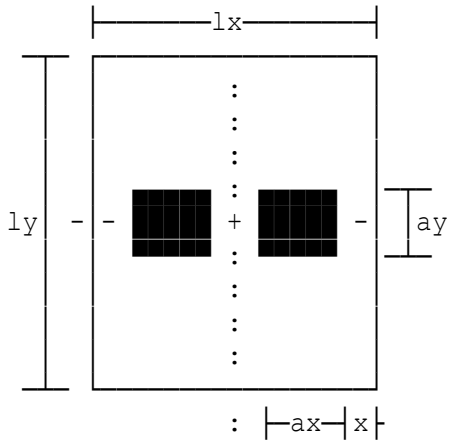

Concrete slab with concentrated loads symmetrical about both axes

Each individual total load = F kN

All dimensions in metres

Poisson's ratio	nu=0.2
Shorter span	lx=5 m
Longer span	ly=5 m

Load details

Load length in lx direction	ax=2.5 m
Start of load from nearer support	x=0 m
Load length in ly direction	ay=1.05 m
Individual concentrated load	F=450 kN

Continuity conditions

Two-way slab with all edges continuous.

Calculation of bending moments

Bending moment in x-direction	Mx=F*LFactor*(alfx1+nu*alfy1) =67.302 kNm/m
Bending moment in y-direction	My=F*LFactor*(nu*alfx1+alfy1) =86.814 kNm/m

Taking account of suggested allowances for continuity in x-direction:

Bending moment at end support	Mx1=-0.25*Mx=-16.826 kNm/m
Maximum moment in end span	Mx2=0.85*Mx=57.207 kNm/m
Moment at penultimate support	Mx3=-0.85*Mx=-57.207 kNm/m
Maximum moment in interior span	Mx4=0.70*Mx=47.111 kNm/m
Moment at interior supports	Mx5=-0.90*Mx=-60.572 kNm/m

Taking account of suggested allowances for continuity in y-direction:

Bending moment at end support	My1=-0.25*My=-21.704 kNm/m
Maximum moment in end span	My2=0.85*My=73.792 kNm/m
Moment at penultimate support	My3=-0.85*My=-73.792 kNm/m
Maximum moment in interior span	My4=0.70*My=60.77 kNm/m
Moment at interior supports	My5=-0.90*My=-78.133 kNm/m

Effective width in direction of shorter span lx

Effective width of slab lyEff=ay+2*lx2=3.3 m

Effective width in direction of longer span ly

Effective width is equal to total slab width lx.
Effective width of slab 5 m

Approximate shearing forces from each load F

Shear force at centre of ax Vax=F/(2*ax+ay)=74.38 kN/m
Shear force at centre of ay Vay=F/(3*ax)=60 kN/m

Location: Slab w. two adjacent edges continuous & unsymmetrical load

Slab moments due to concentrated loads using Pigeaud's coefficients

Concentrated load is unsymmetrical about both axes

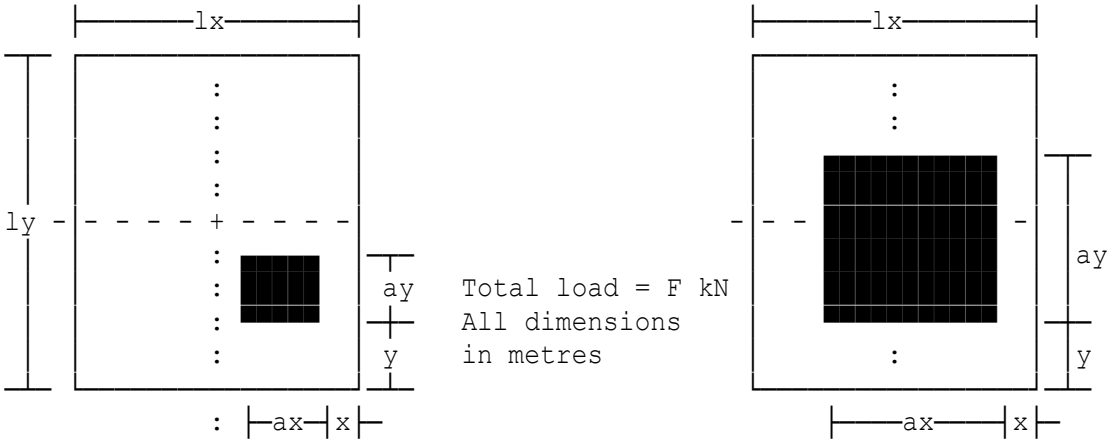

Poisson's ratio	nu=0.2
Shorter span	lx=4 m
Longer span	ly=7 m

Load details

Load length in lx direction	ax=2 m
Start of load from nearer support	x=0 m
Load length in ly direction	ay=3.5 m
Start of load from nearer support	y=0 m
Individual concentrated load	F=500 kN

Continuity conditions

Two-way slab with two adjacent edges continuous.

WARNING:
Specified combination of slab dimensions and fixity conditions falls outside validity of Pigeaud's tables.

Location: To give table failure

Slab moments due to concentrated loads using Pigeaud's coefficients

Concentrated load is unsymmetrical about both axes

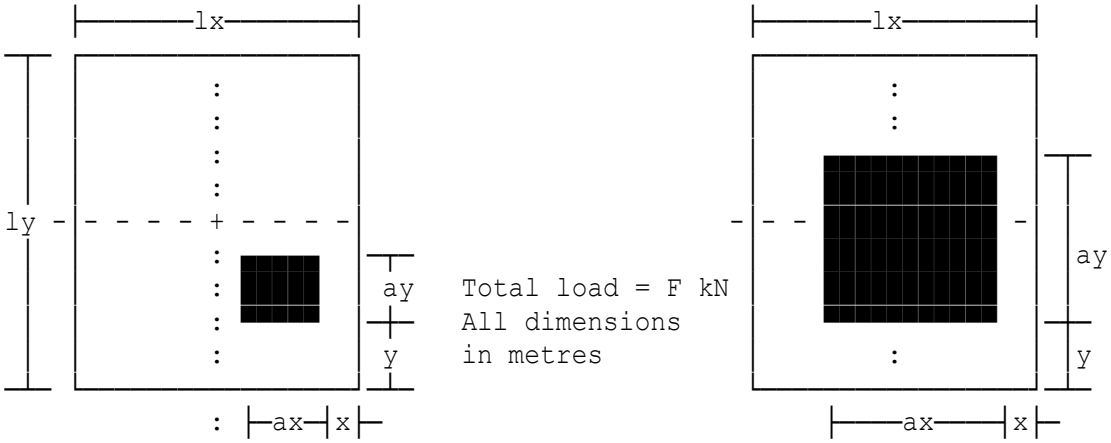

Poisson's ratio	nu=0.2
Shorter span	lx=1 m
Longer span	ly=20 m

Load details

Load length in lx direction	ax=0.5 m
Start of load from nearer support	x=0 m
Load length in ly direction	ay=10 m
Start of load from nearer support	y=0 m
Individual concentrated load	F=0 kN

Continuity conditions

Two-way slab with two adjacent edges continuous.

WARNING:
Specified combination of slab dimensions and fixity conditions falls outside validity of Pigeaud's tables.

Location: Slab with fixed edges supporting central concentrated load

Slab moments due to concentrated loads using Pigeaud's coefficients

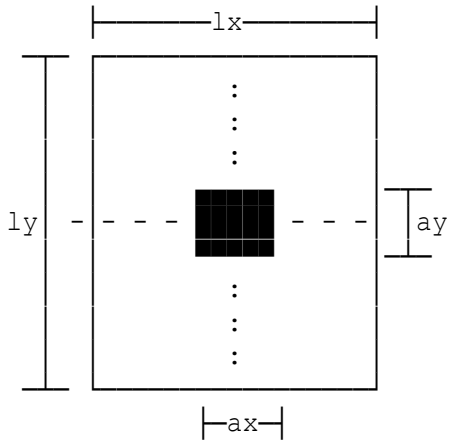

Concrete slab with concentrated load symmetrical about both axes

Total load = F kN

All dimensions in metres

Poisson's ratio	nu=0.2
Shorter span	lx=3 m
Longer span	ly=3.75 m

Load details

Load length in lx direction	ax=0.525 m
Load length in ly direction	ay=1.05 m
Individual concentrated load	F=200 kN

Continuity conditions

Two-way slab with all edges continuous.

Calculation of bending moments

Bending moment in x-direction	Mx=F*LFactor*(alfx1+nu*alfy1)
	=41.094 kNm/m
Bending moment in y-direction	My=F*LFactor*(nu*alfx1+alfy1)
	=31.47 kNm/m

Taking account of suggested allowances for continuity in x-direction:

Bending moment at end support	Mx1=-0.25*Mx=-10.274 kNm/m
Maximum moment in end span	Mx2=0.85*Mx=34.93 kNm/m
Moment at penultimate support	Mx3=-0.85*Mx=-34.93 kNm/m
Maximum moment in interior span	Mx4=0.70*Mx=28.766 kNm/m
Moment at interior supports	Mx5=-0.90*Mx=-36.985 kNm/m

Taking account of suggested allowances for continuity in y-direction:

Bending moment at end support	My1=-0.25*My=-7.8675 kNm/m
Maximum moment in end span	My2=0.85*My=26.75 kNm/m
Moment at penultimate support	My3=-0.85*My=-26.75 kNm/m
Maximum moment in interior span	My4=0.70*My=22.029 kNm/m
Moment at interior supports	My5=-0.90*My=-28.323 kNm/m

Copyright 1986-2024 Fitzroy Systems Ltd.

Effective width in direction of shorter span lx

Effective width of slab lyEff=ay+2*lx2=2.85 m

Effective width in direction of longer span ly

Effective width of slab lxEff=ax+2*ly2=2.775 m

Approximate shearing forces from each load F

Shear force at centre of ax Vax=F/(3*ay)=63.492 kN/m
Shear force at centre of ay Vay=F/(2*ay+ax)=76.19 kN/m

Location: Square fixed-edge slab supporting twin loads

Slab moments due to concentrated loads using Pigeaud's coefficients

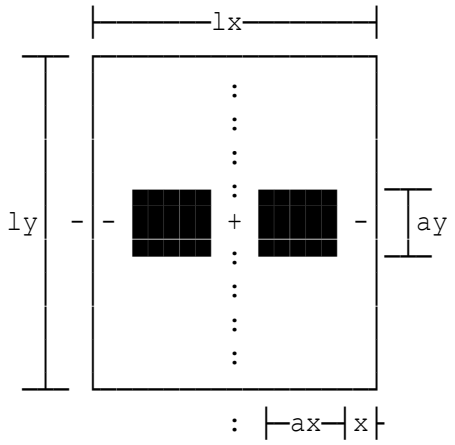

Concrete slab with concentrated

loads symmetrical about both axes

Each individual total load = F kN

All dimensions in metres

Poisson's ratio	nu=0.2
Shorter span	lx=5 m
Longer span	ly=5 m

Load details

Load length in lx direction	ax=2.5 m
Start of load from nearer support	x=0 m
Load length in ly direction	ay=1.05 m
Individual concentrated load	F=450 kN

Continuity conditions

Two-way slab with all edges continuous.

Calculation of bending moments

Bending moment in x-direction	Mx=F*LFactor*(alfx1+nu*alfy1) =67.302 kNm/m
Bending moment in y-direction	My=F*LFactor*(nu*alfx1+alfy1) =86.814 kNm/m

Taking account of suggested allowances for continuity in x-direction:

Bending moment at end support	Mx1=-0.25*Mx=-16.826 kNm/m
Maximum moment in end span	Mx2=0.85*Mx=57.207 kNm/m
Moment at penultimate support	Mx3=-0.85*Mx=-57.207 kNm/m
Maximum moment in interior span	Mx4=0.70*Mx=47.111 kNm/m
Moment at interior supports	Mx5=-0.90*Mx=-60.572 kNm/m

Taking account of suggested allowances for continuity in y-direction:

Bending moment at end support	My1=-0.25*My=-21.704 kNm/m
Maximum moment in end span	My2=0.85*My=73.792 kNm/m
Moment at penultimate support	My3=-0.85*My=-73.792 kNm/m
Maximum moment in interior span	My4=0.70*My=60.77 kNm/m
Moment at interior supports	My5=-0.90*My=-78.133 kNm/m

Effective width in direction of shorter span lx

Effective width of slab lyEff=ay+2*lx2=3.3 m

Effective width in direction of longer span ly

Effective width is equal to total slab width lx.
Effective width of slab 5 m

Approximate shearing forces from each load F

Shear force at centre of ax Vax=F/(2*ax+ay)=74.38 kN/m
Shear force at centre of ay Vay=F/(3*ax)=60 kN/m

Location: Slab w. two adjacent edges continuous & unsymmetrical load

Slab moments due to concentrated loads using Pigeaud's coefficients

Concentrated load is unsymmetrical about both axes

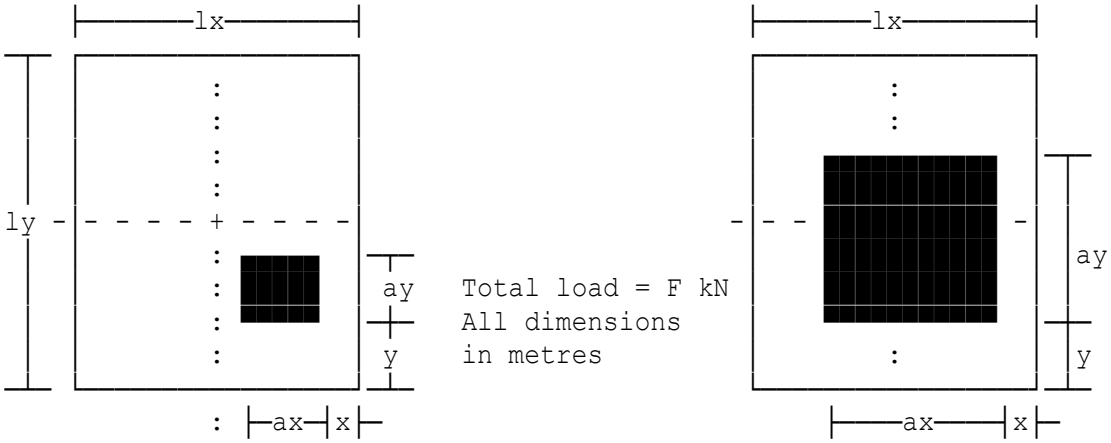

Poisson's ratio	nu=0.2
Shorter span	lx=4 m
Longer span	ly=7 m

Load details

Load length in lx direction	ax=2 m
Start of load from nearer support	x=0 m
Load length in ly direction	ay=3.5 m
Start of load from nearer support	y=0 m
Individual concentrated load	F=500 kN

Continuity conditions

Two-way slab with two adjacent edges continuous.

WARNING:
Specified combination of slab dimensions and fixity conditions falls outside validity of Pigeaud's tables.

Location: To give table failure

Slab moments due to concentrated loads using Pigeaud's coefficients

Concentrated load is unsymmetrical about both axes

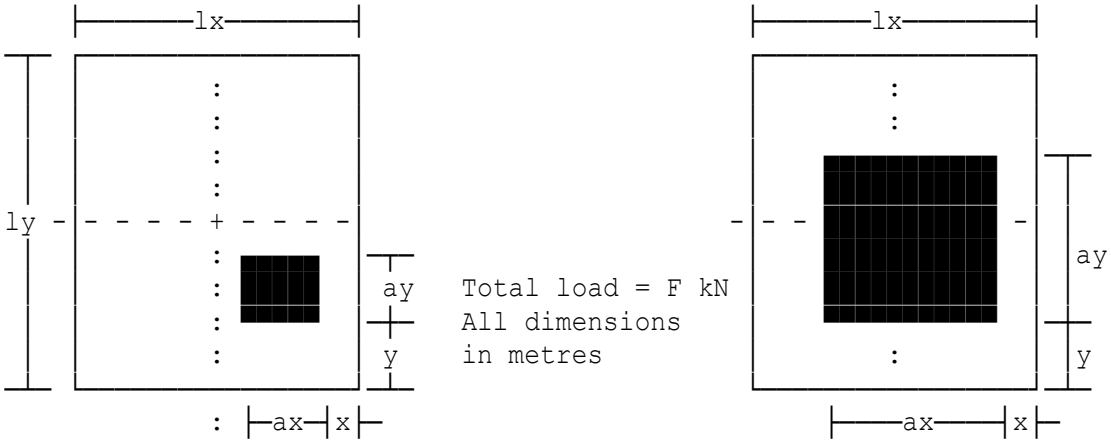

Poisson's ratio	nu=0.2
Shorter span	lx=1 m
Longer span	ly=20 m

Load details

Load length in lx direction	ax=0.5 m
Start of load from nearer support	x=0 m
Load length in ly direction	ay=10 m
Start of load from nearer support	y=0 m
Individual concentrated load	F=0 kN

Continuity conditions

Two-way slab with two adjacent edges continuous.

WARNING:
Specified combination of slab dimensions and fixity conditions falls outside validity of Pigeaud's tables.

Location: Demonstration of input of all loading types

Design moments and shears in box culverts

The formulae employed and their basis are as given in Table 186 of the 10th Edition of the Reinforced Concrete Designer's Handbook.

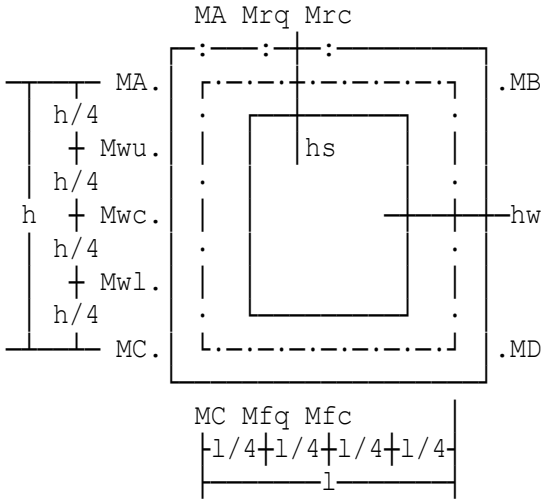

Bending moment and shearing force diagrams are symmetrical about vertical centre-line of section (i.e. MB=MA, MD=MC, etc).

Values of moment and shear are given at quarter-points along walls, floor and roof of culvert, as shown.
h and l are measured between centres of walls and slabs.
Moments and shear in culvert floor are only approximate.

Overall height of culvert	ho=2.5 m
Overall width of culvert	lo=3.5 m
Floor and roof thickness	hs=500 mm
Wall thickness	hw=400 mm
Degree of compressibility of soil	comp=0.5

Central concentrated (or line) load on culvert roof

Concentrated load	F(1)=500 kN/m
With non-compressible soil:	
Moment at corner A	MAn=-F*l/(4*K2)=-118.86 kNm/m
Moment at corner C	MCn=-MAn/2=59.431 kNm/m
With highly-compressible soil:	
Moment at corner A	MAc=-F*l*K4/(24*K1*K3)=-94.179 kNm/m
Moment at corner C	MCc=MAc*K6/K4=-48.699 kNm/m
For soil condition considered:	
Moment at corner A	MA=MAc*comp+MAn*(1-comp)=-106.52 kNm/m
Moment at corner C	MC=MCc*comp+MCn*(1-comp)=5.366 kNm/m

Bending moments at intermediate points:

In roof:	at midspan	Mrm=F*l/4+MA=280.98 kNm/m
	at 1/4-point	Mrq=(MA+Mrm)/2=87.229 kNm/m
In wall:	at 0.75h above base	Mwu=(3*MA+MC)/4=-78.549 kNm/m
	at 0.50h	Mwm=(MA+MC)/2=-50.577 kNm/m
	at 0.25h	Mwl=(MA+3*MC)/4=-22.606 kNm/m
In floor:	at midspan	Mfm=(F*l/8+MCc)*comp=72.525 kNm/m
	at 1/4-point	Mfq=(3*F*l/32+MCc)*comp=48.307 kNm/m

Moments and shears due to action of current load

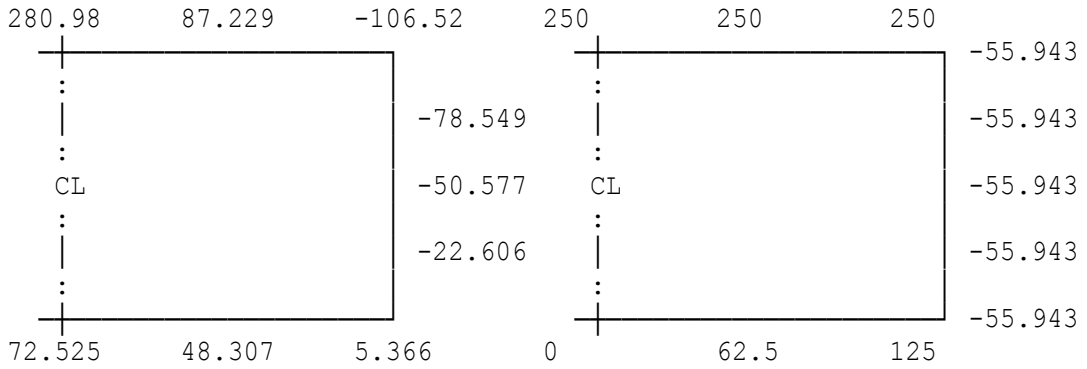

BENDING MOMENTS (in kNm per metre run)

SHEARING FORCES (in kN per metre run)

Moments and shears are symmetrical about vertical centreline through section.

Uniform load on culvert roof

Uniform load	q(2)=20 kN/m²
With non-compressible soil:	
Moment at corner A	MAn=-q*l^2/(6*K2)=-9.8259 kNm/m
Moment at corner C	MCn=-MAn/2=4.913 kNm/m
With highly-compressible soil:	
Moment at corner A	MAc=-q*l^2/(12*K1)=-7.0868 kNm/m
Moment at corner C	MCc=MAc=-7.0868 kNm/m
For soil condition considered:	
Moment at corner A	MA=MAc*comp+MAn*(1-comp)=-8.4564 kNm/m
Moment at corner C	MC=MCc*comp+MCn*(1-comp)=-1.0869 kNm/m

Bending moments at intermediate points:

In roof:	at midspan	Mrm=q*l^2/8+MA=15.569 kNm/m
	at 1/4-point	Mrq=3*q*l^2/32+MA=9.5624 kNm/m
In wall:	at 0.75h above base	Mwu=(3*MA+MC)/4=-6.614 kNm/m
	at 0.50h	Mwm=(MA+MC)/2=-4.7716 kNm/m
	at 0.25h	Mwl=(MA+3*MC)/4=-2.9293 kNm/m
In floor:	at midspan	Mfm=(q*l^2/8+MCc)*comp=8.4691 kNm/m
	at 1/4-point	Mfq=(3*q*l^2/32+MCc)*comp=5.466 kNm/m

Moments and shears due to action of current load

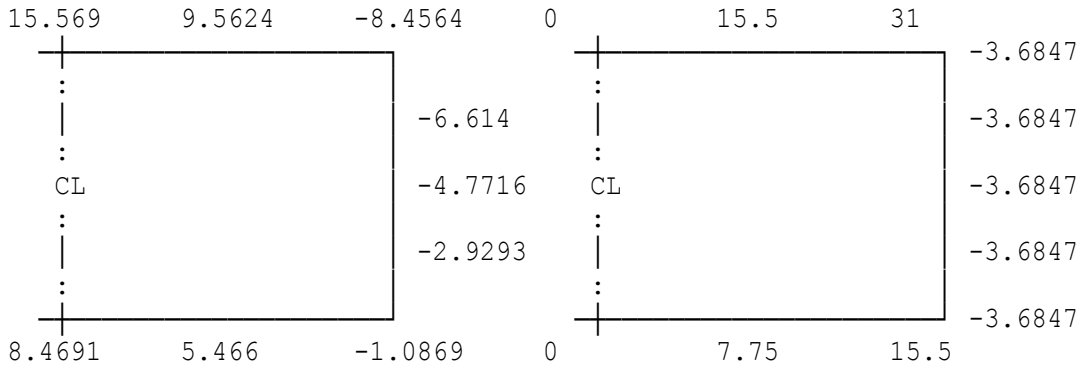

BENDING MOMENTS (in kNm per metre run)

SHEARING FORCES (in kN per metre run)

Moments and shears are symmetrical about vertical centreline through section.

Self-weight of culvert walls

Unit weight of concrete Dc(3)=24 kN/m³

Moments and shears due to action of current load

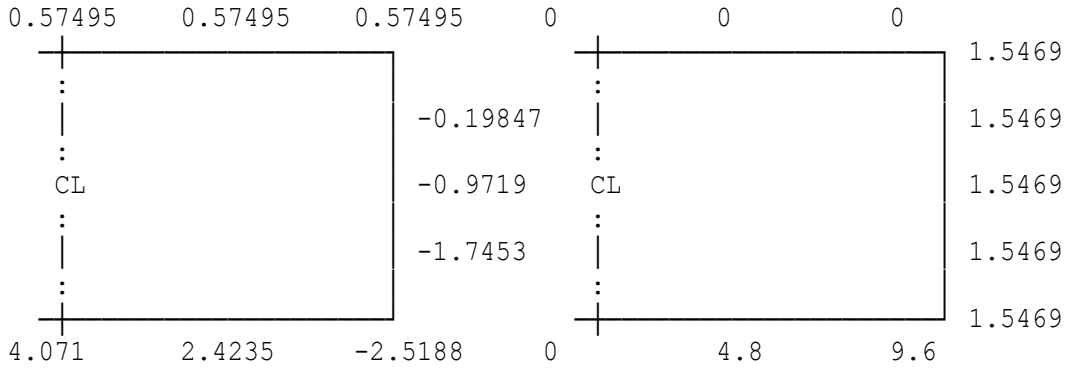

BENDING MOMENTS (in kNm per metre run)

SHEARING FORCES (in kN per metre run)

Moments and shears are symmetrical about vertical centreline through section.

Lateral earth pressure on culvert walls

Earth pressure at bottom of wall qep(4)=20 kN/m²
Let qep=qep(cycle)=20
With non-compressible soil:
Moment at corner A MAn=-qep*h^2*k/(30*K2)=-1.0307 kNm/m
Moment at corner C MCn=MAn*K8/(2*k)=-4.818 kNm/m
With highly-compressible soil:
Moment at corner A MAc=-qep*h^2*k*K7/(60*K1*K3)
=-1.6613 kNm/m
Moment at corner C MCc=MAc*K8/K7=-2.0557 kNm/m
For soil condition considered:
Moment at corner A MA=MAc*comp+MAn*(1-comp)=-1.346 kNm/m

```
  Moment at corner C              MC=MCc*comp+MCn*(1-comp)=-3.4368 kNm/m

Bending moments at intermediate points:
  In roof:  at midspan            Mrm=MA=-1.346 kNm/m
            at 1/4-point          Mrq=MA=-1.346 kNm/m
  In wall:  at 0.75h above base   Mwu=qep*h^2*5/128+(3*MA+MC)/4
                                     =1.2563 kNm/m
            at 0.50h              Mwm=qep*h^2/16+(MA+MC)/2=2.6086 kNm/m
            at 0.25h              Mwl=qep*h^2*7/128+(MA+3*MC)/4
                                     =1.4609 kNm/m
  In floor: at midspan            Mfm=MCc*comp=-1.0278 kNm/m
            at 1/4-point          Mfq=MCc*comp=-1.0278 kNm/m
```

Moments and shears due to action of current load

```
-1.346     -1.346     -1.346      0          0          0
  ┼──────────────────────┐            ┼──────────────────────┐ -5.6213
  :                      │            :                      │
  │                      │ 1.2563     │                      │ -4.3713
  :                      │            :                      │
  CL                     │ 2.6086     CL                     │ -0.62126
  :                      │            :                      │
  │                      │ 1.4609     │                      │ 5.6287
  :                      │            :                      │
  ┼──────────────────────┘            ┼──────────────────────┘ 14.379
-1.0278    -1.0278    -3.4368     0          0          0
```

BENDING MOMENTS (in kNm per metre run) — SHEARING FORCES (in kN per metre run)

Moments and shears are symmetrical about vertical centreline through section.

Uniform earth pressure on walls due to surcharge, etc

```
Uniform earth pressure            qel(5)=20 kN/m²
Let                               qel=qel(cycle)=20
With non-compressible soil:
  Moment at corner A              MAn=-qel*h^2*k/(12*K2)=-2.5768 kNm/m
  Moment at corner C              MCn=MAn*K3/k=-8.7116 kNm/m
With highly-compressible soil:
  Moment at corner A              MAc=-qel*h^2*k/(12*K1)=-3.7169 kNm/m
  Moment at corner C              MCc=MAc=-3.7169 kNm/m
For soil condition considered:
  Moment at corner A              MA=MAc*comp+MAn*(1-comp)=-3.1469 kNm/m
  Moment at corner C              MC=MCc*comp+MCn*(1-comp)=-6.2143 kNm/m

Bending moments at intermediate points:
  In roof:  at midspan            Mrm=MA=-3.1469 kNm/m
            at 1/4-point          Mrq=MA=-3.1469 kNm/m
  In wall:  at 0.75h above base   Mwu=qel*h^2*3/32+(3*MA+MC)/4
                                     =3.5863 kNm/m
            at 0.50h              Mwm=qel*h^2/8+(MA+MC)/2=5.3194 kNm/m
            at 0.25h              Mwl=qel*h^2*3/32+(MA+3*MC)/4
                                     =2.0526 kNm/m
```

```
  In floor: at midspan            Mfm=MCc*comp=-1.8585 kNm/m
            at 1/4-point          Mfq=MCc*comp=-1.8585 kNm/m
```

Moments and shears due to action of current load

```
-3.1469    -3.1469    -3.1469     0          0          0
  ┼──────────────────────┐          ┼──────────────────────┐  -18.466
  :                      │          :                      │
  │                      │  3.5863  │                      │  -8.4663
  :                      │          :                      │
  CL                     │  5.3194  CL                     │  1.5337
  :                      │          :                      │
  │                      │  2.0526  │                      │  11.534
  :                      │          :                      │
  ┼──────────────────────┘          ┼──────────────────────┘  21.534
-1.8585    -1.8585    -6.2143     0          0          0

      BENDING MOMENTS                    SHEARING FORCES
   (in kNm per metre run)             (in kN per metre run)
       Moments and shears are symmetrical about vertical
                  centreline through section.
```

Internal hydrostatic pressure on walls and floor

```
Internal pressure at base of wall qip(6)=20 kN/m²
Let                               qip=qip(cycle)=20
With non-compressible soil:
  Moment at corner A              MAn=qip*h^2*k/(30*K2)=1.0307 kNm/m
  Moment at corner C              MCn=MAn*K8/(2*k)=4.818 kNm/m
With highly-compressible soil:
  Moment at corner A              MAc=qip*h^2*k*K7/(60*K1*K3)
                                     =1.6613 kNm/m
  Moment at corner C              MCc=MAc*K8/K7=2.0557 kNm/m
For soil condition considered:
  Moment at corner A              MA=MAc*comp+MAn*(1-comp)=1.346 kNm/m
  Moment at corner C              MC=MCc*comp+MCn*(1-comp)=3.4368 kNm/m

Bending moments at intermediate points:
  In roof:  at midspan            Mrm=MA=1.346 kNm/m
            at 1/4-point          Mrq=MA=1.346 kNm/m
  In wall:  at 0.75h above base   Mwu=-qip*h^2*5/128+(3*MA+MC)/4
                                     =-1.2563 kNm/m
            at 0.50h              Mwm=-qip*h^2/16+(MA+MC)/2
                                     =-2.6086 kNm/m
            at 0.25h              Mwl=-qip*h^2*7/128+(MA+3*MC)/4
                                     =-1.4609 kNm/m
  In floor: at midspan            Mfm=MCc*comp=1.0278 kNm/m
            at 1/4-point          Mfq=MCc*comp=1.0278 kNm/m
```

Moments and shears due to action of current load

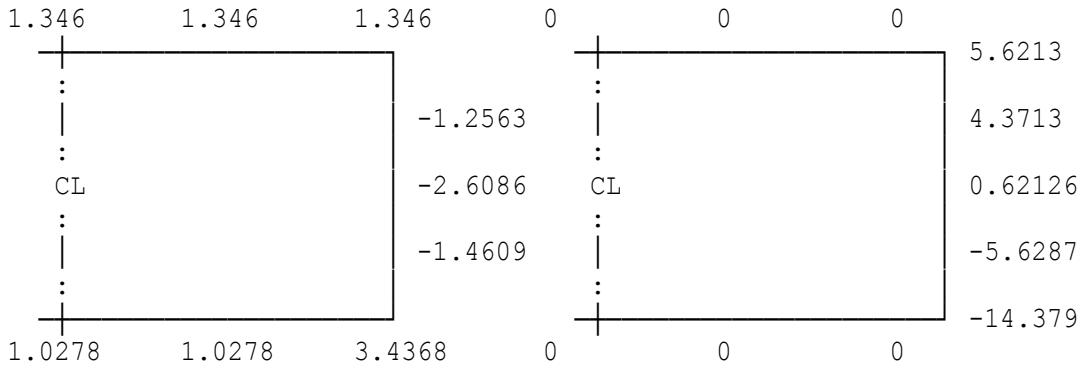

BENDING MOMENTS (in kNm per metre run)

SHEARING FORCES (in kN per metre run)

Moments and shears are symmetrical about vertical centreline through section.

Moments and shears due to action of all loads considered

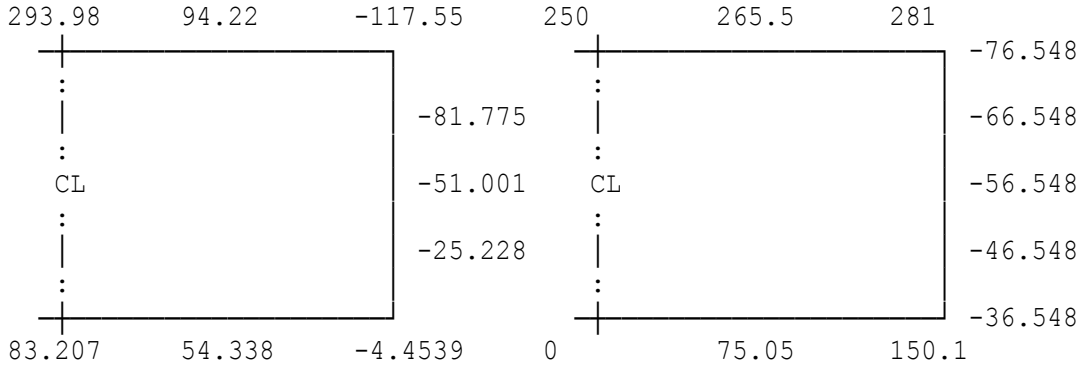

BENDING MOMENTS (in kNm per metre run)

SHEARING FORCES (in kN per metre run)

Moments and shears are symmetrical about vertical centreline through section.

Location: Deep narrow culvert with earth pressure on walls

Design moments and shears in box culverts

The formulae employed and their basis are as given in Table 186 of the 10th Edition of the Reinforced Concrete Designer's Handbook.

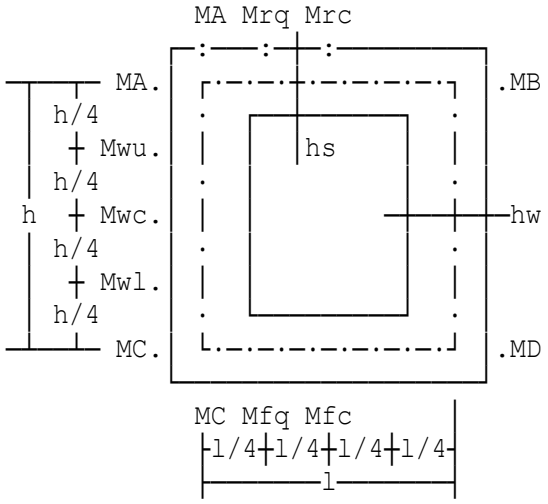

Bending moment and shearing force diagrams are symmetrical about vertical centre-line of section (i.e. MB=MA, MD=MC, etc).

Values of moment and shear are given at quarter-points along walls, floor and roof of culvert, as shown.
h and l are measured between centres of walls and slabs.
Moments and shear in culvert floor are only approximate.

Overall height of culvert	ho=3.25 m
Overall width of culvert	lo=2 m
Floor and roof thickness	hs=500 mm
Wall thickness	hw=825 mm
Degree of compressibility of soil	comp=0.25

Lateral earth pressure on culvert walls

Earth pressure at bottom of wall	qep(1)=22 kN/m²
Let	qep=qep(cycle)=22
With non-compressible soil:	
Moment at corner A	MAn=-qep*h^2*k/(30*K2)=-1.1461 kNm/m
Moment at corner C	MCn=MAn*K8/(2*k)=-10.519 kNm/m
With highly-compressible soil:	
Moment at corner A	MAc=-qep*h^2*k*K7/(60*K1*K3) =-2.1694 kNm/m
Moment at corner C	MCc=MAc*K8/K7=-2.5797 kNm/m
For soil condition considered:	
Moment at corner A	MA=MAc*comp+MAn*(1-comp)=-1.402 kNm/m
Moment at corner C	MC=MCc*comp+MCn*(1-comp)=-8.5339 kNm/m

Bending moments at intermediate points:

In roof:	at midspan	Mrm=MA=-1.402 kNm/m
	at 1/4-point	Mrq=MA=-1.402 kNm/m
In wall:	at 0.75h above base	Mwu=qep*h^2*5/128+(3*MA+MC)/4 =3.3141 kNm/m
	at 0.50h	Mwm=qep*h^2/16+(MA+MC)/2=5.4305 kNm/m
	at 0.25h	Mwl=qep*h^2*7/128+(MA+3*MC)/4 =2.3477 kNm/m
In floor:	at midspan	Mfm=MCc*comp=-0.64494 kNm/m
	at 1/4-point	Mfq=MCc*comp=-0.64494 kNm/m

Moments and shears due to action of current load

```
-1.402     -1.402     -1.402      0          0          0
  ┼──────────────────────┐                  ┼──────────────────────┐  -7.4899
  :                      │                  :                      │
  │                      │  3.3141          │                      │  -5.5993
  :                      │                  :                      │
  CL                     │  5.4305          CL                     │  0.072594
  :                      │                  :                      │
  │                      │  2.3477          │                      │  9.5257
  :                      │                  :                      │
  ┼──────────────────────┘                  ┼──────────────────────┘  22.76
-0.64494   -0.64494   -8.5339      0          0          0
```

BENDING MOMENTS (in kNm per metre run)

SHEARING FORCES (in kN per metre run)

Moments and shears are symmetrical about vertical centreline through section.

Location: Central concentrated load on wide shallow culvert

Design moments and shears in box culverts

The formulae employed and their basis are as given in Table 186 of the 10th Edition of the Reinforced Concrete Designer's Handbook.

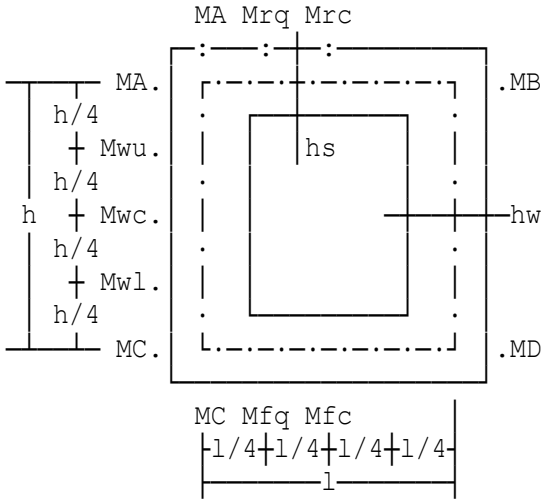

Bending moment and shearing force diagrams are symmetrical about vertical centre-line of section (i.e. MB=MA, MD=MC, etc).

Values of moment and shear are given at quarter-points along walls, floor and roof of culvert, as shown.
h and l are measured between centres of walls and slabs.
Moments and shear in culvert floor are only approximate.

Overall height of culvert	ho=1.75 m
Overall width of culvert	lo=8 m
Floor and roof thickness	hs=750 mm
Wall thickness	hw=350 mm
Degree of compressibility of soil	comp=0.8

Central concentrated (or line) load on culvert roof

Concentrated load	F(1)=750 kN/m
With non-compressible soil:	
Moment at corner A	MAn=-F*l/(4*K2)=-436.48 kNm/m
Moment at corner C	MCn=-MAn/2=218.24 kNm/m
With highly-compressible soil:	
Moment at corner A	MAc=-F*l*K4/(24*K1*K3)=-345.08 kNm/m
Moment at corner C	MCc=MAc*K6/K4=-177.75 kNm/m
For soil condition considered:	
Moment at corner A	MA=MAc*comp+MAn*(1-comp)=-363.36 kNm/m
Moment at corner C	MC=MCc*comp+MCn*(1-comp)=-98.555 kNm/m

Bending moments at intermediate points:

In roof:	at midspan	Mrm=F*l/4+MA=1071 kNm/m
	at 1/4-point	Mrq=(MA+Mrm)/2=353.83 kNm/m
In wall:	at 0.75h above base	Mwu=(3*MA+MC)/4=-297.16 kNm/m
	at 0.50h	Mwm=(MA+MC)/2=-230.96 kNm/m
	at 0.25h	Mwl=(MA+3*MC)/4=-164.76 kNm/m
In floor:	at midspan	Mfm=(F*l/8+MCc)*comp=431.55 kNm/m
	at 1/4-point	Mfq=(3*F*l/32+MCc)*comp=288.11 kNm/m

Moments and shears due to action of current load

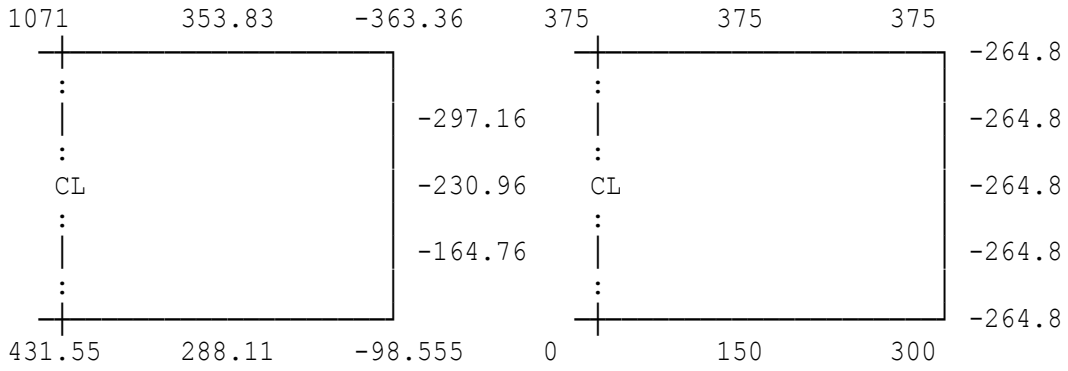

BENDING MOMENTS
(in kNm per metre run)

SHEARING FORCES
(in kN per metre run)

Moments and shears are symmetrical about vertical centreline through section.

Location: Deflection at the centre of a circular plate

Circular plate with simple support carrying a UDL

```
Radius of circular plate          a=1 m
Thickness of circular plate       t=0.01 m
Distance from centre to point     r=0 m
Uniformly distributed load        w=5 kN/m²
Modulus of elasticity             E=205E6 kN/m²
Poisson's ratio                   v=0.3
Reciprocal of Poisson's ratio     m=1/v=3.3333
Total load on plate               W=w*PI*a^2=15.708 kN
Maximum moment at centre          M=(3+v)*w*a^2/16=1.0313 kNm
Radial stress       sr=-3*W*((3*m+1)*(1-r^2/a^2))/(8*PI*m*t^2)
                      =-61875 kN/m²
Tangential stress   st=-3*W*((3*m+1)-(m+3)*r^2/a^2)/(8*PI*m*t^2)
                      =-61875 kN/m²
Deflection constant dc=((5*m+1)*a^2/(2*(m+1))+r^4/2/a^2-(3*m+1)*r^2/(m
                       +1))=2.0385
Deflection y=-3*W*(m^2-1)*dc/(8*PI*E*m^2*t^3)=-0.016966 m
```

Location: Rectangular plate with simple supports carrying a UDL

Rectangular plate supporting a UDL - this calculation computes deflections and bending moments for a rectangular plate in accordance with "Theory of Plates & Shells" by Timoshenko & Woinowsky-Krieger.

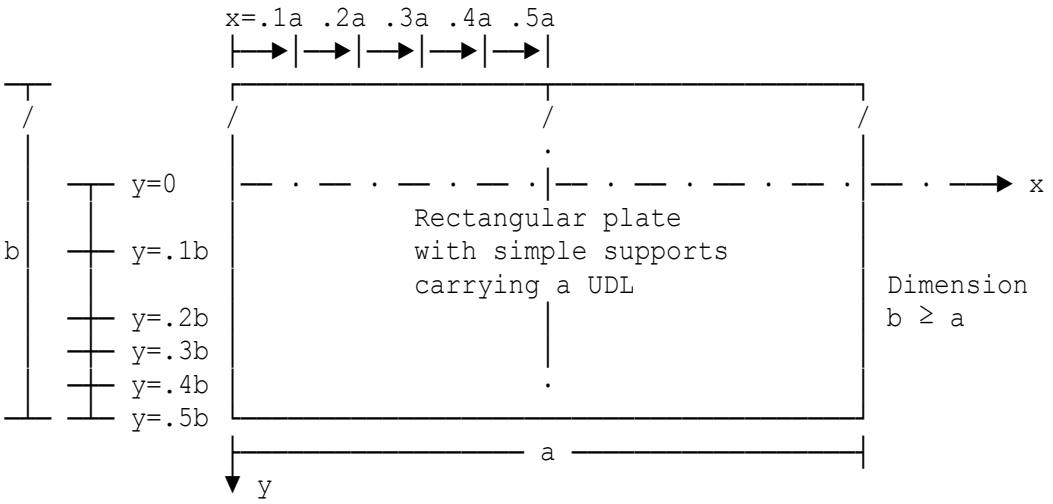

Width of plate	a=1 m
Length of plate	b=1.5 m
Thickness of plate	t=0.01 m
Uniformly distributed load	q=5 kN/m²
Modulus of elasticity	E=205E6 kN/m²
Max deflection	wmax=alpha*q*a^4/D=0.0020562 m
Bending moment/unit length	Mxmax=beta*q*a^2=0.406 kNm/m
Bending moment/unit length	Mymax=beta1*q*a^2=0.249 kNm/m
Shearing force/unit length	Qxmax=gamma*q*a=2.12 kN/m
Shearing force/unit length	Qymax=gamma1*q*a=1.815 kN/m
Support reaction for edge x	Vxmax=delta*q*a=2.43 kN/m
Support reaction for edge y	Vymax=delta1*q*a=2.4 kN/m
Corner tiedown reactions	R=eta*q*a^2=0.425 kN

From Timoshenko's table 6, Mx at position y=0 m i.e along x axis.

and x=0.1a=0.1 m	beta'=TABLE 6 for b'a=1.5, column=1 =0.0314
	Mx=beta'*q*a^2=0.157 kNm/m
and x=0.2a=0.2 m	beta'=TABLE 6 for b'a=1.5, column=2 =0.0544
	Mx=beta'*q*a^2=0.272 kNm/m
and x=0.3a=0.3 m	beta'=TABLE 6 for b'a=1.5, column=3 =0.0695
	Mx=beta'*q*a^2=0.3475 kNm/m
and x=0.4a=0.4 m	beta'=TABLE 6 for b'a=1.5, column=4 =0.0783
	Mx=beta'*q*a^2=0.3915 kNm/m
and x=0.5a=0.5 m	beta'=TABLE 6 for b'a=1.5, column=5 =0.0812
	Mx=beta'*q*a^2=0.406 kNm/m

From Timoshenko's table 6, My at position y=0 m i.e along x axis.

and x=0.1a=0.1 m	beta1'=TABLE 6 for b'a=1.5, column=6 =0.0173
	My=beta1'*q*a^2=0.0865 kNm/m

```
and x=0.2a=0.2 m                  beta1'=TABLE 6 for b'a=1.5, column=7
                                        =0.0312
                                  My=beta1'*q*a^2=0.156 kNm/m
and x=0.3a=0.3 m                  beta1'=TABLE 6 for b'a=1.5, column=8
                                        =0.0415
                                  My=beta1'*q*a^2=0.2075 kNm/m
and x=0.4a=0.4 m                  beta1'=TABLE 6 for b'a=1.5, column=9
                                        =0.0478
                                  My=beta1'*q*a^2=0.239 kNm/m
and x=0.5a=0.5 m                  beta1'=TABLE 6 for b'a=1.5, column=10
                                        =0.0498
                                  My=beta1'*q*a^2=0.249 kNm/m
From Timoshenko's table 7, Mx at position x=a/2=0.5 m i.e. centre
and y=0.4b=0.6 m                  beta''=TABLE 7 for b'a=1.5, column=1
                                        =0.0302
                                  Mx=beta''*q*a^2=0.151 kNm/m
and y=0.3b=0.45 m                 beta''=TABLE 7 for b'a=1.5, column=2
                                        =0.0532
                                  Mx=beta''*q*a^2=0.266 kNm/m
and y=0.2b=0.3 m                  beta''=TABLE 7 for b'a=1.5, column=3
                                        =0.069
                                  Mx=beta''*q*a^2=0.345 kNm/m
and y=0.1b=0.15 m                 beta''=TABLE 7 for b'a=1.5, column=4
                                        =0.0781
                                  Mx=beta''*q*a^2=0.3905 kNm/m
and y=0 m                         beta''=TABLE 7 for b'a=1.5, column=5
                                        =0.0812
                                  Mx=beta''*q*a^2=0.406 kNm/m
From Timoshenko's table 7, My at position x=a/2=0.5 m i.e. centre.
and y=0.4b=0.6 m                  bet1''=TABLE 7 for b'a=1.5, column=6
                                        =0.0275
                                  Mx=bet1''*q*a^2=0.1375 kNm/m
and y=0.3b=0.45 m                 bet1''=TABLE 7 for b'a=1.5, column=7
                                        =0.041
                                  Mx=bet1''*q*a^2=0.205 kNm/m
and y=0.2b=0.3 m                  bet1''=TABLE 7 for b'a=1.5, column=8
                                        =0.047
                                  Mx=bet1''*q*a^2=0.235 kNm/m
and y=0.1b=0.15 m                 bet1''=TABLE 7 for b'a=1.5, column=9
                                        =0.0493
                                  Mx=bet1''*q*a^2=0.2465 kNm/m
and y=0 m                         bet1''=TABLE 7 for b'a=1.5, column=10
                                        =0.0498
                                  Mx=bet1''*q*a^2=0.249 kNm/m
```

Location: Rectangular plate with three S.S. edges and one free

Rectangular plate supporting a UDL - this calculation computes deflections and bending moments for a rectangular plate in accordance with "Theory of Plates & Shells" by Timoshenko & Woinowsky-Krieger.

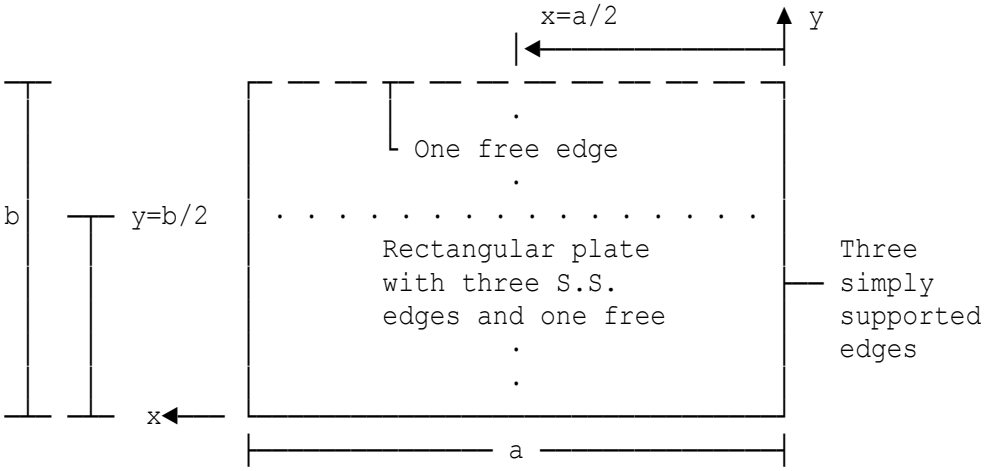

Width of plate	a=1 m
Length of plate	b=1.5 m
Thickness of plate	t=0.01 m
Uniformly distributed load	q=5 kN/m²
Modulus of elasticity	E=205E6 kN/m²
At x=a/2=0.5 m and y=b=1.5 m	
Max deflection	wmax=alpha*q*a^4/D=0.0038939 m
Bending moment/unit length	Mxmax=beta*q*a^2=0.64 kNm/m
At x=a/2=0.5 m and y=b/2=0.75 m	
Bending moment/unit length	Mx=beta*q*a^2=0.505 kNm/m

Location: Rectangular plate with built-in edges carrying a UDL

Rectangular plate supporting a UDL - this calculation computes deflections and bending moments for a rectangular plate in accordance with "Theory of Plates & Shells" by Timoshenko & Woinowsky-Krieger.

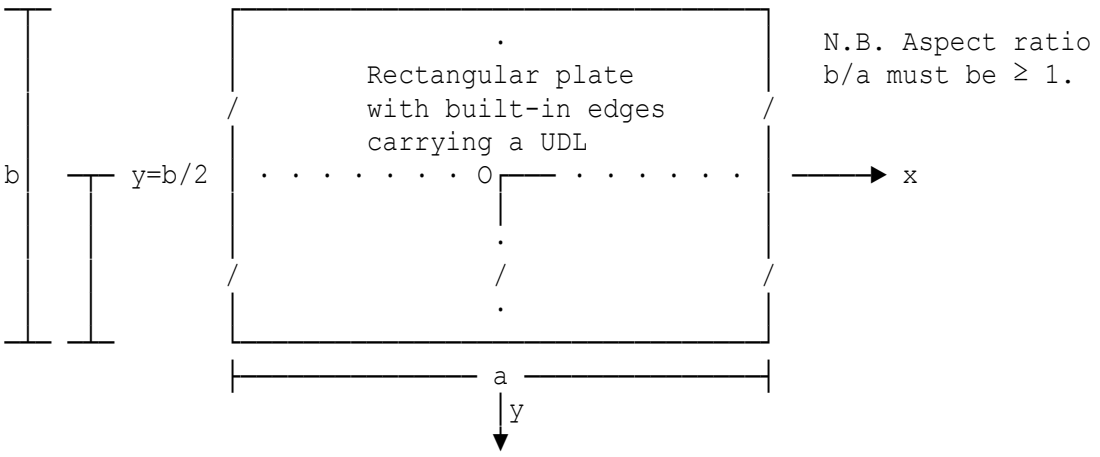

Width of plate	a=1 m
Length of plate	b=1.5 m
Thickness of plate	t=0.01 m
Uniformly distributed load	q=5 kN/m²
Modulus of elasticity	E=205E6 kN/m²
At x=0, y=0 i.e. centre	
Max deflection	wmax=alpha*q*a^4/D=0.58595E-3 m
At x=a/2=0.5 m and y=0 m	
Bending moment/unit length	Mx=beta*q*a^2=0.3785 kNm/m
At x=0 and y=b/2=0.75 m	
Bending moment/unit length	My=beta1*q*a^2=0.285 kNm/m
At x=0 and y=0 i.e. at centre	
Bending moment/unit length	Mx=beta*q*a^2=0.184 kNm/m
At x=0 and y=0 i.e at centre	
Bending moment/unit length	My=beta1*q*a^2=0.1015 kNm/m

Copyright 1986-2024 Fitzroy Systems Ltd.

Location: Subframe on grid A1-A4

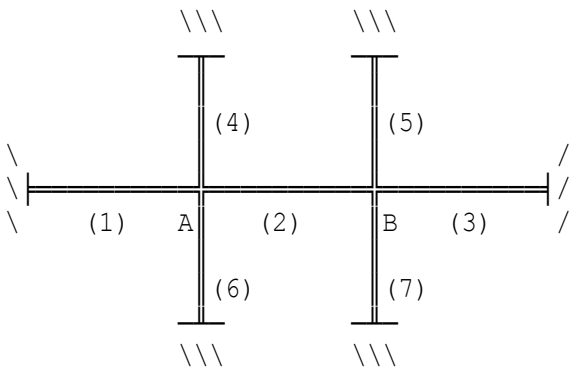

Clockwise fixed end moments are positive.
From inertias and lengths of beams and columns and FEM's from beams 1,2 & 3; computes end moments for beam 2.

Take 75% of inertia for pin ended members.

Take zero inertia and unit length for missing members.

Inertia of beam 1	I(1)=0.0054 m⁴
Length of beam 1	l(1)=6 m
Inertia of beam 2	I(2)=0.0054 m⁴
Length of beam 2	l(2)=6 m
Inertia of beam 3	I(3)=0.0054 m⁴
Length of beam 3	l(3)=6 m
Inertia of column 4	I(4)=0.675E-3 m⁴
Length of column 4	l(4)=2.7 m
Inertia of column 5	I(5)=0.675E-3 m⁴
Length of column 5	l(5)=2.7 m
Inertia of column 6	I(6)=0.675E-3 m⁴
Length of column 6	l(6)=2.7 m
Inertia of column 7	I(7)=0.675E-3 m⁴
Length of column 7	l(7)=2.7 m

Total No. of concentrated loads	Nc=1
Total number of UDL's	Nu=2

Span No. with concentrated load	Sc(1)=1
Distance from left hand end	Lc(1)=3 m
Dead load	DLc(1)=50 kN
Live load	LLc(1)=60 kN
Span number containing UDL	Su(1)=2
Distance from left end to start	Lau(1)=0 m
Distance from left end to end	Lbu(1)=6 m
Dead load	DLu(1)=10 kN/m
Live load	LLu(1)=20 kN/m
Span number containing UDL	Su(2)=3
Distance from left end to start	Lau(2)=3 m
Distance from left end to end	Lbu(2)=6 m
Dead load	DLu(2)=15 kN/m
Live load	LLu(2)=25 kN/m

All spans loaded with factored DL + LL

Factored FEM at end of span 1	Mfa'=1.4*dle(1)+1.6*lle(1)=124.5 kNm
Factored FEM at start of span 2	Mfa=1.4*dls(2)+1.6*lls(2)=-138 kNm
Factored FEM at end of span 2	Mfb=1.4*dle(2)+1.6*lle(2)=138 kNm
Factored FEM at start of span 3	Mfb'=1.4*dls(3)+1.6*lls(3)=-57.188 kNm
Sum of FEM's at A	sigMfa=Mfa'+Mfa=-13.5 kNm
Sum of FEM's at B	sigMfb=Mfb+Mfb'=80.813 kNm
Rotation at A (for unit E)	thetaA=k1*sigMfa+k2*sigMfb=-13251
Rotation at B (for unit E)	thetaB=k3*sigMfa+k4*sigMfb=37729
Beam (2) moment at A	Ma=Mfa-(I(2)/l(2))*(thetaA+0.5 *thetaB)=-143.05 kNm
Beam (2) moment at B	Mb=Mfb-(I(2)/l(2))*(thetaB+0.5 *thetaA)=110.01 kNm

BMs at 20th points along span 2
(Sagging is positive)

Distance from start	Bending moment
0 m	-143.05 kNm
0.3 m	-102.07 kNm
0.6 m	-65.227 kNm
0.9 m	-32.525 kNm
1.2 m	-3.9629 kNm
1.5 m	20.459 kNm
1.8 m	40.742 kNm
2.1 m	56.884 kNm
2.4 m	68.886 kNm
2.7 m	76.748 kNm
3 m	80.47 kNm
3.3 m	80.053 kNm
3.6 m	75.495 kNm
3.9 m	66.797 kNm
4.2 m	53.959 kNm
4.5 m	36.982 kNm
4.8 m	15.864 kNm
5.1 m	-9.394 kNm
5.4 m	-38.792 kNm
5.7 m	-72.33 kNm
6 m	-110.01 kNm

Centre span loaded with factored DL + LL, others with DL only

Factored FEM at end of span 1	Mfa'=1.0*dle(1)+0.0*lle(1)=37.5 kNm
Factored FEM at start of span 2	Mfa=1.4*dls(2)+1.6*lls(2)=-138 kNm
Factored FEM at end of span 2	Mfb=1.4*dle(2)+1.6*lle(2)=138 kNm
Factored FEM at start of span 3	Mfb'=1.0*dls(3)+0.0*lls(3)=-14.063 kNm
Sum of FEM's at A	sigMfa=Mfa'+Mfa=-100.5 kNm
Sum of FEM's at B	sigMfb=Mfb+Mfb'=123.94 kNm
Rotation at A (for unit E)	thetaA=k1*sigMfa+k2*sigMfb=-56397
Rotation at B (for unit E)	thetaB=k3*sigMfa+k4*sigMfb=64920
Beam (2) moment at A	Ma=Mfa-(I(2)/l(2))*(thetaA+0.5 *thetaB)=-116.46 kNm
Beam (2) moment at B	Mb=Mfb-(I(2)/l(2))*(thetaB+0.5 *thetaA)=104.95 kNm

Copyright 1986-2024 Fitzroy Systems Ltd.

BMs at 20th points along span 2
(Sagging is positive)

Distance from start	Bending moment
0 m	-116.46 kNm
0.3 m	-76.551 kNm
0.6 m	-40.786 kNm
0.9 m	-9.1605 kNm
1.2 m	18.325 kNm
1.5 m	41.67 kNm
1.8 m	60.875 kNm
2.1 m	75.941 kNm
2.4 m	86.866 kNm
2.7 m	93.651 kNm
3 m	96.296 kNm
3.3 m	94.802 kNm
3.6 m	89.167 kNm
3.9 m	79.392 kNm
4.2 m	65.478 kNm
4.5 m	47.423 kNm
4.8 m	25.228 kNm
5.1 m	-1.1066 kNm
5.4 m	-31.581 kNm
5.7 m	-66.196 kNm
6 m	-104.95 kNm

Copyright 1986-2024 Fitzroy Systems Ltd.

Location: Subframe with zero columns over and no right hand beam

```
            \\\         \\\
              ||          ||
              ||          ||
              ||(4)       ||(5)
\             ||          ||            /
\|============||==========||============|/
\    (1)   A  ||   (2)    ||B   (3)    /
              ||          ||
              ||(6)       ||(7)
              ||          ||
            \\\         \\\
```

Clockwise fixed end moments are positive.
From inertias and lengths of beams and columns and FEM's from beams 1,2 & 3; computes end moments for beam 2.

Take 75% of inertia for pin ended members.

Take zero inertia and unit length for missing members.

Inertia of beam 1	I(1)=0.0054 m⁴
Length of beam 1	l(1)=6 m
Inertia of beam 2	I(2)=0.0054 m⁴
Length of beam 2	l(2)=6 m
Inertia of beam 3	I(3)=0 m⁴
Length of beam 3	l(3)=1 m
Inertia of column 4	I(4)=0 m⁴
Length of column 4	l(4)=1 m
Inertia of column 5	I(5)=0 m⁴
Length of column 5	l(5)=1 m
Inertia of column 6	I(6)=0.675E-3 m⁴
Length of column 6	l(6)=2.7 m
Inertia of column 7	I(7)=0.675E-3 m⁴
Length of column 7	l(7)=2.7 m

Total No. of concentrated loads	Nc=2
Total number of UDL's	Nu=2

Span No. with concentrated load	Sc(1)=1
Distance from left hand end	Lc(1)=3 m
Dead load	DLc(1)=50 kN
Live load	LLc(1)=60 kN
Span No. with concentrated load	Sc(2)=2
Distance from left hand end	Lc(2)=3 m
Dead load	DLc(2)=50 kN
Live load	LLc(2)=60 kN
Span number containing UDL	Su(1)=1
Distance from left end to start	Lau(1)=0 m
Distance from left end to end	Lbu(1)=6 m
Dead load	DLu(1)=10 kN/m
Live load	LLu(1)=20 kN/m
Span number containing UDL	Su(2)=2
Distance from left end to start	Lau(2)=3 m
Distance from left end to end	Lbu(2)=6 m
Dead load	DLu(2)=15 kN/m
Live load	LLu(2)=25 kN/m

All spans loaded with factored DL + LL

Factored FEM at end of span 1	Mfa'=1.4*dle(1)+1.6*lle(1)=262.5 kNm
Factored FEM at start of span 2	Mfa=1.4*dls(2)+1.6*lls(2)=-181.69 kNm
Factored FEM at end of span 2	Mfb=1.4*dle(2)+1.6*lle(2)=250.31 kNm
Factored FEM at start of span 3	Mfb'=1.4*dls(3)+1.6*lls(3)=0 kNm
Sum of FEM's at A	sigMfa=Mfa'+Mfa=80.813 kNm
Sum of FEM's at B	sigMfb=Mfb+Mfb'=250.31 kNm
Rotation at A (for unit E)	thetaA=k1*sigMfa+k2*sigMfb=-9144.4
Rotation at B (for unit E)	thetaB=k3*sigMfa+k4*sigMfb=221241
Beam (2) moment at A	Ma=Mfa-(I(2)/l(2))*(thetaA+0.5 *thetaB)=-273.02 kNm
Beam (2) moment at B	Mb=Mfb-(I(2)/l(2))*(thetaB+0.5 *thetaA)=55.31 kNm

BMs at 20th points along span 2
(Sagging is positive)

Distance from start	Bending moment
0 m	-273.02 kNm
0.3 m	-223.51 kNm
0.6 m	-174 kNm
0.9 m	-124.49 kNm
1.2 m	-74.975 kNm
1.5 m	-25.465 kNm
1.8 m	24.046 kNm
2.1 m	73.556 kNm
2.4 m	123.07 kNm
2.7 m	172.58 kNm
3 m	222.09 kNm
3.3 m	219.05 kNm
3.6 m	210.53 kNm
3.9 m	196.51 kNm
4.2 m	177.01 kNm
4.5 m	152.01 kNm
4.8 m	121.53 kNm
5.1 m	85.554 kNm
5.4 m	44.089 kNm
5.7 m	-2.8656 kNm
6 m	-55.31 kNm

Centre span loaded with factored DL + LL, others with DL only

Factored FEM at end of span 1	Mfa'=1.0*dle(1)+0.0*lle(1)=67.5 kNm
Factored FEM at start of span 2	Mfa=1.4*dls(2)+1.6*lls(2)=-181.69 kNm
Factored FEM at end of span 2	Mfb=1.4*dle(2)+1.6*lle(2)=250.31 kNm
Factored FEM at start of span 3	Mfb'=1.0*dls(3)+0.0*lls(3)=0 kNm
Sum of FEM's at A	sigMfa=Mfa'+Mfa=-114.19 kNm
Sum of FEM's at B	sigMfb=Mfb+Mfb'=250.31 kNm
Rotation at A (for unit E)	thetaA=k1*sigMfa+k2*sigMfb=-113205
Rotation at B (for unit E)	thetaB=k3*sigMfa+k4*sigMfb=261961
Beam (2) moment at A	Ma=Mfa-(I(2)/l(2))*(thetaA+0.5 *thetaB)=-197.69 kNm
Beam (2) moment at B	Mb=Mfb-(I(2)/l(2))*(thetaB+0.5 *thetaA)=65.49 kNm

BMs at 20th points along span 2
(Sagging is positive)

Distance from start	Bending moment
0 m	-197.69 kNm
0.3 m	-152.45 kNm
0.6 m	-107.22 kNm
0.9 m	-61.981 kNm
1.2 m	-16.746 kNm
1.5 m	28.488 kNm
1.8 m	73.723 kNm
2.1 m	118.96 kNm
2.4 m	164.19 kNm
2.7 m	209.43 kNm
3 m	254.66 kNm
3.3 m	247.35 kNm
3.6 m	234.55 kNm
3.9 m	216.26 kNm
4.2 m	192.48 kNm
4.5 m	163.21 kNm
4.8 m	128.45 kNm
5.1 m	88.201 kNm
5.4 m	42.46 kNm
5.7 m	-8.7699 kNm
6 m	-65.49 kNm

Copyright 1986-2024 Fitzroy Systems Ltd.

Location: Plane truss analysis for triangulated frameworks

Number of known forces (1-4)	nkf=1
Number of unknown forces (1-2)	nuf=2
First known force	fkf=40 kN
Angle of first known force	afkf=270°
Angle of first unknown force	afuf=0°
Angle of second unknown force	asuf=45°
First unknown force	-40 kN tension
Second unknown force	56.569 kN compression

Location: Example from 'Computer Methods in Solid Mechanics'

Plane truss analysis

Elastic modulus for truss members E=205E6 kN/m²
Number of joints NJ=4
Number of members NM=5
Joint number 1 must always be a pinned support, the highest joint number (4 for this case) must always be a roller. Joints must be numbered consecutively from 1 such that only two unknown member forces occur at each joint. No more than five members may meet at a joint.

X coordinate for joint 1	X(1)=0 m
Y coordinate for joint 1	Y(1)=0 m
X coordinate for joint 2	X(2)=2 m
Y coordinate for joint 2	Y(2)=1 m
X coordinate for joint 3	X(3)=2 m
Y coordinate for joint 3	Y(3)=2 m
X coordinate for joint 4	X(4)=3 m
Y coordinate for joint 4	Y(4)=1 m

The order of numbering of members is significant. These are numbered consecutively counterclockwise about each joint starting with joint 1 and working through the joints in order.

Joint number at start of member	JS(1)=1
Joint number at end of member	JE(1)=2
Joint number at start of member	JS(2)=1
Joint number at end of member	JE(2)=3
Joint number at start of member	JS(3)=2
Joint number at end of member	JE(3)=4
Joint number at start of member	JS(4)=2
Joint number at end of member	JE(4)=3
Joint number at start of member	JS(5)=3
Joint number at end of member	JE(5)=4
X-sectional area of member	A(1)=0.001 m²
X-sectional area of member	A(2)=0.001 m²
X-sectional area of member	A(3)=0.001 m²
X-sectional area of member	A(4)=0.001 m²
X-sectional area of member	A(5)=0.001 m²
Loaded joint number	LJ(1)=2
Horizontal load (+ve to right)	H(2)=0 kN
Vertical load (positive up)	V(2)=20 kN
Loaded joint number	LJ(2)=3
Horizontal load (+ve to right)	H(3)=6 kN
Vertical load (positive up)	V(3)=10 kN
Loaded joint number	LJ(3)=0

Support reactions

Positive is up and to the right.

Vertical reaction at joint 1	-14 kN
Horizontal reaction at joint 1	-6 kN
Vertical reaction at joint 4	-16 kN
Horizontal reaction at joint 4	0 kN
Σ vertical forces applied	30 kN
Σ horizontal forces applied	6 kN

Member forces

Member number	Forces in member Positive denotes tension
1	-17.889 kN
2	31.113 kN
3	-16 kN
4	-28 kN
5	22.627 kN

Joint deflections

Positive is up and to the right.

Vertical defln at joint 3	0.79488E-3 m
Horizontal defln at joint 3	-0.18781E-3 m

Location: Example from 'David Smith Associates'

Plane truss analysis

Elastic modulus for truss members E=205E6 kN/m²
Number of joints NJ=13
Number of members NM=23
Joint number 1 must always be a pinned support, the highest joint number (13 for this case) must always be a roller. Joints must be numbered consecutively from 1 such that only two unknown member forces occur at each joint. No more than five members may meet at a joint.
X coordinate for joint 1 X(1)=0 m
Y coordinate for joint 1 Y(1)=0 m
X coordinate for joint 2 X(2)=1 m
Y coordinate for joint 2 Y(2)=0.45 m
X coordinate for joint 3 X(3)=2 m
Y coordinate for joint 3 Y(3)=0 m
X coordinate for joint 4 X(4)=3 m
Y coordinate for joint 4 Y(4)=0.45 m
X coordinate for joint 5 X(5)=4 m
Y coordinate for joint 5 Y(5)=0 m
X coordinate for joint 6 X(6)=5 m
Y coordinate for joint 6 Y(6)=0.45 m
X coordinate for joint 7 X(7)=6 m
Y coordinate for joint 7 Y(7)=0 m
X coordinate for joint 8 X(8)=7 m
Y coordinate for joint 8 Y(8)=0.45 m
X coordinate for joint 9 X(9)=8 m
Y coordinate for joint 9 Y(9)=0 m
X coordinate for joint 10 X(10)=9 m
Y coordinate for joint 10 Y(10)=0.45 m
X coordinate for joint 11 X(11)=10 m
Y coordinate for joint 11 Y(11)=0 m
X coordinate for joint 12 X(12)=11 m
Y coordinate for joint 12 Y(12)=0.45 m
X coordinate for joint 13 X(13)=12 m
Y coordinate for joint 13 Y(13)=0 m
The order of numbering of members is significant. These are numbered consecutively counterclockwise about each joint starting with joint 1 and working through the joints in order.
Joint number at start of member JS(1)=1
Joint number at end of member JE(1)=3
Joint number at start of member JS(2)=1
Joint number at end of member JE(2)=2
Joint number at start of member JS(3)=2
Joint number at end of member JE(3)=3
Joint number at start of member JS(4)=2
Joint number at end of member JE(4)=4
Joint number at start of member JS(5)=3
Joint number at end of member JE(5)=5
Joint number at start of member JS(6)=3
Joint number at end of member JE(6)=4
Joint number at start of member JS(7)=4
Joint number at end of member JE(7)=5

Joint number at start of member JS(8)=4
Joint number at end of member JE(8)=6
Joint number at start of member JS(9)=5
Joint number at end of member JE(9)=7
Joint number at start of member JS(10)=5
Joint number at end of member JE(10)=6
Joint number at start of member JS(11)=6
Joint number at end of member JE(11)=7
Joint number at start of member JS(12)=6
Joint number at end of member JE(12)=8
Joint number at start of member JS(13)=7
Joint number at end of member JE(13)=9
Joint number at start of member JS(14)=7
Joint number at end of member JE(14)=8
Joint number at start of member JS(15)=8
Joint number at end of member JE(15)=9
Joint number at start of member JS(16)=8
Joint number at end of member JE(16)=10
Joint number at start of member JS(17)=9
Joint number at end of member JE(17)=11
Joint number at start of member JS(18)=9
Joint number at end of member JE(18)=10
Joint number at start of member JS(19)=10
Joint number at end of member JE(19)=11
Joint number at start of member JS(20)=10
Joint number at end of member JE(20)=12
Joint number at start of member JS(21)=11
Joint number at end of member JE(21)=13
Joint number at start of member JS(22)=11
Joint number at end of member JE(22)=12
Joint number at start of member JS(23)=12
Joint number at end of member JE(23)=13
X-sectional area of member A(1)=0.001 m²
X-sectional area of member A(2)=0.001 m²
X-sectional area of member A(3)=0.001 m²
X-sectional area of member A(4)=0.001 m²
X-sectional area of member A(5)=0.001 m²
X-sectional area of member A(6)=0.001 m²
X-sectional area of member A(7)=0.001 m²
X-sectional area of member A(8)=0.001 m²
X-sectional area of member A(9)=0.001 m²
X-sectional area of member A(10)=0.001 m²
X-sectional area of member A(11)=0.001 m²
X-sectional area of member A(12)=0.001 m²
X-sectional area of member A(13)=0.001 m²
X-sectional area of member A(14)=0.001 m²
X-sectional area of member A(15)=0.001 m²
X-sectional area of member A(16)=0.001 m²
X-sectional area of member A(17)=0.001 m²
X-sectional area of member A(18)=0.001 m²
X-sectional area of member A(19)=0.001 m²
X-sectional area of member A(20)=0.001 m²
X-sectional area of member A(21)=0.001 m²
X-sectional area of member A(22)=0.001 m²
X-sectional area of member A(23)=0.001 m²

Loaded joint number	LJ(1)=1
Horizontal load (+ve to right)	H(1)=0 kN
Vertical load (positive up)	V(1)=-4.2 kN
Loaded joint number	LJ(2)=2
Horizontal load (+ve to right)	H(2)=0 kN
Vertical load (positive up)	V(2)=-12.4 kN
Loaded joint number	LJ(3)=4
Horizontal load (+ve to right)	H(4)=0 kN
Vertical load (positive up)	V(4)=-16.5 kN
Loaded joint number	LJ(4)=6
Horizontal load (+ve to right)	H(6)=0 kN
Vertical load (positive up)	V(6)=-16.5 kN
Loaded joint number	LJ(5)=8
Horizontal load (+ve to right)	H(8)=0 kN
Vertical load (positive up)	V(8)=-16.5 kN
Loaded joint number	LJ(6)=10
Horizontal load (+ve to right)	H(10)=0 kN
Vertical load (positive up)	V(10)=-16.5 kN
Loaded joint number	LJ(7)=12
Horizontal load (+ve to right)	H(12)=0 kN
Vertical load (positive up)	V(12)=-12.4 kN
Loaded joint number	LJ(8)=13
Horizontal load (+ve to right)	H(13)=0 kN
Vertical load (positive up)	V(13)=-4.2 kN
Loaded joint number	LJ(9)=0

Support reactions

Positive is up and to the right.

Vertical reaction at joint 1	49.6 kN
Horizontal reaction at joint 1	0 kN
Vertical reaction at joint 13	49.6 kN
Horizontal reaction at joint 13	0 kN
Σ vertical forces applied	-99.2 kN
Σ horizontal forces applied	0 kN

Member forces

Member number	Forces in member Positive denotes tension
1	100.89 kN
2	-110.63 kN
3	80.416 kN
4	-174.22 kN
5	247.56 kN
6	-80.416 kN
7	40.208 kN
8	-284.22 kN
9	320.89 kN
10	-40.208 kN
11	0 kN
12	-320.89 kN
13	320.89 kN
14	0 kN
15	-40.208 kN
16	-284.22 kN
17	247.56 kN

18	40.208 kN
19	-80.416 kN
20	-174.22 kN
21	100.89 kN
22	80.416 kN
23	-110.63 kN

Joint deflections

Positive is up and to the right.

Vertical defln at joint 7	0.061167 m
Horizontal defln at joint 7	-0.0065301 m

Location: Multi-storey & multi-bay frames by moment distribution

The method used follows that given in 'Computer Methods in Solid Mechanics' by Gennaro. The effects of axial and shear deformations are ignored, as is traditional in moment distribution. Loading data comprises: horizontal loads applied at each floor level, vertical point loads and full or partial UDL's applied to beams.

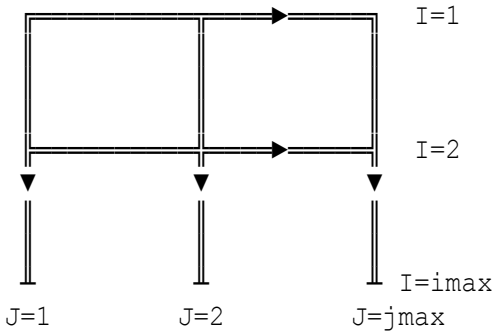

Levels are numbered from top down to ground floor (from 1 to imax).

Column rows are numbered from left to right (from 1 to jmax).

Column bases may be either fixed (jond=1) or pinned (jond=0).

Number of levels	imax=4
Number of column rows	jmax=5
Fixity of base	jond=0

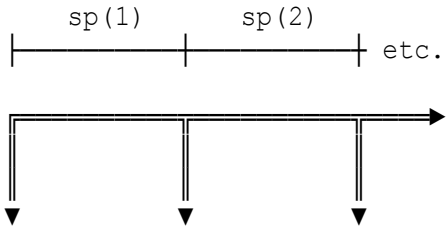

Spans in order, left to right, from 1 to 4 spans.

sp(1)=18.75 m
sp(2)=22 m
sp(3)=24 m
sp(4)=20.25 m

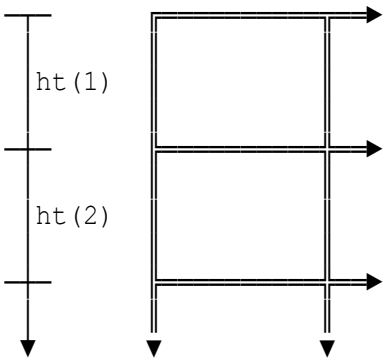

Storey heights in order, top to bottom, from 1 to 3 storeys.

ht(1)=15 m
ht(2)=16 m
ht(3)=18.75 m

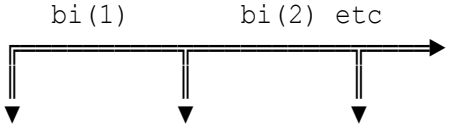

Beam inertias in order, left to right & top to bottom, 1 to 12

bi(1)=100 cm⁴
bi(2)=100 cm⁴
bi(3)=0 cm⁴
bi(4)=0 cm⁴
bi(5)=200 cm⁴
bi(6)=200 cm⁴
bi(7)=400 cm⁴
bi(8)=0 cm⁴
bi(9)=300 cm⁴
bi(10)=360 cm⁴
bi(11)=425 cm⁴
bi(12)=300 cm⁴

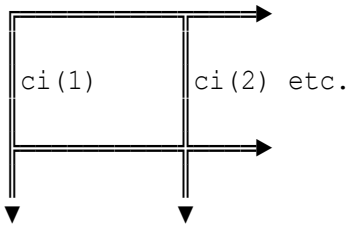

Column inertias in order, left to right & top to bottom 1 to 15

ci(1)=100 cm⁴
ci(2)=100 cm⁴
ci(3)=100 cm⁴
ci(4)=0 cm⁴
ci(5)=0 cm⁴
ci(6)=200 cm⁴
ci(7)=300 cm⁴
ci(8)=300 cm⁴
ci(9)=250 cm⁴
ci(10)=0 cm⁴
ci(11)=300 cm⁴
ci(12)=400 cm⁴
ci(13)=400 cm⁴
ci(14)=375 cm⁴
ci(15)=250 cm⁴

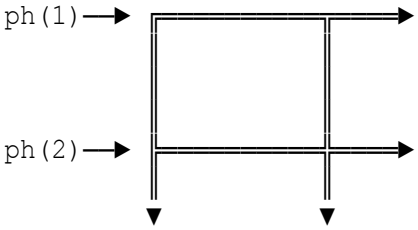

Horizontal (sway) loads applied to each floor level, top to bottom in order. Positive loads act from left to right (3 : reqd)

ph(1)=0 kN
ph(2)=0 kN
ph(3)=0 kN

Total No. of vertical UDL's	M=6
Level number containing UDL	ui(1)=1
Span number containing UDL	uj(1)=1
Magnitude of UDL (+ve upwards)	uw(1)=-2 kN/m
Dist to start of UDL from LH col	ua(1)=0 m

```
Dist to end of UDL from LH column ub(1)=18.75 m
Level number containing UDL       ui(2)=1
Span number containing UDL        uj(2)=2
Magnitude of UDL (+ve upwards)    uw(2)=-2 kN/m
Dist to start of UDL from LH col  ua(2)=0 m
Dist to end of UDL from LH column ub(2)=22 m
Level number containing UDL       ui(3)=2
Span number containing UDL        uj(3)=1
Magnitude of UDL (+ve upwards)    uw(3)=-4 kN/m
Dist to start of UDL from LH col  ua(3)=0 m
Dist to end of UDL from LH column ub(3)=18.75 m
Level number containing UDL       ui(4)=2
Span number containing UDL        uj(4)=3
Magnitude of UDL (+ve upwards)    uw(4)=-4 kN/m
Dist to start of UDL from LH col  ua(4)=0 m
Dist to end of UDL from LH column ub(4)=24 m
Level number containing UDL       ui(5)=3
Span number containing UDL        uj(5)=1
Magnitude of UDL (+ve upwards)    uw(5)=-4 kN/m
Dist to start of UDL from LH col  ua(5)=0 m
Dist to end of UDL from LH column ub(5)=18.75 m
Level number containing UDL       ui(6)=3
Span number containing UDL        uj(6)=3
Magnitude of UDL (+ve upwards)    uw(6)=-4.25 kN/m
Dist to start of UDL from LH col  ua(6)=0 m
Dist to end of UDL from LH column ub(6)=24 m
Total No of vertical point loads  N=8
Level no. containing point load   pi(1)=1
Span number containing point load pj(1)=1
Magnitude of load (+ve upwards)   pv(1)=-10 kN
Distance from start of span       pa(1)=18.75 m
Level no. containing point load   pi(2)=1
Span number containing point load pj(2)=2
Magnitude of load (+ve upwards)   pv(2)=5 kN
Distance from start of span       pa(2)=5 m
Level no. containing point load   pi(3)=1
Span number containing point load pj(3)=2
Magnitude of load (+ve upwards)   pv(3)=-5 kN
Distance from start of span       pa(3)=10 m
Level no. containing point load   pi(4)=2
Span number containing point load pj(4)=3
Magnitude of load (+ve upwards)   pv(4)=-10 kN
Distance from start of span       pa(4)=4 m
Level no. containing point load   pi(5)=2
Span number containing point load pj(5)=3
Magnitude of load (+ve upwards)   pv(5)=-2 kN
Distance from start of span       pa(5)=11.5 m
Level no. containing point load   pi(6)=3
Span number containing point load pj(6)=3
Magnitude of load (+ve upwards)   pv(6)=-20 kN
Distance from start of span       pa(6)=7.125 m
Level no. containing point load   pi(7)=3
Span number containing point load pj(7)=4
Magnitude of load (+ve upwards)   pv(7)=-5 kN
Distance from start of span       pa(7)=11 m
```

Level no. containing point load pi(8)=3
Span number containing point load pj(8)=4
Magnitude of load (+ve upwards) pv(8)=1 kN
Distance from start of span pa(8)=13 m
Test increment eps=0.01 kNm

Beam moments at 20th points

The sign convention given above is that generally used in the computer analysis of structures. The traditional convention of sagging positive and hogging negative cannot apply to vertical members. Because the traditional convention is still in general use for the design of beams, it is used in the following tables of beam moments at 20th points.

Level 1 span 1 BMs at 20th points (+ve sagging) left to right kNm

-31.12	-17.09	-4.831	5.675	14.42	21.41
	26.65	30.12	31.84	31.8	30
	26.44	21.13	14.05	5.225	-5.363
	-17.71	-31.81	-47.67	-65.29	-84.67

Level 1 span 2 BMs at 20th points (+ve sagging) left to right kNm

-88.88	-65.26	-44.05	-25.26	-8.889	7.56
	24.59	39.2	51.39	61.16	63.51
	62.93	59.94	54.53	46.7	36.45
	23.78	8.689	-8.822	-28.75	-51.1

Level 2 span 1 BMs at 20th points (+ve sagging) left to right kNm

-94.83	-61.79	-32.27	-6.271	16.22	35.19
	50.65	62.59	71.01	75.92	77.32
	75.19	69.56	60.4	47.74	31.55
	11.85	-11.36	-38.09	-68.34	-102.1

Level 2 span 2 BMs at 20th points (+ve sagging) left to right kNm

-3	-4.788	-6.577	-8.365	-10.15	-11.94
	-13.73	-15.52	-17.31	-19.1	-20.88
	-22.67	-24.46	-26.25	-28.04	-29.83
	-31.61	-33.4	-35.19	-36.98	-38.77

Level 2 span 3 BMs at 20th points (+ve sagging) left to right kNm

-185.9	-117.4	-54.72	2.232	45.42	78.85
	106.5	128.4	144.6	155	158.6
	155.1	145.8	130.7	109.9	83.36
	51.04	12.95	-30.9	-80.51	-135.9

Level 3 span 1 BMs at 20th points (+ve sagging) left to right kNm

-87.68	-55.3	-26.43	-1.076	20.76	39.08
	53.89	65.18	72.95	77.21	77.96
	75.18	68.9	59.09	45.77	28.94
	8.589	-15.28	-42.66	-73.56	-108

Level 3 span 2 BMs at 20th points (+ve sagging) left to right kNm

-0.458	-2.841	-5.224	-7.607	-9.99	-12.37
	-14.76	-17.14	-19.52	-21.9	-24.29
	-26.67	-29.05	-31.44	-33.82	-36.2
	-38.59	-40.97	-43.35	-45.73	-48.12

Level 3 span 3 BMs at 20th points (+ve sagging) left to right kNm

-233.1	-157	-87.04	-23.21	34.51	86.11
	130.1	145.4	154.7	157.8	154.8
	145.7	130.4	109	81.56	47.96
	8.235	-37.61	-89.57	-147.7	-211.9

Level 3 span 4 BMs at 20th points (+ve sagging) left to right kNm

-52.36	-47.63	-42.91	-38.18	-33.45	-28.72
	-23.99	-19.26	-14.53	-9.802	-5.073
	-1.031	-1.365	-1.536	-0.8564	-0.1773
	0.5018	1.181	1.86	2.539	3.218

Copyright 1986-2024 Fitzroy Systems Ltd.

Location: Multi-storey frame by Naylor's Method

Number of storeys (1 to 4) ns=4
Span of frame L=20 m

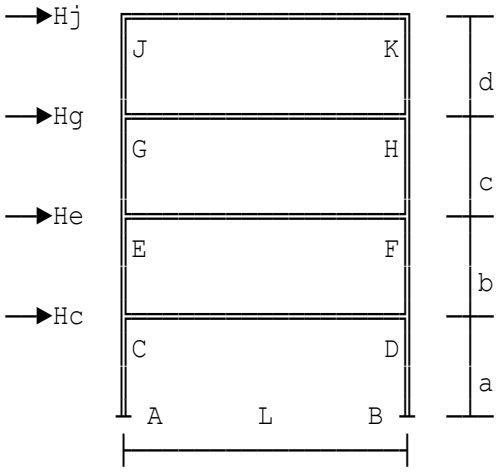

Analysis of 1 bay x 4 storey frame using Naylor's method; Ref: the Structural Engineer April 1950.

Inertia of columns:
Ground floor Ig
First floor I1
Second floor I2
Third floor I3

Inertia of beams Ib

Height ground to first floor a=10 m
Height first to second floor b=10 m
Height second to third floor c=10 m
Height third to fourth floor d=10 m
Inertia of beams Ib=20 m⁴
Inertia of ground floor columns Ig=40 m⁴
Inertia of first floor columns I1=30 m⁴
Inertia of second floor columns I2=20 m⁴
Inertia of third floor columns I3=10 m⁴
Horizontal force at first floor Hc=-50 kN
Horizontal force at second floor He=100 kN
Horizontal force at third floor Hg=100 kN
Horizontal force at fourth floor Hj=0 kN

Moment distribution:

A		C			E			G			J
Distribution factors:											
0	0.308	0.462	0.231	0.273	0.545	0.182	0.222	0.667	0.111	0.143	0.857
Fixed end moments:											
-375	-375	0	-500	-500	0	-250	-250	0	0	0	0

D denotes distributed moments — 1st line of each pair is beam moment
C denotes carry over moments F denotes final moments

D		404			409			167			0
D	0	269	202	205	136	55.6	27.8	0			
C	-269	0	-205	-202	-55.6	-136	0	-27.8			
D		94.4			140			90.9			23.8
D	0	62.9	47.2	70.2	46.8	30.3	15.2	3.97			
C	-62.9	0	-70.2	-47.2	-30.3	-46.8	-3.97	-15.2			
D		32.4			42.3			33.9			13
D	0	21.6	16.2	21.1	14.1	11.3	5.64	2.16			
C	-21.6	0	-21.1	-16.2	-11.3	-14.1	-2.16	-5.64			
D		9.76			15			10.8			4.84

D 0	6.5	4.88	7.5	5	3.61	1.81	0.806
C -6.5	0	-7.5	-4.88	-3.61	-5	-0.806	-1.81
D	3.46		4.63		3.87		1.55
D 0	2.31	1.73	2.32	1.54	1.29	0.645	0
C -2.31	0	-2.32	-1.73	-1.29	-1.54	0	-0.645
D	1.07		1.65		1.2		0.553
D 0	0.712	0.534	0.824	0.549	0.4	0	0
C -0.712	0	-0.824	-0.534	-0.4	-0.549	0	0
D	0.38		0.51		0.427		0
D 0	0	0	0	0	0	0	0
C 0	0	0	0	0	0	0	0
F	545		614		308		44
F -739	-11.4	-534	-466	-148	-352	44	-44

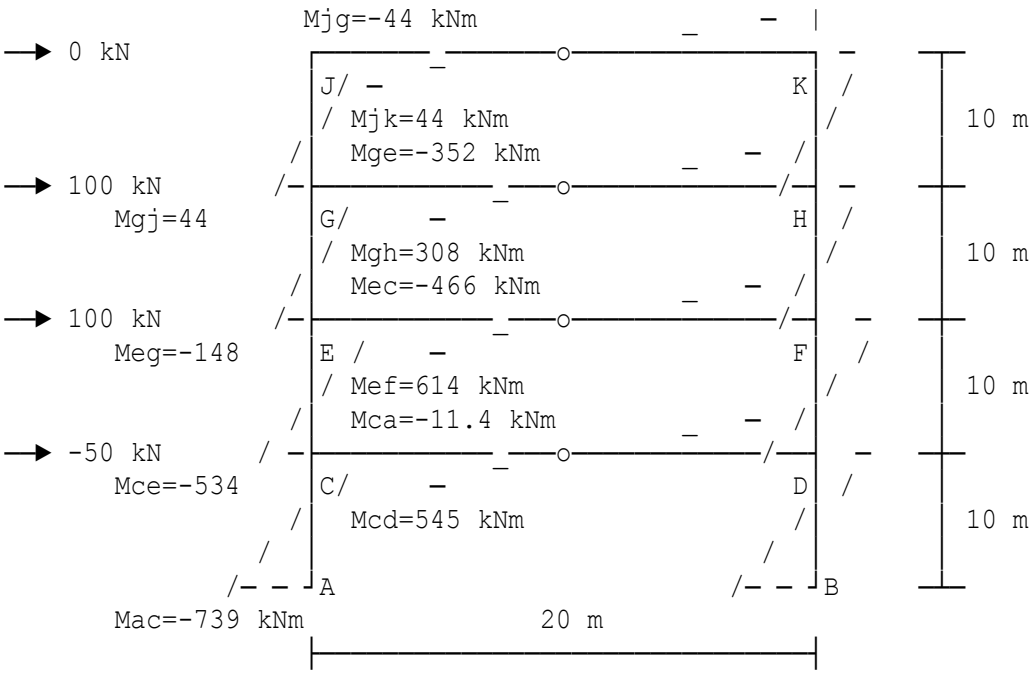

Location: Example of Vierendeel girders by Naylor's Method

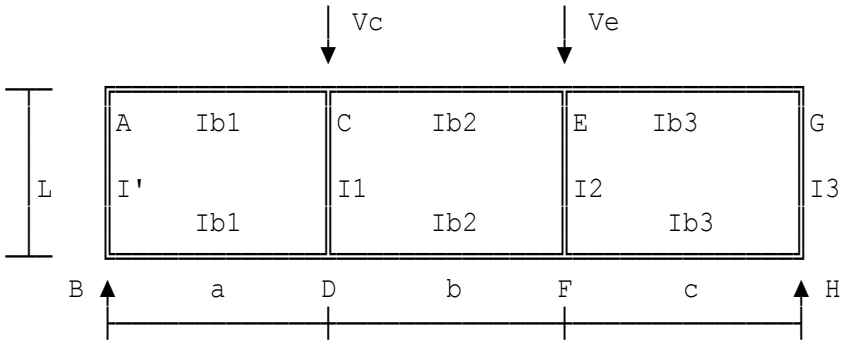

Inertia of column AB	I'=10 m⁴
Inertia of column CD	I1=10 m⁴
Inertia of column EF	I2=10 m⁴
Inertia of column GH	I3=10 m⁴
Vertical force at C	Vc=100 kN
Vertical force at E	Ve=50 kN
Height of Vierendeel girder	L=10 m
Width of bay B → D	a=10 m
Width of bay D → F	b=10 m
Width of bay F → H	c=10 m
Inertia of beams in bay B → D	Ib1=10 m⁴
Inertia of beams in bay D → F	Ib2=10 m⁴
Inertia of beams in bay F → H	Ib3=10 m⁴

Moment distribution:

	A		C			E			G	
Distribution factors:	0.857	0.143	0.125	0.75	0.125	0.125	0.75	0.125	0.143	0.857
Fixed end moments:	0	-208	-208	0	41.7	41.7	0	167	167	0

D denotes distributed moments — 1st line of each pair is column moment
C denotes carry over moments F denotes final moments

D	179		125			-156			-143	
D		29.8		20.8	20.8		-26	-26		-23.8
C		-20.8		-29.8	26		-20.8	23.8		26
D	17.9		2.79			-2.23			-22.3	
D		2.98		0.465	0.465		-0.372	-0.372		-3.72
C		-0.465		-2.98	0.372		-0.465	3.72		0.372
D	0.399		1.95			-2.44			-0.319	
D		0		0.326	0.326		-0.407	-0.407		0
C		-0.326		0	0.407		-0.326	0		0.407
D	0.279		-0.255			0			-0.349	
D		0		0	0		0	0		0
C		0		0	0		0	0		0
F	197		130			-161			-166	
F		-197		-220	90.1		-6.72	168		166

Location: Example using notation of Arthur Morley

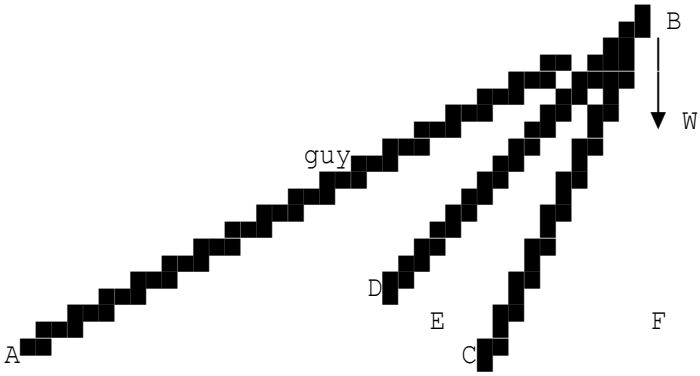

DB & CB are shear legs.

F is vertically below B
E is at centre of DC.

```
Weight supported by shear legs    W=5000 kN
Length of each shear leg          L=8 m
Distance between leg supports     dc=5 m
Horizontal distance between A & E ae=10 m
Horizontal distance between E & F ef=3 m
Distance between B & E            be=SQR(L^2-(dc/2)^2)=7.5993 m
Vertical distance between B & F   bf=SQR(be^2-ef^2)=6.9821 m
Distance between A & F            af=ae+ef=13 m
Length of guy                     ab=SQR(af^2+bf^2)=14.756 m
Angle of guy with ground          alpha=ATN(bf/af)=0.49287 rad
                                  alpha'=DEG(alpha)=28.24°
Angle of BE with ground           beta=ATN(bf/ef)=1.165 rad
                                  beta'=DEG(beta)=66.748°
Tension in guy AB  T=W/(SIN(alpha)-COS(alpha)*SIN(beta)/COS(beta))
                    =-3170.2 kN
Compression in shear legs         C=-T*COS(alpha)/COS(beta)/(2*be/L)
                                   =3723.8 kN
```

Location: Ex1 - Rectangular pinned base portal – after Kleinlogel

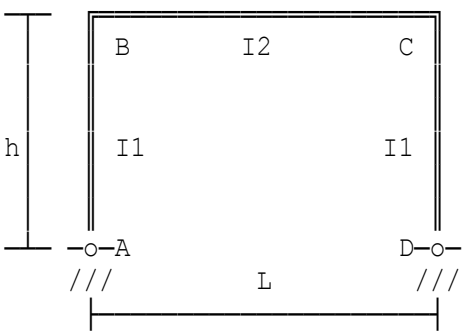

Sign conventions:

The direction of the load is considered to be positive.

The moments causing tension on the inside faces of the frame are considered to be positive. Upward vertical and inward horizontal reactions are positive.

Height of portal	h=4.88 m
Length of portal	L=9.75 m
Inertia of columns	I1=1 m^4
Inertia of beam	I2=1 m^4
Uniformly distributed load	w=2.05 kN/m
Moment at B	Mb=(w*h^2/4)*(-k/(2*N)+1)=11.441 kNm
Moment at C	Mc=(w*h^2/4)*(-k/(2*N)-1)=-12.968 kNm
Vertical reaction at A	Va=-w*h^2/(2*L)=-2.5036 kN
Vertical reaction at D	Vd=-Va=2.5036 kN
Horizontal reaction at D	Hd=-Mc/h=2.6574 kN
Horizontal reaction at A	Ha=-(w*h-Hd)=-7.3466 kN

Copyright 1986-2024 Fitzroy Systems Ltd.

Location: Ridged pinned base portal – after Kleinlogel

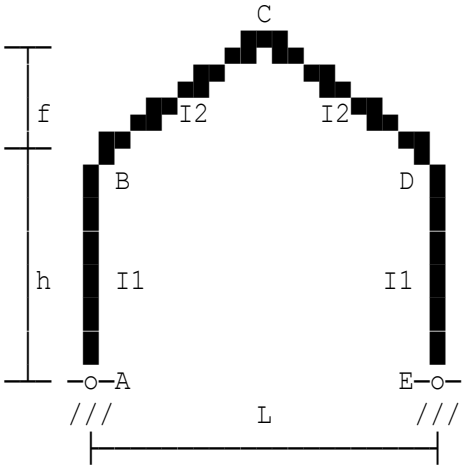

Sign conventions:

The direction of the load is considered to be positive.

The moments causing tension on the inside faces of the frame are considered to be positive. Upward vertical and inward horizontal reactions are positive.

Height to eaves	h=4.88 m
Height eaves to ridge	f=1.6 m
Span of portal	L=9.75 m
Inertia of columns	I1=1 m^4
Inertia of rafters	I2=1 m^4
Uniformly distributed load	w=2.05 kN/m
Moment at D	Md=-w*h^2*(2*(B+C)+k)/(8*N)=-11.33 kNm
Moment at B	Mb=w*h^2/2+Md=13.08 kNm
Moment at C	Mc=w*h^2/4+m*Md=-2.8396 kNm
Vertical reaction at A	Va=-w*h^2/(2*L)=-2.5036 kN
Vertical reaction at E	Ve=-Va=2.5036 kN
Horizontal reaction at E	He=-Md/h=2.3217 kN
Horizontal reaction at A	Ha=-(w*h-He)=-7.6823 kN

Location: Two bay ridged pinned base portal

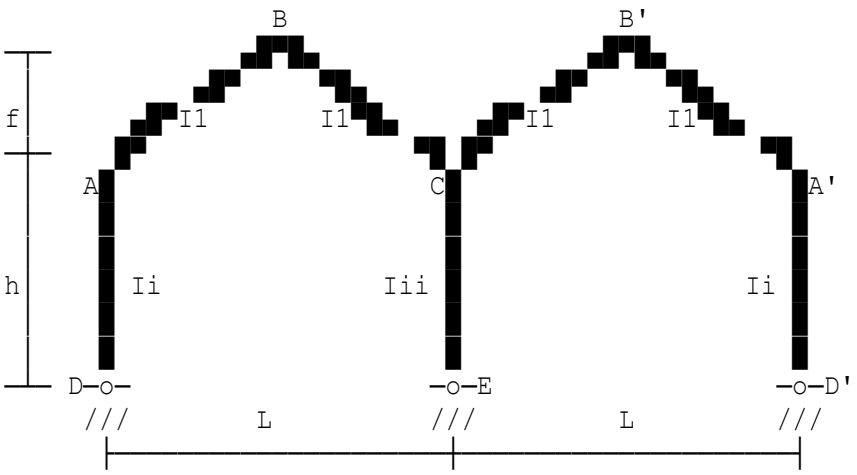

I1 = inertia of rafters

Ii = inertia of outside columns

Iii= inertia of central column

Side uniformly distributed load w=2.05 kN/m
Moment at A Ma=w*h^2*xi*(-n11-n)/4+w*h^2*(y11 +y13)/2=8.739 kNm
Moment at A' M'a=w*h^2*xi*(-n11+n)/4+w*h^2*(y11 -y13)/2=-6.6323 kN
Moment at C in L.H. rafter Mc1=w*h^2*xi*(n12-n)/4+w*h^2*(y12 -y14)/2=-2.3038 kNm
Moment at C in R.H. rafter Mc2=w*h^2*xi*(n12+n)/4+w*h^2*(y12 +y14)/2=6.7347 kNm
Moment at B Mb=-w*h^2*phi/2+(Ma*(1+2*phi)+Mc1)/2 =-1.9203 kNm
Moment at B' M'b=(Mc2+M'a*(1+2*phi))/2=-2.1233 kNm
Moment at C in centre column Mcii=Mc1-Mc2=-9.0385 kNm
V1=(-Ma+Mc1)/L=-1.1326 kN
V2=(-Mc2+M'a)/L=-1.371 kN
Vertical reaction at D Vd=V1=-1.1326 kN
Vc2=V2=-1.371 kN
Vc1=-V1=1.1326 kN
Vertical reaction at E Ve=Vc1+Vc2=-0.23838 kN
Vertical reaction at D' V'd=-V2=1.371 kN
Horizontal reaction at D Hd=Ma/h+w*h/2=6.7928 kN
Horizontal reaction at E He=Mcii/h=-1.8521 kN
Horizontal reaction at D' H'd=M'a/h=-1.3591 kN
Shear forces in the rafters (numbered from left to right):
First rafter T1=V1*costhe+(Hd-w*h)*sinthe =-2.0775 kN
Second rafter T'1=V1*costhe-(Hd-w*h)*sinthe =-0.074736 kN
Third rafter T2=V2*costhe+H'd*sinthe=-1.7264 kN
Fourth rafter T'2=V2*costhe-H'd*sinthe=-0.8788 kN
Axial thrusts in the rafters (numbered from left to right):
First rafter N1=V1*sinthe-(Hd-w*h)*costhe=2.6979 kN
Second rafter N'1=-V1*sinthe-(Hd-w*h)*costhe =3.4043 kN
Third rafter N2=V2*sinthe-H'd*costhe=0.86378 kN

Fourth rafter N'2=-V2*sinthe-H'd*costhe=1.7188 kN

Location: Couple roof by Kleinlogel

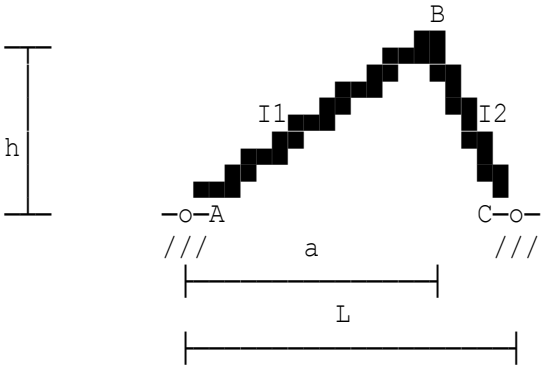

Sign conventions:

The direction of the load is considered to be positive.

The moments causing tension on the inside faces of the frame are considered to be positive.

Upward vertical and inward horizontal reactions are positive.

Height to ridge	h=5.6 m
Length of couple roof	L=9.75 m
Horizontal length A to B	a=6.75 m
Inertia of left rafter	I1=0.1E-3 m⁴
Inertia of right rafter	I2=0.2E-3 m⁴

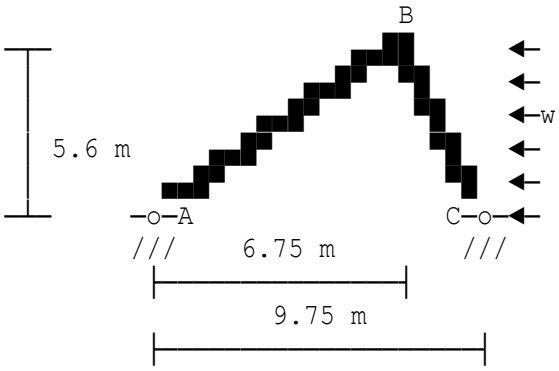

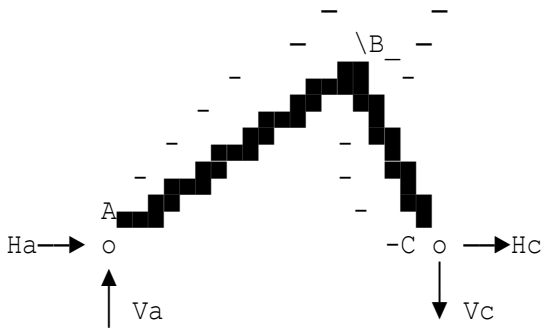

Uniformly distributed load	w=4 kN/m
Moment at B	Mb=-w*h^2*k/(8*N)=-4.169 kNm
Vertical reaction at A	Va=w*h^2/(2*L)=6.4328 kN
Vertical reaction at C	Vc=-Va=-6.4328 kN
Horizontal reaction at A	Ha=w*h*a1/2-Mb/h=8.4983 kN
Horizontal reaction at C	Hc=-(w*h-Ha)=-13.902 kN

Location: Circular arch – after Roark (Fourth Edition)

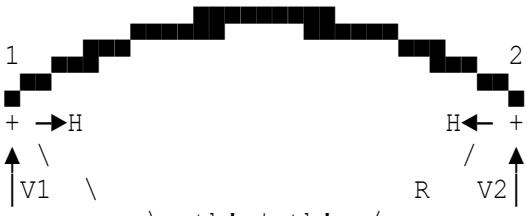

O is centre of circle of radius R, of which arch is a segment

th' is angle (degrees) subtended by half arch segment

R = radius of arch segment i.e. distance between centre O and support points 1 & 2

Forces are positive when as shown in the diagrams.

Elastic modulus of elasticity	E=9E6 kN/m²
Area of X section of arch	A=1.44 m²
Moment of inertia of arch X sectn	I=0.1728 m⁴
Radius of arch	R=15 m
Angle	th'=40°
Point load	W=20 kN
Angle	phi'=15°
Horizontal force	H=nu/de=16.748 kN
Vertical reaction	V1=0.5*W*(s+n)/s=14.027 kN
Vertical reaction	V2=W-V1=5.9735 kN

Location: Example on page 386 of Designer's Handbook

Analysis of helical stair with fixed supports

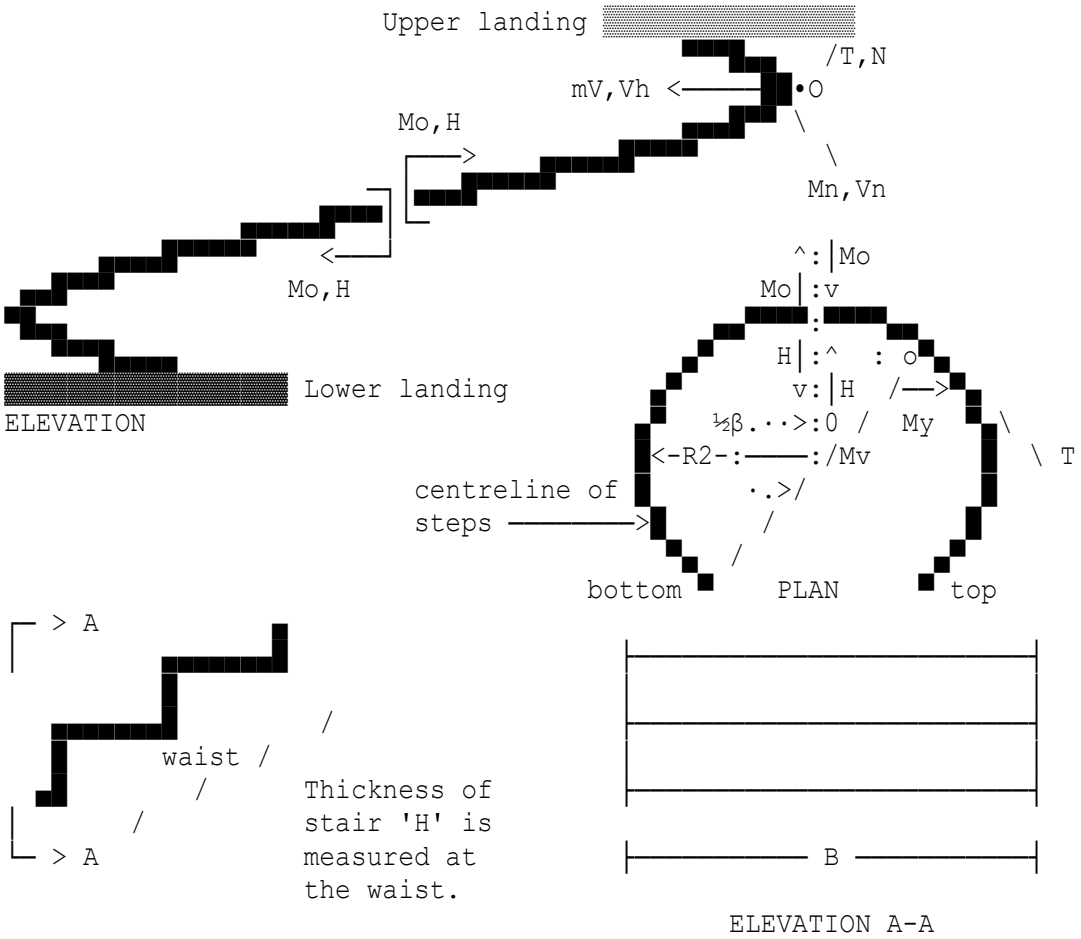

Breadth of stair	B=1200 mm
Thickness of stair	H=120 mm
Dead load partial safety factor	gf=1.4
Imposed-load safety factor	qf=1.6

Summary of analysis

Angle deg.	Mv kNm	Mh kNm	Mt kNm	Vv kN	Vh kN	Hh kN
-120	-10.33	47.95	-0.5821	-31.67	-16.82	46.91
-60	1.136	48.19	-0.0665	-9.676	16.82	36.66
0	-3.803	0	0	0	33.64	0
60	1.136	-48.19	0.0665	9.676	16.82	-36.66
120	-10.33	-47.95	0.5821	31.67	-16.82	-46.91

Location: Stair turning through more than a complete circle

Analysis of helical stair with fixed supports

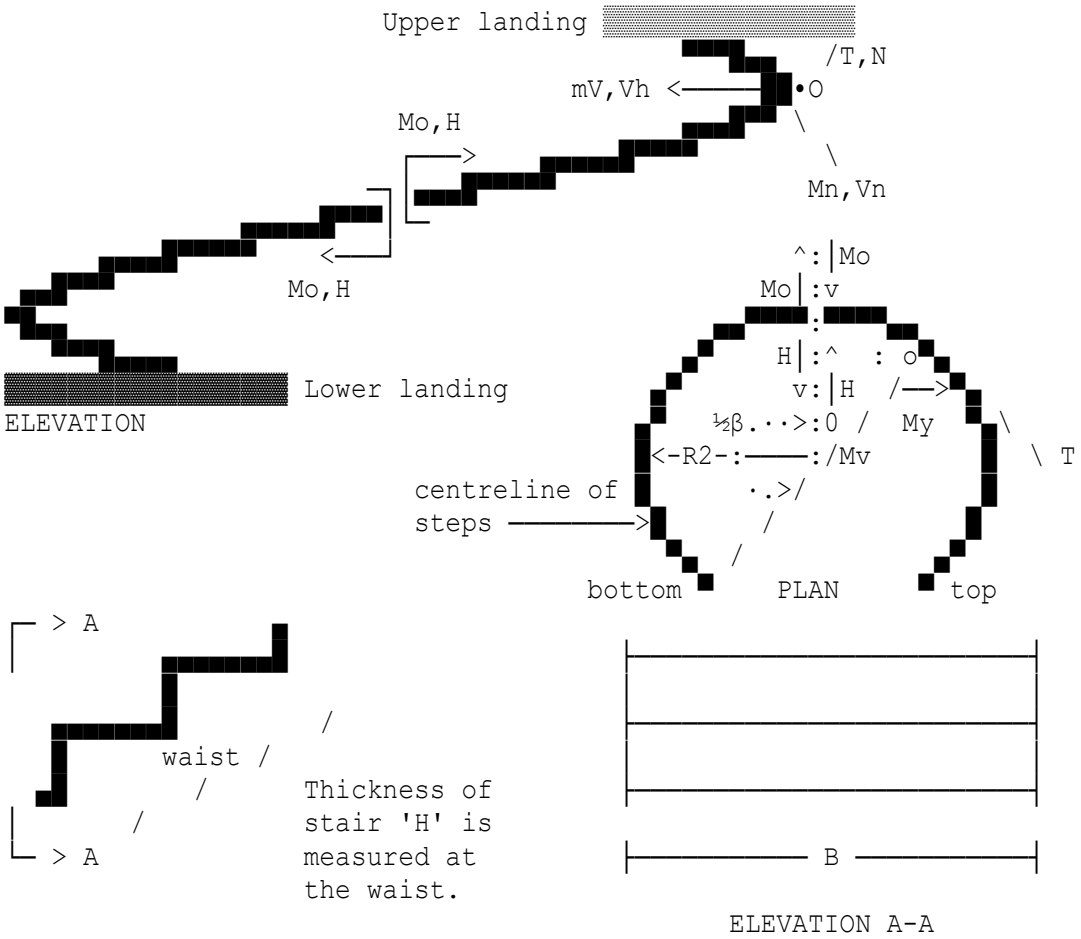

Breadth of stair	B=1500 mm
Thickness of stair	H=150 mm
Dead load partial safety factor	gf=1.4
Imposed-load safety factor	qf=1.6

Summary of analysis

Angle deg.	Mv kNm	Mh kNm	Mt kNm	Vv kN	Vh kN	Hh kN
-225	-231	-48.36	121.4	-155.8	-53.46	10.83
-175	-50.96	18.95	14.21	-101.6	-75.31	52.43
-125	37.47	127.9	20.93	-49.26	-43.36	89.72
-75	4.389	160.7	46.85	-14.97	19.57	86.6
-25	-61.01	72.63	25.66	-1.896	68.52	35.82
25	-61.01	-72.63	-25.66	1.896	68.52	-35.82
75	4.389	-160.7	-46.85	14.97	19.57	-86.6
125	37.47	-127.9	-20.93	49.26	-43.36	-89.72
175	-50.96	-18.95	-14.21	101.6	-75.31	-52.43
225	-231	48.36	-121.4	155.8	-53.46	-10.83

Location: Steep narrow semi-circular stairway

Analysis of helical stair with fixed supports

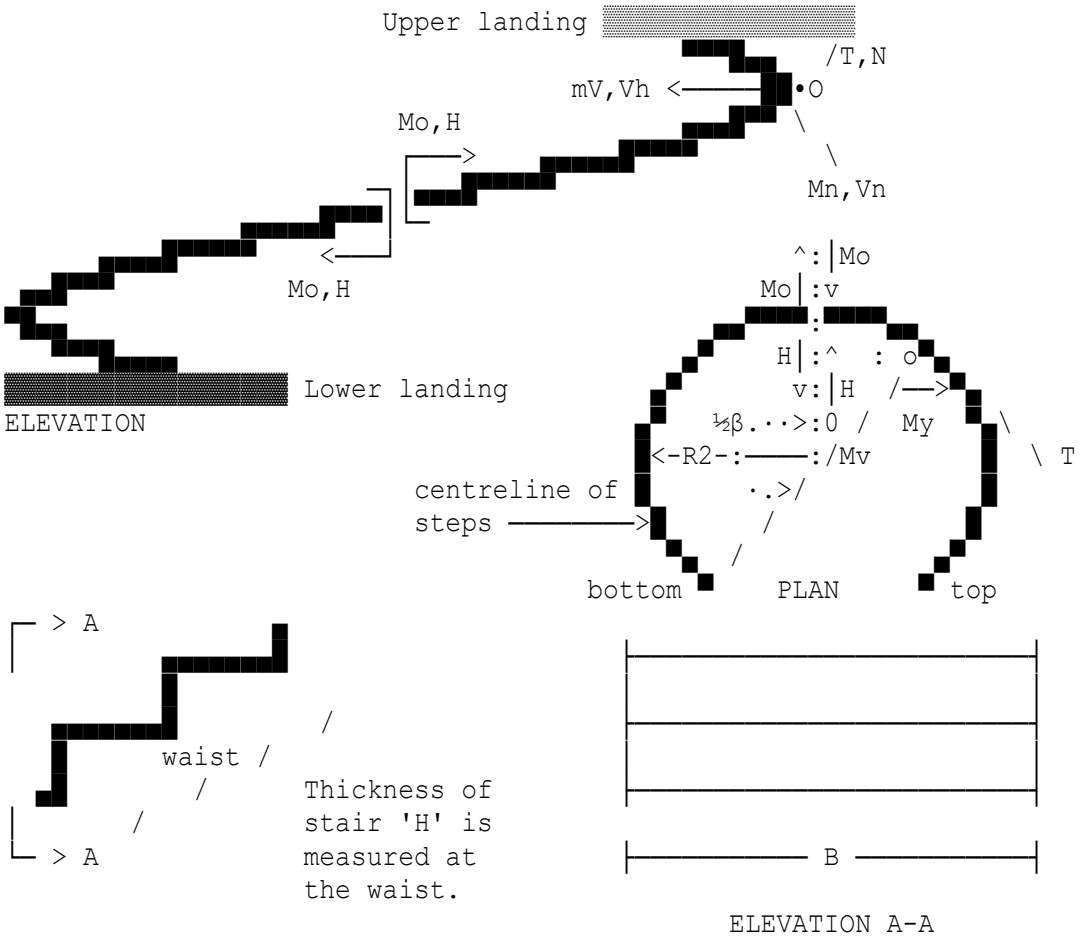

Breadth of stair	B=1000 mm
Thickness of stair	H=135 mm
Dead load partial safety factor	gf=1.4
Imposed-load safety factor	qf=1.6

Summary of analysis

Angle deg.	Mv kNm	Mh kNm	Mt kNm	Vv kN	Vh kN	Hh kN
-90	-2.408	20.44	-0.8511	-14.15	0	28.41
-45	-0.3564	14.5	-0.5159	-5.28	13.04	17.58
0	-0.8282	0	0	0	18.45	0
45	-0.3564	-14.5	0.5159	5.28	13.04	-17.58
90	-2.408	-20.44	0.8511	14.15	0	-28.41

Location: Example on page 386 of Designer's Handbook

Analysis of helical stair with fixed supports

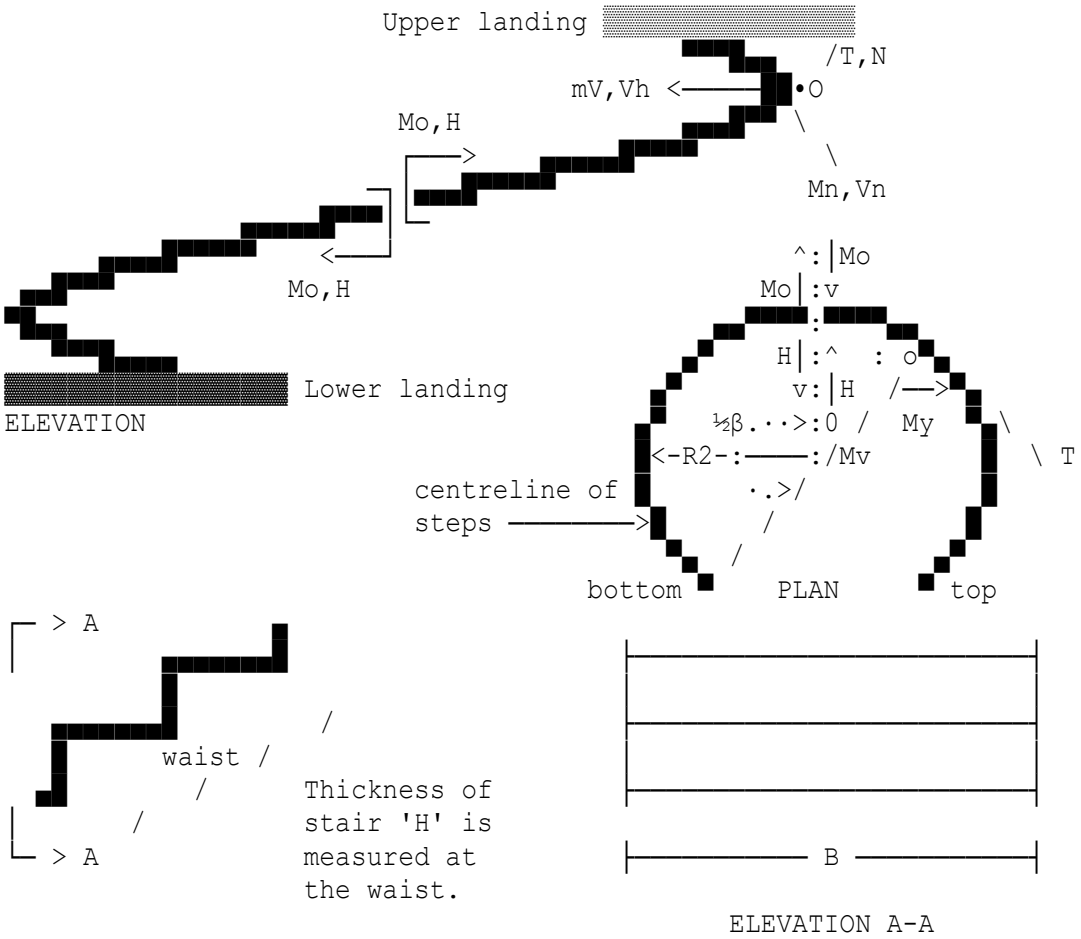

Breadth of stair	B=1200 mm
Thickness of stair	H=120 mm
Perm load partial safety factor	gamG=1.35
Variable load safety factor	gamQ=1.5

Summary of analysis

Angle deg.	Mv kNm	Mh kNm	Mt kNm	Vv kN	Vh kN	Hh kN
-120	-9.851	45.73	-0.5552	-30.2	-16.04	44.74
-60	1.083	45.96	-0.0634	-9.229	16.04	34.96
0	-3.627	0	0	0	32.09	0
60	1.083	-45.96	0.0634	9.229	16.04	-34.96
120	-9.851	-45.73	0.5552	30.2	-16.04	-44.74

Location: Stair turning through more than a complete circle

Analysis of helical stair with fixed supports

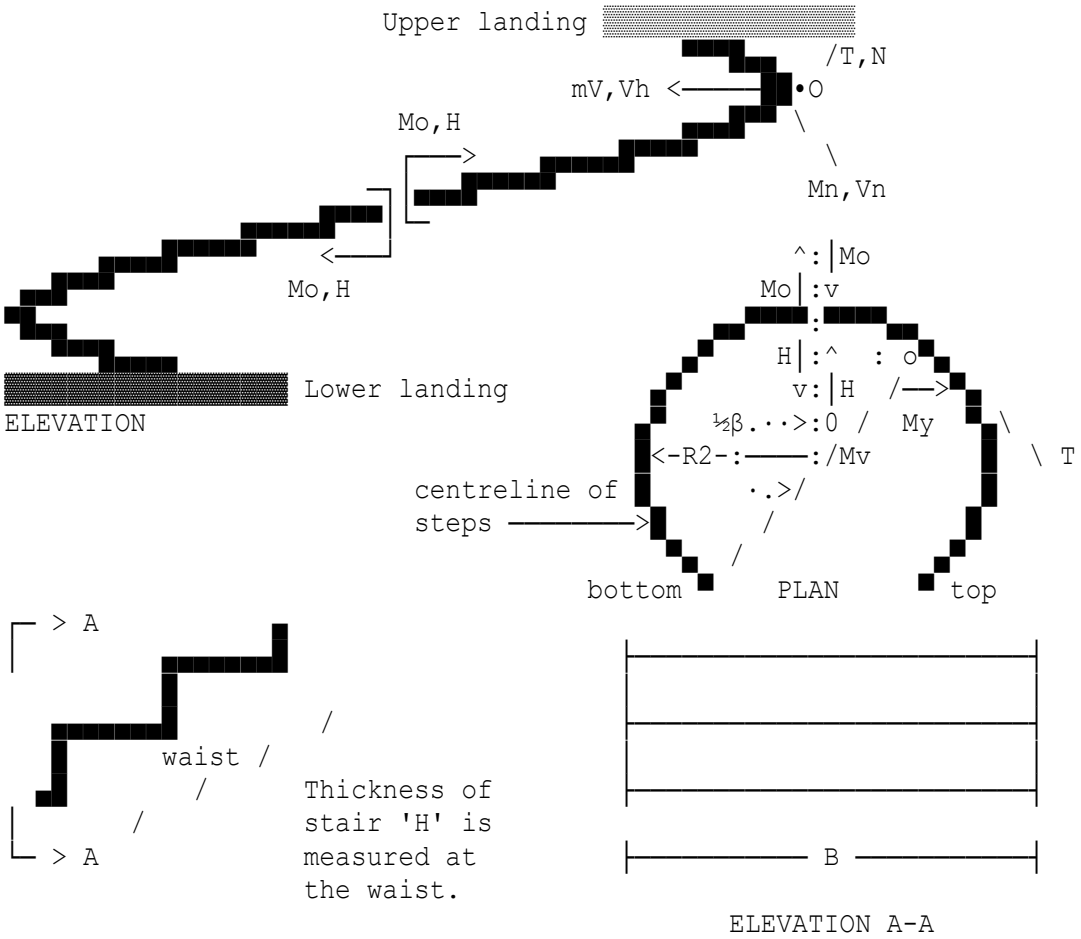

Breadth of stair	B=1500 mm
Thickness of stair	H=150 mm
Perm load partial safety factor	gamG=1.35
Variable load safety factor	gamQ=1.5

Summary of analysis

Angle deg.	Mv kNm	Mh kNm	Mt kNm	Vv kN	Vh kN	Hh kN
-225	-220.5	-46.17	115.9	-148.7	-51.04	10.34
-175	-48.65	18.09	13.56	-96.95	-71.9	50.05
-125	35.77	122.2	19.99	-47.03	-41.4	85.66
-75	4.19	153.5	44.73	-14.29	18.68	82.68
-25	-58.24	69.34	24.5	-1.81	65.41	34.19
25	-58.24	-69.34	-24.5	1.81	65.41	-34.19
75	4.19	-153.5	-44.73	14.29	18.68	-82.68
125	35.77	-122.2	-19.99	47.03	-41.4	-85.66
175	-48.65	-18.09	-13.56	96.95	-71.9	-50.05
225	-220.5	46.17	-115.9	148.7	-51.04	-10.34

Location: Steep narrow semi-circular stairway

Analysis of helical stair with fixed supports

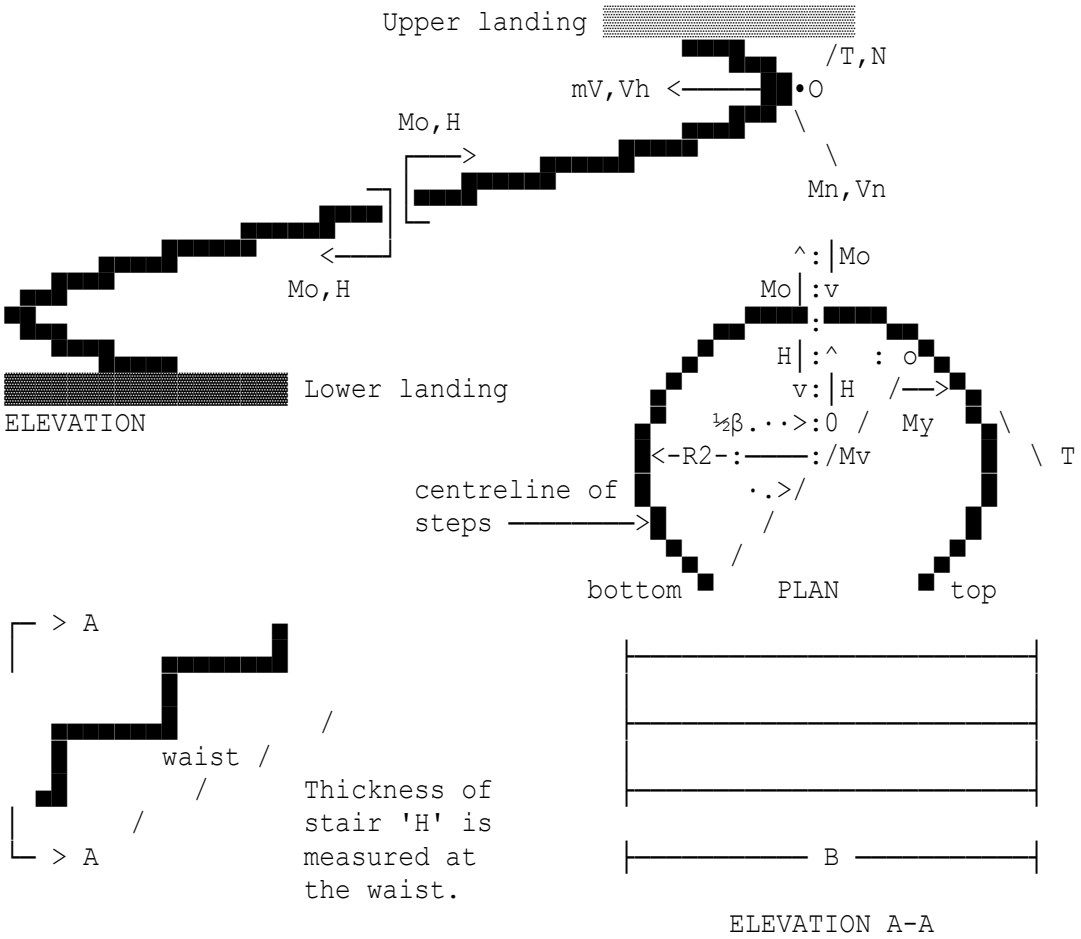

Breadth of stair	B=1000 mm
Thickness of stair	H=135 mm
Perm load partial safety factor	gamG=1.35
Variable load safety factor	gamQ=1.5

Summary of analysis

Angle deg.	Mv kNm	Mh kNm	Mt kNm	Vv kN	Vh kN	Hh kN
-90	-2.292	19.45	-0.8099	-13.46	0	27.04
-45	-0.3391	13.8	-0.491	-5.025	12.41	16.73
0	-0.7881	0	0	0	17.55	0
45	-0.3391	-13.8	0.491	5.025	12.41	-16.73
90	-2.292	-19.45	0.8099	13.46	0	-27.04

Location: Beams of relatively great depth – after Roark

In beams of small span/depth ratio, the shear stresses are likely to be high, and the deflection due to shear must be added to the deflection due to bending. Roark gives expressions for computing the deflection due to shear for common cases of loading.

For extremely short beams (span/depth ratios < 3), the assumption of linear stress distribution on which the simple theory of flexure is based is no longer valid. Actual extreme fibre stresses, and horizontal shear stresses are significantly higher than those computed by the simple theory. Roark gives a table of values by which stresses from the simple theory must be multiplied to obtain values found from strain-gauge measurements and photoelastic studies, and these values are used below.

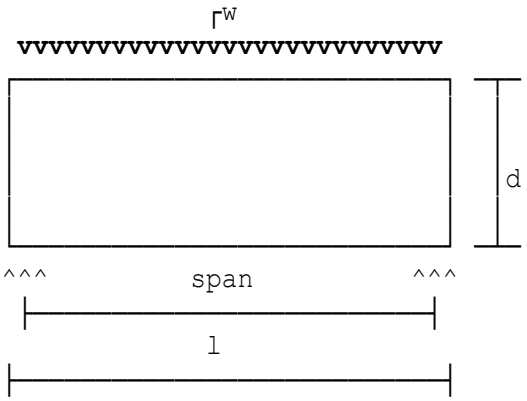

Beams of relatively great depth

Uniform load over entire length

Span taken as length of beam
x 23/24 as assumed by Roark

Uniformly distributed load	w=200 kN/m
Elastic modulus	E=9E6 kN/m²
Shearing modulus	G=562500 kN/m²
Depth of beam	d=1 m
Length of beam	l=3 m
Thickness of beam	t=0.4 m
Span of beam	span=l*23/24=2.875 m
Span:depth ratio	s'd=span/d=2.875
Total load on beam	W=w*l=600 kN
End shears	V=W/2=300 kN
Maximum bending moment	M=W*span/8=215.63 kNm
Total deflection	y=yb+ys=0.0017688 m

Location: Roof trusses – after Dorman Long Handbook 1964

Span of truss L=10 m
UDL on plan w1=3 kN/m
UDL suction on L.H. rafter w2=1.5 kN/m

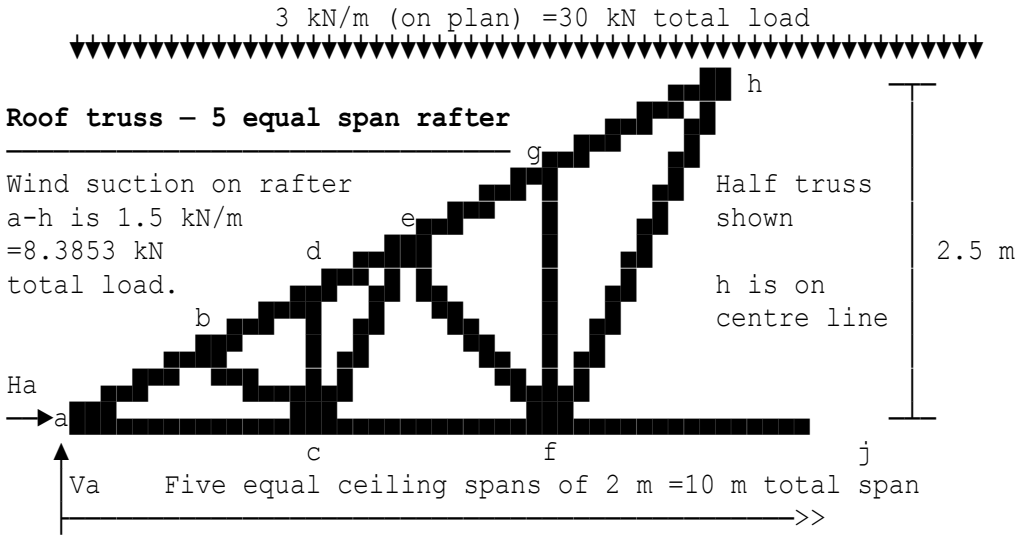

Forces due to plan loading (positive indicates compression)
Force in member a-b fab=1.006*W1=30.18 kN
Force in member b-d fbd=0.894*W1=26.82 kN
Force in member d-e fde=0.894*W1=26.82 kN
Force in member e-g feg=0.671*W1=20.13 kN
Force in member g-h fgh=0.671*W1=20.13 kN
Force in member a-c fac=(-0.9)*W1=-27 kN
Force in member c-f fcf=(-0.7)*W1=-21 kN
Force in member f-j ffj=(-0.5)*W1=-15 kN
Force in member b-c fbc=0.112*W1=3.36 kN
Force in member c-d fcd=0.100*W1=3 kN
Force in member e-f fef=0.180*W1=5.4 kN
Force in member f-g ffg=0.100*W1=3 kN
Force in member c-e fce=(-0.18)*W1=-5.4 kN
Force in member f-h ffh=(-0.269)*W1=-8.07 kN
Vertical reaction at both ends fvb=0.5*W1=15 kN
Horizontal reaction at both ends fhb=0.0*W1=0 kN
Forces due to wind suction on L.H. rafter (+ve indicates compression)
Force in member a-b fab=(-1.175)*W2=-9.8527 kN
Force in member b-d fbd=(-1.025)*W2=-8.5949 kN
Force in member d-e fde=(-1.125)*W2=-9.4334 kN
Force in member e-g feg=(-0.725)*W2=-6.0793 kN
Force in member g-h fgh=(-0.825)*W2=-6.9178 kN
Force in member a-c fac=1.230*W2=10.314 kN
Force in member c-f fcf=0.783*W2=6.5657 kN
Force in member f-j ffj=0.335*W2=2.8091 kN
Force in member b-c fbc=(-0.250)*W2=-2.0963 kN
Force in member c-d fcd=(-0.224)*W2=-1.8783 kN
Force in member e-f fef=(-0.403)*W2=-3.3793 kN
Force in member f-g ffg=(-0.224)*W2=-1.8783 kN
Force in member c-e fce=0.403*W2=3.3793 kN

Force in member f-h	ffh=0.602*W2=5.0479 kN
Vertical reaction at a	fva=(-0.615)*W2=-5.1569 kN
Vertical reaction at other end	fvo=(-0.280)*W2=-2.3479 kN
Horizontal reaction at both ends	fhb=0.224*W2=1.8783 kN

Depth of section	h=1.0361 m
Breadth of section	b=0.3085 m
Web thickness	tw=0.03 m
Flange thickness	tf=0.0541 m
Root radius	r=0.03 m
Axial force at ULS	NEd=7903 kN
Bending moment about major axis	MyEd=2958 kNm
Bending moment about minor axis	MzEd=354 kNm

Depth of section	h=0.127 m
Breadth of section	b=0.076 m
Web thickness	tw=0.004 m
Flange thickness	tf=0.0076 m
Root radius	r=0.0076 m
Axial force at ULS	NEd=208 kN
Bending moment about major axis	MyEd=10 kNm
Bending moment about minor axis	MzEd=2.8 kNm

Depth of section	h=0.5 m
Breadth of section	b=0.3 m
Wall thickness	t=0.02 m
Outside corner radius	R=0.025 m
Inside corner radius	r=0.02 m
Axial force	NEd=6353 kN
Bending moment about major axis	MyEd=208 kNm
Bending moment about minor axis	MzEd=145 kNm

Depth of section	h=0.05 m
Breadth of section	b=0.03 m
Wall thickness	t=0.0032 m
Outside corner radius	R=0.004 m
Inside corner radius	r=0.0032 m
Axial force	NEd=50 kN
Bending moment about major axis	MyEd=0.81 kNm
Bending moment about minor axis	MzEd=0.56 kNm

Diameter of section	d=0.508 m
Wall thickness	t=0.02 m
Axial force	NEd=3200 kN
Bending moment about major axis	MyEd=250 kNm
Bending moment about minor axis	MzEd=250 kNm

Diameter of section	d=0.0269 m
Wall thickness	t=0.0032 m
Axial force	NEd=15 kN
Bending moment about major axis	MyEd=0.2 kNm
Bending moment about minor axis	MzEd=0.2 kNm

Location: Plastic section properties for I section

Plastic section properties of I Section:

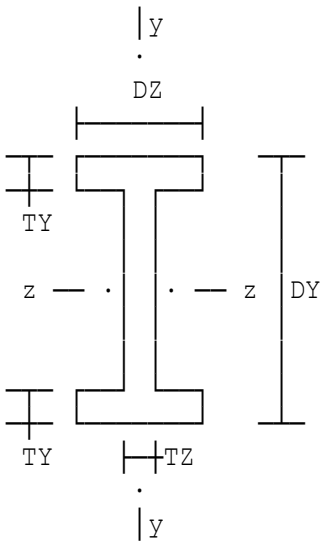

First moment of I Section about zz

$$= DZ.TY.(DY - TY) + \frac{(DY-2.TY)^2.TZ}{4}$$

First moment of I Section about yy

$$= \frac{2.DZ^2.TY}{4} + \frac{TZ^2.(DY-2TY)}{4}$$

$$= \frac{DZ^2.TY}{2} + \frac{(DY-2.TY).TZ^2}{4}$$

$$\text{Plastic torque constant} = DZ.TY^2 + \frac{DY.TZ^2}{2}$$

ref. Prof M.R.Horne

Depth of section	DY=200 mm
Width of section	DZ=100 mm
Thickness in y direction	TY=12 mm
Thickness in z direction	TZ=6 mm
First moment of area about zz	Szz=DZ*TY*(DY-TY)+(DY-2*TY)^2*TZ/4 =272064 mm³
First moment of area about yy	Syy=DZ^2*TY/2+(DY-2*TY)*TZ^2/4 =61584 mm³
Plastic torque constant	Sxx=DZ*TY^2+DY*TZ^2/2=18000 mm³

Location: Reduced plastic moment due to shear & thrust

Effect of simultaneous shear force and axial thrust on Mp, see Example 3.4. in "Plastic Design of Low-Rise Frames" by MR Horne & LJ Morris, Constrado Monographs, Published: Collins, London.

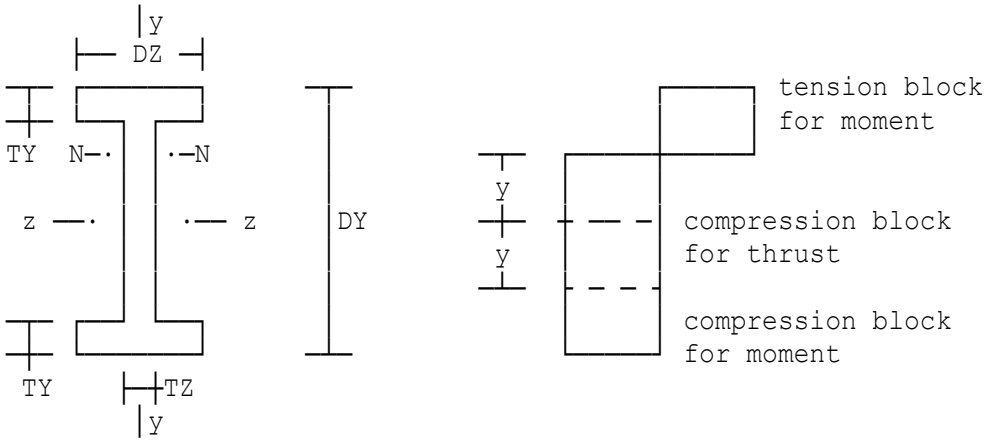

Depth of section DY=257.2 mm
Width of section DZ=101.9 mm
Thickness in y direction TY=8.4 mm
Thickness in z direction TZ=6 mm
Axial load fx=150 kN
Shear force fy=180 kN
Design strength of steel pv=240 N/mm²
Let neutral axis position for combined bending and axial thrust be at a distance 'y' from
centroidal axis zz, then: y=fx*1E3/(2*t'*pv)=84.608 mm
Reduction in plastic modulus due to thrust rpt=2*y^2*t'/4=13220 mm³
Hence reduced plastic modulus zpr=zpr-rpt=248287 mm³
Reduced plastic moment Mpr=zpr*pv/1E6=59.589 kNm

Location: Application of interaction formulae for I section

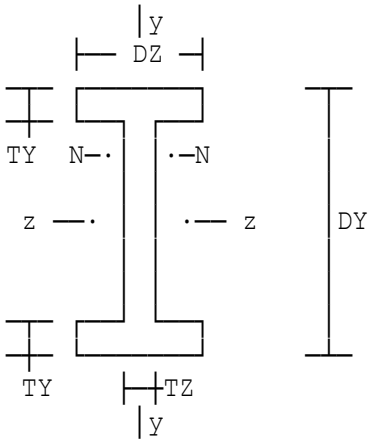

Mz = Major axis bending moment
Mzp = Major axis resistance moment

My = Minor axis bending moment
Myp = Minor axis resistance moment

Interaction formulae for I section subjected to axial load, twisting moment and bending about the Y & Z axes, ref. Prof. Michael R Horne.

Depth of section	DY=0.921 m
Width of section	DZ=0.4205 m
Flange thickness in y direction	TY=0.0366 m
Web thickness in z direction	TZ=0.0214 m
Axial load	Fx=2648 kN
Ultimate axial load	Fxp=11497 kN
Twisting moment	Mx=0.274 kNm
Plastic twisting moment	Mxp=105.04 kNm
Bending moment about minor axis	My=745.37 kNm
Ultimate BM about minor axis	Myp=783.23 kNm
Bending moment about major axis	Mz=223.71 kNm
Ultimate BM about major axis	Mzp=4151.3 kNm
For n ≤ alpha then major axis	Mpzp=t*Mzp*(1-n^2/(alpha*(2-alpha))) =3809 kNm
For n ≤ alpha then minor axis	Mpyp=t*Myp=783.23 kNm
Then with Mpzp and Mpyp use	Umrh=(Mz/Mpzp)^2+My/Mpyp=0.95511

Location: Plastic section properties for I section

Plastic section properties of I Section:

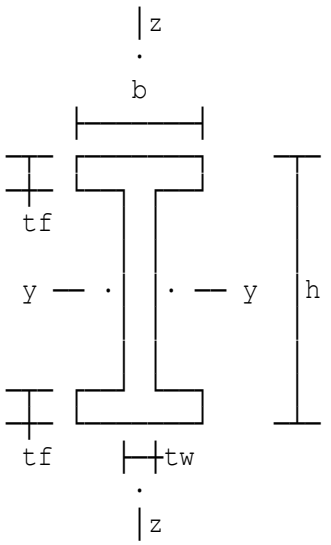

First moment of I Section about yy

$$= b.tf\ (h - tf) + \frac{(h-2.tf)^2.tw}{4}$$

First moment of I Section about zz

$$= \frac{2.b^2.tf}{4} + \frac{tw^2.(h-2.tf)}{4}$$

$$= \frac{b^2.tf}{2} + \frac{(h-2.tf).tw^2}{4}$$

$$\text{Plastic torque constant} = b.tf^2 + \frac{h.tw^2}{2}$$

ref. Prof M.R.Horne

Depth of section	h=200 mm
Width of section	b=100 mm
Thickness in z direction	tf=12 mm
Thickness in y direction	tw=6 mm
First moment of area about yy	Wply=b*tf*(h-tf)+(h-2*tf)^2*tw/4 =272064 mm³
First moment of area about zz	Wplz=b^2*tf/2+(h-2*tf)*tw^2/4 =61584 mm³
Plastic torque constant	Sxx=b*tf^2+h*tw^2/2=18000 mm³

Location: Reduced plastic moment due to shear & thrust

Effect of simultaneous shear force and axial thrust on Mp, see Example 3.4. in "Plastic Design of Low-Rise Frames" by MR Horne & LJ Morris, Constrado Monographs, Published: Collins, London.

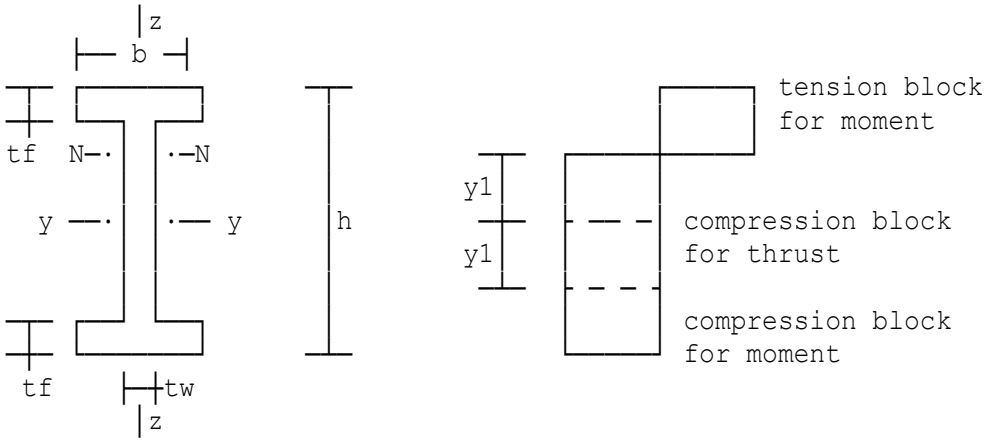

Depth of section	h=257.2 mm
Width of section	b=101.9 mm
Thickness in z direction	tf=8.4 mm
Thickness in y direction	tw=6 mm
Design axial load	NEd=150 kN
Design shear force (zz direction)	VzEd=180 kN
Design strength of steel	fy=240 N/mm²

Let neutral axis position for combined bending and axial thrust be at a distance 'y1' from
centroidal axis yy, then: y1=NEd*1E3/(2*t'*fy)=115.28 mm
Reduction in plastic modulus due to thrust rpt=2*y1^2*t'/4=18012 mm³
Hence reduced plastic modulus Wplr=Wplr-rpt=227242 mm³
Reduced plastic moment Mpr=Wplr*fy/1E6=54.538 kNm

Copyright 1986-2024 Fitzroy Systems Ltd.

Location: Application of interaction formulae for I section

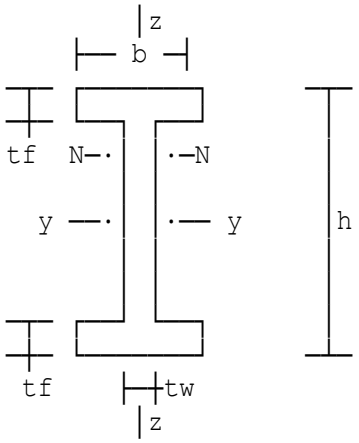

MyEd = Major axis bending moment
Myp = Major axis resistance moment

MzEd = Minor axis bending moment
Mzp = Minor axis resistance moment

Interaction formulae for I section subjected to axial load, twisting moment and bending about the Y & Z axes, ref. Prof. Michael R Horne.

Depth of section	h=0.921 m
Width of section	b=0.4205 m
Flange thickness in z direction	tf=0.0366 m
Web thickness in y direction	tw=0.0214 m
Design axial load	NEd=2648 kN
Ultimate axial load	NRd=11497 kN
Twisting moment	Mx=0.274 kNm
Plastic twisting moment	Mxp=105.04 kNm
Bending moment about zz axis	MzEd=745.37 kNm
Ultimate BM about zz axis	Mzp=783.23 kNm
Bending moment about yy axis	MyEd=223.71 kNm
Ultimate BM about yy axis	Myp=4151.3 kNm
For n ≤ alpha then major axis	Mpyp=t*Myp*(1-n^2/(alpha*(2-alpha))) =3809 kNm
For n ≤ alpha then minor axis	Mpzp=t*Mzp=783.23 kNm
Then with Mpyp and Mpzp use	Umrh=(MyEd/Mpyp)^2+MzEd/Mpzp=0.95511

Location: Properties of typical channel section

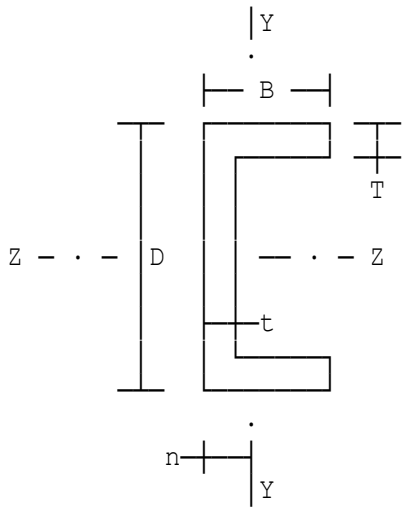

Sectional properties of channel

Depth of section	D=200 mm
Width of section	B=200 mm
Thickness of flanges	T=10 mm
Thickness of web	t=10 mm
Part area	az=2*B*T=4000 mm²
Part area	az'=(D-2*T)*t=1800 mm²
Area of section	AX=az+az'=5800 mm²
Shear area in Y-direction	AY=D*t=2000 mm²
Shear area in Z-direction	AZ=az*5/6=3333.3 mm²
Neutral-axis depth	n=(az*B/2+az'*t/2)/AX=70.517 mm
Inertia about YY-axis	IY=(D*n^3+2*T*(B-n)^3-(n-t)^3*(D-2 *T))/3=24.552E6 mm⁴
Inertia about ZZ-axis	IZ=B*D^3/12-(B-t)*(D-2*T)^3/12 =40.993E6 mm⁴
Torsional constant for flange	ix'=B*T^3*(1/3-0.21*T/B)=64567 mm⁴
Torsional constant for web	ix''=D*t^3*(1/3-0.21*t/D)=64567 mm⁴
Torsional constant for section	IX=2*ix'+ix''=193700 mm⁴

Location: Properties of typical I-beam

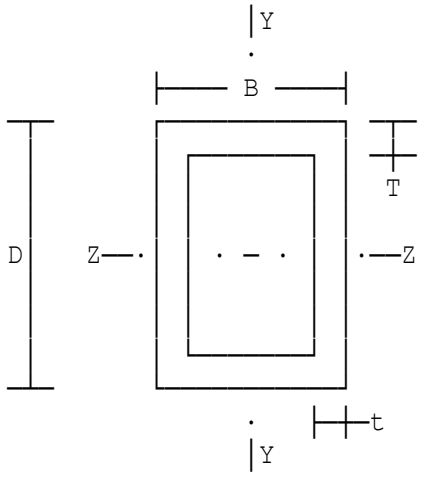

Sectional properties of RHS section

Depth of section D=200 mm
Width of section B=200 mm
Thickness in Y-direction T=10 mm
Thickness in Z-direction t=10 mm

compute D1=D-2*T=180 mm
compute D2=B-2*t=180 mm
Area of section AX=D*B-D1*D2=7600 mm²
Inertia about YY-axis IY=D*B^3/12-D1*D2^3/12=45.853E6 mm⁴
Inertia about ZZ-axis IZ=B*D^3/12-D2*D1^3/12=45.853E6 mm⁴
Torsion constant:
IX=2*T*t*(D-T)^2*(B-t)^2/(D*T+B*t-T^2-t^2)
=68.59E6 mm⁴
compute D2=D/2=100 mm
compute D1=D2-T=90 mm
Shape factor:
F=(1+3*(D2^2-D1^2)*D1/(2*D2^3)*(0.5*B/t-1))*(4*D2^2*AX)/(10*IZ)=2.1935
Shear area in Y-direction AY=AX/F=3464.8 mm²
compute D2=B/2=100 mm
compute D1=D2-t=90 mm
Shape factor:
F=(1+3*(D2^2-D1^2)*D1/(2*D2^3)*(0.5*D/T-1))*(4*D2^2*AX)/(10*IY)=2.1935
Shear area in Z-direction AZ=AX/F=3464.8 mm²

Location: Square solid section analysed using general method

Properties of a solid plane section

The section is defined by coordinates of corner points taken in anti-clockwise order round the section. The cross section is kept to the left of the edge running from a previous point to the next point. The section is closed when the original point is specified again.

Coordinates of points in order:

Point 1	: X-coordinate	x(1)=0 mm
	Y-coordinate	y(1)=0 mm
Point 2	: X-coordinate	x(2)=400 mm
	Y-coordinate	y(2)=0 mm
Point 3	: X-coordinate	x(3)=400 mm
	Y-coordinate	y(3)=400 mm
Point 4	: X-coordinate	x(4)=0 mm
	Y-coordinate	y(4)=400 mm
Point 5	: X-coordinate	x(5)=0 mm
	Y-coordinate	y(5)=0 mm

Cross-sectional area 160000 mm²

Second moments of area (inertias) Ixx=2.1333E9 mm⁴
Iyy=2.1333E9 mm⁴

Product of inertia $\int dA.xy$ Ixy=-1.9073E-6 mm⁴

Distance of centroid from origin X=200 mm
Y=200 mm

X and Y are principal axes.

Angle of rotation of section thetaD=45°

Second moments of area (inertia) about redefined axes:

Ix'=Ixx*(COS(thetaR))^2+Iyy*(SIN(thetaR))^2-Ixy*SIN(2*thetaR)
=2.1333E9 mm⁴

Iy'=Iyy*(COS(thetaR))^2+Ixx*(SIN(thetaR))^2+Ixy*SIN(2*thetaR)
=2.1333E9 mm⁴

Ixy'=(Ixx-Iyy)/2*SIN(2*thetaR)+Ixy*COS(2*thetaR)=-0.11679E-21 mm⁴

Plot of section

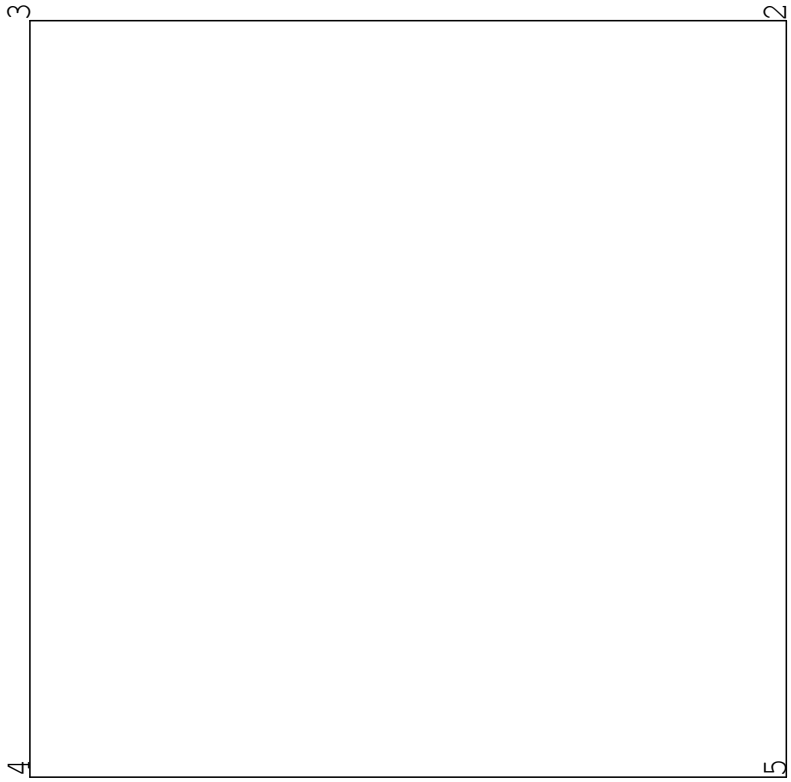

Location: Square box-section analysed using general method

Properties of a hollow plane section

The section is defined by coordinates of corner points taken in anti-clockwise order round the section. The cross section is kept to the left of the edge running from a previous point to the next point. The section is closed when the original point is specified again.

Coordinates of points in order:

Point 1	: X-coordinate	x(1)=0 mm
	Y-coordinate	y(1)=0 mm
Point 2	: X-coordinate	x(2)=400 mm
	Y-coordinate	y(2)=0 mm
Point 3	: X-coordinate	x(3)=400 mm
	Y-coordinate	y(3)=400 mm
Point 4	: X-coordinate	x(4)=0 mm
	Y-coordinate	y(4)=400 mm
Point 5	: X-coordinate	x(5)=0 mm
	Y-coordinate	y(5)=360 mm
Point 6	: X-coordinate	x(6)=360 mm
	Y-coordinate	y(6)=360 mm
Point 7	: X-coordinate	x(7)=360 mm
	Y-coordinate	y(7)=40 mm
Point 8	: X-coordinate	x(8)=40 mm
	Y-coordinate	y(8)=40 mm
Point 9	: X-coordinate	x(9)=40 mm
	Y-coordinate	y(9)=360 mm
Point 10	: X-coordinate	x(10)=0 mm
	Y-coordinate	y(10)=360 mm
Point 11	: X-coordinate	x(11)=0 mm
	Y-coordinate	y(11)=0 mm

Cross-sectional area 57600 mm²

Second moments of area (inertias) Ixx=1.2595E9 mm⁴
Iyy=1.2595E9 mm⁴

Product of inertia $\int dA.xy$ Ixy=-1.4305E-6 mm⁴

Distance of centroid from origin X=200 mm
Y=200 mm

X and Y are principal axes.

Angle of rotation of section thetaD=45°

Second moments of area (inertia) about redefined axes:
Ix'=Ixx*(COS(thetaR))^2+Iyy*(SIN(thetaR))^2-Ixy*SIN(2*thetaR)
=1.2595E9 mm⁴
Iy'=Iyy*(COS(thetaR))^2+Ixx*(SIN(thetaR))^2+Ixy*SIN(2*thetaR)
=1.2595E9 mm⁴
Ixy'=(Ixx-Iyy)/2*SIN(2*thetaR)+Ixy*COS(2*thetaR)=-87.594E-24 mm⁴

Plot of section

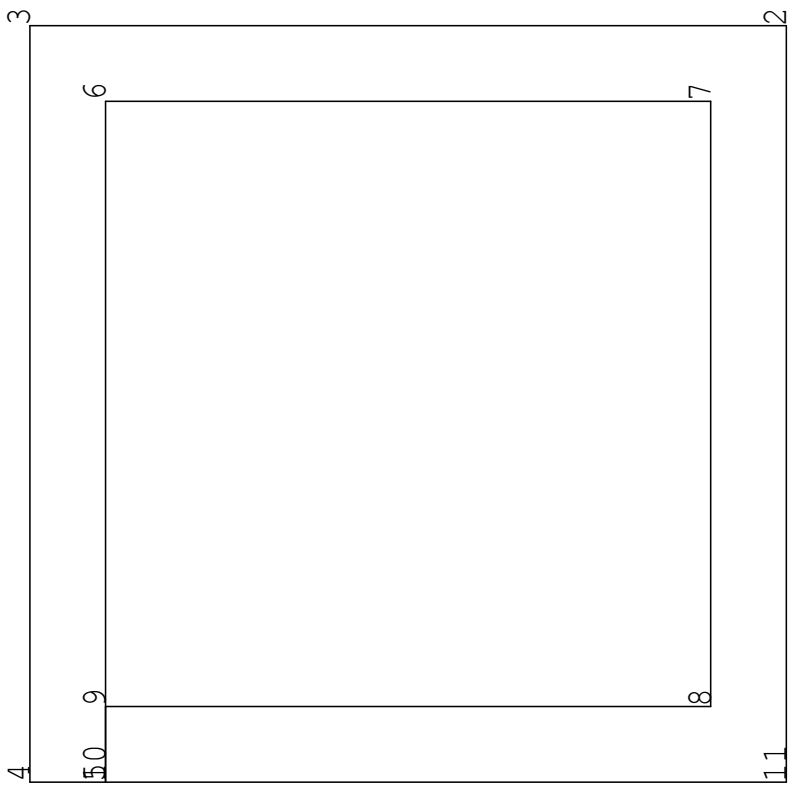

Location: Octagon with plus-shaped hole

Properties of a hollow plane section

The section is defined by coordinates of corner points taken in anti-clockwise order round the section. The cross section is kept to the left of the edge running from a previous point to the next point. The section is closed when the original point is specified again.

Coordinates of points in order:

Point 1	: X-coordinate	x(1)=1 mm
	Y-coordinate	y(1)=0 mm
Point 2	: X-coordinate	x(2)=4 mm
	Y-coordinate	y(2)=0 mm
Point 3	: X-coordinate	x(3)=5 mm
	Y-coordinate	y(3)=1 mm
Point 4	: X-coordinate	x(4)=5 mm
	Y-coordinate	y(4)=4 mm
Point 5	: X-coordinate	x(5)=4 mm
	Y-coordinate	y(5)=5 mm
Point 6	: X-coordinate	x(6)=1 mm
	Y-coordinate	y(6)=5 mm
Point 7	: X-coordinate	x(7)=0 mm
	Y-coordinate	y(7)=4 mm
Point 8	: X-coordinate	x(8)=0 mm
	Y-coordinate	y(8)=2 mm
Point 9	: X-coordinate	x(9)=1 mm
	Y-coordinate	y(9)=2 mm
Point 10	: X-coordinate	x(10)=1 mm
	Y-coordinate	y(10)=3 mm
Point 11	: X-coordinate	x(11)=2 mm
	Y-coordinate	y(11)=3 mm
Point 12	: X-coordinate	x(12)=2 mm
	Y-coordinate	y(12)=4 mm
Point 13	: X-coordinate	x(13)=3 mm
	Y-coordinate	y(13)=4 mm
Point 14	: X-coordinate	x(14)=3 mm
	Y-coordinate	y(14)=3 mm
Point 15	: X-coordinate	x(15)=4 mm
	Y-coordinate	y(15)=3 mm
Point 16	: X-coordinate	x(16)=4 mm
	Y-coordinate	y(16)=2 mm
Point 17	: X-coordinate	x(17)=3 mm
	Y-coordinate	y(17)=2 mm
Point 18	: X-coordinate	x(18)=3 mm
	Y-coordinate	y(18)=1 mm
Point 19	: X-coordinate	x(19)=2 mm
	Y-coordinate	y(19)=1 mm
Point 20	: X-coordinate	x(20)=2 mm
	Y-coordinate	y(20)=2 mm
Point 21	: X-coordinate	x(21)=0 mm
	Y-coordinate	y(21)=2 mm
Point 22	: X-coordinate	x(22)=0 mm
	Y-coordinate	y(22)=1 mm

Point 23 : X-coordinate x(23)=1 mm
Y-coordinate y(23)=0 mm

Cross-sectional area 18 mm^2

Second moments of area (inertias) Ixx=40.167 mm^4
Iyy=40.167 mm^4

Product of inertia $\int dA.xy$ Ixy=0 mm^4

Distance of centroid from origin X=2.5 mm
Y=2.5 mm

X and Y are principal axes.

Angle of rotation of section thetaD=45°

Second moments of area (inertia) about redefined axes:
Ix'=Ixx*(COS(thetaR))^2+Iyy*(SIN(thetaR))^2-Ixy*SIN(2*thetaR)
=40.167 mm^4
Iy'=Iyy*(COS(thetaR))^2+Ixx*(SIN(thetaR))^2+Ixy*SIN(2*thetaR)
=40.167 mm^4
Ixy'=(Ixx-Iyy)/2*SIN(2*thetaR)+Ixy*COS(2*thetaR)=7.1054E-15 mm^4

Plot of section

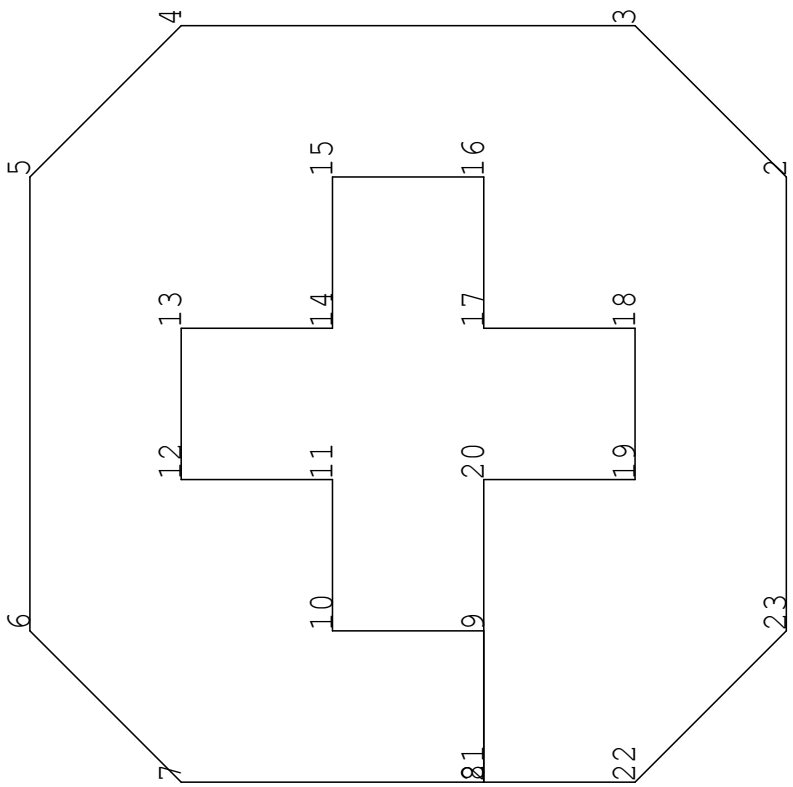

Location: Properties of typical channel section

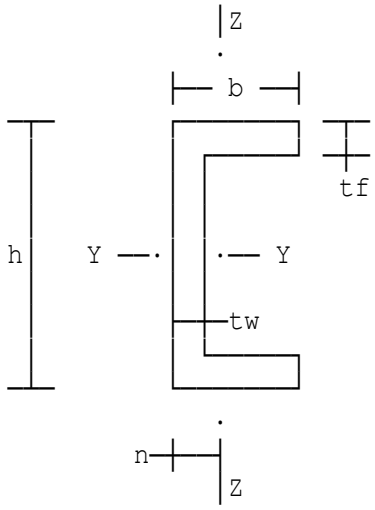

Sectional properties of channel

Depth of section	h=200 mm
Width of section	b=200 mm
Thickness of flanges	tf=10 mm
Thickness of web	tw=10 mm
Part area	az=2*b*tf=4000 mm²
Part area	az'=(h-2*tf)*tw=1800 mm²
Area of section	Ax=az+az'=5800 mm²
Shear area in z-direction	Az=h*tw=2000 mm²
Shear area in y-direction	Ay=az*5/6=3333.3 mm²
Neutral-axis depth	n=(az*b/2+az'*tw/2)/Ax=70.517 mm
Inertia about zz-axis	Iz=(h*n^3+2*tf*(b-n)^3-(n-tw)^3*(h-2*tf))/3=24.552E6 mm⁴
Inertia about yy-axis	Iy=b*h^3/12-(b-tw)*(h-2*tf)^3/12 =40.993E6 mm⁴
Torsional constant for flange	it1=b*tf^3*(1/3-0.21*tf/b)=64567 mm⁴
Torsional constant for web	it2=h*tw^3*(1/3-0.21*tw/h)=64567 mm⁴
Torsional constant for section	It=2*it1+it2=193700 mm⁴

Location: Properties of typical I-beam

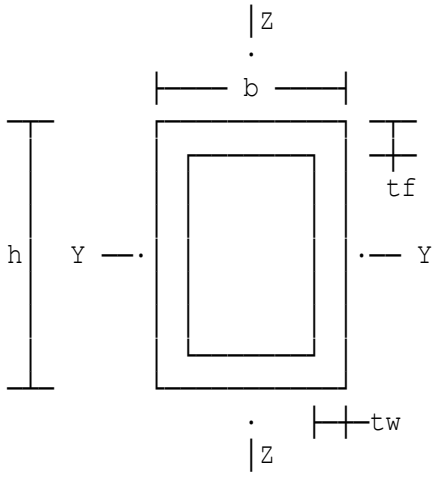

Sectional properties of RHS section

Depth of section h=200 mm
Width of section b=200 mm
Thickness in z-direction tf=10 mm
Thickness in y-direction tw=10 mm

compute D1=h-2*tf=180 mm
compute D2=b-2*tw=180 mm
Area of section Ax=h*b-D1*D2=7600 mm²
Inertia about zz-axis Iz=h*b^3/12-D1*D2^3/12=45.853E6 mm⁴
Inertia about yy-axis Iy=b*h^3/12-D2*D1^3/12=45.853E6 mm⁴
Torsion constant:
It=2*tf*tw*(h-tf)^2*(b-tw)^2/(h*tf+b*tw-tf^2-tw^2)
=68.59E6 mm⁴
compute D2=h/2=100 mm
compute D1=D2-tf=90 mm
Shape factor:
F=(1+3*(D2^2-D1^2)*D1/(2*D2^3)*(0.5*b/tw-1))*(4*D2^2*Ax)/(10*Iy)=2.1935
Shear area in z-direction Az=Ax/F=3464.8 mm²
compute D2=b/2=100 mm
compute D1=D2-tw=90 mm
Shape factor:
F=(1+3*(D2^2-D1^2)*D1/(2*D2^3)*(0.5*h/tf-1))*(4*D2^2*Ax)/(10*Iz)=2.1935
Shear area in y-direction Ay=Ax/F=3464.8 mm²

Location: Square solid section analysed using general method

Properties of any plane section

The section is defined by coordinates of corner points taken in anti-clockwise order round the section. The cross section is kept to the left of the edge running from a previous point to the next point. The section is closed when the original point is specified again.

Coordinates of points in order:

Point 1	: X-coordinate	x(1)=0 mm
	Y-coordinate	y(1)=0 mm
Point 2	: X-coordinate	x(2)=400 mm
	Y-coordinate	y(2)=0 mm
Point 3	: X-coordinate	x(3)=400 mm
	Y-coordinate	y(3)=400 mm
Point 4	: X-coordinate	x(4)=0 mm
	Y-coordinate	y(4)=400 mm
Point 5	: X-coordinate	x(5)=0 mm
	Y-coordinate	y(5)=0 mm

Cross-sectional area 160000 mm^2

Second moments of area (inertias) Ixx=2.1333E9 mm^4
Iyy=2.1333E9 mm^4

Product of inertia $\int dA.xy$ Ixy=-1.9073E-6 mm^4

Distance of centroid from origin X=200 mm
Y=200 mm

X and Y are principal axes.

Angle of rotation of section thetaD=45°

Second moments of area (inertia) about redefined axes:

Ix'=Ixx*(COS(thetaR))^2+Iyy*(SIN(thetaR))^2-Ixy*SIN(2*thetaR)
=2.1333E9 mm^4

Iy'=Iyy*(COS(thetaR))^2+Ixx*(SIN(thetaR))^2+Ixy*SIN(2*thetaR)
=2.1333E9 mm^4

Ixy'=(Ixx-Iyy)/2*SIN(2*thetaR)+Ixy*COS(2*thetaR)=-0.11679E-21 mm^4

Plot of section

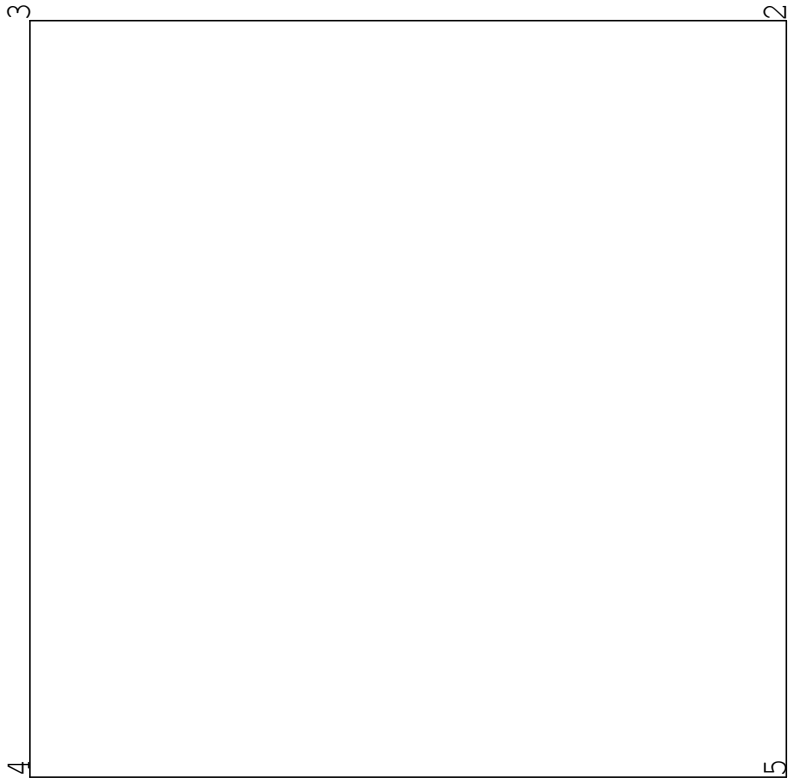

Location: Square box-section analysed using general method

Properties of any plane section

The section is defined by coordinates of corner points taken in anti-clockwise order round the section. The cross section is kept to the left of the edge running from a previous point to the next point. The section is closed when the original point is specified again.

Coordinates of points in order:

Point 1	: X-coordinate	x(1)=0 mm
	Y-coordinate	y(1)=0 mm
Point 2	: X-coordinate	x(2)=400 mm
	Y-coordinate	y(2)=0 mm
Point 3	: X-coordinate	x(3)=400 mm
	Y-coordinate	y(3)=400 mm
Point 4	: X-coordinate	x(4)=0 mm
	Y-coordinate	y(4)=400 mm
Point 5	: X-coordinate	x(5)=0 mm
	Y-coordinate	y(5)=360 mm
Point 6	: X-coordinate	x(6)=360 mm
	Y-coordinate	y(6)=360 mm
Point 7	: X-coordinate	x(7)=360 mm
	Y-coordinate	y(7)=40 mm
Point 8	: X-coordinate	x(8)=40 mm
	Y-coordinate	y(8)=40 mm
Point 9	: X-coordinate	x(9)=40 mm
	Y-coordinate	y(9)=360 mm
Point 10	: X-coordinate	x(10)=0 mm
	Y-coordinate	y(10)=360 mm
Point 11	: X-coordinate	x(11)=0 mm
	Y-coordinate	y(11)=0 mm

Cross-sectional area 57600 mm²

Second moments of area (inertias) Ixx=1.2595E9 mm⁴
Iyy=1.2595E9 mm⁴

Product of inertia $\int dA.xy$ Ixy=-1.4305E-6 mm⁴

Distance of centroid from origin X=200 mm
Y=200 mm

X and Y are principal axes.

Angle of rotation of section thetaD=45°

Second moments of area (inertia) about redefined axes:
Ix'=Ixx*(COS(thetaR))^2+Iyy*(SIN(thetaR))^2-Ixy*SIN(2*thetaR)
=1.2595E9 mm⁴
Iy'=Iyy*(COS(thetaR))^2+Ixx*(SIN(thetaR))^2+Ixy*SIN(2*thetaR)
=1.2595E9 mm⁴
Ixy'=(Ixx-Iyy)/2*SIN(2*thetaR)+Ixy*COS(2*thetaR)=-87.594E-24 mm⁴

Plot of section

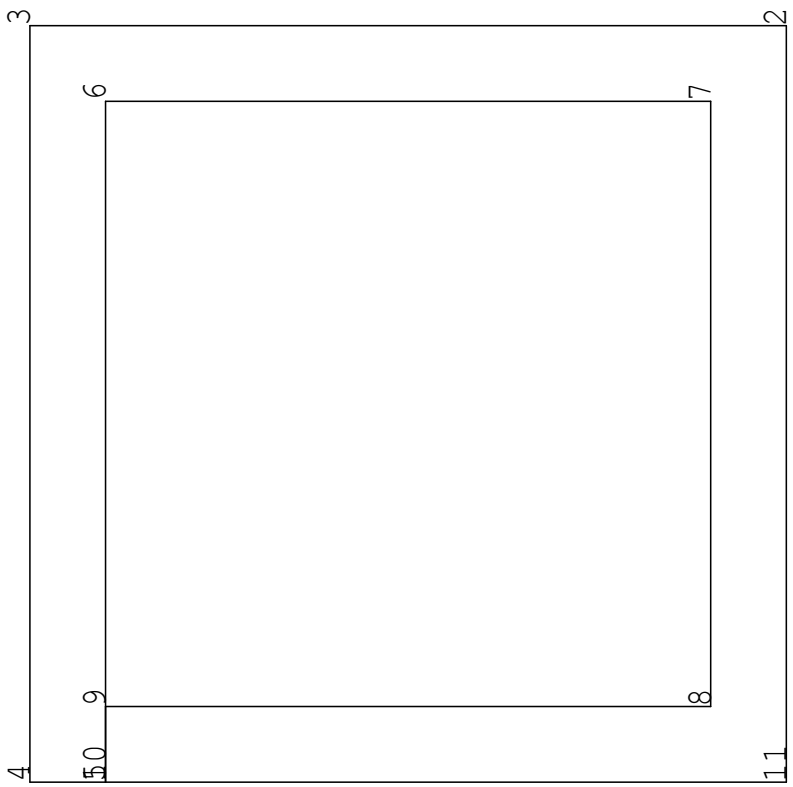

Location: Circular voided edge member

Properties of a plane section

Number of items in section nitem=2

Item Number 1

Item is defined by co-ordinates of corner points taken in
anti-clockwise order around the item. The item is closed
when the co-ordinates of the first point input are re-specified.

Item weighting	iw(1)=1
Coordinates of points in order	x(1)=500
	y(1)=1000
	x(2)=1500
	y(2)=1000
	x(3)=1500
	y(3)=1500
	x(4)=1750
	y(4)=1500
	x(5)=1750
	y(5)=2000
	x(6)=500
	y(6)=2000
	x(7)=500
	y(7)=1000
Location of centroid	Xc=1069.4
	Yc=1527.8
Properties of item are weighted	
Area of item	AW=1.125E6
First moment of area about X axis	MX=1.7188E9
First moment of area about Y axis	MY=1.2031E9
Second moment of area about X axis:	
	IXX=2.7188E12
Second moment of area about Y axis:	
	IYY=1.4141E12
Product second moment of area about XY axes:	
	IXY=1.8555E12

Plot of Item Number 1

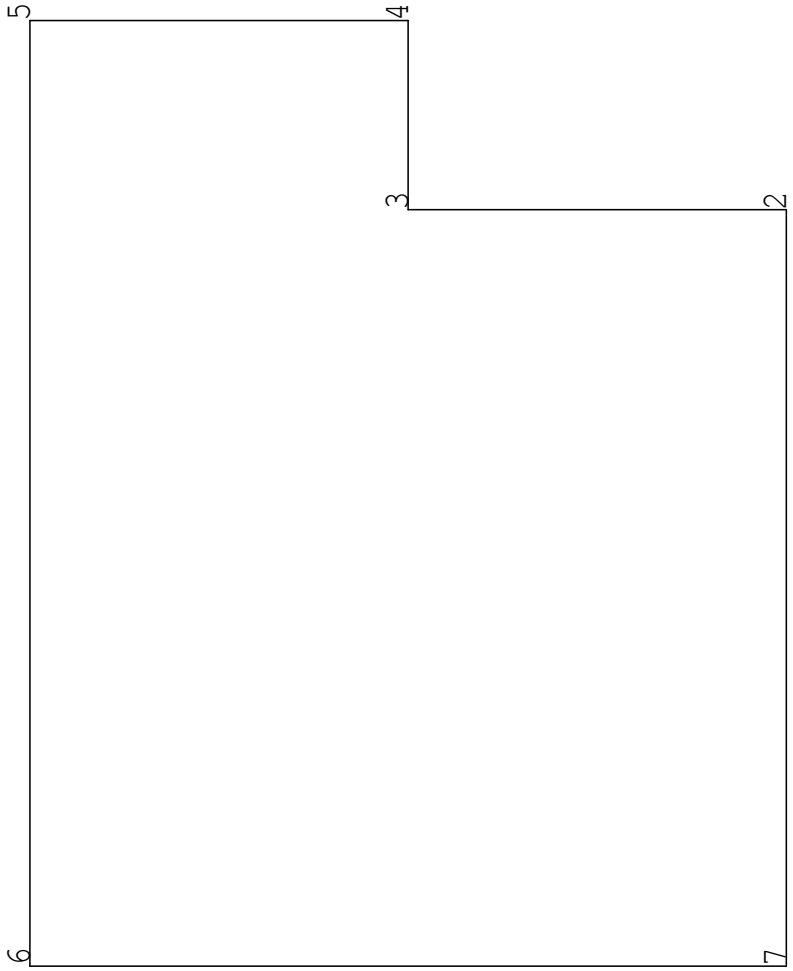

Item Number 2

```
Circle diameter                    cd(2)=600
Location of centroid               Xc(2)=1000
                                   Yc(2)=1500
Weighting of item                  iw(2)=-1
Second moment of area about X axis:
                                   IXX=(PI*cd(it)^4/64)*iw(it)+AW
                                       *Yc(it)^2=-642.53E9
Second moment of area about Y axis:
                                   IYY=(PI*cd(it)^4/64)*iw(it)+AW
                                       *Xc(it)^2=-289.11E9
Product second moment of area about XY axes
                                   IXY=AW*Xc(it)*Yc(it)=-424.12E9
```

Weighted sectional properties

```
x,y - centroidal axes
X,Y - global axes
u,v - principal axes

Cross-sectional area               842257

Second moments of area(inertias)   Ixx=86.125E9
                                   Iyy=119.3E9
                                   Ixy=16.648E9

Distance of centroid from origin   X=1092.7
                                   Y=1537.2

Principal second moments of area   Iu=79.211E9
                                   Iv=126.21E9

Angle of principal u axis counter-
clockwise from global X axis       22.553  Degrees
```

Location: Edge beam

Section properties of a plate girder with welded connections

Number of bottom flange plates	nobfp=1
Number of top flange plates	notfp=1
Bottom flange plate	
Breadth	bbf(1)=435 mm
Depth	dbf(1)=24 mm
Web plate	
Breadth	bw=12 mm
Depth	dw=475 mm
Top flange plate	
Breadth	btf(1)=435 mm
Depth	dtf(1)=24 mm

SECTION SUMMARY - gross values

Gross section elastic properties

Depth of girder	dob=Db(n)=523 mm
Area	26580 mm²
1st moment of area about soffit	6.9507E6 mm³
Centroid of section from soffit	CGga=Mga/Ga=261.5 mm
Second moments of area about centroidal axes	
About x-x axis	1.408E9 mm⁴
About y-y axis	329.32E6 mm⁴
Elastic section moduli	
Top	Ztg=Igxx/(dob-CGga)=5.3842E6 mm³
Bottom	Zbg=Igxx/CGga=5.3842E6 mm³

Gross section plastic properties

Half gross area	hga=Ga/2=13290 mm²
Equal area line is in web	
Distance from beam soffit	eal=Db(m)-(ca-hga)/b(m)=261.5 mm
Plastic modulus	5.8864E6 mm³
Bottom flange plate	
Total number of holes	nh(1)=4
Diameter of hole	di(1)=22 mm
Hole centre-line from y-y axis	dis(1)=56 mm
Diameter of hole	di(2)=22 mm
Hole centre-line from y-y axis	dis(2)=162 mm
Web	
Total number of holes	nh(2)=0
Top flange plate	
Total number of holes	nh(3)=0

SECTION SUMMARY - net values

Net section elastic properties

Area	24468 mm^2
1st moment of area about soffit	6.9253E6 mm^3
Centroid of girder from soffit	CGna=Mna/Na=283.04 mm
Second moments of area about centroidal axes	
About x-x axis	1.265E9 mm^4
About y-y axis	298.21E6 mm^4
Elastic section moduli	
Top	Ztn=Inxx/(dob-CGna)=5.2718E6 mm^3
Bottom	Zbn=Inxx/CGna=4.4695E6 mm^3

Net section plastic properties

Distance to equal area line from beam soffit	
Distance	eal=Dbn(p)-(ca-hna)/bn(p)=349.5 mm
Plastic modulus	5.2666E6 mm^3

Location: Edge girder

Section properties of a plate girder with angle connections

Number of bottom flange plates	nobfp=1
Number of top flange plates	notfp=1
Bottom flange plate	
Breadth	bbf(1)=435 mm
Depth	dbf(1)=24 mm
Web plate	
Breadth	bw=12 mm
Depth	dw=475 mm
Top flange plate	
Breadth	btf(1)=435 mm
Depth	dtf(1)=24 mm
Bottom flange/web angles	
Top flange/web angles	

SECTION SUMMARY - gross values

Gross section elastic properties

Depth of girder	dob=Db(n)=523 mm
Area	35604 mm²
1st moment of area about soffit	9.3104E6 mm³
Centroid of girder from soffit	CGga=Mga/Ga=261.5 mm
Second moments of area about centroidal axes	
About x-x axis	1.8071E9 mm⁴
About y-y axis	349.03E6 mm⁴
Elastic section moduli	
Top	Ztg=Igxx/(dob-CGga)=6.9106E6 mm³
Bottom	Zbg=Igxx/CGga=6.9106E6 mm³

Gross section plastic properties

Half gross area	hga=Ga/2=17802 mm²
Equal area line is in web between	web legs of angles
Distance to girder soffit	eal=Db(m)-(ca-hga)/b(m)=261.5 mm
Plastic modulus	7.7643E6 mm³

Plastic modulus of bottom flange plates and angles.
Equal area line is in bottom flange

Distance to girder soffit	eal=Db(m)-(ca-htabg)/bm(m)=17.186 mm
Plastic modulus	237756 mm³

Plastic modulus of top flange plates and angles.
Equal area line is in top flange

Distance to girder soffit	eal=Db(m)-(ca-htatg)/bm(m)=505.81 mm
Plastic modulus	237756 mm³

Allowance for holes through section

Bottom flange plate

Total number of holes	nh(1)=4

```
Diameter of hole                  di(1)=22 mm
Hole centre-line from y-y axis    dis(1)=56 mm
Diameter of hole                  di(2)=22 mm
Hole centre-line from y-y axis    dis(2)=162 mm
Bottom angle flange leg
Total number of holes             nh(2)=2
Diameter of hole                  di(51)=22 mm
Hole centre-line from y-y axis    dis(51)=56 mm

Bottom angle web leg and included web
Total number of holes             nh(3)=1
Diameter of hole                  di(101)=22 mm
Hole centre from soffit of girder dis(101)=74 mm

Web not included with angles
Total number of holes             nh(4)=0

Top angle web leg and included web
Total number of holes             nh(5)=0

Top angle flange leg
Total number of holes             nh(6)=0

Top flange plate
Total number of holes             nh(7)=0
```

SECTION SUMMARY - net values

Net section elastic properties

Area	32172 mm²
1st moment of area about soffit	9.2107E6 mm³
Centroid of girder from soffit	CGna=Mna/Na=286.29 mm
Second moments of area about centroidal axes	
About x-x axis	1.5996E9 mm⁴
About y-y axis	316.16E6 mm⁴
Elastic section moduli	
Top	Ztn=Inxx/(dob-CGna)=6.7578E6 mm³
Bottom	Zbn=Inxx/CGna=5.5873E6 mm³

Net section plastic properties

Half net area	hna=Na/2=16086 mm²
Distance to equal area line from girder soffit	
Distance	eal=Dbn(p)-(ca-hna)/bn(p)=400.83 mm
Plastic modulus	6.7215E6 mm³
Plastic modulus of bottom flange plates and angles.	
Distance to equal area line from girder soffit	
Distance	eal=Dbn(p)-(ca-htabn)/bz(p)=16.98 mm
Plastic modulus bottom flange and angles 185939 mm³	
Plastic modulus of top flange plates and angles.	
Distance to equal area line from girder soffit	
Distance	eal=Dbn(p)-(ca-htatn)/bz(p)=505.81 mm
Plastic modulus top flange and angles 237756 mm³	

Location: Zone A

Influence surfaces of elastic plates - Pucher Chart 17a

Bending moment at the restrained edge of a cantilever

Cantilever span length		span=3.5
Number of applied loads		nol=4
Total patch load		pl(1)=10.5
Load position	x' coordinate	x'(1)=0
	y' coordinate	y'(1)=0
Load spread	dimension dx'	dx'(1)=0.74
	dimension dy'	dy'(1)=1
Point load		pl(2)=10.5
Load position	x' coordinate	x'(2)=0
	y' coordinate	y'(2)=1.6
Point load		pl(3)=7
Load position	x' coordinate	x'(3)=3
	y' coordinate	y'(3)=0
Point load		pl(4)=7
Load position	x' coordinate	x'(4)=3
	y' coordinate	y'(4)=1.6

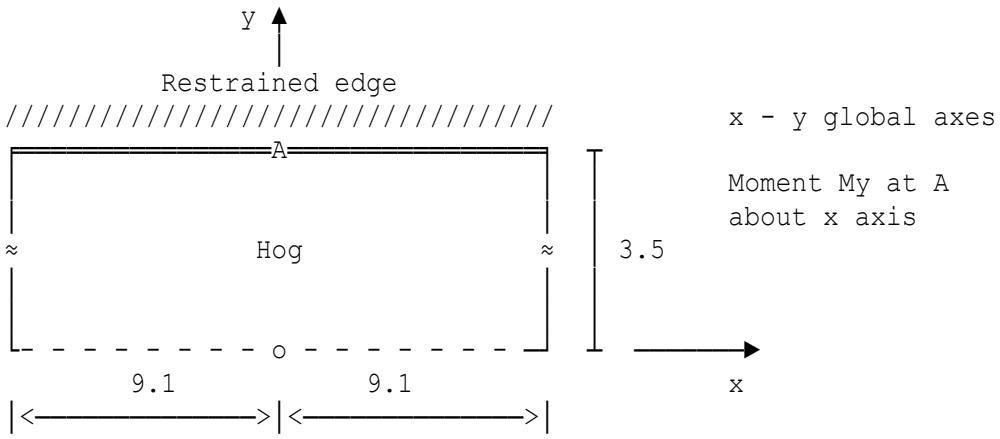

Range of analysis x = ± 9.1 (2.6 times effective span).
Loads within x = ± 9.1 (2.6 times span) result in hog at A.
Loads in the vicinity of A should be applied as patch loads.

Moment per unit length and associated position of load group.
Hogging moment - negative.

Moment my	Position of Load Group x	y
-10.021	0	0.5

Location: Zone A

Influence surfaces of elastic plates - Pucher Charts 18A and 19A

Bending moments at the centre of a cantilever

Total patch load		pl(1)=10.5
Load position	x' coordinate	x'(1)=0
	y' coordinate	y'(1)=0
Load spread	dimension dx'	dx'(1)=0.74
	dimension dy'	dy'(1)=1
Point load		pl(2)=10.5
Load position	x' coordinate	x'(2)=0
	y' coordinate	y'(2)=1.6
Point load		pl(3)=7
Load position	x' coordinate	x'(3)=3
	y' coordinate	y'(3)=0
Point load		pl(4)=7
Load position	x' coordinate	x'(4)=3
	y' coordinate	y'(4)=1.6

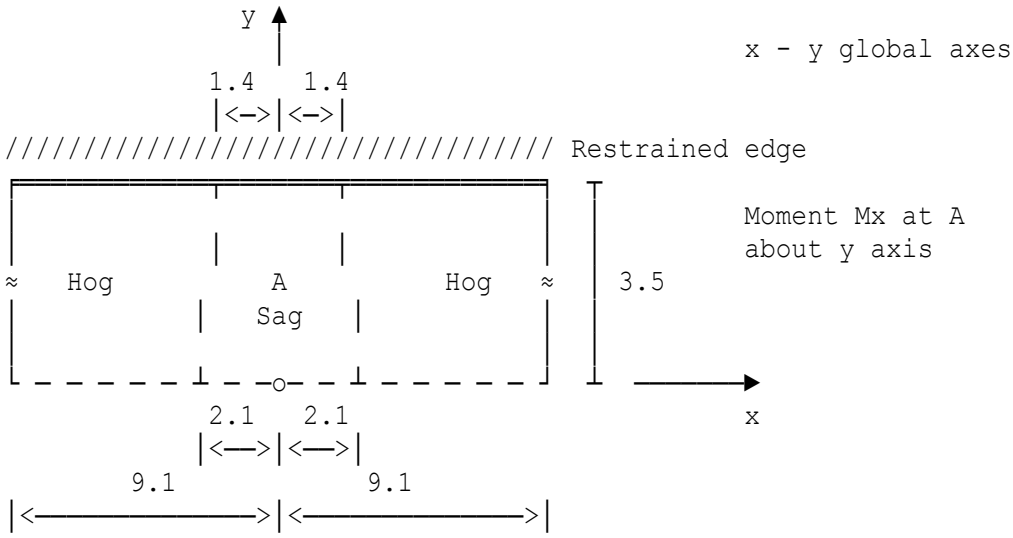

Range of analysis x = ± 9.1 (2.6 times effective span).
Loads within x = ± 2.1 and x = ± 1.4 result in sag at A.
Loads outside x = ± 2.1 and x = ± 1.4 result in hog at A.
Loads in the immediate vicinity of A should be applied as patch loads.

```
                    y ↑                                  x - y global axes
                      |
                 2.8   2.8
               |<——>|<——>|
////////////////////////////////////  Restrained edge
╔═══════════╤═══════════╤═══════════╗  ┬
│             Sag                   │  │      Moment My at A
│           |           |    Hog    |  │      about x axis
≈   Hog    \     A     /          ≈   │  3.5
|            \- - - -/  ┬           |  │
|                       │ 1.4       |  │
└ - - - - - - - -o- - - ┴ - - - - - ┘  ┴  ————▶
               0.7    0.7                          x
               |<—>|<—>|
           9.1            9.1
|<————————————>|<————————————>|
```

Range of analysis x = ± 9.1 (2.6 times effective span).
Loads with y > 1.4 and within x = ± 2.8 and x = ± 0.7
result in sag at A.
Loads outside this region result in hog at A.
Loads in the vicinity of A should be applied as patch loads.

Moments per unit length and associated positions of load group.
Sagging moment - positive Hogging moment - negative.

Moment mx	Moment my	Position of Load Group x	y
1.3355	0.73378	0	1.75

Location: Zone A

Influence surfaces of elastic plates - Pucher Chart 20A

Bending moment at the free edge of a cantilever

Cantilever span length		span=3.5
Number of applied loads		nol=4
Total patch load		pl(1)=10.5
Load position	x' coordinate	x'(1)=0
	y' coordinate	y'(1)=0
Load spread	dimension dx'	dx'(1)=0.74
	dimension dy'	dy'(1)=1
Point load		pl(2)=10.5
Load position	x' coordinate	x'(2)=0
	y' coordinate	y'(2)=1.6
Point load		pl(3)=7
Load position	x' coordinate	x'(3)=3
	y' coordinate	y'(3)=0
Point load		pl(4)=7
Load position	x' coordinate	x'(4)=3
	y' coordinate	y'(4)=1.6

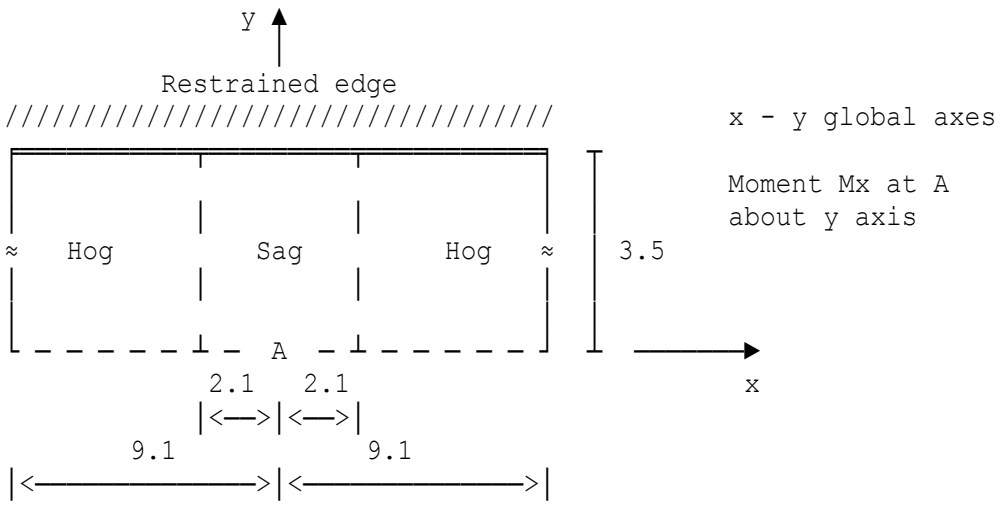

Range of analysis x = ± 9.1 (2.6 times effective span).
Loads within x = ± 2.1 (0.6 times span) result in sag at A.
Loads outside x = ± 2.1 (0.6 times span) result in hog at A.
Loads in the immediate vicinity of A should be applied as patch loads.

Moment per unit length and associated positions of load group.
Sagging moment - positive Hogging moment - negative.

Moment	Position of Load Group	
mx	x	y
3.5643	0	0.5

Location: Zone A

Influence surfaces of elastic plates - Pucher Charts 1 and 2

Bending moment at the centre of a plate strip with two supported edges

Span of plate		span=3.5
Number of applied loads		nol=4
Total patch load		pl(1)=10.5
Load position	x' coordinate	x'(1)=0
	y' coordinate	y'(1)=0
Load spread	dimension dx'	dx'(1)=0.74
	dimension dy'	dy'(1)=1
Point load		pl(2)=10.5
Load position	x' coordinate	x'(2)=0
	y' coordinate	y'(2)=1.6
Point load		pl(3)=7
Load position	x' coordinate	x'(3)=3
	y' coordinate	y'(3)=0
Point load		pl(4)=7
Load position	x' coordinate	x'(4)=3
	y' coordinate	y'(4)=1.6

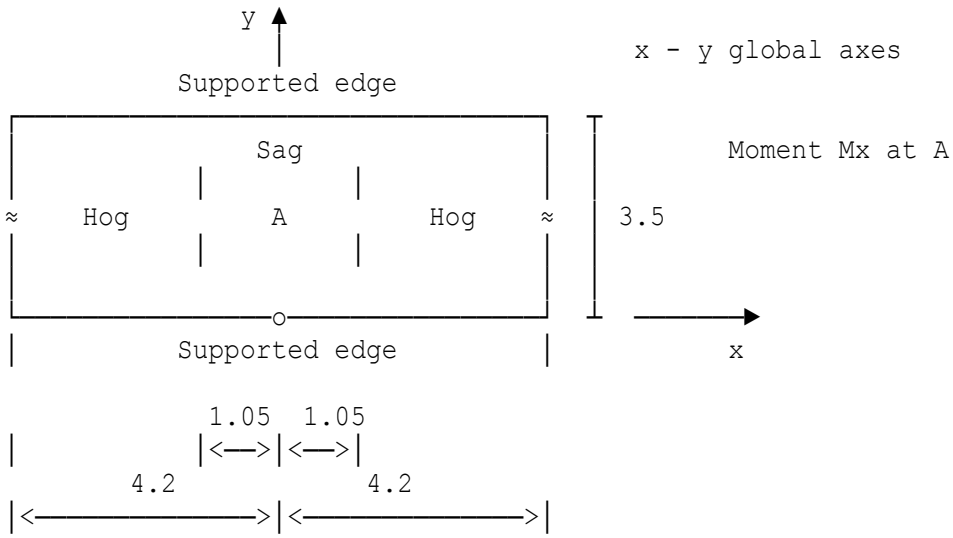

Range of analysis x = ± 4.2 (1.2 times effective span).
Loads within x = ± 1.05 (0.3 times span) result in sag at A.
Loads outside x = ± 1.05 (0.3 times span) result in hog at A.
Loads in the vicinity of A should be applied as patch loads.

```
                    y
                    ↑
              Supported edge                    x - y global axes
        ┌──────────────────────────────┐  ┌
        │                              │  │     Moment My at A
        │                              │  │
        ≈              A    Sag       ≈  │ 3.5
        │                              │  │
        │                              │  │
        └──────────────o───────────────┘  └  ──────►
        │          Supported edge      │          x
                4.2            4.2
        |<──────────────>|<──────────────>|
```

Range of analysis x = ± 4.2 (1.2 times effective span).
Loads within x = ± 4.2 (1.2 times span) result in sag at A.
Loads in the vicinity of A should be applied as patch loads.

Moments per unit length and associated positions of load group.
Sagging moment - positive Hogging moment - negative.

Moment mx	Moment my	Position of Load Group x	y
1.2372	2.4674	0	1.75

Location: Zone A

Influence surfaces of elastic plates - Pucher Charts 3 and 4

Bending moment at quarter point of a plate strip with two supported edges

Span of plate		span=3.5
Number of applied loads		nol=4
Total patch load		pl(1)=10.5
Load position	x' coordinate	x'(1)=0
	y' coordinate	y'(1)=0
Load spread	dimension dx'	dx'(1)=0.74
	dimension dy'	dy'(1)=1
Point load		pl(2)=10.5
Load position	x' coordinate	x'(2)=0
	y' coordinate	y'(2)=1.6
Point load		pl(3)=7
Load position	x' coordinate	x'(3)=3
	y' coordinate	y'(3)=0
Point load		pl(4)=7
Load position	x' coordinate	x'(4)=3
	y' coordinate	y'(4)=1.6

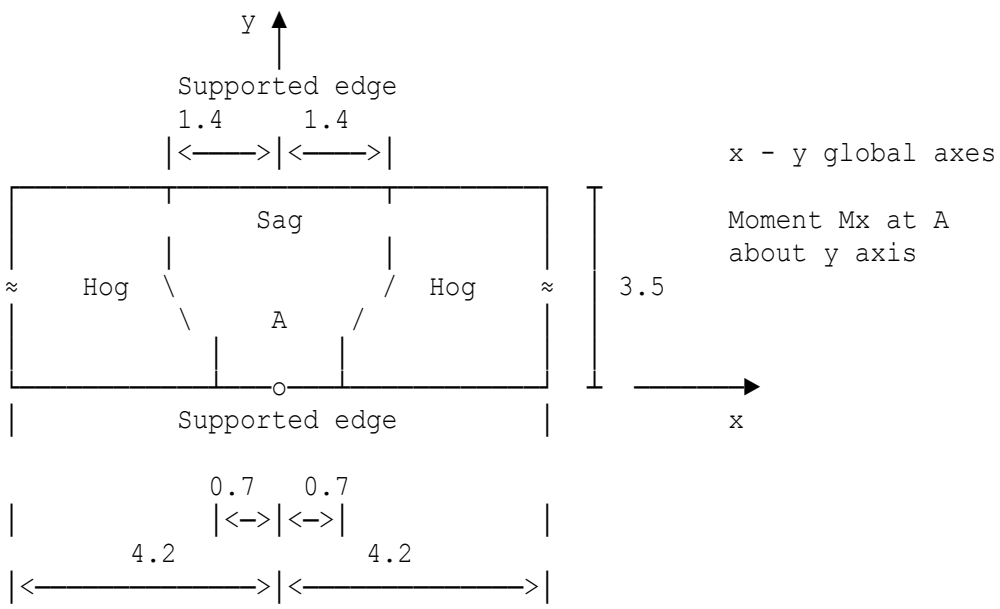

Range of analysis x = ± 4.2 (1.2 times effective span).
Loads within x = ± 1.4 (0.4 times span) and within
x = ± 0.7 (0.2 times span) result in sag at A.
Loads outside these limits result in hog at A.
Loads in the vicinity of A should be applied as patch loads.

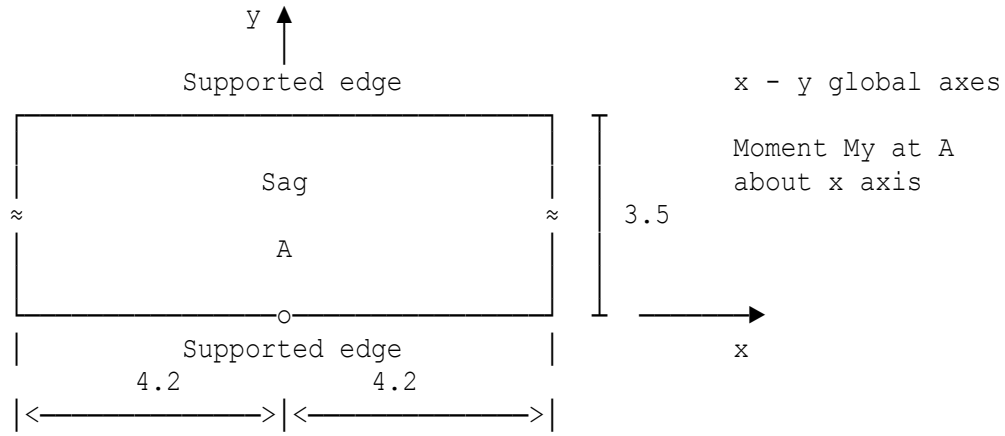

Range of analysis x = ± 4.2 (1.2 times effective span).
Loads within x = ± 4.2 (1.2 times span) result in sag at A.
Loads in the vicinity of A should be applied as patch loads.

Moments per unit length and associated positions of load group.
Sagging moment - positive Hogging moment - negative.

Moment mx	Moment my	Position of Load Group x	y
1.2581	2.3184	0	0.875

Location: Zone A

Influence surfaces of elastic plates - Pucher Charts 12 and 13

Bending moment at the centre of a plate strip with two restrained edges

Span of plate		span=3.5
Number of applied loads		nol=4
Total patch load		pl(1)=10.5
Load position	x' coordinate	x'(1)=0
	y' coordinate	y'(1)=0
Load spread	dimension dx'	dx'(1)=0.74
	dimension dy'	dy'(1)=1
Point load		pl(2)=10.5
Load position	x' coordinate	x'(2)=0
	y' coordinate	y'(2)=1.6
Point load		pl(3)=7
Load position	x' coordinate	x'(3)=3
	y' coordinate	y'(3)=0
Point load		pl(4)=7
Load position	x' coordinate	x'(4)=3
	y' coordinate	y'(4)=1.6

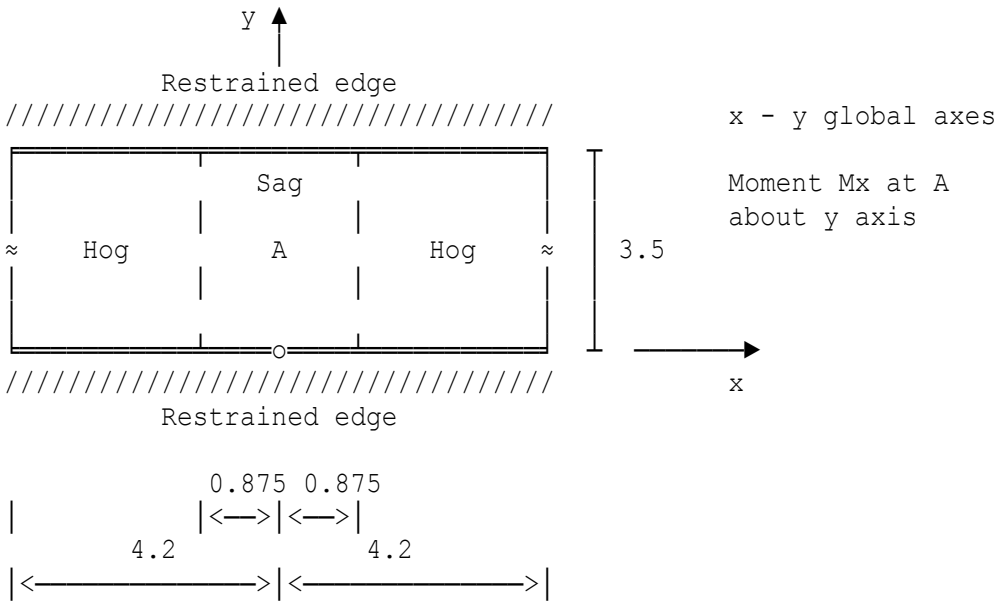

Range of analysis x = ± 4.2 (1.2 times effective span).
Loads within x = ± 0.875 (0.25 times span) result in sag at A.
Loads outside x = ± 0.875 (0.25 times span) result in hog at A.
Loads in the vicinity of A should be applied as patch loads.

```
                    y
                    ↑
            Restrained edge
////////////////////////////////////          x - y global axes
╔═══════════════════════════════════╗
│                                   │          Moment My at A
│                                   │          about x axis
≈                A    Sag           ≈    3.5
│                                   │
│                                   │
╚═══════════════o═══════════════════╝
////////////////////////////////////          x
            Restrained edge
          4.2            4.2
|<──────────────>|<──────────────>|
```

Range of analysis x = ± 4.2 (1.2 times effective span).
Loads within x = ± 4.2 (1.2 times span) result in sag at A.
Loads in the vicinity of A should be applied as patch loads.

Moments per unit length and associated positions of load group.
Sagging moment - positive Hogging moment - negative.

Moment mx	Moment my	Position of Load Group x	y
0.96017	1.3949	0	1.75

Location: Zone A

Influence surfaces of elastic plates - Pucher Charts 14 and 15

Bending moment at quarter point of a plate strip with two restrained edges

Span of plate		span=3.5
Number of applied loads		nol=4
Total patch load		pl(1)=10.5
Load position	x' coordinate	x'(1)=0
	y' coordinate	y'(1)=0
Load spread	dimension dx'	dx'(1)=0.74
	dimension dy'	dy'(1)=1
Point load		pl(2)=10.5
Load position	x' coordinate	x'(2)=0
	y' coordinate	y'(2)=1.6
Point load		pl(3)=7
Load position	x' coordinate	x'(3)=3
	y' coordinate	y'(3)=0
Point load		pl(4)=7
Load position	x' coordinate	x'(4)=3
	y' coordinate	y'(4)=1.6

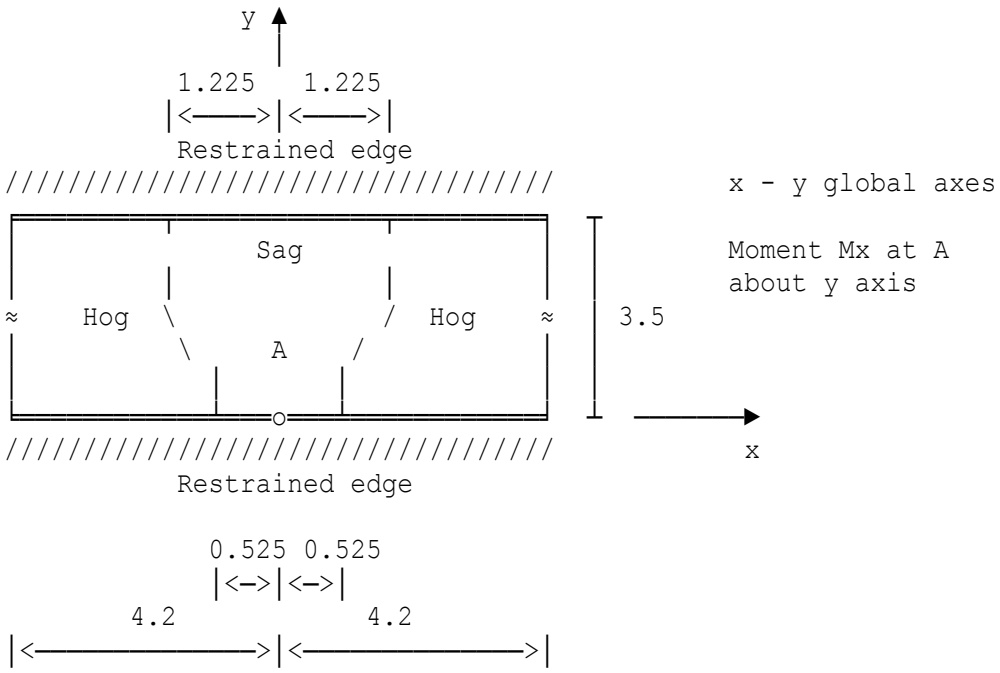

Range of analysis x = ± 4.2 (1.2 times effective span).
Loads within x = ± 1.225 (0.35 times span) and within
x = ± 0.525 (0.15 times span) result in sag at A.
Loads outside these limits result in hog at A.
Loads in the vicinity of A should be applied as patch loads.

```
                  y ↑                        x - y global axes

             Restrained edge                 Moment My at A
/////////////////////////////////////        about x axis
╔═══════════════════════════════════╗
│               Hog                 │
│    -------\         /-------      │
≈            \-----/                ≈
│               A                   │   1.575   2.1     3.5
│              Sag                  │
╚═══════════════o═══════════════════╝                    ──────→
/////////////////////////////////////                              x
             Restrained edge
        4.2            4.2
|<──────────────>|<──────────────>|
```

Range of analysis x = ± 4.2 (1.2 times effective span).
Loads with y < 1.575 (0.45 times span) and with
y < 2.1 (0.60 times span) result in sag at A.
Loads outside these limits result in hog at A.
Loads in the vicinity of A should be applied as patch loads.

Moment mx	Moment my	Position of Load Group x	y
0.79537	0.67223	0	0.875

Location: Zone A

Influence surfaces of elastic plates - Pucher Chart 16

Bending moment for the edge of a plate strip with two restrained edges

Span of plate		span=3.5
Number of applied loads		nol=4
Total patch load		pl(1)=10.5
Load position	x' coordinate	x'(1)=0
	y' coordinate	y'(1)=0
Load spread	dimension dx'	dx'(1)=0.74
	dimension dy'	dy'(1)=1
Point load		pl(2)=10.5
Load position	x' coordinate	x'(2)=0
	y' coordinate	y'(2)=1.6
Point load		pl(3)=7
Load position	x' coordinate	x'(3)=3
	y' coordinate	y'(3)=0
Point load		pl(4)=7
Load position	x' coordinate	x'(4)=3
	y' coordinate	y'(4)=1.6

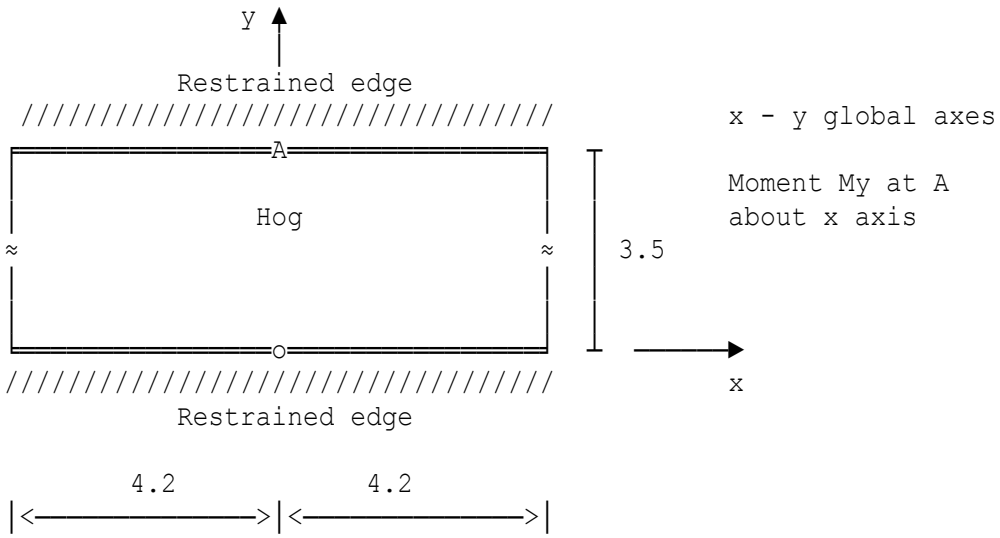

Range of analysis x = ± 4.2 (1.2 times effective span).
Loads in the vicinity of A should be applied as patch loads.

Moment per unit length and associated positions of load group.
Hogging moment - negative.

Moment my	Position of Load Group x	y
-2.3277	0	3

Location: Yield line analysis - Example 8.04 by LL Jones

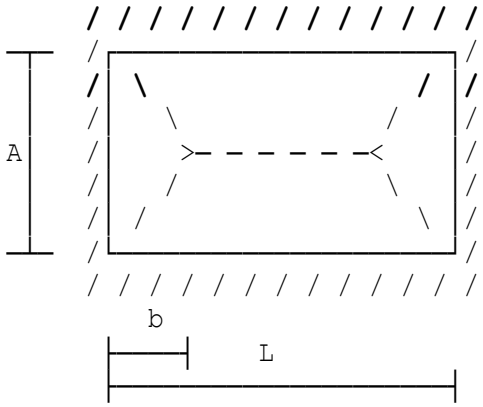

Rectangular slab, simply supported along its edges

Subjected to a UDL of w kN/m²

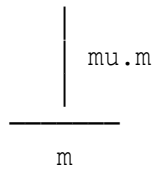

Length of slab	L=6.096 m
Width of slab	A=4.572 m
Ultimate UDL	w=15.848 kN/m²

Moment ratio (mu)	Ultimate mmt moment (m)	mu.m	Distance b
0.5	22.654 kNm/m	11.327 kNm/m	2.0708 m
0.6	21.427 kNm/m	12.856 kNm/m	2.2062 m
0.7	20.367 kNm/m	14.257 kNm/m	2.3233 m
0.8	19.435 kNm/m	15.548 kNm/m	2.4262 m
0.9	18.605 kNm/m	16.744 kNm/m	2.5178 m
1	17.859 kNm/m	17.859 kNm/m	2.6002 m

Conventions:

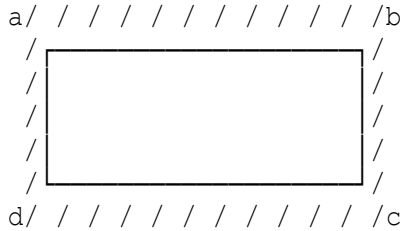

positive

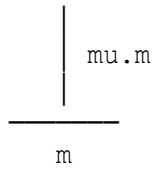

Steel in bottom of slab produces positive moment. The side key indicates that the ultimate moment/unit length along a positive yield line in the direction ab is m, and the ultimate moment per unit length along a positive yield-line in the direction bc is mu.m. This implies that the steel to produce the moment m is at right angles to this direction, that is in direction bc, while the steel to produce the moment mu.m is in the direction ab.

Location: Ex 5 from 'The analysis of engineering structures'

Suspension bridge with three-pinned stiffening girder

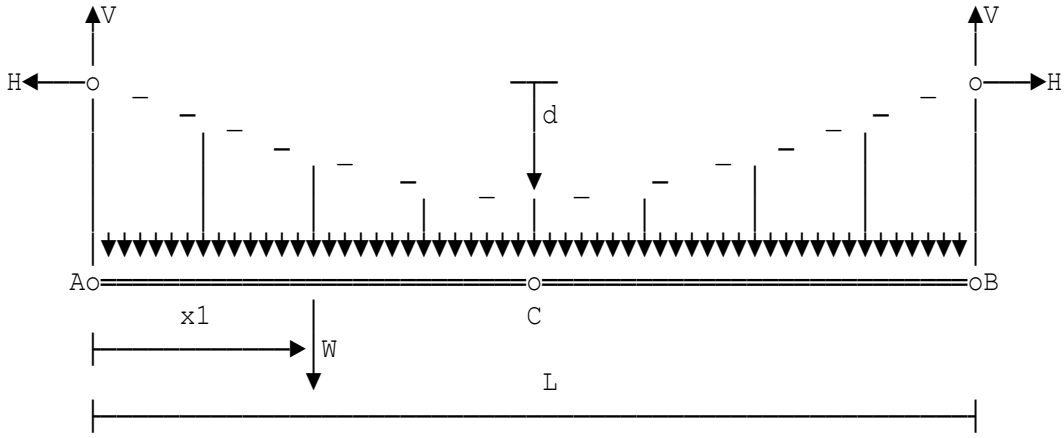

Span of suspension bridge	L=106.68 m
Dip in cable at centre of bridge	d=10.668 m
Total DW of bridge as UDL	w0=32.69 kN/m
Point load on stiffening girders	W=3487.4 kN
Distance of W from left hand end	x1=26.67 m
Total sectional area of cables	A=0.076129 m²
Total number of suspension rods	N=22
Equivalent UDL due to conc.load	w=4*W*x1/L^2=32.69 kN/m
Horizontal force at supports	H=w*L^2/(8*d)=4359.3 kN

Moment and shears in girders at 20'th points due to concentrated load

Convention: Sagging moment is positive; hogging moment is negative.

Distance from A	Moment	Shear
0 m	0 kNm	871.85 kN
5.334 m	5115.5 kNm	1046.2 kN
10.668 m	11161 kNm	1220.6 kN
16.002 m	18137 kNm	1395 kN
21.336 m	26043 kNm	1569.3 kN
26.67 m	34878 kNm	1743.7 kN
32.004 m	26043 kNm	-1569.3 kN
37.338 m	18137 kNm	-1395 kN
42.672 m	11161 kNm	-1220.6 kN
48.006 m	5115.5 kNm	-1046.2 kN
53.34 m	0 kNm	-871.85 kN
58.674 m	-4185.4 kNm	-697.48 kN
64.008 m	-7440.7 kNm	-523.11 kN
69.342 m	-9765.9 kNm	-348.74 kN
74.676 m	-11161 kNm	-174.37 kN
80.01 m	-11626 kNm	0.46456E-12 kN
85.344 m	-11161 kNm	174.37 kN
90.678 m	-9765.9 kNm	348.74 kN
96.012 m	-7440.7 kNm	523.11 kN
101.35 m	-4185.4 kNm	697.48 kN
106.68 m	0 kNm	871.85 kN

Combining equivalent UDL due to conc load with UDL from dead weight

Total UDL on cables	wt=w0+w=65.38 kN/m
Vertical force at each support	V=wt*L/2=3487.4 kN
Horizontal force at each support	H=wt*L^2/(8*d)=8718.5 kN
Tot tension in cables at centre	T=H*SQR(1+16*d^2/L^2)=9390.1 kN
Force in each suspension rod	Frod=wt*L/N=317.03 kN

Location: Example from Appendix 13.2, given by Harrison.

The method of analysis deals with the two dimensional cable problem in which only horizontal and vertical loads are considered, and these act in the plane of the cable. A Newton iteration procedure is used to satisfy 'equilibrium' and 'compatibility'.

Cable data

Unstretched length of cable UCL=1100
Cross-sectional area of cable A=0.055556
Elastic modulus of cable E=2.88E9
Unit weight of cable SW=27
Coefficient of thermal expansion ALPHA=6.5E-6

Supports

X coordinate of right support XR=1000
Y coordinate of right support YR=-200
Hor. flexibility of left support FLH=0
Vert. flexibility of left support FLV=0
Sloping flex. of left support FLS=0
Hor. flexibility of right support FRH=0
Vert flexibility of right support FRV=0
Sloping flex. of right support FRS=0

Loading details

No. of loads at initially fixed positions NSL=0
No. of loads at constant X coord NXL=0
Temperature rise TR=0
No. of cable elements (typ. 100) NS=100
Initial tension at left end TG=30000
Initial slope at left end THETA=30°
Tension=30000 Angle=30 Misclose=216.29
L.H. tension=30000 Slope angle=30°
R.H. tension=29706 Slope angle=29.003°
Total stretched length =1100.2
Maximum depression =151.65 at node No. 52
Dip =258.32 at node No. 52

Node	X-coordinate	Y-coordinate	Element	Tension
2	9.5281	5.501	1	30000
3	19.103	10.92	2	29853
4	28.725	16.255	3	29707
5	38.393	21.505	4	29565
6	48.108	26.67	5	29424
7	57.868	31.747	6	29286
8	67.674	36.736	7	29150
9	77.525	41.635	8	29016
10	87.421	46.444	9	28885
11	97.361	51.16	10	28757
12	107.34	55.782	11	28631
13	117.37	60.311	12	28507
14	127.44	64.743	13	28386
15	137.55	69.078	14	28268

16	147.71	73.315	15	28152
17	157.9	77.453	16	28039
18	168.13	81.49	17	27929
19	178.41	85.425	18	27821
20	188.72	89.257	19	27716
21	199.07	92.985	20	27614
22	209.46	96.608	21	27515
23	219.89	100.12	22	27419
24	230.35	103.53	23	27325
25	240.84	106.83	24	27235
26	251.37	110.02	25	27147
27	261.93	113.1	26	27063
28	272.53	116.07	27	26981
29	283.15	118.92	28	26902
30	293.81	121.67	29	26827
31	304.49	124.29	30	26754
32	315.2	126.8	31	26685
33	325.94	129.2	32	26619
34	336.7	131.47	33	26556
35	347.49	133.63	34	26496
36	358.3	135.67	35	26439
37	369.14	137.59	36	26386
38	379.99	139.39	37	26336
39	390.86	141.07	38	26289
40	401.75	142.63	39	26245
41	412.66	144.06	40	26205
42	423.58	145.37	41	26167
43	434.52	146.56	42	26134
44	445.47	147.63	43	26103
45	456.43	148.57	44	26076
46	467.41	149.38	45	26052
47	478.39	150.08	46	26032
48	489.37	150.64	47	26015
49	500.37	151.08	48	26002
50	511.36	151.4	49	25991
51	522.36	151.59	50	25985
52	533.36	151.65	51	25981
53	544.37	151.59	52	25981
54	555.37	151.4	53	25985
55	566.36	151.09	54	25991
56	577.36	150.65	55	26001
57	588.34	150.08	56	26015
58	599.32	149.39	57	26032
59	610.3	148.58	58	26052
60	621.26	147.64	59	26076
61	632.21	146.57	60	26103
62	643.15	145.39	61	26133
63	654.07	144.08	62	26167
64	664.98	142.64	63	26204
65	675.87	141.09	64	26244
66	686.74	139.41	65	26288
67	697.6	137.61	66	26335
68	708.43	135.69	67	26385
69	719.24	133.65	68	26439
70	730.03	131.5	69	26495
71	740.79	129.22	70	26555
72	751.53	126.83	71	26618

Copyright 1986-2024 Fitzroy Systems Ltd.

73	762.24	124.32	72	26684
74	772.93	121.69	73	26754
75	783.58	118.95	74	26826
76	794.21	116.1	75	26902
77	804.8	113.13	76	26980
78	815.36	110.05	77	27062
79	825.89	106.87	78	27146
80	836.39	103.57	79	27234
81	846.85	100.16	80	27324
82	857.27	96.644	81	27418
83	867.66	93.022	82	27514
84	878.01	89.295	83	27613
85	888.33	85.464	84	27715
86	898.6	81.53	85	27820
87	908.84	77.494	86	27928
88	919.03	73.358	87	28038
89	929.19	69.122	88	28151
90	939.3	64.787	89	28267
91	949.37	60.356	90	28385
92	959.4	55.829	91	28506
93	969.38	51.207	92	28630
94	979.32	46.492	93	28756
95	989.22	41.684	94	28884
96	999.07	36.786	95	29015
97	1008.9	31.798	96	29149
98	1018.6	26.722	97	29284
99	1028.3	21.558	98	29423
100	1038	16.308	99	29563
101	1047.6	10.974	100	29706

Copyright 1986-2024 Fitzroy Systems Ltd.

Location: Ex 11.1 from Matrices for Structural Analysis by SJ McMinn

Natural frequency of multi-storey frames

For frames in which the mass can be assumed to be lumped at floor levels, and where compression of columns and rotation of column heads may be considered negligible in comparison to sway effects, the period of the fundamental mode is given by:

$$T = 2.PI \sqrt{\frac{sigma(mi.xi^2)}{g.sigma(mi.xi)}}$$ Raleigh's formula

The method:
a) compute the sum of DL + 20% of imposed load for each floor and roof
b) apply these as a set of horizontal forces to the structure
c) substitute computed deflections and masses in Raleigh's formula to find T.

Number of levels n=3

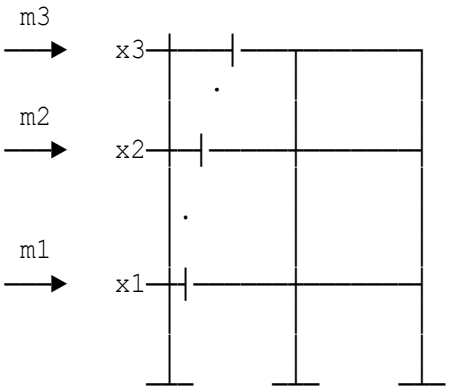

Ex.: if for a three storey frame, x1 x2 & x3 are the displacements corresponding to the set of masses m1 m2 & m3, then period is given by

$$T = 2.\pi \sqrt{\frac{m1.x1^2 + m2.x2^2 + m3.x3^2}{g(m1.x1 + m2.x2 + m3.x3)}}$$

where g is 9.8067 m/s²

Lumped mass at this level	m(1)=24.91 kN
Corresponding displacement	x(1)=0.017502 m
Lumped mass at this level	m(2)=23.216 kN
Corresponding displacement	x(2)=0.079553 m
Lumped mass at this level	m(3)=4.1849 kN
Corresponding displacement	x(3)=0.11911 m
Period	T=2*PI*SQR(sigmx2/(g*sigmx))
	=0.55645 sec
Natural frequency	f=1/T=1.7971 hertz

Location: Elastic critical load of column with end load

Formulas taken from 'Formulas for Stress and Strain' by Roark.
Elastic modulus of bar E=210E6 kN/m²
Moment of inertia of bar I=0.001 m⁴
Length of bar L=5 m

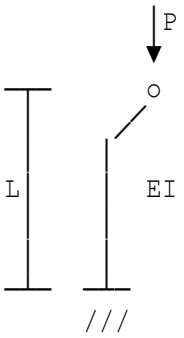

Uniform straight bar under end load, one end free, other end fixed.

Elastic critical load

P'=PI^2*E*I/(4*L^2)=20726 kN

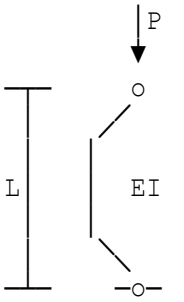

Uniform straight bar under end load, both ends pinned.

Elastic critical load

P'=PI^2*E*I/L^2=82905 kN

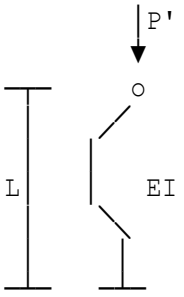

Uniform straight bar under end load, one end fixed, other end hinged and horizontally constrained over fixed end.

Elastic critical load

P'=PI^2*E*I/(0.7*L)^2=169193 kN

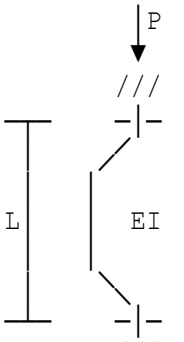

Uniform straight bar under end load, both ends fixed.

Elastic critical load

P'=4*PI^2*E*I/L^2=331619 kN

Elastic modulus	E=205E6 kN/m²
Poisson's ratio	v=0.3
Plate thickness	t=1 m
Plate dimension	a=1 m
	b=1 m
	c=1 m
	d=1 m
Downward deflection at position 1	w(1)=13.447E-6 m
Downward deflection at position 2	w(2)=13.714E-6 m
Downward deflection at position 3	w(3)=13.447E-6 m
Downward deflection at position 4	w(4)=13.714E-6 m
Downward deflection at position 5	w(5)=13.983E-6 m
Downward deflection at position 6	w(6)=13.714E-6 m
Downward deflection at position 7	w(7)=13.447E-6 m
Downward deflection at position 8	w(8)=13.714E-6 m
Downward deflection at position 9	w(9)=13.447E-6 m

Elastic modulus	E=0 kN/m²
Poisson's ratio	v=0
Plate thickness	t=8 m
Plate dimension	a=0.68007 m
	b=0.2 m
	c=0.1 m
	d=0.25 m
Downward deflection at position 1	w(1)=0.59863 m
Downward deflection at position 2	w(2)=0.48404 m
Downward deflection at position 3	w(3)=0.093208 m
Downward deflection at position 4	w(4)=2.0834 m
Downward deflection at position 5	w(5)=1.9428 m
Downward deflection at position 6	w(6)=1.4589 m
Downward deflection at position 7	w(7)=2.6041 m
Downward deflection at position 8	w(8)=2.4554 m
Downward deflection at position 9	w(9)=1.9428 m

Elastic modulus	E=0 kN/m²
Poisson's ratio	v=0
Plate thickness	t=8 m
Plate dimension	a=0.63632 m
	b=0.12 m
	c=0.1 m
	d=0.1 m
Downward deflection at position 1	w(1)=1.5123 m
Downward deflection at position 2	w(2)=1.3811 m
Downward deflection at position 3	w(3)=1.1434 m
Downward deflection at position 4	w(4)=2.0834 m
Downward deflection at position 5	w(5)=1.9428 m
Downward deflection at position 6	w(6)=1.6876 m
Downward deflection at position 7	w(7)=2.6041 m
Downward deflection at position 8	w(8)=2.4554 m
Downward deflection at position 9	w(9)=2.1852 m

Elastic modulus	E=0 kN/m²
Poisson's ratio	v=0
Plate thickness	t=8 m
Plate dimension	a=0.56569 m
	b=0.2 m
	c=0.25 m
	d=0.25 m
Downward deflection at position 1	w(1)=0.62072 m
Downward deflection at position 2	w(2)=0.48404 m
Downward deflection at position 3	w(3)=0.093208 m
Downward deflection at position 4	w(4)=2.1104 m
Downward deflection at position 5	w(5)=1.9428 m
Downward deflection at position 6	w(6)=1.4589 m
Downward deflection at position 7	w(7)=3.2902 m
Downward deflection at position 8	w(8)=3.1015 m
Downward deflection at position 9	w(9)=2.5547 m

Elastic modulus	E=205E6 kN/m²
Poisson's ratio	v=0.3
Plate thickness	t=8 m
Plate dimension	a=0.1 m
	b=0.1 m
	c=0.15 m
	d=0.15 m
Downward deflection at position 1	w(1)=0.019001 m
Downward deflection at position 2	w(2)=0.019929 m
Downward deflection at position 3	w(3)=0.019001 m
Downward deflection at position 4	w(4)=0.019813 m
Downward deflection at position 5	w(5)=0.020782 m
Downward deflection at position 6	w(6)=0.019813 m
Downward deflection at position 7	w(7)=0.019001 m
Downward deflection at position 8	w(8)=0.019929 m
Downward deflection at position 9	w(9)=0.019001 m

<H1>Location: Outside stringer coordinates

<H1>Polar to Cartesian coordinate conversion

```
            + j start joint number
 radius R /
        /  theta (+ve anticlockwise)
       ┌──────────────► X
       │
       │  Y comes out
       │  of the paper
       ▼
       Z
```

Radius	R=1.45 m
Initial angle	theta'=90°
Angle of each tread	alpha'=-20°
Number of treads	ntread=18
Initial joint number	j=1
Increment in joint number	inc=2
Initial level	y=0 m
Increment in level	riser=0.16 m

<H1>Location: Coordinates of circle in space, rotated about Y, Z & X axes

---

Radius	R=1 m
X final ordinate of centre	Xc=1 m
Y final ordinate of centre	Yc=1 m
Z final ordinate of centre	Zc=1 m
Rotation about X axis (deg)	beta=90°
Rotation about Y axis (deg)	psi1=90°
Rotation about Z axis (deg)	psi2=90°
Number of segments in circle	nseg=36
Angle subtended at centre	alpha=0.17453 radians

Joint 1 has maximum initial X ordinate, joints set out in anti-clockwise direction on plan (i.e. clockwise when looking in the Y direction). The centre of the circle is initially located at the origin and the coordinates of each joint computed for the rotations about the Y, Z & X axis in order. The coordinates are then translated so that the centre is at the required position.

Location: Example of horizontal I section rotated anticlockwise 45°

```
Point P          Point K end
(xp,yp,zp)       of member
 ┌──────────────┼(xk,yk,zk) ──▶ X
 │            /
 │          /
 │Z       /
 ▼      /length c
 │    /
 │  /
─┼─ Point J start of
    member (xj,yj,zj)
```

This procedure computes the angle 'beta' between the vertical plane through coordinates xj,yj,zj and xk,yk,zk and the plane defined by points J, K & P. X and Z axes are as shown Y comes out of the paper.

X coordinate of point J	xj=0 m
Y coordinate of point J	yj=-7.0711 m
Z coordinate of point J	zj=10 m
X coordinate of point K	xk=10 m
Y coordinate of point K	yk=-7.0711 m
Z coordinate of point K	zk=0 m
X coordinate of point P	xp=0 m
Y coordinate of point P	yp=0 m
Z coordinate of point P	zp=0 m

Location: Plane frame example

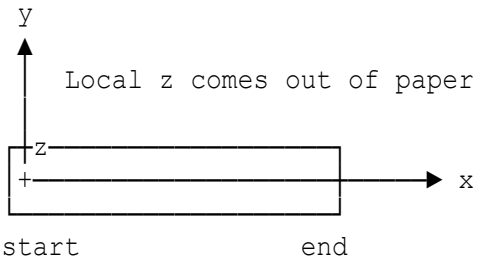

Plane frame member stiffness matrix for member axes

Three degrees of freedom at each end: displacements in x & y directions & rotation about z axis.

Modulus of elasticity	E=9E6 kN/m²
Modulus of rigidity (shearing)	G=562500 kN/m²
Cross sectional area of member	Ax=0.08 m²
Shear area (Ax*5/6 for rectangle)	Ay=0.066667 m²
Inertia about z axis	Iz=0.0010667 m⁴
Length of member	L=5 m
Spring stiffness at member start	Ks=10 kNm/r
Spring stiffness at member end	Ke=0 kNm/r

Member stiffness matrix for plane frame:

144000	0	0	-144000	0	0
0	0.39929	1.9964	0	-0.39929	0
0	1.9964	9.9821	0	-1.9964	0
-144000	0	0	144000	0	0
0	-0.39929	-1.9964	0	0.39929	0
0	0	0	0	0	0

Elastic-plastic analysis of compression members

In rigid-frame (non-triangulated) structures, bending moments arise as 'primary moments', whereas in rigid-jointed triangulated frames, loaded only at the joints, any bending moments arise only as 'secondary moments'. Results obtained from 'unit shape factor analysis', in which plastic deformation is assumed to be confined to discrete plastic 'hinges', have been found, both analytically and experimentally, to be of fully sufficient accuracy for rigid frames. For triangulated frames, in which the structural action of the members lies essentially in their resistance to axial forces, unit shape factor analysis may give results which are not sufficiently reliable. The reasons are as follows.

a) The presence of initial imperfections and residual stresses has an appreciable influence on the carrying capacities of members loaded in axial compression, whereas for members loaded primarily in bending (even when some compressive axial loading is also present) their effect explored analytically is small, and certainly overshadowed by the many variable effects due to other factors which arise in practice and experimentally.

b) Compression members may, at their maximum capacity load, have attained a state of only limited plasticity, without the formation anywhere of a plastic hinge. This is because partially penetrating plastic zones have so reduced the stiffness of the members of a frame that a state of critical buckling has been reached.

The following calculation derives the imperfection e to be applied at the centre of a member using Professor Horne's theory, and computes the coordinates at quarter points for a member having the imperfection e.

Coordinates of '3' points on a member having imperfection 'e'

```
             (xm,ym) M _ _ _ _ _ _ _ _ _ _ _ _ _ _ _ _ _ (x2,y2)
                     /|\                          _ -
                   /  | \e                 _  -    Member joints points
                 /    |  \           _  -           (x1,y1) and (x2,y2).
               /     D|___\  _  -__)theta           Undisplaced mid point
             /          _  -C                       of member is at C.
           /     _  -     (xc,yc)                   Displaced mid point is
         / _  -                                     M with coords xm,ym.
(x1,y1)/—                                           Length DC=e*sin(theta)
```

X coordinate of start of member	x1=0 mm
Y coordinate of start of member	y1=0 mm
X coordinate of end of member	x2=3000 mm
Y coordinate of end of member	y2=3000 mm
Modulus of elasticity	E=205000 N/mm²
Yield stress	py=350 N/mm²
Cross sectional area	A=3710 mm²
Inertia of section	I=16.3E6 mm⁴
Robertson constant	an=3

For e positive in local y direction as shown above:

```
Displaced 1/4 point coordinate    xq=(x1+xc)/2-0.75*e*(y2-y1)/L
                                    =744.78 mm
Displaced 1/4 point coordinate    yq=(y1+yc)/2+0.75*e*(x2-x1)/L
                                    =755.22 mm
Displaced mid-point coordinate    xm=(x2+x1)/2-e*(y2-y1)/L=1493 mm
Displaced mid-point coordinate    ym=(y2+y1)/2+e*(x2-x1)/L=1507 mm
Displaced 3/4 point coordinate    xt=(xc+x2)/2-0.75*e*(y2-y1)/L
                                    =2244.8 mm
Displaced 3/4 point coordinate    yt=(yc+y2)/2+0.75*e*(x2-x1)/L
                                    =2255.2 mm
```

For e negative in local y direction:

```
Displaced 1/4 point coordinate    xq=(x1+xc)/2+0.75*e*(y2-y1)/L
                                    =755.22 mm
Displaced 1/4 point coordinate    yq=(y1+yc)/2-0.75*e*(x2-x1)/L
                                    =744.78 mm
Displaced mid-point coordinate    xm=(x2+x1)/2+e*(y2-y1)/L=1507 mm
Displaced mid-point coordinate    ym=(y2+y1)/2-e*(x2-x1)/L=1493 mm
Displaced 3/4 point coordinate    xt=(xc+x2)/2+0.75*e*(y2-y1)/L
                                    =2255.2 mm
Displaced 3/4 point coordinate    yt=(yc+y2)/2-0.75*e*(x2-x1)/L
                                    =2244.8 mm
```

Equilibrium and compatibility check of plane frame/truss members

```
X coordinate at start of member   xcs=0
Y coordinate at start of member   ycs=2000
X coordinate at end of member     xce=0
Y coordinate at end of member     yce=4000
X displacement at start (GLOBAL)  Xds=78.13413
Y displacement at start (GLOBAL)  Yds=-1.54724
Z rotation at start (GLOBAL)      Zrs=-0.0318884
X displacement at end (GLOBAL)    Xde=113.47263
Y displacement at end (GLOBAL)    Yde=-1.879371
Z rotation at end (GLOBAL)        Zre=0
X force at start of member        fxs=991.0094
Y force at start of member        fys=517.5643
Z moment at start of member       mzs=-1.0768567E6
X force at end of member          fxe=-991.0094
Y force at end of member          fye=-517.5643
Z moment at end of member         mze=2.1119853E6
Elastic modulus                   e=100000
Shearing modulus                  g=0
Cross sectional area of member    ax=1000
Shear area of member              ay=0
Moment of inertia about Z axis    iz=1E6

Deflection in local x direction   xds=Cx*Xds+Cy*Yds=-0.16641324
                                  xde=Cx*Xde+Cy*Yde=0.12591862
Deflection in local y direction   yds=-Cy*Xds+Cx*Yds=-78.149271
                                  yde=-Cy*Xde+Cx*Yde=-113.48812
```

Equilibrium

```
Final length l=SQR((xce+Xde-xcs-Xds)^2+(yce+Yde-ycs-Yds)^2)=1999.9801
Net moment                        M=mzs+mze=1.0351286E6
Should balance start shear x length M'=fys*l=1.0351183E6
Percentage error                    p=100*(M-M')/M=0.99505629E-3 %
```

Flexure

From buildup of stiffness matrix in NL-STRESS Reference manual, taking into account shear deformation: mzs=EI/L + 3EI.S/L for unit rotation at the start, and mze=-EI/L+3EI.S/L for unit rotation at the end, where

the shear deformation coefficient, $S = \dfrac{1}{\left[1 + \dfrac{12EI}{L^2.G.Ay}\right]}$

```
For zero shear area take          s=1
Percentage error                  p=100*(theta-theta')/theta
                                   =-0.93234687E-3 %
```

Net length

```
Net length should be              L - PL/AE
Where L is original length        L=SQR((xce-xcs)^2+(yce-ycs)^2)=2000
Thus                              netl=L-fxs*L/(ax*e)=1999.9802
Analysis gives      netl'=SQR((xce+Xde-xcs-Xds)^2+(yce+Yde-ycs-Yds)^2)
                         =1999.9801
Percentage error                  p=100*(netl-netl')/netl=4.0469251E-6 %
```

Equilibrium and compatibility check of plane grid members

```
X coordinate at start of member   xcs=12.006
Y coordinate at start of member   ycs=0
X coordinate at end of member     xce=12.006
Y coordinate at end of member     yce=1.7393
X rotation at start of member     Xrs=-0.011072826
Y rotation at start of member     Yrs=0.005295661
Z displacement at start of member Zds=-0.15362974
X rotation at end of member       Xre=-0.014049463
Y rotation at end of member       Yre=0.006476447
Z displacement at end of member   Zde=-0.17480877
X moment at start of member       mxs=-10.1319
Y moment at start of member       mys=-67.9809
Z force at start of member        fzs=-62.8811
X moment at end of member         mxe=10.1319
Y moment at end of member         mye=177.3501
Z force at end of member          fze=62.8811
Elastic modulus                   e=10.5E6
Shearing modulus                  g=2.1E6
Torsion constant of member        ix=0.0079951805
Moment of inertia about Y axis    iy=0.0076795238
Shear area of member              az=0.20638333

Length of segment                 L=SQR((xce-xcs)^2+(yce-ycs)^2)=1.7393
Direction cosines                 Cx=(xce-xcs)/L=0
                                  Cy=(yce-ycs)/L=1
Rotation about local x axis       xrs=Cx*Xrs+Cy*Yrs=0.005295661
                                  xre=Cx*Xre+Cy*Yre=0.006476447
Rotation about local y axis       yrs=-Cy*Xrs+Cx*Yrs=0.011072826
                                  yre=-Cy*Xre+Cx*Yre=0.014049463
Deflection in local z direction   zds=Zds=-0.15362974
                                  zde=Zde=-0.17480877
```

Equilibrium

```
Final length                      l=SQR((xce-xcs)^2+(yce-ycs)^2)=1.7393
Net moment                        M=mys+mye=109.3692
Should balance end shear times length M'=fze*l=109.3691
Percentage error                  p=100*(M-M')/M=93.966126E-6 %
```

Flexure

From buildup of stiffness matrix in NL-STRESS Reference manual, taking into account shear deformation: mys=EI/L + 3EI.S/L for unit rotation at the start, and mye=-EI/L+3EI.S/L for unit rotation at the end, where

the shear deformation coefficient, $S = \dfrac{1}{\left[1 + \dfrac{12EI}{L^2.G.Az}\right]}$

```
Shear deformation coefficient     s=1/(1+12*e*iy/(l^2*g*az))=0.57537086
Percentage error                  p=100*(theta-theta')/theta
                                   =-12.500003 %
```

Net rotation

Net rotation should be	netr=T*L/GIx, where T is torque and
Ix is torsion constant, length	L=SQR((xce-xcs)^2+(yce-ycs)^2)=1.7393
Thus	netr=mxs*L/(ix*g)=-0.0010495855
Analysis gives	netr'=xrs-xre=-0.001180786
Percentage error	p=100*(netr-netr')/netr=-12.50022 %

Equilibrium and compatibility check of space frame/truss members

```
X coordinate at start of member   xcs=240
Y coordinate at start of member   ycs=120
Z coordinate at start of member   zcs=0
X coordinate at end of member     xce=360
Y coordinate at end of member     yce=0
Z coordinate at end of member     zce=120
X displacement at start (GLOBAL)  Xds=0.22201994
Y displacement at start (GLOBAL)  Yds=-0.48118948
Z displacement at start (GLOBAL)  Zds=-0.70160623
X displacement at end (GLOBAL)    Xde=0
Y displacement at end (GLOBAL)    Yde=0
Z displacement at end (GLOBAL)    Zde=0
X rotation at start (GLOBAL)      Xrs=-0.008024871
Y rotation at start (GLOBAL)      Yrs=0.001007657
Z rotation at start (GLOBAL)      Zrs=-0.00434716
X rotation at end (GLOBAL)        Xre=0
Y rotation at end (GLOBAL)        Yre=0
Z rotation at end (GLOBAL)        Zre=0
X force at start of member        fxs=1.4696
Y force at start of member        fys=-0.7149
Z force at start of member        fzs=-0.4798
X force at end of member          fxe=-1.4696
Y force at end of member          fye=0.7149
Z force at end of member          fze=0.4798
X moment at start of member       mxs=-37.0171
Y moment at start of member       mys=15.6888
Z moment at start of member       mzs=-53.2791
X moment at end of member         mxe=37.0171
Y moment at end of member         mye=84.0397
Z moment at end of member         mze=-95.3189
Elastic modulus                   e=30000
Shearing modulus                  g=12000
Cross sectional area of member    ax=11
Shear area area of member         ay=0
Shear area area of member         az=0
Torsion constant for member       ix=83
Moment of inertia about Y axis    iy=56
Moment of inertia about Z axis    iz=56
Deflection in local x             xds=Cx*Xds+Cy*Yds+Cz*Zds=-0.0027939167
                                  xde=Cx*Xde+Cy*Yde+Cz*Zde=0
Deflection in local y             yds=-Cx*Cy*Xds/c+c*Yds-Cy*Cz*Zds/c
                                     =-0.59012373
                                  yde=-Cx*Cy*Xde/c+c*Yde-Cy*Cz*Zde/c=0
Deflection in local z             zds=-Cz*Xds/c+0*Yds+Cx*Zds/c
                                     =-0.65179504
                                  zde=-Cz*Xde/c+0*Yde+Cx*Zde/c=0
Rotation about local x            xrs=Cx*Xrs+Cy*Yrs+Cz*Zrs=-0.0077285358
                                  xre=Cx*Xre+Cy*Yre+Cz*Zre=0
Rotation about local y            yrs=-Cx*Cy*Xrs/c+c*Yrs-Cy*Cz*Zrs/c
                                     =-0.0042004278
                                  yre=-Cx*Cy*Xre/c+c*Yre-Cy*Cz*Zre/c=0
Rotation about local z            zrs=-Cz*Xrs/c+0*Yrs+Cx*Zrs/c
                                     =0.0026341153
```

zre=-Cz*Xre/c+0*Yre+Cx*Zre/c=0

Net length

Net length should be L - PL/AE
Thus netl=L-fxs*L/(ax*e)=207.84517
Analysis gives
netl'=SQR((xce+Xde-xcs-Xds)^2+(yce+Yde-ycs-Yds)^2+(zce+Zde-zcs-Zds)^2)
=207.84703
Percentage error p=100*(netl-netl')/netl
=-0.89478292E-3 %

Net rotation

Net rotation should be netr=T*L/GIx, where T is torque and
Ix is torsion constant, length L=netl'=207.84703
Thus netr=mxs*L/(ix*g)=-0.0077247935
Analysis gives netr'=xrs-xre=-0.0077285358
Percentage error p=100*(netr-netr')/netr=-0.048445108 %

Equilibrium

Net moment about y axis M=mys+mye=99.7285
Should balance end shear x length M'=fze*l=99.725006
Percentage error p=100*(M-M')/M=0.0035040092 %
Net moment about z axis M=mzs+mze=-148.598
Should balance start shear x len M'=fys*l=-148.58984
Percentage error p=100*(M-M')/M=0.0054896383 %

Flexure about y axis

From buildup of stiffness matrix in NL-STRESS Reference manual, taking into account shear deformation: mys=EI/L + 3EI.S/L for unit rotation at the start, and mye=-EI/L+3EI.S/L for unit rotation at the end, where

the shear deformation coefficient, $S = \dfrac{1}{\left[1 + \dfrac{12EI}{L^2.G.Az}\right]}$

For zero shear area take s=1
Percentage error p=100*(theta-theta')/theta
=0.65529167 %

Flexure about z axis

From buildup of stiffness matrix in NL-STRESS Reference manual, taking into account shear deformation: mzs=EI/L + 3EI.S/L for unit rotation at the start, and mze=-EI/L+3EI.S/L for unit rotation at the end, where

the shear deformation coefficient, $S = \dfrac{1}{\left[1 + \dfrac{12EI}{L^2.G.Ay}\right]}$

For zero shear area take s=1
Percentage error p=100*(theta-theta')/theta
=-1.2907055 %

Location: Support displacements to model for guy pretension

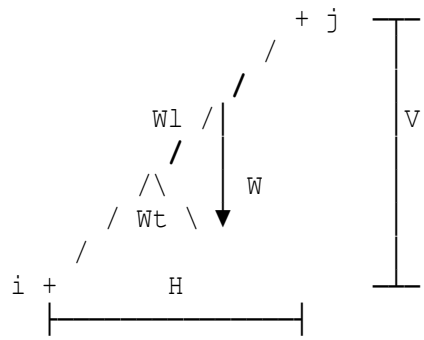

Support displacements to model for guy pretension

Guy joins joints i and j with start of guy at joint i.

Projection of guy onto horizontal	H=6 m
Projection of guy onto vertical	V=5 m
Cross sectional area of guy	A=18.4E-6 m²
Elastic modulus of guy	E=210E6 kN/m²
Tension applied to end i of guy	Ti=1 kN
Original length of guy	Lo=L-e=7.8083 m
Impose horizontal displacement	Dh=(Lo-L)*H/L=-0.0015309 m
Impose vertical displacement	Dv=(Lo-L)*V/L=-0.0012757 m

Therefore to model for average tension 1.0045 kN and vertical load 0.0018 kN/m run on the guy, apply joint displacements of -0.0015309 m in the horizontal direction and -0.0012757 m in the vertical direction assuming the guy was initially straight between i and j.

Location: Support displacements to model for guy pretension

Analysis of guyed structures using Non Linear STRESS

The analysis of structures such as guyed offshore platforms presents a special problem of modelling flexible members (guys) so that they may be analysed by the stiffness method.

NL-STRESS permits the effects of finite displacements to be taken into account in the analysis when METHOD SWAY is selected; NL-STRESS can therefore be used to analyse structures with attached guys. The stiff part of the structure is modelled in the normal way, but setting the NUMBER OF INCREMENTS to typically 20 (to apply the load in 20 increments) and the NUMBER OF SEGMENTS to 4 also (to divide each member in the structure — cables included — into 4 segments and thereby cater for 'within-member stability' effects).

Because NL-STRESS uses the stiffness method of analysis, each member must have some stiffness. Guys have small diameter in comparison to their length and stiffness is introduced by a guy diameter modelling (or magnification) factor denoted 's', typically having a value of 40. The elastic modulus for the guy is divided by s^2 so that the guy behaves in tension just as it would if unmodified.

It will be apparent that the introduction of stiffness to the guys will affect the tensile forces in them. The effects of bending stiffness are nullified by applying a compensating transverse UDL and balancing end point loads to each guy. A further calculation computes these compensating loads — the method was derived by Michael Horne.

The foot of guys are pretensioned to some value when the guy is subject only to its own self weight. The pretension is best modelled by applying JOINT DISPLACEMENTS at the foot of each guy.

Simple guy theory

If a cable is suspended between two points i and j, and subjected to a load transverse to the chord ij and evenly distributed along the cable length iOj then when the curve is flat the loading closely approximates to a U.D.L. and the curve to a parabola.

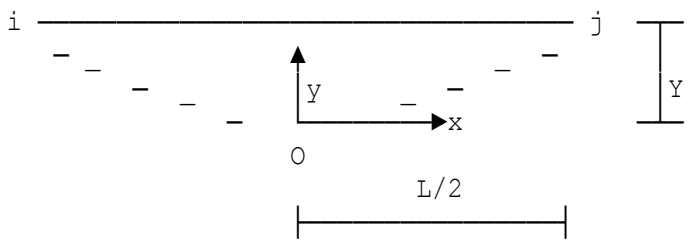

Assuming a parabolic shape, y=a.x^2

Limitation on s in terms of tension and guy properties

Projection of guy onto horizontal H=5 m
Projection of guy onto vertical V=5 m
Cross sectional area of guy A=18.4E-6 m²
Elastic modulus of guy E=210E6 kN/m²
Percentage error for 1st analysis p=5 %
Lowest expected tension in guy Tmin=1 kN

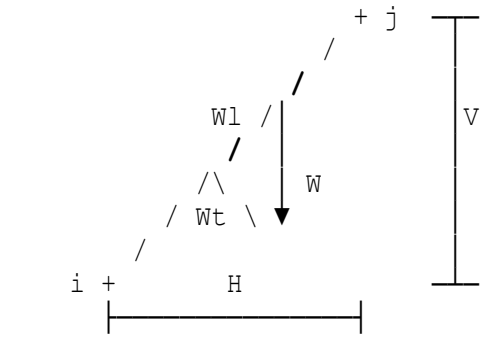

Support displacements to model for guy pretension

Guy joins joints i and j with start of guy at joint i.

Projection of guy onto horizontal H=5 m
Projection of guy onto vertical V=5 m
Cross sectional area of guy A=18.4E-6 m²
Elastic modulus of guy E=210E6 kN/m²
Tension applied to end i of guy Ti=1 kN
Original length of guy Lo=L-e=7.0693 m
Impose horizontal displacement Dh=(Lo-L)*H/L=-0.0012831 m
Impose vertical displacement Dv=(Lo-L)*V/L=-0.0012831 m

Therefore to model for average tension 1.0045 kN and vertical load 0.0018 kN/m run on the guy, apply joint displacements of -0.0012831 m in the horizontal direction and -0.0012831 m in the vertical direction assuming the guy was initially straight between i and j.

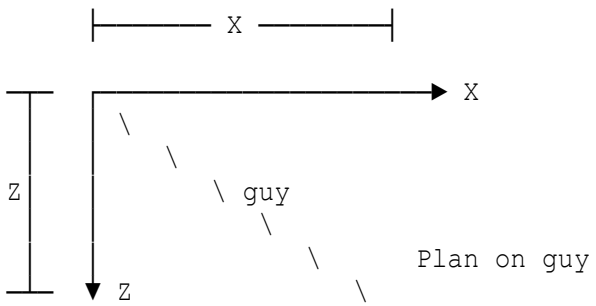

Guy projection on X axis (+ or -) X=3 m
Guy projection on Z axis (+ or -) Z=4 m
Impose displacement in X directn Dx=Dh*X/P=-0.76986E-3 m
Impose displacement in Z directn Dy=Dh*Z/P=-0.0010265 m

Location: Guy mark 1-3-5-7

Guy loading to model for artificial guy stiffness

```
                                   dYt   (dZt is positive when
                              dXt         out of the paper)
                            o------>
                          /
                        /
                     /dXm  dYm
                   o------>                  Y
                 /
               /
            /dXb  dYb
Z out of o------>        ------> X
   paper                                   Take bottom of guy as origin
          |------ X ------|                 of XYZ global axes then:
```

```
Initial X coord of top of guy     X=0 m
Initial Y coord of top of guy     Y=5 m
Initial Z coord of top of guy     Z=6 m
Displ in X dirn at bottom of guy  dXb=0 m
Displ in Y dirn at bottom of guy  dYb=-0.0012757 m
Displ in Z dirn at bottom of guy  dZb=-0.0015309 m
Defln in X dirn at top of guy     dXt=0.0010757 m
Defln in Y dirn at top of guy     dYt=-0.1014E-3 m
Defln in Z dirn at top of guy     dZt=0 m
Defln in X dirn at middle of guy  dXm=0.068287 m
Defln in Y dirn at middle of guy  dYm=-0.0049307 m
Defln in Z dirn at middle of guy  dZm=0.002754 m
Ignoring displacement component in local X direction as we are only
interested in transverse displacements.
Defln of middle of guy in local y dely=-Cx*Cy*delX/H+H*delY-Cy*Cz*delZ
                                       /H=-0.005512 m
                          local z delz=-Cz*delX/H+Cx*delZ/H=-0.067749 m
Elastic modulus for the guy       E=210E6 kN/m²
True diameter of the guy          d=0.0048402 m
Guy diameter modelling factor     s=20
Corrn transv loading in local Y   wfy=3.8*E*(d/L)^4*s^2*dely
                                     =-0.25952E-3 kN/m
Compensating end point loads      Wendy=-wfy*L/2=0.0010134 kN
Corrn transv loading in local Z   wfz=3.8*E*(d/L)^4*s^2*delz
                                     =-0.0031898 kN/m
Compensating end point loads      Wendz=-wfz*L/2=0.012456 kN
```

<H1>Location: Typical beam for temporary works

Location: Roof and snow loading

Snow loading on roof structures to BS6399-3:1988 (Inc amend't 3)

Basic snow load Sb=0.5 kN/m²
Site altitude is less than 100 m above mean sea level.
Site snow load So=Sb=0.5 kN/m²

Symmetrical pitched Roof

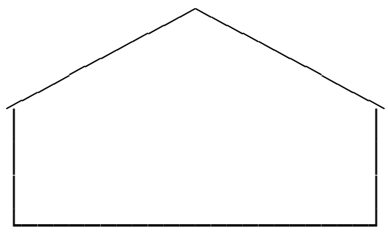

Roof section

Symmetrical pitched roof where the angle of pitch is > 15°.

For symmetrical roofs with pitches > 15° two load types are to be considered.

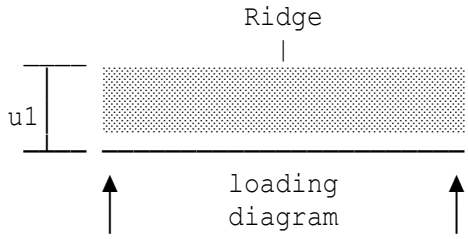

CASE 1: Uniform load over whole roof.

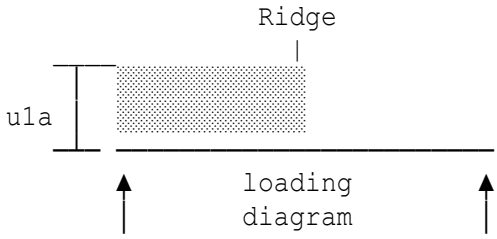

CASE 2: Uniform load over one half of roof only.

The value of the snow load shape coefficient u1 is dependent upon the angle of pitch of the roof measured from the horizontal. This coefficient u1 is considered to be constant across the whole roof in load case 1 and in load case 2 the coefficient u1a is considered to act on one half of the roof.

Angle of pitch of the roof α° alpha=16°

Snow loading

Location:

NOTE: For roofs of more than two spans b3 is the largest stretch
of roof away from the taller ridge.

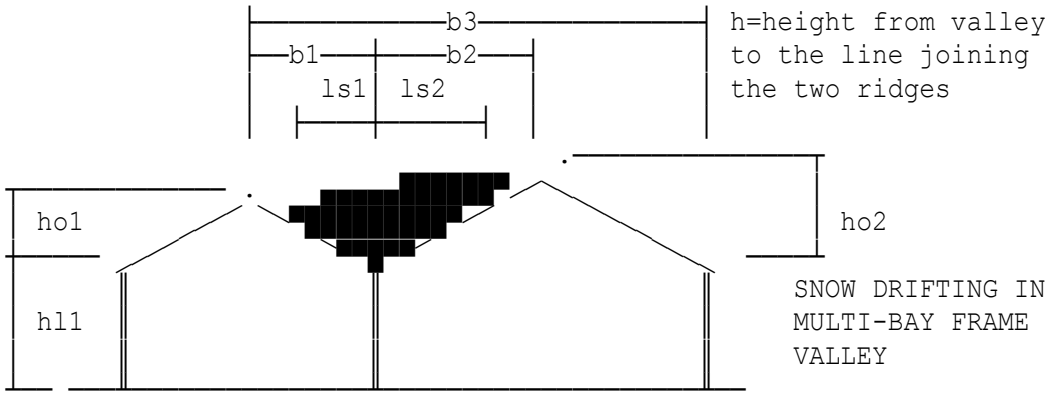

Snow drift profile extends as a sloping line between the ridges.
Height h is the depth of snow at the valley line.

Frame 1 half span length	b1=10 m
Frame 2 half span length	b2=20 m
Max ridge to outer eaves length	b3=50 m
Frame 1 Valley to ridge height	ho1=2.5 m
Frame 2 Valley to ridge height	ho2=3.2 m

Location: Roof and snow loading

Snow loading on roof structures to BS6399-3:1988 (Inc amend't 3)

Basic snow load Sb=0.8 kN/m²
Site altitude is less than 100 m above mean sea level.
Site snow load So=Sb=0.8 kN/m²

Symmetrical pitched Roof

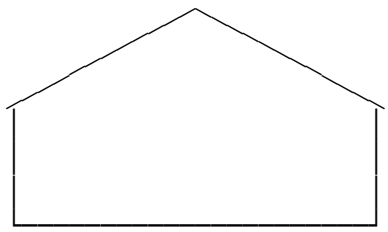

Roof section

Symmetrical pitched roof where the angle of pitch is > 15°.

For symmetrical roofs with pitches > 15° two load types are to be considered.

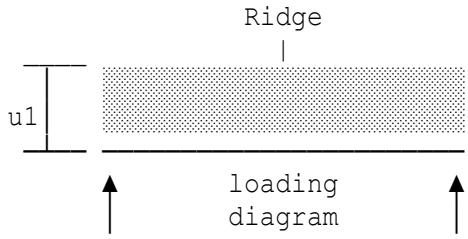

CASE 1: Uniform load over whole roof.

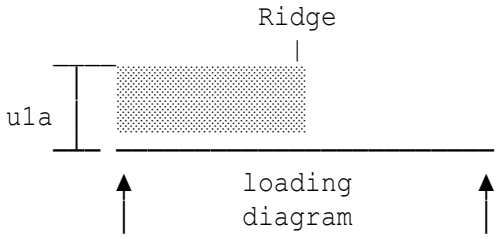

CASE 2: Uniform load over one half of roof only.

The value of the snow load shape coefficient u1 is dependent upon the angle of pitch of the roof measured from the horizontal. This coefficient u1 is considered to be constant across the whole roof in load case 1 and in load case 2 the coefficient u1a is considered to act on one half of the roof.

Angle of pitch of the roof α° alpha=75°

Location: Roof and snow loading

Snow loading on roof structures to BS6399-3:1988 (Inc amend't 3)

Basic snow load Sb=0.8 kN/m²
Site altitude is less than 100 m above mean sea level.
Site snow load So=Sb=0.8 kN/m²

Asymmetrical pitched Roof

The value of the snow load shape coefficient u1 is dependent upon the angle of pitch of the roof measured from the horizontal.

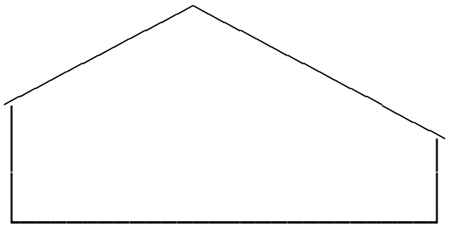

Asymmetrical pitched roof.

Roof section

CASE 1: Uniform load - BS6399-3:1988 Clause 7.2.3.2

Left side of roof:
Angle of left pitch of roof lalpha=75°
Slope of roof is greater than 60° therefore the shape coefficient is zero and the snow loading is zero on this side of the roof.
Snow load shape coefficient u1L=0
Snow load on left side of roof Sd1=u1L*So=0 kN/m²

Right side of roof:
Angle of right pitch of roof ralpha=25°
Snow load shape coefficient u1R=0.8
Snow load on right side of roof Sd2=u1R*So=0.64 kN/m²

Summary of loading

CASE 1: Uniform load

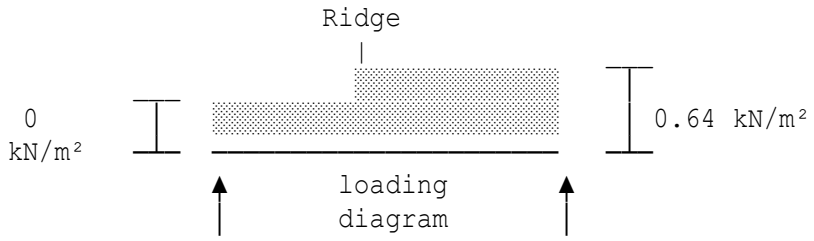

CASE 2: Asymmetric load (only the left side of roof loaded)

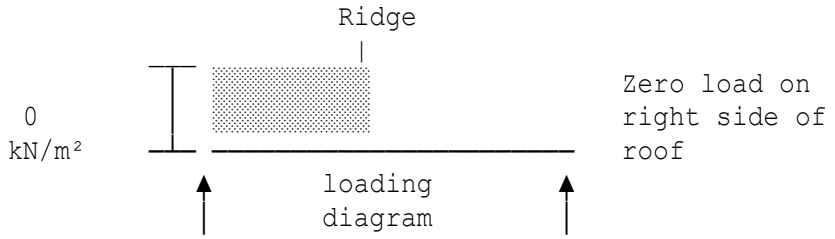

CASE 3: Asymmetric load (only the right side of roof loaded)

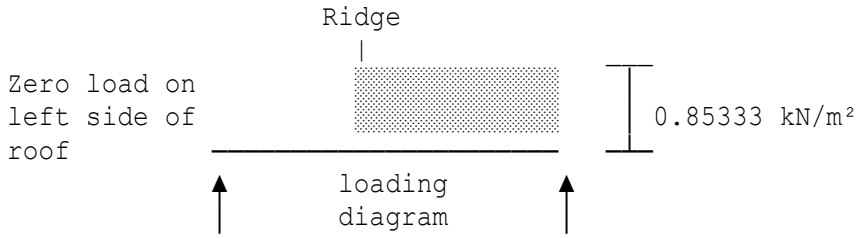

Location: Roof and snow loading

Snow loading on roof structures to BS6399-3:1988 (Inc amend't 3)

Basic snow load Sb=0.5 kN/m²
Site altitude is less than 100 m above mean sea level.
Site snow load So=Sb=0.5 kN/m²

Symmetrical pitched Roof

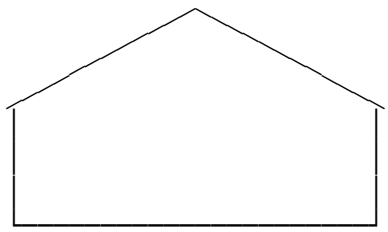

Roof section

Symmetrical pitched roof where the angle of pitch is > 15°.

For symmetrical roofs with pitches > 15° two load types are to be considered.

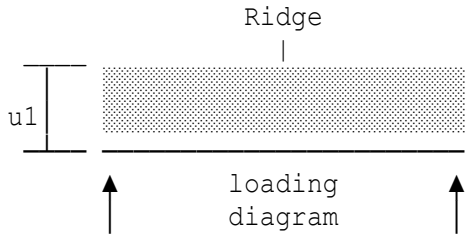

CASE 1: Uniform load over whole roof.

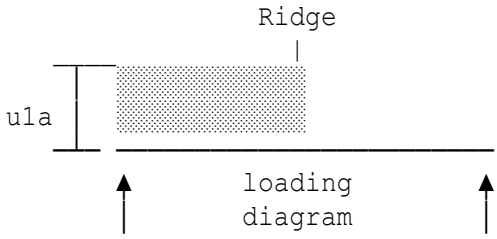

CASE 2: Uniform load over one half of roof only.

The value of the snow load shape coefficient u1 is dependent upon the angle of pitch of the roof measured from the horizontal. This coefficient u1 is considered to be constant across the whole roof in load case 1 and in load case 2 the coefficient u1a is considered to act on one half of the roof.

Angle of pitch of the roof α° alpha=16°

Location:

Difference in eaves levels	ho1=5 m
Length of lower building(s)	b1=30 m
Width of higher building	b2=10 m
Length of lower building	b3=10 m
Low level roof slope	alpha6=15°

Location: Roof and snow loading

Snow loading on roof structures to BS6399-3:1988 (Inc amend't 3)

Basic snow load Sb=0.5 kN/m²
Site altitude is less than 100 m above mean sea level.
Site snow load So=Sb=0.5 kN/m²

Symmetrical pitched Roof

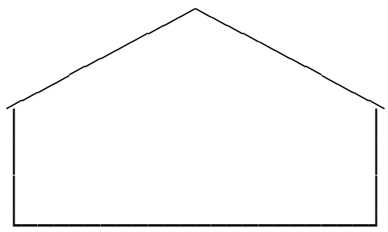

Roof section

Symmetrical pitched roof where the angle of pitch is > 15°.

For symmetrical roofs with pitches > 15° two load types are to be considered.

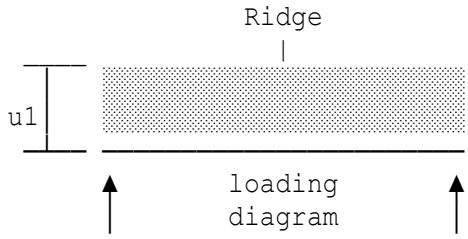

CASE 1: Uniform load over whole roof.

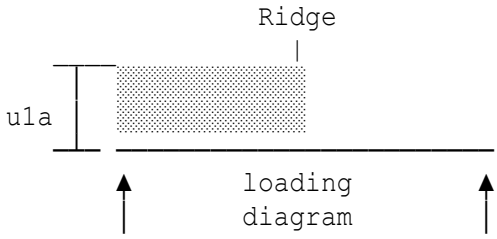

CASE 2: Uniform load over one half of roof only.

The value of the snow load shape coefficient u1 is dependent upon the angle of pitch of the roof measured from the horizontal. This coefficient u1 is considered to be constant across the whole roof in load case 1 and in load case 2 the coefficient u1a is considered to act on one half of the roof.

Angle of pitch of the roof α° alpha=16°

Location:

Difference in eaves levels	ho1=2.5 m
Length of lower building(s)	b1=10 m
Width of higher building	b2=20 m
Angle of pitch of low level roof	alpha7=30°

Location: Roof and snow loading

Snow loading on roof structures to BS6399-3:1988 (Inc amend't 3)

Basic snow load Sb=0.5 kN/m²
Site altitude is less than 100 m above mean sea level.
Site snow load So=Sb=0.5 kN/m²

Symmetrical pitched Roof

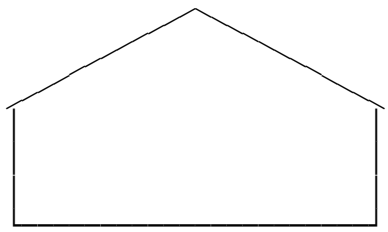

Roof section

Symmetrical pitched roof where the angle of pitch is > 15°.

For symmetrical roofs with pitches > 15° two load types are to be considered.

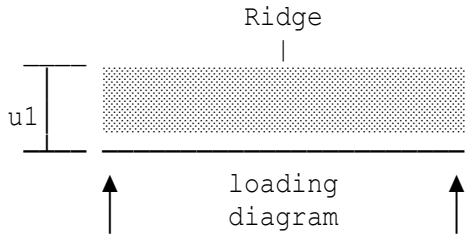

CASE 1: Uniform load over whole roof.

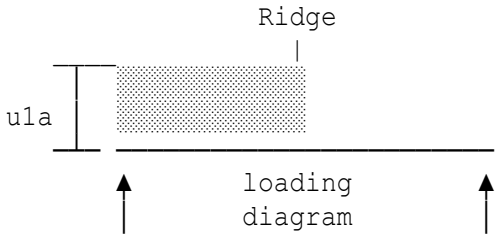

CASE 2: Uniform load over one half of roof only.

The value of the snow load shape coefficient u1 is dependent upon the angle of pitch of the roof measured from the horizontal. This coefficient u1 is considered to be constant across the whole roof in load case 1 and in load case 2 the coefficient u1a is considered to act on one half of the roof.

Angle of pitch of the roof α° alpha=16°

Location:

Difference in eaves levels	ho1=2.5 m
Length of lower building(s)	b1=10 m
Width of higher building	b2=20 m
Angle of pitch of low level roof	alpha7=30°

Location: Roof and snow loading

Snow loading on roof structures to BS6399-3:1988 (Inc amend't 3)

Basic snow load Sb=0.5 kN/m²
Site altitude is less than 100 m above mean sea level.
Site snow load So=Sb=0.5 kN/m²

Flat or Monopitch Roof

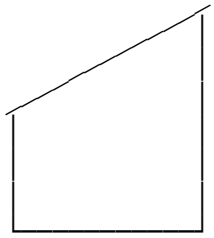

Roof section

Flat or monopitch roof where the angle of pitch is α°.

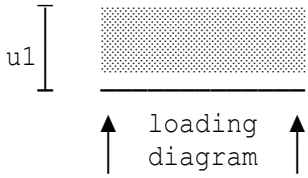

A single load case of a uniform layer of snow across the whole roof will be considered.

The value of the snow load shape coefficient u1 is dependent upon the angle of pitch of the roof measured from the horizontal.
This coefficient is considered to be constant across the whole roof
Angle of pitch of the roof α° alpha=16°

Location:

Difference in eaves levels	ho1=2.5 m
Length of lower building(s)	b1=10 m
Width of higher building	b2=20 m

Location: Roof and snow loading

Snow loading on roof structures to BS6399-3:1988 (Inc amend't 3)

Basic snow load Sb=0.5 kN/m²
Site altitude is less than 100 m above mean sea level.
Site snow load So=Sb=0.5 kN/m²

Flat or Monopitch Roof

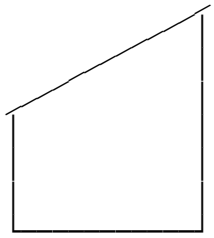

Roof section

Flat or monopitch roof where the angle of pitch is α°.

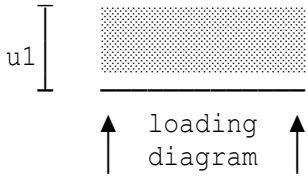

A single load case of a uniform layer of snow across the whole roof will be considered.

The value of the snow load shape coefficient u1 is dependent upon the angle of pitch of the roof measured from the horizontal.
This coefficient is considered to be constant across the whole roof
Angle of pitch of the roof α° alpha=16°

Location:

Difference in eaves levels	ho1=2.5 m
Length of lower building(s)	b1=10 m
Width of higher building	b2=20 m

Location: Roof and Snow loading

Snow loading on roof structures to BS6399-3:1988 (Inc amend't 3)

Basic snow load Sb=0.5 kN/m²
Site altitude is less than 100 m above mean sea level.
Site snow load So=Sb=0.5 kN/m²

Flat or Monopitch Roof

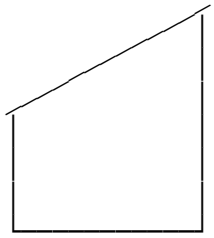

Roof section

Flat or monopitch roof where the angle of pitch is α°.

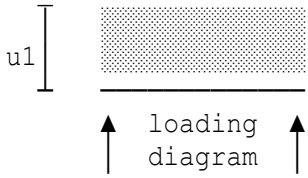

A single load case of a uniform layer of snow across the whole roof will be considered.

The value of the snow load shape coefficient u1 is dependent upon the angle of pitch of the roof measured from the horizontal.
This coefficient is considered to be constant across the whole roof
Angle of pitch of the roof α° alpha=16°

Location:

Parapet height	ho1=2.5 m
Length of building	b1=10 m
Low level roof slope	alpha6=12.5°

Location: Roof and snow loading

Snow loading on roof structures to BS6399-3:1988 (Inc amend't 3)

Basic snow load Sb=0.5 kN/m²
Site altitude is less than 100 m above mean sea level.
Site snow load So=Sb=0.5 kN/m²

Flat or Monopitch Roof

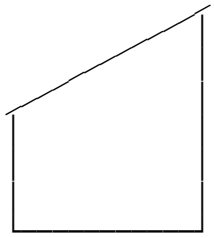

Roof section

Flat or monopitch roof where the angle of pitch is α°.

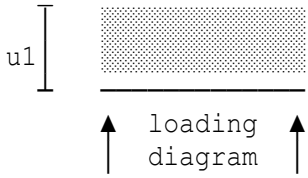

A single load case of a uniform layer of snow across the whole roof will be considered.

The value of the snow load shape coefficient u1 is dependent upon the angle of pitch of the roof measured from the horizontal.
This coefficient is considered to be constant across the whole roof
Angle of pitch of the roof α° alpha=16°

Location:

Parapet height	ho1=2.5 m
Length of building	b1=10 m

Location: Roof and snow loading

Snow loading on roof structures to BS6399-3:1988 (Inc amend't 3)

Basic snow load Sb=0.5 kN/m²
Site altitude is less than 100 m above mean sea level.
Site snow load So=Sb=0.5 kN/m²

Symmetrical pitched Roof

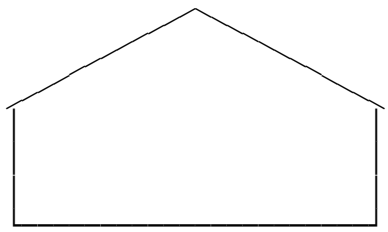

Roof section

Symmetrical pitched roof where the angle of pitch is > 15°.

For symmetrical roofs with pitches > 15° two load types are to be considered.

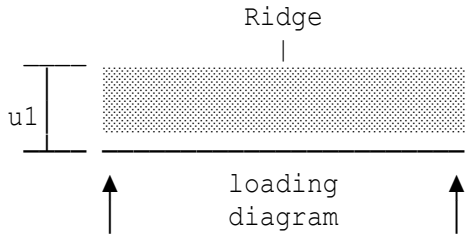

CASE 1: Uniform load over whole roof.

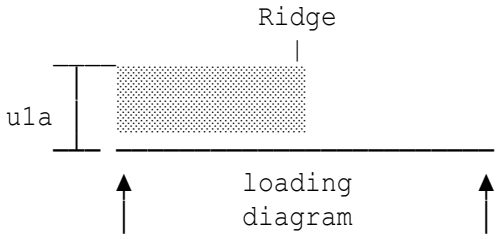

CASE 2: Uniform load over one half of roof only.

The value of the snow load shape coefficient u1 is dependent upon the angle of pitch of the roof measured from the horizontal. This coefficient u1 is considered to be constant across the whole roof in load case 1 and in load case 2 the coefficient u1a is considered to act on one half of the roof.

Angle of pitch of the roof α° alpha=16°

Copyright 1986-2024 Fitzroy Systems Ltd.

Location:

Parapet height	ho1=2.5 m
Parapet to ridge length	b1=10 m
Building width	b2=20 m

Location: Roof and snow loading

Snow loading on roof structures to BS6399-3:1988 (Inc amend't 3)

Basic snow load Sb=0.5 kN/m²
Site altitude is less than 100 m above mean sea level.
Site snow load So=Sb=0.5 kN/m²

Symmetrical pitched Roof

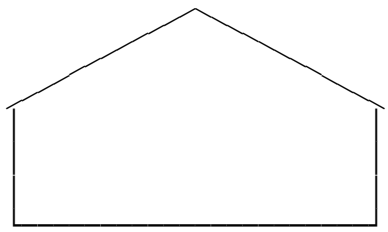

Roof section

Symmetrical pitched roof where the angle of pitch is > 15°.

For symmetrical roofs with pitches > 15° two load types are to be considered.

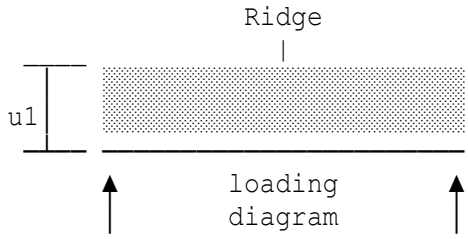

CASE 1: Uniform load over whole roof.

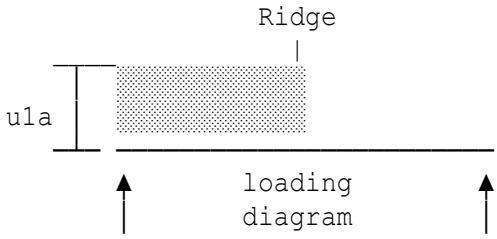

CASE 2: Uniform load over one half of roof only.

The value of the snow load shape coefficient u1 is dependent upon the angle of pitch of the roof measured from the horizontal. This coefficient u1 is considered to be constant across the whole roof in load case 1 and in load case 2 the coefficient u1a is considered to act on one half of the roof.

Angle of pitch of the roof α° alpha=16°

Location:

Eaves to ridge height	ho1=2.5 m
	b1=20 m
	b2=10 m
Slope of roof to building B	alpha=16°
	h=TAN(RAD(alpha))*(ls12/ls1_2)
	=1.0753 m

Location: Roof and snow loading

Snow loading on roof structures to BS6399-3:1988 (Inc amend't 3)

Basic snow load Sb=0.5 kN/m²
Site altitude is less than 100 m above mean sea level.
Site snow load So=Sb=0.5 kN/m²

Flat or Monopitch Roof

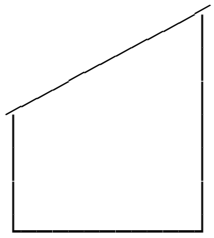

Roof section

Flat or monopitch roof where the angle of pitch is α°.

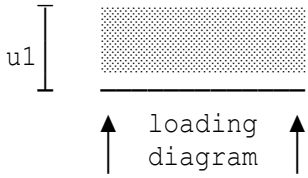

A single load case of a uniform layer of snow across the whole roof will be considered.

The value of the snow load shape coefficient u1 is dependent upon the angle of pitch of the roof measured from the horizontal.
This coefficient is considered to be constant across the whole roof
Angle of pitch of the roof α° alpha=16°

Location:

Left side obstruction height	ho1=2.5 m
Roof Length to left side	b1=10 m
Right side obstruction height	ho2=2 m
Roof Length to right side	b2=20 m

Location: Roof and snow loading

Snow loading on roof structures to BS6399-3:1988 (Inc amend't 3)

Basic snow load Sb=0.5 kN/m²
Site altitude is less than 100 m above mean sea level.
Site snow load So=Sb=0.5 kN/m²

Symmetrical pitched Roof

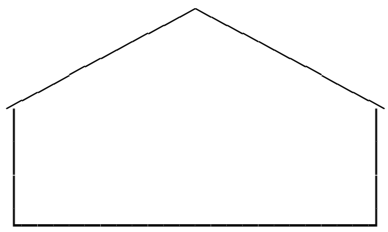

Roof section

Symmetrical pitched roof where the angle of pitch is > 15°.

For symmetrical roofs with pitches > 15° two load types are to be considered.

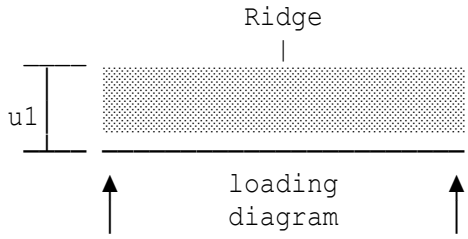

CASE 1: Uniform load over whole roof.

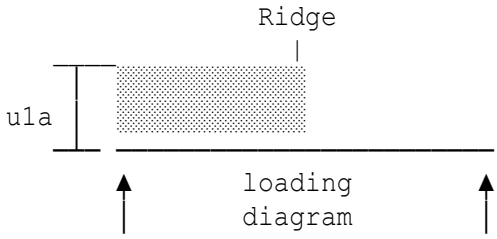

CASE 2: Uniform load over one half of roof only.

The value of the snow load shape coefficient u1 is dependent upon the angle of pitch of the roof measured from the horizontal. This coefficient u1 is considered to be constant across the whole roof in load case 1 and in load case 2 the coefficient u1a is considered to act on one half of the roof.

Angle of pitch of the roof α° alpha=16°

Location:

Left side obstruction height	ho1=2.5 m
Roof Length to left side	b1=10 m
Right side obstruction height	ho2=2 m
Roof Length obstruct. to ridge	b2=5 m
Obstruction to right Wall	b3=20 m

Location: Roof and snow loading

Snow loading on roof structures to BS6399-3:1988 (Inc amend't 3)

Basic snow load Sb=0.5 kN/m²
Site altitude is less than 100 m above mean sea level.
Site snow load So=Sb=0.5 kN/m²

Flat or Monopitch Roof

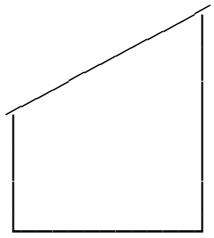

Roof section

Flat or monopitch roof where the angle of pitch is α°.

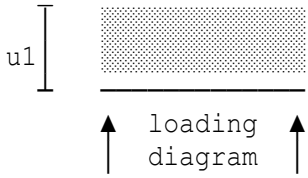

A single load case of a uniform layer of snow across the whole roof will be considered.

The value of the snow load shape coefficient u1 is dependent upon the angle of pitch of the roof measured from the horizontal.
This coefficient is considered to be constant across the whole roof
Angle of pitch of the roof α° alpha=16°

Location:

Canopy to roof height	ho1=2.5 m
Span of canopy	b1=2 m
Length of building	b2=10 m

Location: Roof and snow loading

Snow loading on roof structures to BS EN 1991-1-3:2003

Ground snow load at 100m a.m.s.l Sb=0.5 kN/m²
Site altitude is less than 100 m above mean sea level.
Characteristic ground snow load Sk=0.5 kN/m²
For UK designs the following exposure and thermal coefficient values as per Clauses NA.2.15 and NA.2.16 in the NA to BS EN 1991-1-3:2003 will be adopted for all topographies and all roofing materials:
Exposure coefficient Ce=1.0
Thermal coefficient Ct=1.0

Symmetrical pitched Roof

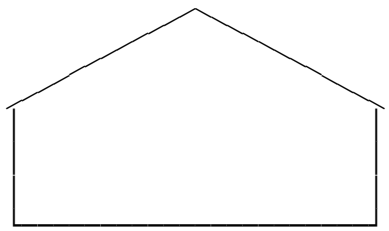

Roof section

Two load types will be considered. The pitch angle is > 15°

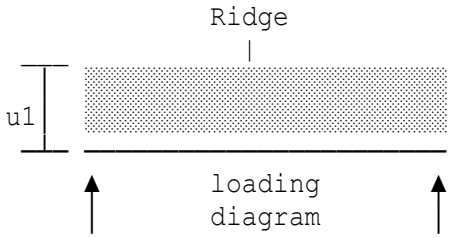

CASE 1: Uniform load over whole roof

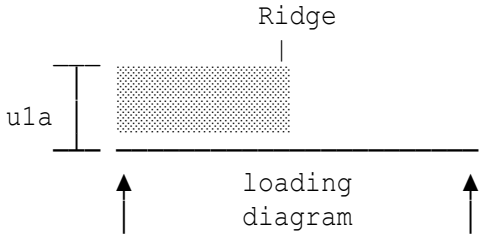

CASE 2: Uniform load over half the roof only

The value of the snow load shape coefficient u1 is dependent upon the angle of pitch of the roof measured from the horizontal. This coefficient u1 is considered to be constant across the whole roof in load case 1 and in load case 2 the coefficient u1a is considered to act over half the roof only.

Angle of roof pitch α°	alpha=16°
Location:	
Frame 1 half span length	b1=10 m
Frame 2 half span length	b2=20 m
Max ridge to outer eaves length	b3=50 m
Frame 1 Valley to ridge height	ho1=2.5 m
Frame 2 Valley to ridge height	ho2=3.2 m

Location: Roof and snow loading

Snow loading on roof structures to BS EN 1991-1-3:2003

Ground snow load at 100m a.m.s.l Sb=0.8 kN/m²
Site altitude is less than 100 m above mean sea level.
Characteristic ground snow load Sk=0.8 kN/m²
For UK designs the following exposure and thermal coefficient values as per Clauses NA.2.15 and NA.2.16 in the NA to BS EN 1991-1-3:2003 will be adopted for all topographies and all roofing materials:
Exposure coefficient Ce=1.0
Thermal coefficient Ct=1.0

Symmetrical pitched Roof

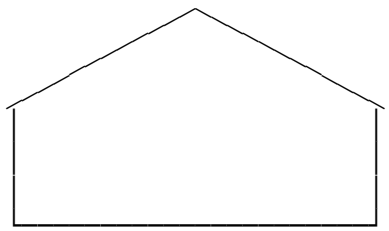

Roof section

Two load types will be considered. The pitch angle is > 15°

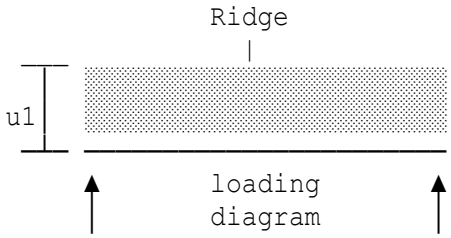

CASE 1: Uniform load over whole roof

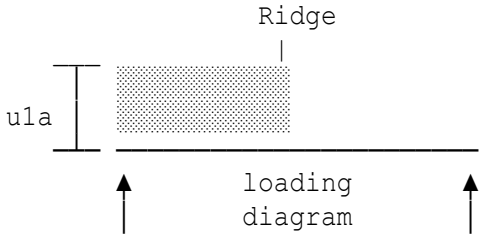

CASE 2: Uniform load over half the roof only

The value of the snow load shape coefficient u1 is dependent upon the angle of pitch of the roof measured from the horizontal. This coefficient u1 is considered to be constant across the whole roof in load case 1 and in load case 2 the coefficient u1a is considered to act over half the roof only.

Copyright 1986-2024 Fitzroy Systems Ltd.

Angle of roof pitch α° alpha=75°

Location: Roof and snow loading

Snow loading on roof structures to BS EN 1991-1-3:2003

Ground snow load at 100m a.m.s.l Sb=0.8 kN/m²
Site altitude is less than 100 m above mean sea level.
Characteristic ground snow load Sk=0.8 kN/m²
For UK designs the following exposure and thermal coefficient values as per Clauses NA.2.15 and NA.2.16 in the NA to BS EN 1991-1-3:2003 will be adopted for all topographies and all roofing materials:
Exposure coefficient Ce=1.0
Thermal coefficient Ct=1.0

Asymmetrical pitched roof

The value of the snow load shape coefficient u1 is dependent upon the angle of pitch of the roof measured from the horizontal.

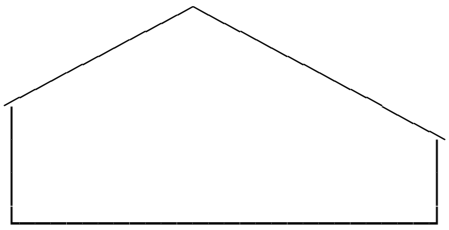

Asymmetrical pitched roof

Roof section

Angle of left roof pitch lalpha=75°
Angle of right roof pitch ralpha=25°

Location: Roof and snow loading

Snow loading on roof structures to BS EN 1991-1-3:2003

Ground snow load at 100m a.m.s.l Sb=0.5 kN/m²
Site altitude is less than 100 m above mean sea level.
Characteristic ground snow load Sk=0.5 kN/m²
For UK designs the following exposure and thermal coefficient values as per Clauses NA.2.15 and NA.2.16 in the NA to BS EN 1991-1-3:2003 will be adopted for all topographies and all roofing materials:
Exposure coefficient Ce=1.0
Thermal coefficient Ct=1.0

Symmetrical pitched Roof

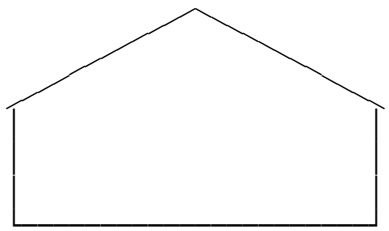

Roof section

Two load types will be considered. The pitch angle is > 15°

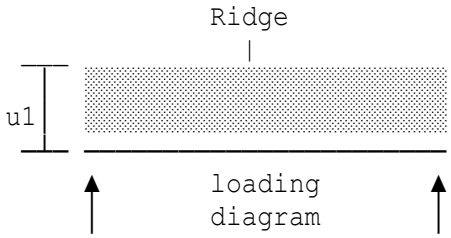

CASE 1: Uniform load over whole roof

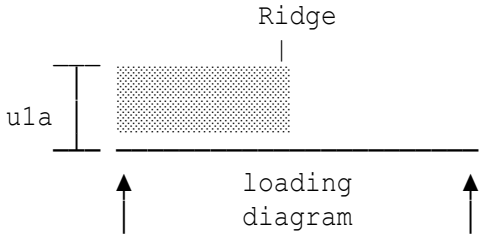

CASE 2: Uniform load over half the roof only

The value of the snow load shape coefficient u1 is dependent upon the angle of pitch of the roof measured from the horizontal. This coefficient u1 is considered to be constant across the whole roof in load case 1 and in load case 2 the coefficient u1a is considered to act over half the roof only.

Angle of roof pitch α°	alpha=16°
Location:	
Difference in eaves levels	ho1=5 m
Length of lower building(s)	b1=30 m
Width of higher building	b2=10 m
Length of lower building	b3=10 m
Low level roof slope	alpha6=15°

Location: Roof and snow loading

Snow loading on roof structures to BS EN 1991-1-3:2003

Ground snow load at 100m a.m.s.l Sb=0.5 kN/m²
Site altitude is less than 100 m above mean sea level.
Characteristic ground snow load Sk=0.5 kN/m²
For UK designs the following exposure and thermal coefficient values as per Clauses NA.2.15 and NA.2.16 in the NA to BS EN 1991-1-3:2003 will be adopted for all topographies and all roofing materials:
Exposure coefficient Ce=1.0
Thermal coefficient Ct=1.0

Symmetrical pitched Roof

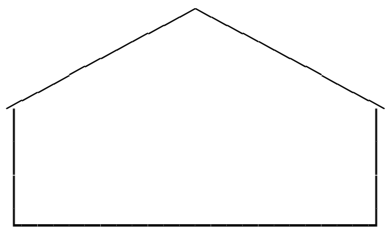

Roof section

Two load types will be considered. The pitch angle is > 15°

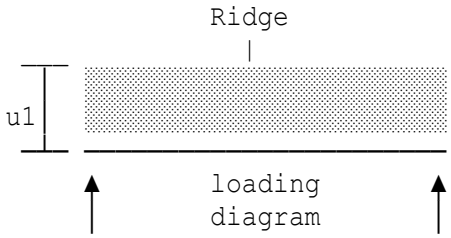

CASE 1: Uniform load over whole roof

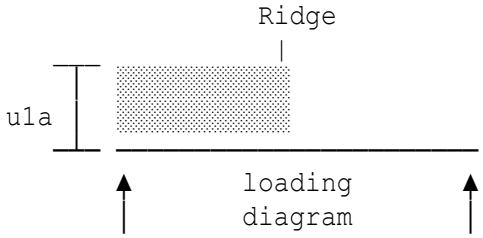

CASE 2: Uniform load over half the roof only

The value of the snow load shape coefficient u1 is dependent upon the angle of pitch of the roof measured from the horizontal. This coefficient u1 is considered to be constant across the whole roof in load case 1 and in load case 2 the coefficient u1a is considered to act over half the roof only.

Angle of roof pitch α°	alpha=16°
Location:	
Difference in eaves levels	ho1=2.5 m
Length of lower building(s)	b1=10 m
Width of higher building	b2=20 m
Angle of pitch of low level roof	alpha7=30°

Location: Roof and snow loading

Snow loading on roof structures to BS EN 1991-1-3:2003

Ground snow load at 100m a.m.s.l Sb=0.5 kN/m²
Site altitude is less than 100 m above mean sea level.
Characteristic ground snow load Sk=0.5 kN/m²
For UK designs the following exposure and thermal coefficient values as per Clauses NA.2.15 and NA.2.16 in the NA to BS EN 1991-1-3:2003 will be adopted for all topographies and all roofing materials:
Exposure coefficient Ce=1.0
Thermal coefficient Ct=1.0

Symmetrical pitched Roof

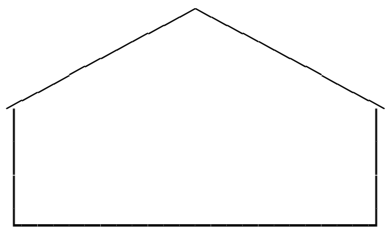

Roof section

Two load types will be considered. The pitch angle is > 15°

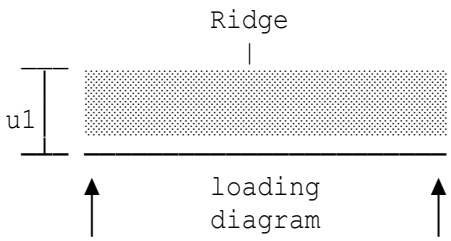

CASE 1: Uniform load over whole roof

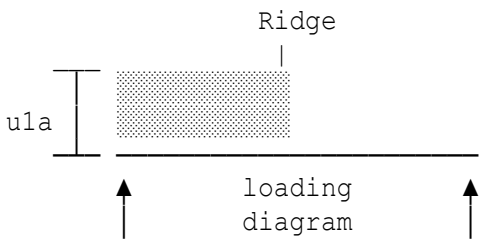

CASE 2: Uniform load over half the roof only

The value of the snow load shape coefficient u1 is dependent upon the angle of pitch of the roof measured from the horizontal. This coefficient u1 is considered to be constant across the whole roof in load case 1 and in load case 2 the coefficient u1a is considered to act over half the roof only.

Angle of roof pitch α°	alpha=16°
Location:	
Difference in eaves levels	ho1=2.5 m
Length of lower building(s)	b1=10 m
Width of higher building	b2=20 m
Angle of pitch of low level roof	alpha7=30°

Location: Roof and snow loading

Snow loading on roof structures to BS EN 1991-1-3:2003

Ground snow load at 100m a.m.s.l Sb=0.5 kN/m²
Site altitude is less than 100 m above mean sea level.
Characteristic ground snow load Sk=0.5 kN/m²
For UK designs the following exposure and thermal coefficient values as per Clauses NA.2.15 and NA.2.16 in the NA to BS EN 1991-1-3:2003 will be adopted for all topographies and all roofing materials:
Exposure coefficient Ce=1.0
Thermal coefficient Ct=1.0

Flat or monopitch roof - BS EN 1991-1-3:2003, Table 5.2

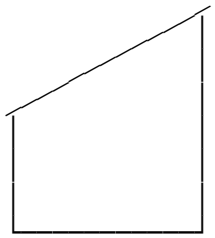

Roof section

Flat or monopitch roof where the pitch angle is α°

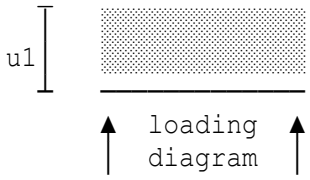

For this type of roof it is necessary to consider a single load case of a uniform layer of snow across the whole roof

The value of the snow load shape coefficient u1 is dependent upon the angle of pitch of the roof measured from the horizontal.
This coefficient is considered to be constant across the whole roof.
Angle of roof pitch α° alpha=16°

Location:

Difference in eaves levels	ho1=2.5 m
Length of lower building(s)	b1=10 m
Width of higher building	b2=20 m

Location: Roof and snow loading

Snow loading on roof structures to BS EN 1991-1-3:2003

Ground snow load at 100m a.m.s.l Sb=0.5 kN/m²
Site altitude is less than 100 m above mean sea level.
Characteristic ground snow load Sk=0.5 kN/m²
For UK designs the following exposure and thermal coefficient values as per Clauses NA.2.15 and NA.2.16 in the NA to BS EN 1991-1-3:2003 will be adopted for all topographies and all roofing materials:
Exposure coefficient Ce=1.0
Thermal coefficient Ct=1.0

Flat or monopitch roof - BS EN 1991-1-3:2003, Table 5.2

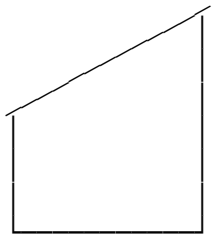

Roof section

Flat or monopitch roof where the pitch angle is α°

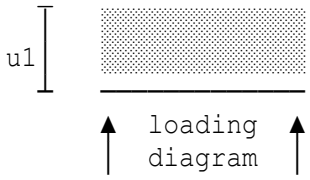

For this type of roof it is necessary to consider a single load case of a uniform layer of snow across the whole roof

The value of the snow load shape coefficient u1 is dependent upon the angle of pitch of the roof measured from the horizontal.
This coefficient is considered to be constant across the whole roof.
Angle of roof pitch α° alpha=16°

Copyright 1986-2024 Fitzroy Systems Ltd.

Location:

Difference in eaves levels	ho1=2.5 m
Length of lower building(s)	b1=10 m
Width of higher building	b2=20 m

Location: Roof and Snow loading

Snow loading on roof structures to BS EN 1991-1-3:2003

Ground snow load at 100m a.m.s.l Sb=0.5 kN/m²
Site altitude is less than 100 m above mean sea level.
Characteristic ground snow load Sk=0.5 kN/m²
For UK designs the following exposure and thermal coefficient values as per Clauses NA.2.15 and NA.2.16 in the NA to BS EN 1991-1-3:2003 will be adopted for all topographies and all roofing materials:
Exposure coefficient Ce=1.0
Thermal coefficient Ct=1.0

Flat or monopitch roof - BS EN 1991-1-3:2003, Table 5.2

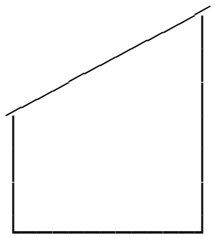

Roof section

Flat or monopitch roof where the pitch angle is α°

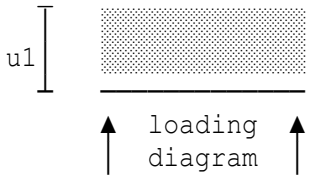

For this type of roof it is necessary to consider a single load case of a uniform layer of snow across the whole roof

The value of the snow load shape coefficient u1 is dependent upon the angle of pitch of the roof measured from the horizontal.
This coefficient is considered to be constant across the whole roof.
Angle of roof pitch α° alpha=16°

Location:

Parapet height	ho1=2.5 m
Length of building	b1=10 m
Low level roof slope	alpha6=12.5°

Location: Roof and snow loading

Snow loading on roof structures to BS EN 1991-1-3:2003

Ground snow load at 100m a.m.s.l Sb=0.5 kN/m²
Site altitude is less than 100 m above mean sea level.
Characteristic ground snow load Sk=0.5 kN/m²
For UK designs the following exposure and thermal coefficient values as per Clauses NA.2.15 and NA.2.16 in the NA to BS EN 1991-1-3:2003 will be adopted for all topographies and all roofing materials:
Exposure coefficient Ce=1.0
Thermal coefficient Ct=1.0

Flat or monopitch roof - BS EN 1991-1-3:2003, Table 5.2

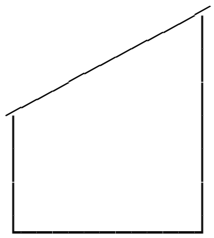

Roof section

Flat or monopitch roof where the pitch angle is α°

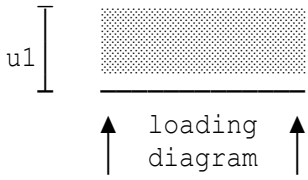

For this type of roof it is necessary to consider a single load case of a uniform layer of snow across the whole roof

The value of the snow load shape coefficient u1 is dependent upon the angle of pitch of the roof measured from the horizontal.
This coefficient is considered to be constant across the whole roof.
Angle of roof pitch α° alpha=16°

Copyright 1986-2024 Fitzroy Systems Ltd.

Location:

Parapet height	ho1=2.5 m
Length of building	b1=10 m

Location: Roof and snow loading

Snow loading on roof structures to BS EN 1991-1-3:2003

Ground snow load at 100m a.m.s.l Sb=0.5 kN/m²
Site altitude is less than 100 m above mean sea level.
Characteristic ground snow load Sk=0.5 kN/m²
For UK designs the following exposure and thermal coefficient values as per Clauses NA.2.15 and NA.2.16 in the NA to BS EN 1991-1-3:2003 will be adopted for all topographies and all roofing materials:
Exposure coefficient Ce=1.0
Thermal coefficient Ct=1.0

Symmetrical pitched Roof

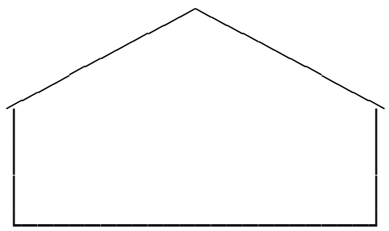

Roof section

Two load types will be considered. The pitch angle is > 15°

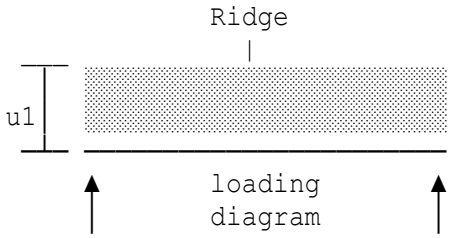

CASE 1: Uniform load over whole roof

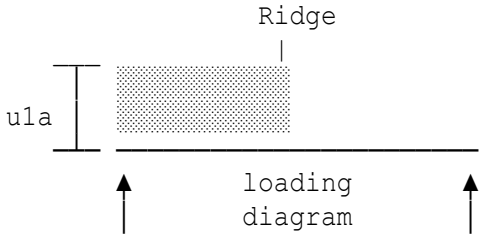

CASE 2: Uniform load over half the roof only

The value of the snow load shape coefficient u1 is dependent upon the angle of pitch of the roof measured from the horizontal. This coefficient u1 is considered to be constant across the whole roof in load case 1 and in load case 2 the coefficient u1a is considered to act over half the roof only.

Angle of roof pitch α°	alpha=16°
Location:	
Parapet height	ho1=2.5 m
Parapet to ridge length	b1=10 m
Building width	b2=20 m

Location: Roof and snow loading

Snow loading on roof structures to BS EN 1991-1-3:2003

Ground snow load at 100m a.m.s.l Sb=0.5 kN/m²
Site altitude is less than 100 m above mean sea level.
Characteristic ground snow load Sk=0.5 kN/m²
For UK designs the following exposure and thermal coefficient values as per Clauses NA.2.15 and NA.2.16 in the NA to BS EN 1991-1-3:2003 will be adopted for all topographies and all roofing materials:
Exposure coefficient Ce=1.0
Thermal coefficient Ct=1.0

Symmetrical pitched Roof

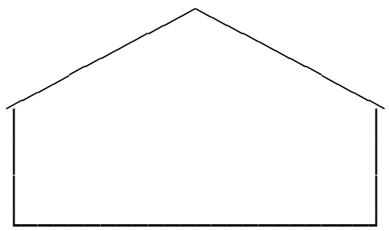

Roof section

Two load types will be considered. The pitch angle is > 15°

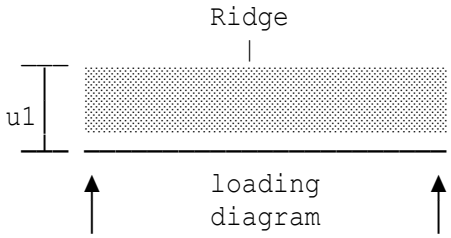

CASE 1: Uniform load over whole roof

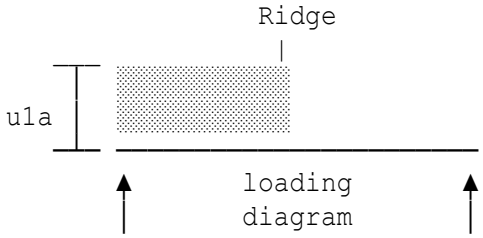

CASE 2: Uniform load over half the roof only

The value of the snow load shape coefficient u1 is dependent upon the angle of pitch of the roof measured from the horizontal. This coefficient u1 is considered to be constant across the whole roof in load case 1 and in load case 2 the coefficient u1a is considered to act over half the roof only.

Angle of roof pitch α°	alpha=16°
Location:	
Eaves to ridge height	ho1=2.5 m
	b1=20 m
	b2=10 m
Slope of roof to building B	alpha=16°
	h=TAN(RAD(alpha))*(ls12/ls1_2)
	=1.0753 m

Location: Roof and snow loading

Snow loading on roof structures to BS EN 1991-1-3:2003

Ground snow load at 100m a.m.s.l Sb=0.5 kN/m²
Site altitude is less than 100 m above mean sea level.
Characteristic ground snow load Sk=0.5 kN/m²
For UK designs the following exposure and thermal coefficient values as per Clauses NA.2.15 and NA.2.16 in the NA to BS EN 1991-1-3:2003 will be adopted for all topographies and all roofing materials:
Exposure coefficient Ce=1.0
Thermal coefficient Ct=1.0

Flat or monopitch roof - BS EN 1991-1-3:2003, Table 5.2

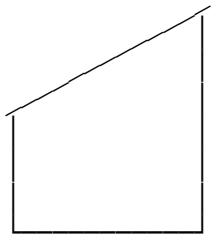

Roof section

Flat or monopitch roof where the pitch angle is α°

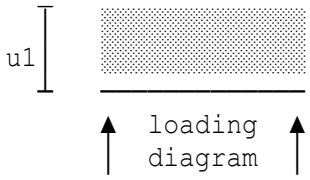

For this type of roof it is necessary to consider a single load case of a uniform layer of snow across the whole roof

The value of the snow load shape coefficient u1 is dependent upon the angle of pitch of the roof measured from the horizontal.
This coefficient is considered to be constant across the whole roof.
Angle of roof pitch α° alpha=16°

Location:

Left side obstruction height	ho1=2.5 m
Roof Length to left side	b1=10 m
Right side obstruction height	ho2=2 m
Roof Length to right side	b2=20 m

Location: Roof and snow loading

Snow loading on roof structures to BS EN 1991-1-3:2003

Ground snow load at 100m a.m.s.l Sb=0.5 kN/m²
Site altitude is less than 100 m above mean sea level.
Characteristic ground snow load Sk=0.5 kN/m²
For UK designs the following exposure and thermal coefficient values as per Clauses NA.2.15 and NA.2.16 in the NA to BS EN 1991-1-3:2003 will be adopted for all topographies and all roofing materials:
Exposure coefficient Ce=1.0
Thermal coefficient Ct=1.0

Symmetrical pitched Roof

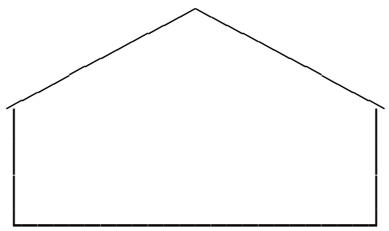

Roof section

Two load types will be considered. The pitch angle is > 15°

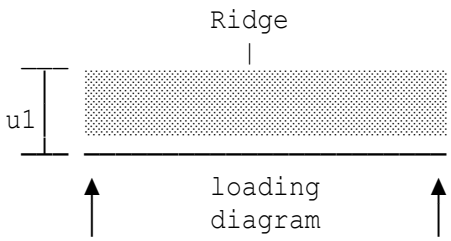

CASE 1: Uniform load over whole roof

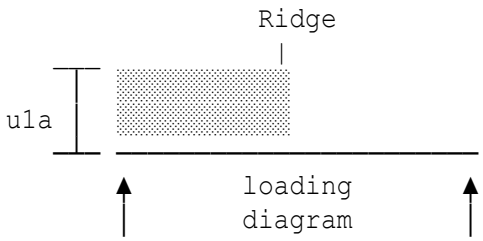

CASE 2: Uniform load over half the roof only

The value of the snow load shape coefficient u1 is dependent upon the angle of pitch of the roof measured from the horizontal. This coefficient u1 is considered to be constant across the whole roof in load case 1 and in load case 2 the coefficient u1a is considered to act over half the roof only.

Angle of roof pitch α°	alpha=16°
Location:	
Left side obstruction height	ho1=2.5 m
Roof Length to left side	b1=10 m
Right side obstruction height	ho2=2 m
Roof Length obstruct. to ridge	b2=5 m
Obstruction to right Wall	b3=20 m

Location: Roof and snow loading

Snow loading on roof structures to BS EN 1991-1-3:2003

Ground snow load at 100m a.m.s.l Sb=0.5 kN/m²
Site altitude is less than 100 m above mean sea level.
Characteristic ground snow load Sk=0.5 kN/m²
For UK designs the following exposure and thermal coefficient values as per Clauses NA.2.15 and NA.2.16 in the NA to BS EN 1991-1-3:2003 will be adopted for all topographies and all roofing materials:
Exposure coefficient Ce=1.0
Thermal coefficient Ct=1.0

Flat or monopitch roof - BS EN 1991-1-3:2003, Table 5.2

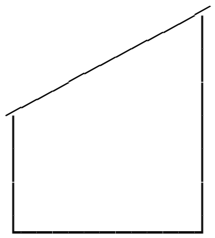

Roof section

Flat or monopitch roof where the pitch angle is α°

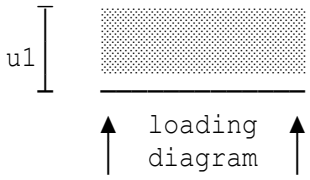

For this type of roof it is necessary to consider a single load case of a uniform layer of snow across the whole roof

The value of the snow load shape coefficient u1 is dependent upon the angle of pitch of the roof measured from the horizontal.
This coefficient is considered to be constant across the whole roof.
Angle of roof pitch α° alpha=16°

Location:

Canopy to roof height	ho1=2.5 m
Span of canopy	b1=2 m
Length of building	b2=10 m

Location: Wind loads

Displacement heights

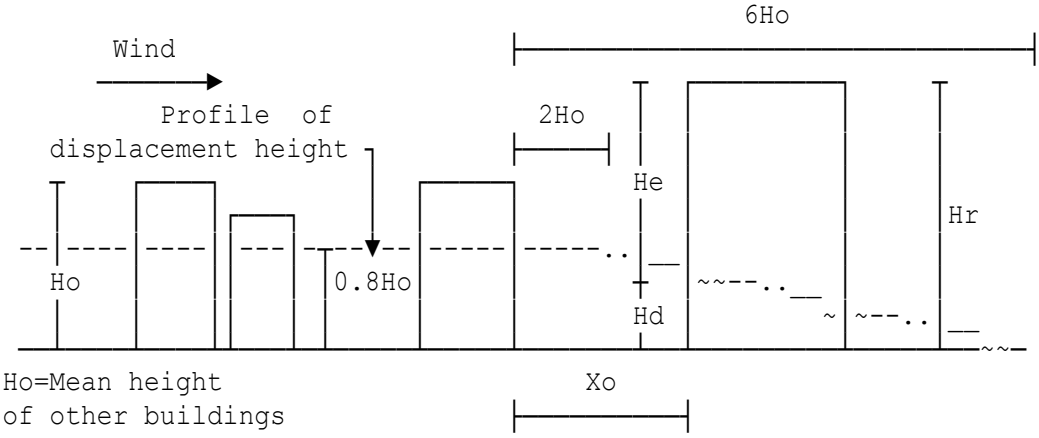

Ho=Mean height
of other buildings

Building reference height	Hr=13.77 m
upwind of site	Ho=6.5 m
Upwind spacing of building	Xo=20 m
Displacement height	Hdw0=3.8 m
Displacement height	Hdw90=3.8 m
Building type factor	Kb=2
Building height	H=13.77 m

Standard wind loads

Basic wind speed	Vb=21 m/s
Site altitude above mean sea level	deltaS=25 m
Direction factor	Sdw0=1
Direction factor	Sdw90=0.73

	Effective height (long face)	**Hew0**	**9.97 m**
	Effective height (short face)	**Hew90**	**9.97 m**
	Altitude factor (long face)	**Saw0**	**1.025**
DESIGN	**Altitude factor (short face)**	**Saw90**	**1.025**
SUMMARY	**Direction factor (long face)**	**Sdw0**	**1**
	Direction factor (short face)	**Sdw90**	**0.73**
	Seasonal factor	**Ss**	**1**
	Probability factor	**Sp**	**1**
	Dynamic wind pressure (long face)	**qsw0**	**0.8461 kN/m²**
	Dynamic wind pressure (short face)	**qsw90**	**0.4509 kN/m²**

Dynamic pressure & pressure coeffs on walls of rectangular buildings

Greater horiz.dimens of building L=60 m
Lesser horiz.dimens of building W=20 m
Height of wall including parapet Hr'=13.77 m
Wind acting on long face of building:
Dynamic pressure based on height above ground 9.97 m.
Dynamic pressure @ eaves qew0=0.8461 kN/m²
Wind acting on short face of building:
Dynamic pressure based on height above ground 9.97 m.
Dynamic pressure @ eaves qew90=0.4509 kN/m²

Case 1: Wind on long face of building (i.e. angle Theta = 0°)

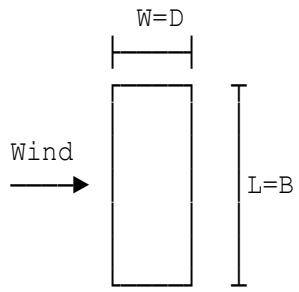

PLAN VIEW

Inwind depth D=20 m
Cross wind width B=60 m

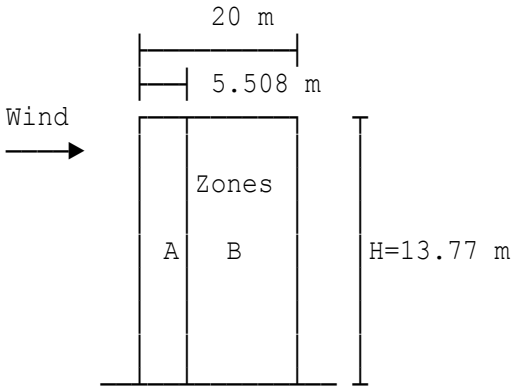

ELEVATION ON SIDE FACE

Key zones for wall pressure data.

Scaling width > D
27.54 m > 20 m

Case 2: Wind on short face of building (i.e. angle Theta = 90°)

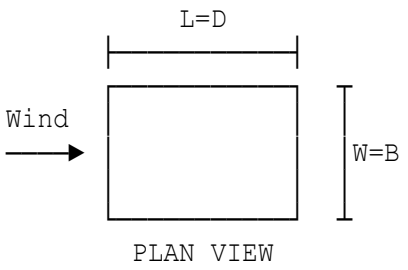

Inwind depth D=60 m
Cross wind width B=20 m

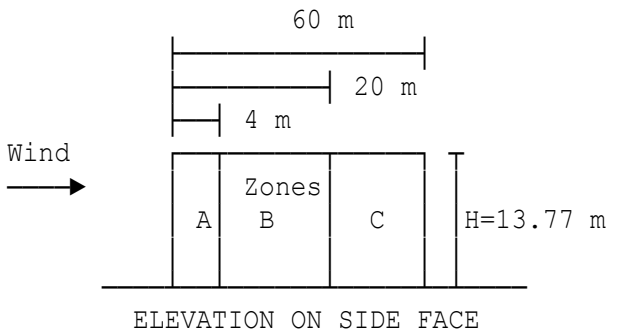

Key zones for wall pressure data.

Wall net pressure Cpi=0.2	**Wind on long face of building**
Windward (front) face	N1LW1=PeLW1-Pi1ww0=0.5181 kN/m²
Leeward (rear) face	N1LW2=PeLW2-Pi1ww0=-0.5923 kN/m²
Isolated Zone A side face	N1LW3=PeLW3-Pi1ww0=-1.269 kN/m²
Isolated Zone B side face	N1LW4=PeLW4-Pi1ww0=-0.8461 kN/m²

Wall net pressure Cpi=0.2	**Wind on short face of building**
Windward (front) face	N1SW1=PeSW1-Pi1ww90=0.1804 kN/m²
Leeward (rear) face	N1SW2=PeSW2-Pi1ww90=-0.3156 kN/m²
Isolated Zone A side face	N1SW3=PeSW3-Pi1ww90=-0.6764 kN/m²
Isolated Zone B side face	N1SW4=PeSW4-Pi1ww90=-0.4509 kN/m²
Isolated Zone C side face	N1SW5=PeSW5-Pi1ww90=-0.3156 kN/m²

Wall net pressure Cpi=-0.3	**Wind on long face of building**
Windward (front) face	N2LW1=PeLW1-Pi2ww0=0.9411 kN/m²
Leeward (rear) face	N2LW2=PeLW2-Pi2ww0=-0.1692 kN/m²
Isolated Zone A side face	N2LW3=PeLW3-Pi2ww0=-0.8461 kN/m²
Isolated Zone B side face	N2LW4=PeLW4-Pi2ww0=-0.4231 kN/m²

Wall net pressure Cpi=-0.3	**Wind on short face of building**
Windward (front) face	N2SW1=PeSW1-Pi2ww90=0.4058 kN/m²
Leeward (rear) face	N2SW2=PeSW2-Pi2ww90=-0.0902 kN/m²
Isolated Zone A side face	N2SW3=PeSW3-Pi2ww90=-0.4509 kN/m²
Isolated Zone B side face	N2SW4=PeSW4-Pi2ww90=-0.2255 kN/m²
Isolated Zone C side face	N2SW5=PeSW5-Pi2ww90=-0.0902 kN/m²

External pressure coefficients Cpe for duopitch roofs of

rectangular clad buildings to Table 10 of BS6399-2:1997 (June 02)

Case 1: Wind angle Theta = 0°

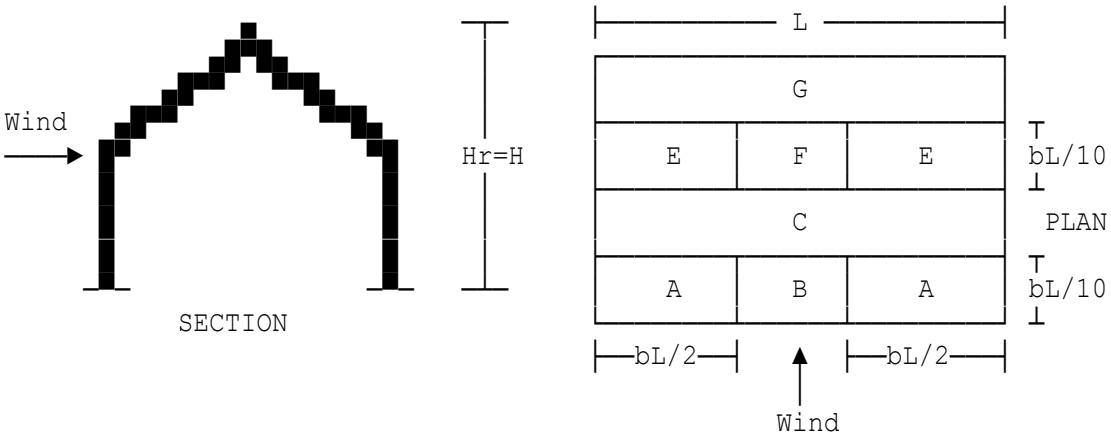

Roof slope to horizontal Dalpha=30°

Case 2: Wind angle Theta = 90°

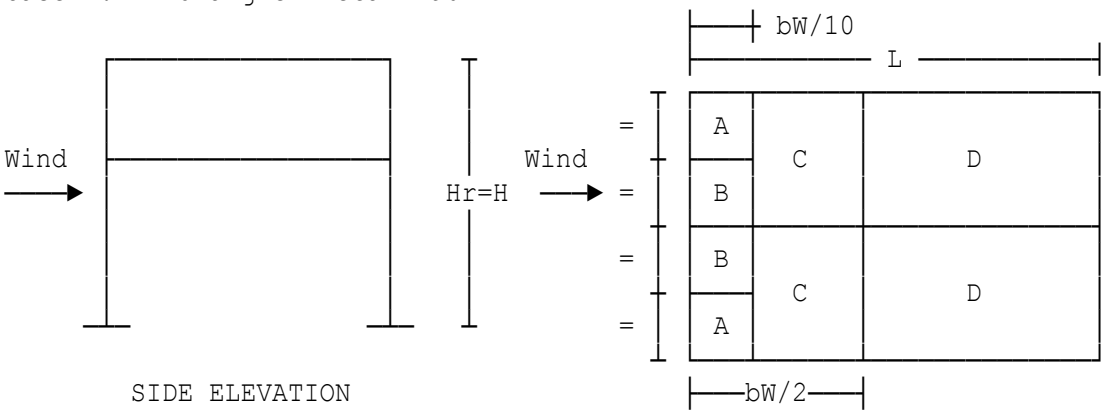

Roof net pressure Cpi=0.2 **Wind at 0° (long face)**

Roof zone A	N1RA0=PeRA0-PiW1w0=-0.5923 kN/m²
Roof zone B	N1RB0=PeRB0-PiW1w0=-0.5923 kN/m²
Roof zone C	N1RC0=PeRC0-PiW1w0=-0.3384 kN/m²
Roof zone E	N1RE0=PeRE0-PiW1w0=-0.9307 kN/m²
Roof zone F	N1RF0=PeRF0-PiW1w0=-0.5923 kN/m²
Roof zone G	N1RG0=PeRG0-PiW1w0=-0.5923 kN/m²
Roof zone A (+Ve Value)	N1RAA0=PRAA0-PiW1w0=0.5077 kN/m²
Roof zone B (+Ve Value)	N1RAB0=PRAB0-PiW1w0=0.2538 kN/m²
Roof zone C (+Ve Value)	N1RAC0=PRAC0-PiW1w0=0.1692 kN/m²
Roof zone E (+Ve Value)	N1RAE0=PRAE0-PiW1w0=-0.9307 kN/m²
Roof zone F (+Ve Value)	N1RAF0=PRAF0-PiW1w0=-0.5923 kN/m²
Roof zone G (+Ve Value)	N1RAG0=PRAG0-PiW1w0=-0.5923 kN/m²

Roof net pressure Cpi=0.2 **Wind at 90° (short face)**

Roof zone A	N1RA9=PeRA9-PiW1w90=-0.6313 kN/m²
Roof zone B	N1RB9=PeRB9-PiW1w90=-0.5862 kN/m²
Roof zone C	N1RC9=PeRC9-PiW1w90=-0.3607 kN/m²
Roof zone D	N1RD9=PeRD9-PiW1w90=-0.3156 kN/m²

Roof net pressure Cpi=-0.3 **Wind at 0° (long face)**

Roof zone A	N2RA0=PeRA0-PiW2w0=-0.1692 kN/m²
Roof zone B	N2RB0=PeRB0-PiW2w0=-0.1692 kN/m²
Roof zone C	N2RC0=PeRC0-PiW2w0=0.0846 kN/m²
Roof zone E	N2RE0=PeRE0-PiW2w0=-0.5077 kN/m²
Roof zone F	N2RF0=PeRF0-PiW2w0=-0.1692 kN/m²
Roof zone G	N2RG0=PeRG0-PiW2w0=-0.1692 kN/m²
Roof zone A (+Ve Value)	N2RAA0=PRAA0-PiW2w0=0.9307 kN/m²
Roof zone B (+Ve Value)	N2RAB0=PRAB0-PiW2w0=0.6769 kN/m²
Roof zone C (+Ve Value)	N2RAC0=PRAC0-PiW2w0=0.5923 kN/m²
Roof zone E (+Ve Value)	N2RAE0=PRAE0-PiW2w0=-0.5077 kN/m²
Roof zone F (+Ve Value)	N2RAF0=PRAF0-PiW2w0=-0.1692 kN/m²
Roof zone G (+Ve Value)	N2RAG0=PRAG0-PiW2w0=-0.1692 kN/m²

Roof net pressure Cpi=-0.3 **Wind at 90° (short face)**

Roof zone A	N2RA9=PeRA9-PiW2w90=-0.4058 kN/m²
Roof zone B	N2RB9=PeRB9-PiW2w90=-0.3607 kN/m²
Roof zone C	N2RC9=PeRC9-PiW2w90=-0.1353 kN/m²
Roof zone D	N2RD9=PeRD9-PiW2w90=-0.0902 kN/m²

Location: Default case 2 Flat roof; topography critical

Displacement heights

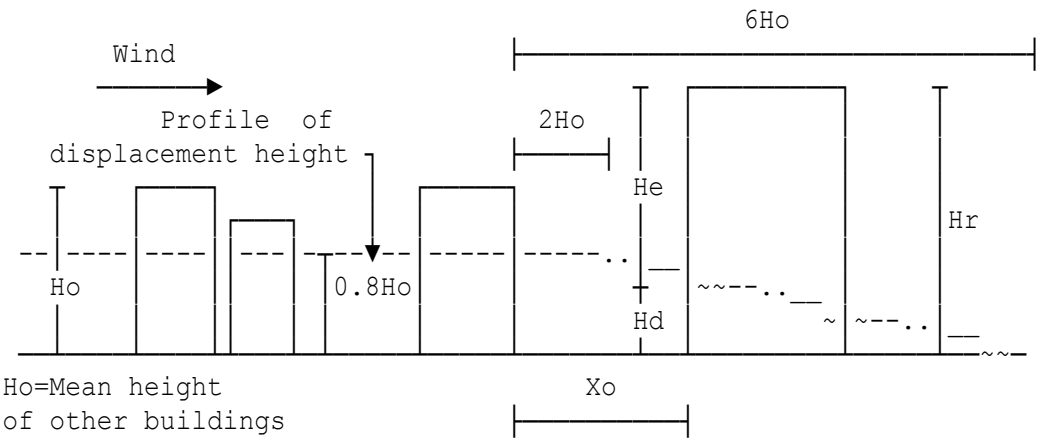

Building reference height	Hr=18 m
Displacement height	Hdw0=0 m
Displacement height	Hdw90=0 m
Building type factor	Kb=2
Building height	H=18 m

Standard wind loads

Basic wind speed	Vb=22.5 m/s

Site altitude above mean sea level deltaS=35 m

Topography is significant - Wind on long face of building

Slope details and site location relative to crest

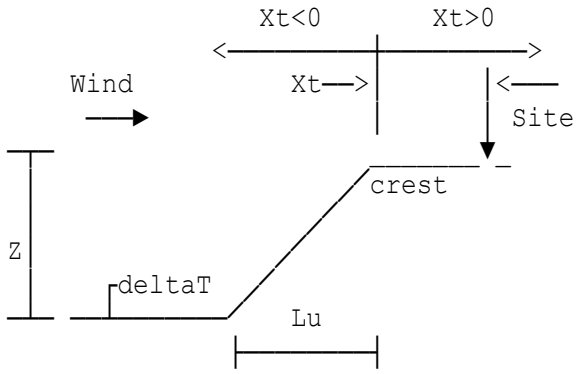

Site altitude is 35 m above mean sea level.

Xt is positive if site is located downwind of crest.

Xt is negative if site is located upwind of crest.

Height to crest Z=10 m

Direction factor Sdw0=0.85
Direction factor Sdw90=0.85
Seasonal factor Ss=0.86
Probability factor Sp=1.05

DESIGN SUMMARY

Effective height (long face)	**Hew0**	**18 m**
Effective height (short face)	**Hew90**	**18 m**
Altitude factor (long face)	**Saw0**	**1.113**
Altitude factor (short face)	**Saw90**	**1.035**
Direction factor (long face)	**Sdw0**	**0.85**
Direction factor (short face)	**Sdw90**	**0.85**
Seasonal factor	**Ss**	**0.86**
Probability factor	**Sp**	**1.05**
Dynamic wind pressure (long face)	**qsw0**	**0.7996 kN/m²**
Dynamic wind pressure (short face)	**qsw90**	**0.6915 kN/m²**

Dynamic pressure & pressure coeffs on walls of rectangular buildings

Greater horiz.dimens of building L=150 m
Lesser horiz.dimens of building W=40.5 m
Height of wall including parapet Hr'=18 m
Wind acting on long face of building:
Dynamic pressure based on height above ground 18 m.
Dynamic pressure @ eaves qew0=0.7996 kN/m²
Wind acting on short face of building:
Dynamic pressure based on height above ground 18 m.
Dynamic pressure @ eaves qew90=0.6915 kN/m²
Diagonal dimension of Ext long wall dima1=25 m
Diagonal dimension of Ext short wall dima2=35 m

Case 1: Wind on long face of building (i.e. angle Theta = 0°)

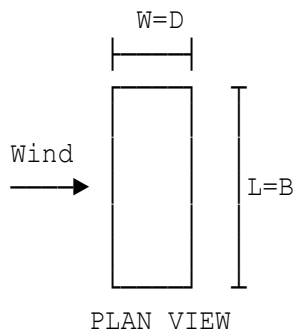

Inwind depth D=40.5 m
Cross wind width B=150 m

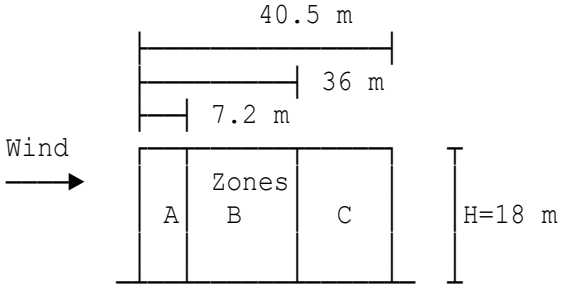

Key zones for wall pressure data.

ELEVATION ON SIDE FACE

Case 2: Wind on short face of building (i.e. angle Theta = 90°)

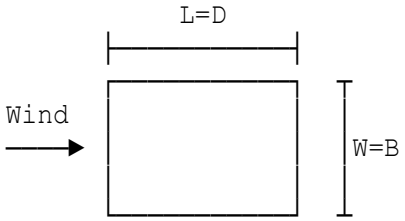

Inwind depth D=150 m
Cross wind width B=40.5 m

PLAN VIEW

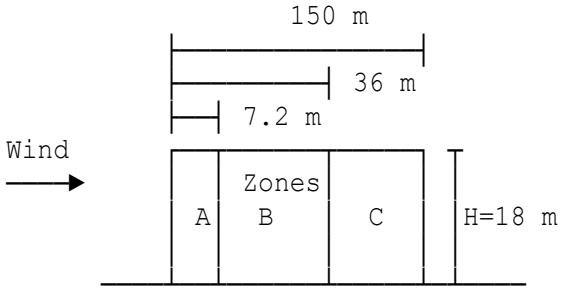

Key zones for wall pressure data.

ELEVATION ON SIDE FACE

Internal volume of storey SinVol=40000 m³

External pressure coefficients Cpe for flat roofs of rectangular clad buildings to Table 8 of BS6399-2:1997 (June 02)

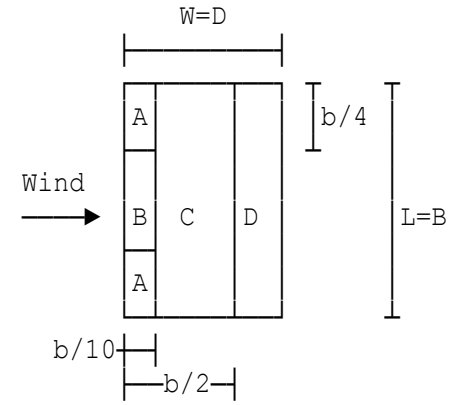

PLAN VIEW

Wind on long face (θ=0°)

Inwind depth D=W=40.5 m
Cross wind width B=L=150 m

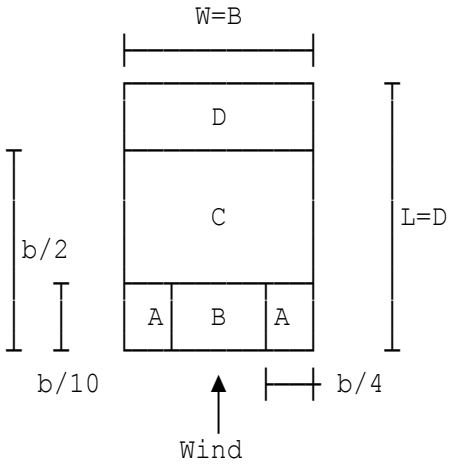

PLAN VIEW

Wind on short face (θ=90°)

Inwind depth D=L=150 m
Cross wind width B=W=40.5 m

Diagonal dimension of roof at 0 degree dima4=5 m
Diagonal dimension of roof at 90 degree dima5=5 m

Location: Default case 3 mono roof; topography critical

Displacement heights

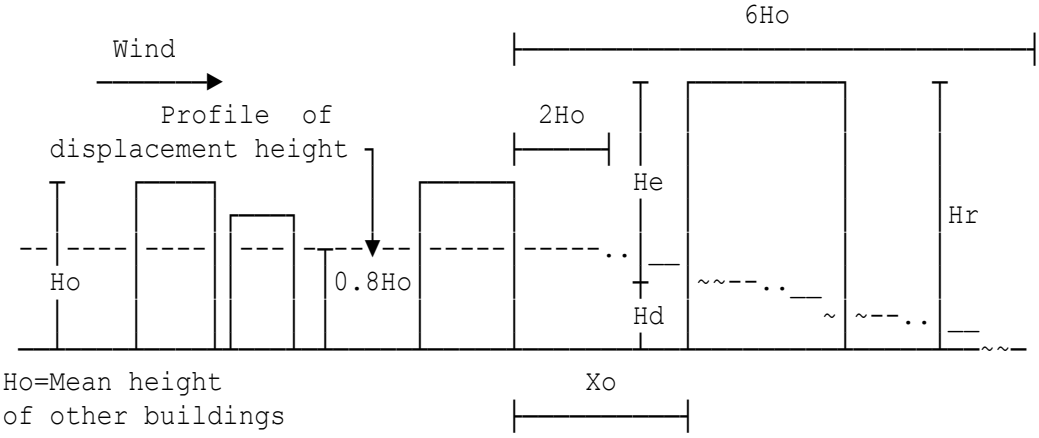

Building reference height	Hr=18.5 m
upwind of site	Ho=6.5 m
Upwind spacing of building	Xo=20 m
Displacement height	Hdw0=6.5 m
Displacement height	Hdw90=6.5 m
Building type factor	Kb=8
Building height	H=18.5 m

Standard wind loads

Basic wind speed	Vb=24 m/s
Site altitude above mean sea level	deltaS=30 m

Topography is significant - Wind on long face of building

Slope details and site location relative to crest

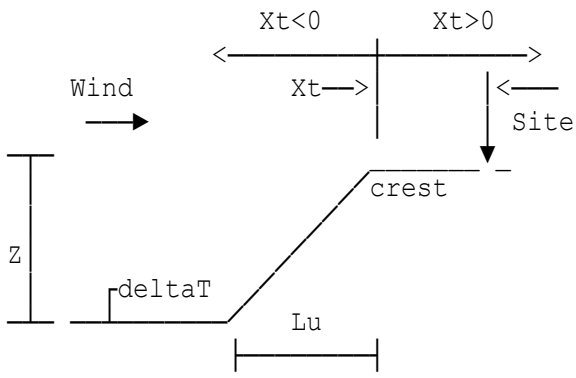

Site altitude is 30 m above mean sea level.

Xt is positive if site is located downwind of crest.

Xt is negative if site is located upwind of crest.

Height to crest	Z=5 m

Direction factor Sdw0=0.85
Direction factor Sdw90=0.85
Seasonal factor Ss=0.66
Probability factor Sp=1.05

	Effective height (long face)	**Hew0**	**12 m**
	Effective height (short face)	**Hew90**	**12 m**
	Altitude factor (long face)	**Saw0**	**1.09**
DESIGN	**Altitude factor (short face)**	**Saw90**	**1.03**
SUMMARY	**Direction factor (long face)**	**Sdw0**	**0.85**
	Direction factor (short face)	**Sdw90**	**0.85**
	Seasonal factor	**Ss**	**0.66**
	Probability factor	**Sp**	**1.05**
	Dynamic wind pressure (long face)	**qsw0**	**0.4172 kN/m²**
	Dynamic wind pressure (short face)	**qsw90**	**0.3725 kN/m²**

Dynamic pressure & pressure coeffs on walls of rectangular buildings

Greater horiz.dimens of building L=40 m
Lesser horiz.dimens of building W=20 m
Height of wall including parapet Hr'=18.5 m
Wind acting on long face of building:
Dynamic pressure at height Hr' qew0=0.613*Veew0^2/1000=0.4806 kN/m²
Wind acting on short face of building:
Dynamic pressure at height Hr' qew90=0.613*Veew90^2/1000=0.4291 kN/m²

Case 1: Wind on long face of building (i.e. angle Theta = 0°)

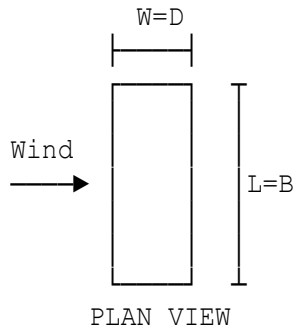

Inwind depth D=20 m
Cross wind width B=40 m

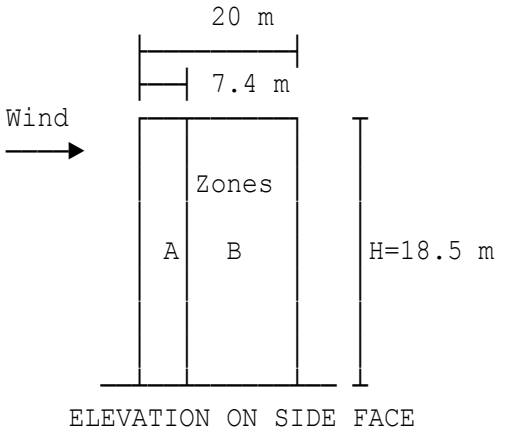

Key zones for wall pressure data.

Scaling width > D
37 m > 20 m

Case 2: Wind on short face of building (i.e. angle Theta = 90°)

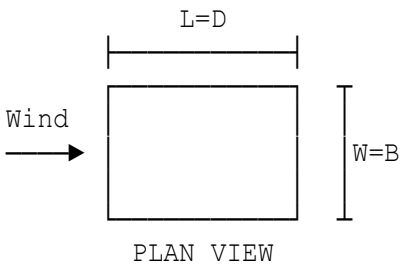

Inwind depth D=40 m
Cross wind width B=20 m

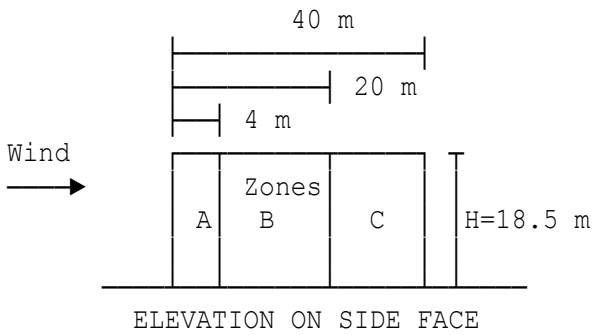

Key zones for wall pressure data.

"0.75 times Cpe"

Internal pressure coefficient 1 Cpi(1)=-0.8

Internal pressure coefficient 2 Cpi(2)=0.3

Wall net pressure Cpi=-0.8 Wind on long face of building

Windward (front) face N1LW1=PeLW1-Pi1ww0=0.7897 kN/m²
Leeward (rear) face N1LW2=PeLW2-Pi1ww0=0.1442 kN/m²
Isolated Zone A side face N1LW3=PeLW3-Pi1ww0=-0.2403 kN/m²
Isolated Zone B side face N1LW4=PeLW4-Pi1ww0=0 kN/m²

Wall net pressure Cpi=-0.8 Wind on short face of building

Windward (front) face N1SW1=PeSW1-Pi1ww90=0.6665 kN/m²
Leeward (rear) face N1SW2=PeSW2-Pi1ww90=0.1287 kN/m²
Isolated Zone A side face N1SW3=PeSW3-Pi1ww90=-0.2146 kN/m²
Isolated Zone B side face N1SW4=PeSW4-Pi1ww90=0 kN/m²
Isolated Zone C side face N1SW5=PeSW5-Pi1ww90=0.1287 kN/m²

Wall net pressure Cpi=0.3 Wind on long face of building

Windward (front) face N2LW1=PeLW1-Pi2ww0=0.261 kN/m²
Leeward (rear) face N2LW2=PeLW2-Pi2ww0=-0.3845 kN/m²
Isolated Zone A side face N2LW3=PeLW3-Pi2ww0=-0.7689 kN/m²
Isolated Zone B side face N2LW4=PeLW4-Pi2ww0=-0.5286 kN/m²

Wall net pressure Cpi=0.3 Wind on short face of building

Windward (front) face	N2SW1=PeSW1-Pi2ww90=0.1945 kN/m²
Leeward (rear) face	N2SW2=PeSW2-Pi2ww90=-0.3433 kN/m²
Isolated Zone A side face	N2SW3=PeSW3-Pi2ww90=-0.6866 kN/m²
Isolated Zone B side face	N2SW4=PeSW4-Pi2ww90=-0.472 kN/m²
Isolated Zone C side face	N2SW5=PeSW5-Pi2ww90=-0.3433 kN/m²

Coefficients Cpe for monopitch roofs of rectangular clad

read in conjunction with BS6399-2:1997 (June 2002)

Case 1: Wind angle Theta = 0°

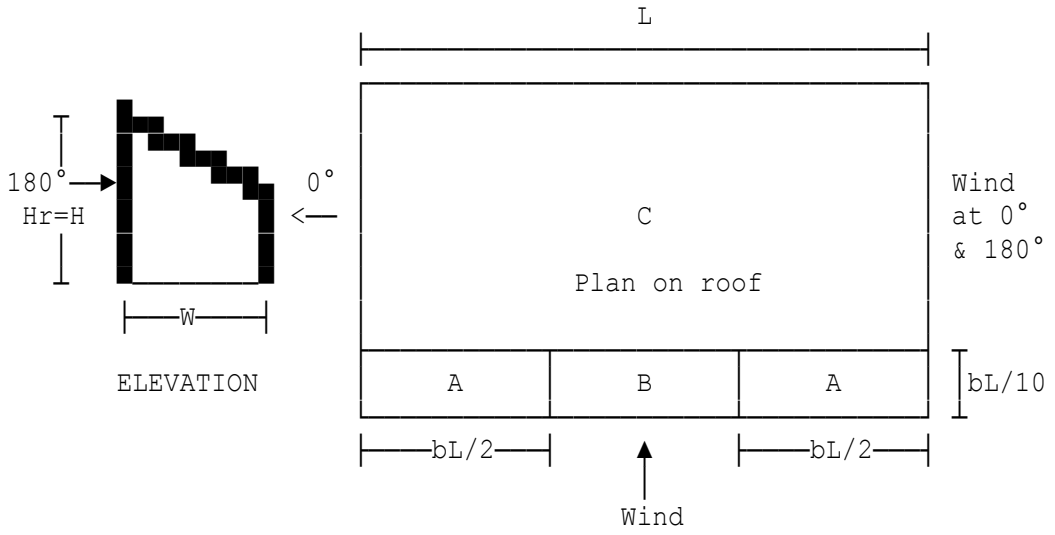

Pitch of roof (5° to 75°) Malpha=75°

Case 3: Wind angle Theta = 90°

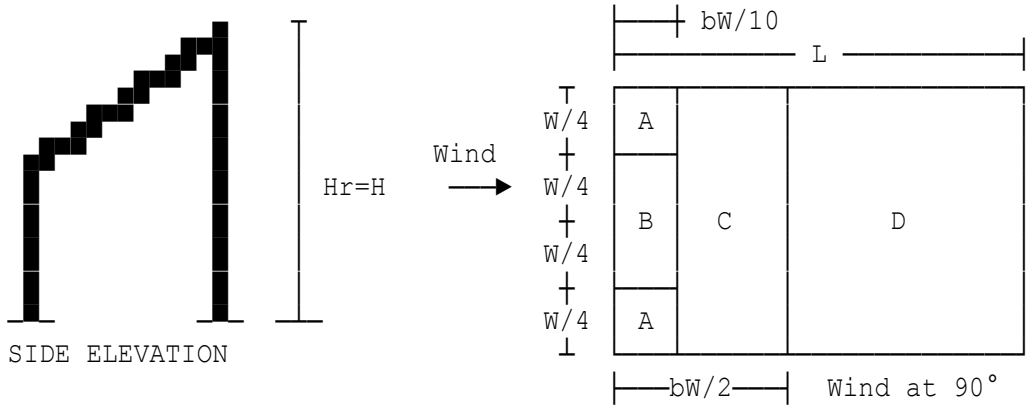

Roof net pressure Cpi=-0.8 **Wind at 0° (long face)**

Roof zone A	N1RA0=PeRA0-PiW1w0=0.3338 kN/m²
Roof zone B	N1RB0=PeRB0-PiW1w0=0.3338 kN/m²
Roof zone C	N1RC0=PeRC0-PiW1w0=0.3338 kN/m²
Roof zone A (+Ve Value)	N1RAA0=PRAA0-PiW1w0=0.6675 kN/m²
Roof zone B (+Ve Value)	N1RAB0=PRAB0-PiW1w0=0.6675 kN/m²
Roof zone C (+Ve Value)	N1RAC0=PRAC0-PiW1w0=0.6675 kN/m²

Roof net pressure Cpi=-0.8 **Wind at 90° (short face)**

Roof zone Au	N1Au9=PuRA9-PiW1w90=-0.149 kN/m²
Roof zone Al	N1Al9=PlRA9-PiW1w90=-0.149 kN/m²
Roof zone B	N1RB9=PeRB9-PiW1w90=-0.149 kN/m²
Roof zone C	N1RC9=PeRC9-PiW1w90=0.149 kN/m²
Roof zone D	N1RD9=PeRD9-PiW1w90=0.2235 kN/m²
Roof zone Au (+ve value)	N1Rup9=PpRu9-PiW1w90=0.5961 kN/m²
Roof zone Al (+ve value)	N1Rlp9=PpRl9-PiW1w90=0.5961 kN/m²
Roof zone B (+ve value)	N1RBp9=PpRB9-PiW1w90=0.5961 kN/m²
Roof zone C (+ve value)	N1RCp9=PpRC9-PiW1w90=0.5588 kN/m²
Roof zone D (+ve value)	N1RDp9=PpRD9-PiW1w90=0.5216 kN/m²

Roof net pressure Cpi=-0.8 **Wind at 180°**

Roof zone A	N1RA8=PeRA8-PiW1w0=-0.1252 kN/m²
Roof zone B	N1RB8=PeRB8-PiW1w0=0.0417 kN/m²
Roof zone C	N1RC8=PeRC8-PiW1w0=0.0417 kN/m²

Roof net pressure Cpi=0.3 **Wind at 0° (long face)**

Roof zone A	N2RA0=PeRA0-PiW2w0=-0.1252 kN/m²
Roof zone B	N2RB0=PeRB0-PiW2w0=-0.1252 kN/m²
Roof zone C	N2RC0=PeRC0-PiW2w0=-0.1252 kN/m²
Roof zone A (+Ve Value)	N2RAA0=PRAA0-PiW2w0=0.2086 kN/m²
Roof zone B (+Ve Value)	N2RAB0=PRAB0-PiW2w0=0.2086 kN/m²
Roof zone C (+Ve Value)	N2RAC0=PRAC0-PiW2w0=0.2086 kN/m²

Roof net pressure Cpi=0.3 **Wind at 90° (short face)**

Roof zone A upper	N2Au9=PuRA9-PiW2w90=-0.5588 kN/m²
Roof zone A lower	N2Al9=PlRA9-PiW2w90=-0.5588 kN/m²
Roof zone B	N2RB9=PeRB9-PiW2w90=-0.5588 kN/m²
Roof zone C	N2RC9=PeRC9-PiW2w90=-0.2608 kN/m²
Roof zone D	N2RD9=PeRD9-PiW2w90=-0.1863 kN/m²
Roof zone Au (+ve value)	N2Rup9=PpRu9-PiW2w90=0.1863 kN/m²
Roof zone Al (+ve value)	N2Rlp9=PpRl9-PiW2w90=0.1863 kN/m²
Roof zone B (+ve value)	N2RBp9=PpRB9-PiW2w90=0.1863 kN/m²
Roof zone C (+ve value)	N2RCp9=PpRC9-PiW2w90=0.149 kN/m²
Roof zone D (+ve value)	N2RDp9=PpRD9-PiW2w90=0.1118 kN/m²

Roof net pressure Cpi=0.3 **Wind at 180°**

Roof zone A	N2RA8=PeRA8-PiW2w0=-0.5841 kN/m²
Roof zone B	N2RB8=PeRB8-PiW2w0=-0.4172 kN/m²
Roof zone C	N2RC8=PeRC8-PiW2w0=-0.4172 kN/m²

Location: Default case 4 Hipped roof structure

Displacement heights

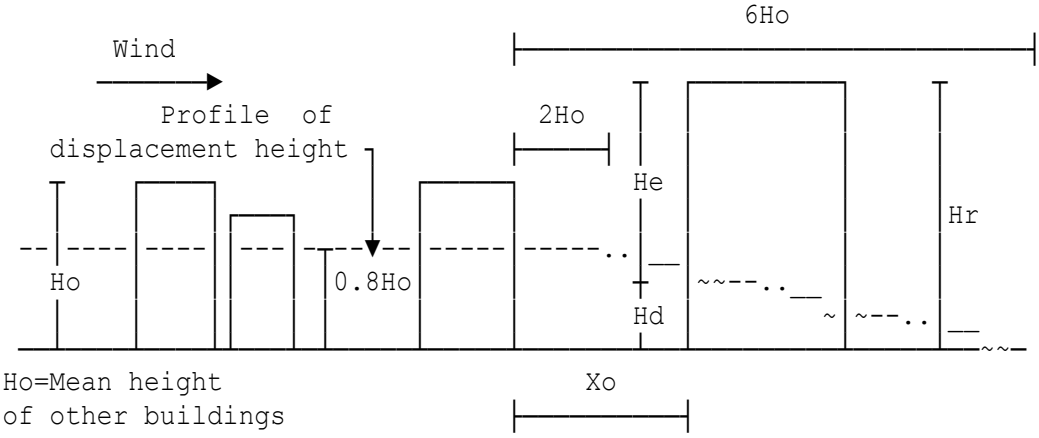

Building reference height	Hr=13.8 m
upwind of site	Ho=6.5 m
Upwind spacing of building	Xo=10 m
Displacement height	Hdw0=6.5 m
Displacement height	Hdw90=6.5 m
Building type factor	Kb=1
Building height	H=13.8 m

Standard wind loads

Basic wind speed	Vb=20 m/s
Site altitude above mean sea level	deltaS=25 m
Direction factor	Sdw0=1
Direction factor	Sdw90=1

	Effective height (long face)	**Hew0**	**7.3 m**
	Effective height (short face)	**Hew90**	**7.3 m**
	Altitude factor (long face)	**Saw0**	**1.025**
DESIGN	**Altitude factor (short face)**	**Saw90**	**1.025**
SUMMARY	**Direction factor (long face)**	**Sdw0**	**1**
	Direction factor (short face)	**Sdw90**	**1**
	Seasonal factor	**Ss**	**1**
	Probability factor	**Sp**	**1**
	Dynamic wind pressure (long face)	**qsw0**	**0.662 kN/m²**
	Dynamic wind pressure (short face)	**qsw90**	**0.662 kN/m²**

Dynamic pressure & pressure coeffs on walls of rectangular buildings

Greater horiz.dimens of building L=60 m
Lesser horiz.dimens of building W=30 m
Height of wall including parapet Hr'=13.8 m
Wind acting on long face of building:
Dynamic pressure based on height above ground 7.3 m.
Dynamic pressure @ eaves qew0=0.662 kN/m²
Wind acting on short face of building:
Dynamic pressure based on height above ground 7.3 m.
Dynamic pressure @ eaves qew90=0.662 kN/m²

Case 1: Wind on long face of building (i.e. angle Theta = 0°)

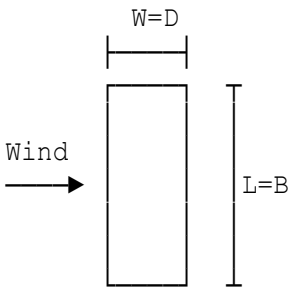

PLAN VIEW

Inwind depth D=30 m
Cross wind width B=60 m

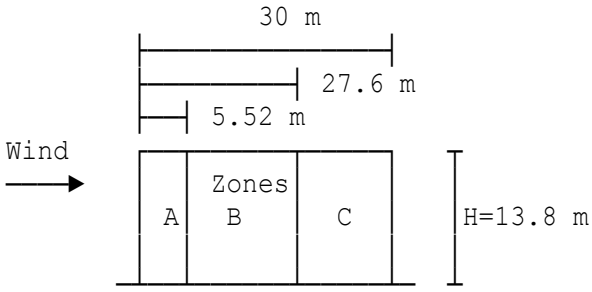

ELEVATION ON SIDE FACE

Key zones for wall pressure data.

Case 2: Wind on short face of building (i.e. angle Theta = 90°)

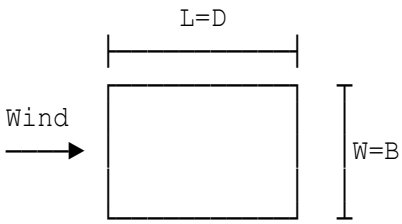

PLAN VIEW

Inwind depth D=60 m
Cross wind width B=30 m

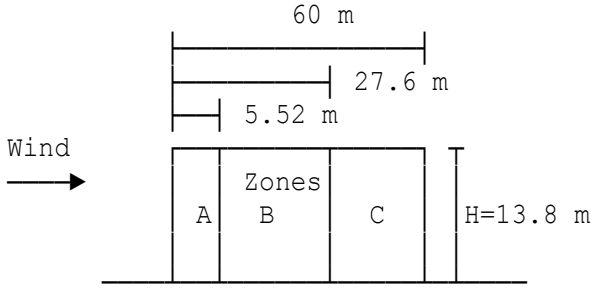

Key zones for wall pressure data.

ELEVATION ON SIDE FACE

"0.75 times Cpe"

Internal pressure coefficient 1 Cpi(1)=-0.8

Wall net pressure Cpi=-0.8	**Wind on long face of building**
Windward (front) face	N1LW1=PeLW1-Pi1ww0=1.028 kN/m²
Leeward (rear) face	N1LW2=PeLW2-Pi1ww0=0.1986 kN/m²
Isolated Zone A side face	N1LW3=PeLW3-Pi1ww0=-0.331 kN/m²
Isolated Zone B side face	N1LW4=PeLW4-Pi1ww0=0 kN/m²
Isolated Zone C side face	N1LW5=PeLW5-Pi1ww0=0.1986 kN/m²
Funnelling Zone A side face	N1LW6=PeLW6-Pi1ww0=-0.5296 kN/m²
Funnelling Zone B side face	N1LW7=PeLW7-Pi1ww0=-0.0662 kN/m²
Funnelling Zone C side face	N1LW8=PeLW8-Pi1ww0=-0.0662 kN/m²

Wall net pressure Cpi=-0.8	**Wind on short face of building**
Windward (front) face	N1SW1=PeSW1-Pi1ww90=0.9268 kN/m²
Leeward (rear) face	N1SW2=PeSW2-Pi1ww90=0.1986 kN/m²
Isolated Zone A side face	N1SW3=PeSW3-Pi1ww90=-0.331 kN/m²
Isolated Zone B side face	N1SW4=PeSW4-Pi1ww90=0 kN/m²
Isolated Zone C side face	N1SW5=PeSW5-Pi1ww90=0.1986 kN/m²
Funnelling Zone A side face	N1SW6=PeSW6-Pi1ww90=-0.5296 kN/m²
Funnelling Zone B side face	N1SW7=PeSW7-Pi1ww90=-0.0662 kN/m²
Funnelling Zone C side face	N1SW8=PeSW8-Pi1ww90=-0.0662 kN/m²

External pressure coefficients Cpe for hipped roofs of rectangular clad buildings to Table 11 of BS6399-2:1997 (June 2002)

Case 1: Wind angle Theta = 0°

Figure 21b

Zones for wind direction theta=0 deg & using alpha(0) as the angle of slope of the main roof

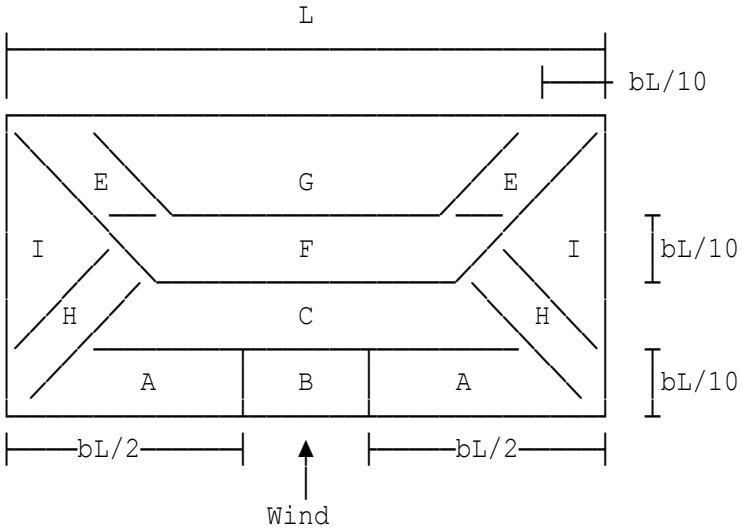

Main roof slope to horizontal alpha=22.5°

Case 2: Wind angle Theta=90°

Figure 21c

Zones for wind direction theta=90° using Wind alpha(90) as the angle of slope of the hipped end

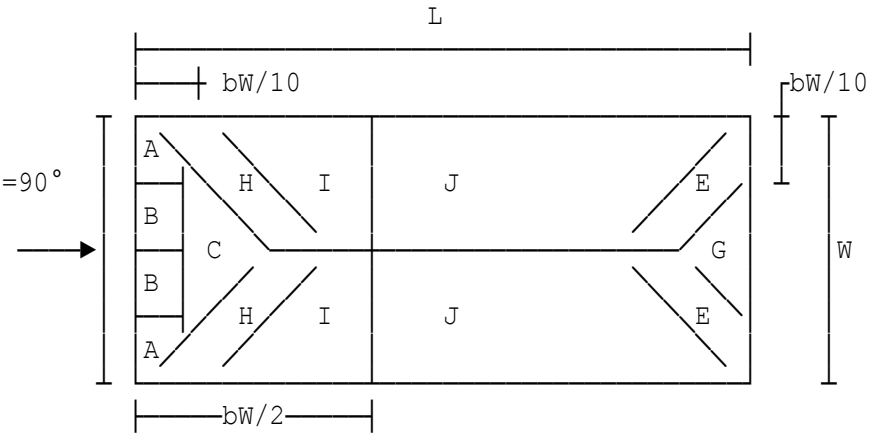

Hipped end roof slope to horizontal Halpha=30°

Roof net pressure Cpi=-0.8	**Wind at 0° (long face)**
Roof zone A	N1HA0=PeHA0-PiW1w0=-0.0662 kN/m²
Roof zone B	N1HB0=PeHB0-PiW1w0=0.0993 kN/m²
Roof zone C	N1HC0=PeHC0-PiW1w0=0.2979 kN/m²
Roof zone E	N1HE0=PeHE0-PiW1w0=-0.3641 kN/m²
Roof zone F	N1HF0=PeHF0-PiW1w0=-0.1655 kN/m²
Roof zone G	N1HG0=PeHG0-PiW1w0=0.1324 kN/m²
Roof zone H	N1HH0=PeHH0-PiW1w0=-0.0993 kN/m²
Roof zone I	N1HI0=PeHI0-PiW1w0=0.1324 kN/m²
Roof zone A (+Ve Value)	N1HAA0=PHAA0-PiW1w0=0.8606 kN/m²
Roof zone B (+Ve Value)	N1HAB0=PHAB0-PiW1w0=0.7613 kN/m²

Roof zone C (+Ve Value)	N1HAC0=PHAC0-PiW1w0=0.7282 kN/m²
Roof zone E (+Ve Value)	N1HAE0=PHAE0-PiW1w0=-0.3641 kN/m²
Roof zone F (+Ve Value)	N1HAF0=PHAF0-PiW1w0=-0.1655 kN/m²
Roof zone G (+Ve Value)	N1HAG0=PHAG0-PiW1w0=0.1324 kN/m²
Roof zone H (+Ve Value)	N1HAH0=PHAH0-PiW1w0=0.5296 kN/m²
Roof zone I (+Ve Value)	N1HAI0=PHAI0-PiW1w0=0.5296 kN/m²

Roof net pressure Cpi=-0.8	**Wind at 90° (short face)**
Roof zone A	N1HA9=PeHA9-PiW1w90=0.1986 kN/m²
Roof zone B	N1HB9=PeHB9-PiW1w90=0.1986 kN/m²
Roof zone C	N1HC9=PeHC9-PiW1w90=0.3972 kN/m²
Roof zone E	N1HE9=PeHE9-PiW1w90=-0.331 kN/m²
Roof zone G	N1HG9=PeHG9-PiW1w90=0.1324 kN/m²
Roof zone H	N1HH9=PeHH9-PiW1w90=-0.1324 kN/m²
Roof zone I	N1HI9=PeHI9-PiW1w90=0.1324 kN/m²
Roof zone J	N1HJ9=PeHJ9-PiW1w90=0.1986 kN/m²
Roof zone A (+Ve Value)	N1HAA9=PHAA9-PiW1w90=1.059 kN/m²
Roof zone B (+Ve Value)	N1HAB9=PHAB9-PiW1w90=0.8606 kN/m²
Roof zone C (+Ve Value)	N1HAC9=PHAC9-PiW1w90=0.7944 kN/m²
Roof zone E (+Ve Value)	N1HAE9=PHAE9-PiW1w90=-0.331 kN/m²
Roof zone G (+Ve Value)	N1HAG9=PHAG9-PiW1w90=0.1324 kN/m²
Roof zone H (+Ve Value)	N1HAH9=PHAH9-PiW1w90=0.5296 kN/m²
Roof zone I (+Ve Value)	N1HAI9=PHAI9-PiW1w90=0.5296 kN/m²
Roof zone J (+Ve Value)	N1HAJ9=PHAJ9-PiW1w90=0.5296 kN/m²

Location: Default case 5

Displacement heights

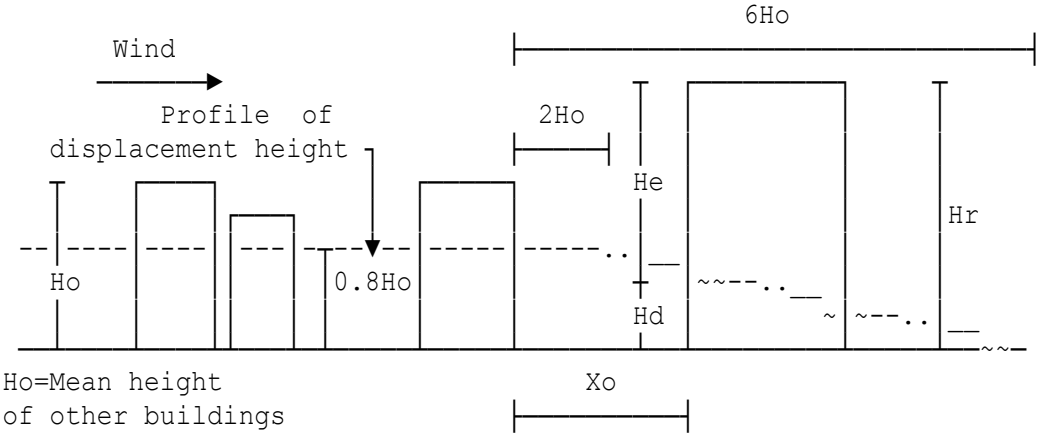

Building reference height	Hr=13.8 m
upwind of site	Ho=6.5 m
Upwind spacing of building	Xo=10 m
Displacement height	Hdw0=5.2 m
Displacement height	Hdw90=5.2 m
Building type factor	Kb=1
Building height	H=13.8 m

Standard wind loads

Basic wind speed	Vb=20 m/s
Site altitude above mean sea level	deltaS=25 m
Direction factor	Sdw0=1
Direction factor	Sdw90=1

	Effective height (long face)	**Hew0**	**8.6 m**
	Effective height (short face)	**Hew90**	**8.6 m**
	Altitude factor (long face)	**Saw0**	**1.025**
DESIGN	**Altitude factor (short face)**	**Saw90**	**1.025**
SUMMARY	**Direction factor (long face)**	**Sdw0**	**1**
	Direction factor (short face)	**Sdw90**	**1**
	Seasonal factor	**Ss**	**1**
	Probability factor	**Sp**	**1**
	Dynamic wind pressure (long face)	**qsw0**	**0.7124 kN/m²**
	Dynamic wind pressure (short face)	**qsw90**	**0.7124 kN/m²**

Dynamic pressure & pressure coeffs on walls of rectangular buildings

Greater horiz.dimens of building L=60 m
Lesser horiz.dimens of building W=30 m
Height of wall including parapet Hr'=13.8 m
Wind acting on long face of building:
Dynamic pressure based on height above ground 8.6 m.
Dynamic pressure @ eaves qew0=0.7124 kN/m²
Wind acting on short face of building:
Dynamic pressure based on height above ground 8.6 m.
Dynamic pressure @ eaves qew90=0.7124 kN/m²
Diagonal dimension of Ext long wall dima1=5 m
Diagonal dimension of Ext short wall dima2=5 m

Case 1: Wind on long face of building (i.e. angle Theta = 0°)

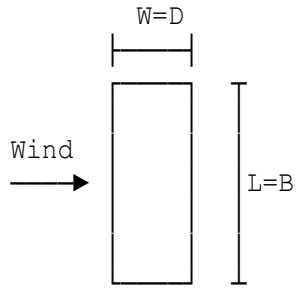

PLAN VIEW

Inwind depth D=30 m
Cross wind width B=60 m

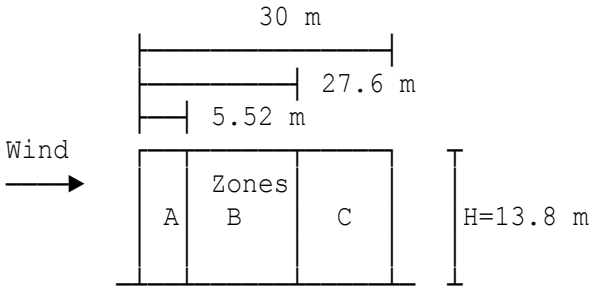

ELEVATION ON SIDE FACE

Key zones for wall pressure data.

Case 2: Wind on short face of building (i.e. angle Theta = 90°)

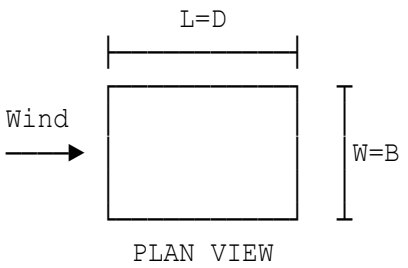

Inwind depth D=60 m
Cross wind width B=30 m

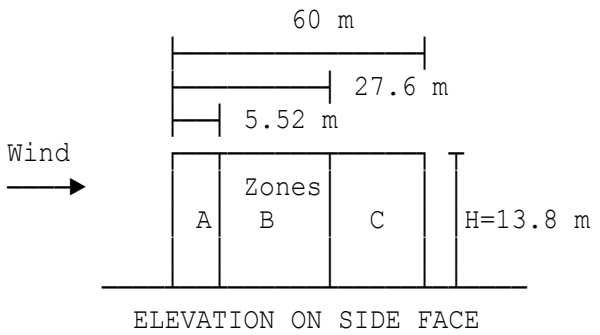

Key zones for wall pressure data.

Internal pressure coefficient 1 Cpi(1)=-0.8
Diagonal dimension (internal) dima3=79.35 m

External pressure coefficients Cpe for hipped roofs of rectangular clad buildings to Table 11 of BS6399-2:1997 (June 2002)

Case 1: Wind angle Theta = 0°

Figure 21b

Zones for wind direction theta=0 deg & using alpha(0) as the angle of slope of the main roof

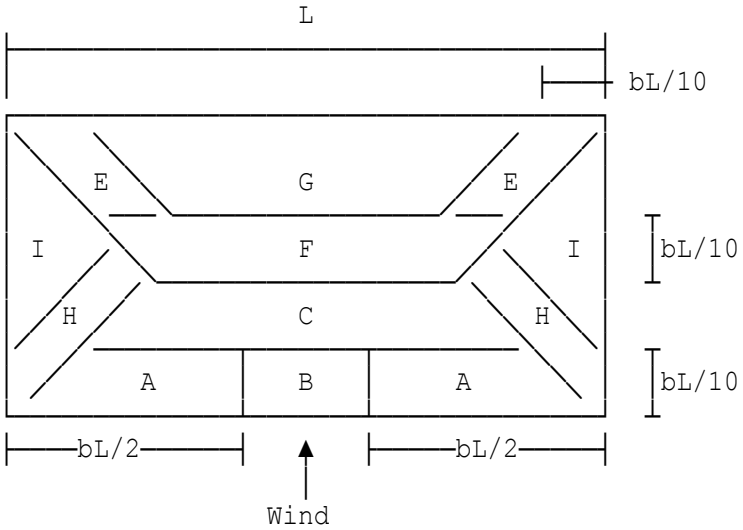

Main roof slope to horizontal alpha=22.5°

Case 2: Wind angle Theta=90°

Figure 21c

Zones for wind direction theta=90° using Wind alpha(90) as the angle of slope of the hipped end

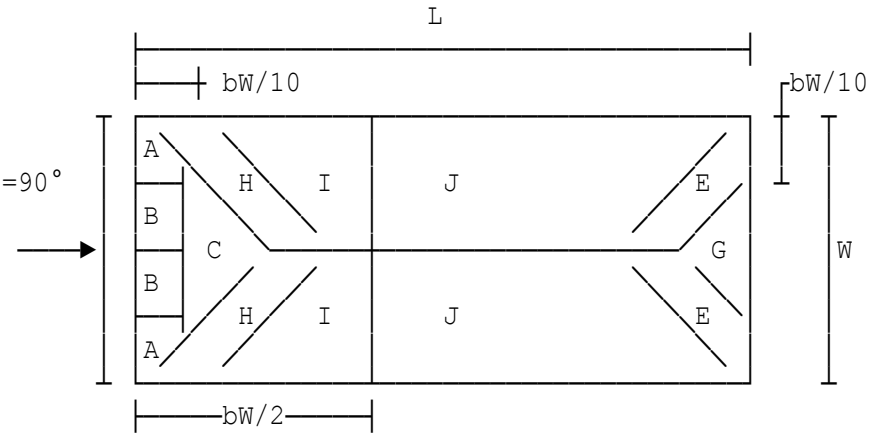

Hipped end roof slope to horizontal Halpha=30°
Diagonal dimension of roof at 0 degree dima4=5 m
Diagonal dimension of roof at 90 degree dima5=5 m

Location: Default case 6

Displacement heights

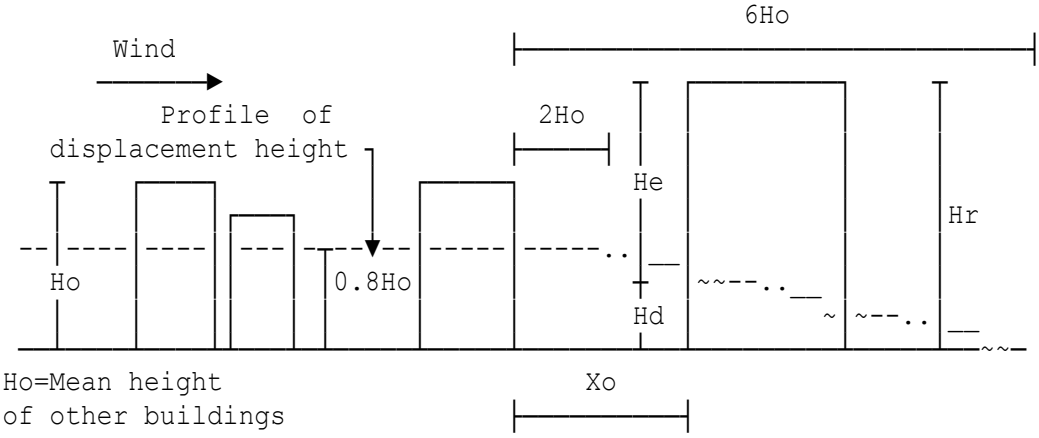

Ho=Mean height
of other buildings

Building reference height	Hr=10 m
upwind of site	Ho=4 m
Upwind spacing of building	Xo=10 m
Displacement height	Hdw0=2.8 m
Displacement height	Hdw90=2.8 m
Building type factor	Kb=1
Building height	H=10 m

Standard wind loads

Basic wind speed	Vb=21 m/s
Site altitude above mean sea level	deltaS=25 m

Topography is significant - Wind on long face of building

Slope details and site location relative to crest

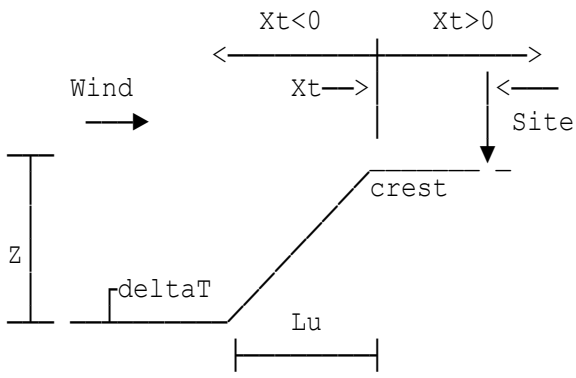

Site altitude is 25 m above mean sea level.

Xt is positive if site is located downwind of crest.

Xt is negative if site is located upwind of crest.

Height to crest	Z=5 m
Altitude of upwind base of topography	deltaT=20 m

Direction factor Sdw0=1
Direction factor Sdw90=1

	Effective height (long face)	**Hew0**	**7.2 m**
	Effective height (short face)	**Hew90**	**7.2 m**
	Altitude factor (long face)	**Saw0**	**1.061**
DESIGN	**Altitude factor (short face)**	**Saw90**	**1.025**
SUMMARY	**Direction factor (long face)**	**Sdw0**	**1**
	Direction factor (short face)	**Sdw90**	**1**
	Seasonal factor	**Ss**	**1**
	Probability factor	**Sp**	**1**
	Dynamic wind pressure (long face)	**qsw0**	**0.7636 kN/m²**
	Dynamic wind pressure (short face)	**qsw90**	**0.7126 kN/m²**

Dynamic pressure & pressure coeffs on walls of rectangular buildings

Greater horiz.dimens of building L=50 m
Lesser horiz.dimens of building W=30 m
Height of wall including parapet Hr'=10 m
Wind acting on long face of building:
Dynamic pressure at height Hr' qew0=0.613*Veew0^2/1000=0.8951 kN/m²
Wind acting on short face of building:
Dynamic pressure at height Hr' qew90=0.613*Veew90^2/1000=0.8354 kN/m²

Case 1: Wind on long face of building (i.e. angle Theta = 0°)

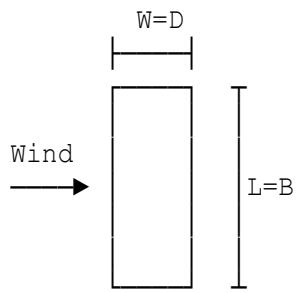

PLAN VIEW

Inwind depth D=30 m
Cross wind width B=50 m

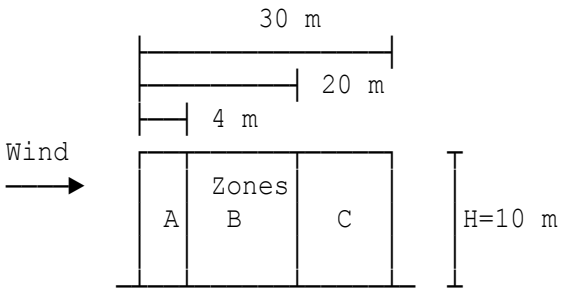

ELEVATION ON SIDE FACE

Key zones for wall pressure data.

Case 2: Wind on short face of building (i.e. angle Theta = 90°)

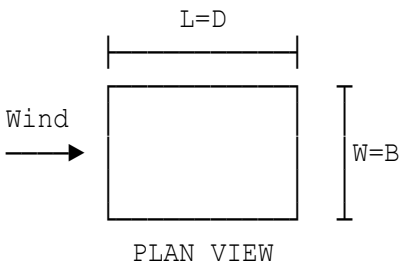

Inwind depth D=50 m
Cross wind width B=30 m

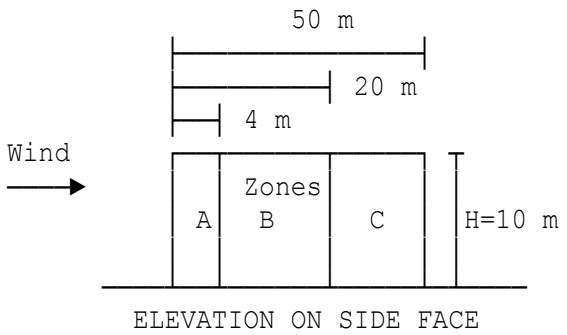

Key zones for wall pressure data.

Wall net pressure Cpi=0.2	**Wind on long face of building**
Windward (front) face	N1LW1=PeLW1-Pi1ww0=0.4326 kN/m²
Leeward (rear) face	N1LW2=PeLW2-Pi1ww0=-0.6266 kN/m²
Isolated Zone A side face	N1LW3=PeLW3-Pi1ww0=-1.343 kN/m²
Isolated Zone B side face	N1LW4=PeLW4-Pi1ww0=-0.8951 kN/m²
Isolated Zone C side face	N1LW5=PeLW5-Pi1ww0=-0.6266 kN/m²

Wall net pressure Cpi=0.2	**Wind on short face of building**
Windward (front) face	N1SW1=PeSW1-Pi1ww90=0.3341 kN/m²
Leeward (rear) face	N1SW2=PeSW2-Pi1ww90=-0.5848 kN/m²
Isolated Zone A side face	N1SW3=PeSW3-Pi1ww90=-1.253 kN/m²
Isolated Zone B side face	N1SW4=PeSW4-Pi1ww90=-0.8354 kN/m²
Isolated Zone C side face	N1SW5=PeSW5-Pi1ww90=-0.5848 kN/m²

Wall net pressure Cpi=-0.3	**Wind on long face of building**
Windward (front) face	N2LW1=PeLW1-Pi2ww0=0.8801 kN/m²
Leeward (rear) face	N2LW2=PeLW2-Pi2ww0=-0.179 kN/m²
Isolated Zone A side face	N2LW3=PeLW3-Pi2ww0=-0.8951 kN/m²
Isolated Zone B side face	N2LW4=PeLW4-Pi2ww0=-0.4475 kN/m²
Isolated Zone C side face	N2LW5=PeLW5-Pi2ww0=-0.179 kN/m²

Wall net pressure Cpi=-0.3	**Wind on short face of building**
Windward (front) face	N2SW1=PeSW1-Pi2ww90=0.7518 kN/m²
Leeward (rear) face	N2SW2=PeSW2-Pi2ww90=-0.1671 kN/m²

Isolated Zone A side face	N2SW3=PeSW3-Pi2ww90=-0.8354 kN/m²
Isolated Zone B side face	N2SW4=PeSW4-Pi2ww90=-0.4177 kN/m²
Isolated Zone C side face	N2SW5=PeSW5-Pi2ww90=-0.1671 kN/m²

External pressure coefficients Cpe for flat roofs of rectangular clad buildings to Table 8 of BS6399-2:1997 (June 02)

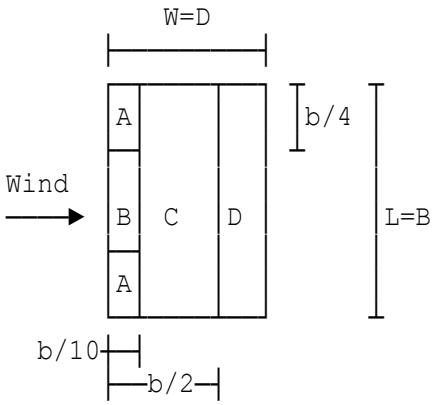

PLAN VIEW

Wind on long face (θ=0°)

Inwind depth D=W=30 m
Cross wind width B=L=50 m

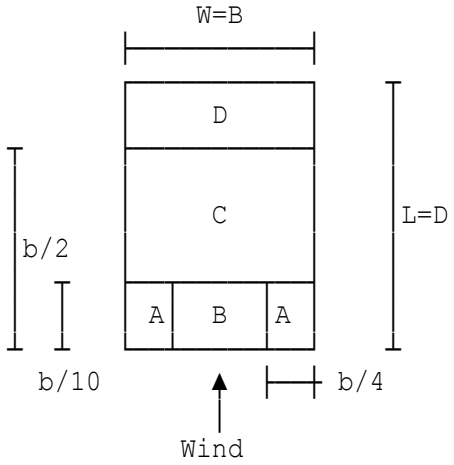

PLAN VIEW

Wind on short face (θ=90°)

Inwind depth D=L=50 m
Cross wind width B=W=30 m

Roof net pressure Cpi=0.2	**Wind at 0° (long face)**
Roof zone A	N1RA0=PeRA0-PiW1w0=-1.68 kN/m²
Roof zone B	N1RB0=PeRB0-PiW1w0=-1.222 kN/m²
Roof zone C	N1RC0=PeRC0-PiW1w0=-0.6872 kN/m²
Roof zone D 1	N1RD10=PeRD10-PiW1w0=0 kN/m²
Roof zone D 2	N1RD20=PeRD20-PiW1w0=-0.3054 kN/m²

Roof net pressure Cpi=0.2	**Wind at 90° (short face)**
Roof zone A	N1RA9=PeRA9-PiW1w90=-1.568 kN/m²
Roof zone B	N1RB9=PeRB9-PiW1w90=-1.14 kN/m²
Roof zone C	N1RC9=PeRC9-PiW1w90=-0.6414 kN/m²
Roof zone D 1	N1RD19=PeRD19-PiW1w90=0 kN/m²
Roof zone D 2	N1RD29=PeRD29-PiW1w90=-0.285 kN/m²

Roof net pressure Cpi=-0.3	**Wind at 0° (long face)**
Roof zone A	N2RA0=PeRA0-PiW2w0=-1.298 kN/m²
Roof zone B	N2RB0=PeRB0-PiW2w0=-0.8399 kN/m²
Roof zone C	N2RC0=PeRC0-PiW2w0=-0.3054 kN/m²
Roof zone D 1	N2RD10=PeRD10-PiW2w0=0.3818 kN/m²
Roof zone D 2	N2RD20=PeRD20-PiW2w0=0.0764 kN/m²

Roof net pressure Cpi=-0.3	**Wind at 90° (short face)**
Roof zone A	N2RA9=PeRA9-PiW2w90=-1.211 kN/m²
Roof zone B	N2RB9=PeRB9-PiW2w90=-0.7839 kN/m²
Roof zone C	N2RC9=PeRC9-PiW2w90=-0.285 kN/m²
Roof zone D 1	N2RD19=PeRD19-PiW2w90=0.3563 kN/m²
Roof zone D 2	N2RD29=PeRD29-PiW2w90=0.0713 kN/m²

Location: Default case 7 (free-standing monopitch roof)

Displacement heights

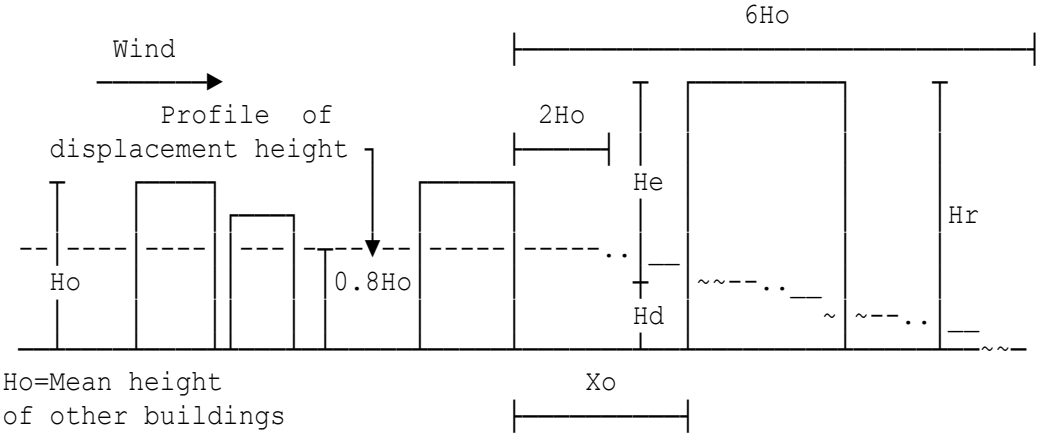

Building reference height	Hr=13.77 m
upwind of site	Ho=6.5 m
Upwind spacing of building	Xo=20 m
Displacement height	Hd=3.8 m
Building type factor	Kb=2
Building height	H=13.77 m

Standard wind loads

Basic wind speed	Vb=21 m/s
Site altitude above mean sea level	deltaS=25 m
Direction factor	Sd=1

	Effective height	**He**	**9.97 m**
DESIGN	**Altitude factor**	**Sa**	**1.025**
SUMMARY	**Direction factor**	**Sd**	**1**
	Seasonal factor	**Ss**	**1**
	Probability factor	**Sp**	**1**
	Dynamic wind pressure	**qs**	**0.8461 kN/m²**

Net pressure coefficients Cp for free-standing monopitch roofs in accordance with BS6399-2:1997 (June 2002)

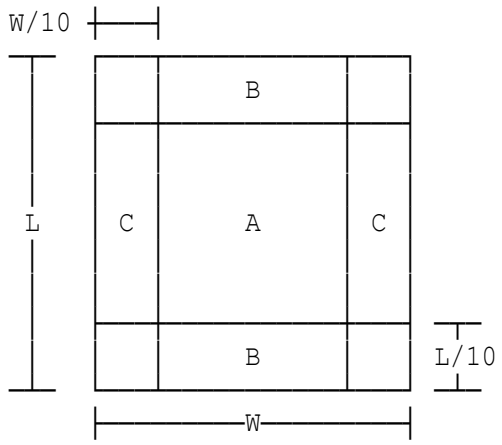

Tables 13 and 15 of the code will be utilised which take account of the combined effect of the wind on both upper and lower surfaces of the canopy for all wind directions.

Pitch of roof (0° to 30°) alpha2=25°

Net downward roof pressure (i.e. normal to the roof)

Local net pressure for zone A CplocA=qs*ClocAp=1.692 kN/m²
Local net pressure for zone B CplocB=qs*ClocBp=2.623 kN/m²
Local net pressure for zone C CplocC=qs*ClocCp=1.946 kN/m²

Net upwind roof pressure (i.e. normal to the roof)

Local net pressure for zone A CplocA=qs*ClocAn=-1.782 kN/m²
Local net pressure for zone B CplocB=qs*ClocBn=-2.193 kN/m²
Local net pressure for zone C CplocC=qs*ClocCn=-2.193 kN/m²

Net pressure on fascias and gables

In addition to pressure normal to the canopy, there will be horizontal loads on the canopy due to the wind pressure on any fascia at the eaves or any gable ends. The pressure for the windward and leeward faces could be taken as follows:

Net pressure (winward face) Cpwin=qs*1.3=1.1 kN/m²
Net pressure (leeward face) Cplee=qs*0.6=0.5077 kN/m²

Location: Default case 8 (free-standing monopitch roof)

Displacement heights

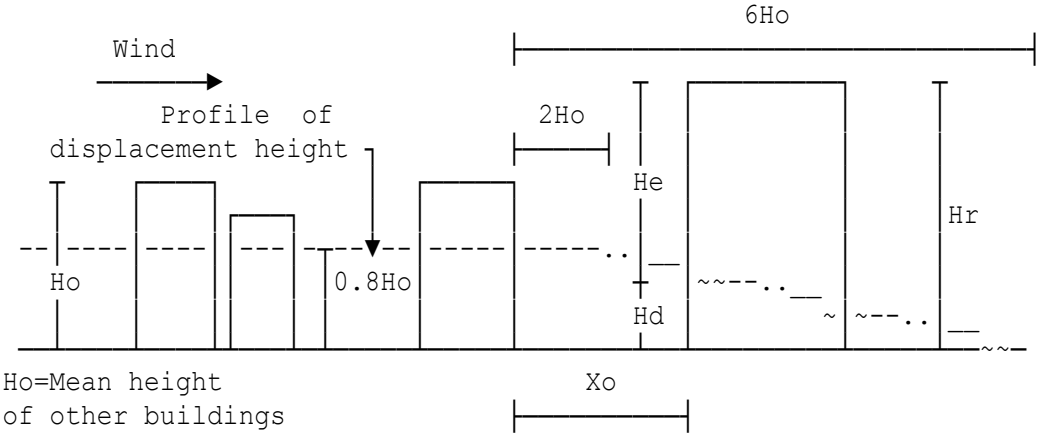

Building reference height	Hr=13.77 m
upwind of site	Ho=6.5 m
Upwind spacing of building	Xo=20 m
Displacement height	Hd=3.8 m
Building type factor	Kb=2
Building height	H=13.77 m

Standard wind loads

Basic wind speed	Vb=21 m/s
Site altitude above mean sea level	deltaS=25 m
Direction factor	Sd=1

	Effective height	**He**	**9.97 m**
DESIGN	**Altitude factor**	**Sa**	**1.025**
SUMMARY	**Direction factor**	**Sd**	**1**
	Seasonal factor	**Ss**	**1**
	Probability factor	**Sp**	**1**
	Dynamic wind pressure	**qs**	**0.8461 kN/m²**

Net pressure coefficients Cp for free-standing monopitch roofs in accordance with BS6399-2:1997 (June 2002)

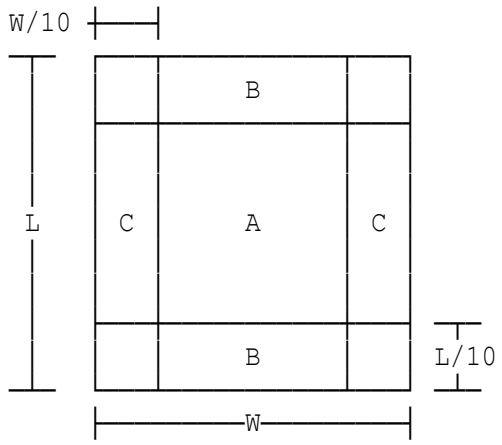

Tables 13 and 15 of the code will be utilised which take account of the combined effect of the wind on both upper and lower surfaces of the canopy for all wind directions.

Pitch of roof (0° to 30°) alpha2=30°

Net downward roof pressure (i.e. normal to the roof)

Local net pressure for zone A CplocA=qs*ClocAp=1.861 kN/m²
Local net pressure for zone B CplocB=qs*ClocBp=2.708 kN/m²
Local net pressure for zone C CplocC=qs*ClocCp=2.031 kN/m²

Net upwind roof pressure (i.e. normal to the roof)

Local net pressure for zone A CplocA=qs*ClocAn=-0.9595 kN/m²
Local net pressure for zone B CplocB=qs*ClocBn=-1.371 kN/m²
Local net pressure for zone C CplocC=qs*ClocCn=-1.576 kN/m²

Net pressure on fascias and gables

In addition to pressure normal to the canopy, there will be horizontal loads on the canopy due to the wind pressure on any fascia at the eaves or any gable ends. The pressure for the windward and leeward faces could be taken as follows:

Net pressure (winward face) Cpwin=qs*1.3=1.1 kN/m²
Net pressure (leeward face) Cplee=qs*0.6=0.5077 kN/m²

Location: Default case 9 (free-standing duopitch roof)

Displacement heights

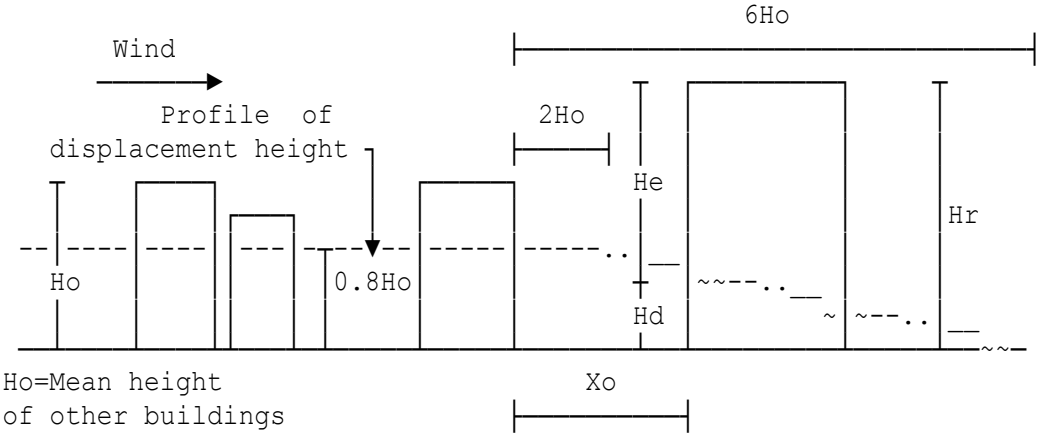

Building reference height	Hr=13.77 m
upwind of site	Ho=6.5 m
Upwind spacing of building	Xo=20 m
Displacement height	Hd=3.8 m
Building type factor	Kb=2
Building height	H=13.77 m

Standard wind loads

Basic wind speed	Vb=21 m/s
Site altitude above mean sea level	deltaS=25 m
Direction factor	Sd=1

	Effective height	**He**	**9.97 m**
DESIGN	**Altitude factor**	**Sa**	**1.025**
SUMMARY	**Direction factor**	**Sd**	**1**
	Seasonal factor	**Ss**	**1**
	Probability factor	**Sp**	**1**
	Dynamic wind pressure	**qs**	**0.8461 kN/m²**

Net pressure coefficients Cp for free-standing duopitch roofs in accordance with BS6399-2:1997 (June 2002)

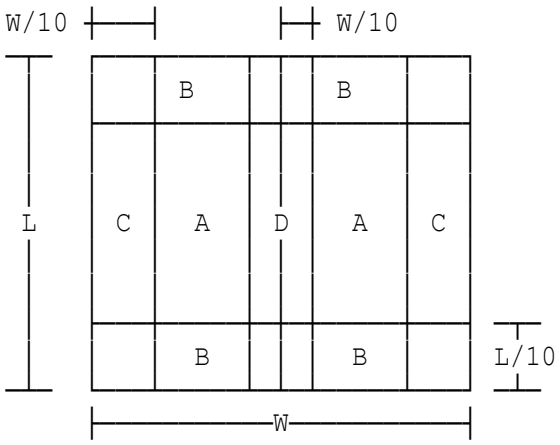

Tables 14 and 15 of the code will be utilised which take account of the combined effect of the wind on both upper and lower surfaces of the canopy for all wind directions.

Pitch of roof (-20° to 30°) alpha3=5°

Net downward roof pressure (i.e. normal to the roof)

Local net pressure for zone A CplocA=qs*ClocAp=0.5077 kN/m²
Local net pressure for zone B CplocB=qs*ClocBp=1.523 kN/m²
Local net pressure for zone C CplocC=qs*ClocCp=1.1 kN/m²
Local net pressure for zone D CplocD=qs*ClocDp=0.3384 kN/m²

Net upwind roof pressure (i.e. normal to the roof)

Local net pressure for zone A CplocA=qs*ClocAn=-0.4112 kN/m²
Local net pressure for zone B CplocB=qs*ClocBn=-0.9595 kN/m²
Local net pressure for zone C CplocC=qs*ClocCn=-0.9595 kN/m²
Local net pressure for zone D CplocD=qs*ClocDn=-0.7539 kN/m²

Net pressure on fascias and gables

In addition to pressure normal to the canopy, there will be horizontal loads on the canopy due to the wind pressure on any fascia at the eaves or any gable ends. The pressure for the windward and leeward faces could be taken as follows:

Net pressure (winward face) Cpwin=qs*1.3=1.1 kN/m²
Net pressure (leeward face) Cplee=qs*0.6=0.5077 kN/m²

Location: Default case 10 (free-standing duopitch roof)

Displacement heights

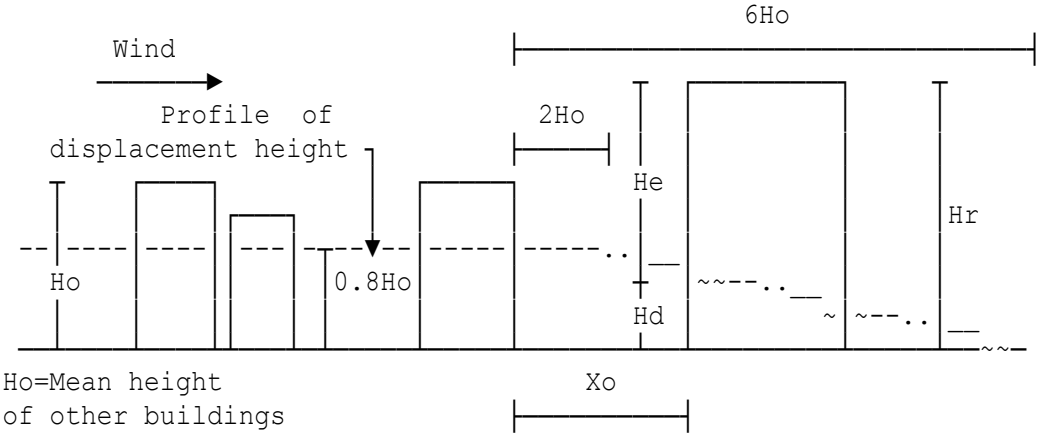

Building reference height	Hr=13.77 m
upwind of site	Ho=6.5 m
Upwind spacing of building	Xo=20 m
Displacement height	Hd=3.8 m
Building type factor	Kb=2
Building height	H=13.77 m

Standard wind loads

Basic wind speed	Vb=21 m/s
Site altitude above mean sea level	deltaS=25 m
Direction factor	Sd=1

	Effective height	**He**	**9.97 m**
DESIGN	**Altitude factor**	**Sa**	**1.025**
SUMMARY	**Direction factor**	**Sd**	**1**
	Seasonal factor	**Ss**	**1**
	Probability factor	**Sp**	**1**
	Dynamic wind pressure	**qs**	**0.8461 kN/m²**

Net pressure coefficients Cp for free-standing duopitch roofs in accordance with BS6399-2:1997 (June 2002)

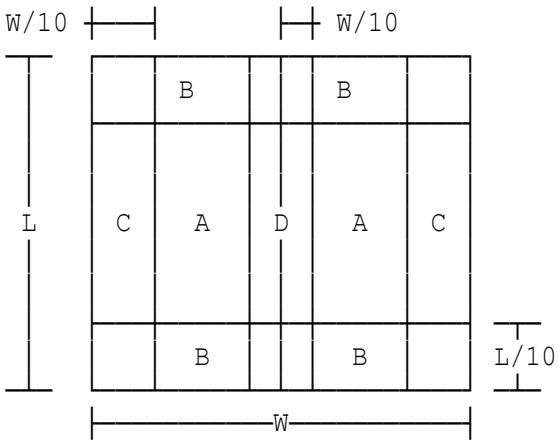

Tables 14 and 15 of the code will be utilised which take account of the combined effect of the wind on both upper and lower surfaces of the canopy for all wind directions.

Pitch of roof (-20° to 30°) alpha3=30°

Net downward roof pressure (i.e. normal to the roof)

Local net pressure for zone A CplocA=qs*ClocAp=1.1 kN/m²
Local net pressure for zone B CplocB=qs*ClocBp=1.608 kN/m²
Local net pressure for zone C CplocC=qs*ClocCp=1.354 kN/m²
Local net pressure for zone D CplocD=qs*ClocDp=0.5923 kN/m²

Net upwind roof pressure (i.e. normal to the roof)

Local net pressure for zone A CplocA=qs*ClocAn=-0.8224 kN/m²
Local net pressure for zone B CplocB=qs*ClocBn=-0.891 kN/m²
Local net pressure for zone C CplocC=qs*ClocCn=-0.7539 kN/m²
Local net pressure for zone D CplocD=qs*ClocDn=-1.097 kN/m²

Net pressure on fascias and gables

In addition to pressure normal to the canopy, there will be horizontal loads on the canopy due to the wind pressure on any fascia at the eaves or any gable ends. The pressure for the windward and leeward faces could be taken as follows:

Net pressure (winward face) Cpwin=qs*1.3=1.1 kN/m²
Net pressure (leeward face) Cplee=qs*0.6=0.5077 kN/m²

Location: Default case 11 (duopitch roof)

Displacement heights

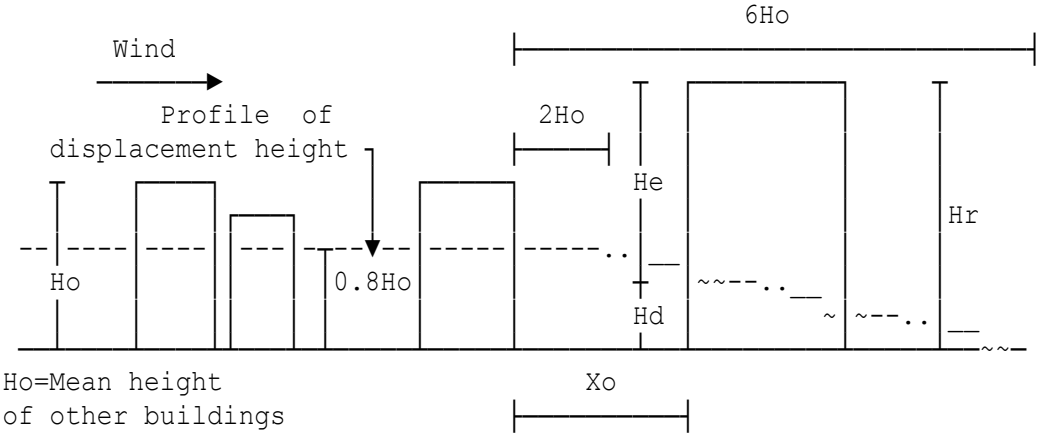

Building reference height	Hr=13.77 m
upwind of site	Ho=6.5 m
Upwind spacing of building	Xo=20 m
Displacement height	Hdw0=3.8 m
Displacement height	Hdw90=3.8 m
Building type factor	Kb=2
Building height	H=13.77 m

Standard wind loads

Basic wind speed	Vb=21 m/s
Site altitude above mean sea level	deltaS=25 m
Direction factor	Sdw0=1
Direction factor	Sdw90=1

	Effective height (long face)	**Hew0**	**9.97 m**
	Effective height (short face)	**Hew90**	**9.97 m**
	Altitude factor (long face)	**Saw0**	**1.025**
DESIGN	**Altitude factor (short face)**	**Saw90**	**1.025**
SUMMARY	**Direction factor (long face)**	**Sdw0**	**1**
	Direction factor (short face)	**Sdw90**	**1**
	Seasonal factor	**Ss**	**1**
	Probability factor	**Sp**	**1**
	Dynamic wind pressure (long face)	**qsw0**	**0.8461 kN/m²**
	Dynamic wind pressure (short face)	**qsw90**	**0.8461 kN/m²**

Dynamic pressure & pressure coeffs on walls of rectangular buildings

Greater horiz.dimens of building L=60 m
Lesser horiz.dimens of building W=20 m
Height of wall including parapet Hr'=13.77 m
Wind acting on long face of building:
Dynamic pressure based on height above ground 9.97 m.
Dynamic pressure @ eaves qew0=0.8461 kN/m²
Wind acting on short face of building:
Dynamic pressure based on height above ground 9.97 m.
Dynamic pressure @ eaves qew90=0.8461 kN/m²

Case 1: Wind on long face of building (i.e. angle Theta = 0°)

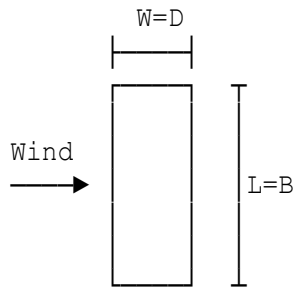

PLAN VIEW

Inwind depth D=20 m
Cross wind width B=60 m

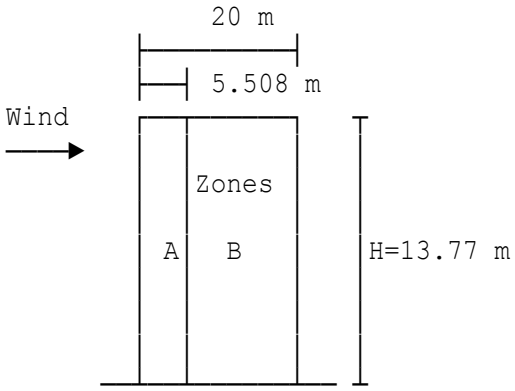

ELEVATION ON SIDE FACE

Key zones for wall pressure data.

Scaling width > D
27.54 m > 20 m

Case 2: Wind on short face of building (i.e. angle Theta = 90°)

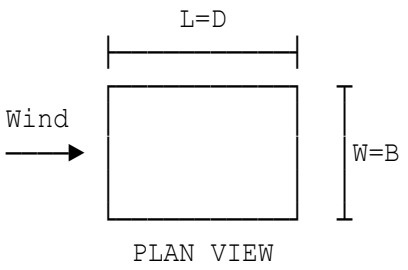

Inwind depth D=60 m
Cross wind width B=20 m

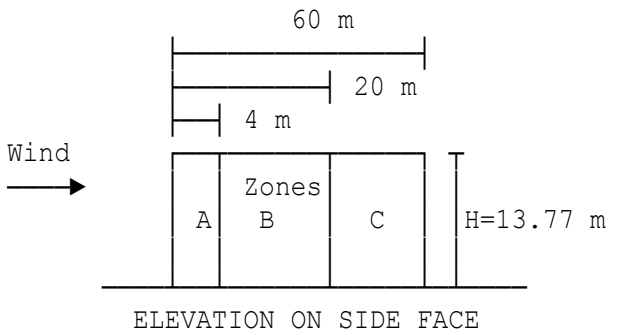

Key zones for wall pressure data.

Wall net pressure Cpi=0.2	**Wind on long face of building**
Windward (front) face	N1LW1=PeLW1-Pi1ww0=0.5181 kN/m²
Leeward (rear) face	N1LW2=PeLW2-Pi1ww0=-0.5923 kN/m²
Isolated Zone A side face	N1LW3=PeLW3-Pi1ww0=-1.269 kN/m²
Isolated Zone B side face	N1LW4=PeLW4-Pi1ww0=-0.8461 kN/m²

Wall net pressure Cpi=0.2	**Wind on short face of building**
Windward (front) face	N1SW1=PeSW1-Pi1ww90=0.3384 kN/m²
Leeward (rear) face	N1SW2=PeSW2-Pi1ww90=-0.5923 kN/m²
Isolated Zone A side face	N1SW3=PeSW3-Pi1ww90=-1.269 kN/m²
Isolated Zone B side face	N1SW4=PeSW4-Pi1ww90=-0.8461 kN/m²
Isolated Zone C side face	N1SW5=PeSW5-Pi1ww90=-0.5923 kN/m²

Wall net pressure Cpi=-0.3	**Wind on long face of building**
Windward (front) face	N2LW1=PeLW1-Pi2ww0=0.9411 kN/m²
Leeward (rear) face	N2LW2=PeLW2-Pi2ww0=-0.1692 kN/m²
Isolated Zone A side face	N2LW3=PeLW3-Pi2ww0=-0.8461 kN/m²
Isolated Zone B side face	N2LW4=PeLW4-Pi2ww0=-0.4231 kN/m²

Wall net pressure Cpi=-0.3	**Wind on short face of building**
Windward (front) face	N2SW1=PeSW1-Pi2ww90=0.7615 kN/m²
Leeward (rear) face	N2SW2=PeSW2-Pi2ww90=-0.1692 kN/m²
Isolated Zone A side face	N2SW3=PeSW3-Pi2ww90=-0.8461 kN/m²
Isolated Zone B side face	N2SW4=PeSW4-Pi2ww90=-0.4231 kN/m²

Isolated Zone C side face N2SW5=PeSW5-Pi2ww90=-0.1692 kN/m²

External pressure coefficients Cpe for duopitch roofs of

rectangular clad buildings to Table 10 of BS6399-2:1997 (June 02)

Case 1: Wind angle Theta = 0°

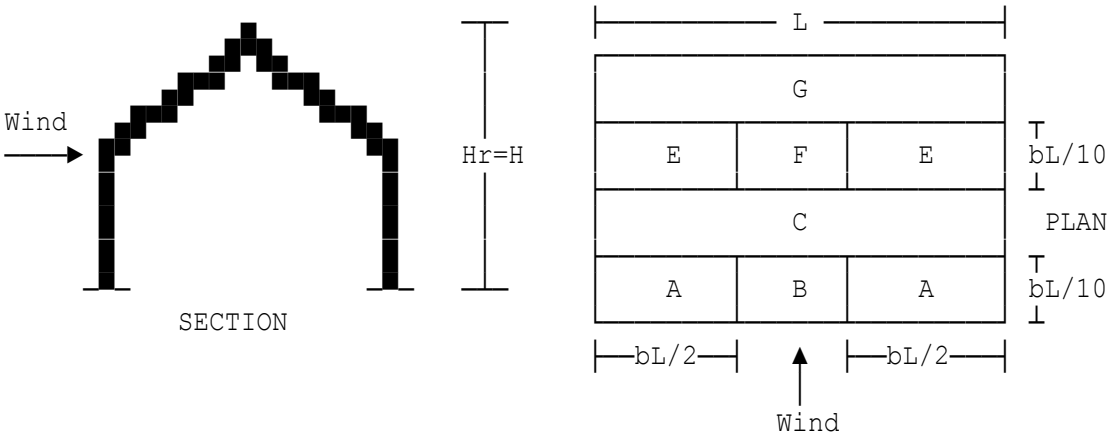

Roof slope to horizontal Dalpha=30°

Case 2: Wind angle Theta = 90°

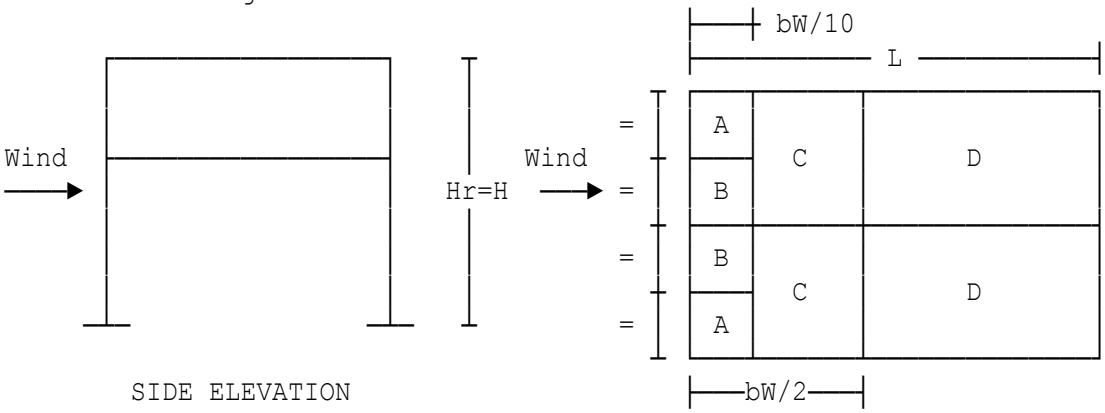

Roof net pressure Cpi=0.2 **Wind at 0° (long face)**

Roof zone A	N1RA0=PeRA0-PiW1w0=-0.5923 kN/m²
Roof zone B	N1RB0=PeRB0-PiW1w0=-0.5923 kN/m²
Roof zone C	N1RC0=PeRC0-PiW1w0=-0.3384 kN/m²
Roof zone E	N1RE0=PeRE0-PiW1w0=-0.9307 kN/m²
Roof zone F	N1RF0=PeRF0-PiW1w0=-0.5923 kN/m²
Roof zone G	N1RG0=PeRG0-PiW1w0=-0.5923 kN/m²
Roof zone A (+Ve Value)	N1RAA0=PRAA0-PiW1w0=0.5077 kN/m²
Roof zone B (+Ve Value)	N1RAB0=PRAB0-PiW1w0=0.2538 kN/m²
Roof zone C (+Ve Value)	N1RAC0=PRAC0-PiW1w0=0.1692 kN/m²
Roof zone E (+Ve Value)	N1RAE0=PRAE0-PiW1w0=-0.9307 kN/m²
Roof zone F (+Ve Value)	N1RAF0=PRAF0-PiW1w0=-0.5923 kN/m²
Roof zone G (+Ve Value)	N1RAG0=PRAG0-PiW1w0=-0.5923 kN/m²

Roof net pressure Cpi=0.2	**Wind at 90° (short face)**
Roof zone A	N1RA9=PeRA9-PiW1w90=-1.185 kN/m²
Roof zone B	N1RB9=PeRB9-PiW1w90=-1.1 kN/m²
Roof zone C	N1RC9=PeRC9-PiW1w90=-0.6769 kN/m²
Roof zone D	N1RD9=PeRD9-PiW1w90=-0.5923 kN/m²

Roof net pressure Cpi=-0.3	**Wind at 0° (long face)**
Roof zone A	N2RA0=PeRA0-PiW2w0=-0.1692 kN/m²
Roof zone B	N2RB0=PeRB0-PiW2w0=-0.1692 kN/m²
Roof zone C	N2RC0=PeRC0-PiW2w0=0.0846 kN/m²
Roof zone E	N2RE0=PeRE0-PiW2w0=-0.5077 kN/m²
Roof zone F	N2RF0=PeRF0-PiW2w0=-0.1692 kN/m²
Roof zone G	N2RG0=PeRG0-PiW2w0=-0.1692 kN/m²
Roof zone A (+Ve Value)	N2RAA0=PRAA0-PiW2w0=0.9307 kN/m²
Roof zone B (+Ve Value)	N2RAB0=PRAB0-PiW2w0=0.6769 kN/m²
Roof zone C (+Ve Value)	N2RAC0=PRAC0-PiW2w0=0.5923 kN/m²
Roof zone E (+Ve Value)	N2RAE0=PRAE0-PiW2w0=-0.5077 kN/m²
Roof zone F (+Ve Value)	N2RAF0=PRAF0-PiW2w0=-0.1692 kN/m²
Roof zone G (+Ve Value)	N2RAG0=PRAG0-PiW2w0=-0.1692 kN/m²

Roof net pressure Cpi=-0.3	**Wind at 90° (short face)**
Roof zone A	N2RA9=PeRA9-PiW2w90=-0.7615 kN/m²
Roof zone B	N2RB9=PeRB9-PiW2w90=-0.6769 kN/m²
Roof zone C	N2RC9=PeRC9-PiW2w90=-0.2538 kN/m²
Roof zone D	N2RD9=PeRD9-PiW2w90=-0.1692 kN/m²

Location: Default case 12 (duopitch roof)

Displacement heights

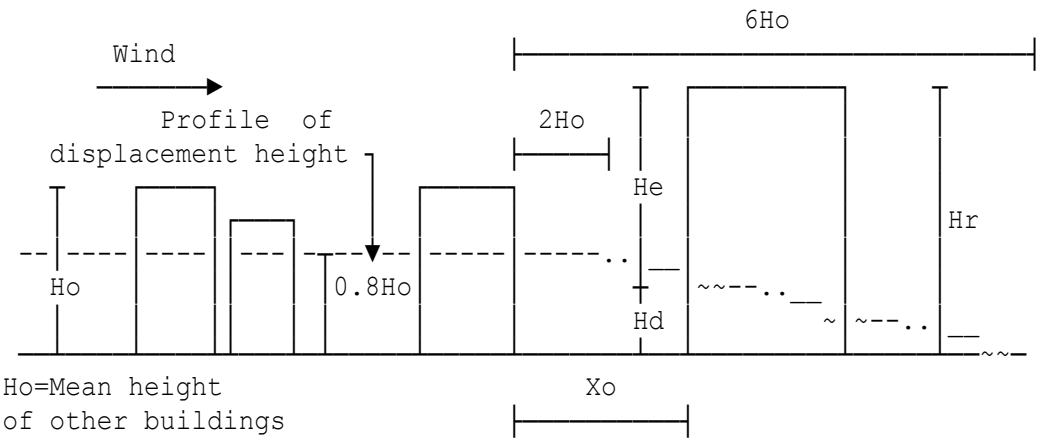

Building reference height	Hr=4.3 m
upwind of site	Ho=0.5 m
Upwind spacing of building	Xo=20 m
Displacement height	Hdw0=0 m
Displacement height	Hdw90=0 m
Building type factor	Kb=2
Building height	H=4.3 m

Standard wind loads

Basic wind speed	Vb=24 m/s
Site altitude above mean sea level	deltaS=46 m

Topography is significant - Wind on long face of building

Slope details and site location relative to crest

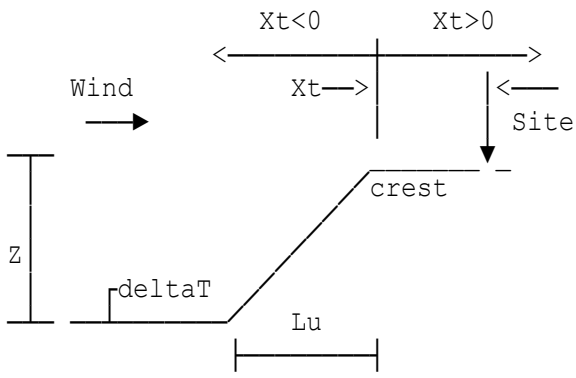

Site altitude is 46 m above mean sea level.

Xt is positive if site is located downwind of crest.

Xt is negative if site is located upwind of crest.

Height to crest Z=45 m

Direction factor Sdw0=1
Direction factor Sdw90=1

	Effective height (long face)	**Hew0**	**4.3 m**
	Effective height (short face)	**Hew90**	**4.3 m**
	Altitude factor (long face)	**Saw0**	**1.18**
DESIGN	**Altitude factor (short face)**	**Saw90**	**1.046**
SUMMARY	**Direction factor (long face)**	**Sdw0**	**1**
	Direction factor (short face)	**Sdw90**	**1**
	Seasonal factor	**Ss**	**1**
	Probability factor	**Sp**	**1**
	Dynamic wind pressure (long face)	**qsw0**	**1.206 kN/m²**
	Dynamic wind pressure (short face)	**qsw90**	**0.9474 kN/m²**

Dynamic pressure & pressure coeffs on walls of rectangular buildings

Greater horiz.dimens of building L=60 m
Lesser horiz.dimens of building W=20 m
Height of wall including parapet Hr'=4.3 m
Wind acting on long face of building:
Dynamic pressure based on height above ground 4.3 m.
Dynamic pressure @ eaves qew0=1.206 kN/m²
Wind acting on short face of building:
Dynamic pressure based on height above ground 4.3 m.
Dynamic pressure @ eaves qew90=0.9474 kN/m²

Case 1: Wind on long face of building (i.e. angle Theta = 0°)

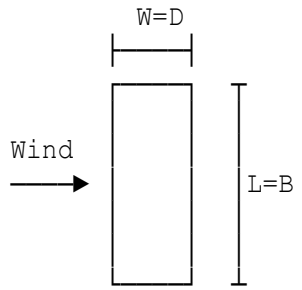

PLAN VIEW

Inwind depth D=20 m
Cross wind width B=60 m

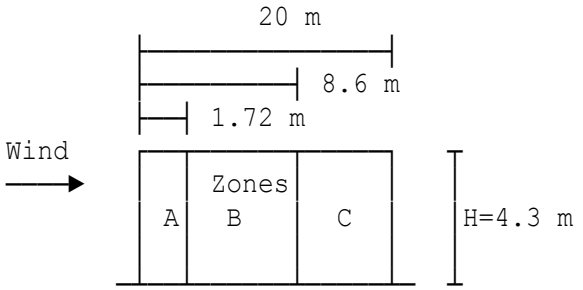

ELEVATION ON SIDE FACE

Key zones for wall pressure data.

Case 2: Wind on short face of building (i.e. angle Theta = 90°)

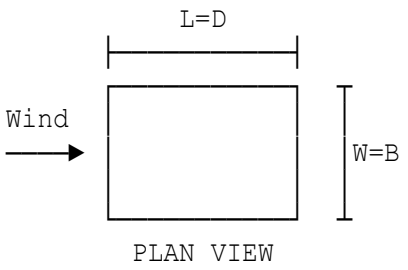

Inwind depth D=60 m
Cross wind width B=20 m

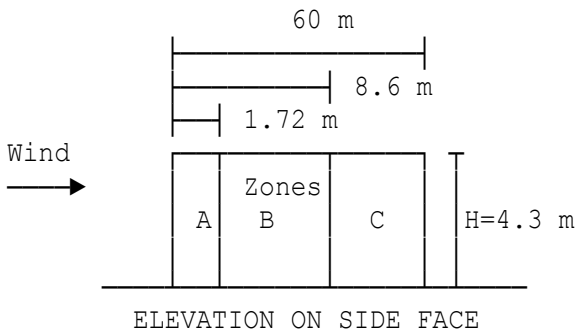

Key zones for wall pressure data.

Wall net pressure Cpi=0.2	**Wind on long face of building**
Windward (front) face	N1LW1=PeLW1-Pi1ww0=0.4824 kN/m²
Leeward (rear) face	N1LW2=PeLW2-Pi1ww0=-0.8442 kN/m²
Isolated Zone A side face	N1LW3=PeLW3-Pi1ww0=-1.809 kN/m²
Isolated Zone B side face	N1LW4=PeLW4-Pi1ww0=-1.206 kN/m²
Isolated Zone C side face	N1LW5=PeLW5-Pi1ww0=-0.8442 kN/m²

Wall net pressure Cpi=0.2	**Wind on short face of building**
Windward (front) face	N1SW1=PeSW1-Pi1ww90=0.379 kN/m²
Leeward (rear) face	N1SW2=PeSW2-Pi1ww90=-0.6632 kN/m²
Isolated Zone A side face	N1SW3=PeSW3-Pi1ww90=-1.421 kN/m²
Isolated Zone B side face	N1SW4=PeSW4-Pi1ww90=-0.9474 kN/m²
Isolated Zone C side face	N1SW5=PeSW5-Pi1ww90=-0.6632 kN/m²

Wall net pressure Cpi=-0.3	**Wind on long face of building**
Windward (front) face	N2LW1=PeLW1-Pi2ww0=1.085 kN/m²
Leeward (rear) face	N2LW2=PeLW2-Pi2ww0=-0.2412 kN/m²
Isolated Zone A side face	N2LW3=PeLW3-Pi2ww0=-1.206 kN/m²
Isolated Zone B side face	N2LW4=PeLW4-Pi2ww0=-0.603 kN/m²
Isolated Zone C side face	N2LW5=PeLW5-Pi2ww0=-0.2412 kN/m²

Wall net pressure Cpi=-0.3	**Wind on short face of building**
Windward (front) face	N2SW1=PeSW1-Pi2ww90=0.8527 kN/m²
Leeward (rear) face	N2SW2=PeSW2-Pi2ww90=-0.1895 kN/m²

Isolated Zone A side face N2SW3=PeSW3-Pi2ww90=-0.9474 kN/m²
Isolated Zone B side face N2SW4=PeSW4-Pi2ww90=-0.4737 kN/m²
Isolated Zone C side face N2SW5=PeSW5-Pi2ww90=-0.1895 kN/m²

External pressure coefficients Cpe for duopitch roofs of rectangular clad buildings to Table 10 of BS6399-2:1997 (June 02)

Case 1: Wind angle Theta = 0°

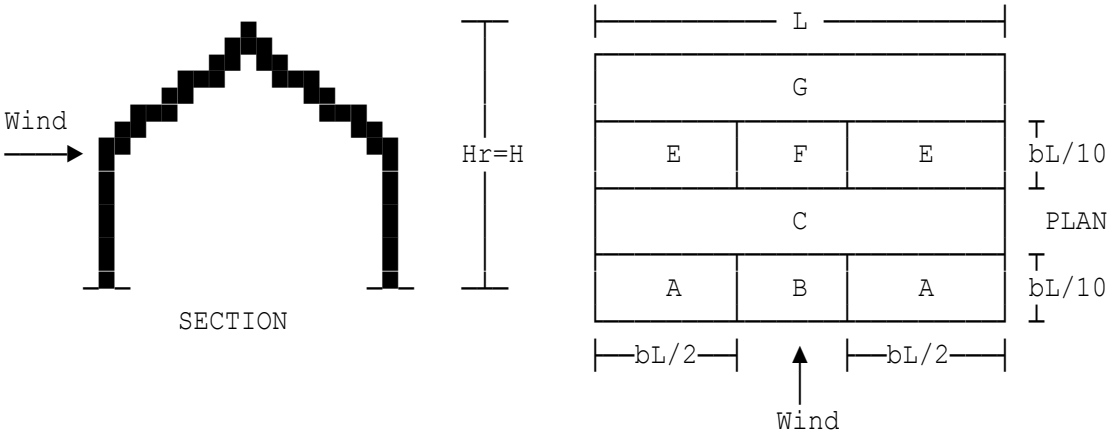

Roof slope to horizontal Dalpha=30°

Case 2: Wind angle Theta = 90°

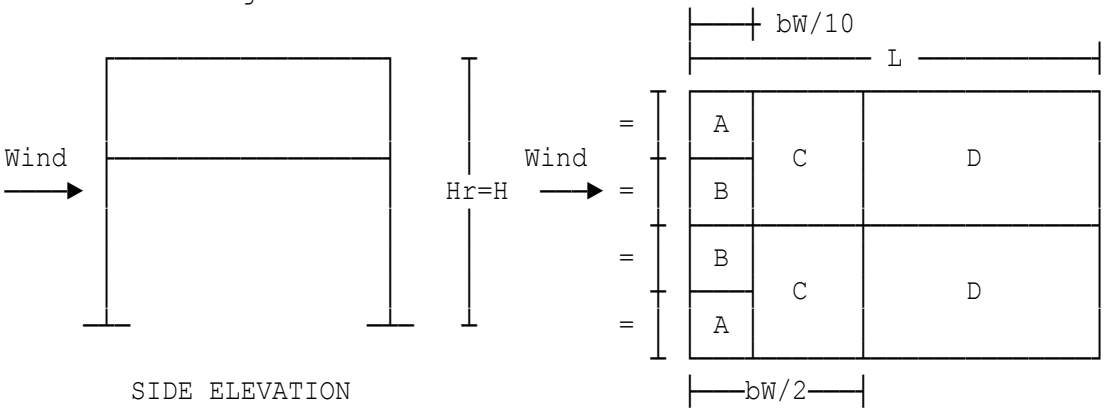

Roof net pressure Cpi=0.2 Wind at 0° (long face)

Roof zone A N1RA0=PeRA0-PiW1w0=-0.844 kN/m²
Roof zone B N1RB0=PeRB0-PiW1w0=-0.844 kN/m²
Roof zone C N1RC0=PeRC0-PiW1w0=-0.4823 kN/m²
Roof zone E N1RE0=PeRE0-PiW1w0=-1.326 kN/m²
Roof zone F N1RF0=PeRF0-PiW1w0=-0.844 kN/m²
Roof zone G N1RG0=PeRG0-PiW1w0=-0.844 kN/m²
Roof zone A (+Ve Value) N1RAA0=PRAA0-PiW1w0=0.7234 kN/m²
Roof zone B (+Ve Value) N1RAB0=PRAB0-PiW1w0=0.3617 kN/m²
Roof zone C (+Ve Value) N1RAC0=PRAC0-PiW1w0=0.2411 kN/m²
Roof zone E (+Ve Value) N1RAE0=PRAE0-PiW1w0=-1.326 kN/m²
Roof zone F (+Ve Value) N1RAF0=PRAF0-PiW1w0=-0.844 kN/m²
Roof zone G (+Ve Value) N1RAG0=PRAG0-PiW1w0=-0.844 kN/m²

Roof net pressure Cpi=0.2 **Wind at 90° (short face)**

Roof zone A	N1RA9=PeRA9-PiW1w90=-1.326 kN/m²
Roof zone B	N1RB9=PeRB9-PiW1w90=-1.232 kN/m²
Roof zone C	N1RC9=PeRC9-PiW1w90=-0.7579 kN/m²
Roof zone D	N1RD9=PeRD9-PiW1w90=-0.6632 kN/m²

Roof net pressure Cpi=-0.3 **Wind at 0° (long face)**

Roof zone A	N2RA0=PeRA0-PiW2w0=-0.2411 kN/m²
Roof zone B	N2RB0=PeRB0-PiW2w0=-0.2411 kN/m²
Roof zone C	N2RC0=PeRC0-PiW2w0=0.1206 kN/m²
Roof zone E	N2RE0=PeRE0-PiW2w0=-0.7234 kN/m²
Roof zone F	N2RF0=PeRF0-PiW2w0=-0.2411 kN/m²
Roof zone G	N2RG0=PeRG0-PiW2w0=-0.2411 kN/m²
Roof zone A (+Ve Value)	N2RAA0=PRAA0-PiW2w0=1.326 kN/m²
Roof zone B (+Ve Value)	N2RAB0=PRAB0-PiW2w0=0.9645 kN/m²
Roof zone C (+Ve Value)	N2RAC0=PRAC0-PiW2w0=0.844 kN/m²
Roof zone E (+Ve Value)	N2RAE0=PRAE0-PiW2w0=-0.7234 kN/m²
Roof zone F (+Ve Value)	N2RAF0=PRAF0-PiW2w0=-0.2411 kN/m²
Roof zone G (+Ve Value)	N2RAG0=PRAG0-PiW2w0=-0.2411 kN/m²

Roof net pressure Cpi=-0.3 **Wind at 90° (short face)**

Roof zone A	N2RA9=PeRA9-PiW2w90=-0.8527 kN/m²
Roof zone B	N2RB9=PeRB9-PiW2w90=-0.7579 kN/m²
Roof zone C	N2RC9=PeRC9-PiW2w90=-0.2842 kN/m²
Roof zone D	N2RD9=PeRD9-PiW2w90=-0.1895 kN/m²

Location: Default case 13 (free-standing wall)

Free-standing wall details

Effective height of free-standing wall He=5 m

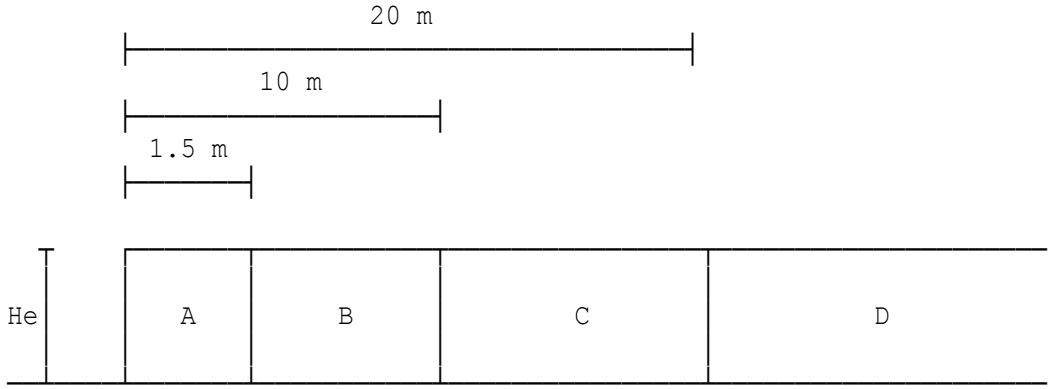

ELEVATION ON FREE-STANDING WALL

Standard wind loads

Basic wind speed Vb=21 m/s
Site altitude above mean sea level deltaS=25 m

Slope details and site location relative to crest

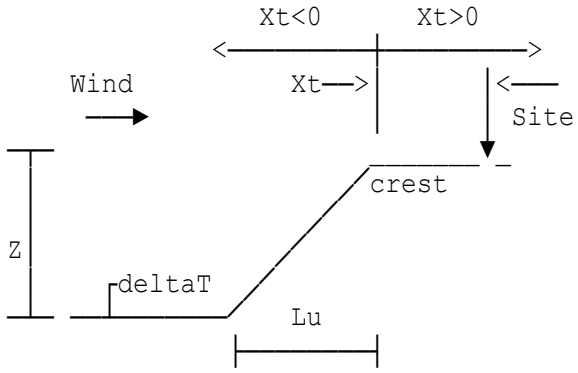

Site altitude is 25 m above mean sea level.

Xt is positive if site is located downwind of crest.

Xt is negative if site is located upwind of crest.

Height to crest Z=10 m
Direction factor Sd=1

	Effective height	**He**	**5 m**
DESIGN	**Altitude factor**	**Sa**	**1.227**
SUMMARY	**Direction factor**	**Sd**	**1**
	Seasonal factor	**Ss**	**1**
	Probability factor	**Sp**	**1**
	Dynamic wind pressure	**qs**	**0.9121 kN/m²**

Size effect factors

Length of wall	Lwall=25 m
Length of the return corner	rcornL=5 m

Net pressure on wall

Net pressure on wall zone A	Cpwin=qs*CpA*Ca=1.341 kN/m²
Net pressure on wall zone B	Cpwin=qs*CpB*Ca=1.149 kN/m²
Net pressure on wall zone C	Cpwin=qs*CpC*Ca=1.094 kN/m²
Net pressure on wall zone D	Cpwin=qs*CpD*Ca=1.094 kN/m²

Location: Default case 14 (signboard)

Signboard details

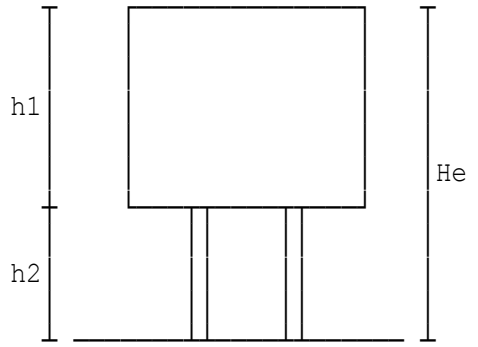

ELEVATION ON SIGNBOARD

Effective height of signboard He=5 m
Depth of signboard h1=3 m

Standard wind loads

Basic wind speed Vb=21 m/s
Site altitude above mean sea level deltaS=25 m

Slope details and site location relative to crest

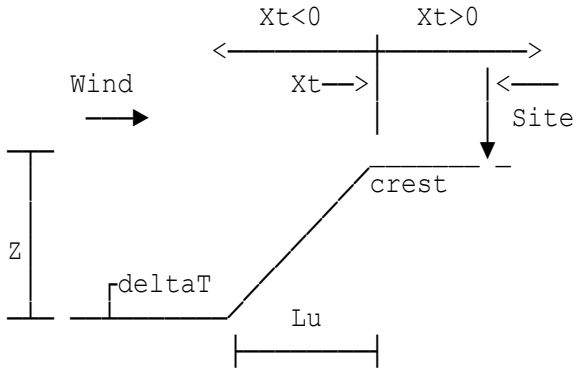

Site altitude is 25 m above mean sea level.

Xt is positive if site is located downwind of crest.

Xt is negative if site is located upwind of crest.

Height to crest Z=10 m
Direction factor Sd=1

	Effective height	**He**	**5 m**
DESIGN	**Altitude factor**	**Sa**	**1.149**
SUMMARY	**Direction factor**	**Sd**	**1**
	Seasonal factor	**Ss**	**1**
	Probability factor	**Sp**	**1**
	Dynamic wind pressure	**qs**	**0.7998 kN/m²**

Size effect factors

Clause 2.1.3.4 in BS6399 offers the user to input diagonal dimensions to derive a size effect factor. This program will use the simple method where the size effect factor is set to 1.0.

Size effect factor	Ca=1.0
Net pressure coefficient	Cpwf=1.8
Net pressure on signboard	Cpwin=qs*Cpwf*Ca=1.44 kN/m²

Location: Default case 15 (signboard)

Signboard details

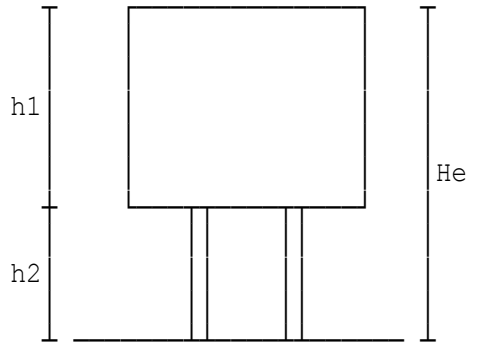

ELEVATION ON SIGNBOARD

Effective height of signboard He=4 m
Depth of signboard h1=3.5 m

Standard wind loads

Basic wind speed Vb=21 m/s
Site altitude above mean sea level deltaS=25 m

Slope details and site location relative to crest

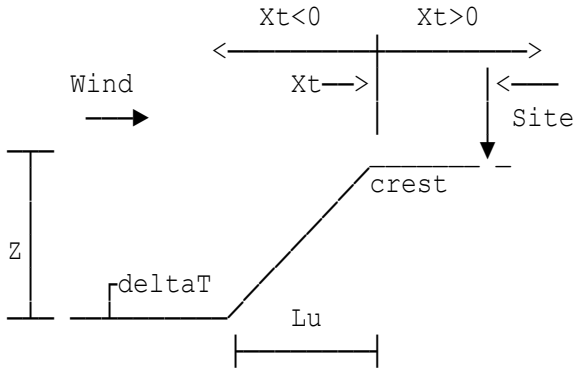

Site altitude is 25 m above mean sea level.

Xt is positive if site is located downwind of crest.

Xt is negative if site is located upwind of crest.

Height to crest Z=10 m
Direction factor Sd=1

	Effective height	**He**	**4 m**
DESIGN	**Altitude factor**	**Sa**	**1.149**
SUMMARY	**Direction factor**	**Sd**	**1**
	Seasonal factor	**Ss**	**1**
	Probability factor	**Sp**	**1**
	Dynamic wind pressure	**qs**	**0.6905 kN/m²**

Size effect factors

Clause 2.1.3.4 in BS6399 offers the user to input diagonal dimensions to derive a size effect factor. This program will use the simple method where the size effect factor is set to 1.0.

Size effect factor Ca=1.0

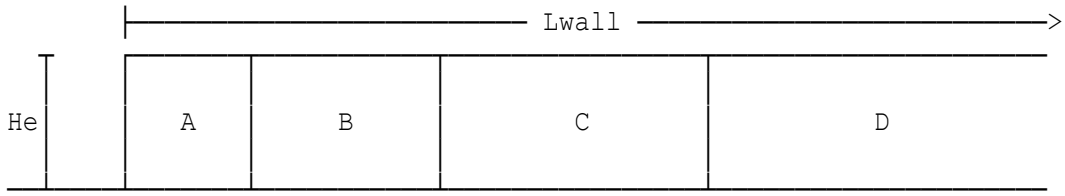

ELEVATION ON FREE-STANDING WALL

Length of wall Lwall=10 m

Net pressure on wall

Net pressure on signboard zone A Cpwin=qs*CpA*Ca=1.409 kN/m²
Net pressure on signboard zone B Cpwin=qs*CpB*Ca=0.8701 kN/m²
Net pressure on signboard zone C Cpwin=qs*CpC*Ca=0.8287 kN/m²
Net pressure on signboard zone D Cpwin=qs*CpD*Ca=0.8287 kN/m²

Location: Default case 16 (free-standing parapet)

Free-standing parapet details

Effective height of free-standing parapet He=1 m

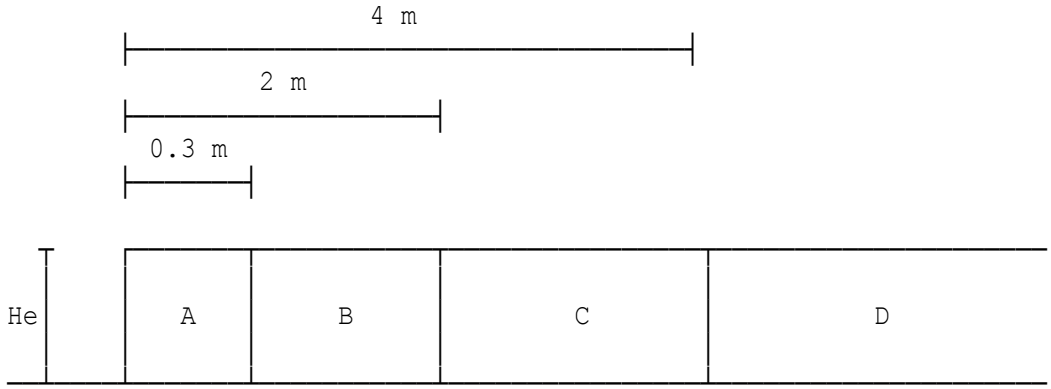

ELEVATION ON FREE-STANDING PARAPET

Standard wind loads

Basic wind speed Vb=24 m/s
Site altitude above mean sea level deltaS=25 m

Slope details and site location relative to crest

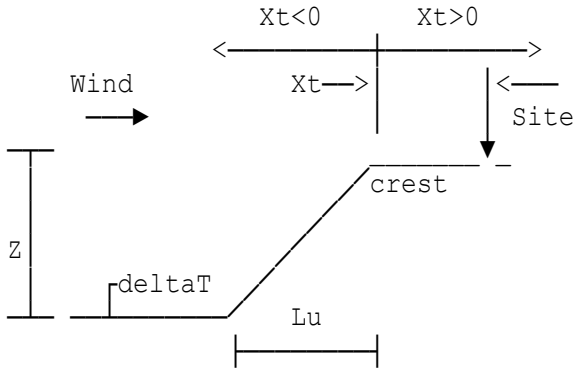

Site altitude is 25 m above mean sea level.

Xt is positive if site is located downwind of crest.

Xt is negative if site is located upwind of crest.

Height to crest Z=10 m
Direction factor Sd=1

	Effective height	**He**	**1 m**
DESIGN	**Altitude factor**	**Sa**	**1.149**
SUMMARY	**Direction factor**	**Sd**	**1**
	Seasonal factor	**Ss**	**1**
	Probability factor	**Sp**	**1**
	Dynamic wind pressure	**qs**	**0.6469 kN/m²**

Size effect factors

Length of wall Lwall=10 m

Net pressure on parapet

Net pressure on parapet zone A Cpwin=qs*CpA*Ca=1.979 kN/m²
Net pressure on parapet zone B Cpwin=qs*CpB*Ca=1.223 kN/m²
Net pressure on parapet zone C Cpwin=qs*CpC*Ca=0.9897 kN/m²
Net pressure on parapet zone D Cpwin=qs*CpD*Ca=0.7762 kN/m²

Location: Default case 17

Displacement heights

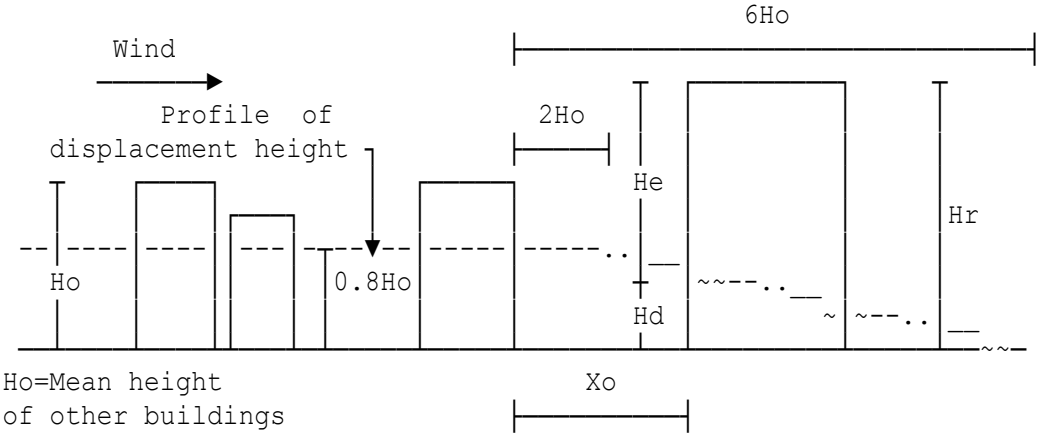

Ho=Mean height
of other buildings

Building reference height	Hr=9.64 m
upwind of site	Ho=5 m
Upwind spacing of building	Xo=20 m
Displacement height	Hdw0=0 m
Displacement height	Hdw90=0 m
Building type factor	Kb=2
Building height	H=9.64 m

Standard wind loads

Basic wind speed	Vb=23.5 m/s
Site altitude above mean sea level	deltaS=123.6 m

Topography is significant in both orthogonal directions

Slope details and site location relative to crest

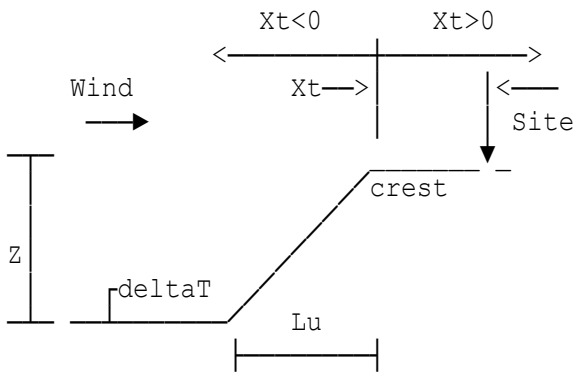

Site altitude is 123.6 m above mean sea level.

Xt is positive if site is located downwind of crest.

Xt is negative if site is located upwind of crest.

Height to crest Z=3.6 m

Direction factor Sdw0=0.995
Direction factor Sdw90=1

	Effective height (long face)	**Hew0**	**9.64 m**
	Effective height (short face)	**Hew90**	**9.64 m**
	Altitude factor (long face)	**Saw0**	**1.166**
DESIGN	**Altitude factor (short face)**	**Saw90**	**1.166**
SUMMARY	**Direction factor (long face)**	**Sdw0**	**0.995**
	Direction factor (short face)	**Sdw90**	**1**
	Seasonal factor	**Ss**	**1**
	Probability factor	**Sp**	**1**
	Dynamic wind pressure (long face)	**qsw0**	**1.178 kN/m²**
	Dynamic wind pressure (short face)	**qsw90**	**1.19 kN/m²**

Location: Default case 18

Displacement heights

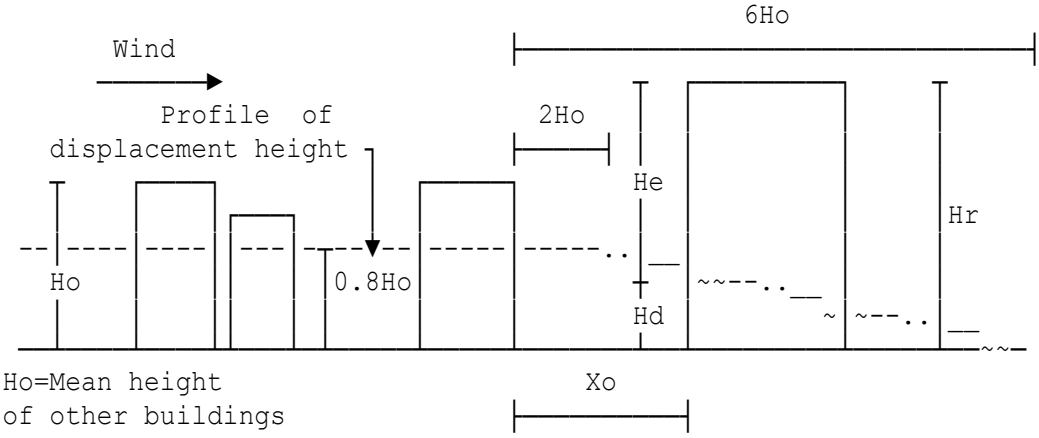

Building reference height	Hr=9.64 m
upwind of site	Ho=5 m
Upwind spacing of building	Xo=20 m
Displacement height	Hdw0=7.57 m
Displacement height	Hdw90=0 m
Building type factor	Kb=2
Building height	H=9.64 m

Standard wind loads

Basic wind speed	Vb=23.5 m/s
Site altitude above mean sea level	deltaS=123.6 m

Topography is significant - Wind on short face of building

Slope details and site location relative to crest

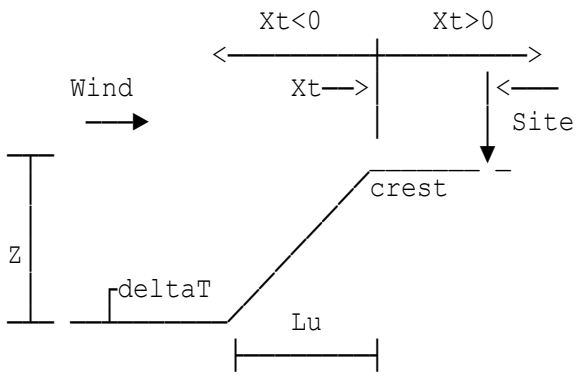

Site altitude is 123.6 m above mean sea level.

Xt is positive if site is located downwind of crest.

Xt is negative if site is located upwind of crest.

Height to crest Z=3.6 m

Direction factor Sdw0=0.83
Direction factor Sdw90=0.8

	Effective height (long face)	**Hew0**	**3.856 m**
	Effective height (short face)	**Hew90**	**9.64 m**
	Altitude factor (long face)	**Saw0**	**1.124**
DESIGN	**Altitude factor (short face)**	**Saw90**	**1.166**
SUMMARY	**Direction factor (long face)**	**Sdw0**	**0.83**
	Direction factor (short face)	**Sdw90**	**0.8**
	Seasonal factor	**Ss**	**1**
	Probability factor	**Sp**	**1**
	Dynamic wind pressure (long face)	**qsw0**	**0.5987 kN/m²**
	Dynamic wind pressure (short face)	**qsw90**	**0.8949 kN/m²**

Location: Default case 19 Flat roof (topography critical, H > 58m)

Displacement heights

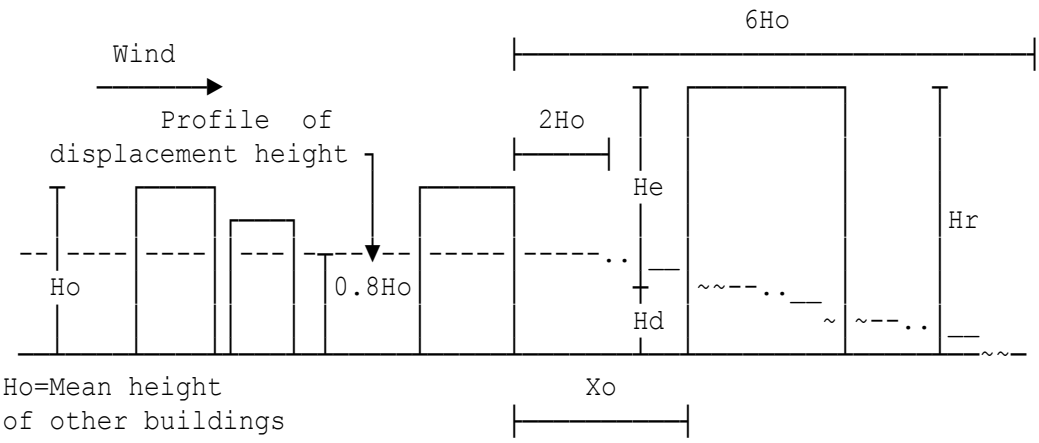

Building reference height	Hr=58 m
Displacement height	Hdw0=0 m
Displacement height	Hdw90=0 m
Building type factor	Kb=2
Building height	H=58 m

Standard wind loads

Basic wind speed	Vb=22.5 m/s
Site altitude above mean sea level	deltaS=35 m

Topography is significant - Wind on long face of building

Slope details and site location relative to crest

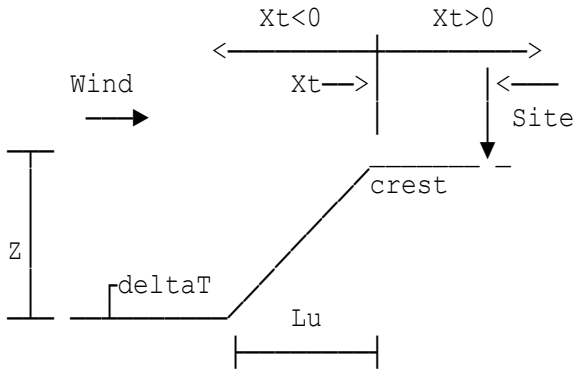

Site altitude is 35 m above mean sea level.

Xt is positive if site is located downwind of crest.

Xt is negative if site is located upwind of crest.

Height to crest Z=10 m

Direction factor Sdw0=0.85
Direction factor Sdw90=0.85
Seasonal factor Ss=0.86
Probability factor Sp=1.05

	Effective height (long face)	**Hew0**	**58 m**
	Effective height (short face)	**Hew90**	**58 m**
	Altitude factor (long face)	**Saw0**	**1.061**
DESIGN	**Altitude factor (short face)**	**Saw90**	**1.035**
SUMMARY	**Direction factor (long face)**	**Sdw0**	**0.85**
	Direction factor (short face)	**Sdw90**	**0.85**
	Seasonal factor	**Ss**	**0.86**
	Probability factor	**Sp**	**1.05**
	Dynamic wind pressure (long face)	**qsw0**	**0.8675 kN/m²**
	Dynamic wind pressure (short face)	**qsw90**	**0.8255 kN/m²**

Dynamic pressure & pressure coeffs on walls of rectangular buildings

Greater horiz.dimens of building L=150 m
Lesser horiz.dimens of building W=40.5 m
Height of wall including parapet Hr'=58 m
Wind acting on long face of building:
Dynamic pressure based on height above ground 58 m.
Dynamic pressure @ eaves qew0=0.8675 kN/m²
Wind acting on short face of building:
Dynamic pressure based on height above ground 58 m.
Dynamic pressure @ eaves qew90=0.8255 kN/m²
Diagonal dimension of Ext long wall dima1=25 m
Diagonal dimension of Ext short wall dima2=35 m

Case 1: Wind on long face of building (i.e. angle Theta = 0°)

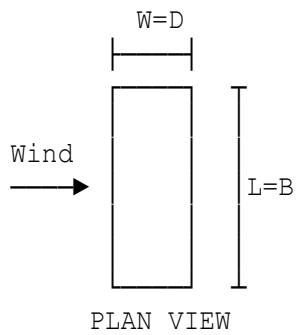

Inwind depth D=40.5 m
Cross wind width B=150 m

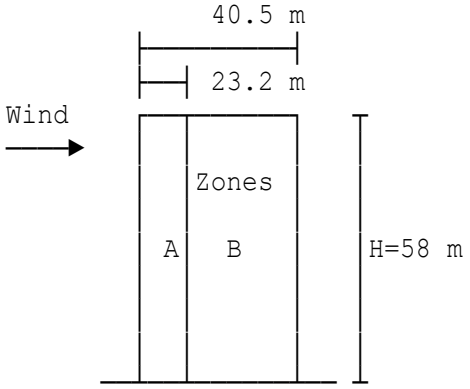

ELEVATION ON SIDE FACE

Key zones for wall pressure data.

Scaling width > D
116 m > 40.5 m

Case 2: Wind on short face of building (i.e. angle Theta = 90°)

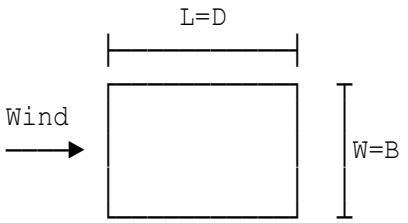

PLAN VIEW

Inwind depth D=150 m
Cross wind width B=40.5 m

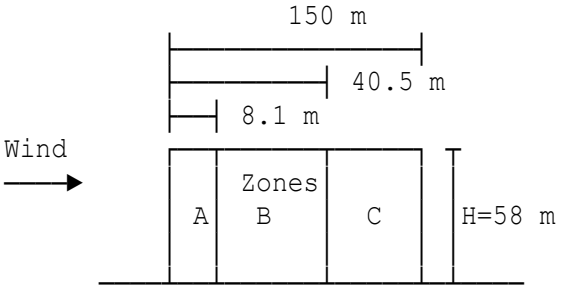

ELEVATION ON SIDE FACE

Key zones for wall pressure data.

Internal volume of storey SinVol=40000 m³

External pressure coefficients Cpe for flat roofs of rectangular clad buildings to Table 8 of BS6399-2:1997 (June 02)

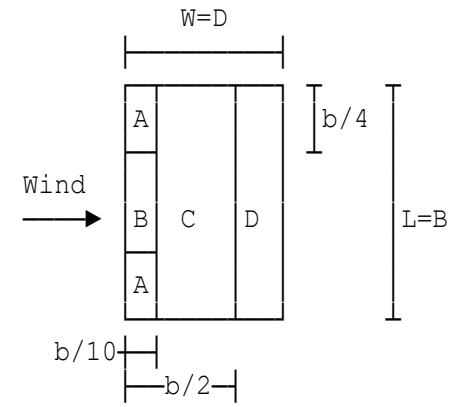

PLAN VIEW

Wind on long face (θ=0°)

Inwind depth D=W=40.5 m
Cross wind width B=L=150 m

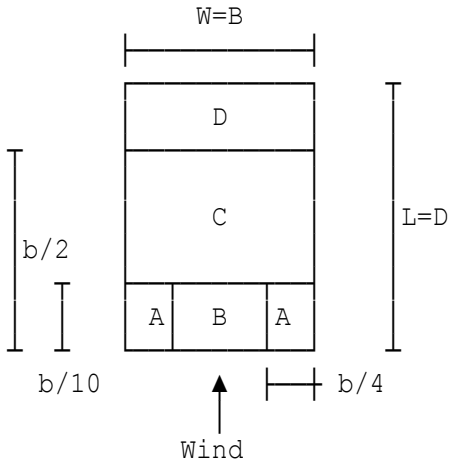

PLAN VIEW

Wind on short face (θ=90°)

Inwind depth D=L=150 m
Cross wind width B=W=40.5 m

Diagonal dimension of roof at 0 degree dima4=5 m
Diagonal dimension of roof at 90 degree dima5=5 m

Location: Wind loads

Obstruction height and upwind spacing

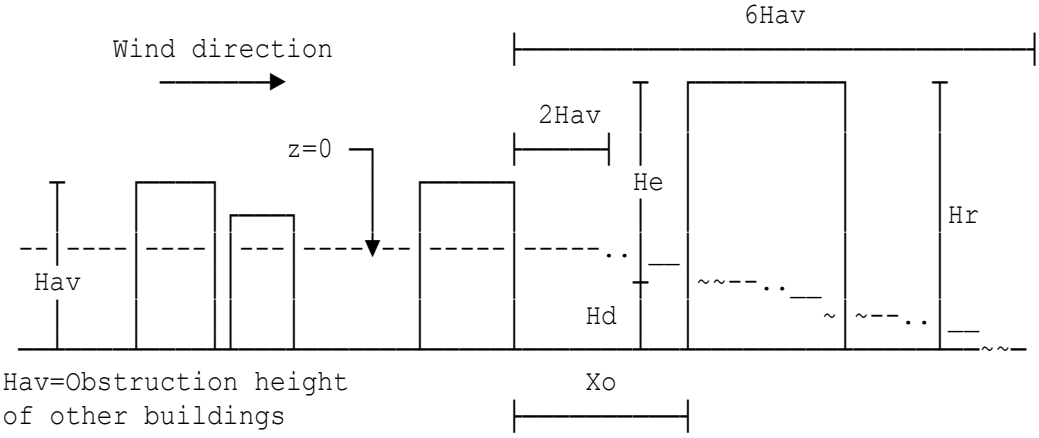

Hav=Obstruction height
of other buildings

Building reference height	Hr=13.77 m
buildings upwind of site	Hav=6.5 m
Upwind spacing of building	Xo=20 m
Displacement height (wind θ=0°)	Hd(0)=3.8 m
Displacement height (wind θ=90°)	Hd(90)=3.8 m
Building height	H=13.77 m

Standard wind loads

Basic wind velocity (Fig. NA.1)	Vbmap=21.5 m/s
Altitude above mean sea level	Asite=25 m
Directional factor (wind θ=0°)	Cdi(0)=1
Directional factor (wind θ=90°)	Cdi(90)=0.73
Distance upwind to shoreline	Dis(0)=2.5 km
Distance inside town terrain	Dit(0)=2.5 km
Distance upwind to shoreline	Dis(90)=2.5 km
Distance inside town terrain	Dit(90)=2.5 km
Probability factor	Cp=1

	Effective height (long face)	**He(0)**	**9.97 m**
	Effective height (short face)	**He(90)**	**9.97 m**
	Altitude factor (long face)	**Ca(0)**	**1.025**
DESIGN	**Altitude factor (short face)**	**Ca(90)**	**1.025**
SUMMARY	**Direction factor (long face)**	**Cdi(0)**	**1**
	Direction factor (short face)	**Cdi(90)**	**0.73**
	Seasonal factor	**Cseason**	**1**
	Probability factor	**Cp**	**1**
	Long face peak velocity pressure	**qp(0)**	**0.6726 kN/m²**
	Short face peak velocity pressure	**qp(90)**	**0.3584 kN/m²**

Peak velocity pressure & pressure coefficients

on walls of rectangular buildings

Height of wall including parapet Hr'=13.77 m
Wind acting on long face of building (wind θ=0°):
Peak velocity pressure based on height above ground 9.97 m.
Peak velocity pressure @ eaves qpe(0)=0.6726 kN/m²
Wind acting on short face of building (wind θ=90°):
Peak velocity pressure based on height above ground 9.97 m.
Peak velocity pressure @ eaves qpe(90)=0.3584 kN/m²

Case 1: Wind on long face of building (i.e. angle θ=0°)

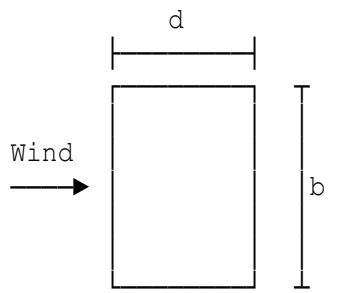

PLAN VIEW

Inwind depth d=20 m
Crosswind width b=60 m

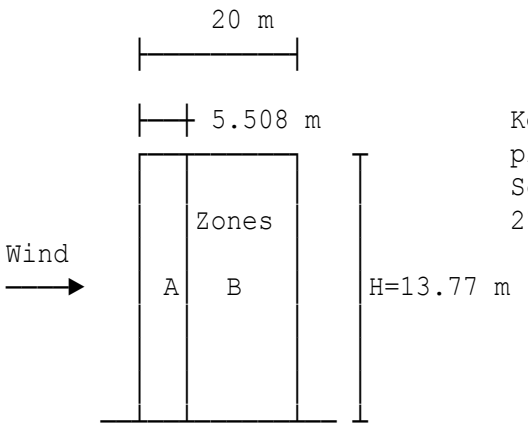

ELEVATION ON SIDE FACE

Key zones for wall pressure data.
Scaling width > d
27.54 m > 20 m

Case 2: Wind on short face of building (i.e. angle θ=90°)

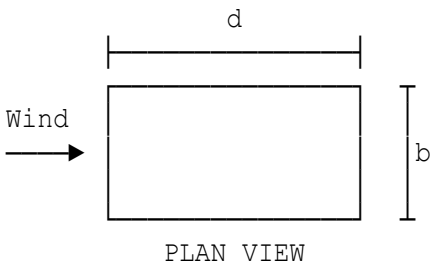

Inwind depth d=60 m
Crosswind width b=20 m

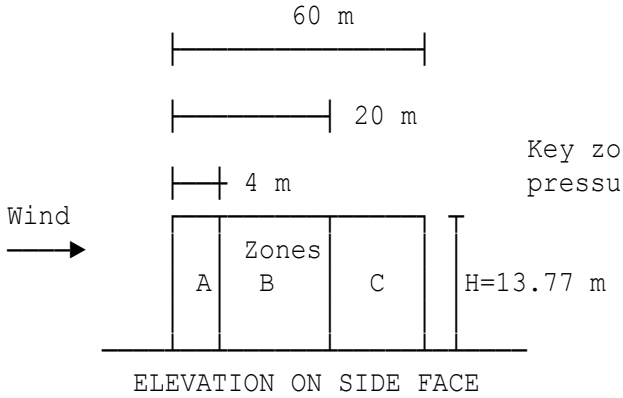

Key zones for wall pressure data.

Wall net pressure Cpi=0.2	**Wind on long face of building**
Windward (front) face	N1LW1=PeLW1-Pi1ww0=0.3756 kN/m²
Leeward (rear) face	N1LW2=PeLW2-Pi1ww0=-0.4149 kN/m²
Isolated Zone A side face	N1LW3=PeLW3-Pi1ww0=-0.9416 kN/m²
Isolated Zone B side face	N1LW4=PeLW4-Pi1ww0=-0.6726 kN/m²

Wall net pressure Cpi=0.2	**Wind on short face of building**
Windward (front) face	N1SW1=PeSW1-Pi1ww90=0.1792 kN/m²
Leeward (rear) face	N1SW2=PeSW2-Pi1ww90=-0.1792 kN/m²
Isolated Zone A side face	N1SW3=PeSW3-Pi1ww90=-0.5018 kN/m²
Isolated Zone B side face	N1SW4=PeSW4-Pi1ww90=-0.3584 kN/m²
Isolated Zone C side face	N1SW5=PeSW5-Pi1ww90=-0.2509 kN/m²

Wall net pressure Cpi=-0.3	**Wind on long face of building**
Windward (front) face	N2LW1=PeLW1-Pi2ww0=0.7119 kN/m²
Leeward (rear) face	N2LW2=PeLW2-Pi2ww0=-0.0786 kN/m²
Isolated Zone A side face	N2LW3=PeLW3-Pi2ww0=-0.6053 kN/m²
Isolated Zone B side face	N2LW4=PeLW4-Pi2ww0=-0.3363 kN/m²

Wall net pressure Cpi=-0.3	**Wind on short face of building**
Windward (front) face	N2SW1=PeSW1-Pi2ww90=0.3584 kN/m²
Leeward (rear) face	N2SW2=PeSW2-Pi2ww90=0 kN/m²
Isolated Zone A side face	N2SW3=PeSW3-Pi2ww90=-0.3226 kN/m²

Isolated Zone B side face	N2SW4=PeSW4-Pi2ww90=-0.1792 kN/m²
Isolated Zone C side face	N2SW5=PeSW5-Pi2ww90=-0.0717 kN/m²

External pressure coefficients Cpe for duopitch roofs

Case 1: Wind angle θ=0°

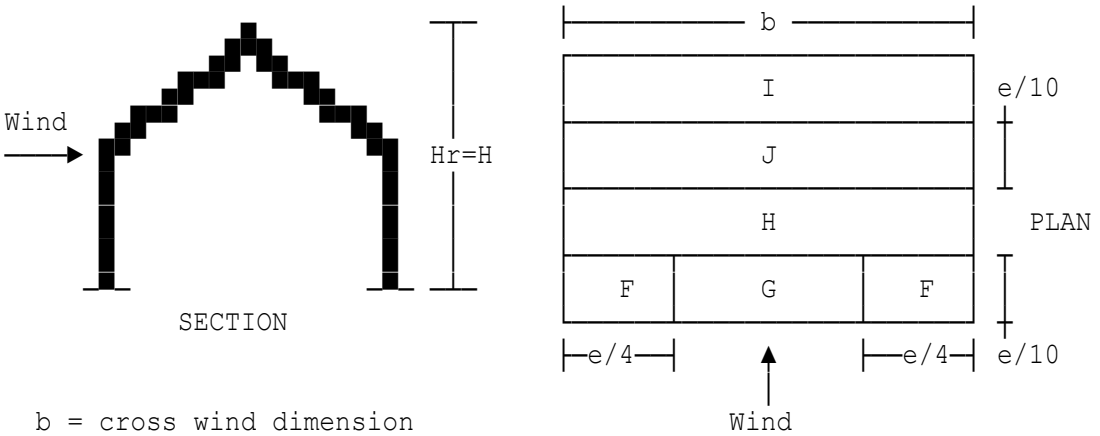

b = cross wind dimension

Roof slope to horizontal	Dalpha=30°

Case 2: Wind angle θ=90°

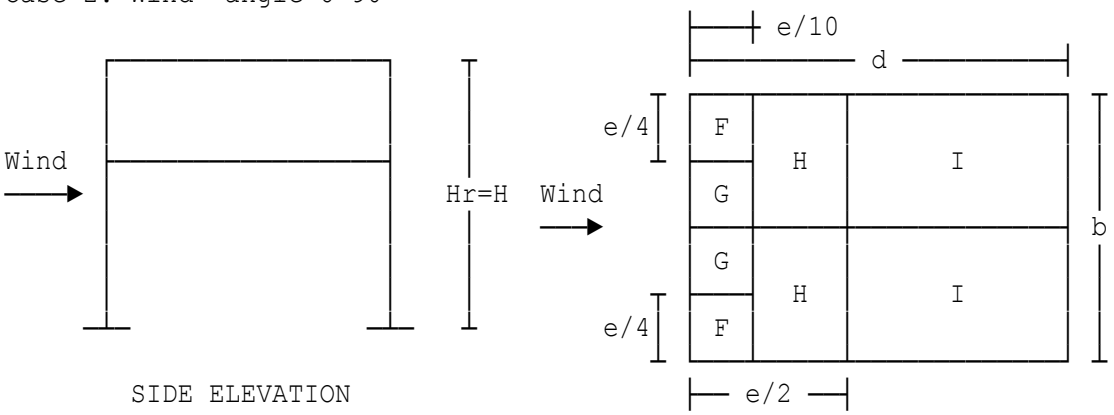

Roof net pressure Cpi=0.2	**Wind θ=0° (long face)**
Roof zone F	N1RF0=PeRF0-PiW1w0=-0.4708 kN/m²
Roof zone G	N1RG0=PeRG0-PiW1w0=-0.4708 kN/m²
Roof zone H	N1RH0=PeRH0-PiW1w0=-0.269 kN/m²
Roof zone J	N1RJ0=PeRJ0-PiW1w0=-0.7398 kN/m²
Roof zone I	N1RI0=PeRI0-PiW1w0=-0.4708 kN/m²
Roof zone F (+Ve Value)	N1RAF0=PRAF0-PiW1w0=0.4035 kN/m²
Roof zone G (+Ve Value)	N1RAG0=PRAG0-PiW1w0=0.2018 kN/m²
Roof zone H (+Ve Value)	N1RAH0=PRAH0-PiW1w0=0.1345 kN/m²
Roof zone J (+Ve Value)	N1RAJ0=PRAJ0-PiW1w0=-0.7398 kN/m²
Roof zone I (+Ve Value)	N1RAI0=PRAI0-PiW1w0=-0.4708 kN/m²

Roof net pressure Cpi=0.2 **Wind θ=90° (short face)**

Roof zone F	N1RF9=PeRF9-PiW1w90=-0.5018 kN/m²
Roof zone G	N1RG9=PeRG9-PiW1w90=-0.4659 kN/m²
Roof zone H	N1RH9=PeRH9-PiW1w90=-0.2867 kN/m²
Roof zone I	N1RI9=PeRI9-PiW1w90=-0.2509 kN/m²
Roof zone F (+Ve Value)	N1RAF9=PRAF9-PiW1w90=0.1075 kN/m²
Roof zone G (+Ve Value)	N1RAG9=PRAG9-PiW1w90=0.0717 kN/m²
Roof zone H (+Ve Value)	N1RAH9=PRAH9-PiW1w90=0.0358 kN/m²
Roof zone I (+Ve Value)	N1RAI9=PRAI9-PiW1w90=0 kN/m²

Roof net pressure Cpi=-0.3 **Wind θ=0° (long face)**

Roof zone F	N2RF0=PeRF0-PiW2w0=-0.1345 kN/m²
Roof zone G	N2RG0=PeRG0-PiW2w0=-0.1345 kN/m²
Roof zone H	N2RH0=PeRH0-PiW2w0=0.0673 kN/m²
Roof zone J	N2RJ0=PeRJ0-PiW2w0=-0.4035 kN/m²
Roof zone I	N2RI0=PeRI0-PiW2w0=-0.1345 kN/m²
Roof zone F (+Ve Value)	N2RAF0=PRAF0-PiW2w0=0.7398 kN/m²
Roof zone G (+Ve Value)	N2RAG0=PRAG0-PiW2w0=0.538 kN/m²
Roof zone H (+Ve Value)	N2RAH0=PRAH0-PiW2w0=0.4708 kN/m²
Roof zone J (+Ve Value)	N2RAJ0=PRAJ0-PiW2w0=-0.4035 kN/m²
Roof zone I (+Ve Value)	N2RAI0=PRAI0-PiW2w0=-0.1345 kN/m²

Roof net pressure Cpi=-0.3 **Wind θ=90° (short face)**

Roof zone F	N2RF9=PeRF9-PiW2w90=-0.3226 kN/m²
Roof zone G	N2RG9=PeRG9-PiW2w90=-0.2867 kN/m²
Roof zone H	N2RH9=PeRH9-PiW2w90=-0.1075 kN/m²
Roof zone I	N2RI9=PeRI9-PiW2w90=-0.0717 kN/m²
Roof zone F (+Ve Value)	N2RAF9=PRAF9-PiW2w90=0.2867 kN/m²
Roof zone G (+Ve Value)	N2RAG9=PRAG9-PiW2w90=0.2509 kN/m²
Roof zone H (+Ve Value)	N2RAH9=PRAH9-PiW2w90=0.215 kN/m²
Roof zone I (+Ve Value)	N2RAI9=PRAI9-PiW2w90=0.1792 kN/m²

Location: Default case 2 Flat roof; topography critical

Obstruction height and upwind spacing

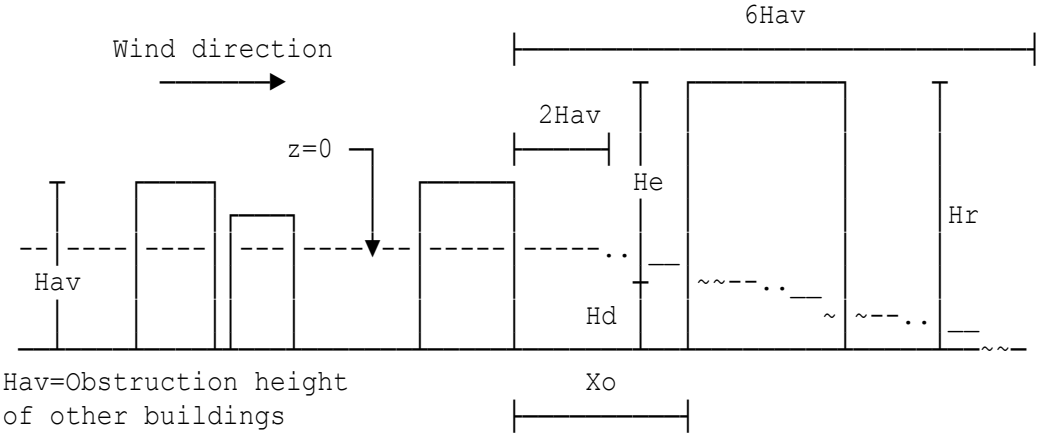

Hav=Obstruction height
of other buildings

Building reference height	Hr=18 m
Displacement height (wind θ=0°)	Hd(0)=0 m
Displacement height (wind θ=90°)	Hd(90)=0 m
Building height	H=18 m

Standard wind loads

Basic wind velocity (Fig. NA.1) Vbmap=22.5 m/s
Site altitude above mean sea level Asite=35 m

Orography is significant - Wind on long face of building

Slope details and site location relative to crest as per Figure NA.2 of NA to BS EN 1991-1-4:2005+A1:2010.

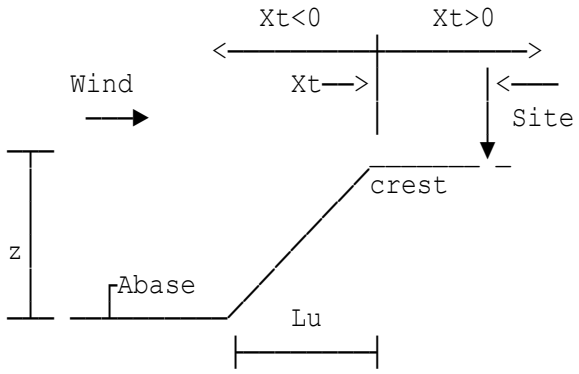

Site altitude is 35 m above mean sea level.

Xt is positive if site is located downwind of crest.

Xt is negative if site is located upwind of crest.

Effective height of the feature Z=10 m

Directional factor (wind θ=0°) Cdi(0)=0.85
Directional factor (wind θ=90°) Cdi(90)=0.85
Seasonal factor Cseason=0.86
Distance upwind to shoreline Dis(0)=2.5 km
Distance upwind to shoreline Dis(90)=2.5 km
Probability factor Cp=1

	Effective height (long face)	**He(0)**	**18 m**
	Effective height (short face)	**He(90)**	**18 m**
	Altitude factor (long face)	**Ca(0)**	**1.035**
DESIGN	**Altitude factor (short face)**	**Ca(90)**	**1.035**
SUMMARY	**Direction factor (long face)**	**Cdi(0)**	**0.85**
	Direction factor (short face)	**Cdi(90)**	**0.85**
	Seasonal factor	**Cseason**	**0.86**
	Probability factor	**Cp**	**1**
	Long face peak velocity pressure	**qp(0)**	**0.6463 kN/m²**
	Short face peak velocity pressure	**qp(90)**	**0.5427 kN/m²**

Peak velocity pressure & pressure coefficients

on walls of rectangular buildings

Height of wall including parapet Hr'=18 m
Wind acting on long face of building (wind θ=0°):
Peak velocity pressure based on height above ground 18 m.
Peak velocity pressure @ eaves qpe(0)=0.6463 kN/m²
Wind acting on short face of building (wind θ=90°):
Peak velocity pressure based on height above ground 18 m.
Peak velocity pressure @ eaves qpe(90)=0.5427 kN/m²

Case 1: Wind on long face of building (i.e. angle θ=0°)

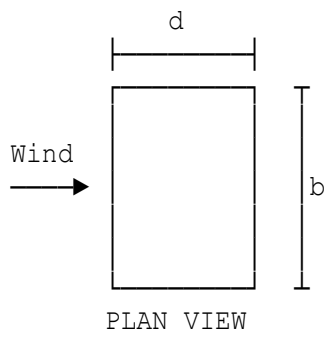

PLAN VIEW

Inwind depth d=40.5 m
Crosswind width b=150 m

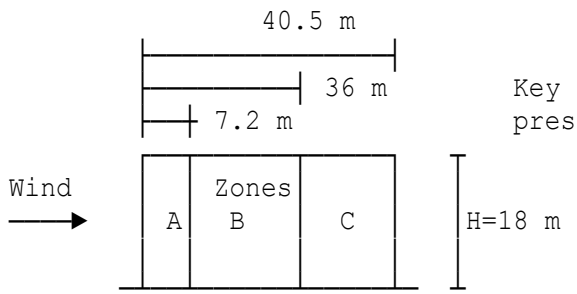

ELEVATION ON SIDE FACE

Key zones for wall pressure data.

Case 2: Wind on short face of building (i.e. angle θ=90°)

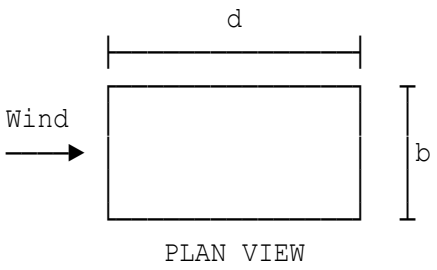

Inwind depth d=150 m
Crosswind width b=40.5 m

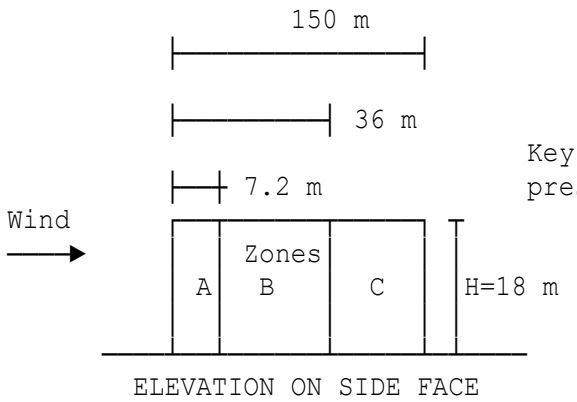

Key zones for wall pressure data.

External pressure coefficients Cpe for flat roofs

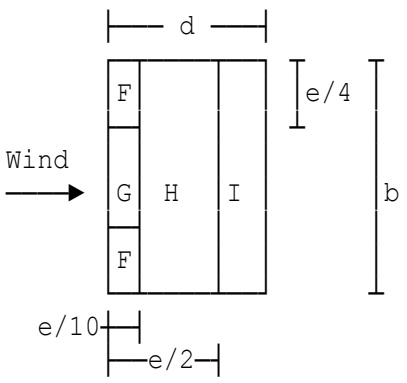

PLAN VIEW

Wind on long face (θ=0°)

Inwind depth d=40.5 m
Crosswind width b=150 m

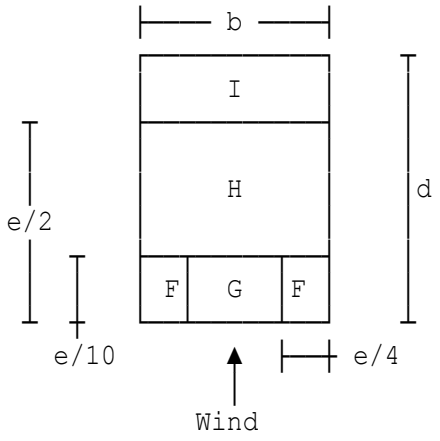

PLAN VIEW

Wind on short face (θ=90°)

Inwind depth d=150 m
Crosswind width b=40.5 m

Location: Default case 3 mono roof; topography critical

Obstruction height and upwind spacing

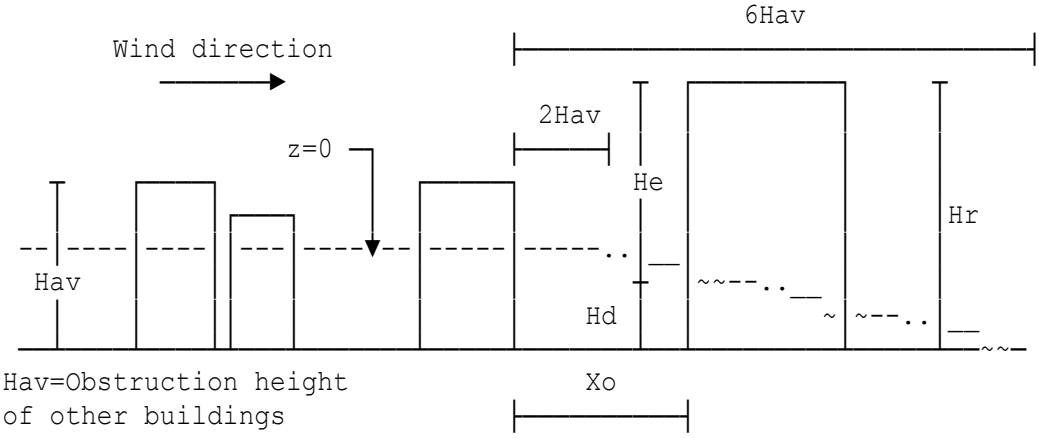

Hav=Obstruction height
of other buildings

Building reference height	Hr=18.5 m
buildings upwind of site	Hav=6.5 m
Upwind spacing of building	Xo=20 m
Displacement height (wind θ=0°)	Hd(0)=6.5 m
Displacement height (wind θ=90°)	Hd(90)=6.5 m
Building height	H=18.5 m

Standard wind loads

Basic wind velocity (Fig. NA.1) Vbmap=24 m/s
Site altitude above mean sea level Asite=30 m

Orography is significant - Wind on long face of building

Slope details and site location relative to crest as per Figure NA.2 of NA to BS EN 1991-1-4:2005+A1:2010.

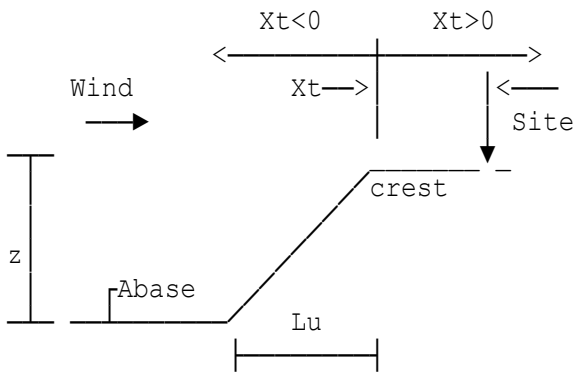

Site altitude is 30 m above mean sea level.

Xt is positive if site is located downwind of crest.

Xt is negative if site is located upwind of crest.

Effective height of the feature Z=5 m

Directional factor (wind θ=0°)	Cdi(0)=0.85
Directional factor (wind θ=90°)	Cdi(90)=0.85
Seasonal factor	Cseason=0.66
Distance upwind to shoreline	Dis(0)=50 km
Distance inside town terrain	Dit(0)=10 km
Distance upwind to shoreline	Dis(90)=50 km
Distance inside town terrain	Dit(90)=10 km
Probability factor	Cp=1

	Effective height (long face)	**He(0)**	**12 m**
	Effective height (short face)	**He(90)**	**12 m**
	Altitude factor (long face)	**Ca(0)**	**1.03**
DESIGN	**Altitude factor (short face)**	**Ca(90)**	**1.03**
SUMMARY	**Direction factor (long face)**	**Cdi(0)**	**0.85**
	Direction factor (short face)	**Cdi(90)**	**0.85**
	Seasonal factor	**Cseason**	**0.66**
	Probability factor	**Cp**	**1**
	Long face peak velocity pressure	**qp(0)**	**0.2726 kN/m²**
	Short face peak velocity pressure	**qp(90)**	**0.239 kN/m²**

Peak velocity pressure & pressure coefficients

on walls of rectangular buildings

Height of wall including parapet Hr'=18.5 m
Wind acting on long face of building (wind θ=0°):
Peak velocity pressure based on height above ground 12 m.
Peak velocity pressure @ eaves qpe(0)=0.2726 kN/m²
Wind acting on short face of building (wind θ=90°):
Peak velocity pressure based on height above ground 12 m.
Peak velocity pressure @ eaves qpe(90)=0.239 kN/m²

Case 1: Wind on long face of building (i.e. angle θ=0°)

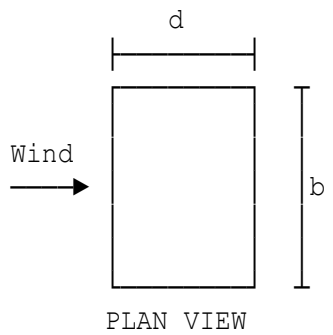

Inwind depth d=20 m
Crosswind width b=40 m

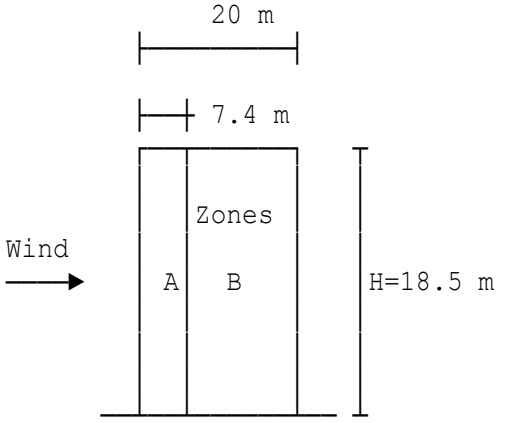

Key zones for wall
pressure data.
Scaling width > d
37 m > 20 m

ELEVATION ON SIDE FACE

Case 2: Wind on short face of building (i.e. angle θ=90°)

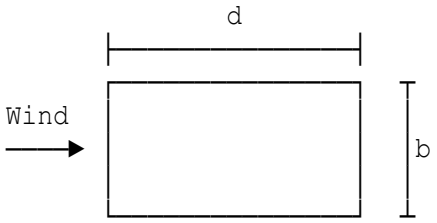

Inwind depth d=40 m
Crosswind width b=20 m

PLAN VIEW

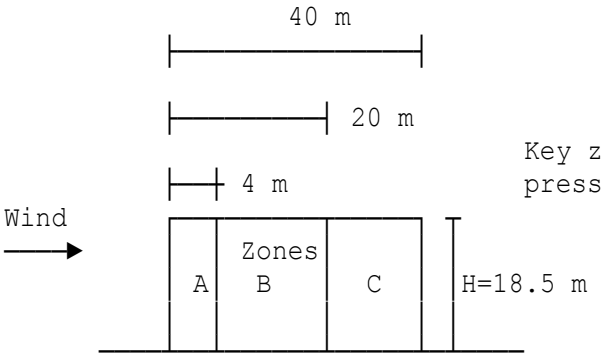

Key zones for wall
pressure data.

ELEVATION ON SIDE FACE

"0.75 times Cpe"

Internal pressure coefficient 1 Cpi(1)=-0.8

Internal pressure coefficient 2 Cpi(2)=0.3

Wall net pressure Cpi=-0.8 **Wind on long face of building**

Windward (front) face N1LW1=PeLW1-Pi1ww0=0.4334 kN/m²
Leeward (rear) face N1LW2=PeLW2-Pi1ww0=0.0872 kN/m²
Isolated Zone A side face N1LW3=PeLW3-Pi1ww0=-0.109 kN/m²
Isolated Zone B side face N1LW4=PeLW4-Pi1ww0=0 kN/m²

Wall net pressure Cpi=-0.8 **Wind on short face of building**

Windward (front) face N1SW1=PeSW1-Pi1ww90=0.3653 kN/m²
Leeward (rear) face N1SW2=PeSW2-Pi1ww90=0.1059 kN/m²
Isolated Zone A side face N1SW3=PeSW3-Pi1ww90=-0.0956 kN/m²
Isolated Zone B side face N1SW4=PeSW4-Pi1ww90=0 kN/m²
Isolated Zone C side face N1SW5=PeSW5-Pi1ww90=0.0717 kN/m²

Wall net pressure Cpi=0.3 **Wind on long face of building**

Windward (front) face N2LW1=PeLW1-Pi2ww0=0.1336 kN/m²
Leeward (rear) face N2LW2=PeLW2-Pi2ww0=-0.2126 kN/m²
Isolated Zone A side face N2LW3=PeLW3-Pi2ww0=-0.4089 kN/m²
Isolated Zone B side face N2LW4=PeLW4-Pi2ww0=-0.2999 kN/m²

Wall net pressure Cpi=0.3 **Wind on short face of building**

Windward (front) face N2SW1=PeSW1-Pi2ww90=0.1024 kN/m²
Leeward (rear) face N2SW2=PeSW2-Pi2ww90=-0.157 kN/m²
Isolated Zone A side face N2SW3=PeSW3-Pi2ww90=-0.3585 kN/m²
Isolated Zone B side face N2SW4=PeSW4-Pi2ww90=-0.2629 kN/m²
Isolated Zone C side face N2SW5=PeSW5-Pi2ww90=-0.1912 kN/m²

Coefficients Cpe for monopitch roofs

Case 1: Wind angle θ=0°

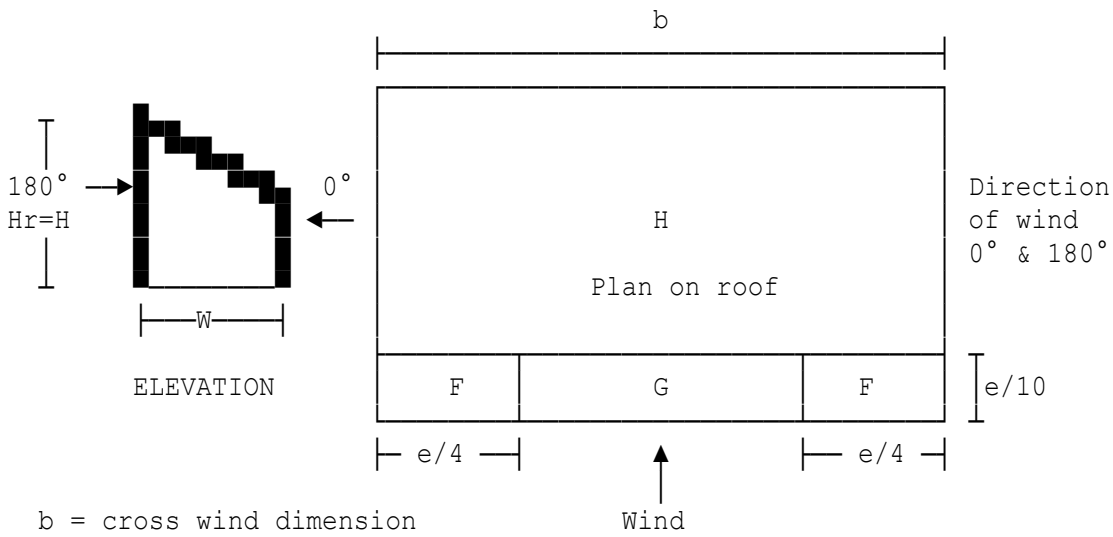

b = cross wind dimension

Pitch of roof (5° to 75°) Malpha=75°

Case 3: Wind angle θ=90°

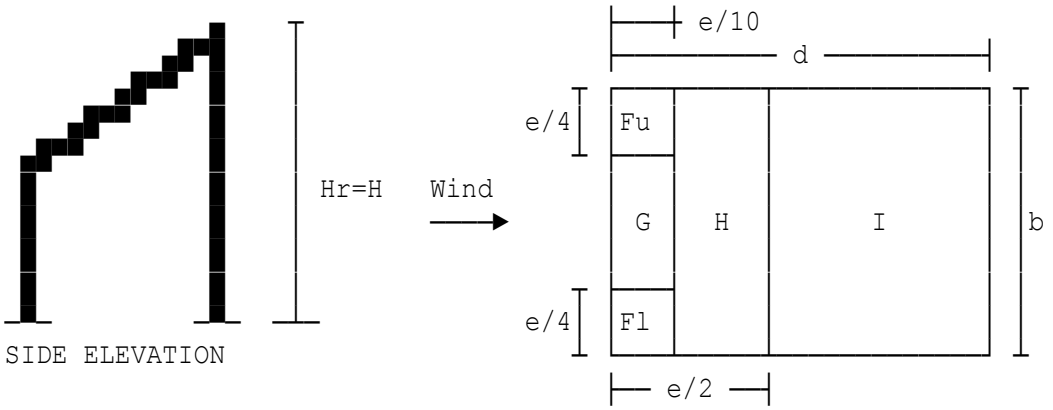

Roof net pressure Cpi=-0.8 Wind θ=0° (long face)

Roof zone F	N1RF0=PeRF0-PiW1w0=0.2181 kN/m²
Roof zone G	N1RG0=PeRG0-PiW1w0=0.2181 kN/m²
Roof zone H	N1RH0=PeRH0-PiW1w0=0.2181 kN/m²
Roof zone F (+Ve Value)	N1RAF0=PRAF0-PiW1w0=0.4362 kN/m²
Roof zone G (+Ve Value)	N1RAG0=PRAG0-PiW1w0=0.4362 kN/m²
Roof zone H (+Ve Value)	N1RAH0=PRAH0-PiW1w0=0.4362 kN/m²

Roof net pressure Cpi=-0.8 Wind θ=90° (short face)

Roof zone Fu	N1Fu9=PuRF9-PiW1w90=-0.0956 kN/m²
Roof zone Fl	N1Fl9=PlRF9-PiW1w90=-0.0956 kN/m²
Roof zone G	N1RG9=PeRG9-PiW1w90=-0.0956 kN/m²
Roof zone H	N1RH9=PeRH9-PiW1w90=0.0956 kN/m²
Roof zone I	N1RI9=PeRI9-PiW1w90=0.1434 kN/m²
Roof zone Fu (+ve value)	N1Rup9=PpRu9-PiW1w90=0.3823 kN/m²
Roof zone Fl (+ve value)	N1Rlp9=PpRl9-PiW1w90=0.3823 kN/m²
Roof zone G (+ve value)	N1RGp9=PpRG9-PiW1w90=0.3823 kN/m²
Roof zone H (+ve value)	N1RHp9=PpRH9-PiW1w90=0.3584 kN/m²
Roof zone I (+ve value)	N1RIp9=PpRI9-PiW1w90=0.3345 kN/m²

Roof net pressure Cpi=-0.8 Wind θ=180°

Roof zone F	N1RF8=PeRF8-PiW1w0=-0.0818 kN/m²
Roof zone G	N1RG8=PeRG8-PiW1w0=0.0273 kN/m²
Roof zone H	N1RH8=PeRH8-PiW1w0=0.0273 kN/m²

Roof net pressure Cpi=0.3 Wind θ=0° (long face)

Roof zone F	N2RF0=PeRF0-PiW2w0=-0.0818 kN/m²
Roof zone G	N2RG0=PeRG0-PiW2w0=-0.0818 kN/m²
Roof zone H	N2RH0=PeRH0-PiW2w0=-0.0818 kN/m²
Roof zone F (+Ve Value)	N2RAF0=PRAF0-PiW2w0=0.1363 kN/m²
Roof zone G (+Ve Value)	N2RAG0=PRAG0-PiW2w0=0.1363 kN/m²
Roof zone H (+Ve Value)	N2RAH0=PRAH0-PiW2w0=0.1363 kN/m²

Roof net pressure Cpi=0.3 **Wind θ=90° (short face)**

Roof zone F upper	N2Fu9=PuRF9-PiW2w90=-0.3584 kN/m²
Roof zone F lower	N2Fl9=PlRF9-PiW2w90=-0.3584 kN/m²
Roof zone G	N2RG9=PeRG9-PiW2w90=-0.3584 kN/m²
Roof zone H	N2RH9=PeRH9-PiW2w90=-0.1673 kN/m²
Roof zone I	N2RI9=PeRI9-PiW2w90=-0.1195 kN/m²
Roof zone Fu (+ve value)	N2Rup9=PpRu9-PiW2w90=0.1195 kN/m²
Roof zone Fl (+ve value)	N2Rlp9=PpRl9-PiW2w90=0.1195 kN/m²
Roof zone G (+ve value)	N2RGp9=PpRG9-PiW2w90=0.1195 kN/m²
Roof zone H (+ve value)	N2RHp9=PpRH9-PiW2w90=0.0956 kN/m²
Roof zone I (+ve value)	N2RIp9=PpRI9-PiW2w90=0.0717 kN/m²

Roof net pressure Cpi=0.3 **Wind θ=180°**

Roof zone F	N2RF8=PeRF8-PiW2w0=-0.3817 kN/m²
Roof zone G	N2RG8=PeRG8-PiW2w0=-0.2726 kN/m²
Roof zone H	N2RH8=PeRH8-PiW2w0=-0.2726 kN/m²

Location: Default case 4 Hipped roof structure

Obstruction height and upwind spacing

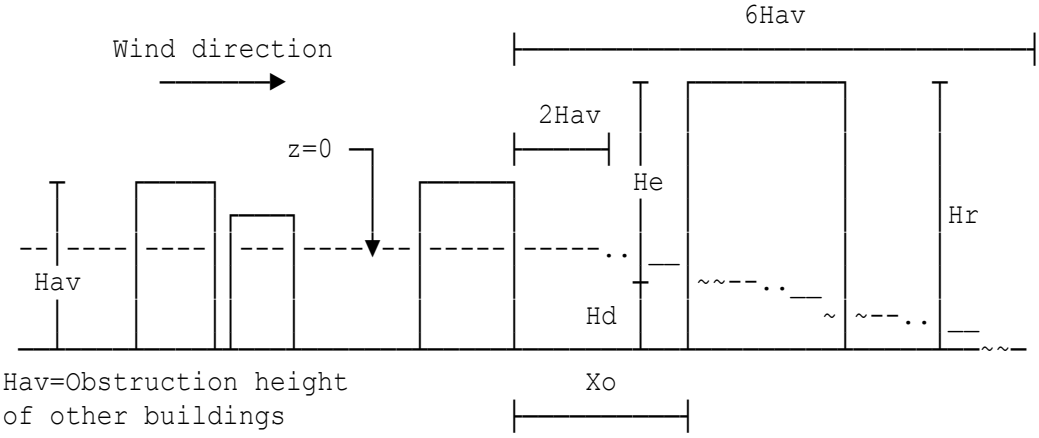

Hav=Obstruction height
of other buildings

Building reference height	Hr=13.8 m
buildings upwind of site	Hav=6.5 m
Upwind spacing of building	Xo=10 m
Displacement height	Hd(0)=5.2 m
Displacement height	Hd(90)=5.2 m
Building height	H=13.8 m

Standard wind loads

Basic wind velocity (Fig. NA.1)	Vbmap=20 m/s
Altitude above mean sea level	Asite=25 m
Directional factor (wind θ=0°)	Cdi(0)=1
Directional factor (wind θ=90°)	Cdi(90)=1
Distance upwind to shoreline	Dis(0)=2.5 km
Distance inside town terrain	Dit(0)=2.5 km
Distance upwind to shoreline	Dis(90)=2.5 km
Distance inside town terrain	Dit(90)=2.5 km
Probability factor	Cp=1

	Effective height (long face)	**He(0)**	**8.6 m**
	Effective height (short face)	**He(90)**	**8.6 m**
	Altitude factor (long face)	**Ca(0)**	**1.025**
DESIGN	**Altitude factor (short face)**	**Ca(90)**	**1.025**
SUMMARY	**Direction factor (long face)**	**Cdi(0)**	**1**
	Direction factor (short face)	**Cdi(90)**	**1**
	Seasonal factor	**Cseason**	**1**
	Probability factor	**Cp**	**1**
	Long face peak velocity pressure	**qp(0)**	**0.548 kN/m²**
	Short face peak velocity pressure	**qp(90)**	**0.548 kN/m²**

Peak velocity pressure & pressure coefficients

on walls of rectangular buildings

Height of wall including parapet Hr'=13.8 m
Wind acting on long face of building (wind θ=0°):
Peak velocity pressure based on height above ground 8.6 m.
Peak velocity pressure @ eaves qpe(0)=0.548 kN/m²
Wind acting on short face of building (wind θ=90°):
Peak velocity pressure based on height above ground 8.6 m.
Peak velocity pressure @ eaves qpe(90)=0.548 kN/m²

Case 1: Wind on long face of building (i.e. angle θ=0°)

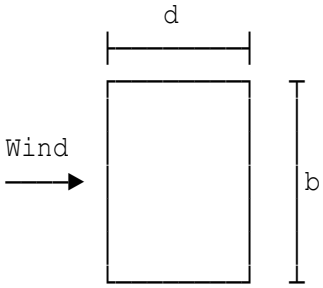

PLAN VIEW

Inwind depth d=30 m
Crosswind width b=60 m

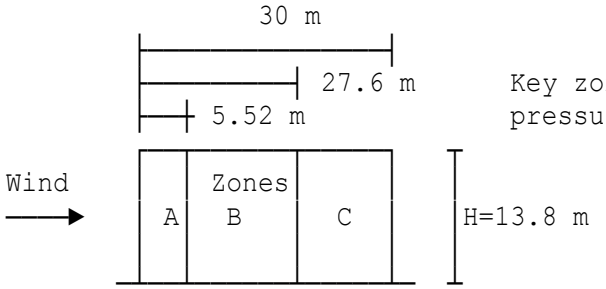

ELEVATION ON SIDE FACE

Key zones for wall pressure data.

Case 2: Wind on short face of building (i.e. angle θ=90°)

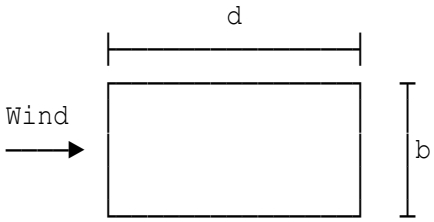

PLAN VIEW

Inwind depth d=60 m
Crosswind width b=30 m

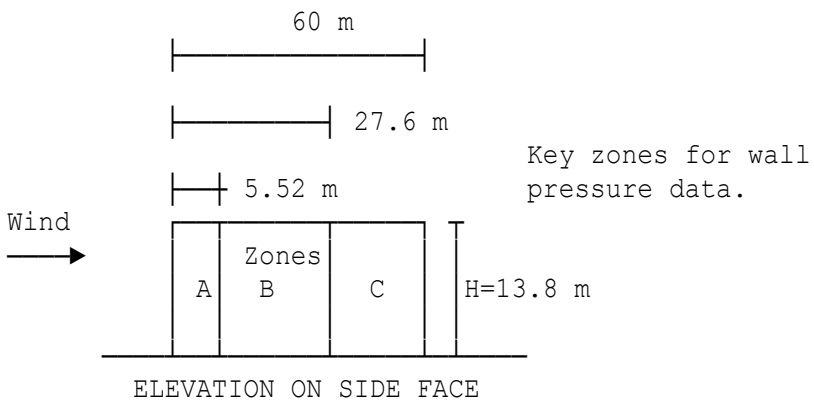

"0.75 times Cpe"

Internal pressure coefficient 1 Cpi(1)=-0.8

Wall net pressure Cpi=-0.8	**Wind on long face of building**
Windward (front) face	N1LW1=PeLW1-Pi1ww0=0.8373 kN/m²
Leeward (rear) face	N1LW2=PeLW2-Pi1ww0=0.2433 kN/m²
Isolated Zone A side face	N1LW3=PeLW3-Pi1ww0=-0.2192 kN/m²
Isolated Zone B side face	N1LW4=PeLW4-Pi1ww0=0 kN/m²
Isolated Zone C side face	N1LW5=PeLW5-Pi1ww0=0.1644 kN/m²
Funnelling Zone A side face	N1LW6=PeLW6-Pi1ww0=-0.4384 kN/m²
Funnelling Zone B side face	N1LW7=PeLW7-Pi1ww0=-0.0548 kN/m²
Funnelling Zone C side face	N1LW8=PeLW8-Pi1ww0=-0.0548 kN/m²

Wall net pressure Cpi=-0.8	**Wind on short face of building**
Windward (front) face	N1SW1=PeSW1-Pi1ww90=0.822 kN/m²
Leeward (rear) face	N1SW2=PeSW2-Pi1ww90=0.274 kN/m²
Isolated Zone A side face	N1SW3=PeSW3-Pi1ww90=-0.2192 kN/m²
Isolated Zone B side face	N1SW4=PeSW4-Pi1ww90=0 kN/m²
Isolated Zone C side face	N1SW5=PeSW5-Pi1ww90=0.1644 kN/m²
Funnelling Zone A side face	N1SW6=PeSW6-Pi1ww90=-0.4384 kN/m²
Funnelling Zone B side face	N1SW7=PeSW7-Pi1ww90=-0.0548 kN/m²
Funnelling Zone C side face	N1SW8=PeSW8-Pi1ww90=-0.0548 kN/m²

External pressure coefficients Cpe for hipped roofs

Case 1: Wind angle θ=0°

Figure 7.9

Wind zones shown are for wind angle θ=0°.

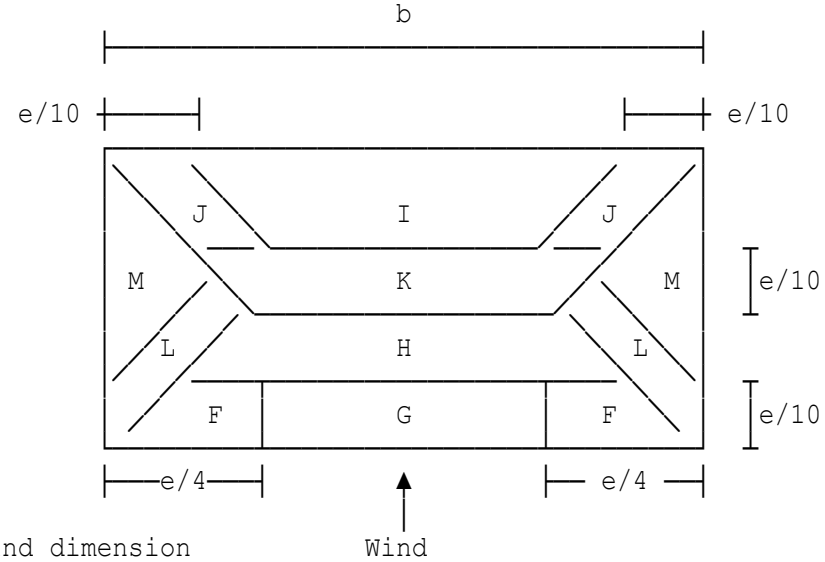

b = cross wind dimension

Main roof slope to horizontal alpha=22.5°

Case 2: Wind angle θ=90°

Figure 7.9

Wind zones shown are for wind angle θ=90°.

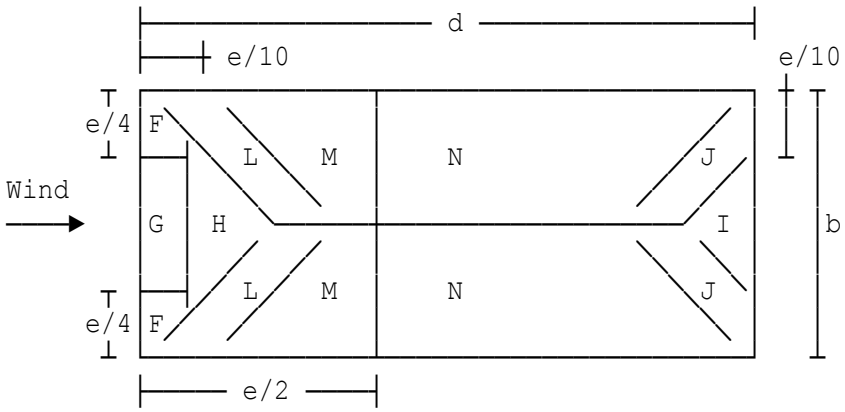

Hipped end roof slope to horizontal Halpha=30°

Roof net pressure Cpi=-0.8 **Wind θ=0° (long face)**

Roof zone F	N1HF0=PeHF0-PiW1w0=-0.0548 kN/m²
Roof zone G	N1HG0=PeHG0-PiW1w0=0.0822 kN/m²
Roof zone H	N1HH0=PeHH0-PiW1w0=0.2466 kN/m²
Roof zone J	N1HJ0=PeHJ0-PiW1w0=-0.3014 kN/m²
Roof zone K	N1HK0=PeHK0-PiW1w0=-0.137 kN/m²
Roof zone I	N1HI0=PeHI0-PiW1w0=0.1096 kN/m²
Roof zone L	N1HL0=PeHL0-PiW1w0=-0.0822 kN/m²
Roof zone M	N1HM0=PeHM0-PiW1w0=0.1096 kN/m²
Roof zone F (+Ve Value)	N1HAF0=PHAF0-PiW1w0=0.7124 kN/m²
Roof zone G (+Ve Value)	N1HAG0=PHAG0-PiW1w0=0.6302 kN/m²
Roof zone H (+Ve Value)	N1HAH0=PHAH0-PiW1w0=0.6028 kN/m²
Roof zone J (+Ve Value)	N1HAJ0=PHAJ0-PiW1w0=-0.3014 kN/m²

Roof zone K (+Ve Value)	N1HAK0=PHAK0-PiW1w0=-0.137 kN/m²
Roof zone I (+Ve Value)	N1HAI0=PHAI0-PiW1w0=0.1096 kN/m²
Roof zone L (+Ve Value)	N1HAL0=PHAL0-PiW1w0=0.4384 kN/m²
Roof zone M (+Ve Value)	N1HAM0=PHAM0-PiW1w0=0.4384 kN/m²

Roof net pressure Cpi=-0.8	**Wind θ=90° (short face)**
Roof zone F	N1HF9=PeHF9-PiW1w90=0.1644 kN/m²
Roof zone G	N1HG9=PeHG9-PiW1w90=0.1644 kN/m²
Roof zone H	N1HH9=PeHH9-PiW1w90=0.3288 kN/m²
Roof zone J	N1HJ9=PeHJ9-PiW1w90=-0.274 kN/m²
Roof zone I	N1HI9=PeHI9-PiW1w90=0.1096 kN/m²
Roof zone L	N1HL9=PeHL9-PiW1w90=-0.1096 kN/m²
Roof zone M	N1HM9=PeHM9-PiW1w90=0.1096 kN/m²
Roof zone N	N1HN9=PeHN9-PiW1w90=0.1644 kN/m²
Roof zone F (+Ve Value)	N1HAF9=PHAF9-PiW1w90=0.8768 kN/m²
Roof zone G (+Ve Value)	N1HAG9=PHAG9-PiW1w90=0.7124 kN/m²
Roof zone H (+Ve Value)	N1HAH9=PHAH9-PiW1w90=0.6576 kN/m²
Roof zone J (+Ve Value)	N1HAJ9=PHAJ9-PiW1w90=-0.274 kN/m²
Roof zone I (+Ve Value)	N1HAI9=PHAI9-PiW1w90=0.1096 kN/m²
Roof zone L (+Ve Value)	N1HAL9=PHAL9-PiW1w90=0.4384 kN/m²
Roof zone M (+Ve Value)	N1HAM9=PHAM9-PiW1w90=0.4384 kN/m²
Roof zone N (+Ve Value)	N1HAN9=PHAN9-PiW1w90=0.4384 kN/m²

Location: Default case 5

Obstruction height and upwind spacing

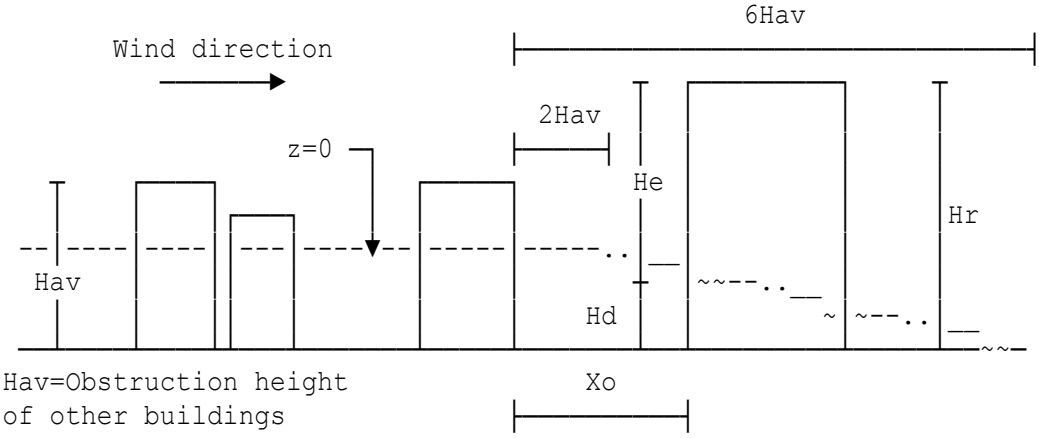

Hav=Obstruction height
of other buildings

Building reference height	Hr=13.8 m
buildings upwind of site	Hav=6.5 m
Upwind spacing of building	Xo=10 m
Displacement height	Hd(0)=5.2 m
Displacement height	Hd(90)=5.2 m
Building height	H=13.8 m

Standard wind loads

Basic wind velocity (Fig. NA.1)	Vbmap=20 m/s
Altitude above mean sea level	Asite=25 m
Directional factor (wind θ=0°)	Cdi(0)=1
Directional factor (wind θ=90°)	Cdi(90)=1
Distance upwind to shoreline	Dis(0)=2.5 km
Distance inside town terrain	Dit(0)=2.5 km
Distance upwind to shoreline	Dis(90)=2.5 km
Distance inside town terrain	Dit(90)=2.5 km
Probability factor	Cp=1

	Effective height (long face)	**He(0)**	**8.6 m**
	Effective height (short face)	**He(90)**	**8.6 m**
	Altitude factor (long face)	**Ca(0)**	**1.025**
DESIGN	**Altitude factor (short face)**	**Ca(90)**	**1.025**
SUMMARY	**Direction factor (long face)**	**Cdi(0)**	**1**
	Direction factor (short face)	**Cdi(90)**	**1**
	Seasonal factor	**Cseason**	**1**
	Probability factor	**Cp**	**1**
	Long face peak velocity pressure	**qp(0)**	**0.548 kN/m²**
	Short face peak velocity pressure	**qp(90)**	**0.548 kN/m²**

Peak velocity pressure & pressure coefficients

on walls of rectangular buildings

Height of wall including parapet Hr'=13.8 m
Wind acting on long face of building (wind θ=0°):
Peak velocity pressure based on height above ground 8.6 m.
Peak velocity pressure @ eaves qpe(0)=0.548 kN/m²
Wind acting on short face of building (wind θ=90°):
Peak velocity pressure based on height above ground 8.6 m.
Peak velocity pressure @ eaves qpe(90)=0.548 kN/m²

Case 1: Wind on long face of building (i.e. angle θ=0°)

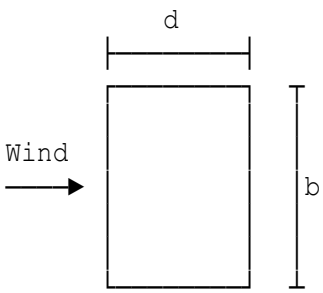

PLAN VIEW

Inwind depth d=30 m
Crosswind width b=60 m

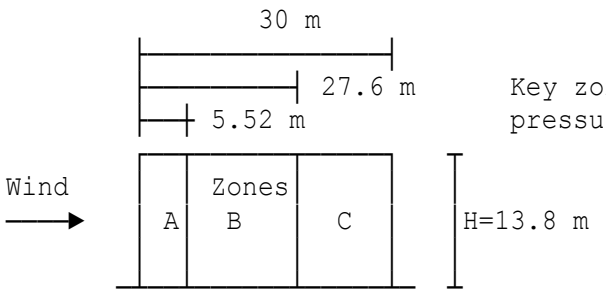

ELEVATION ON SIDE FACE

Key zones for wall pressure data.

Case 2: Wind on short face of building (i.e. angle θ=90°)

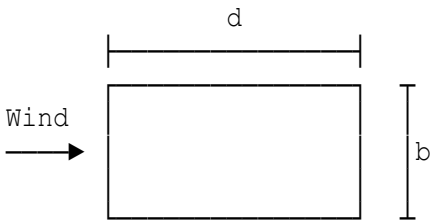

PLAN VIEW

Inwind depth d=60 m
Crosswind width b=30 m

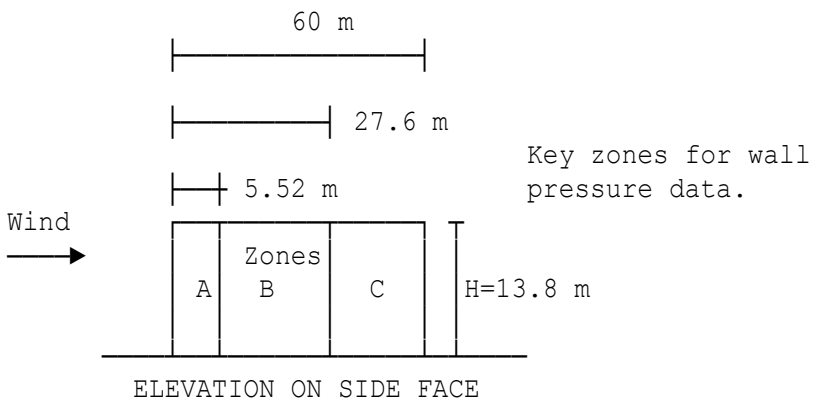

Internal pressure coefficient 1 Cpi(1)=-0.8

External pressure coefficients Cpe for hipped roofs

Case 1: Wind angle θ=0°

Figure 7.9

Wind zones shown are for wind angle θ=0°.

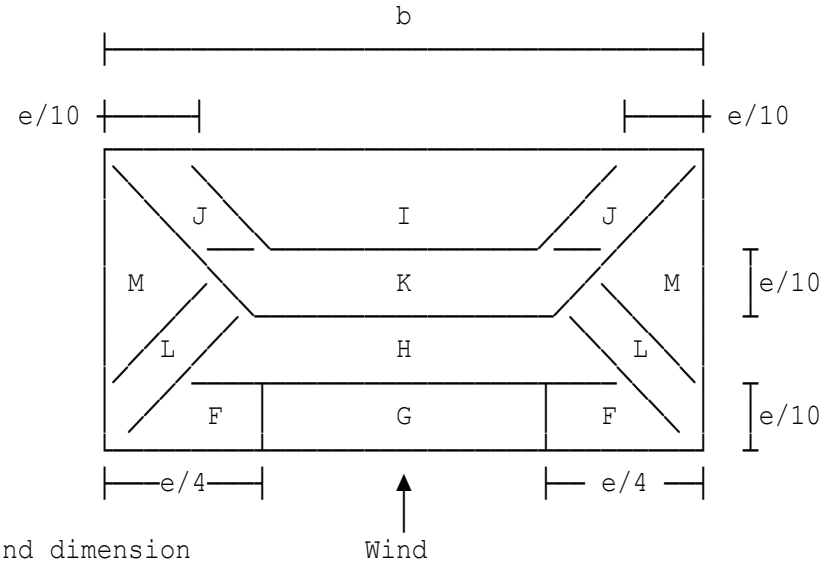

b = cross wind dimension

Main roof slope to horizontal alpha=22.5°

Case 2: Wind angle θ=90°

Figure 7.9

Wind zones shown are for wind angle θ=90°.

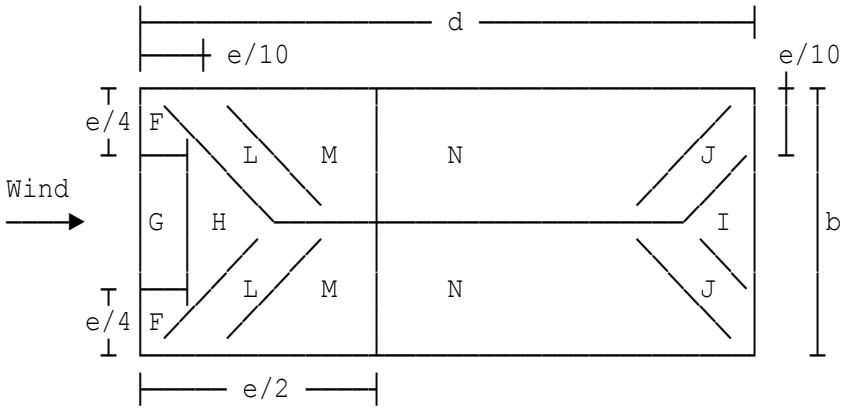

Hipped end roof slope to horizontal Halpha=30°

Location: Default case 6

Obstruction height and upwind spacing

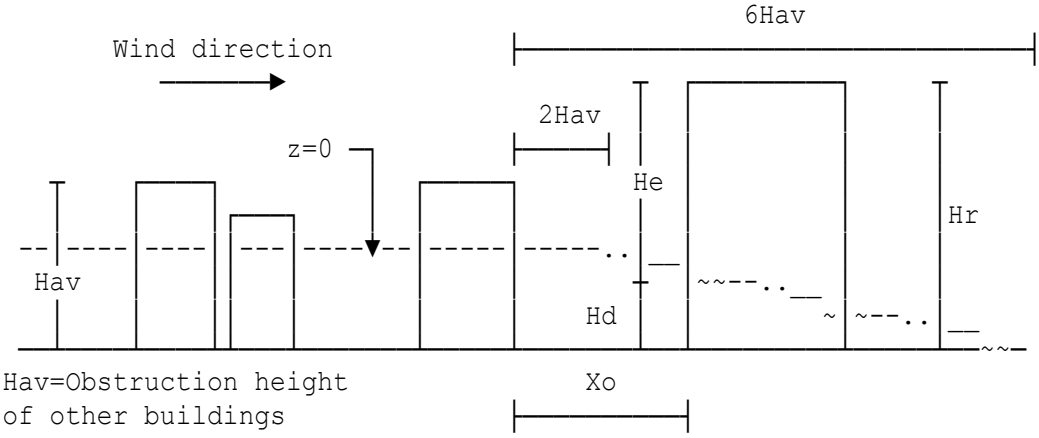

Hav=Obstruction height
of other buildings

Building reference height	Hr=10 m
buildings upwind of site	Hav=4 m
Upwind spacing of building	Xo=10 m
Displacement height (wind θ=0°)	Hd(0)=2.8 m
Displacement height (wind θ=90°)	Hd(90)=2.8 m
Building height	H=10 m

Standard wind loads

Basic wind velocity (Fig. NA.1)	Vbmap=21 m/s
Site altitude above mean sea level	Asite=25 m

Orography is significant - Wind on long face of building

Slope details and site location relative to crest as per Figure NA.2 of NA to BS EN 1991-1-4:2005+A1:2010.

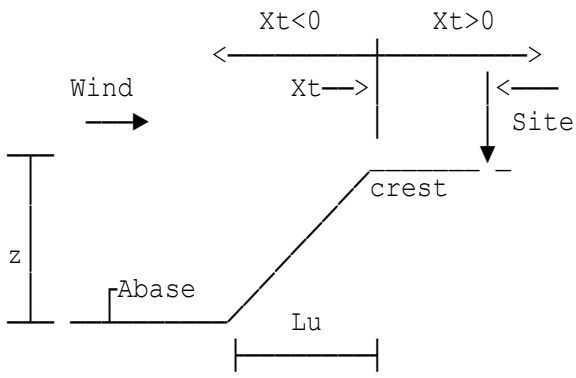

Site altitude is 25 m above mean sea level.

Xt is positive if site is located downwind of crest.

Xt is negative if site is located upwind of crest.

Effective height of the feature	Z=5 m
base of orography	Abase=20 m

Directional factor (wind θ=0°)	Cdi(0)=1
Directional factor (wind θ=90°)	Cdi(90)=1
Distance upwind to shoreline	Dis(0)=5 km
Distance inside town terrain	Dit(0)=5 km
Distance upwind to shoreline	Dis(90)=5 km
Distance inside town terrain	Dit(90)=5 km
Probability factor	Cp=1

	Effective height (long face)	**He(0)**	**7.2 m**
	Effective height (short face)	**He(90)**	**7.2 m**
	Altitude factor (long face)	**Ca(0)**	**1.025**
DESIGN	**Altitude factor (short face)**	**Ca(90)**	**1.025**
SUMMARY	**Direction factor (long face)**	**Cdi(0)**	**1**
	Direction factor (short face)	**Cdi(90)**	**1**
	Seasonal factor	**Cseason**	**1**
	Probability factor	**Cp**	**1**
	Long face peak velocity pressure	**qp(0)**	**0.5679 kN/m²**
	Short face peak velocity pressure	**qp(90)**	**0.5226 kN/m²**

Peak velocity pressure & pressure coefficients

on walls of rectangular buildings

Height of wall including parapet Hr'=10 m
Wind acting on long face of building (wind θ=0°):
Peak velocity pressure based on height above ground 7.2 m.
Peak velocity pressure @ eaves qpe(0)=0.5679 kN/m²
Wind acting on short face of building (wind θ=90°):
Peak velocity pressure based on height above ground 7.2 m.
Peak velocity pressure @ eaves qpe(90)=0.5226 kN/m²

Case 1: Wind on long face of building (i.e. angle θ=0°)

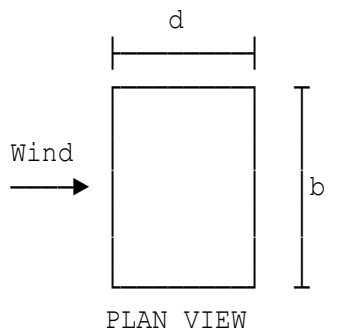

Inwind depth d=30 m
Crosswind width b=50 m

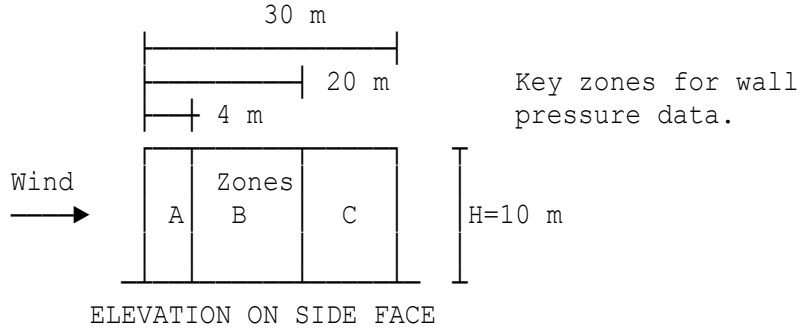

Case 2: Wind on short face of building (i.e. angle θ=90°)

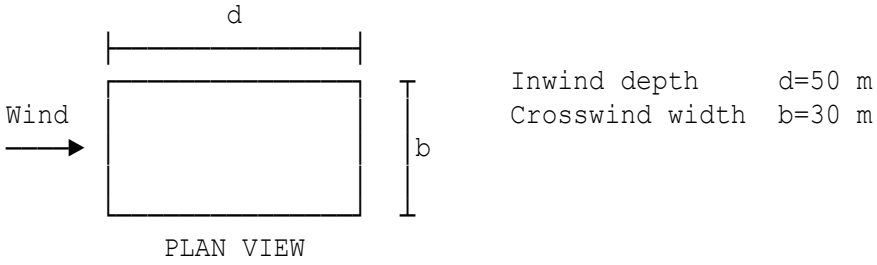

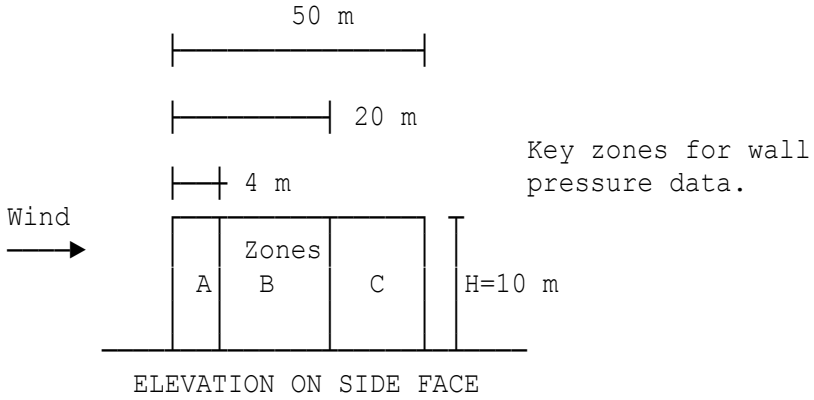

Wall net pressure Cpi=0.2 **Wind on long face of building**

Windward (front) face	N1LW1=PeLW1-Pi1ww0=0.2903 kN/m²
Leeward (rear) face	N1LW2=PeLW2-Pi1ww0=-0.2966 kN/m²
Isolated Zone A side face	N1LW3=PeLW3-Pi1ww0=-0.7951 kN/m²
Isolated Zone B side face	N1LW4=PeLW4-Pi1ww0=-0.5679 kN/m²
Isolated Zone C side face	N1LW5=PeLW5-Pi1ww0=-0.3975 kN/m²

Wall net pressure Cpi=0.2 **Wind on short face of building**

Windward (front) face	N1SW1=PeSW1-Pi1ww90=0.2613 kN/m²
Leeward (rear) face	N1SW2=PeSW2-Pi1ww90=-0.2613 kN/m²
Isolated Zone A side face	N1SW3=PeSW3-Pi1ww90=-0.7316 kN/m²
Isolated Zone B side face	N1SW4=PeSW4-Pi1ww90=-0.5226 kN/m²
Isolated Zone C side face	N1SW5=PeSW5-Pi1ww90=-0.3658 kN/m²

Wall net pressure Cpi=-0.3 **Wind on long face of building**

Windward (front) face	N2LW1=PeLW1-Pi2ww0=0.5742 kN/m²
Leeward (rear) face	N2LW2=PeLW2-Pi2ww0=-0.0126 kN/m²
Isolated Zone A side face	N2LW3=PeLW3-Pi2ww0=-0.5111 kN/m²
Isolated Zone B side face	N2LW4=PeLW4-Pi2ww0=-0.284 kN/m²
Isolated Zone C side face	N2LW5=PeLW5-Pi2ww0=-0.1136 kN/m²

Wall net pressure Cpi=-0.3 **Wind on short face of building**

Windward (front) face	N2SW1=PeSW1-Pi2ww90=0.5226 kN/m²
Leeward (rear) face	N2SW2=PeSW2-Pi2ww90=0 kN/m²
Isolated Zone A side face	N2SW3=PeSW3-Pi2ww90=-0.4703 kN/m²
Isolated Zone B side face	N2SW4=PeSW4-Pi2ww90=-0.2613 kN/m²
Isolated Zone C side face	N2SW5=PeSW5-Pi2ww90=-0.1045 kN/m²

External pressure coefficients Cpe for flat roofs

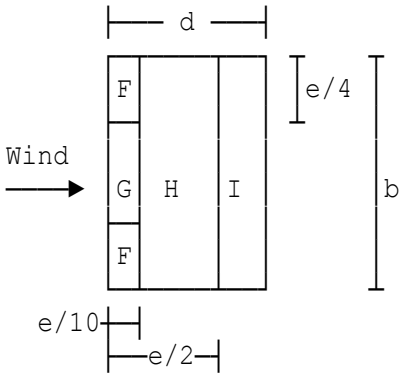

PLAN VIEW

Wind on long face (θ=0°)

Inwind depth d=30 m
Crosswind width b=50 m

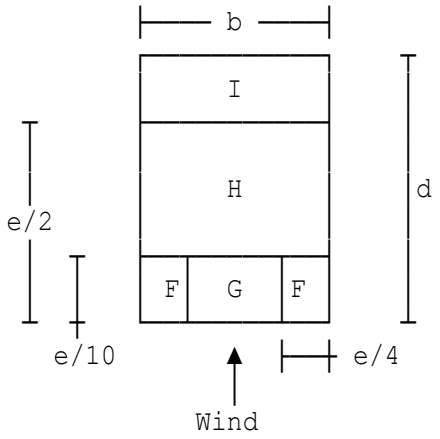

PLAN VIEW

Wind on short face (θ=90°)

Inwind depth d=50 m
Crosswind width b=30 m

Roof net pressure Cpi=0.2 **Wind θ=0° (long face)**

Roof zone F N1RF0=PeRF0-PiW1w0=-1.249 kN/m²
Roof zone G N1RG0=PeRG0-PiW1w0=-0.9087 kN/m²
Roof zone H N1RH0=PeRH0-PiW1w0=-0.5111 kN/m²
Roof zone I 1 N1RI10=PeRI10-PiW1w0=0 kN/m²
Roof zone I 2 N1RI20=PeRI20-PiW1w0=-0.2272 kN/m²

Roof net pressure Cpi=0.2 **Wind θ=90° (short face)**

Roof zone F N1RF9=PeRF9-PiW1w90=-1.15 kN/m²
Roof zone G N1RG9=PeRG9-PiW1w90=-0.8361 kN/m²
Roof zone H N1RH9=PeRH9-PiW1w90=-0.4703 kN/m²
Roof zone I 1 N1RI19=PeRI19-PiW1w90=0 kN/m²
Roof zone I 2 N1RI29=PeRI29-PiW1w90=-0.209 kN/m²

Roof net pressure Cpi=-0.3 **Wind θ=0° (long face)**

Roof zone F N2RF0=PeRF0-PiW2w0=-0.9655 kN/m²
Roof zone G N2RG0=PeRG0-PiW2w0=-0.6247 kN/m²
Roof zone H N2RH0=PeRH0-PiW2w0=-0.2272 kN/m²
Roof zone I 1 N2RI10=PeRI10-PiW2w0=0.284 kN/m²
Roof zone I 2 N2RI20=PeRI20-PiW2w0=0.0568 kN/m²

Roof net pressure Cpi=-0.3 **Wind θ=90° (short face)**

Roof zone F N2RF9=PeRF9-PiW2w90=-0.8884 kN/m²
Roof zone G N2RG9=PeRG9-PiW2w90=-0.5748 kN/m²
Roof zone H N2RH9=PeRH9-PiW2w90=-0.209 kN/m²
Roof zone I 1 N2RI19=PeRI19-PiW2w90=0.2613 kN/m²
Roof zone I 2 N2RI29=PeRI29-PiW2w90=0.0523 kN/m²

Location: Default case 7 (free-standing monopitch roof)

Obstruction height and upwind spacing

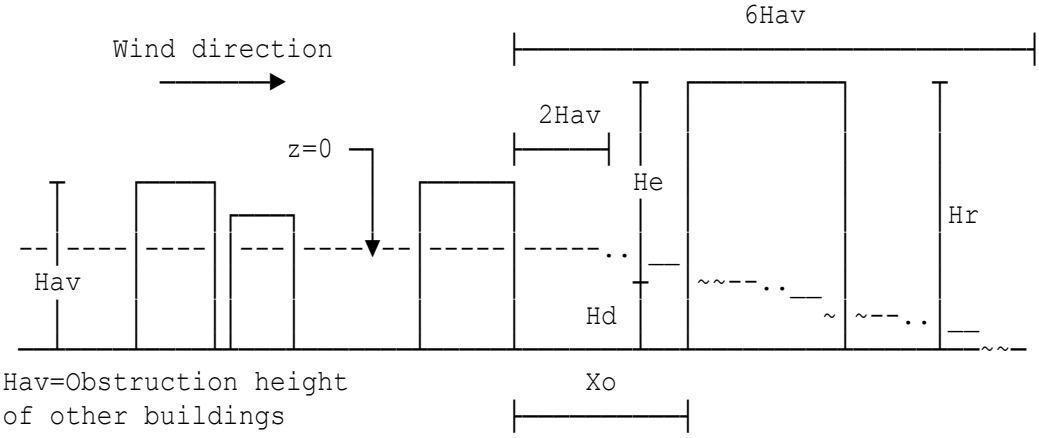

Hav=Obstruction height
of other buildings

Building reference height	Hr=13.77 m
buildings upwind of site	Hav=6.5 m
Upwind spacing of building	Xo=20 m
Displacement height	Hd=3.8 m
Building height	H=13.77 m

Standard wind loads

Basic wind velocity (Fig. NA.1)	Vbmap=21 m/s
Altitude above mean sea level	Asite=25 m
Directional factor	Cdi=1
Distance upwind to shoreline	Dist=2.5 km
Distance inside town terrain	Dit=2 km
Probability factor	Cp=1

	Effective height	**He**	**9.97 m**
DESIGN	**Altitude factor**	**Ca**	**1.025**
SUMMARY	**Direction factor**	**Cdi**	**1**
	Seasonal factor	**Cseason**	**1**
	Probability factor	**Cp**	**1**
	Peak velocity pressure	**qp**	**0.6512 kN/m²**

Net pressure coefficients Cpnet for free-standing monopitch roofs

in accordance with BS EN 1991-1-4:2005+A1:2010 - Table 7.6

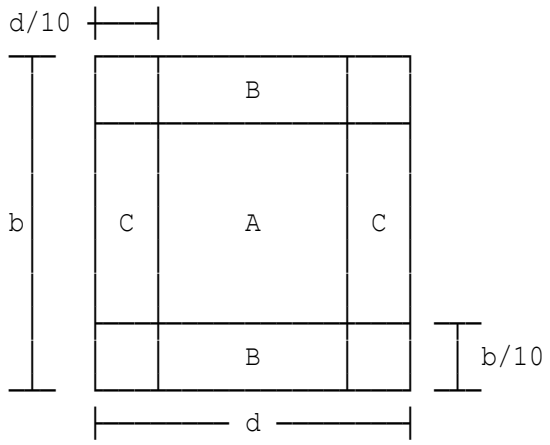

Table 7.6 takes account of the combined wind effect on both upper & lower surfaces of the canopy for all wind directions.

Pitch of roof (0° to 30°) alpha2=25°

Net downward roof pressure (i.e. normal to the roof)

Local net pressure for zone A CplocA=qp*ClocAp=1.302 kN/m²
Local net pressure for zone B CplocB=qp*ClocBp=2.019 kN/m²
Local net pressure for zone C CplocC=qp*ClocCp=1.498 kN/m²

Net upward roof pressure (i.e. normal to the roof)

Local net pressure for zone A CplocA=qp*ClocAn=-1.354 kN/m²
Local net pressure for zone B CplocB=qp*ClocBn=-1.667 kN/m²
Local net pressure for zone C CplocC=qp*ClocCn=-1.667 kN/m²

Net pressure on fascias and gables

In addition to pressure normal to the canopy, there will be horizontal loads on the canopy due to the wind pressure on any fascia at the eaves or any gable ends. The pressure for the windward and leeward faces could be taken as follows:

Net pressure (windward face) Cpwin=qp*1.3=0.8466 kN/m²
Net pressure (leeward face) Cplee=qp*0.6=0.3907 kN/m²

Location: Default case 8 (free-standing monopitch roof)

Obstruction height and upwind spacing

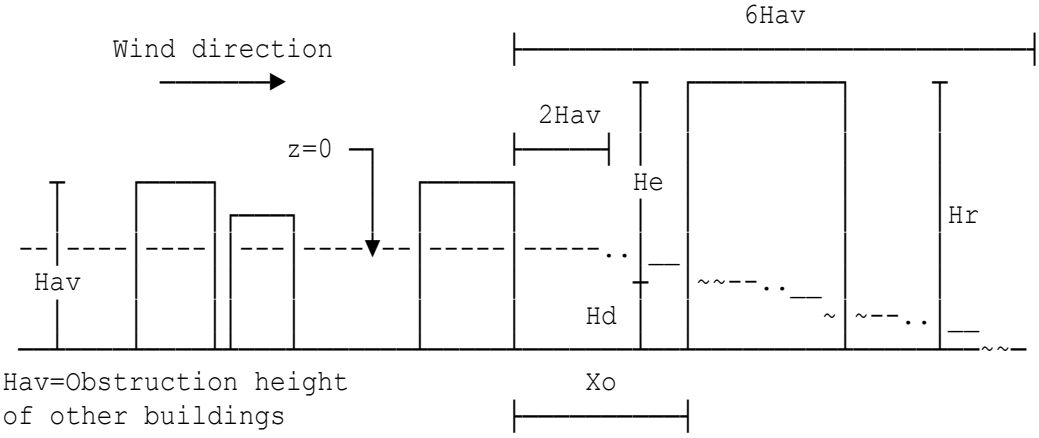

Hav=Obstruction height
of other buildings

Building reference height	Hr=13.77 m
buildings upwind of site	Hav=6.5 m
Upwind spacing of building	Xo=20 m
Displacement height	Hd=3.8 m
Building height	H=13.77 m

Standard wind loads

Basic wind velocity (Fig. NA.1)	Vbmap=21 m/s
Altitude above mean sea level	Asite=25 m
Directional factor	Cdi=1
Distance upwind to shoreline	Dist=2.5 km
Distance inside town terrain	Dit=2 km
Probability factor	Cp=1

	Effective height	**He**	**9.97 m**
DESIGN	**Altitude factor**	**Ca**	**1.025**
SUMMARY	**Direction factor**	**Cdi**	**1**
	Seasonal factor	**Cseason**	**1**
	Probability factor	**Cp**	**1**
	Peak velocity pressure	**qp**	**0.6512 kN/m²**

Net pressure coefficients Cpnet for free-standing monopitch roofs

in accordance with BS EN 1991-1-4:2005+A1:2010 - Table 7.6

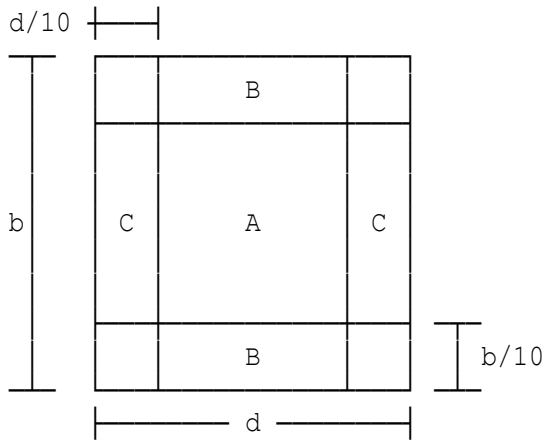

Table 7.6 takes account of the combined wind effect on both upper & lower surfaces of the canopy for all wind directions.

Pitch of roof (0° to 30°) alpha2=30°

Net downward roof pressure (i.e. normal to the roof)

Local net pressure for zone A CplocA=qp*ClocAp=1.433 kN/m²
Local net pressure for zone B CplocB=qp*ClocBp=2.084 kN/m²
Local net pressure for zone C CplocC=qp*ClocCp=1.563 kN/m²

Net upward roof pressure (i.e. normal to the roof)

Local net pressure for zone A CplocA=qp*ClocAn=-0.7293 kN/m²
Local net pressure for zone B CplocB=qp*ClocBn=-1.042 kN/m²
Local net pressure for zone C CplocC=qp*ClocCn=-1.198 kN/m²

Net pressure on fascias and gables

In addition to pressure normal to the canopy, there will be horizontal loads on the canopy due to the wind pressure on any fascia at the eaves or any gable ends. The pressure for the windward and leeward faces could be taken as follows:

Net pressure (windward face) Cpwin=qp*1.3=0.8466 kN/m²
Net pressure (leeward face) Cplee=qp*0.6=0.3907 kN/m²

Location: Default case 9 (free-standing duopitch roof)

Obstruction height and upwind spacing

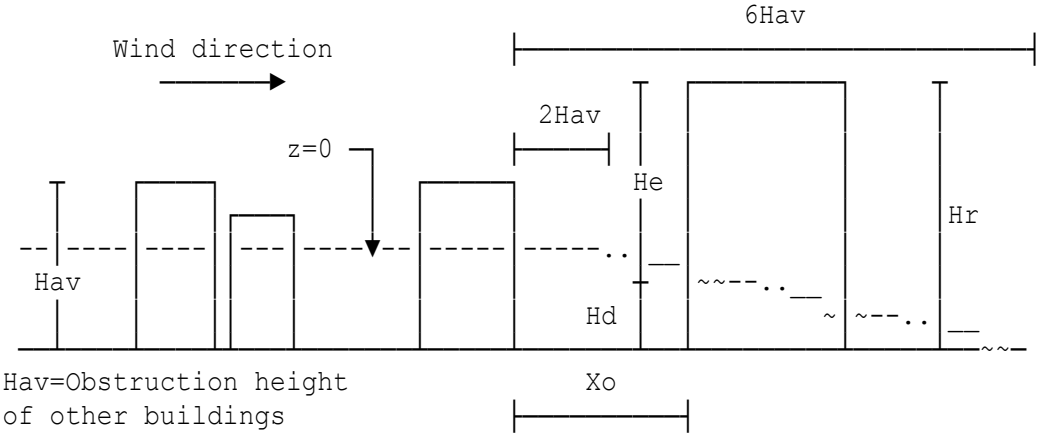

Hav=Obstruction height
of other buildings

Building reference height	Hr=13.77 m
buildings upwind of site	Hav=6.5 m
Upwind spacing of building	Xo=20 m
Displacement height	Hd=3.8 m
Building height	H=13.77 m

Standard wind loads

Basic wind velocity (Fig. NA.1)	Vbmap=21 m/s
Altitude above mean sea level	Asite=25 m
Directional factor	Cdi=1
Distance upwind to shoreline	Dist=2.5 km
Distance inside town terrain	Dit=2 km
Probability factor	Cp=1

	Effective height	**He**	**9.97 m**
DESIGN	**Altitude factor**	**Ca**	**1.025**
SUMMARY	**Direction factor**	**Cdi**	**1**
	Seasonal factor	**Cseason**	**1**
	Probability factor	**Cp**	**1**
	Peak velocity pressure	**qp**	**0.6512 kN/m²**

Net pressure coefficients Cpnet for free-standing duopitch roofs

in accordance with BS EN 1991-1-4:2005+A1:2010 - Table 7.7

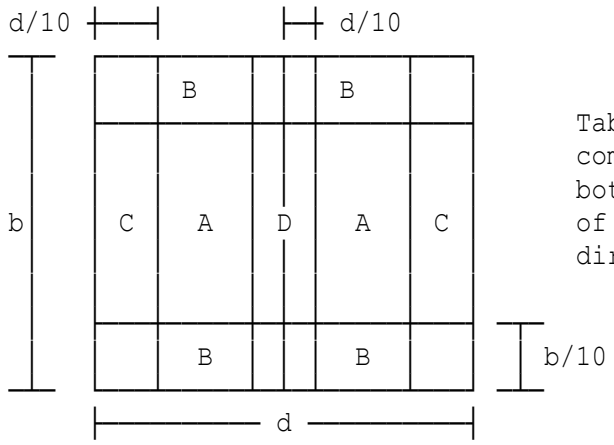

Table 7.7 takes account of the combined effect of the wind on both upper and lower surfaces of the canopy for all wind directions.

Pitch of roof (-20° to 30°) alpha3=5°

Net downward roof pressure (i.e. normal to the roof)

Local net pressure for zone A CplocA=qp*ClocAp=0.3907 kN/m²
Local net pressure for zone B CplocB=qp*ClocBp=1.172 kN/m²
Local net pressure for zone C CplocC=qp*ClocCp=0.8466 kN/m²
Local net pressure for zone D CplocD=qp*ClocDp=0.2605 kN/m²

Net upward roof pressure (i.e. normal to the roof)

Local net pressure for zone A CplocA=qp*ClocAn=-0.3126 kN/m²
Local net pressure for zone B CplocB=qp*ClocBn=-0.7293 kN/m²
Local net pressure for zone C CplocC=qp*ClocCn=-0.7293 kN/m²
Local net pressure for zone D CplocD=qp*ClocDn=-0.573 kN/m²

Net pressure on fascias and gables

In addition to pressure normal to the canopy, there will be horizontal loads on the canopy due to the wind pressure on any fascia at the eaves or any gable ends. The pressure for the windward and leeward faces could be taken as follows:

Net pressure (winward face) Cpwin=qp*1.3=0.8466 kN/m²
Net pressure (leeward face) Cplee=qp*0.6=0.3907 kN/m²

Location: Default case 10 (free-standing duopitch roof)

Obstruction height and upwind spacing

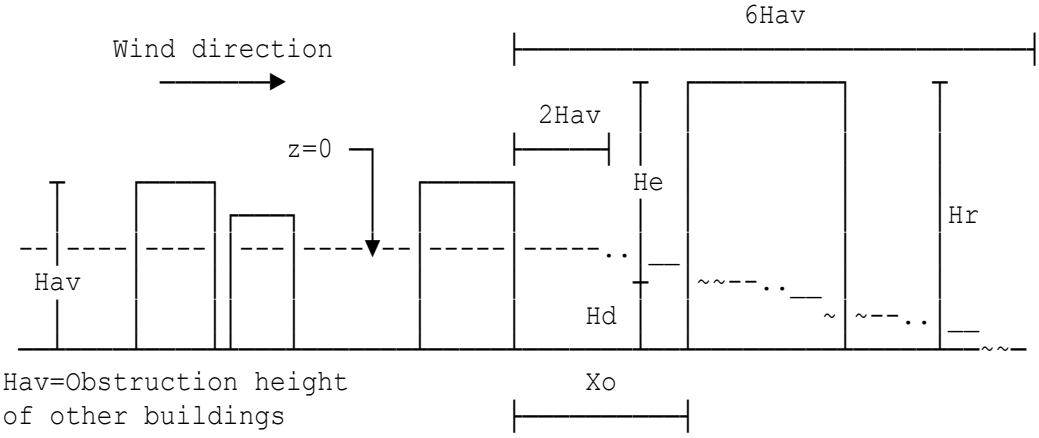

Hav=Obstruction height
of other buildings

Building reference height	Hr=13.77 m
buildings upwind of site	Hav=6.5 m
Upwind spacing of building	Xo=20 m
Displacement height	Hd=3.8 m
Building height	H=13.77 m

Standard wind loads

Basic wind velocity (Fig. NA.1)	Vbmap=21 m/s
Altitude above mean sea level	Asite=25 m
Directional factor	Cdi=1
Distance upwind to shoreline	Dist=2.5 km
Distance inside town terrain	Dit=2.5 km
Probability factor	Cp=1

	Effective height	**He**	**9.97 m**
DESIGN	**Altitude factor**	**Ca**	**1.025**
SUMMARY	**Direction factor**	**Cdi**	**1**
	Seasonal factor	**Cseason**	**1**
	Probability factor	**Cp**	**1**
	Peak velocity pressure	**qp**	**0.6416 kN/m²**

Net pressure coefficients Cpnet for free-standing duopitch roofs

in accordance with BS EN 1991-1-4:2005+A1:2010 - Table 7.7

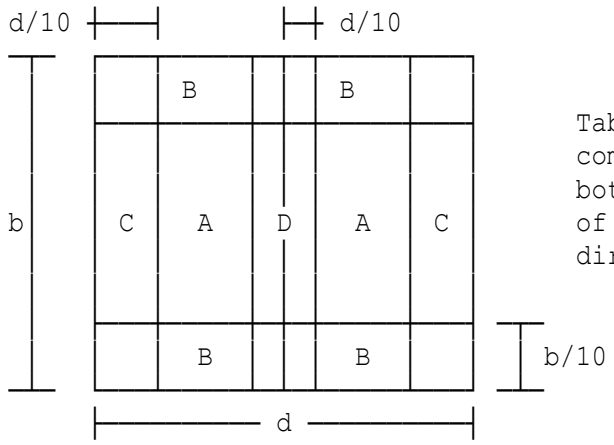

Table 7.7 takes account of the combined effect of the wind on both upper and lower surfaces of the canopy for all wind directions.

Pitch of roof (-20° to 30°) alpha3=30°

Net downward roof pressure (i.e. normal to the roof)

Local net pressure for zone A CplocA=qp*ClocAp=0.8341 kN/m²
Local net pressure for zone B CplocB=qp*ClocBp=1.219 kN/m²
Local net pressure for zone C CplocC=qp*ClocCp=1.027 kN/m²
Local net pressure for zone D CplocD=qp*ClocDp=0.4492 kN/m²

Net upward roof pressure (i.e. normal to the roof)

Local net pressure for zone A CplocA=qp*ClocAn=-0.7186 kN/m²
Local net pressure for zone B CplocB=qp*ClocBn=-0.924 kN/m²
Local net pressure for zone C CplocC=qp*ClocCn=-0.7186 kN/m²
Local net pressure for zone D CplocD=qp*ClocDn=-1.027 kN/m²

Net pressure on fascias and gables

In addition to pressure normal to the canopy, there will be horizontal loads on the canopy due to the wind pressure on any fascia at the eaves or any gable ends. The pressure for the windward and leeward faces could be taken as follows:

Net pressure (winward face) Cpwin=qp*1.3=0.8341 kN/m²
Net pressure (leeward face) Cplee=qp*0.6=0.385 kN/m²

Location: Default case 11 (duopitch roof)

Obstruction height and upwind spacing

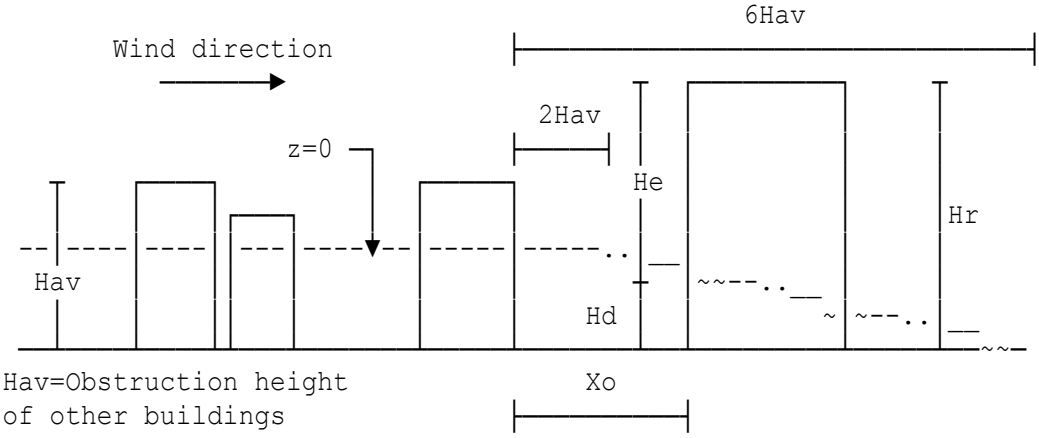

Hav=Obstruction height
of other buildings

Building reference height	Hr=13.77 m
buildings upwind of site	Hav=6.5 m
Upwind spacing of building	Xo=20 m
Displacement height (wind θ=0°)	Hd(0)=3.8 m
Displacement height (wind θ=90°)	Hd(90)=3.8 m
Building height	H=13.77 m

Standard wind loads

Basic wind velocity (Fig. NA.1)	Vbmap=21 m/s
Altitude above mean sea level	Asite=25 m
Directional factor (wind θ=0°)	Cdi(0)=1
Directional factor (wind θ=90°)	Cdi(90)=1
Distance upwind to shoreline	Dis(0)=2.5 km
Distance inside town terrain	Dit(0)=2.5 km
Distance upwind to shoreline	Dis(90)=2.5 km
Distance inside town terrain	Dit(90)=2.5 km
Probability factor	Cp=1

	Effective height (long face)	**He(0)**	**9.97 m**
	Effective height (short face)	**He(90)**	**9.97 m**
	Altitude factor (long face)	**Ca(0)**	**1.025**
DESIGN	**Altitude factor (short face)**	**Ca(90)**	**1.025**
SUMMARY	**Direction factor (long face)**	**Cdi(0)**	**1**
	Direction factor (short face)	**Cdi(90)**	**1**
	Seasonal factor	**Cseason**	**1**
	Probability factor	**Cp**	**1**
	Long face peak velocity pressure	**qp(0)**	**0.6416 kN/m²**
	Short face peak velocity pressure	**qp(90)**	**0.6416 kN/m²**

Peak velocity pressure & pressure coefficients

on walls of rectangular buildings

Height of wall including parapet Hr'=13.77 m
Wind acting on long face of building (wind θ=0°):
Peak velocity pressure based on height above ground 9.97 m.
Peak velocity pressure @ eaves qpe(0)=0.6416 kN/m²
Wind acting on short face of building (wind θ=90°):
Peak velocity pressure based on height above ground 9.97 m.
Peak velocity pressure @ eaves qpe(90)=0.6416 kN/m²

Case 1: Wind on long face of building (i.e. angle θ=0°)

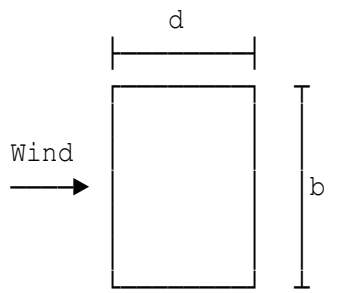

PLAN VIEW

Inwind depth d=20 m
Crosswind width b=60 m

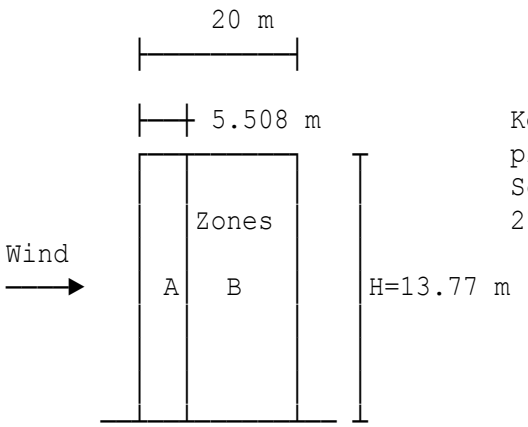

ELEVATION ON SIDE FACE

Key zones for wall pressure data.
Scaling width > d
27.54 m > 20 m

Case 2: Wind on short face of building (i.e. angle θ=90°)

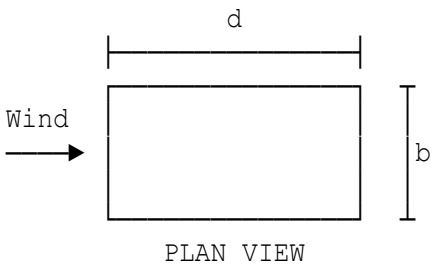

Inwind depth d=60 m
Crosswind width b=20 m

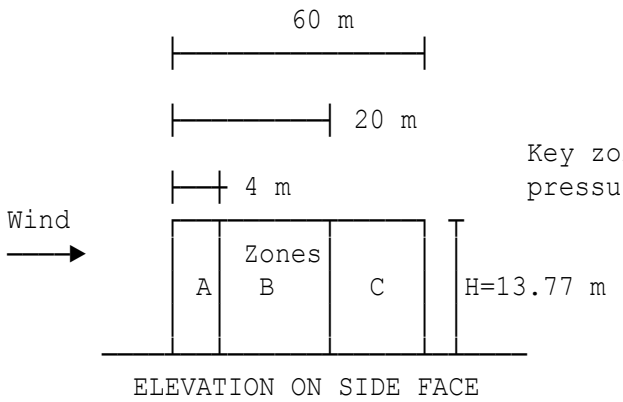

Key zones for wall pressure data.

Wall net pressure Cpi=0.2	**Wind on long face of building**
Windward (front) face	N1LW1=PeLW1-Pi1ww0=0.3583 kN/m²
Leeward (rear) face	N1LW2=PeLW2-Pi1ww0=-0.3958 kN/m²
Isolated Zone A side face	N1LW3=PeLW3-Pi1ww0=-0.8982 kN/m²
Isolated Zone B side face	N1LW4=PeLW4-Pi1ww0=-0.6416 kN/m²

Wall net pressure Cpi=0.2	**Wind on short face of building**
Windward (front) face	N1SW1=PeSW1-Pi1ww90=0.3208 kN/m²
Leeward (rear) face	N1SW2=PeSW2-Pi1ww90=-0.3208 kN/m²
Isolated Zone A side face	N1SW3=PeSW3-Pi1ww90=-0.8982 kN/m²
Isolated Zone B side face	N1SW4=PeSW4-Pi1ww90=-0.6416 kN/m²
Isolated Zone C side face	N1SW5=PeSW5-Pi1ww90=-0.4491 kN/m²

Wall net pressure Cpi=-0.3	**Wind on long face of building**
Windward (front) face	N2LW1=PeLW1-Pi2ww0=0.6791 kN/m²
Leeward (rear) face	N2LW2=PeLW2-Pi2ww0=-0.075 kN/m²
Isolated Zone A side face	N2LW3=PeLW3-Pi2ww0=-0.5774 kN/m²
Isolated Zone B side face	N2LW4=PeLW4-Pi2ww0=-0.3208 kN/m²

Wall net pressure Cpi=-0.3 **Wind on short face of building**

Windward (front) face	N2SW1=PeSW1-Pi2ww90=0.6416 kN/m²
Leeward (rear) face	N2SW2=PeSW2-Pi2ww90=0 kN/m²
Isolated Zone A side face	N2SW3=PeSW3-Pi2ww90=-0.5774 kN/m²
Isolated Zone B side face	N2SW4=PeSW4-Pi2ww90=-0.3208 kN/m²
Isolated Zone C side face	N2SW5=PeSW5-Pi2ww90=-0.1283 kN/m²

External pressure coefficients Cpe for duopitch roofs

Case 1: Wind angle θ=0°

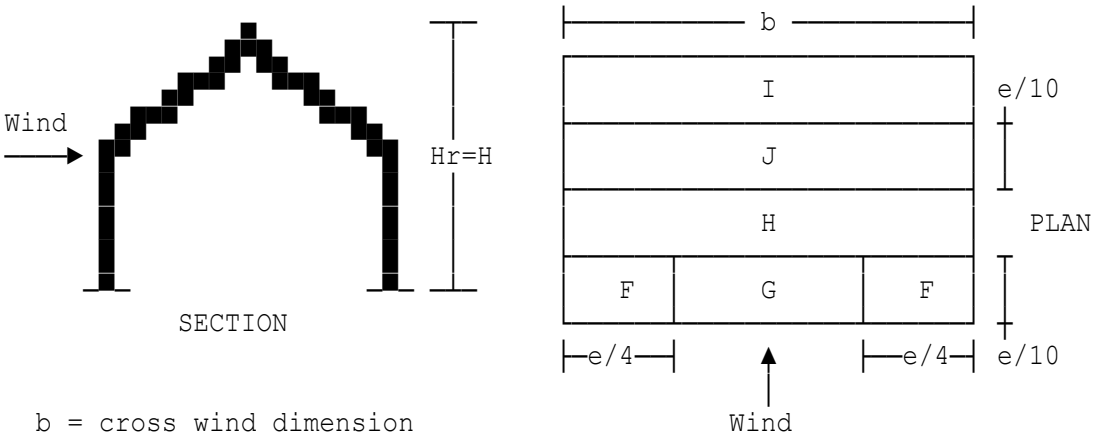

b = cross wind dimension

Roof slope to horizontal Dalpha=30°

Case 2: Wind angle θ=90°

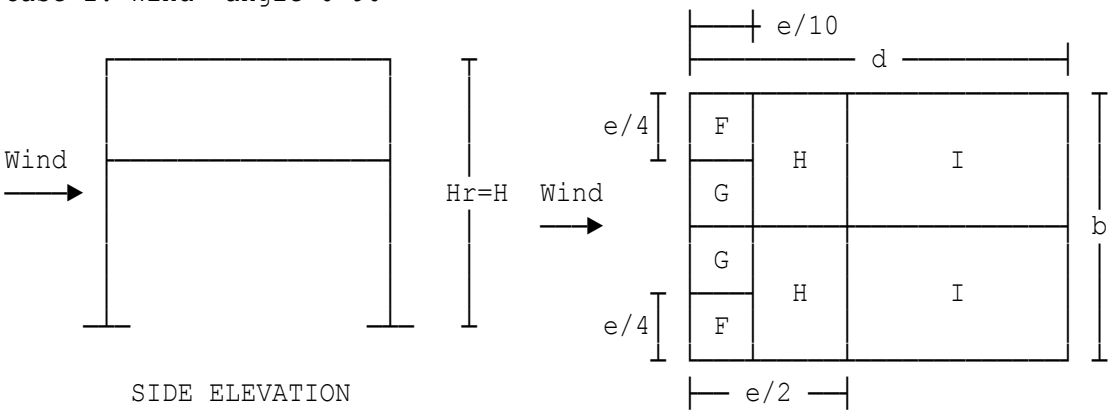

Roof net pressure Cpi=0.2 **Wind θ=0° (long face)**

Roof zone F	N1RF0=PeRF0-PiW1w0=-0.4492 kN/m²
Roof zone G	N1RG0=PeRG0-PiW1w0=-0.4492 kN/m²
Roof zone H	N1RH0=PeRH0-PiW1w0=-0.2567 kN/m²
Roof zone J	N1RJ0=PeRJ0-PiW1w0=-0.7058 kN/m²
Roof zone I	N1RI0=PeRI0-PiW1w0=-0.4492 kN/m²
Roof zone F (+Ve Value)	N1RAF0=PRAF0-PiW1w0=0.385 kN/m²
Roof zone G (+Ve Value)	N1RAG0=PRAG0-PiW1w0=0.1925 kN/m²
Roof zone H (+Ve Value)	N1RAH0=PRAH0-PiW1w0=0.1283 kN/m²
Roof zone J (+Ve Value)	N1RAJ0=PRAJ0-PiW1w0=-0.7058 kN/m²
Roof zone I (+Ve Value)	N1RAI0=PRAI0-PiW1w0=-0.4492 kN/m²

Roof net pressure Cpi=0.2 **Wind θ=90° (short face)**

Roof zone F	N1RF9=PeRF9-PiW1w90=-0.8983 kN/m²
Roof zone G	N1RG9=PeRG9-PiW1w90=-0.8341 kN/m²
Roof zone H	N1RH9=PeRH9-PiW1w90=-0.5133 kN/m²
Roof zone I	N1RI9=PeRI9-PiW1w90=-0.4492 kN/m²
Roof zone F (+Ve Value)	N1RAF9=PRAF9-PiW1w90=0.1925 kN/m²
Roof zone G (+Ve Value)	N1RAG9=PRAG9-PiW1w90=0.1283 kN/m²
Roof zone H (+Ve Value)	N1RAH9=PRAH9-PiW1w90=0.0642 kN/m²
Roof zone I (+Ve Value)	N1RAI9=PRAI9-PiW1w90=0 kN/m²

Roof net pressure Cpi=-0.3 **Wind θ=0° (long face)**

Roof zone F	N2RF0=PeRF0-PiW2w0=-0.1283 kN/m²
Roof zone G	N2RG0=PeRG0-PiW2w0=-0.1283 kN/m²
Roof zone H	N2RH0=PeRH0-PiW2w0=0.0642 kN/m²
Roof zone J	N2RJ0=PeRJ0-PiW2w0=-0.385 kN/m²
Roof zone I	N2RI0=PeRI0-PiW2w0=-0.1283 kN/m²
Roof zone F (+Ve Value)	N2RAF0=PRAF0-PiW2w0=0.7058 kN/m²
Roof zone G (+Ve Value)	N2RAG0=PRAG0-PiW2w0=0.5133 kN/m²
Roof zone H (+Ve Value)	N2RAH0=PRAH0-PiW2w0=0.4492 kN/m²
Roof zone J (+Ve Value)	N2RAJ0=PRAJ0-PiW2w0=-0.385 kN/m²
Roof zone I (+Ve Value)	N2RAI0=PRAI0-PiW2w0=-0.1283 kN/m²

Roof net pressure Cpi=-0.3 **Wind θ=90° (short face)**

Roof zone F	N2RF9=PeRF9-PiW2w90=-0.5775 kN/m²
Roof zone G	N2RG9=PeRG9-PiW2w90=-0.5133 kN/m²
Roof zone H	N2RH9=PeRH9-PiW2w90=-0.1925 kN/m²
Roof zone I	N2RI9=PeRI9-PiW2w90=-0.1283 kN/m²
Roof zone F (+Ve Value)	N2RAF9=PRAF9-PiW2w90=0.5133 kN/m²
Roof zone G (+Ve Value)	N2RAG9=PRAG9-PiW2w90=0.4492 kN/m²
Roof zone H (+Ve Value)	N2RAH9=PRAH9-PiW2w90=0.385 kN/m²
Roof zone I (+Ve Value)	N2RAI9=PRAI9-PiW2w90=0.3208 kN/m²

Location: Default case 12 (duopitch roof)

Obstruction height and upwind spacing

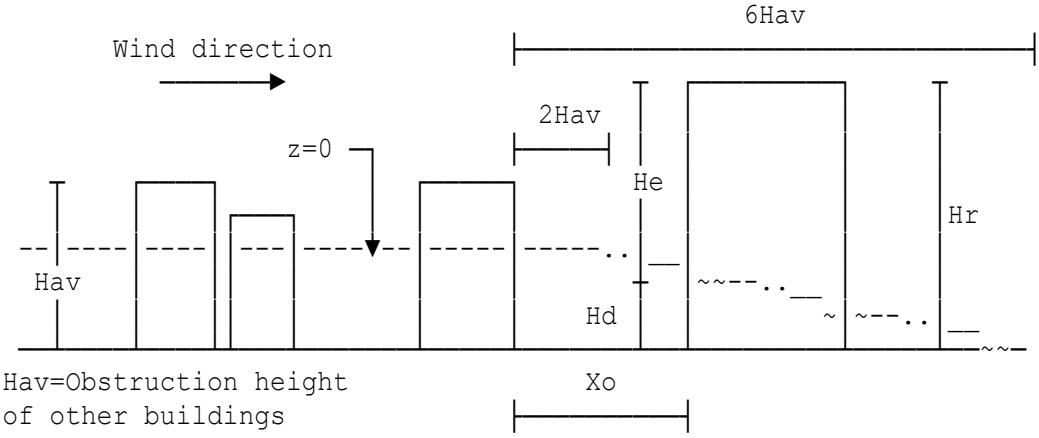

Hav=Obstruction height
of other buildings

Building reference height	Hr=4.3 m
buildings upwind of site	Hav=0.5 m
Upwind spacing of building	Xo=20 m
Displacement height (wind θ=0°)	Hd(0)=0 m
Displacement height (wind θ=90°)	Hd(90)=0 m
Building height	H=4.3 m

Standard wind loads

Basic wind velocity (Fig. NA.1) Vbmap=24 m/s
Site altitude above mean sea level Asite=46 m

Orography is significant - Wind on long face of building

Slope details and site location relative to crest as per Figure NA.2 of NA to BS EN 1991-1-4:2005+A1:2010.

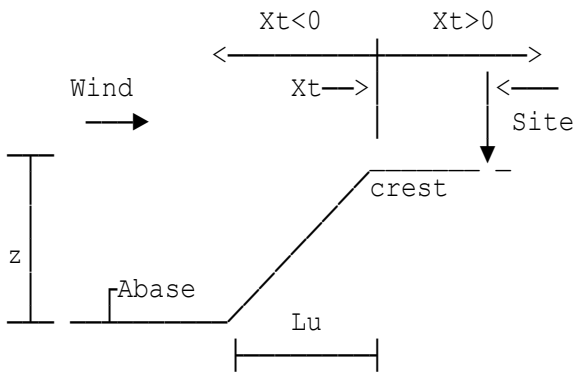

Site altitude is 46 m above mean sea level.

Xt is positive if site is located downwind of crest.

Xt is negative if site is located upwind of crest.

Effective height of the feature Z=45 m

Directional factor (wind θ=0°) Cdi(0)=1
Directional factor (wind θ=90°) Cdi(90)=1
Distance upwind to shoreline Dis(0)=2.5 km
Distance upwind to shoreline Dis(90)=2.5 km
Probability factor Cp=1

	Effective height (long face)	**He(0)**	**4.3 m**
	Effective height (short face)	**He(90)**	**4.3 m**
	Altitude factor (long face)	**Ca(0)**	**1.046**
DESIGN	**Altitude factor (short face)**	**Ca(90)**	**1.046**
SUMMARY	**Direction factor (long face)**	**Cdi(0)**	**1**
	Direction factor (short face)	**Cdi(90)**	**1**
	Seasonal factor	**Cseason**	**1**
	Probability factor	**Cp**	**1**
	Long face peak velocity pressure	**qp(0)**	**1.114 kN/m²**
	Short face peak velocity pressure	**qp(90)**	**0.7919 kN/m²**

Peak velocity pressure & pressure coefficients

on walls of rectangular buildings

Height of wall including parapet Hr'=4.3 m
Wind acting on long face of building (wind θ=0°):
Peak velocity pressure based on height above ground 4.3 m.
Peak velocity pressure @ eaves qpe(0)=1.114 kN/m²
Wind acting on short face of building (wind θ=90°):
Peak velocity pressure based on height above ground 4.3 m.
Peak velocity pressure @ eaves qpe(90)=0.7919 kN/m²

Case 1: Wind on long face of building (i.e. angle θ=0°)

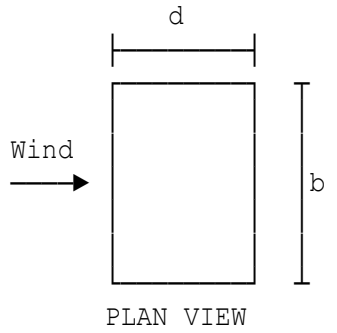

PLAN VIEW

Inwind depth d=20 m
Crosswind width b=60 m

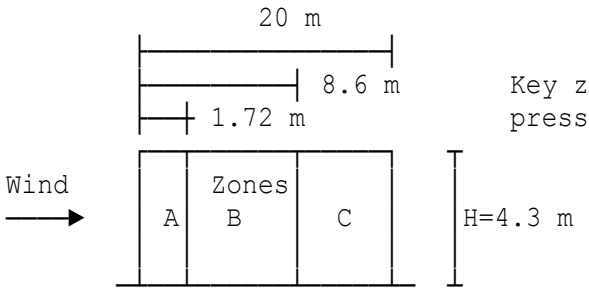

ELEVATION ON SIDE FACE

Key zones for wall pressure data.

Case 2: Wind on short face of building (i.e. angle θ=90°)

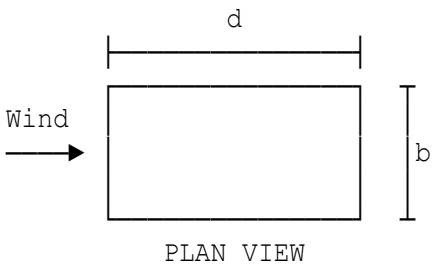

Inwind depth d=60 m
Crosswind width b=20 m

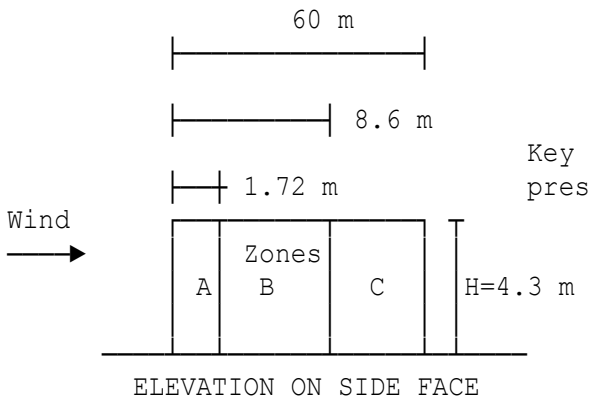

Key zones for wall pressure data.

Wall net pressure Cpi=0.2	**Wind on long face of building**
Windward (front) face	N1LW1=PeLW1-Pi1ww0=0.557 kN/m²
Leeward (rear) face	N1LW2=PeLW2-Pi1ww0=-0.557 kN/m²
Isolated Zone A side face	N1LW3=PeLW3-Pi1ww0=-1.56 kN/m²
Isolated Zone B side face	N1LW4=PeLW4-Pi1ww0=-1.114 kN/m²
Isolated Zone C side face	N1LW5=PeLW5-Pi1ww0=-0.7798 kN/m²

Wall net pressure Cpi=0.2	**Wind on short face of building**
Windward (front) face	N1SW1=PeSW1-Pi1ww90=0.396 kN/m²
Leeward (rear) face	N1SW2=PeSW2-Pi1ww90=-0.396 kN/m²
Isolated Zone A side face	N1SW3=PeSW3-Pi1ww90=-1.109 kN/m²
Isolated Zone B side face	N1SW4=PeSW4-Pi1ww90=-0.7919 kN/m²
Isolated Zone C side face	N1SW5=PeSW5-Pi1ww90=-0.5543 kN/m²

Wall net pressure Cpi=-0.3	**Wind on long face of building**
Windward (front) face	N2LW1=PeLW1-Pi2ww0=1.114 kN/m²
Leeward (rear) face	N2LW2=PeLW2-Pi2ww0=0 kN/m²
Isolated Zone A side face	N2LW3=PeLW3-Pi2ww0=-1.003 kN/m²
Isolated Zone B side face	N2LW4=PeLW4-Pi2ww0=-0.557 kN/m²
Isolated Zone C side face	N2LW5=PeLW5-Pi2ww0=-0.2228 kN/m²

Wall net pressure Cpi=-0.3 **Wind on short face of building**

Windward (front) face	N2SW1=PeSW1-Pi2ww90=0.7919 kN/m²
Leeward (rear) face	N2SW2=PeSW2-Pi2ww90=0 kN/m²
Isolated Zone A side face	N2SW3=PeSW3-Pi2ww90=-0.7127 kN/m²
Isolated Zone B side face	N2SW4=PeSW4-Pi2ww90=-0.396 kN/m²
Isolated Zone C side face	N2SW5=PeSW5-Pi2ww90=-0.1584 kN/m²

External pressure coefficients Cpe for duopitch roofs

Case 1: Wind angle θ=0°

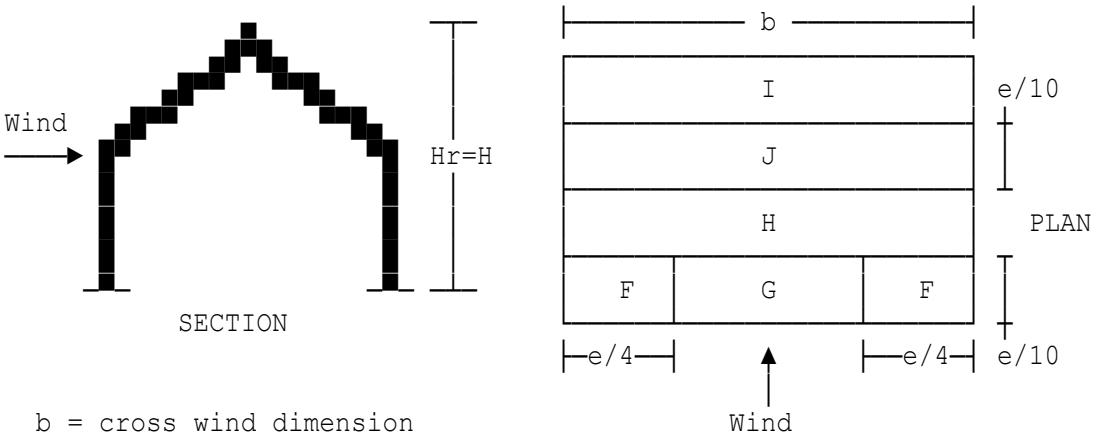

b = cross wind dimension

Roof slope to horizontal Dalpha=30°

Case 2: Wind angle θ=90°

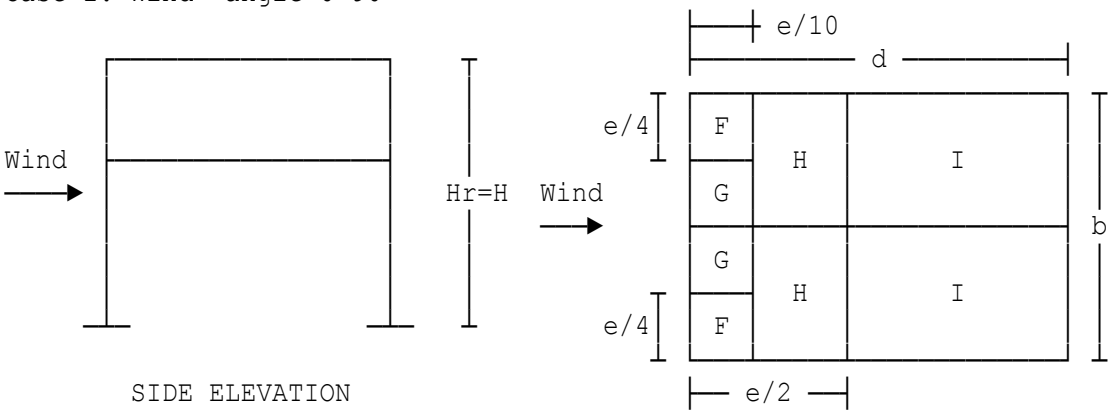

Roof net pressure Cpi=0.2 **Wind θ=0° (long face)**

Roof zone F	N1RF0=PeRF0-PiW1w0=-0.7801 kN/m²
Roof zone G	N1RG0=PeRG0-PiW1w0=-0.7801 kN/m²
Roof zone H	N1RH0=PeRH0-PiW1w0=-0.4457 kN/m²
Roof zone J	N1RJ0=PeRJ0-PiW1w0=-1.226 kN/m²
Roof zone I	N1RI0=PeRI0-PiW1w0=-0.7801 kN/m²
Roof zone F (+Ve Value)	N1RAF0=PRAF0-PiW1w0=0.6686 kN/m²
Roof zone G (+Ve Value)	N1RAG0=PRAG0-PiW1w0=0.3343 kN/m²
Roof zone H (+Ve Value)	N1RAH0=PRAH0-PiW1w0=0.2229 kN/m²
Roof zone J (+Ve Value)	N1RAJ0=PRAJ0-PiW1w0=-1.226 kN/m²
Roof zone I (+Ve Value)	N1RAI0=PRAI0-PiW1w0=-0.7801 kN/m²

Roof net pressure Cpi=0.2 **Wind θ=90° (short face)**

Roof zone F	N1RF9=PeRF9-PiW1w90=-1.109 kN/m²
Roof zone G	N1RG9=PeRG9-PiW1w90=-1.029 kN/m²
Roof zone H	N1RH9=PeRH9-PiW1w90=-0.6335 kN/m²
Roof zone I	N1RI9=PeRI9-PiW1w90=-0.5543 kN/m²
Roof zone F (+Ve Value)	N1RAF9=PRAF9-PiW1w90=0.2376 kN/m²
Roof zone G (+Ve Value)	N1RAG9=PRAG9-PiW1w90=0.1584 kN/m²
Roof zone H (+Ve Value)	N1RAH9=PRAH9-PiW1w90=0.0792 kN/m²
Roof zone I (+Ve Value)	N1RAI9=PRAI9-PiW1w90=0 kN/m²

Roof net pressure Cpi=-0.3 **Wind θ=0° (long face)**

Roof zone F	N2RF0=PeRF0-PiW2w0=-0.2229 kN/m²
Roof zone G	N2RG0=PeRG0-PiW2w0=-0.2229 kN/m²
Roof zone H	N2RH0=PeRH0-PiW2w0=0.1114 kN/m²
Roof zone J	N2RJ0=PeRJ0-PiW2w0=-0.6686 kN/m²
Roof zone I	N2RI0=PeRI0-PiW2w0=-0.2229 kN/m²
Roof zone F (+Ve Value)	N2RAF0=PRAF0-PiW2w0=1.226 kN/m²
Roof zone G (+Ve Value)	N2RAG0=PRAG0-PiW2w0=0.8915 kN/m²
Roof zone H (+Ve Value)	N2RAH0=PRAH0-PiW2w0=0.7801 kN/m²
Roof zone J (+Ve Value)	N2RAJ0=PRAJ0-PiW2w0=-0.6686 kN/m²
Roof zone I (+Ve Value)	N2RAI0=PRAI0-PiW2w0=-0.2229 kN/m²

Roof net pressure Cpi=-0.3 **Wind θ=90° (short face)**

Roof zone F	N2RF9=PeRF9-PiW2w90=-0.7127 kN/m²
Roof zone G	N2RG9=PeRG9-PiW2w90=-0.6335 kN/m²
Roof zone H	N2RH9=PeRH9-PiW2w90=-0.2376 kN/m²
Roof zone I	N2RI9=PeRI9-PiW2w90=-0.1584 kN/m²
Roof zone F (+Ve Value)	N2RAF9=PRAF9-PiW2w90=0.6335 kN/m²
Roof zone G (+Ve Value)	N2RAG9=PRAG9-PiW2w90=0.5543 kN/m²
Roof zone H (+Ve Value)	N2RAH9=PRAH9-PiW2w90=0.4751 kN/m²
Roof zone I (+Ve Value)	N2RAI9=PRAI9-PiW2w90=0.396 kN/m²

Location: Default case 13 (free-standing wall)

Free-standing wall details

Eff.height of free-standing wall He=5 m

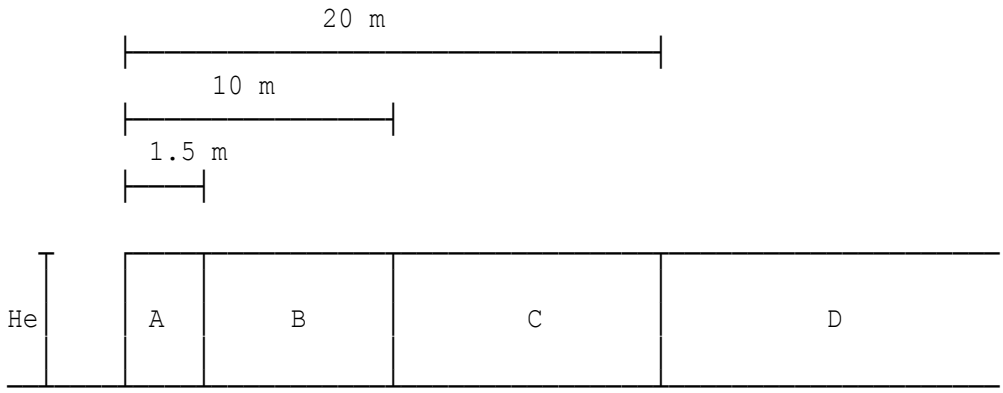

ELEVATION ON FREE-STANDING WALL

Standard wind loads

Basic wind velocity (Fig. NA.1) Vbmap=21 m/s
Site altitude above mean sea level Asite=25 m

Slope details and site location relative to crest as per Fig. NA.2 of NA to BS EN 1991-1-4:2005+A1:2010

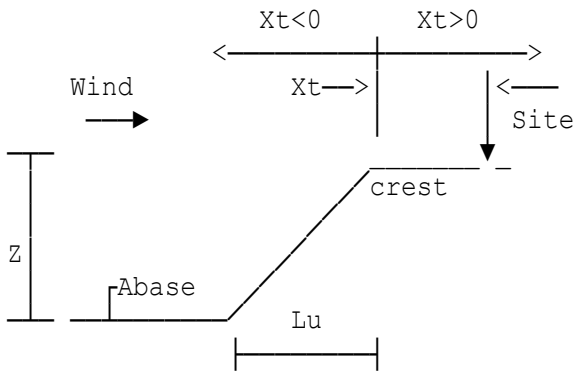

Site altitude is 25 m above mean sea level.

Xt is positive if site is located downwind of crest.

Xt is negative if site is located upwind of crest.

Height to crest Z=10 m

Directional factor	Cdi=1
Distance upwind to shoreline	Dist=2.5 km
Distance inside town terrain	Dit=2 km
Probability factor	Cp=1

	Effective height	**He**	**5 m**
DESIGN	**Altitude factor**	**Ca**	**1.025**
SUMMARY	**Direction factor**	**Cdi**	**1**
	Seasonal factor	**Cseason**	**1**
	Probability factor	**Cp**	**1**
	Peak velocity pressure	**qp**	**0.7211 kN/m²**

Length of wall	Lwall=25 m
Length of the return corner	rcornL=5 m

Net pressure on wall

Net pressure on wall zone A	Cpwin=qp*CpA=1.514 kN/m²
Net pressure on wall zone B	Cpwin=qp*CpB=1.298 kN/m²
Net pressure on wall zone C	Cpwin=qp*CpC=1.009 kN/m²
Net pressure on wall zone D	Cpwin=qp*CpD=0.8653 kN/m²

Location: Default case 14 (signboard)

Signboard details

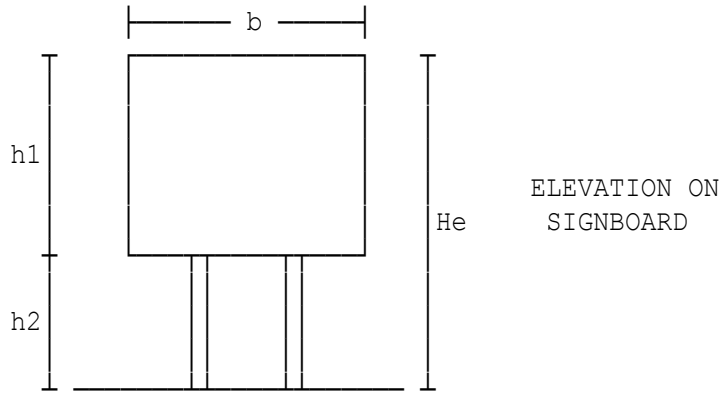

Effective height of signboard He=5 m
Depth of signboard h1=3 m
Width of signboard b=4 m

Standard wind loads

Basic wind velocity (Fig. NA.1) Vbmap=21 m/s
Site altitude above mean sea level Asite=25 m

Slope details and site location relative to crest as per Fig. NA.2 of NA to BS EN 1991-1-4:2005+A1:2010

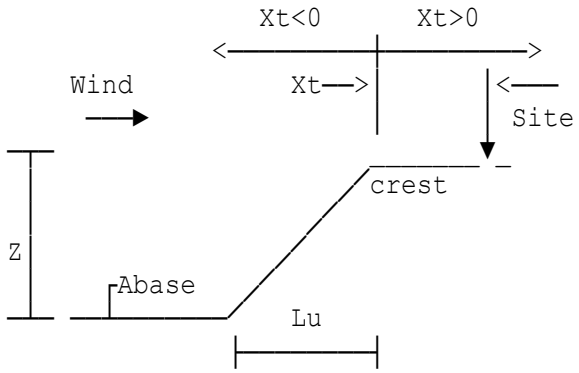

Site altitude is 25 m above mean sea level.

Xt is positive if site is located downwind of crest.

Xt is negative if site is located upwind of crest.

Height to crest Z=10 m

Directional factor	Cdi=1	
Distance upwind to shoreline	Dist=2.5 km	
Distance inside town terrain	Dit=2 km	
Probability factor	Cp=1	

	Effective height	**He**	**5 m**
DESIGN	**Altitude factor**	**Ca**	**1.025**
SUMMARY	**Direction factor**	**Cdi**	**1**
	Seasonal factor	**Cseason**	**1**
	Probability factor	**Cp**	**1**
	Peak velocity pressure	**qp**	**0.6283 kN/m²**
Net pressure coefficient	Cpwf=1.80		
Net pressure on signboard	Cpwin=qp*Cpwf=1.131 kN/m²		

Location: Default case 15 (signboard)

Signboard details

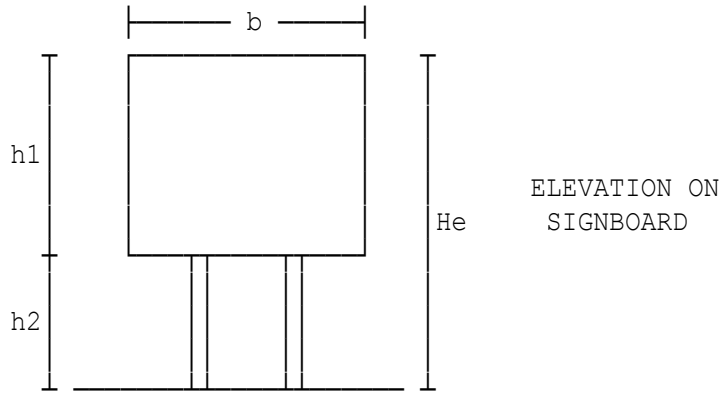

Effective height of signboard He=4 m
Depth of signboard h1=3.5 m
Width of signboard b=5 m

Standard wind loads

Basic wind velocity (Fig. NA.1) Vbmap=21 m/s
Site altitude above mean sea level Asite=25 m

Slope details and site location relative to crest as per Fig. NA.2 of NA to BS EN 1991-1-4:2005+A1:2010

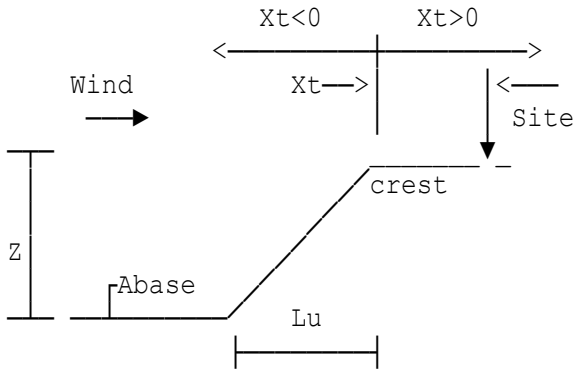

Site altitude is 25 m above mean sea level.

Xt is positive if site is located downwind of crest.

Xt is negative if site is located upwind of crest.

Height to crest Z=10 m

Directional factor	Cdi=1
Distance upwind to shoreline	Dist=2.5 km
Distance inside town terrain	Dit=2 km
Probability factor	Cp=1

	Effective height	**He**	**4 m**
DESIGN	**Altitude factor**	**Ca**	**1.025**
SUMMARY	**Direction factor**	**Cdi**	**1**
	Seasonal factor	**Cseason**	**1**
	Probability factor	**Cp**	**1**
	Peak velocity pressure	**qp**	**0.5649 kN/m²**

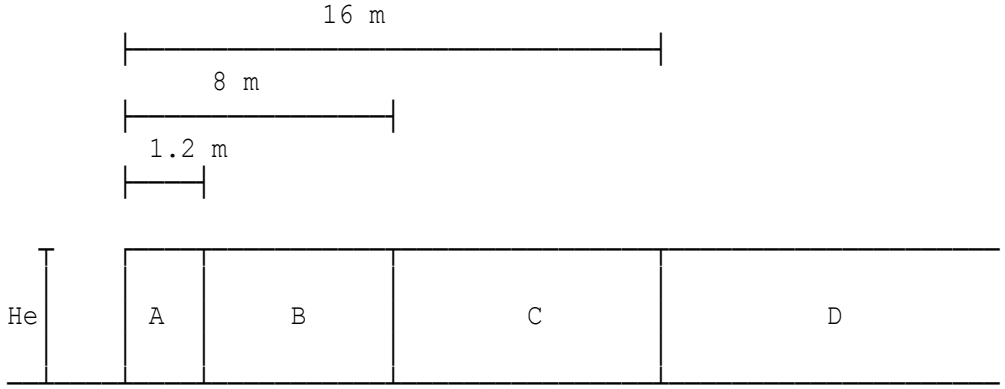

ELEVATION ON FREE-STANDING WALL

Length of wall Lwall=10 m

Net pressure on wall

Net pressure on signboard zone A	Cpwin=qp*CpA=1.299 kN/m²
Net pressure on signboard zone B	Cpwin=qp*CpB=0.7909 kN/m²
Net pressure on signboard zone C	Cpwin=qp*CpC=0.6779 kN/m²
Net pressure on signboard zone D	Cpwin=qp*CpD=0.6779 kN/m²

Location: Default case 16 (free-standing parapet)

Free-standing parapet details

free-standing parapet He=1 m

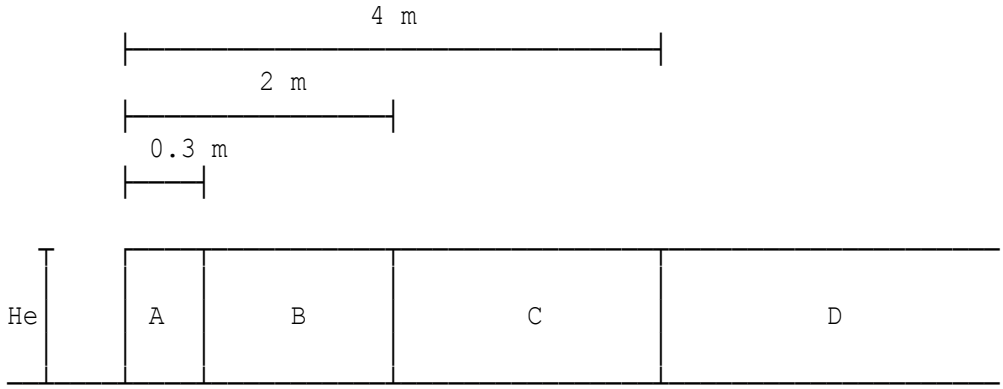

ELEVATION ON FREE-STANDING PARAPET

Standard wind loads

Basic wind velocity (Fig. NA.1) Vbmap=24 m/s
Site altitude above mean sea level Asite=25 m

Slope details and site location relative to crest as per Fig. NA.2 of NA to BS EN 1991-1-4:2005+A1:2010

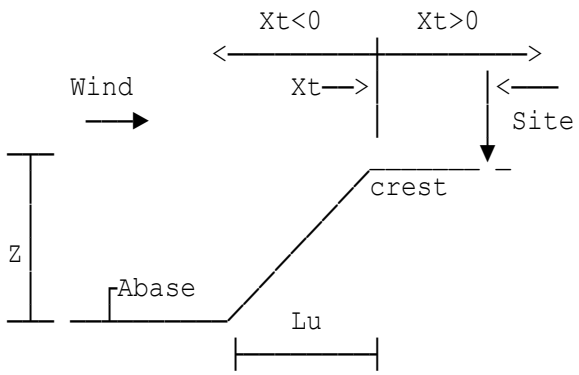

Site altitude is 25 m above mean sea level.

Xt is positive if site is located downwind of crest.

Xt is negative if site is located upwind of crest.

Height to crest Z=10 m

Directional factor	Cdi=1
Distance upwind to shoreline	Dist=2.5 km
Distance inside town terrain	Dit=2 km
Probability factor	Cp=1

	Effective height	**He**	**1 m**
DESIGN	**Altitude factor**	**Ca**	**1.025**
SUMMARY	**Direction factor**	**Cdi**	**1**
	Seasonal factor	**Cseason**	**1**
	Probability factor	**Cp**	**1**
	Peak velocity pressure	**qp**	**0.5091 kN/m²**

Length of wall Lwall=10 m

Net pressure on parapet

Net pressure on parapet zone A	Cpwin=qp*CpA=1.731 kN/m²
Net pressure on parapet zone B	Cpwin=qp*CpB=1.069 kN/m²
Net pressure on parapet zone C	Cpwin=qp*CpC=0.8655 kN/m²
Net pressure on parapet zone D	Cpwin=qp*CpD=0.6109 kN/m²

Location: Default case 17

Obstruction height and upwind spacing

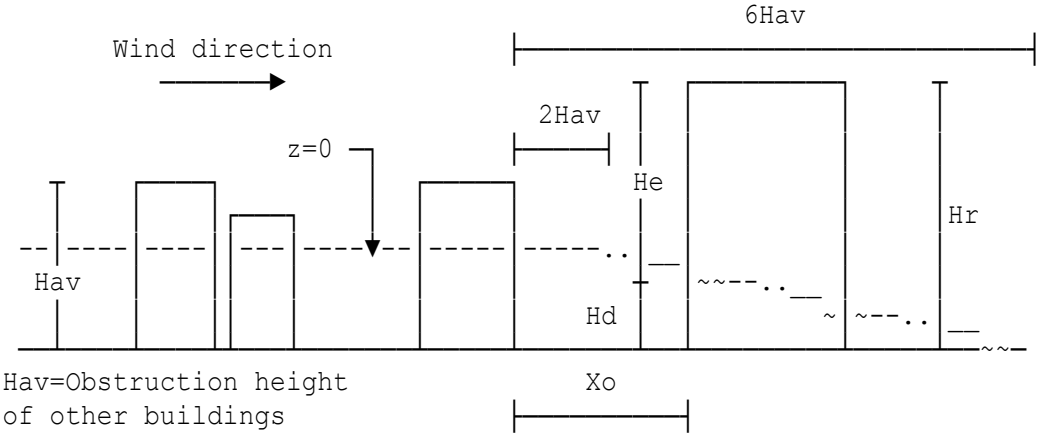

Hav=Obstruction height
of other buildings

Building reference height	Hr=9.64 m
buildings upwind of site	Hav=5 m
Upwind spacing of building	Xo=20 m
Displacement height (wind θ=0°)	Hd(0)=0 m
Displacement height (wind θ=90°)	Hd(90)=0 m
Building height	H=9.64 m

Standard wind loads

Basic wind velocity (Fig. NA.1) Vbmap=23.5 m/s
Site altitude above mean sea level Asite=123.6 m

Orography is significant in both orthogonal directions

Slope details and site location relative to crest as per Figure NA.2 of NA to BS EN 1991-1-4:2005+A1:2010.

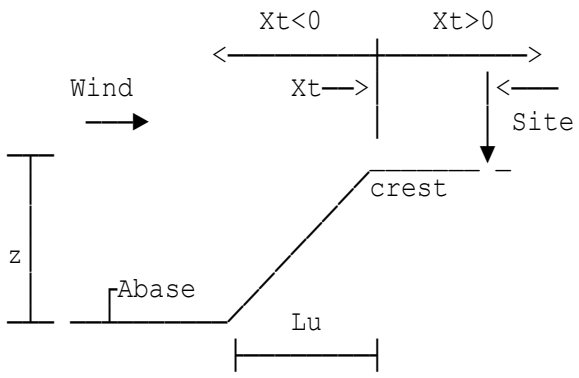

Site altitude is 123.6 m above mean sea level.

Xt is positive if site is located downwind of crest.

Xt is negative if site is located upwind of crest.

Effective height of the feature Z=3.6 m

Directional factor (wind θ=0°)	Cdi(0)=0.995
Directional factor (wind θ=90°)	Cdi(90)=1
Distance upwind to shoreline	Dis(0)=154 km
Distance upwind to shoreline	Dis(90)=141 km
Probability factor	Cp=1

	Effective height (long face)	**He(0)**	**9.64 m**
	Effective height (short face)	**He(90)**	**9.64 m**
	Altitude factor (long face)	**Ca(0)**	**1.124**
DESIGN	**Altitude factor (short face)**	**Ca(90)**	**1.124**
SUMMARY	**Direction factor (long face)**	**Cdi(0)**	**0.995**
	Direction factor (short face)	**Cdi(90)**	**1**
	Seasonal factor	**Cseason**	**1**
	Probability factor	**Cp**	**1**
	Long face peak velocity pressure	**qp(0)**	**1.072 kN/m²**
	Short face peak velocity pressure	**qp(90)**	**1.082 kN/m²**

Location: Default case 18

Obstruction height and upwind spacing

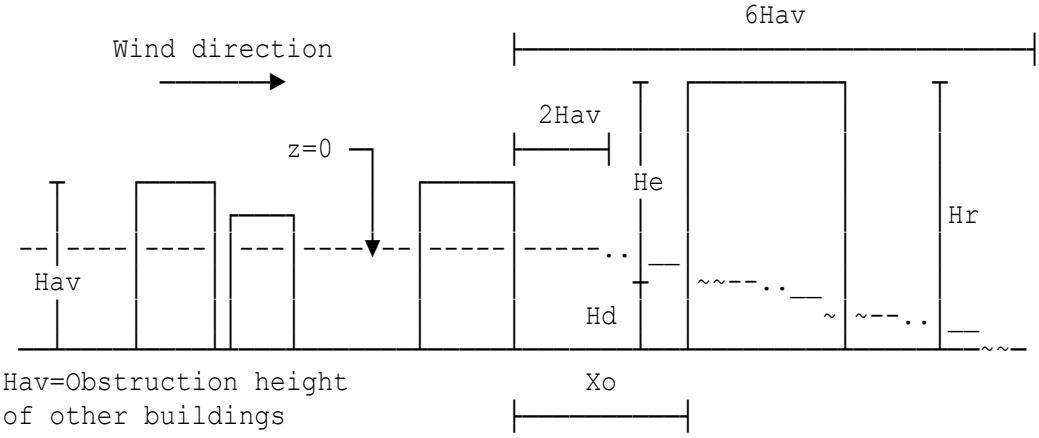

Hav=Obstruction height
of other buildings

Building reference height	Hr=9.64 m
buildings upwind of site	Hav=5 m
Upwind spacing of building	Xo=20 m
Displacement height (wind θ=0°)	Hd(0)=7.57 m
Displacement height (wind θ=90°)	Hd(90)=0 m
Building height	H=9.64 m

Standard wind loads

Basic wind velocity (Fig. NA.1)	Vbmap=23.5 m/s
Site altitude above mean sea level	Asite=123.6 m

Orography is significant - Wind on short face of building

Slope details and site location relative to crest as per Figure NA.2 of NA to BS EN 1991-1-4:2005+A1:2010.

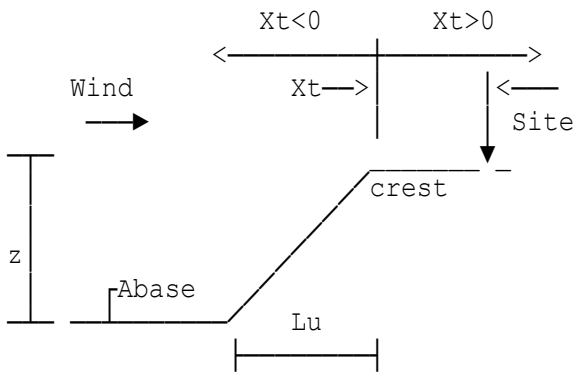

Site altitude is 123.6 m above mean sea level.

Xt is positive if site is located downwind of crest.

Xt is negative if site is located upwind of crest.

Effective height of the feature Z=3.6 m

Directional factor (wind θ=0°)	Cdi(0)=0.83
Directional factor (wind θ=90°)	Cdi(90)=0.8
Distance upwind to shoreline	Dis(0)=60 km
Distance upwind to shoreline	Dis(90)=6 km
Probability factor	Cp=1

	Effective height (long face)	**He(0)**	**2.07 m**
	Effective height (short face)	**He(90)**	**9.64 m**
	Altitude factor (long face)	**Ca(0)**	**1.124**
DESIGN	**Altitude factor (short face)**	**Ca(90)**	**1.124**
SUMMARY	**Direction factor (long face)**	**Cdi(0)**	**0.83**
	Direction factor (short face)	**Cdi(90)**	**0.8**
	Seasonal factor	**Cseason**	**1**
	Probability factor	**Cp**	**1**
	Long face peak velocity pressure	**qp(0)**	**0.4248 kN/m²**
	Short face peak velocity pressure	**qp(90)**	**0.7544 kN/m²**

Location: Default case 19 Flat roof (topography critical, H > 58m)

Obstruction height and upwind spacing

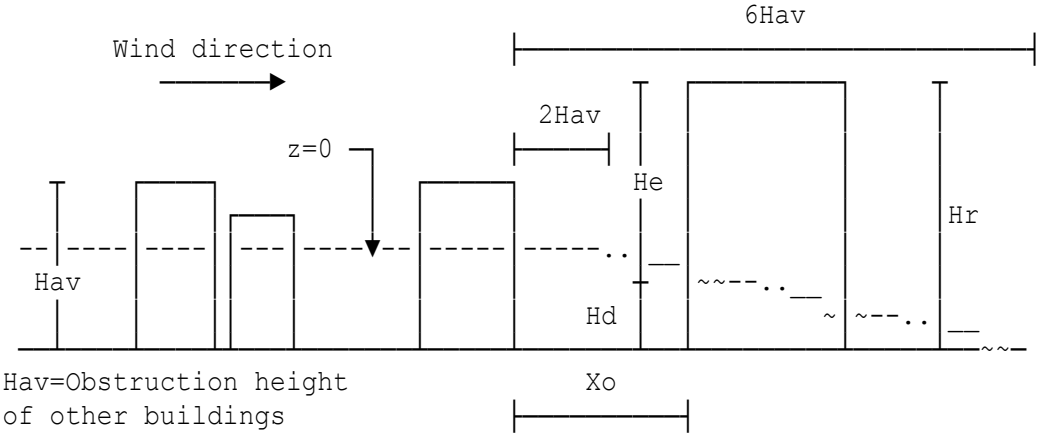

Hav=Obstruction height
of other buildings

Building reference height Hr=58 m
Displacement height (wind θ=0°) Hd(0)=0 m
Displacement height (wind θ=90°) Hd(90)=0 m
Building height H=58 m

Standard wind loads

Basic wind velocity (Fig. NA.1) Vbmap=22.5 m/s
Site altitude above mean sea level Asite=35 m

Orography is significant - Wind on long face of building

Slope details and site location relative to crest as per Figure NA.2 of NA to BS EN 1991-1-4:2005+A1:2010.

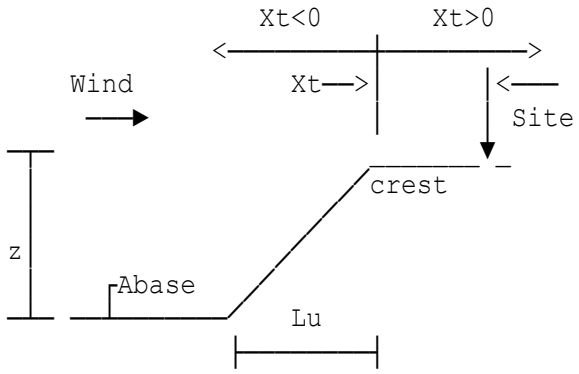

Site altitude is 35 m above mean sea level.

Xt is positive if site is located downwind of crest.

Xt is negative if site is located upwind of crest.

Effective height of the feature Z=10 m

Directional factor (wind θ=0°) Cdi(0)=0.85
Directional factor (wind θ=90°) Cdi(90)=0.85
Seasonal factor Cseason=0.86
Distance upwind to shoreline Dis(0)=2.5 km
Distance upwind to shoreline Dis(90)=2.5 km
Probability factor Cp=1

	Effective height (long face)	**He(0)**	**58 m**
	Effective height (short face)	**He(90)**	**58 m**
	Altitude factor (long face)	**Ca(0)**	**1.035**
DESIGN	**Altitude factor (short face)**	**Ca(90)**	**1.035**
SUMMARY	**Direction factor (long face)**	**Cdi(0)**	**0.85**
	Direction factor (short face)	**Cdi(90)**	**0.85**
	Seasonal factor	**Cseason**	**0.86**
	Probability factor	**Cp**	**1**
	Long face peak velocity pressure	**qp(0)**	**0.7266 kN/m²**
	Short face peak velocity pressure	**qp(90)**	**0.6672 kN/m²**

Peak velocity pressure & pressure coefficients

on walls of rectangular buildings

Height of wall including parapet Hr'=58 m
Wind acting on long face of building (wind θ=0°):
Peak velocity pressure based on height above ground 58 m.
Peak velocity pressure @ eaves qpe(0)=0.7266 kN/m²
Wind acting on short face of building (wind θ=90°):
Peak velocity pressure based on height above ground 58 m.
Peak velocity pressure @ eaves qpe(90)=0.6672 kN/m²

Case 1: Wind on long face of building (i.e. angle θ=0°)

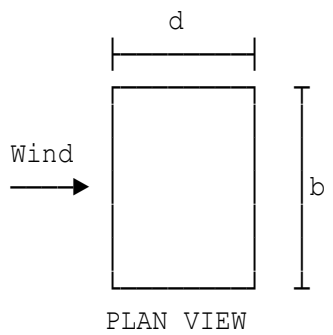

Inwind depth d=40.5 m
Crosswind width b=150 m

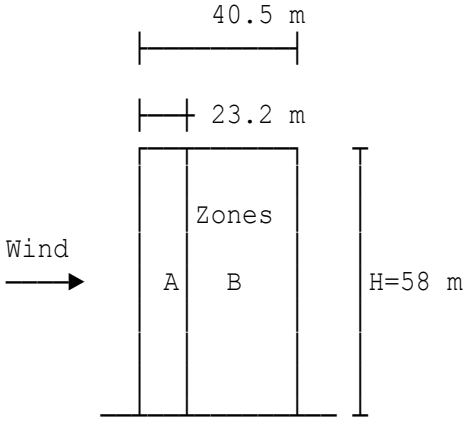

Key zones for wall pressure data.
Scaling width > d
116 m > 40.5 m

ELEVATION ON SIDE FACE

Case 2: Wind on short face of building (i.e. angle θ=90°)

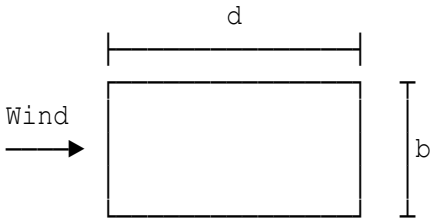

Inwind depth d=150 m
Crosswind width b=40.5 m

PLAN VIEW

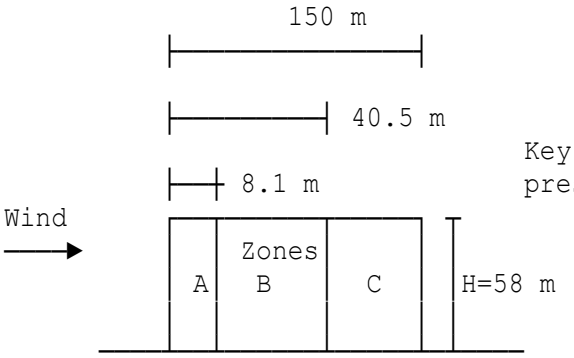

Key zones for wall pressure data.

ELEVATION ON SIDE FACE

External pressure coefficients Cpe for flat roofs

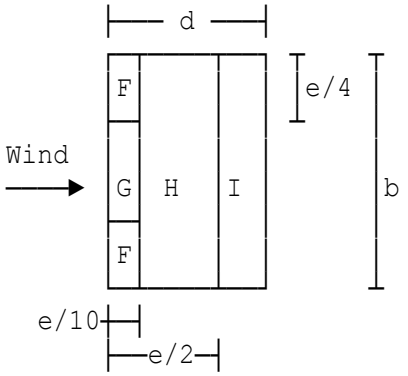

PLAN VIEW

Wind on long face (θ=0°)

Inwind depth d=40.5 m
Crosswind width b=150 m

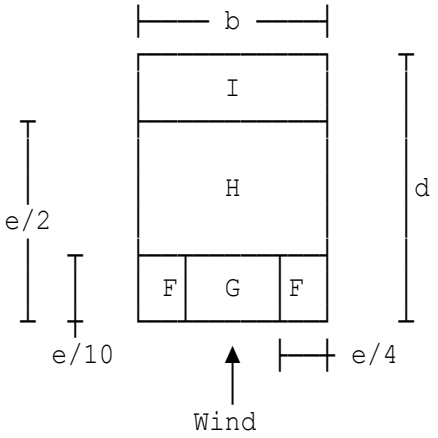

PLAN VIEW

Wind on short face (θ=90°)

Inwind depth d=150 m
Crosswind width b=40.5 m

Location: Lateral earth pressure due to surcharge (line load)

Analysis of lateral earth pressure for surcharges by theory of elasticity. Ref: 'Foundation Analysis & Design' by Joseph E. Bowles.

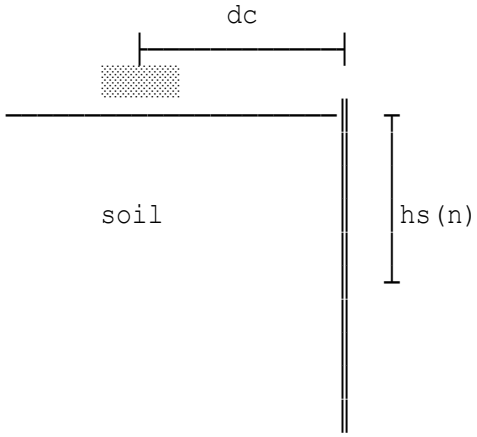

Assumes a rigid wall and
Poisson's ratio =0.5

dc= distance to centre of load
hs(n)=depth to subdivision n

Line loading	ll=100 kN/m
Distance to centre of load	dc=2 m
Height of wall	hw=4 m
Number of subdivisions	ns=8
Depth to subdivision 1	hs(1)=hw/ns=0.5 m
Depth ratio	nr(1)=hs(n)/hw=0.125
	ma=mr^2*nr(n)=0.03125
	mb=(mr^2+(nr(n))^2)^2=0.070557
Pressure at depth 0.5	qh(1)=4/PI*ll/hw*ma/mb=14.098

Calculations repeated for each depth.

Depth	nr (depth ratio)	Horiz pressure
0	0	0
0.5	0.125	14.098
1	0.25	20.372
1.5	0.375	19.557
2	0.5	15.915
2.5	0.625	12.119
3	0.75	9.0408
3.5	0.875	6.7504
4	1	5.093

Pressures relate to surcharge load only.

Location: Lateral earth pressure due to surcharge (point load)

Analysis of lateral earth pressure for surcharges by theory of elasticity. Ref: 'Foundation Analysis & Design' by Joseph E. Bowles.

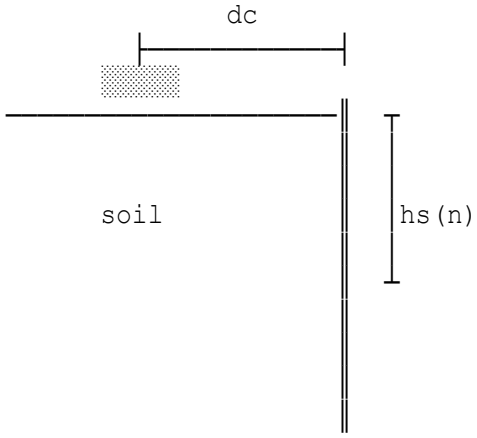

Assumes a rigid wall and
Poisson's ratio =0.5

dc= distance to centre of load
hs(n)=depth to subdivision n

Point loading	pl=500 kN
Distance to centre of load	dc=2 m
Height of wall	hw=4 m
Number of subdivisions	ns=10
Depth to subdivision 1	hs(1)=hw/ns=0.4 m
Depth ratio	nr(1)=hs(n)/hw=0.1
	ma=mr^2*(nr(n))^2=0.0025
	mb=(mr^2+(nr(n))^2)^3=0.017576
Pressure 0.5m to side	qhd(1)=qh(n)*(COS(1.1*ad))^2=7.31

Calculations repeated for each depth.

Depth	Horizontal pressure - equal about centre of load Distance away from centre of load				
	2.0m	1.5m	1.0m	0.5m	centre
0	0	0	0	0	0
0.4	3.3184	4.5415	5.9925	7.31	7.8676
0.8	9.5657	13.091	17.274	21.072	22.679
1.2	13.355	18.278	24.118	29.42	31.664
1.6	13.54	18.53	24.451	29.827	32.102
2	11.665	15.964	21.065	25.696	27.656
2.4	9.2505	12.66	16.705	20.377	21.932
2.8	7.0527	9.652	12.736	15.536	16.721
3.2	5.295	7.2465	9.5618	11.664	12.554
3.6	3.9666	5.4286	7.1631	8.7378	9.4044
4	2.9862	4.0868	5.3926	6.5782	7.08

Pressures relate to surcharge load only.

Copyright 1986-2024 Fitzroy Systems Ltd.

Location: Lateral earth pressure due to surcharge (strip load)

Analysis of lateral earth pressure for surcharges by theory of elasticity. Ref: 'Foundation Analysis & Design' by Joseph E. Bowles.

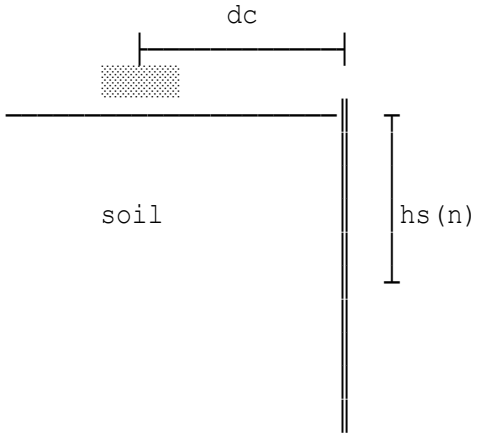

Assumes a rigid wall and
Poisson's ratio =0.5

dc= distance to centre of load
hs(n)=depth to subdivision n

Strip loading	sl=100 kN/m²
Distance to centre of load	dc=2 m
Width of load	dw=1 m
Height of wall	hw=4 m
Number of subdivisions	ns=10
Pressure at depth 0.4	qh(1)=2*sl/PI*(ar(n)-sr*cc)=12.471

Calculations repeated for each depth.

Depth m	A degrees	B degrees	Horiz pressure
0	0	0	0
0.4	78.69	5.8411	12.471
0.8	68.199	10.328	19.74
1.2	59.036	13.019	21.214
1.6	51.34	14.228	19.244
2	45	14.47	16.078
2.4	39.806	14.164	12.928
2.8	35.538	13.582	10.242
3.2	32.005	12.884	8.0951
3.6	29.055	12.158	6.4255
4	26.565	11.449	5.1393

Pressures relate to surcharge load only.

Location: Pressure from retained cohesionless soil

Depth to point considered h=5 m

Pressure acting on vertical surface:

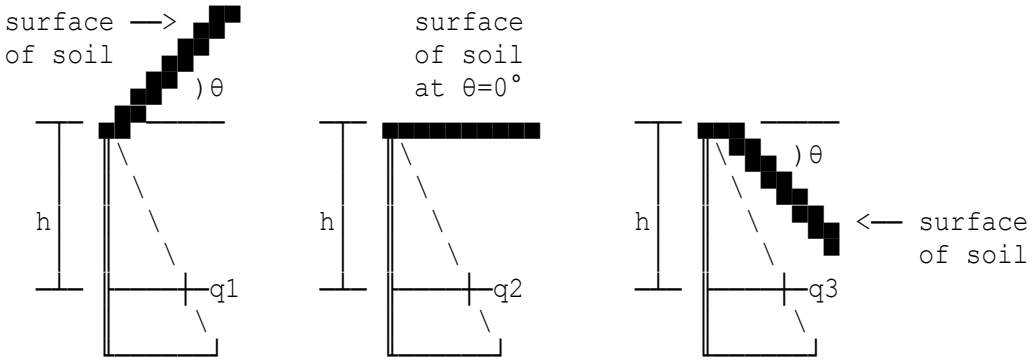

Maximum positive surcharge Level fill Maximum -ve surcharge

With maximum positive surcharge:
Coefficient k1=(COS(theta))^2=0.75
Horizontal pressure at depth h q1=k1*D*h=60 kN/m²

With level fill:
Coefficient k2=(1-SIN(theta))/(1+SIN(theta))
=0.33333
Horizontal pressure at depth h q2=k2*D*h=26.667 kN/m²

With maximum negative surcharge:
Coefficient k3=(COS(theta)/(1+SIN(theta)
*SQR(2)))^2=0.25736
Horizontal pressure at depth h q3=k3*D*h=20.589 kN/m²

Copyright 1986-2024 Fitzroy Systems Ltd.

Location: Pressure from contained granular material

Depth to point considered h=5 m

Pressure acting on inclined surface:

```
      ┌┬ ═══════════════════════════════════════
      │   \ \
      │    \ \     qv              qv = vertical pressure
      │     \s\     |     qn
    h │      \l\    |    /          qn = pressure normal to
      │       \a\   |   /                surface considered
      │        \b\  ▼ ►
      └┴ ──────────\ \•◄──── qh      qh = horizontal pressure
                    \ \
                θ1 ( \ \             gs = weight of inclined
              ────────\ \                 slab per unit area
                       \ \
```

Angle of inclination of surface	Theta1=45°
Weight of inclined slab (if any)	gs=10 kN/m²
Intensities of pressure:	
Vertical	qv=D*h=80 kN/m²
Horizontal	qh=k2*D*h=26.667 kN/m²
Normal to inclined surface	qn=k4*D*h+gs*COS(theta1)=60.404 kN/m²

Location: Pressure from retained cohesive soil

Cohesion factor C=20 kN/m²
Depth to point considered h=5 m
Pressure acting on vertical surface:

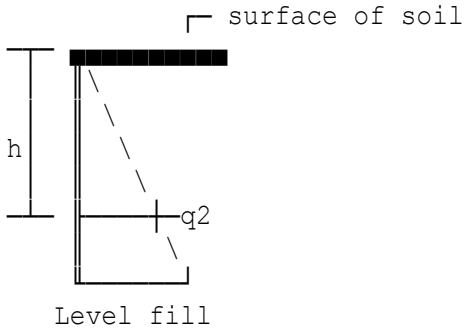

With level fill:
Coefficient k2=(1-SIN(theta))/(1+SIN(theta))
=0.33333
Depth of tension crack z0=2*C/(D*SQR(k2))=4.3301 m
Assuming tension crack is dry:
Horizontal pressure at depth h q2=k2*D*h-2*C*SQR(k2)=3.5727 kN/m²
Assuming tension crack is filled with water:
Horizontal pressure at depth h q2=k2*D*h=26.667 kN/m²
Note that this is less than the horizontal pressure of 42.464 kN/m² acting at the bottom of the tension crack.

Copyright 1986-2024 Fitzroy Systems Ltd.

Location: Pressure from submerged granular material

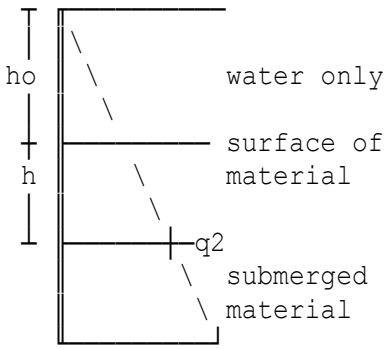

Depth to surface of material	ho=2 m
Extra depth to point considered	h=5 m
Proportion of voids (β)	beta=0.3
Density of material	Dm=D=16 kN/m³
Density of water	Dl=9.81 kN/m³
Factor	alpha=1+k2*(Dm/Dl-(1-beta))=1.3103
Horizontal pressure at depth h	q2=Dl*ho+Dl*alpha*h=83.892 kN/m²

Location: Typical hopper

Bending moments and shearing forces in hopper bottoms

See Reinforced Concrete Designer's Handbook, 10th edition. All loads and pressures are unfactored.

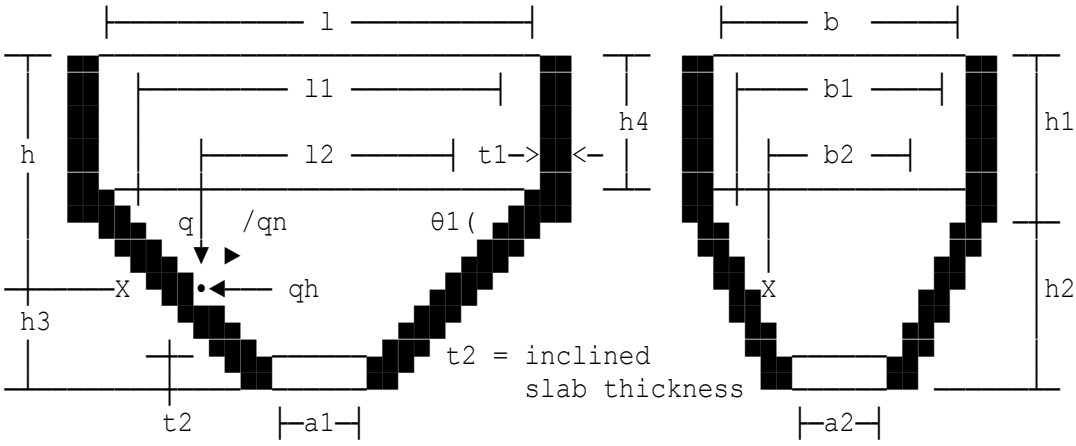

S I D E E L E V A T I O N E N D E L E V A T I O N

where, X = location of mean span and centre of pressure on inclined slab
Since this differs between end and side slabs, dimensions l2, b2, h3 etc. are suffixed 'e' and 's' as appropriate in the following:
Density of contained material D=9 kN/m³
Angle of int.friction of material Theta=25°

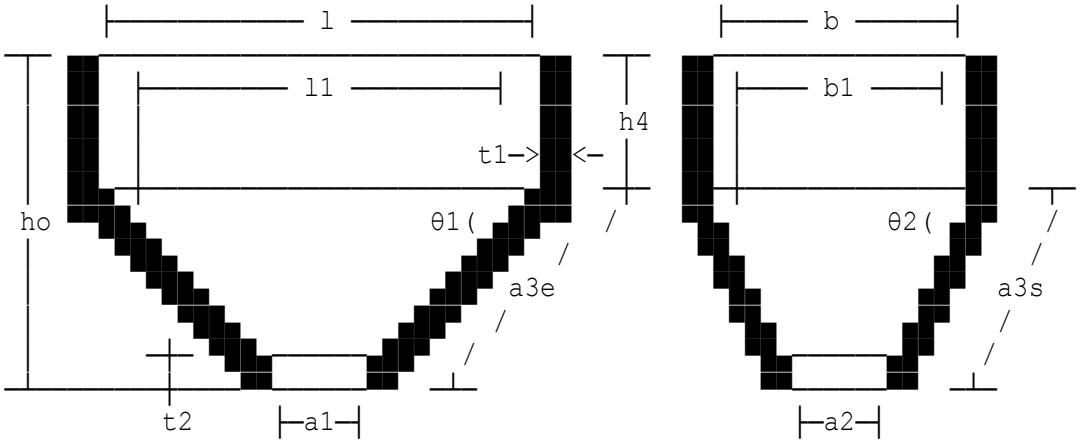

S I D E E L E V A T I O N E N D E L E V A T I O N

Total depth of bunker	ho=h1+h2=6 m
External dim. of side slabs	l1=a1+(l-a1)*h2/(ho-h4)=9.3462 m
External dim. of end slabs	b1=a2+(b-a2)*h2/(ho-h4)=5.6538 m

Moments and forces

In sides:

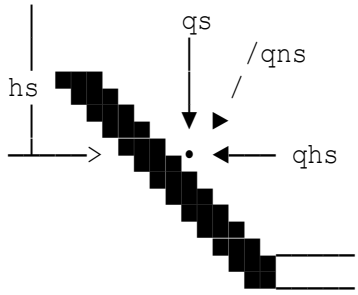

E N D
E L E V A T I O N

Xs = position of centroid of pressure on side panel

Pressures:
qs=D*hs=38.25 kN/m²
qhs=D*hs*(1-SIN(theta))/(1+SIN(theta))=15.524 kN/m²
qns=qhs*(SIN(th2))^2+qs*(COS(th2))^2+24*t2*COS(th2)=30.198 kN/m²

Horizontal moments and forces:
Bending moments in hopper bottom (per metre length of inclined slab)
At midspan Mhsm=qns*SSide^2/32=13.787 kNm
At support Mhss=-Mhsm=-13.787 kNm
Direct tension in hopper bottom (per metre length of inclined slab)
Vhs=qns*l2s*SIN(th2)/2=72.018 kN

Moments and direct forces along slope:
Bending moments in inclined hopper bottom (per metre length)
At mid-height Mvsm=qns*SSide^2/32=13.787 kNm
At top Mvss=-Mvsm=-13.787 kNm
Tension in direction of slope (per metre width of inclined slab)
At mid-height Vvsm=Fxs/(2*SIN(th2)*(l2s+b2s))
=91.157 kN
At slope top Vvss=F/(2*SIN(th2)*(l1+b1))=119.5 kN
Vertical hanging-up force Vs=F/(2*(l1+b1))=93.79 kN

In ends:

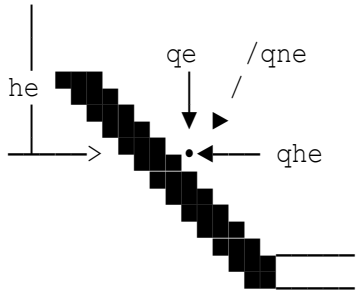

S I D E
E L E V A T I O N

Xe = position of centroid of pressure on end panel

Pressures:
qe=D*he=34.765 kN/m²
qhe=D*he*(1-SIN(theta))/(1+SIN(theta))=14.11 kN/m²
qne=qhe*(SIN(th1))^2+qe*(COS(th1))^2+24*t2*COS(th1)=36.331 kN/m²

Horizontal moments and forces:
Bending moments in hopper bottom (per metre length of inclined slab)
At midspan Mhem=qne*SEnd^2/32=18.131 kNm
At support Mhes=-Mhem=-18.131 kNm
Direct tension in hopper bottom (per metre length of inclined slab)
Vhe=qne*l2e*SIN(th1)/2=71.728 kN

```
Moments and direct forces along slope:
   Bending moments in inclined hopper bottom (per metre length)
      At mid-height              Mvem=qne*SEnd^2/32=18.131 kNm
      At top                     Mves=-Mvem=-18.131 kNm
   Tension in direction of slope (per metre width of inclined slab)
      At mid-height              Vvem=Fxe/(2*SIN(th1)*(l2e+b2e))
                                     =142.77 kN
      At slope top               Vves=F/(2*SIN(th1)*(l1+b1))=168.4 kN
   Vertical hanging-up force     Ve=F/(2*(l1+b1))=93.79 kN
```

Location: Extremely large hopper

Bending moments and shearing forces in hopper bottoms

See Reinforced Concrete Designer's Handbook, 10th edition. All loads and pressures are unfactored.

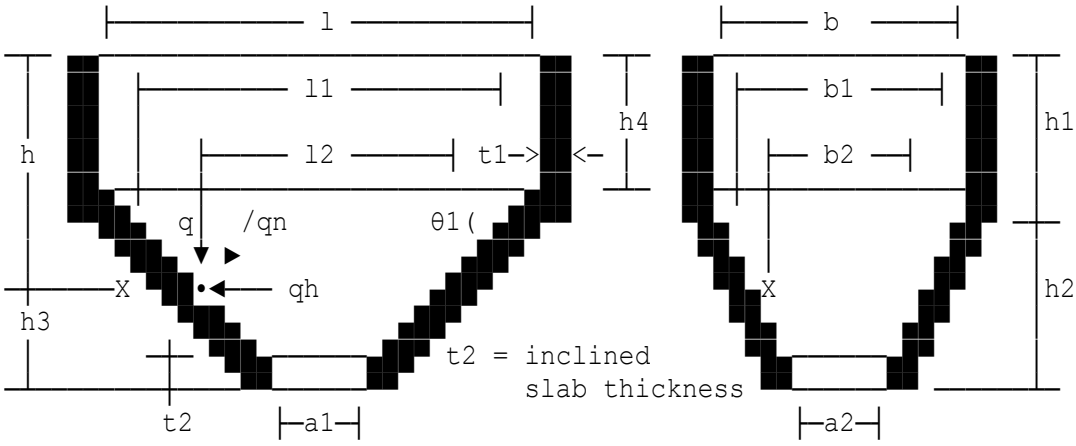

S I D E E L E V A T I O N E N D E L E V A T I O N

where, X = location of mean span and centre of pressure on inclined slab
Since this differs between end and side slabs, dimensions l2, b2, h3 etc. are suffixed 'e' and 's' as appropriate in the following:
Density of contained material D=20 kN/m³
Angle of int.friction of material Theta=10°

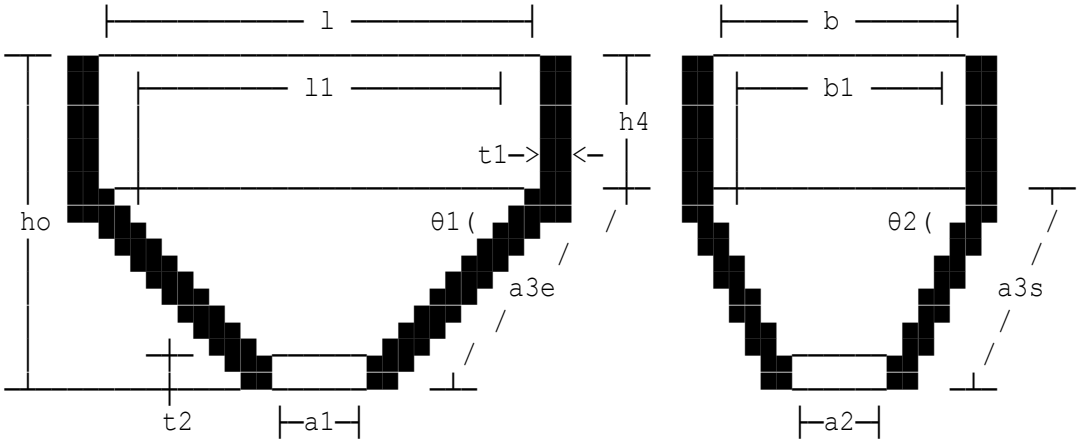

S I D E E L E V A T I O N E N D E L E V A T I O N

Total depth of bunker	ho=h1+h2=20 m
External dim. of side slabs	l1=a1+(l-a1)*h2/(ho-h4)=20 m
External dim. of end slabs	b1=a2+(b-a2)*h2/(ho-h4)=20 m

Moments and forces

In sides:

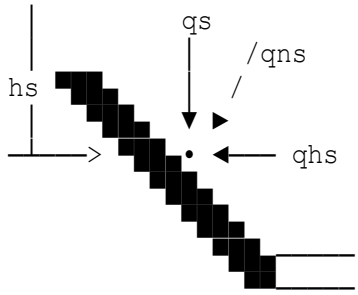

E N D
E L E V A T I O N

Xs = position of centroid
of pressure on side
panel

Pressures:
qs=D*hs=300 kN/m²
qhs=D*hs*(1-SIN(theta))/(1+SIN(theta))=211.23 kN/m²
qns=qhs*(SIN(th2))^2+qs*(COS(th2))^2+24*t2*COS(th2)=243.82 kN/m²

Horizontal moments and forces:
Bending moments in hopper bottom (per metre length of inclined slab)
At midspan Mhsm=qns*SSide^2/32=997.1 kNm
At support Mhss=-Mhsm=-997.1 kNm
Direct tension in hopper bottom (per metre length of inclined slab)
Vhs=qns*l2s*SIN(th2)/2=1598.5 kN

Moments and direct forces along slope:
Bending moments in inclined hopper bottom (per metre length)
At mid-height Mvsm=qns*SSide^2/32=997.1 kNm
At top Mvss=-Mvsm=-997.1 kNm
Tension in direction of slope (per metre width of inclined slab)
At mid-height Vvsm=Fxs/(2*SIN(th2)*(l2s+b2s))
=1741.3 kN
At slope top Vvss=F/(2*SIN(th2)*(l1+b1))=2079.2 kN
Vertical hanging-up force Vs=F/(2*(l1+b1))=1817.5 kN

In ends:

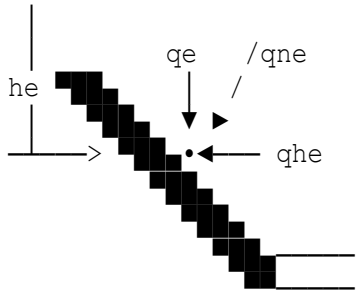

S I D E
E L E V A T I O N

Xe = position of centroid
of pressure on end
panel

Pressures:
qe=D*he=300 kN/m²
qhe=D*he*(1-SIN(theta))/(1+SIN(theta))=211.23 kN/m²
qne=qhe*(SIN(th1))^2+qe*(COS(th1))^2+24*t2*COS(th1)=243.82 kN/m²

Horizontal moments and forces:
Bending moments in hopper bottom (per metre length of inclined slab)
At midspan Mhem=qne*SEnd^2/32=997.1 kNm
At support Mhes=-Mhem=-997.1 kNm
Direct tension in hopper bottom (per metre length of inclined slab)
Vhe=qne*l2e*SIN(th1)/2=1598.5 kN

```
Moments and direct forces along slope:
   Bending moments in inclined hopper bottom (per metre length)
      At mid-height              Mvem=qne*SEnd^2/32=997.1 kNm
      At top                     Mves=-Mvem=-997.1 kNm
   Tension in direction of slope (per metre width of inclined slab)
      At mid-height              Vvem=Fxe/(2*SIN(th1)*(l2e+b2e))
                                     =1741.3 kN
      At slope top               Vves=F/(2*SIN(th1)*(l1+b1))=2079.2 kN
   Vertical hanging-up force     Ve=F/(2*(l1+b1))=1817.5 kN
```

Location: Extremely small hopper

Bending moments and shearing forces in hopper bottoms

See Reinforced Concrete Designer's Handbook, 10th edition. All loads and pressures are unfactored.

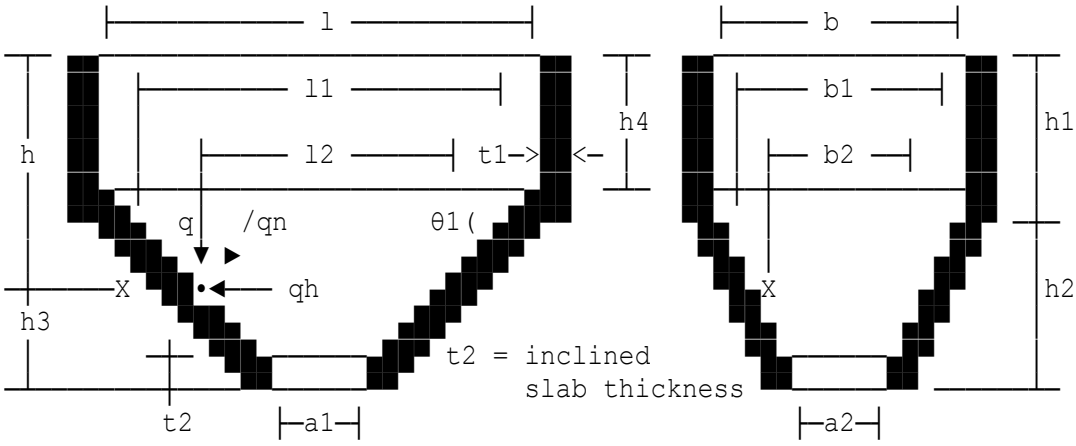

S I D E E L E V A T I O N E N D E L E V A T I O N

where, X = location of mean span and centre of pressure on inclined slab
Since this differs between end and side slabs, dimensions l2, b2, h3 etc. are suffixed 'e' and 's' as appropriate in the following:
Density of contained material D=4 kN/m³
Angle of int.friction of material Theta=10°

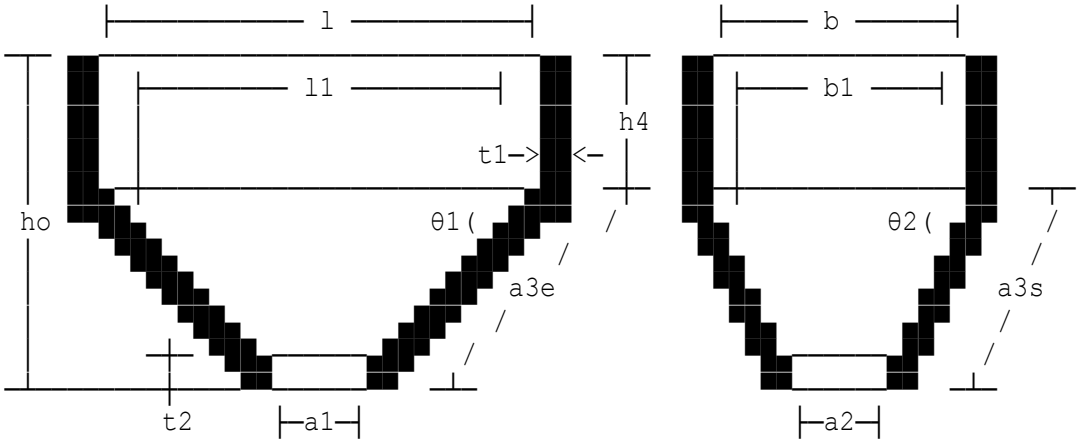

S I D E E L E V A T I O N E N D E L E V A T I O N

Total depth of bunker	ho=h1+h2=2 m
External dim. of side slabs	l1=a1+(l-a1)*h2/(ho-h4)=2 m
External dim. of end slabs	b1=a2+(b-a2)*h2/(ho-h4)=2 m

Moments and forces

In sides:

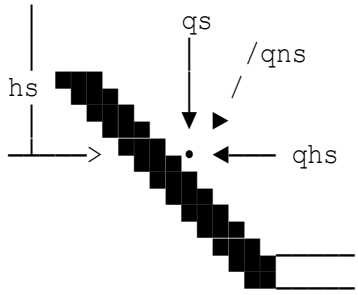

E N D
E L E V A T I O N

Xs = position of centroid of pressure on side panel

Pressures:
  qs=D*hs=5.6 kN/m²
  qhs=D*hs*(1-SIN(theta))/(1+SIN(theta))=3.9429 kN/m²
  qns=qhs*(SIN(th2))^2+qs*(COS(th2))^2+24*t2*COS(th2)=7.317 kN/m²

Horizontal moments and forces:
   Bending moments in hopper bottom (per metre length of inclined slab)
      At midspan Mhsm=qns*SSide^2/32=0.29268 kNm
      At support Mhss=-Mhsm=-0.29268 kNm
   Direct tension in hopper bottom (per metre length of inclined slab)
      Vhs=qns*l2s*SIN(th2)/2=3.4148 kN

Moments and direct forces along slope:
   Bending moments in inclined hopper bottom (per metre length)
      At mid-height Mvsm=qns*SSide^2/32=0.29268 kNm
      At top Mvss=-Mvsm=-0.29268 kNm
   Tension in direction of slope (per metre width of inclined slab)
      At mid-height Vvsm=Fxs/(2*SIN(th2)*(l2s+b2s))
          =6.4361 kN
      At slope top Vvss=F/(2*SIN(th2)*(l1+b1))=8.8375 kN
   Vertical hanging-up force Vs=F/(2*(l1+b1))=6.2491 kN

In ends:

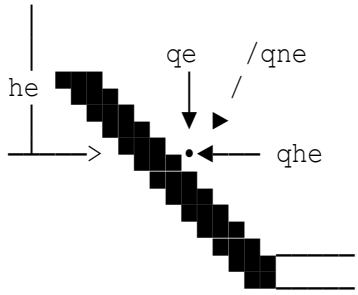

S I D E
E L E V A T I O N

Xe = position of centroid of pressure on end panel

Pressures:
  qe=D*he=5.6 kN/m²
  qhe=D*he*(1-SIN(theta))/(1+SIN(theta))=3.9429 kN/m²
  qne=qhe*(SIN(th1))^2+qe*(COS(th1))^2+24*t2*COS(th1)=7.317 kN/m²

Horizontal moments and forces:
   Bending moments in hopper bottom (per metre length of inclined slab)
      At midspan Mhem=qne*SEnd^2/32=0.29268 kNm
      At support Mhes=-Mhem=-0.29268 kNm
   Direct tension in hopper bottom (per metre length of inclined slab)
      Vhe=qne*l2e*SIN(th1)/2=3.4148 kN

```
Moments and direct forces along slope:
   Bending moments in inclined hopper bottom (per metre length)
      At mid-height              Mvem=qne*SEnd^2/32=0.29268 kNm
      At top                     Mves=-Mvem=-0.29268 kNm
   Tension in direction of slope (per metre width of inclined slab)
      At mid-height              Vvem=Fxe/(2*SIN(th1)*(l2e+b2e))
                                     =6.4361 kN
      At slope top               Vves=F/(2*SIN(th1)*(l1+b1))=8.8375 kN
   Vertical hanging-up force     Ve=F/(2*(l1+b1))=6.2491 kN
```

Location: Typical tank

Analysis of cylindrical containers with wall monolithic with base

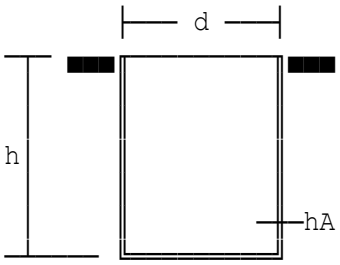

Analyses based on coefficients by
(a) Dr Reissner published in 'Reinforced Concrete Designer's Handbook' 10th Edition, Table 184.
(b) Dr J.E.Gibson in 'Thin Shells Computing and Theory'.

Elastic modulus of wall material	E=25E6 kN/m²
Diameter of tank	d=6 m
Depth of tank and liquid	h=10 m
Thickness of tank wall at base	hA=0.25 m
Density of contained liquid	Dl=9.807 kN/m³
Poisson's ratio for concrete	nu=0.2
No.of vert.intervals considered	n=10

Analysis using Reissner coefficients

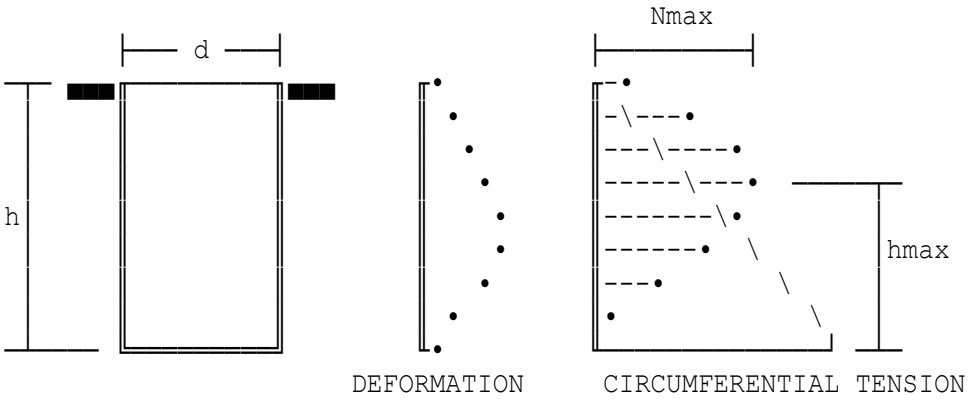

where, Nmax is the maximum circumferential tension and hmax is the height of maximum circumferential tension.

Vert.bending moment at wall base	MA=K1*Dl*h^3
	=20.23 kNm/m of circumference.
Height of maximum circum.tension	hmax=K2*h=1.739 m
Maximum circumferential tension	Nmax=K3*Dl*h*d/2
	=251.57 kN/m of height.

Analysis using Gibson formulae

Basic coefficient beta=(3*(1-nu^2)/(d^2/4*hA^2))^.25
=1.5042

Values of deflection, force and moment are then found by solving the equations below at the required heights x above the base:

Radial deflection=-1000*Dl*(d/2)^2*h*(1-x/h-A-B*(1-1/(β*h)))/(E*hA) mm
Vertical shear =Dl*h*(-2*A+(A+B)/(β*h))/(2*β) kN/m
Ring tension =Dl*d/2*h*(1-x/h-A-B*(1-1/(β*h))) kN/m
Vertical moment =Dl*h*(A*(1-1/(β*h))-B)/(2*β^2) kNm/m
Horizontal moment=Mx*nu kNm/m

Height (m)	Radial deflection (mm)	Vertical shear (kN/m)	Ring tension (kN/m)	Vertical moment (kNm/m)	Horizontal moment (kNm/m)
10		0	0	0	0
9	-0	0	29.42	0	0
8	-0	0	58.841	0	0
7	-0	1E-3	88.273	0	0
6	-0	0.007	117.7	-0.003	-1E-3
5	-0	-0.01	146.91	-0.008	-0.002
4	-0	-0.15	176.01	0.061	0.012
3	-0	0.114	209.54	0.189	0.038
2	-0	3.098	247.96	-1.132	-0.226
1	-0	-0.451	199.55	-4.505	-0.901
0		-63.029	0	20.23	4.046

NOTE: All values in table are unfactored.

Location: Shallow tank with very large diameter

Analysis of cylindrical containers with wall monolithic with base

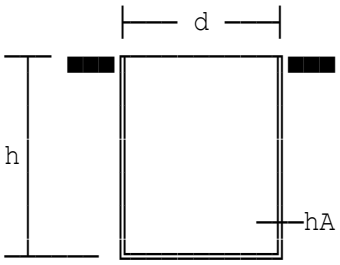

Analyses based on coefficients by
(a) Dr Reissner published in 'Reinforced Concrete Designer's Handbook' 10th Edition, Table 184.
(b) Dr J.E.Gibson in 'Thin Shells Computing and Theory'.

Elastic modulus of wall material	E=15E6 kN/m²
Diameter of tank	d=20 m
Depth of tank and liquid	h=2 m
Thickness of tank wall at base	hA=0.3 m
Density of contained liquid	Dl=9.807 kN/m³
Poisson's ratio for concrete	nu=0.3
No.of vert.intervals considered	n=15

Analysis using Reissner coefficients

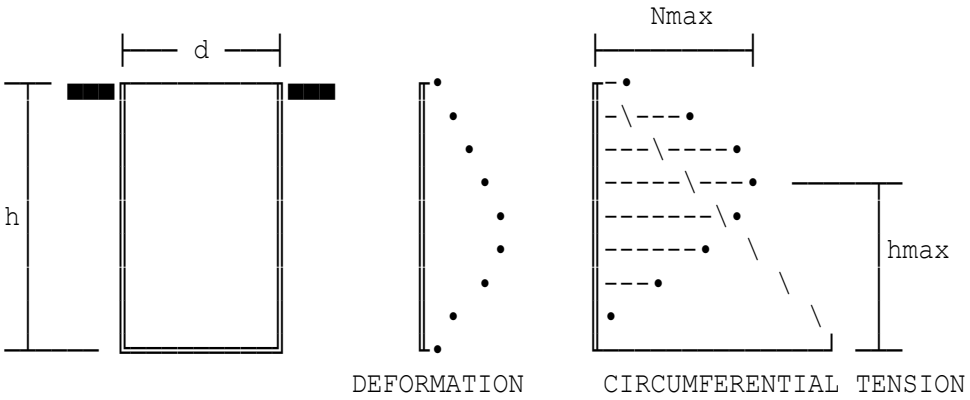

where, Nmax is the maximum circumferential tension and hmax is the height of maximum circumferential tension.

Vert.bending moment at wall base	MA=K1*Dl*h^3
	=5.8096 kNm/m of circumference.
Height of maximum circum.tension	hmax=K2*h=0.965 m
Maximum circumferential tension	Nmax=K3*Dl*h*d/2
	=8.6798 kN/m of height.

Analysis using Gibson formulae

Basic coefficient beta=(3*(1-nu^2)/(d^2/4*hA^2))^.25
=0.74213

Values of deflection, force and moment are then found by solving the equations below at the required heights x above the base:

Radial deflection=-1000*Dl*(d/2)^2*h*(1-x/h-A-B*(1-1/(β*h)))/(E*hA) mm
Vertical shear =Dl*h*(-2*A+(A+B)/(β*h))/(2*β) kN/m
Ring tension =Dl*d/2*h*(1-x/h-A-B*(1-1/(β*h))) kN/m
Vertical moment =Dl*h*(A*(1-1/(β*h))-B)/(2*β^2) kNm/m
Horizontal moment=Mx*nu kNm/m

Height (m)	Radial deflection (mm)	Vertical shear (kN/m)	Ring tension (kN/m)	Vertical moment (kNm/m)	Horizontal moment (kNm/m)
2	0	1.667	-18.294	-3.907	-1.172
1.8667	0	1.381	-11.716	-4.111	-1.233
1.7333	0	1.002	-6.024	-4.271	-1.281
1.6	0	0.519	-1.252	-4.374	-1.312
1.4667	-0	-0.082	2.577	-4.405	-1.322
1.3333	-0	-0.811	5.458	-4.347	-1.304
1.2	-0	-1.684	7.404	-4.182	-1.255
1.0667	-0	-2.71	8.449	-3.891	-1.167
0.93333	-0	-3.903	8.658	-3.452	-1.036
0.8	-0	-5.272	8.126	-2.842	-0.853
0.66667	-0	-6.827	6.984	-2.038	-0.611
0.53333	-0	-8.575	5.406	-1.013	-0.304
0.4	-0	-10.52	3.614	0.258	0.077
0.26667	-0	-12.662	1.883	1.801	0.54
0.13333	-	-15.001	0.546	3.643	1.093
0		-17.526	0	5.81	1.743

NOTE: All values in table are unfactored.

Location: Tall, small diameter tank containing light liquid

Analysis of cylindrical containers with wall monolithic with base

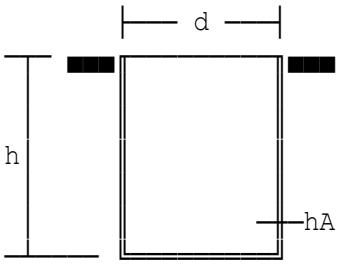

Analyses based on coefficients by
(a) Dr Reissner published in 'Reinforced Concrete Designer's Handbook' 10th Edition, Table 184.
(b) Dr J.E.Gibson in 'Thin Shells Computing and Theory'.

Elastic modulus of wall material	E=40E6 kN/m²
Diameter of tank	d=3 m
Depth of tank and liquid	h=20 m
Thickness of tank wall at base	hA=1 m
Density of contained liquid	Dl=8 kN/m³
Poisson's ratio for concrete	nu=0.15
No.of vert.intervals considered	n=20

Analysis using Reissner coefficients

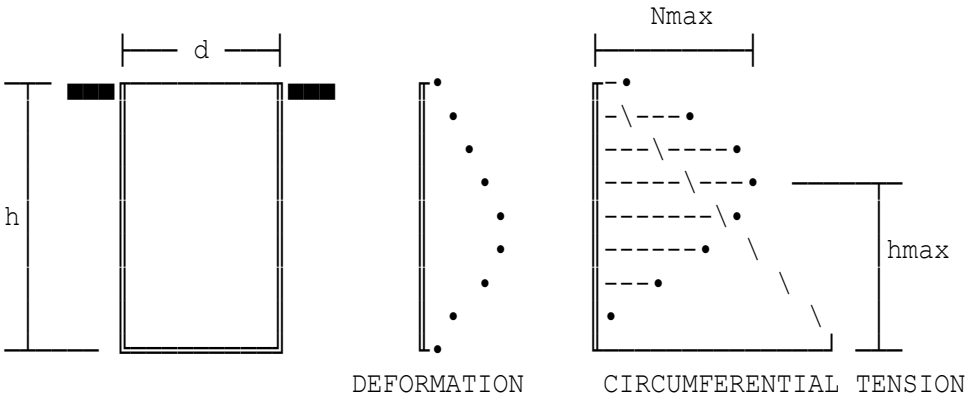

where, Nmax is the maximum circumferential tension and hmax is the height of maximum circumferential tension.

Vert.bending moment at wall base	MA=K1*Dl*h^3
	=66.796 kNm/m of circumference.
Height of maximum circum.tension	hmax=K2*h=2.562 m
Maximum circumferential tension	Nmax=K3*Dl*h*d/2
	=217.72 kN/m of height.

Analysis using Gibson formulae

Basic coefficient beta=(3*(1-nu^2)/(d^2/4*hA^2))^.25
=1.0685

Values of deflection, force and moment are then found by solving the equations below at the required heights x above the base:

Radial deflection=-1000*Dl*(d/2)^2*h*(1-x/h-A-B*(1-1/(β*h)))/(E*hA) mm
Vertical shear =Dl*h*(-2*A+(A+B)/(β*h))/(2*β) kN/m
Ring tension =Dl*d/2*h*(1-x/h-A-B*(1-1/(β*h))) kN/m
Vertical moment =Dl*h*(A*(1-1/(β*h))-B)/(2*β^2) kNm/m
Horizontal moment=Mx*nu kNm/m

Height (m)	Radial deflection (mm)	Vertical shear (kN/m)	Ring tension (kN/m)	Vertical moment (kNm/m)	Horizontal moment (kNm/m)
20		0	0	0	0
19		0	12	0	0
18	-	0	24	0	0
17	-	0	36	0	0
16	-0	0	48	0	0
15	-0	0	60	0	0
14	-0	0	72	0	0
13	-0	0	84	0	0
12	-0	0	95.999	0	0
11	-0	-1E-3	108	1E-3	0
10	-0	1E-3	120.01	1E-3	0
9	-0	0.01	132.02	-0.003	0
8	-0	0.019	144	-0.019	-0.003
7	-0	-0.028	155.83	-0.023	-0.003
6	-0	-0.238	167.56	0.094	0.014
5	-0	-0.426	180.21	0.459	0.069
4	-0	0.821	196.3	0.489	0.073
3	-0	5.908	214.3	-2.521	-0.378
2	-0	9.606	208.41	-11.208	-1.681
1	-0	-23.133	119.42	-10.051	-1.508
0		-146.24	0	66.796	10.019

NOTE: All values in table are unfactored.

Location: Footing for south elevation

Eaves level

Roof area carried by 1 m of wall	a(3)=4 m²
DL of pitched roof on plan	Ff(3)=1.5 kN/m²
Dead load attic floor	DL(3)=0.7 kN/m²
Edge load (upstand etc)	E(3)=0.5 kN/m
LL excluded from reductions	LE(3)=2 kN/m²
Live load not so excluded on plan	LL(3)=3 kN/m²

Floor level 2

Floor area carried by 1 m of wall	a(2)=4 m²
Floor finishes	Ff(2)=0.2 kN/m²
Dead load of floor	DL(2)=1 kN/m²
Loading from external wall	E(2)=10.8 kN/m
LL excluded from reductions	LE(2)=2 kN/m²
Live load not so excluded on plan	LL(2)=5 kN/m²

Floor level 1

Floor area carried by 1 m of wall	a(1)=4 m²
Floor finishes	Ff(1)=0.2 kN/m²
Dead load of floor	DL(1)=1 kN/m²
Loading from external wall	E(1)=10.8 kN/m
LL excluded from reductions	LE(1)=2 kN/m²
Live load not so excluded on plan	LL(1)=5 kN/m²

Wall loading table

Loads from floors shown at floor levels, load at top of wall shown between floors. Reduced imposed loads contain reduction factors given in Table 2 of BS6399, but note that IStructE Green Book advises that these reduction factors should not be taken advantage of in the initial design except when assessing the load on the foundation.

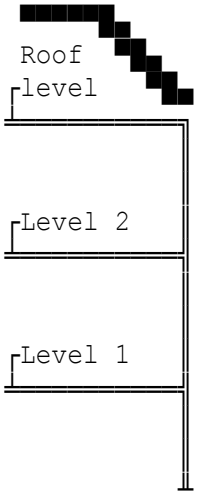

	Characteristic loads			Factored loads		
	Dead (kN)	Live (kN)	Reduced live	Dead (kN)	Live (kN)	Reduced live
	9.3	20		13.02	32	
	9.3	20	20	13.02	32	32
Level 2	15.6	28		21.84	44.8	
	24.9	48	44.8	34.86	76.8	71.68
Level 1	15.6	28		21.84	44.8	
	40.5	76	65.6	56.7	121.6	104.96

Location: Footing for south elevation

Eaves level

Roof area carried by 1 m of wall	a(3)=4 m²
Perm load of pitched roof on plan	Ff(3)=1.5 kN/m²
Permanent load attic floor	DL(3)=0.7 kN/m²
Edge load (upstand etc.)	E(3)=0.5 kN/m
IL excluded from reductions	LE(3)=2 kN/m²
IL not so excluded on plan	LL(3)=3 kN/m²

Floor level 2

Floor area carried by 1 m of wall	a(2)=4 m²
Floor finishes	Ff(2)=0.2 kN/m²
Permanent load of floor	DL(2)=1 kN/m²
Loading from external wall	E(2)=10.8 kN/m
IL excluded from reductions	LE(2)=2 kN/m²
IL not so excluded on plan	LL(2)=5 kN/m²

Floor level 1

Floor area carried by 1 m of wall	a(1)=4 m²
Floor finishes	Ff(1)=0.2 kN/m²
Permanent load of floor	DL(1)=1 kN/m²
Loading from external wall	E(1)=10.8 kN/m
IL excluded from reductions	LE(1)=2 kN/m²
IL not so excluded on plan	LL(1)=5 kN/m²

Wall loading table

Loads from floors shown at floor levels, load at top of wall shown between floors. Reduced imposed loads contain reduction factors given in EC1 Part 1-1, but note that IStructE advises that these reduction factors should not be taken advantage of in the initial design except when assessing the load on the foundation.

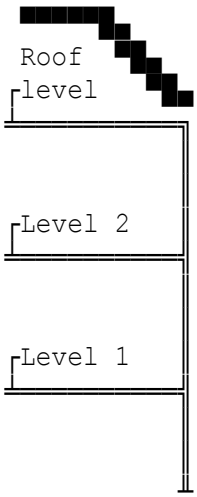

	Characteristic loads			Factored loads		
	Permnt (kN)	Imposed (kN)	Reduced imposed	Permnt (kN)	Imposed (kN)	Reduced imposed
	9.3	20		12.555	30	
	9.3	20	20	12.555	30	30
	15.6	28		21.06	42	
	24.9	48	44.8	33.615	72	67.2
	15.6	28		21.06	42	
	40.5	76	65.6	54.675	114	98.4

Copyright 1986-2024 Fitzroy Systems Ltd.

Location: Grid reference A1 & all other internal columns

Roof level

Roof area carried by column	a(3)=24 m²
Roof finishes	Ff(3)=2.2 kN/m²
Ceiling & service load beneath	Cs(3)=0.5 kN/m²
Dead load of roof	DL(3)=7.2 kN/m²
Parapet load	E(3)=8.5 kN/m
Length of parapet carried	L(3)=6 m
Additional dead load incl column	DLa(3)=0 kN
LL excluded from reductions	LE(3)=2 kN/m²
Live load not so excluded	LL(3)=3 kN/m²

Floor level 2

Floor area carried by column	a(2)=24 m²
Floor finishes	Ff(2)=1.8 kN/m²
Ceiling & service load	Cs(2)=0.5 kN/m²
Dead load of floor	DL(2)=6.6 kN/m²
Loading from external envelope	E(2)=10.8 kN/m
Length of envelope carried	L(2)=6 m
Additional dead load incl column	DLa(2)=7.8 kN
LL excluded from reductions	LE(2)=2 kN/m²
Live load not so excluded	LL(2)=5 kN/m²

Floor level 1

Floor area carried by column	a(1)=24 m²
Floor finishes	Ff(1)=1.8 kN/m²
Ceiling & service load	Cs(1)=0.5 kN/m²
Dead load of floor	DL(1)=6.6 kN/m²
Loading from external envelope	E(1)=10.8 kN/m
Length of envelope carried	L(1)=6 m
Additional dead load incl column	DLa(1)=7.8 kN
LL excluded from reductions	LE(1)=2 kN/m²
Live load not so excluded	LL(1)=5 kN/m²

Column loading table

Loads from floors shown at floor levels, column loads shown between. Reduced imposed loads contain reduction factors given in Table 2 of BS6399, but note that IStructE Green Book advises that these reduction factors should not be taken advantage of in the initial design except when assessing the load on the foundation.

	Characteristic loads			Factored loads		
	Dead (kN)	Imposed (kN)	Reduced imposed	Dead (kN)	Imposed (kN)	Reduced imposed
Roof level	288.6	120		404.04	192	
	288.6	120	120	404.04	192	192
Level 2	286.2	168		400.68	268.8	
	574.8	288	268.8	804.72	460.8	430.08
Level 1	286.2	168		400.68	268.8	
	861	456	393.6	1205.4	729.6	629.76

Copyright 1986-2024 Fitzroy Systems Ltd.

Location: Grid reference A1 & all other internal columns

Roof level

Roof area carried by column	a(3)=24 m²
Roof finishes	Ff(3)=2.2 kN/m²
Ceiling & service load beneath	Cs(3)=0.5 kN/m²
Permanent load of roof	DL(3)=7.2 kN/m²
Parapet load	E(3)=8.5 kN/m
Length of parapet carried	L(3)=6 m
Additional permanent ld incl col.	DLa(3)=0 kN
IL excluded from reductions	LE(3)=2 kN/m²
Imposed load not so excluded	LL(3)=3 kN/m²

Floor level 2

Floor area carried by column	a(2)=24 m²
Floor finishes	Ff(2)=1.8 kN/m²
Ceiling & service load	Cs(2)=0.5 kN/m²
Permanent load of floor	DL(2)=6.6 kN/m²
Loading from external envelope	E(2)=10.8 kN/m
Length of envelope carried	L(2)=6 m
Additional permanent ld incl col.	DLa(2)=7.8 kN
IL excluded from reductions	LE(2)=2 kN/m²
Imposed load not so excluded	LL(2)=5 kN/m²

Floor level 1

Floor area carried by column	a(1)=24 m²
Floor finishes	Ff(1)=1.8 kN/m²
Ceiling & service load	Cs(1)=0.5 kN/m²
Permanent load of floor	DL(1)=6.6 kN/m²
Loading from external envelope	E(1)=10.8 kN/m
Length of envelope carried	L(1)=6 m
Additional permanent ld incl col.	DLa(1)=7.8 kN
IL excluded from reductions	LE(1)=2 kN/m²
Imposed load not so excluded	LL(1)=5 kN/m²

Copyright 1986-2024 Fitzroy Systems Ltd.

Column loading table

Loads from floors shown at floor levels, column loads shown between. Reduced imposed loads contain reduction factors given in EC1 Part 1-1, but note that IStructE advises that these reduction factors should not be taken advantage of in the initial design except when assessing the load on the foundation.

	Characteristic loads			Factored loads		
	Permnt (kN)	Imposed (kN)	Reduced imposed	Permnt (kN)	Imposed (kN)	Reduced imposed
Roof level	288.6	120		389.61	180	
	288.6	120	120	389.61	180	180
Level 2	286.2	168		386.37	252	
	574.8	288	268.8	775.98	432	403.2
Level 1	286.2	168		386.37	252	
	861	456	393.6	1162.4	684	590.4

Location: The House

Unit loads for elements of structure

Sloping roofs with angle of 30 degrees

Serviceability loads

Dead load on plan for sloping member = Load / Cos roof angle

Rafters 50 mm x 100 mm at 400 mm c/c

Loads in kN/m²

Loads	**On horizontal**	**On slope**
Rafters	0.0694	0.0601
Felt load	0.017	0.0147
Batten load	0.0385	0.0333
Tile/slate load	0.7188	0.6225
Sub total for dead load (Gk)	0.9488 kN/m²	
Live load on horizontal (Qk)	0.75 kN/m²	
Total load (Gk+Qk)	1.699 kN/m²	
Ultimate dead load (Factor 1.4)	1.328 kN/m²	
Ultimate live load (Factor 1.6)	1.2 kN/m²	

Loading with plaster/plasterboard for roofs with angle of 30°

Serviceability loads

Loads	**On horizontal**	**On slope**
Dead load from above	0.9488 kN/m²	
Plaster/board load	0.2491 kN/m²	0.2157 kN/m²
Allowance for insulation etc.	0.1155 kN/m²	0.1 kN/m²
Sub total for dead load (Gk)	1.313 kN/m²	
Live load on horizontal (Qk)	0.75 kN/m²	
Total Gk+Qk with plaster/board	2.063 kN/m²	
Ultimate dead load (Factor 1.4)	1.839 kN/m²	
Ultimate live load (Factor 1.6)	1.2 kN/m²	

Location: The House

Unit loads for elements of structure

Sloping roofs with angle of 30 degrees

Serviceability loads

Permanent load on plan for sloping member = Load / Cos roof angle

Rafters 50 mm x 100 mm at 400 mm c/c

	Loads in kN/m²	
Loads	**On horizontal**	**On slope**
Rafters	0.0694	0.0601
Boarding load	0.0951	0.0824
Felt load	0.017	0.0147
Counterbatten load	0.01	0.0087
Batten load	0.0385	0.0333
Tile/slate load	0.7188	0.6225
Subtotal for permant load (Gk)	0.9488 kN/m²	
Total load (Gk+Qk)	1.699 kN/m²	
Ult permanent load (Factor 1.35)	1.281 kN/m²	
Ult imposed load (Factor 1.5)	1.125 kN/m²	

Loading with plaster/plasterboard for roofs with angle of 30°

Serviceability loads

Loads	**On horizontal**	**On slope**
Permanent load from above	0.9488 kN/m²	
Plaster/board load	0.2491 kN/m²	0.2157 kN/m²
Allowance for insulation etc.	0.1155 kN/m²	0.1 kN/m²
Subtotal for permanent load (Gk)	1.313 kN/m²	
Imposed load on horizontal (Qk)	0.75 kN/m²	
Total Gk+Qk with plaster/board	2.063 kN/m²	
Ult permanent load (Factor 1.35)	1.773 kN/m²	
Ult imposed load (Factor 1.5)	1.125 kN/m²	

Location: Inner leaf lintel above front door

```
          .
         / \
        /   \
       /     \ Interaction
      /       \ zone
     /    .    \
    /    / \    \
   /   /     \   \
  /  /   Load  \  \
 / /   triangle  \ \
//                 \\
┓                  ┏

 <────────Lc──────>
<────────1.1 Lc──────>
```

Domestic lintel

Calculations in accordance with BS5977-1:1981.

For selection of lintels using published load-span tables, it may be convenient to convert triangular loads and part span loads to equivalent uniformly distributed loads over the whole span. However this may not give correct shear forces and the calculated BM may occur at a point other than mid-span.

NOTE: Load triangle sides are at 45° to the horizontal and Interaction zone triangle sides are at 60° to the horizontal.

Clear span of lintel	Lc=1.8 m
Unfactored masonry load	Wm=2.1 kN/m²
Floor/roof loading	Wrf=4.8 kN/m
Height above lintel	Hrf=0.65 m
Partition loading	Wp=3.6 kN

SUMMARY OF LOADINGS

	Equivalent udl values
Masonry	**1.3825 kN/m**
Floor/roof	**2.6408 kN/m**
Partition	**3.5009 kN/m**
Self weight	**0.36 kN/m**
Total (unfactored)	**7.8842 kN/m**

Location: Inner leaf lintel above front door

```
          .
         / \
        /   \
       /     \ Interaction
      /       \ zone
     /    .    \
    /    / \    \
   /   /     \   \
  /  /   Load  \  \
 / /   triangle  \ \
//                 \\
```

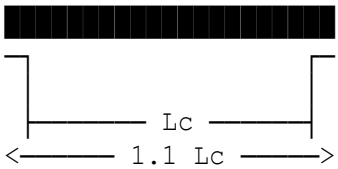

Domestic lintel

Calculations are in accordance with the EC6 Manual by IStructE, PD 6697:2010 and BS5977-1:1981.

For selection of lintels using published load-span tables, it may be convenient to convert triangular loads and part span loads to equivalent uniformly distributed loads over the whole span. However this may not give correct shear forces and the calculated BM may occur at a point other than mid-span.

NOTE: Load triangle sides are at 45° to the horizontal and Interaction zone triangle sides are at 60° to the horizontal.

Clear span of lintel	Lc=1.8 m
Unfactored masonry load	Wm=2.1 kN/m²
Floor/roof loading	Wrf=4.8 kN/m
Height above lintel	Hrf=0.65 m
Partition loading	Wp=3.6 kN

SUMMARY OF LOADINGS

Equivalent udl values	
Masonry	**1.3825 kN/m**
Floor/roof	**2.6408 kN/m**
Partition	**3.5009 kN/m**
Self weight	**0.36 kN/m**
Total (unfactored)	**7.8842 kN/m**

Location: New building for The National Lottery

Unit loads for roof elements of structure

Portal frame roof with angle of 10°

Serviceability loads

Load on horizontal = Load on slope / Cos(roof angle)

Frame details: 30 m span x 6 m centres

	Loads in kN/m²	
Loads	**On horizontal**	**On slope**
Sheeting and insulation	0.073	0.072
Allowance for services etc.	0.071	0.07
Subtotal for dead load (Gk)	0.489	0.482
Live load on horizontal (Qk)	ll(1)=0.75 kN/m²	

Total factored horizontal load 1.89 kN/m²
Total factored load on slope 1.86 kN/m²

Wind loading

Description of wind load: Windward side of roof
Wind Load w(1)=-0.5 kN/m²
Wind load factored by (1.2) -0.6 kN/m²

Total factored load on slope 0.865 kN/m²

Location: New building for The National Lottery

Unit loads for roof elements of structure

Portal frame roof with angle θ=10°

Serviceability loads

Load on plan (for sloping member) = Load on slope / Cos θ

Frame details: 30 m span x 6 m centres

	Loads in kN/m²	
Loads	**On plan**	**On slope**
Sheeting and insulation	0.073	0.072
Frame	0.294	0.29
Allowance for services etc.	0.071	0.07
Subtotal for permanent load (Gk)	0.489	0.482
Imposed load on plan (Qk)	ll(1)=0.75 kN/m²	
Imposed load on slope (Qk)	lls(1)=0.739 kN/m²	

Total factored load (on plan) 1.79 kN/m²
Total factored load (on slope) 1.76 kN/m²

Wind loading

Description of wind load: Windward side of roof
Wind Load w(1)=-0.5 kN/m²
Wind load (factored by 0.75) -0.375 kN/m²

Total factored load (on slope) 1.38 kN/m²

Location: Beam ref B1

Steel beam with welded bottom flange plate

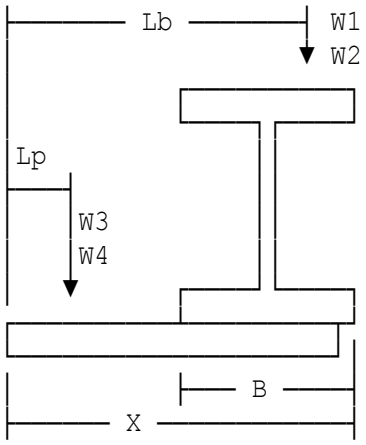

Find centroid of loads taking moments about front edge of flange plate. The eccentricity of total load relative to beam centre line will be calculated.

Width of beam section	B=166.8 mm
Total section width	X=290 mm
Flange load position	Lp=41.5 mm
Beam load position	Lb=240 mm

Loadings - unfactored

On flange plate:	Dead load	W3=8 kN
	Imposed load	W4=3 kN
On beam:	Dead load	W1=14.5 kN
	Imposed Load	W2=11 kN

Partial load factors

Dead load factor	gamd=1.4
Imposed load factor	gami=1.6

Load case - unfactored

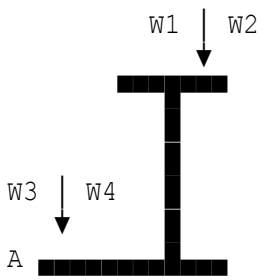

(-ve ecc is to rhs of beam centre line)

Flange moment	Mp=(W3+W4)*Lp/10^3=0.4565 kNm
Beam moment	Mb=(W1+W2)*Lb/10^3=6.12 kNm
Factored loading	Wf=gamd*(W3+W1)+gami*(W4+W2)=53.9 kN
Total moment	M=Mp+Mb=6.5765 kNm

SUMMARY OF	**Factored loading**	**53.9 kN**
DESIGN PARAMETERS	**Load Eccentricity**	**26.422 mm**
FOR TORSION	**Partial safety factor**	**1.4767**

Location: Beam ref B1

Steel beam with welded bottom flange plate

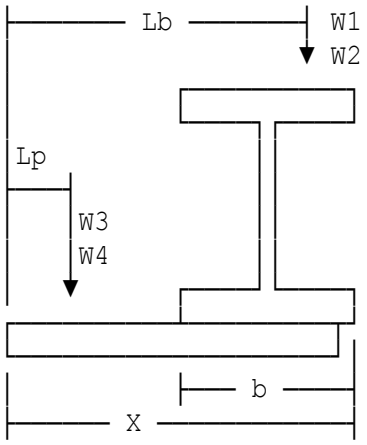

Find centroid of loads taking moments about front edge of flange plate. The eccentricity of total load relative to beam centre line will be calculated.

Width of beam section	b=166.8 mm
Total section width	X=290 mm
Flange load position	Lp=41.5 mm
Beam load position	Lb=240 mm

Loadings - unfactored

On flange plate:	Permnt load	W3=8 kN
	Imposed load	W4=3 kN
On beam:	Permnt load	W1=14.5 kN
	Imposed load	W2=11 kN

Partial load factors

Permanent load factor	gamG=1.35
Imposed load factor	gamQ=1.5

Load case - unfactored

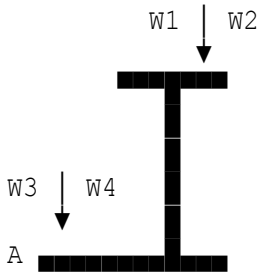

(-ve ecc is to rhs of beam centre line)

Flange moment	Mp=(W3+W4)*Lp/10^3=0.4565 kNm
Beam moment	Mb=(W1+W2)*Lb/10^3=6.12 kNm
Factored loading	Wf=gamG*(W3+W1)+gamQ*(W4+W2)=51.375 kN
Total moment	MEd=Mp+Mb=6.5765 kNm

SUMMARY OF	**Factored loading**	**51.375 kN**
DESIGN PARAMETERS	**Load Eccentricity**	**26.422 mm**
FOR TORSION	**Partial safety factor**	**1.4075**

Location: I section beam - Mark 12a

Density	d=77 kN/m³
Part description	Flanges
Length	l(1)=10 m
Cross sectional area	a(1)=0.030781 m²
Volume of part	v=l(i)*a(i)=0.30781 m³
Weight of part	w=v*d=23.701 kN
Part description	Web
Length	l(2)=10 m
Cross sectional area	a(2)=0.018217 m²
Volume of part	v=l(i)*a(i)=0.18217 m³
Weight of part	w=v*d=14.027 kN

Totals for item:

Volume of item	0.48998 m³
Weight of item	37.728 kN

Location: First floor beams

Loading on elements of structure

Element name - Mark 12B

Factored load combination chosen 1.4Gk + 1.6Qk

Uniformly distributed load

Description of dead load:	self weight
Dead load	D(1)=15.2 kN/m
Dead load factored by 1.4	21.28 kN/m
Description of live load:	Load from above
Imposed load	L(1)=25 kN/m
Live load factored by 1.6	40 kN/m
Total unfactored load	40.2 kN/m
Total factored load	61.28 kN/m

Element name - Mark 12B

Factored load combination chosen 0.9Gk + 1.6Qk

Point load

Description of dead load:	Tank self weight
Dead load	D(2)=15.2 kN
Dead load factored by 0.9	13.68 kN
Description of live load:	Tank contents
Imposed load	L(2)=25 kN
Live load factored by 1.6	40 kN
Total unfactored load	40.2 kN
Total factored load	53.68 kN

Location: Example 1 Three span beam using EC0 expression 6.10

Partial safety factors ULS

Permanent actions (unfavourable) gamG=1.35
Permanent actions (favourable) gamG=1.0
Variable actions factor gamQ=1.5

ULS load combinations using EC0 expression 6.10

Comb	Span AB	Span BC	Span CD
1	1.35Gk	1.35Gk+1.5Qk	1.35Gk
2	1.0Gk+1.5Qk	1.0Gk	1.0Gk+1.5Qk
3	1.35Gk+1.5Qk	1.35Gk	1.35Gk+1.5Qk
4	1.0Gk	1.0Gk+1.5Qk	1.0Gk
5	1.35Gk+1.5Qk	1.35Gk+1.5Qk	1.35Gk
6	1.35Gk	1.35Gk+1.5Qk	1.35Gk+1.5Qk
7	1.35Gk+1.5Qk	1.35Gk+1.5Qk	1.35Gk+1.5Qk

SLS load combinations using EC0 expression 6.10

Comb	Span AB	Span BC	Span CD
8	1.0Gk	1.0Gk+1.0Qk	1.0Gk
9	1.0Gk+1.0Qk	1.0Gk	1.0Gk+1.0Qk

Characteristic loads on beam

Char permanent load on span AB Gk1=25 kN/m
Char permanent load on span BC Gk2=25 kN/m
Char permanent load on span CD Gk3=25 kN/m
Char variable load on span AB Qk1=10 kN/m
Char variable load on span BC Qk2=10 kN/m
Char variable load on span CD Qk3=10 kN/m

ULS load combination values

Comb	Load on span AB (kN/m)	Load on span BC (kN/m)	Load on span CD (kN/m)
1	33.75	48.75	33.75
2	40	25	40
3	48.75	33.75	48.75
4	25	40	25
5	48.75	48.75	33.75
6	33.75	48.75	48.75
7	48.75	48.75	48.75

SLS load combination values

Comb	Span AB	Span BC	Span CD
8	25	35	25
9	35	25	35

Location: Ex 2 Three span beam using EC0 expressions 6.10a & 6.10b

Partial safety factors ULS

Permanent actions (unfavourable) gamG=1.35 (expression 6.10a)
Permanent actions (unfavourable) gamG=1.25 (expression 6.10b)
Permanent actions (favourable) gamG=1.0
Variable actions factor gamQ=1.5
Factor Ψo for variable load psi0=0.7

ULS load combinations using EC0 expressions 6.10a and 6.10b

Comb	Span AB	Span BC	Span CD
1	1.35Gk	1.35Gk+1.5ψoQk	1.35Gk
2	1.0Gk+1.5ψoQk	1.0Gk	1.0Gk+1.5ψoQk
3	1.25Gk	1.25Gk+1.5Qk	1.25Gk
4	1.0Gk+1.5Qk	1.0Gk	1.0Gk+1.5Qk
5	1.35Gk+1.5ψoQk	1.35Gk	1.35Gk+1.5ψoQk
6	1.0Gk	1.0Gk+1.5ψoQk	1.0Gk
7	1.25Gk+1.5Qk	1.25Gk	1.25Gk+1.5Qk
8	1.0Gk	1.0Gk+1.5Qk	1.0Gk
9	1.35Gk+1.5ψoQk	1.35Gk+1.5ψoQk	1.35Gk
10	1.35Gk	1.35Gk+1.5ψoQk	1.35Gk+1.5ψoQk
11	1.25Gk+1.5Qk	1.25Gk+1.5Qk	1.25Gk
12	1.25Gk	1.25Gk+1.5Qk	1.25Gk+1.5Qk
13	1.35Gk+1.5ψoQk	1.35Gk+1.5ψoQk	1.35Gk+1.5ψoQk
14	1.25Gk+1.5Qk	1.25Gk+1.5Qk	1.25Gk+1.5Qk

SLS load combinations using EC0 expressions 6.10a and 6.10b

Comb	Span AB	Span BC	Span CD
15	1.0Gk	1.0Gk+1.0Qk	1.0Gk

16	1.0Gk+1.0Qk	1.0Gk	1.0Gk+1.0Qk

Characteristic loads on beam

Char permanent load on span AB Gk1=25 kN/m
Char permanent load on span BC Gk2=25 kN/m
Char permanent load on span CD Gk3=25 kN/m
Char variable load on span AB Qk1=10 kN/m
Char variable load on span BC Qk2=10 kN/m
Char variable load on span CD Qk3=10 kN/m

ULS load combination values

Comb	Load on span AB (kN/m)	Load on span BC (kN/m)	Load on span CD (kN/m)
1	33.75	44.25	33.75
2	35.5	25	35.5
3	31.25	46.25	31.25
4	40	25	40
5	44.25	33.75	44.25
6	25	35.5	25
7	46.25	31.25	46.25
8	25	40	25
9	44.25	44.25	33.75
10	33.75	44.25	44.25
11	46.25	46.25	31.25
12	31.25	46.25	46.25
13	44.25	44.25	44.25
14	46.25	46.25	46.25

Copyright 1986-2024 Fitzroy Systems Ltd.

SLS load combination values

Comb	Span AB	Span BC	Span CD
15	25	35	25
16	35	25	35

If the permanent actions are ≤ 4.5 times the variable actions then loading combinations 1,2,5,6,9,10 & 13 could be ignored.

Location: Example 3 Two span beam using EC0 expression 6.10

Partial safety factors ULS

Permanent actions (unfavourable) gamG=1.35
Permanent actions (favourable) gamG=1.0
Variable actions factor gamQ=1.5

ULS load combinations using EC0 expression 6.10

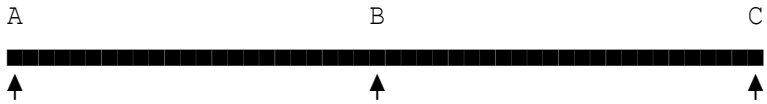

Comb	Span AB	Span BC
1	1.35Gk	1.35Gk+1.5Qk
2	1.0Gk+1.5Qk	1.0Gk
3	1.35Gk+1.5Qk	1.35Gk
4	1.0Gk	1.0Gk+1.5Qk
5	1.35Gk+1.5Qk	1.35Gk+1.5Qk

SLS load combinations using EC0 expression 6.10

Comb	Span AB	Span BC
6	1.0Gk	1.0Gk+1.0Qk
7	1.0Gk+1.0Qk	1.0Gk

Characteristic loads on beam

Char permanent load on span AB Gk1=25 kN/m
Char permanent load on span BC Gk2=25 kN/m
Char variable load on span AB Qk1=10 kN/m
Char variable load on span BC Qk2=10 kN/m

Copyright 1986-2024 Fitzroy Systems Ltd.

ULS load combination values

Comb	Load span AB (kN/m)	Load span BC (kN/m)
1	33.75	48.75
2	40	25
3	48.75	33.75
4	25	40
5	48.75	48.75

SLS load combination values

Comb	Span AB	Span BC
6	25	35
7	35	25

Location: Ex 4 Two span beam using EC0 expressions 6.10a & 6.10b

Partial safety factors ULS

Permanent actions (unfavourable)	gamG=1.35 (expression 6.10a)
Permanent actions (unfavourable)	gamG=1.25 (expression 6.10b)
Permanent actions (favourable)	gamG=1.0
Variable actions factor	gamQ=1.5
Factor Ψo for variable load	psi0=0.7

ULS load combinations using EC0 expressions 6.10a and 6.10b

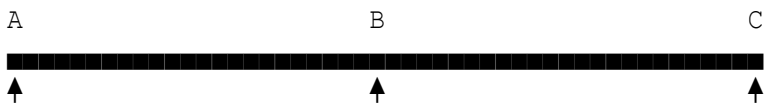

Comb	Span AB	Span BC
1	1.35Gk	1.35Gk+1.5ψoQk
2	1.0Gk+1.5ψoQk	1.0Gk
3	1.25Gk	1.25Gk+1.5Qk
4	1.0Gk+1.5Qk	1.0Gk
5	1.35Gk+1.5ψoQk	1.35Gk
6	1.0Gk	1.0Gk+1.5ψoQk
7	1.25Gk+1.5Qk	1.25Gk
8	1.0Gk	1.0Gk+1.5Qk
9	1.35Gk+1.5ψoQk	1.35Gk+1.5ψoQk
10	1.25Gk+1.5Qk	1.25Gk+1.5Qk

SLS load combinations using EC0 expressions 6.10a and 6.10b

Comb	Span AB	Span BC
11	1.0Gk	1.0Gk+1.0Qk
12	1.0Gk+1.0Qk	1.0Gk

Characteristic loads on beam

Char permanent load on span AB Gk1=25 kN/m
Char permanent load on span BC Gk2=25 kN/m
Char variable load on span AB Qk1=10 kN/m
Char variable load on span BC Qk2=10 kN/m

ULS load combination values

Comb	Load span AB (kN/m)	Load span BC (kN/m)
1	33.75	44.25
2	35.5	25
3	31.25	46.25
4	40	25
5	44.25	33.75
6	25	35.5
7	46.25	31.25
8	25	40
9	44.25	44.25
10	46.25	46.25

SLS load combination values

Comb	Span AB	Span BC
11	25	35
12	35	25

If the permanent actions are ≤ 4.5 times the variable actions then loading combinations 1,2,5,6 & 9 could be ignored.

Location: Example 5 Cantilever span beam using EC0 expression 6.10

Partial safety factors ULS

Permanent actions (unfavourable) gamG=1.35
Permanent actions (unfavourable) gamG=1.1 (for EQU)
Permanent actions (favourable) gamG=1.0
Permanent actions (favourable) gamG=0.9 (for EQU)
Variable actions factor gamQ=1.5

ULS load combinations using EC0 expression 6.10

Comb	Span AB	Span BC
1	1.35Gk+1.5Qk	1.35Gk+1.5Qk
2	1.0Gk+1.5Qk	1.0Gk+1.5Qk
3	1.35Gk+1.5Qk	1.35Gk
4	1.0Gk+1.5Qk	1.0Gk
5	1.35Gk	1.35Gk+1.5Qk
6	1.0Gk	1.0Gk+1.5Qk

SLS load combinations using EC0 expression 6.10

Comb	Span AB	Span BC
7	1.0Gk+1.0Qk	1.0Gk
8	1.0Gk	1.0Gk+1.0Qk

EQU overturning check using EC0 expression 6.10

Comb	Span AB	Span BC
9	0.9Gk	1.1Gk+1.5Qk

Characteristic loads on beam

Char permanent load on span AB Gk1=25 kN/m
Char permanent load on span BC Gk2=25 kN/m
Char variable load on span AB Qk1=10 kN/m
Char variable load on span BC Qk2=10 kN/m

ULS load combination values

Comb	Load on span AB (kN/m)	Load on span BC (kN/m)
1	48.75	48.75
2	40	40
3	48.75	33.75
4	40	25
5	33.75	48.75
6	25	40

SLS & EQU load combination values

Comb	Span AB	Span BC
7	35	25
8	25	35
9	22.5	42.5

Location: Example 6 Single span beam using EC0 expression 6.10

Partial safety factors ULS

Permanent actions (unfavourable) gamG=1.35
Variable actions factor gamQ=1.5

ULS and SLS load combinations using expression 6.10

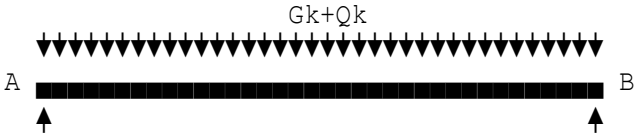

Comb	Span AB
1	1.35Gk+1.5Qk
2	1.0Gk+1.0Qk

Characteristic loads on beam

Char permanent load Gk=25 kN/m
Char variable load Qk=10 kN/m

ULS & SLS load combination values

Comb	Load on span AB (kN/m)
1	48.75
2	35

Location: Ex 7 Single span beam using EC0 expressions 6.10 & 6.10b

Partial safety factors ULS

Permanent actions (unfavourable) gamG=1.35 (expression 6.10a)
Permanent actions (unfavourable) gamG=1.25 (expression 6.10b)
Variable actions factor gamQ=1.5
Factor Ψo for variable load psi0=0.7

ULS & SLS load combinations using EC0 expressions 6.10a & 6.10b

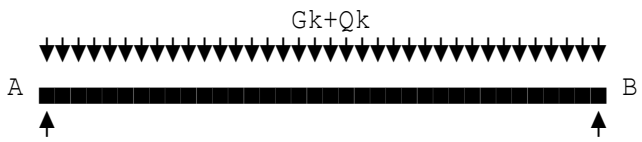

Comb	Span AB
1	1.35Gk+1.5ψoQk
2	1.25Gk+1.5*Qk
3	1.0Gk+1.0*Qk

Characteristic loads on beam

Char permanent load Gk=25 kN/m
Char variable load Qk=10 kN/m

ULS & SLS load combination values

Comb	Load on span AB (kN/m)
1	44.25
2	46.25
3	35

Location: Example 8 Three span beam using EC0 expression 6.10

Partial safety factors ULS

Permanent actions (unfavourable) gamG=1.35
Permanent actions (favourable) gamG=1.0
Variable actions factor gamQ=1.5

ULS load combinations using EC0 expression 6.10

Variable load 1 = Qk1, Variable load 2 = Qk2
Substitute Q1=(Qk1+ψoQk2) and Q2=(Qk2+ψoQk1) in the table below

Comb	Span AB	Span BC	Span CD
1 1a	1.35Gk 1.35Gk	1.35Gk+1.5Q1 1.35Gk+1.5Q2	1.35Gk 1.35Gk
2 2a	1.0Gk+1.5Q1 1.0Gk+1.5Q2	1.0Gk 1.0Gk	1.0Gk+1.5Q1 1.0Gk+1.5Q2
3 3a	1.35Gk+1.5Q1 1.35Gk+1.5Q2	1.35Gk 1.35Gk	1.35Gk+1.5Q1 1.35Gk+1.5Q2
4 4a	1.0Gk 1.0Gk	1.0Gk+1.5Q1 1.0Gk+1.5Q2	1.0Gk 1.0Gk
5 5a	1.35Gk+1.5Q1 1.35Gk+1.5Q2	1.35Gk+1.5Q1 1.35Gk+1.5Q2	1.35Gk 1.35Gk
6 6a	1.35Gk 1.35Gk	1.35Gk+1.5Q1 1.35Gk+1.5Q2	1.35Gk+1.5Q1 1.35Gk+1.5Q2
7 7a	1.35Gk+1.5Q1 1.35Gk+1.5Q2	1.35Gk+1.5Q1 1.35Gk+1.5Q2	1.35Gk+1.5Q1 1.35Gk+1.5Q2

SLS load combinations using EC0 expression 6.10

Comb	Span AB	Span BC	Span CD
8	1.0Gk	1.0Gk+1.0Qk	1.0Gk
9	1.0Gk+1.0Qk	1.0Gk	1.0Gk+1.0Qk

Note: Use loading combinations 1-7 if Qk1 is the leading variable load and loading combinations 1a-7a if Qk2 is the leading variable load. If this is not readily evident then all the above load combinations need to be considered.

Copyright 1986-2024 Fitzroy Systems Ltd.

Location: Ex 9 Three span beam using EC0 expressions 6.10a & 6.10b

Partial safety factors ULS

Permanent actions (unfavourable) gamG=1.35 (expression 6.10a)
Permanent actions (unfavourable) gamG=1.25 (expression 6.10b)
Permanent actions (favourable) gamG=1.0
Variable actions factor gamQ=1.5

ULS load combinations using expressions 6.10a and 6.10b

Variable load 1 = Qk1, Variable load 2 = Qk2
Substitute Q1=(ΨoQk1+ψoQk2), Q2=(Qk1+ψoQk2) & Q3=(Qk2+ψoQk1) below

Comb	Span AB	Span BC	Span CD
1	1.35Gk	1.35Gk+1.5Q1	1.35Gk
2	1.0Gk+1.5Q1	1.0Gk	1.0Gk+1.5Q1
3 3a	1.25Gk 1.25Gk	1.25Gk+1.5Q2 1.25Gk+1.5Q3	1.25Gk 1.25Gk
4 4a	1.0Gk+1.5Q2 1.0Gk+1.5Q3	1.0Gk 1.0Gk	1.0Gk+1.5Q2 1.0Gk+1.5Q3
5	1.35Gk+1.5Q1	1.35Gk	1.35Gk+1.5Q1
6	1.0Gk	1.0Gk+1.5Q1	1.0Gk
7 7a	1.25Gk+1.5Q2 1.25Gk+1.5Q3	1.25Gk 1.25Gk	1.25Gk+1.5Q2 1.25Gk+1.5Q3
8 8a	1.0Gk 1.0Gk	1.0Gk+1.5Q2 1.0Gk+1.5Q3	1.0Gk 1.0Gk
9	1.35Gk+1.5Q1	1.35Gk+1.5Q1	1.35Gk
10	1.35Gk	1.35Gk+1.5Q1	1.35Gk+1.5Q1

Comb	Span AB	Span BC	Span CD
11 11a	1.25Gk+1.5Q2 1.25Gk+1.5Q3	1.25Gk+1.5Q2 1.25Gk+1.5Q3	1.25Gk 1.25Gk
12 12a	1.25Gk 1.25Gk	1.25Gk+1.5Q2 1.25Gk+1.5Q3	1.25Gk+1.5Q2 1.25Gk+1.5Q3
13	1.35Gk+1.5Q1	1.35Gk+1.5Q1	1.35Gk+1.5Q1
14 14a	1.25Gk+1.5Q2 1.25Gk+1.5Q3	1.25Gk+1.5Q2 1.25Gk+1.5Q3	1.25Gk+1.5Q2 1.25Gk+1.5Q3

SLS load combinations using EC0 expressions 6.10a and 6.10b

Comb	Span AB	Span BC	Span CD
15	1.0Gk	1.0Gk+1.0Qk	1.0Gk
16	1.0Gk+1.0Qk	1.0Gk	1.0Gk+1.0Qk

Note: Use loading combinations 1-14 if Qk1 is the leading variable load and loading combinations 1,2,3a,4a,5,6,7a,8a,9,10,11a,12a,13 and 14a if Qk2 is the leading variable load. If this is not readily evident then all the above load combinations need to be considered. If the permanent actions are ≤ 4.5 times the variable actions then loading combinations 1,2,5,6,9,10 and 13 could be ignored.

Location: Example 10 Two span beam using EC0 expression 6.10

Partial safety factors ULS

Permanent actions (unfavourable) gamG=1.35
Permanent actions (favourable) gamG=1.0
Variable actions factor gamQ=1.5

ULS load combinations using EC0 expression 6.10

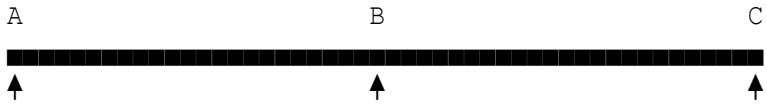

Variable load 1 = Qk1, Variable load 2 = Qk2
Substitute Q1=(Qk1+ψoQk2) and Q2=(Qk2+ψoQk1) below

Comb	Span AB	Span BC
1	1.35Gk	1.35Gk+1.5Q1
1a	1.35Gk	1.35Gk+1.5Q2
2	1.0Gk+1.5Q1	1.0Gk
2a	1.0Gk+1.5Q2	1.0Gk
3	1.35Gk+1.5Q1	1.35Gk
3a	1.35Gk+1.5Q2	1.35Gk
4	1.0Gk	1.0Gk+1.5Q1
4a	1.0Gk	1.0Gk+1.5Q2
5	1.35Gk+1.5Q1	1.35Gk+1.5Q1
5a	1.35Gk+1.5Q2	1.35Gk+1.5Q2

SLS load combinations using EC0 expression 6.10

Comb	Span AB	Span BC
6	1.0Gk	1.0Gk+1.0Qk
7	1.0Gk+1.0Qk	1.0Gk

Note: Use loading combinations 1-5 if Qk1 is the leading variable load and loading combinations 1a-5a if Qk2 is the leading variable load. If this is not readily evident then all the above load combinations need to be considered.

Copyright 1986-2024 Fitzroy Systems Ltd.

Location: Ex 11 Two span beam using EC0 expressions 6.10a & 6.10b

Partial safety factors ULS

Permanent actions (unfavourable) gamG=1.35 (expression 6.10a)
Permanent actions (unfavourable) gamG=1.25 (expression 6.10b)
Permanent actions (favourable) gamG=1.0
Variable actions factor gamQ=1.5

ULS load combinations using expressions 6.10a & 6.10b

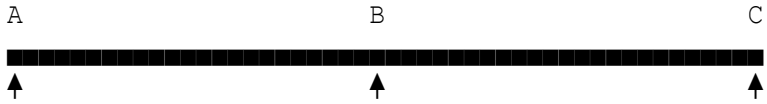

Variable load 1 = Qk1, Variable load 2 = Qk2
Substitute Q1=(ΨoQk1+ψoQk2), Q2=(Qk1+ψoQk2) & Q3=(Qk2+ψoQk1) below

Comb	Span AB	Span BC
1	1.35Gk	1.35Gk+1.5Q1
2	1.0Gk+1.5Q1	1.0Gk
3 3a	1.25Gk 1.25Gk	1.25Gk+1.5Q2 1.25Gk+1.5Q3
4 4a	1.0Gk+1.5Q2 1.0Gk+1.5Q3	1.0Gk 1.0Gk
5	1.35Gk+1.5Q1	1.35Gk
6	1.0Gk	1.0Gk+1.5Q1
7 7a	1.25Gk+1.5Q2 1.25Gk+1.5Q3	1.25Gk 1.25Gk
8 8a	1.0Gk 1.0Gk	1.0Gk+1.5Q2 1.0Gk+1.5Q3
9	1.35Gk+1.5Q1	1.35Gk+1.5Q1
10 10a	1.25Gk+1.5Q2 1.25Gk+1.5Q3	1.25Gk+1.5Q2 1.25Gk+1.5Q3

SLS load combinations using EC0 expressions 6.10a & 6.10b

Comb	Span AB	Span BC
6	1.0Gk	1.0Gk+1.0Qk
7	1.0Gk+1.0Qk	1.0Gk

Note: Use loading combinations 1-10 if Qk1 is the leading variable load and loading combinations 1,2,3a,4a,5,6,7a,8a,9 and 10a if Qk2 is the leading variable load. If this is not readily evident then all the above load combinations need to be considered. Furthermore, If the permanent actions are ≤ 4.5 times the variable actions then loading combinations 1,2,5,6 and 9 could be ignored.

Location: Example 12 Cantilever span beam using EC0 expression 6.10

Partial safety factors ULS

Permanent actions (unfavourable) gamG=1.35
Permanent actions (favourable) gamG=1.0
Variable actions factor gamQ=1.5

ULS load combinations using EC0 expression 6.10

Variable load 1 = Qk1, Variable load 2 = Qk2
Substitute Q1=(Qk1+ψoQk2) and Q2=(Qk2+ψoQk1) below

Comb	Span AB	Span BC
1	1.35Gk+1.5Q1	1.35Gk+1.5Q1
1a	1.35Gk+1.5Q2	1.35Gk+1.5Q2
2	1.0Gk+1.5Q1	1.0Gk+1.5Q1
2a	1.0Gk+1.5Q2	1.0Gk+1.5Q2
3	1.35Gk+1.5Q1	1.35Gk
3a	1.35Gk+1.5Q2	1.35Gk
4	1.0Gk+1.5Qk1	1.0Gk
4a	1.0Gk+1.5Qk2	1.0Gk
5	1.35Gk	1.35Gk+1.5Q1
5a	1.35Gk	1.35Gk+1.5Q2
6	1.0Gk	1.0Gk+1.5Q1
6a	1.0Gk	1.0Gk+1.5Q2

SLS load combinations using EC0 expression 6.10

Comb	Span AB	Span BC
7	1.0Gk+1.0Qk	1.0Gk
8	1.0Gk	1.0Gk+1.0Qk

Note: Use loading combinations 1-6 if Qk1 is the leading variable load and loading combinations 1a-6a if Qk2 is the leading variable load. If this is not readily evident then all the above load combinations need to be considered.

Location: Example 13 Single span beam using EC0 expression 6.10

Partial safety factors ULS

Permanent actions (unfavourable) gamG=1.35
Variable actions factor gamQ=1.5
Factor Ψo for variable load 1 psi0v1=0.7
Factor Ψo for variable load 2 psi0v2=0.5

ULS & SLS load combinations using expression 6.10

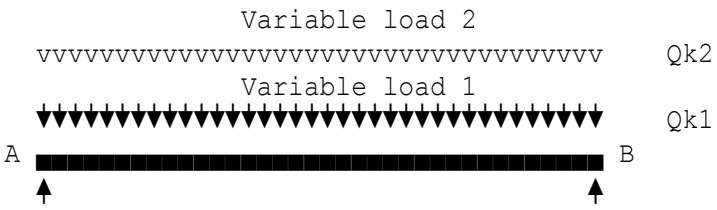

Variable load 1 = Qk1, Variable load 2 = Qk2

Comb	Span AB
1	1.35Gk+1.5Qk1+1.5ψoQk2
2	1.35Gk+1.5Qk2+1.5ψoQk1
3	1.0Gk+1.0Qk1+1.0ψoQk2
4	1.0Gk+1.0Qk2+1.0ψoQk1

Characteristic loads on beam

Char permanent load 1 Gk=25 kN/m
Char variable load 1 Qk1=10 kN/m
Char variable load 2 Qk2=5 kN/m

ULS & SLS load combination values

Comb	Load on span AB (kN/m)
1	52.5
3	37.5

Governing load combinations

Location: Ex 14 Single span beam using EC0 expressions 6.10 & 6.10b

Partial safety factors ULS

Permanent actions (unfavourable)	gamG=1.35 (expression 6.10a)
Permanent actions (unfavourable)	gamG=1.25 (expression 6.10b)
Variable actions factor	gamQ=1.5
Factor Ψo for variable load 1	psi0v1=0.7
Factor Ψo for variable load 2	psi0v2=0.5

ULS & SLS load combinations using expressions 6.10a & 6.10b

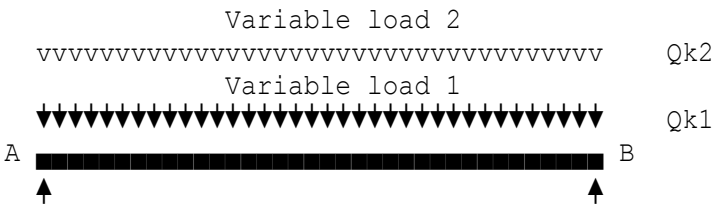

Variable load 1 = Qk1, Variable load 2 = Qk2

Comb	Span AB
1	1.35Gk+1.5ψoQk1+1.5ψoQk2
2	1.25Gk+1.5Qk1+1.5ψoQk2
3	1.25Gk+1.5Qk2+1.5ψoQk1
4	1.0Gk+1.0Qk1+1.0ψoQk2
5	1.0Gk+1.0Qk2+1.0ψoQk1

Characteristic loads on beam

Char permanent load	Gk=25 kN/m
Char variable load 1	Qk1=10 kN/m
Char variable load 2	Qk2=5 kN/m

ULS & SLS load combination values

Comb	Load on span AB (kN/m)	
1	48	
2	50	Governing load combinations
4	37.5	

Location: Ex15 - Steel braced frame (simple construction)

Partial safety factors ULS

Permanent actions (unfavourable)	gamG=1.35 (Expr. 6.10a)
Permanent actions (unfavourable)	gamG=1.25 (Expr. 6.10b, governs)
Permanent actions (favourable)	gamG=1.0 (for STR)
Permanent actions (favourable)	gamG=0.9 (for EQU)
Variable actions factor	gamQ=1.5

ULS Load Combinations to EC0 Expressions 6.10a & 6.10b

The frame is assumed to be braced (simple construction) and hence pattern loading need not be considered. Second order effects need not be considered provided the frame is sufficiently stiff (i.e. sway deformation under the design loading is relatively small) - this is deemed to be the case for elastic analysis when acr>10. The load combinations below assume the dead load is not substantially greater than the imposed load. For storage areas replace the load factor of 1.05 used below with 1.5 as the load combination factor is ψo=1.0 and not ψo=0.7.

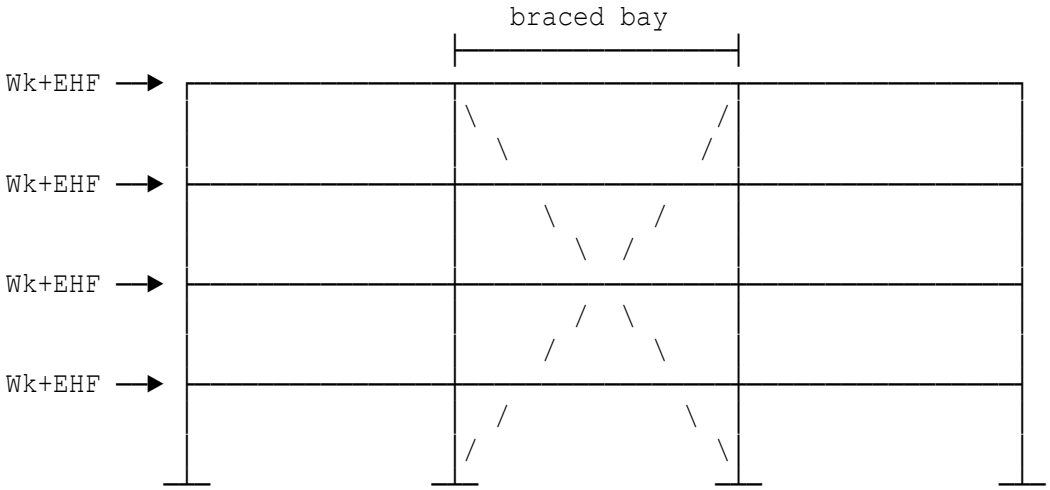

Symbols:
Ik = Imposed floor loading (Load combination factor ψo=0.7)
Ikr = Imposed roof loading (Load combination factor ψo=0.7)
Sk = Snow load applied to roof (Load combination factor ψo=0.5)
Wk = Horizontal wind load (Load combination factor ψo=0.5)
Wku = Wind uplift
EHF = Frame imperfections & equivalent horizontal forces
(i.e. Notional Horizontal Forces)

Load Combinations Using Equation 6.10b	
Roof Beams	
1	1.25Gk+1.5(Ikr or Sk)
2	1.0Gk+1.5Wku
3	1.25Gk+1.5Skr+0.75Wk
4	1.25Gk+1.5Wk+0.75Sk
Floor Beams	
5	1.25Gk+1.5Ik
Columns	
6	1.25Gk+1.5Ik+1.5(Ikr or Sk)
7	1.25Gk+1.5Ik+1.5Sk+0.75Wk
8	1.25Gk+1.5Wk+1.05Ik+0.75Sk
Columns Forming Part of Bracing System	
9	1.25Gk+1.5Ik+1.5(Ikr or Sk)+EHF
10	1.25Gk+1.5Ik+1.5Sk+0.75Wk+EHF
11	1.25Gk+1.5Wk+1.05Ik+0.75Sk+EHF

NOTE: Equation 6.10b is assumed to govern the design.

NOTE: For storage areas replace load factor 1.05 in table with 1.5.

SLS Load Combinations to EC0 Expressions 6.10a & 6.10b

Based on the UK NA to EN 1993-1-1 (Clauses NA.2.23 and NA.2.24) the vertical and horiz deflections may be checked using the characteristic combination with variable loads only (i.e. permanent loads should not be included). The following combinations are based on EC0 expression 6.10b. EHF are not required in SLS load combinations.

Comb	Load at each floor level
12	1.0Ik+1.0(Ikr or Sk)
13	1.0Wk

EQU Overturning Check to EC0 Expression 6.10

Comb	Load at each floor level
14	0.9Gk+1.5Wk+EHF

Location: Ex16 - Steel frame (continuous construction)

Partial safety factors ULS

Permanent actions (unfavourable)	gamG=1.35 (Expr. 6.10a)
Permanent actions (unfavourable)	gamG=1.25 (Expr. 6.10b, governs)
Permanent actions (favourable)	gamG=1.0 (for STR)
Permanent actions (favourable)	gamG=0.9 (for EQU)
Variable actions factor	gamQ=1.5

ULS Load Combinations to EC0 Expressions 6.10a & 6.10b

As the steel frame is of continuous construction pattern loading will need to be considered. Second order effects need not be considered provided the frame is sufficiently stiff (i.e. sway deformation under the design loading is relatively small) - this is deemed to be the case for elastic analysis when acr>10. The load combinations below assume the dead load is not substantially greater than the imposed load. For storage areas replace the load factor of 1.05 used below with 1.5 as the load combination factor is ψo=1.0 and not ψo=0.7.

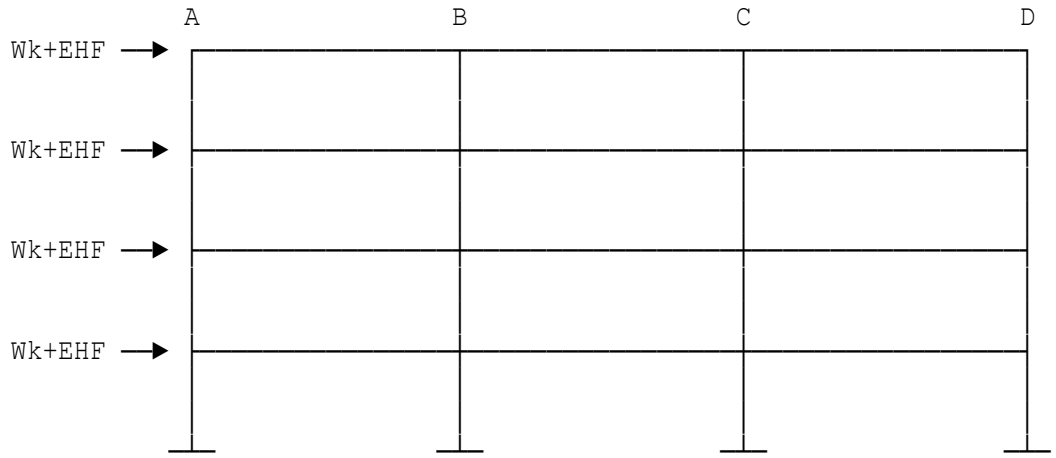

Symbols:
Ik = Imposed floor loading (Load combination factor ψo=0.7)
Ikr = Imposed roof loading (Load combination factor ψo=0.7)
Sk = Snow load applied to roof (Load combination factor ψo=0.5)
Wk = Horizontal wind load (Load combination factor ψo=0.5)
Wku = Wind uplift
EHF = Frame imperfections & equivalent horizontal forces
(i.e. Notional Horizontal Forces)

Combination	Span AB	Span BC	Span CD
1	1.25Gk+1.5Ik+1.5(Ikr or Sk)+EHF		
2	1.00Gk+1.5Wku+EHF		
3	1.25Gk+1.5Ik+1.5Sk+0.75Wk+EHF		
4	1.25Gk+1.5Wk+1.05Ik+0.75Sk+EHF		
5	1.25Gk+1.5Qk	1.25Gk	1.25Gk+1.5Qk
6	1.25Gk	1.25Gk+1.5Qk	1.25Gk
7	1.25Gk+1.5Qk		1.25Gk
8	1.25Gk	1.25Gk+1.5Qk	

For the pattern loading combinations 5 - 8 it has been assumed that the permanent actions are ≤ 4.5 times the variable actions. Storeys other than the one under consideration may be assumed to be uniformly loaded (EN 1993-1-1, Clause 6.2.1).
NOTE: For storage areas replace 1.05 with 1.5 in table above

SLS Load Combinations to EC0 Expressions 6.10a & 6.10b

Based on the UK NA to EN 1993-1-1 (Clauses NA.2.23 and NA.2.24) the vertical and horiz deflections may be checked using the characteristic combination with variable loads only (i.e. permanent loads should not be included). The following combinations are based on EC0 expression 6.10b. EHF are not required in SLS load combinations.

Comb	Load at each floor level
9	1.0Ik+1.0Sk+0.5Wk
10	1.0Wk+0.7Ik+0.5Sk
11	1.0Ik+1.0(Ikr or Sk)
12	1.0Wk

EQU Overturning Check to EC0 Expression 6.10

Comb	Load at each floor level
13	0.9Gk+1.5Wk+EHF

Location: Ex17 - Single span steel portal frame

Partial safety factors ULS

Permanent actions (unfavourable) gamG=1.35 (Expr. 6.10a)
Permanent actions (unfavourable) gamG=1.25 (Expr. 6.10b, governs)
Permanent actions (favourable) gamG=1.0 (for STR)
Permanent actions (favourable) gamG=0.9 (for EQU)
Variable actions factor gamQ=1.5

ULS Load Combinations to EC0 Expression 6.10b

Portal frame designers will generally choose Equations 6.10a & 6.10b over the more onerous Equation 6.10. Furthermore assuming the ratio of permanent to imposed loading is not high which is particularly unlikely for this form of construction, equation 6.10b combinations are more onerous than 6.10a combinations and will be adopted here. For the single span steel portal frame below the combined permanent and service loads will be treated as one permanent load.

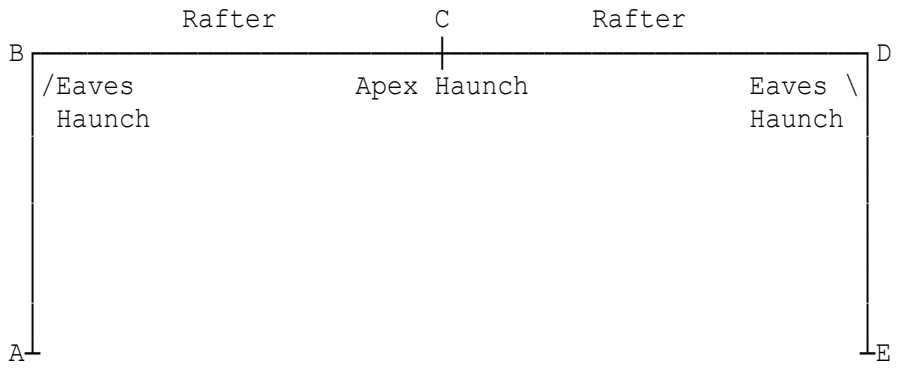

Symbols:
Gksup = Permanent load + Service load
Gkinf = Permanent load
Ik = Imposed load (Load combination factor ψo=0.7)
Sk = Uniform snow load (Load combination factor ψo=0.5)
Wk = Horizontal wind load (Load combination factor ψo=0.5)
Wkup = Wind uplift
Ad = Load from snow drift (accidental load condition)
EHF = Frame imperfections & equivalent horizontal forces
(i.e. Notional Horizontal Forces)

Combination	Combinations From Equation 6.10b
1	1.25Gksup+1.5(Ik or Sk)+EHF
2	1.25Gksup+1.5Sk+0.75Wk+EHF
3	1.25Gksup+1.5Wk+0.75Sk+EHF
4	1.0Gkinf+1.5Wkup+EHF
Accidental Load Combinations From Equation 6.11b	
5	1.0Gksup+1.0Ad+EHF
6	1.0Gksup+1.0Ad+0.2Wk+EHF

SLS Load Combinations to EC0 Expressions 6.14b

Based on the UK NA to EN 1993-1-1 (Clauses NA.2.23 and NA.2.24) the vertical and horiz deflections may be checked using the characteristic combination with variable loads only (i.e. permanent loads should not be included). The following combinations are based on EC0 expression 6.14b. EHF are not required in SLS load combinations.

Comb	Combinations From Equation 6.14b
7	1.0(Ik or Sk)
8	1.0Sk+0.5Wk
9	0.5Sk+1.0Wk
10	1.0Wkup

EQU Overturning Check to EC0 Expression 6.10

Comb	Load at each floor level
11	0.9Gksup+1.5Wk+EHF

Notes regarding proformas for the design of pilecaps

General principles

Clause 3.11.4.1 of BS8110 permits the analysis of reinforced concrete pile caps to be undertaken either by conventional bending theory or by truss analogy, whereby the lines of principal stress are represented by an imaginary three-dimensional triangulated space frame.

The latter method is only applicable to pilecaps for groups of up to 5 piles. However, in view of the relatively large depth-to-span ratio of caps for smaller numbers of piles, it is suggested that truss analogy may model the actual stress distribution in the cap more closely than conventional bending theory. It may well be possible to achieve a more satisfactory solution by analysing the pilecap as a deep beam but such methods often lead to the need to provide rather complex arrangements of reinforcement, and so have not been used in these proformas.

Proformas are currently provided for designing pile caps for groups of two, four and five piles by truss analogy, and for groups of from two to nine piles by conventional bending theory. For those groups where proformas for both design methods are provided, it will generally be found that bending theory requires a smaller cross-sectional area of reinforcement than truss analogy. However, because more main steel is necessary with the latter method, the permissible shearing stress of the concrete alone is higher and thus, in those cases where either the direct or punching shear along the critical plane is the factor which determines the minimum permissible cap thickness, it is then possible to adopt a more-shallow cap when using truss analogy. In many cases, though, the factor determining the minimum cap thickness is either the punching shear around the column face, or simply the practical need to provide a sufficient length within the cap for adequate anchorage bond for the column starter bars.

From the practical point of view, one principal difference between the two analytical methods is that with truss theory the main tension bars are assumed to be fully stressed to a point beyond the centres of the piles (the BS8110 Handbook specifies the point as φ/5 inside the outer limit of the pile) and a full anchorage-bond length must be provided beyond this. With bending theory the critical sections controlling the provision of reinforcement are at the column faces and, in principal, anchorage-bond lengths can be measured from here. However as mentioned above, the condition controlling the cap design is usually the shear along a plane located at a distance of φ/5 inside the inner limit of the piles (see Figure 3.23 of BS8110). The permissible shearing stress in the concrete at this point, without special shearing reinforcement such as links being provided (a situation which is beyond the scope of these proformas), is determined by the amount of tension steel present that extends a distance at least equal either to the effective depth of the cap beyond the point considered, or to twelve times the size of the bar, whichever is the greater (almost always the former). Thus it is seldom worthwhile curtailing any bars closer to the critical plane. In addition, both the IStructE/The Concrete Society 'Standard method of detailing structural concrete' and the IStructE/ICE 'Manual for the design of RC building structures' require the provision of horizontal bars around the sides of the cap, and it is therefore quite convenient

for detailing purposes, to secure these to main bars which are bent up into the sides of the cap. Thus for designs that are based on bending theory, all the main bars extend the required bond length beyond the critical shear plane: for designs based on truss analogy, all the main bars extend the specified bond length measured from a point φ/5 within the outer face of the outer row of piles.

If the main bars have to be turned up into the sides of the pilecap in order to provide the required bond length it may be necessary to adopt a radius of bend which exceeds the standard value, so as to reduce the bearing stress within the bend to a satisfactory figure. In such circumstances the controlling value is the true stress in the bar at the point at which the bend commences. At this juncture in the calculation the correct radius of bend is not yet known, so the procedure adopted in the proformas is first to determine the radius required if the bar is fully stressed. This figure is then used to estimate the position at which the bend starts. The true stress in the bar at this point is now found and the radius of bend recalculated accordingly.

In the majority of cases, the bond length needed is not determined by the stress in the bar but by the requirement in Clause 3.4.5.4 of the Code that all main reinforcement considered to contribute to the shear resistance at any section must extend a distance at least equal to the effective depth of the section beyond the point considered. In cases in which the effective depth that has been adopted exceeds the minimum needed to satisfy bending and shearing requirements, the minimum bond length is taken as equal to the minimum effective depth required; not the actual effective depth provided (if this is greater).

If the main bars do not turn up into, and extend to the full height of the cap, it will probably be necessary to provide light vertical bars in order to secure the horizontal reinforcement in the cap sides. No account of such bars has been taken when calculating the total steel needed in the cap. The calculations of amounts of reinforcement are mainly intended to enable the economics of one design to be compared to another. Thus, although specific bar-scheduling details are given in the Summary, these details should be carefully checked by hand and modified where necessary when the final design calculations have been undertaken.

When the pilecap is designed by truss analogy, Cl.3.11.4.2 of the Code states that all the reinforcement constituting the tension members of the space frame must be located within a band having a width of three times the pile diameter symmetrically arranged about the piles. Thus, if the pile spacing greatly exceeds 3φ it becomes necessary to provide additional distribution bars between the bands of main steel. In caps designed by bending theory, the main bars are spaced evenly across the cap and no distribution bars are needed in the bottom of the section.

Cl.4.10.10 of the IStructE/ICE 'Manual for the design of RC structures' also recommends the provision of distribution steel in the top of the pilecap in both principal directions: this requirement is omitted from both BS8110 and the Detailing Manual. All the proformas provide the option to design the necessary steel if required.

Where piles are widely spaced, the Code Handbook indicates that it may be necessary to check the punching shear along a perimeter 1.5 times

the effective depth from the column perimeter. However, investigations that were made during the development of these proformas indicate that this condition is seldom likely to be critical unless the pile spacing is exceptionally large. Such a situation has not been considered when preparing these proformas.

If the piles are closely spaced and the size of the column in either direction is large the column may intersect the critical planes for punching and direct shear defined in BS8110. In such a situation it is assumed that punching cannot occur, and the proforma does not consider this form of failure. Direct shear is still checked along the plane specified but, due to the proximity of the column and pile, the shear stress in the concrete may be increased to its limiting value and thus failure due to shear at this plane is almost impossible theoretically.

Each proforma first determines the minimum pilecap thickness that may be adopted which meets all the relevant constraints such as the resistance to shearing and punching, etc. In order to keep the thickness of the cap to a minimum, in these preliminary calculations it is assumed that the maximum bar size to be employed will be 40 mm. It is seldom possible to use very large bars as reinforcement due to the difficulty in providing adequate bond length. If, however, the use of 50 mm bars is intended the overall cap depth chosen should be at least 10 mm more than the minimum value offered.

When reinforcement has be be selected, suitable bar arrangements which satisfy bond and spacing requirements, etc are displayed in increasing order of area, and the top values (i.e. the least area) are offered as defaults. The selection of a different size of bar causes the matching spacing to be offered as a default automatically. For those proformas that are based on bending theory, the shear resistance at a section is determined by the total proportion of main steel (which is distributed right across the cap), and enhanced where appropriate over strips 3φ wide centred on the piles. Except for the 2-pile cap (see below), for the truss-analogy proformas the shear resistance is provided by strips 3φ wide, where the resistance (enhanced if applicable) is based on the steel provided within each strip, plus the resistance (non-enhanced of course) of the remaining concrete based on the distribution steel that is actually provided over these areas.

Notes regarding proformas for the design of pilecaps

General principles

EC2 Part 1-1:2004 Clause 9.8.1(2) permits the analysis of reinforced concrete pile to be undertaken either by conventional bending theory or by truss analogy, whereby the lines of principal stress are represented by an imaginary three-dimensional triangulated space frame.

The latter method is only applicable to pilecaps for groups of up to 5 piles. However, in view of the relatively large depth-to-span ratio of caps for smaller numbers of piles, it is suggested that truss analogy may model the actual stress distribution in the cap more closely than conventional bending theory. It may well be possible to achieve a more satisfactory solution by analysing the pilecap as a deep beam but such methods often lead to the need to provide rather complex arrangements of reinforcement, and so have not been used in these proformas.

Proformas are currently provided for designing pile caps for groups of two, four and five piles by truss analogy, and for groups of from two to nine piles by conventional bending theory. For those groups where proformas for both design methods are provided, it will generally be found that bending theory requires a smaller cross-sectional area of reinforcement than truss analogy. However, because more main steel is necessary with the latter method, the permissible shearing stress of the concrete alone is higher and thus, in those cases where either the direct or punching shear along the critical plane is the factor which determines the minimum permissible cap thickness, it is then possible to adopt a more-shallow cap when using truss analogy. In many cases, though, the factor determining the minimum cap thickness is either the punching shear around the column face, or simply the practical need to provide a sufficient length within the cap for adequate anchorage bond for the column starter bars.

From the practical point of view, one principal difference between the two analytical methods is that with truss theory the main tension bars are assumed to be fully stressed to a point beyond the centres of the piles (this point is specified at Φ/5 inside the outer limit of the pile) and a full anchorage-bond length must be provided beyond this. With bending theory the critical sections controlling the provision of reinforcement are at the column faces and, in principal,anchorage-bond lengths can be measured from here. However as mentioned above, the condition controlling the cap design is usually the shear along a plane located at a distance of Φ/5 inside the inner limit of the piles. The permissible shearing stress in the concrete at this point, without special shearing reinforcement such as links being provided (a situation which is beyond the scope of these proformas), is determined by the amount of tension steel present that extends a distance at least equal either to the effective depth of the cap beyond the point considered, or to twelve times the size of the bar, whichever is the greater (almost always the former). Thus it is seldom worthwhile curtailing any bars closer to the critical plane. In addition, the IStructE/ICE 'Manual for the design of RC building structures' require the provision of horizontal bars around the sides of the cap, and it is therefore quite convenient for detailing purposes, to secure these to main bars which are bent up into the sides of the cap. Thus for designs that are

based on bending theory, all the main bars extend the required bond length beyond the critical shear plane: for designs based on truss analogy, all the main bars extend the specified bond length measured from a point Φ/5 within the outer face of the outer row of piles.

If the main bars have to be turned up into the sides of the pilecap in order to provide the required bond length it may be necessary to adopt a radius of bend which exceeds the standard value, so as to reduce the bearing stress within the bend to a satisfactory figure.

In the majority of cases, the bond length needed is not determined by the stress in the bar but by the requirement that all main reinforcement considered to contribute to the shear resistance at any section must extend a distance at least equal to the effective depth of the section beyond the point considered. In cases in which the effective depth that has been adopted exceeds the minimum needed to satisfy bending and shearing requirements, the minimum bond length is taken as equal to the min effective depth required; not the actual effective depth provided (if this is greater).

If the main bars do not turn up into, and extend to the full height of the cap, it will probably be necessary to provide light vertical bars in order to secure the horizontal reinforcement in the cap sides. No account of such bars has been taken when calculating the total steel needed in the cap. The calculations of amounts of reinforcement are mainly intended to enable the economics of one design to be compared to another. Thus, although specific bar-scheduling details are given in the Summary, these details should be carefully checked by hand and modified where necessary when the final design calculations have been undertaken.

When the pilecap is designed by truss analogy, all the reinforcement constituting the tension members of the space frame must be located within a band having a width of three times the pile diameter symmetrically arranged about the piles. Thus, if the pile spacing greatly exceeds 3Φ it becomes necessary to provide additional distribution bars between the bands of main steel. In caps designed by bending theory, the main bars are spaced evenly across the cap and no distribution bars are needed in the bottom of the section.

The IStructE 'Manual for the design of RC structures' also recommends the provision of distribution steel in the top of the pilecap in both principal directions. All the proformas provide the option to design the necessary steel if required.

If the piles are closely spaced and the size of the column in either direction is large the column may intersect the critical planes for punching and direct shear defined in EC2. In such a situation it is assumed that punching cannot occur, and the proforma does not consider this form of failure. Direct shear is still checked along the plane specified but, due to the proximity of the column and pile, the shear stress in the concrete may be increased to its limiting value and thus failure due to shear at this plane is almost impossible theoretically.

When reinforcement has be be selected, suitable bar arrangements which satisfy bond and spacing requirements, etc are displayed in increasing order of area, and the top values (i.e. the least area) are offered as

defaults. The selection of a different size of bar causes the matching spacing to be offered as a default automatically. For those proformas that are based on bending theory, the shear resistance at a section is determined by the total proportion of main steel (which is distributed right across the cap), and enhanced where appropriate over strips 3Φ wide centred on the piles. Except for the 2-pile cap (see below), for the truss-analogy proformas the shear resistance is provided by strips 3Φ wide, where the resistance (enhanced if applicable) is based on the steel provided within each strip, plus the resistance (non-enhanced of course) of the remaining concrete based on the distribution steel that is actually provided over these areas.

Location: Ex1 - Typical pilecap

Design to BS8110(1997) with partial safety factor for steel gammaS=1.15

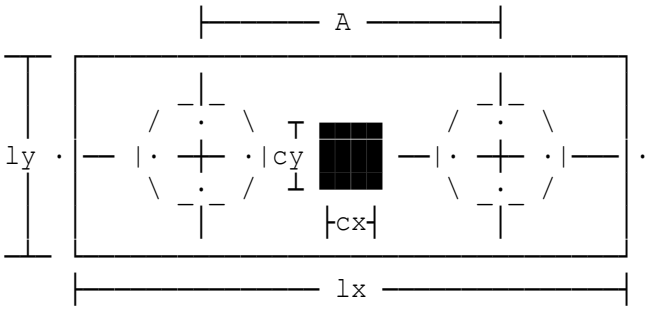

Pilecap for two piles

Designed by Truss Analogy.

Calculations are in accordance with BS8110.

For bond calculations, any high-yield bars are assumed Type 2 deformed.

Total ultimate load on column	N=2800 kN
Column dimension cx	cx=500 mm
Column dimension cy	cy=500 mm
Nominal pile diameter	PileD=450 mm
Spacing of pile centres	A=1350 mm
Overhang: pile face to cap edge	olap=150 mm
Length of pilecap	lx=2100 mm
Width of pilecap	ly=750 mm
Concrete grade	fcu=35 N/mm²
Steel strength	fy=500 N/mm²
Cover to underside of main bars	Cover=150 mm
Side and top cover to main bars	SCover=75 mm
Chosen depth of pilecap	h=920 mm

Design of main reinforcement

Main steel diameter	dia=20 mm
Main steel spacing	Space=60 mm

Distribution steel

Distribution steel diameter	LSize=20 mm
Spacing of bars	LSpac=260 mm

MAIN REINFORCEMENT SUMMARY	**Characteristic strength**	**500 N/mm²**
	Diameter of bars	**20 mm**
	Number of bars	**10**
	Spacing	**60 mm**
	Area required	**2898 mm²**
	Area provided	**3141.6 mm²**
	Volume of steel	**8608 cm³**
	Weight of steel	**67.573 kg**

DISTRIBUTION REINFORCEMENT SUMMARY	**Characteristic strength**	**500 N/mm²**
	Diameter of bars	**20 mm**
	Number of bars	**8**
	Spacing of bars	**260 mm**
	Area required	**1196 mm²/m**
	Area provided	**1208.3 mm²/m**
	Volume of steel	**8419.5 cm³**
	Weight of steel	**66.093 kg**
TOP BARS SUMMARY	**Characteristic strength**	**500 N/mm²**
	Diameter of bars	**20 mm**
	Number of bars	**3**
	Spacing of bars	**260 mm**
	Volume of steel	**1837.8 cm³**
	Weight of steel	**14.427 kg**
SIDE BARS SUMMARY	**Characteristic strength**	**500 N/mm²**
	Diameter of bars	**12 mm**
	Number of bars/side	**3**
	Spacing of bars	**250 mm**
	Volume of steel	**1323.2 cm³**
	Weight of steel	**10.387 kg**
QUANTITIES	**Total volume of concrete needed**	**1.449 m³**
	Total area of formwork	**5.244 m²**
	Total volume of steel	**20189 cm³**
	Total weight of steel	**158.48 kg**
	Approx.self-weight of pilecap	**48.686 kN**
	Approx.total load on each pile	**1425 kN**

Location: Ex2 - Heavily-loaded column.

Design to BS8110(1997) with partial safety factor for steel gammaS=1.15

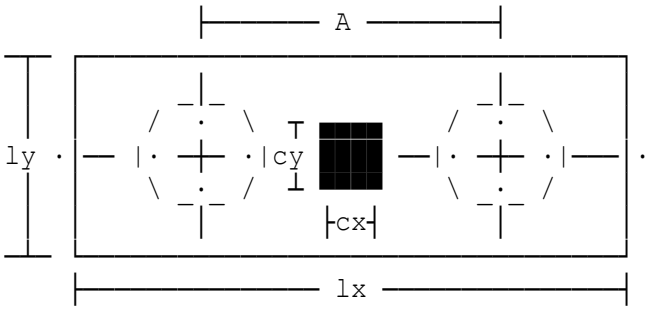

Pilecap for two piles

Designed by Truss Analogy.

Calculations are in accordance with BS8110.

For bond calculations, any high-yield bars are assumed Type 2 deformed.

Total ultimate load on column	N=10000 kN
Column dimension cx	cx=500 mm
Column dimension cy	cy=500 mm
Nominal pile diameter	PileD=500 mm
Spacing of pile centres	A=1500 mm
Overhang: pile face to cap edge	olap=300 mm
Length of pilecap	lx=2600 mm
Width of pilecap	ly=1100 mm
Concrete grade	fcu=35 N/mm²
Steel strength	fy=500 N/mm²
Cover to underside of main bars	Cover=150 mm
Side and top cover to main bars	SCover=75 mm
Chosen depth of pilecap	h=1660 mm

Design of main reinforcement

Main steel diameter	dia=25 mm
Main steel spacing	Space=80 mm

Distribution steel

Distribution steel diameter	LSize=20 mm
Spacing of bars	LSpac=145 mm

MAIN REINFORCEMENT SUMMARY	**Characteristic strength**	**500 N/mm²**
	Diameter of bars	**25 mm**
	Number of bars	**12**
	Spacing	**80 mm**
	Area required	**5788.6 mm²**
	Area provided	**5890.5 mm²**
	Volume of steel	**25388 cm³**
	Weight of steel	**199.3 kg**

DISTRIBUTION REINFORCEMENT SUMMARY	**Characteristic strength**	**500 N/mm²**
	Diameter of bars	**20 mm**
	Number of bars	**17**
	Spacing of bars	**145 mm**
	Area required	**2158 mm²/m**
	Area provided	**2166.6 mm²/m**
	Volume of steel	**29534 cm³**
	Weight of steel	**231.84 kg**
TOP BARS SUMMARY	**Characteristic strength**	**500 N/mm²**
	Diameter of bars	**20 mm**
	Number of bars	**7**
	Spacing of bars	**145 mm**
	Volume of steel	**5387.8 cm³**
	Weight of steel	**42.294 kg**
SIDE BARS SUMMARY	**Characteristic strength**	**500 N/mm²**
	Diameter of bars	**12 mm**
	Number of bars/side	**6**
	Spacing of bars	**250 mm**
	Volume of steel	**3325.1 cm³**
	Weight of steel	**26.102 kg**
QUANTITIES	**Total volume of concrete needed**	**4.7476 m³**
	Total area of formwork	**12.284 m²**
	Total volume of steel	**63635 cm³**
	Total weight of steel	**499.53 kg**
	Approx.self-weight of pilecap	**159.52 kN**
	Approx.total load on each pile	**5080 kN**

Location: Ex3 - Lightly-loaded column.

Design to BS8110(1997) with partial safety factor for steel gammaS=1.15

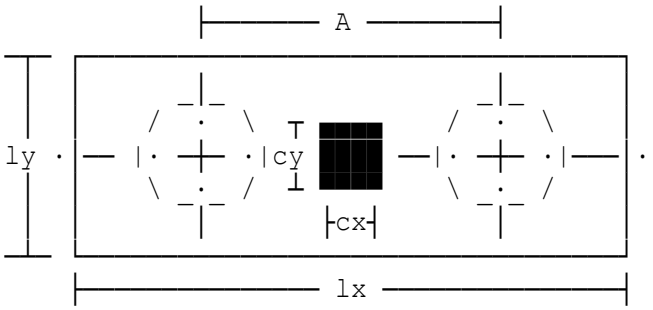

Pilecap for two piles

Designed by Truss Analogy.

Calculations are in accordance with BS8110.

For bond calculations, any high-yield bars are assumed Type 2 deformed.

Total ultimate load on column	N=100 kN
Column dimension cx	cx=500 mm
Column dimension cy	cy=500 mm
Nominal pile diameter	PileD=450 mm
Spacing of pile centres	A=1350 mm
Overhang: pile face to cap edge	olap=600 mm
Length of pilecap	lx=3000 mm
Width of pilecap	ly=1650 mm
Concrete grade	fcu=35 N/mm²
Steel strength	fy=500 N/mm²
Cover to underside of main bars	Cover=150 mm
Side and top cover to main bars	SCover=75 mm
Chosen depth of pilecap	h=300 mm

Design of main reinforcement

Main steel diameter	dia=12 mm
Main steel spacing	Space=275 mm

Distribution steel

Distribution steel diameter	LSize=12 mm
Spacing of bars	LSpac=285 mm

MAIN REINFORCEMENT SUMMARY	**Characteristic strength**	**500 N/mm²**
	Diameter of bars	**12 mm**
	Number of bars	**6**
	Spacing	**275 mm**
	Area required	**643.5 mm²**
	Area provided	**678.58 mm²**
	Volume of steel	**1628.6 cm³**
	Weight of steel	**12.785 kg**

DISTRIBUTION REINFORCEMENT SUMMARY	**Characteristic strength**	**500 N/mm²**
	Diameter of bars	**12 mm**
	Number of bars	**11**
	Spacing of bars	**285 mm**
	Area required	**390 mm²/m**
	Area provided	**396.83 mm²/m**
	Volume of steel	**4486.1 cm³**
	Weight of steel	**35.216 kg**
TOP BARS SUMMARY	**Characteristic strength**	**500 N/mm²**
	Diameter of bars	**12 mm**
	Number of bars	**6**
	Spacing of bars	**285 mm**
	Volume of steel	**1934 cm³**
	Weight of steel	**15.182 kg**
SIDE BARS SUMMARY	**Characteristic strength**	**500 N/mm²**
	Diameter of bars	**12 mm**
	Number of bars/side	**1**
	Spacing of bars	**250 mm**
	Volume of steel	**644.65 cm³**
	Weight of steel	**5.0605 kg**
QUANTITIES	**Total volume of concrete needed**	**1.485 m³**
	Total area of formwork	**2.79 m²**
	Total volume of steel	**8693.3 cm³**
	Total weight of steel	**68.243 kg**
	Approx.self-weight of pilecap	**49.896 kN**
	Approx.total load on each pile	**75 kN**

Location: Ex1 - Typical pilecap

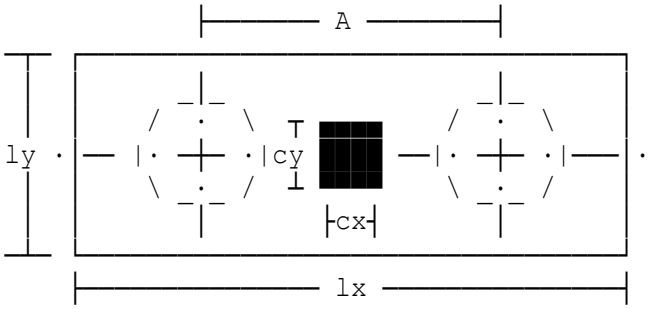

Pilecap for two piles

Designed by Truss Analogy to BS EN 1992-1-1:2004.

Ultimate load and moment values to be used.

Total design load on column	N=1500 kN
Column dimension cx	cx=500 mm
Column dimension cy	cy=500 mm
Nominal pile diameter	PileD=450 mm
Partial safety factor for steel	gams=1.15
Partial safety factor for conc.	gamc=1.5
Spacing of pile centres	A=1350 mm
Overhang: pile face to cap edge	olap=150 mm
Length of pilecap	lx=2100 mm
Width of pilecap	ly=750 mm
Char yield strength of reinft.	fyk=500 N/mm²
Cover to underside of main bars	Cover=150 mm
Side and top cover to main bars	SCover=75 mm
Chosen depth of pilecap	h=1000 mm

Design of main reinforcement

Main steel diameter	dia=16 mm
Main steel spacing	Space=90 mm
Distribution steel diameter	LSize=12 mm
Spacing of bars	LSpac=75 mm

Check shear resistance

Shear force due to ultimate load	VEd=N/2=750 kN
Shear resistance	VRdc=beta'*CRdc*ks*vRdc*bw*d/1000 =830.04 kN
Modified shear resistance	VRdc=VRdm=848.61 kN

SHEAR SUMMARY	**Shear force**	**750 kN**
	Shear resistance	**848.61 kN**

Hence section is satisfactory, no shear reinforcement is required.

Check punching shear at column face

Check punching shear at column face:

Eccentricity factor β	beta=1
Shear stress at column perimeter	vEd=beta*VEd*1000/(uo*d)=0.89074 N/mm²
Maximum punching shear resistance	vRdmax=0.5*v*fcd=4.9728 N/mm²

Shear stress at column perimeter is within the maximum punching shear resistance, hence satisfactory.

Check strength of struts and nodes - Clauses 6.5.2(2) and 6.5.4(4)

Strength of concrete strut:
Strut compressive stress Sstr=Cstr*1000/(cy*Wstr)=4.928 N/mm²
Design strength of conc. strut SRdmax=0.6*(1-fck/250)*fcd
=8.4538 N/mm²
The strut compressive stress is ≤ the strut design strength, hence OK.
Strength of upper strut node:
Stress on horizontal plane SEd1=0.5*N*1000/(cx/2*cy)=6 N/mm²
Stress on vertical plane SEd2=Cstr*1000*A/(2*Lstr*comp)
=3.856 N/mm²
Strength of compression node SRdmax=(1-fck/250)*fcd=14.09 N/mm²
The stress in horizontal and vertical planes is satisfactory.
Strength of lower strut node:
Stress in strut SEd1=Sstr=4.928 N/mm²
Stress in pile SEd2=0.5*N*1000/((PileD)^2*PI/4)
=4.7157 N/mm²
Strength of compression node SRdmax=0.85*(1-fck/250)*fcd
=11.976 N/mm²
The stress in strut and pile is satisfactory.

MAIN REINFORCEMENT SUMMARY	**Characteristic strength**	**500 N/mm²**
	Diameter of bars	**16 mm**
	Number of bars	**7**
	Spacing	**90 mm**
	Area required	**1402.9 mm²**
	Area provided	**1407.4 mm²**
DISTRIBUTION REINFORCEMENT SUMMARY	**Characteristic strength**	**500 N/mm²**
	Diameter of bars	**12 mm**
	Number of bars	**27**
	Spacing of bars	**75 mm**
	Area required	**1500 mm²/m**
	Area provided	**1508 mm²/m**
TOP BARS SUMMARY	**Characteristic strength**	**500 N/mm²**
	Diameter of bars	**12 mm**
	Number of bars	**9**
	Spacing of bars	**75 mm**
SIDE BARS SUMMARY	**Characteristic strength**	**500 N/mm²**
	Diameter of bars	**12 mm**
	Number of bars/side	**4**
	Spacing of bars	**250 mm**
QUANTITIES	**Total concrete volume**	**1.575 m³**
	Total area of formwork	**5.7 m²**

Location: Ex2 - Heavily-loaded column

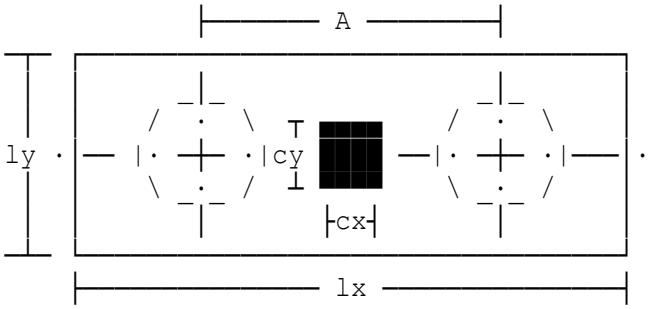

Pilecap for two piles

Designed by Truss Analogy to BS EN 1992-1-1:2004.

Ultimate load and moment values to be used.

Total design load on column	N=2500 kN
Column dimension cx	cx=500 mm
Column dimension cy	cy=500 mm
Nominal pile diameter	PileD=500 mm
Partial safety factor for steel	gams=1.15
Partial safety factor for conc.	gamc=1.5
Spacing of pile centres	A=1500 mm
Overhang: pile face to cap edge	olap=300 mm
Length of pilecap	lx=2600 mm
Width of pilecap	ly=1100 mm
Char yield strength of reinft.	fyk=500 N/mm²
Cover to underside of main bars	Cover=150 mm
Side and top cover to main bars	SCover=75 mm
Chosen depth of pilecap	h=1200 mm

Design of main reinforcement

Main steel diameter	dia=12 mm
Main steel spacing	Space=50 mm
Distribution steel diameter	LSize=25 mm
Spacing of bars	LSpac=270 mm

Check shear resistance

Shear force due to ultimate load	VEd=N/2=1250 kN
Shear resistance	VRdc=beta'*CRdc*ks*vRdc*bw*d/1000 =1439.1 kN
Modified shear resistance	VRdc=VRdm=1567.8 kN

SHEAR SUMMARY	**Shear force**	**1250 kN**
	Shear resistance	**1567.8 kN**

Hence section is satisfactory, no shear reinforcement is required.

Check punching shear at column face

Check punching shear at column face:

Eccentricity factor β	beta=1
Shear stress at column perimeter	vEd=beta*VEd*1000/(uo*d)=1.1973 N/mm²
Maximum punching shear resistance	vRdmax=0.5*v*fcd=5.5808 N/mm²

Shear stress at column perimeter is within the maximum punching shear resistance, hence satisfactory.

MAIN REINFORCEMENT SUMMARY	**Characteristic strength**	**500 N/mm²**
	Diameter of bars	**12 mm**
	Number of bars	**19**
	Spacing	**50 mm**
	Area required	**2093.4 mm²**
	Area provided	**2148.8 mm²**
DISTRIBUTION REINFORCEMENT SUMMARY	**Characteristic strength**	**500 N/mm²**
	Diameter of bars	**25 mm**
	Number of bars	**10**
	Spacing of bars	**270 mm**
	Area required	**1800 mm²/m**
	Area provided	**1818.1 mm²/m**
TOP BARS SUMMARY	**Characteristic strength**	**500 N/mm²**
	Diameter of bars	**25 mm**
	Number of bars	**4**
	Spacing of bars	**270 mm**
SIDE BARS SUMMARY	**Characteristic strength**	**500 N/mm²**
	Diameter of bars	**12 mm**
	Number of bars/side	**4**
	Spacing of bars	**250 mm**
QUANTITIES	**Total concrete volume**	**3.432 m³**
	Total area of formwork	**8.88 m²**

Location: Ex3 - Lightly-loaded column

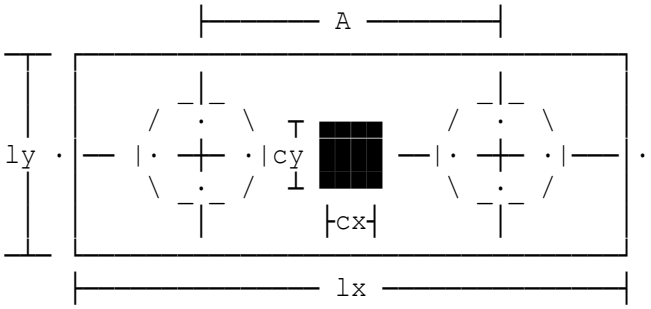

Pilecap for two piles

Designed by Truss Analogy to BS EN 1992-1-1:2004.

Ultimate load and moment values to be used.

Total design load on column	N=100 kN
Column dimension cx	cx=500 mm
Column dimension cy	cy=500 mm
Nominal pile diameter	PileD=450 mm
Partial safety factor for steel	gams=1.15
Partial safety factor for conc.	gamc=1.5
Spacing of pile centres	A=1350 mm
Overhang: pile face to cap edge	olap=600 mm
Length of pilecap	lx=3000 mm
Width of pilecap	ly=1650 mm
Char yield strength of reinft.	fyk=500 N/mm²
Cover to underside of main bars	Cover=150 mm
Side and top cover to main bars	SCover=75 mm
Chosen depth of pilecap	h=300 mm

Design of main reinforcement

Main steel diameter	dia=12 mm
Main steel spacing	Space=225 mm
Distribution steel diameter	LSize=12 mm
Spacing of bars	LSpac=250 mm

Check shear resistance

Shear force due to ultimate load	VEd=N/2=50 kN
Shear resistance	VRdc=beta'*CRdc*ks*vRdc*bw*d/1000 =120.05 kN
Modified shear resistance	VRdc=VRdm=124.46 kN

SHEAR SUMMARY	**Shear force**	**50 kN**
	Shear resistance	**124.46 kN**

Hence section is satisfactory, no shear reinforcement is required.

Check punching shear at column face

Check punching shear at column face:

Eccentricity factor β	beta=1
Shear stress at column perimeter	vEd=beta*VEd*1000/(uo*d)=0.34722 N/mm²
Maximum punching shear resistance	vRdmax=0.5*v*fcd=4.9728 N/mm²

Shear stress at column perimeter is within the maximum punching shear resistance, hence satisfactory.

MAIN REINFORCEMENT SUMMARY	**Characteristic strength**	**500 N/mm²**
	Diameter of bars	**12 mm**
	Number of bars	**7**
	Spacing	**225 mm**
	Area required	**742.5 mm²**
	Area provided	**791.68 mm²**
DISTRIBUTION REINFORCEMENT SUMMARY	**Characteristic strength**	**500 N/mm²**
	Diameter of bars	**12 mm**
	Number of bars	**12**
	Spacing of bars	**250 mm**
	Area required	**450 mm²/m**
	Area provided	**452.39 mm²/m**
TOP BARS SUMMARY	**Characteristic strength**	**500 N/mm²**
	Diameter of bars	**12 mm**
	Number of bars	**7**
	Spacing of bars	**250 mm**
SIDE BARS SUMMARY	**Characteristic strength**	**500 N/mm²**
	Diameter of bars	**12 mm**
	Number of bars/side	**1**
	Spacing of bars	**250 mm**
QUANTITIES	**Total concrete volume**	**1.485 m³**
	Total area of formwork	**2.79 m²**

Location: Ex4 - Typical pilecap

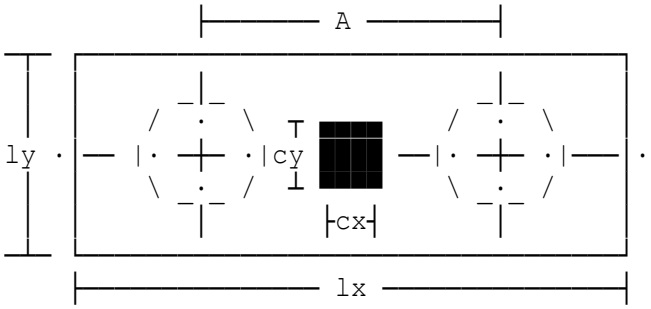

Pilecap for two piles

Designed by Truss Analogy to BS EN 1992-1-1:2004.

Ultimate load and moment values to be used.

Total design load on column	N=1800 kN
Column dimension cx	cx=500 mm
Column dimension cy	cy=500 mm
Nominal pile diameter	PileD=450 mm
Partial safety factor for steel	gams=1.15
Partial safety factor for conc.	gamc=1.5
Spacing of pile centres	A=1350 mm
Overhang: pile face to cap edge	olap=150 mm
Length of pilecap	lx=2100 mm
Width of pilecap	ly=750 mm
Char yield strength of reinft.	fyk=500 N/mm²
Cover to underside of main bars	Cover=150 mm
Side and top cover to main bars	SCover=75 mm
Chosen depth of pilecap	h=1000 mm

Design of main reinforcement

Main steel diameter	dia=16 mm
Main steel spacing	Space=65 mm
Distribution steel diameter	LSize=12 mm
Spacing of bars	LSpac=75 mm

Check shear resistance

Shear force due to ultimate load	VEd=N/2=900 kN
Shear resistance	VRdc=beta'*CRdc*ks*vRdc*bw*d/1000 =943.67 kN

SHEAR SUMMARY	**Shear force**	**900 kN**
	Shear resistance	**943.67 kN**

Hence section is satisfactory, no shear reinforcement is required.

Check punching shear at column face

Check punching shear at column face:

Eccentricity factor β	beta=1
Shear stress at column perimeter	vEd=beta*VEd*1000/(uo*d)=1.0689 N/mm²
Maximum punching shear resistance	vRdmax=0.5*v*fcd=5.5808 N/mm²

Shear stress at column perimeter is within the maximum punching shear resistance, hence satisfactory.

MAIN REINFORCEMENT SUMMARY	**Characteristic strength**	**500 N/mm²**
	Diameter of bars	**16 mm**
	Number of bars	**9**
	Spacing	**65 mm**
	Area required	**1683.4 mm²**
	Area provided	**1809.6 mm²**
DISTRIBUTION REINFORCEMENT SUMMARY	**Characteristic strength**	**500 N/mm²**
	Diameter of bars	**12 mm**
	Number of bars	**27**
	Spacing of bars	**75 mm**
	Area required	**1500 mm²/m**
	Area provided	**1508 mm²/m**
TOP BARS SUMMARY	**Characteristic strength**	**500 N/mm²**
	Diameter of bars	**12 mm**
	Number of bars	**9**
	Spacing of bars	**75 mm**
SIDE BARS SUMMARY	**Characteristic strength**	**500 N/mm²**
	Diameter of bars	**12 mm**
	Number of bars/side	**4**
	Spacing of bars	**250 mm**
QUANTITIES	**Total concrete volume**	**1.575 m³**
	Total area of formwork	**5.7 m²**

Location: Ex1 - Typical pilecap

Design to BS8110(1997) with partial safety factor for steel gammaS=1.15
Bottom layer of main steel is assumed to run in X-direction.

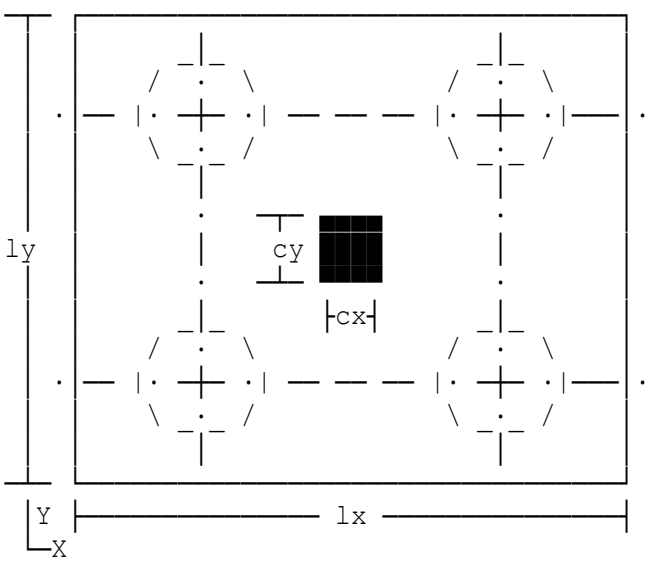

Pilecap for four piles

Designed by Truss Analogy. Calculations are in accordance with BS8110.

Pilecap assumed square (i.e. lx=ly) with main reinforcement arranged in bands parallel to principal axes and symmetrical about pile centres (i.e. chain lines in adjoining diagram). For bond calculations. any high-yield bars are assumed Type 2:deformed.

Total ultimate load on column	N=5600 kN
Column dimension cx	cx=500 mm
Column dimension cy	cy=500 mm
Nominal pile diameter	PileD=450 mm
Spc.of pile ctrs in X-direction	AX=1350 mm
Overhang: pile face to cap edge	olap=150 mm
Length of pilecap	lx=2100 mm
Spc.of pile ctrs in Y-direction	AY=1350 mm
Breadth of pilecap	ly=2100 mm
Concrete grade	fcu=35 N/mm²
Steel strength	fy=500 N/mm²
Cover to underside of main bars	Cover=150 mm
Side and top cover to main bars	Scvr=75 mm
Chosen depth of pilecap	h=820 mm

Design of main steel in X-direction

Main steel diameter	diaX=16 mm
Main steel spacing	SpcX=55 mm

Design of main steel in Y-direction

Main steel diameter	diaY=16 mm
Main steel spacing	SpcY=55 mm

Distribution steel

Diameter of bar	LSize=12 mm
Spacing of bars	LSpac=105 mm

MAIN REINFORCEMENT	**Characteristic strength**	**500 N/mm²**
IN X-DIRECTION:	**Diameter of bars**	**16 mm**
SUMMARY	**Spacing**	**55 mm**
	Total number of bars	**36**
	Total area required	**6687.7 mm²**
	Total area provided	**7238.2 mm²**
	Volume of steel	**18986 cm³**
	Weight of steel	**149.04 kg**
MAIN REINFORCEMENT	**Characteristic strength**	**500 N/mm²**
IN Y-DIRECTION:	**Diameter of bars**	**16 mm**
SUMMARY	**Spacing**	**55 mm**
	Total number of bars	**36**
	Total area required	**6856.5 mm²**
	Total area provided	**7238.2 mm²**
	Volume of steel	**18950 cm³**
	Weight of steel	**148.76 kg**
DISTRIBUTION REINFORCEMENT	**Characteristic strength**	**500 N/mm²**
SUMMARY	**Diameter of bars**	**12 mm**
IN X-DIRECTION:		
In top:	**Number of bars**	**19**
	Spacing of bars	**105 mm**
	Area required	**1066 mm²/m**
	Area provided	**1077.1 mm²/m**
	Volume of steel	**4190.3 cm³**
	Weight of steel	**32.894 kg**
In bottom:	**No distribution bars required**	
IN Y-DIRECTION:		
In top:	**Number of bars**	**19**
	Spacing of bars	**105 mm**
	Area required	**1066 mm²/m**
	Area provided	**1077.1 mm²/m**
	Volume of steel	**4190.3 cm³**
	Weight of steel	**32.894 kg**
In bottom:	**No distribution bars required**	
SIDE BARS SUMMARY	**Characteristic strength**	**500 N/mm²**
	Diameter of bars	**12 mm**
	Total number of bars	**6**
	Spacing of bars	**250 mm**
	Volume of steel	**2995.9 cm³**
	Weight of steel	**23.518 kg**
QUANTITIES	**Total volume of concrete needed**	**3.6162 m³**
	Total area of formwork	**6.888 m²**
	Total volume of steel	**49312 cm³**
	Total weight of steel	**387.1 kg**
	Approx.self-weight of pilecap	**121.5 kN**
	Approx.total load on each pile	**1431 kN**

Location: Ex2 - Large, heavily-loaded pilecap w. mild steel reinf.

Design to BS8110(1997) with partial safety factor for steel gammaS=1.15
Bottom layer of main steel is assumed to run in X-direction.

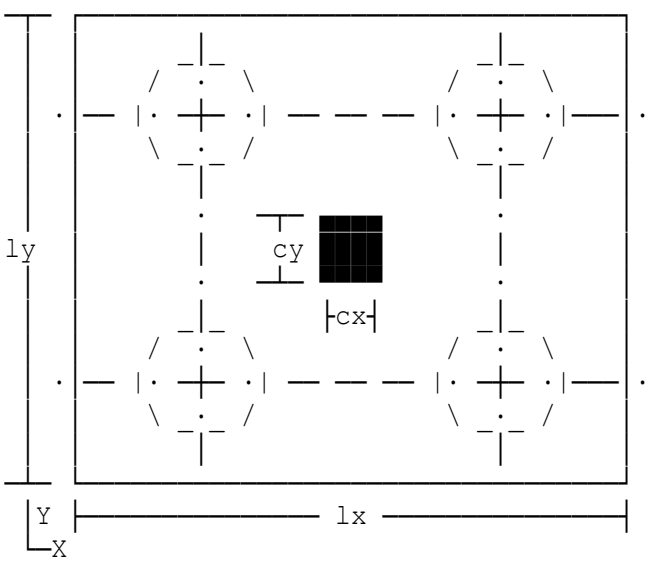

Pilecap for four piles

Designed by Truss Analogy. Calculations are in accordance with BS8110.

Pilecap assumed square (i.e. lx=ly) with main reinforcement arranged in bands parallel to principal axes and symmetrical about pile centres (i.e. chain lines in adjoining diagram). For bond calculations. any high-yield bars are assumed Type 2:deformed.

Total ultimate load on column	N=10000 kN
Column dimension cx	cx=500 mm
Column dimension cy	cy=500 mm
Nominal pile diameter	PileD=450 mm
Spc.of pile ctrs in X-direction	AX=1350 mm
Overhang: pile face to cap edge	olap=725 mm
Length of pilecap	lx=3250 mm
Spc.of pile ctrs in Y-direction	AY=1350 mm
Breadth of pilecap	ly=3250 mm
Concrete grade	fcu=25 N/mm²
Steel strength	fy=250 N/mm²
Cover to underside of main bars	Cover=150 mm
Side and top cover to main bars	Scvr=75 mm
Chosen depth of pilecap	h=1440 mm

Design of main steel in X-direction

Main steel diameter	diaX=16 mm
Main steel spacing	SpcX=50 mm

Design of main steel in Y-direction

Main steel diameter	diaY=16 mm
Main steel spacing	SpcY=50 mm

Distribution steel

Diameter of bar	LSize=20 mm
Spacing of bars	LSpac=90 mm

MAIN REINFORCEMENT	**Characteristic strength**	**250 N/mm²**
IN X-DIRECTION:	**Diameter of bars**	**16 mm**
SUMMARY	**Spacing**	**50 mm**
	Total number of bars	**62**
	Total area required	**12224 mm²**
	Total area provided	**12466 mm²**
	Volume of steel	**49564 cm³**
	Weight of steel	**389.08 kg**
MAIN REINFORCEMENT	**Characteristic strength**	**250 N/mm²**
IN Y-DIRECTION:	**Diameter of bars**	**16 mm**
SUMMARY	**Spacing**	**50 mm**
	Total number of bars	**62**
	Total area required	**12380 mm²**
	Total area provided	**12466 mm²**
	Volume of steel	**49564 cm³**
	Weight of steel	**389.08 kg**
DISTRIBUTION REINFORCEMENT	**Characteristic strength**	**250 N/mm²**
SUMMARY	**Diameter of bars**	**20 mm**
IN X-DIRECTION:		
In top:	**Number of bars**	**35**
	Spacing of bars	**90 mm**
	Area required	**3456 mm²/m**
	Area provided	**3490.7 mm²/m**
	Volume of steel	**34086 cm³**
	Weight of steel	**267.58 kg**
In bottom:	**No distribution bars required**	
IN Y-DIRECTION:		
In top:	**Number of bars**	**35**
	Spacing of bars	**90 mm**
	Area required	**3456 mm²/m**
	Area provided	**3490.7 mm²/m**
	Volume of steel	**34086 cm³**
	Weight of steel	**267.58 kg**
In bottom:	**No distribution bars required**	
SIDE BARS SUMMARY	**Characteristic strength**	**250 N/mm²**
	Diameter of bars	**12 mm**
	Total number of bars	**10**
	Spacing of bars	**250 mm**
	Volume of steel	**7617.1 cm³**
	Weight of steel	**59.794 kg**
QUANTITIES	**Total volume of concrete needed**	**15.21 m³**
	Total area of formwork	**18.72 m²**
	Total volume of steel	**174918 cm³**
	Total weight of steel	**1373.1 kg**
	Approx.self-weight of pilecap	**511.06 kN**
	Approx.total load on each pile	**2628 kN**

Location: Ex3 - Small cap with closely-spaced piles

Design to BS8110(1997) with partial safety factor for steel gammaS=1.15
Bottom layer of main steel is assumed to run in X-direction.

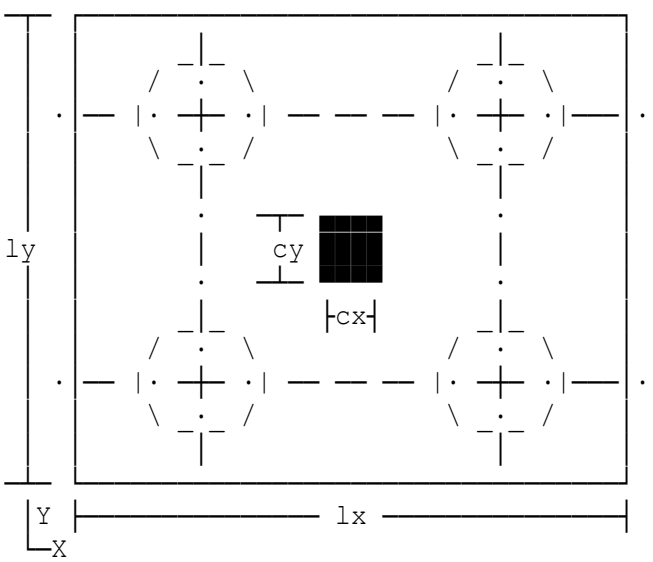

Pilecap for four piles

Designed by Truss Analogy. Calculations are in accordance with BS8110.

Pilecap assumed square (i.e. lx=ly) with main reinforcement arranged in bands parallel to principal axes and symmetrical about pile centres (i.e. chain lines in adjoining diagram). For bond calculations. any high-yield bars are assumed Type 2:deformed.

Total ultimate load on column	N=5600 kN
Column dimension cx	cx=350 mm
Column dimension cy	cy=350 mm
Nominal pile diameter	PileD=250 mm
Spc.of pile ctrs in X-direction	AX=750 mm
Overhang: pile face to cap edge	olap=150 mm
Length of pilecap	lx=1300 mm
Spc.of pile ctrs in Y-direction	AY=750 mm
Breadth of pilecap	ly=1300 mm
Concrete grade	fcu=60 N/mm²
Steel strength	fy=500 N/mm²
Cover to underside of main bars	Cover=150 mm
Side and top cover to main bars	Scvr=75 mm
Chosen depth of pilecap	h=990 mm

Design of main steel in X-direction

Main steel diameter	diaX=25 mm
Main steel spacing	SpcX=275 mm

Design of main steel in Y-direction

Main steel diameter	diaY=20 mm
Main steel spacing	SpcY=135 mm

Distribution steel

Diameter of bar	LSize=16 mm
Spacing of bars	LSpac=155 mm

MAIN REINFORCEMENT	**Characteristic strength**	**500 N/mm²**
IN X-DIRECTION:	**Diameter of bars**	**25 mm**
SUMMARY	**Spacing**	**275 mm**
	Total number of bars	**6**
	Total area required	**2945.1 mm²**
	Total area provided	**2945.2 mm²**
	Volume of steel	**6538.4 cm³**
	Weight of steel	**51.327 kg**
MAIN REINFORCEMENT	**Characteristic strength**	**500 N/mm²**
IN Y-DIRECTION:	**Diameter of bars**	**20 mm**
SUMMARY	**Spacing**	**135 mm**
	Total number of bars	**10**
	Total area required	**3037.7 mm²**
	Total area provided	**3141.6 mm²**
	Volume of steel	**7052.9 cm³**
	Weight of steel	**55.365 kg**
DISTRIBUTION REINFORCEMENT	**Characteristic strength**	**500 N/mm²**
SUMMARY	**Diameter of bars**	**16 mm**
IN X-DIRECTION:		
In top:	**Number of bars**	**8**
	Spacing of bars	**155 mm**
	Area required	**1287 mm²/m**
	Area provided	**1297.2 mm²/m**
	Volume of steel	**1849.8 cm³**
	Weight of steel	**14.521 kg**
In bottom:	**No distribution bars required**	
IN Y-DIRECTION:		
In top:	**Number of bars**	**8**
	Spacing of bars	**155 mm**
	Area required	**1287 mm²/m**
	Area provided	**1297.2 mm²/m**
	Volume of steel	**1849.8 cm³**
	Weight of steel	**14.521 kg**
In bottom:	**No distribution bars required**	
SIDE BARS SUMMARY	**Characteristic strength**	**500 N/mm²**
	Diameter of bars	**12 mm**
	Total number of bars	**8**
	Spacing of bars	**250 mm**
	Volume of steel	**2474.6 cm³**
	Weight of steel	**19.425 kg**
QUANTITIES	**Total volume of concrete needed**	**1.6731 m³**
	Total area of formwork	**5.148 m²**
	Total volume of steel	**19765 cm³**
	Total weight of steel	**155.16 kg**
	Approx.self-weight of pilecap	**56.216 kN**
	Approx.total load on each pile	**1415 kN**

Location: Ex1 - Typical pilecap

Bottom layer of main steel is assumed to run in the X-direction.

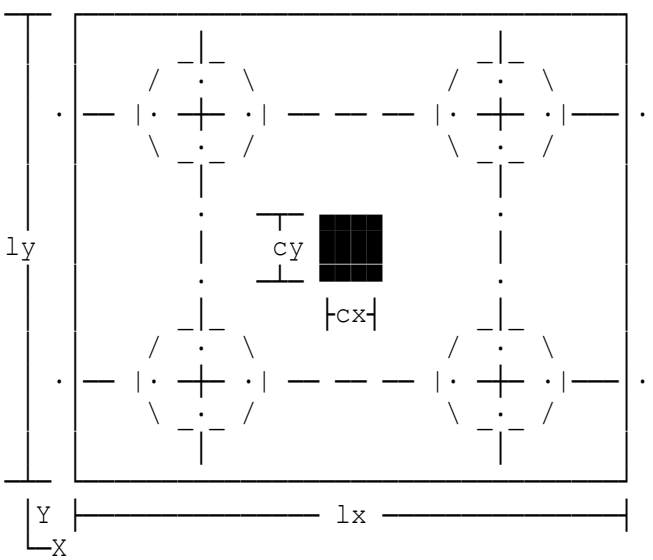

Pilecap for four piles

Designed by truss-analogy to EC2 Part 1-1.

Pilecap assumed square (i.e. lx=ly) with main reinforcement arranged in bands parallel to the principal axes and symmetrical about pile centres.

Ultimate load & moment values to be used.

Total design load on column	N=2800 kN
Column dimension cx	cx=500 mm
Column dimension cy	cy=500 mm
Nominal pile diameter	PileD=450 mm
Spc.of pile ctrs in X-direction	AX=1350 mm
Overhang: pile face to cap edge	olap=150 mm
Length of pilecap	lx=2100 mm
Spc.of pile ctrs in Y-direction	AY=1350 mm
Breadth of pilecap	ly=2100 mm
Char yield strength of reinft.	fyk=500 N/mm²
Cover to underside of main bars	Cover=150 mm
Side and top cover to main bars	Scvr=75 mm
Chosen depth of pilecap	h=1000 mm

Design of main steel in X-direction

Main steel diameter	diaX=12 mm
Main steel spacing	SpcX=70 mm

Design of main steel in Y-direction

Main steel diameter	diaY=12 mm
Main steel spacing	SpcY=70 mm

Distribution steel

Distribution steel diameter	LSize=12 mm
Spacing of bars	LSpac=75 mm

Check shear resistance in X-direction

Shear force due to ultimate load VEd=N/2=1400 kN

Shear resistance VRdc=beta'*CRdc*ks*vRdc*bw*d/1000
=2261.8 kN
Modified shear resistance VRdc=VRdm=2544.7 kN

SHEAR SUMMARY Shear force 1400 kN
Shear resistance 2544.7 kN

Hence section is satisfactory, no shear reinforcement is required.

Check shear resistance in Y-direction

Shear force due to ultimate load VEd=N/2=1400 kN
Shear resistance VRdc=beta'*CRdc*ks*vRdc*bw*d/1000
=2245.6 kN
Modified shear resistance VRdc=VRdm=2517.4 kN

SHEAR SUMMARY Shear force 1400 kN
Shear resistance 2517.4 kN

Hence section is satisfactory, no shear reinforcement is required.

Check punching shear

Check punching shear at column face:
Eccentricity factor β beta=1
Shear stress at column perimeter vEd=beta*VEd*1000/(uo*d)=1.6827 N/mm²
Maximum punching shear resistance vRdmax=0.5*v*fcd=5.5808 N/mm²
Shear stress at column perimeter is within the maximum punching shear resistance, hence satisfactory.

Check strength of struts and nodes - Clauses 6.5.2(2) and 6.5.4(4)

Case 1: X-Direction
Strength of concrete strut:
Strut compressive stress Sstr=Cstr*1000/(cy*Wstr)=4.5907 N/mm²
Design strength of conc. strut SRdmax=0.6*(1-fck/250)*fcd
=9.4874 N/mm²
The strut compressive stress is ≤ the strut design strength, hence OK.
Strength of upper strut node:
Stress on horizontal plane SEd1=0.25*N*1000/(cx/2*cy)=5.6 N/mm²
Stress on vertical plane SEd2=Cstr*1000*AX/(2*Lstr*comp)
=3.5819 N/mm²
Strength of compression node SRdmax=(1-fck/250)*fcd=15.812 N/mm²
The stress in horizontal and vertical planes is satisfactory.
Strength of lower strut node:
Stress in strut SEd1=Sstr=4.5907 N/mm²
Stress in pile SEd2=0.25*N*1000/((PileD)^2*PI/4)
=4.4013 N/mm²
Strength of compression node SRdmax=0.85*(1-fck/250)*fcd
=13.44 N/mm²
The stress in strut and pile is satisfactory.

MAIN REINFORCEMENT	**Characteristic strength**	**500 N/mm²**
IN X-DIRECTION:	**Diameter of bars**	**12 mm**
SUMMARY	**Spacing**	**70 mm**
	Total number of bars	**28**
	Total area required	**3150 mm²**
	Total area provided	**3166.7 mm²**
MAIN REINFORCEMENT	**Characteristic strength**	**500 N/mm²**
IN Y-DIRECTION:	**Diameter of bars**	**12 mm**
SUMMARY	**Spacing**	**70 mm**
	Total number of bars	**28**
	Total area required	**3150 mm²**
	Total area provided	**3166.7 mm²**
DISTRIBUTION REINFORCEMENT	**Characteristic strength**	**500 N/mm²**
SUMMARY	**Diameter of bars**	**12 mm**
IN X-DIRECTION:		
In top:	**Number of bars**	**26**
	Spacing of bars	**75 mm**
	Area required	**1500 mm²/m**
	Area provided	**1508 mm²/m**
In bottom:	**No distribution bars required**	
IN Y-DIRECTION:		
In top:	**Number of bars**	**26**
	Spacing of bars	**75 mm**
	Area required	**1500 mm²/m**
	Area provided	**1508 mm²/m**
In bottom:	**No distribution bars required**	
SIDE BARS SUMMARY	**Characteristic strength**	**500 N/mm²**
	Diameter of bars	**12 mm**
	Total number of bars	**8**
	Spacing of bars	**250 mm**
QUANTITIES	**Total concrete volume**	**4.41 m³**
	Total area of formwork	**8.4 m²**

Location: Ex2 - Large, heavily-loaded pilecap w. mild steel reinf.

Bottom layer of main steel is assumed to run in the X-direction.

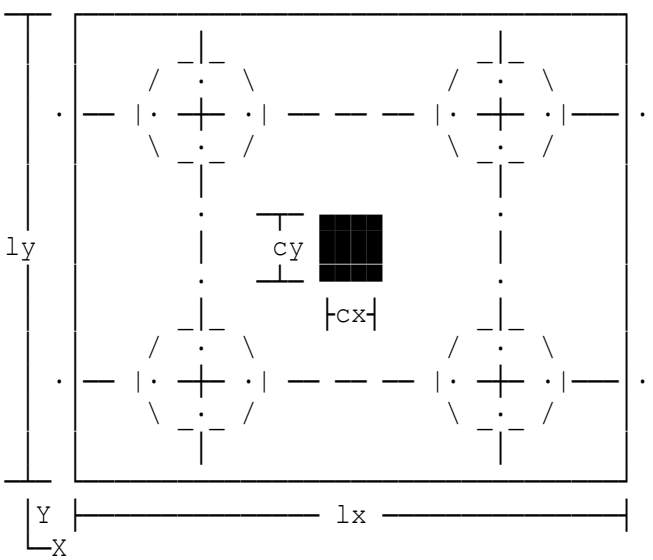

Pilecap for four piles

Designed by truss-analogy to EC2 Part 1-1.

Pilecap assumed square (i.e. lx=ly) with main reinforcement arranged in bands parallel to the principal axes and symmetrical about pile centres.

Ultimate load & moment values to be used.

Total design load on column	N=9000 kN
Column dimension cx	cx=500 mm
Column dimension cy	cy=500 mm
Nominal pile diameter	PileD=450 mm
Spc.of pile ctrs in X-direction	AX=1350 mm
Overhang: pile face to cap edge	olap=725 mm
Length of pilecap	lx=3250 mm
Spc.of pile ctrs in Y-direction	AY=1350 mm
Breadth of pilecap	ly=3250 mm
Char yield strength of reinft.	fyk=500 N/mm²
Cover to underside of main bars	Cover=150 mm
Side and top cover to main bars	Scvr=75 mm
Chosen depth of pilecap	h=1460 mm

Design of main steel in X-direction

Main steel diameter	diaX=16 mm
Main steel spacing	SpcX=90 mm

Design of main steel in Y-direction

Main steel diameter	diaY=16 mm
Main steel spacing	SpcY=90 mm

Distribution steel

Distribution steel diameter	LSize=25 mm
Spacing of bars	LSpac=220 mm

Check shear resistance in X-direction

Shear force due to ultimate load VEd=N/2=4500 kN

Shear resistance VRdc=beta'*CRdc*ks*vRdc*bw*d/1000
=4588.9 kN
Modified shear resistance VRdc=VRdm=4864.3 kN

SHEAR SUMMARY	**Shear force**	**4500 kN**
	Shear resistance	**4864.3 kN**

Hence section is satisfactory, no shear reinforcement is required.

Check shear resistance in Y-direction

Shear force due to ultimate load VEd=N/2=4500 kN
Shear resistance VRdc=beta'*CRdc*ks*vRdc*bw*d/1000
=4559.2 kN
Modified shear resistance VRdc=VRdm=4817.1 kN

SHEAR SUMMARY	**Shear force**	**4500 kN**
	Shear resistance	**4817.1 kN**

Hence section is satisfactory, no shear reinforcement is required.

Check punching shear

Check punching shear at column face:
Eccentricity factor β beta=1
Shear stress at column perimeter vEd=beta*VEd*1000/(uo*d)=3.4992 N/mm²
Maximum punching shear resistance vRdmax=0.5*v*fcd=4.5 N/mm²
Shear stress at column perimeter is within the maximum punching shear resistance, hence satisfactory.

MAIN REINFORCEMENT	**Characteristic strength**	**500 N/mm²**
IN X-DIRECTION:	**Diameter of bars**	**16 mm**
SUMMARY	**Spacing**	**90 mm**
	Total number of bars	**36**
	Total area required	**7117.5 mm²**
	Total area provided	**7238.2 mm²**
MAIN REINFORCEMENT	**Characteristic strength**	**500 N/mm²**
IN Y-DIRECTION:	**Diameter of bars**	**16 mm**
SUMMARY	**Spacing**	**90 mm**
	Total number of bars	**36**
	Total area required	**7117.5 mm²**
	Total area provided	**7238.2 mm²**
DISTRIBUTION REINFORCEMENT	**Characteristic strength**	**500 N/mm²**
SUMMARY	**Diameter of bars**	**25 mm**
IN X-DIRECTION:		
In top:	**Number of bars**	**14**
	Spacing of bars	**220 mm**
	Area required	**2190 mm²/m**
	Area provided	**2231.2 mm²/m**
In bottom:	**No distribution bars required**	

IN Y-DIRECTION:		
In top:	**Number of bars**	**14**
	Spacing of bars	**220 mm**
	Area required	**2190 mm²/m**
	Area provided	**2231.2 mm²/m**
In bottom:	**No distribution bars required**	
SIDE BARS SUMMARY	**Characteristic strength**	**500 N/mm²**
	Diameter of bars	**12 mm**
	Total number of bars	**10**
	Spacing of bars	**250 mm**
QUANTITIES	**Total concrete volume**	**15.421 m³**
	Total area of formwork	**18.98 m²**

Location: Ex3 - Small cap with closely-spaced piles

Bottom layer of main steel is assumed to run in the X-direction.

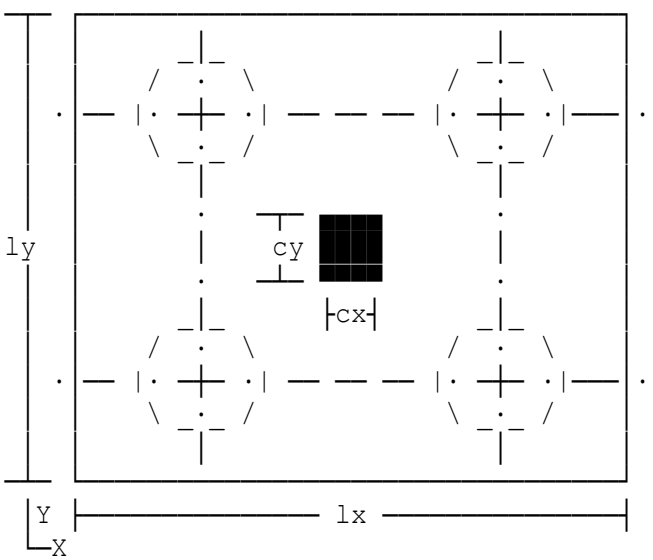

Pilecap for four piles

Designed by truss-analogy to EC2 Part 1-1.

Pilecap assumed square (i.e. lx=ly) with main reinforcement arranged in bands parallel to the principal axes and symmetrical about pile centres.

Ultimate load & moment values to be used.

Total design load on column	N=3600 kN
Column dimension cx	cx=350 mm
Column dimension cy	cy=350 mm
Nominal pile diameter	PileD=250 mm
Spc.of pile ctrs in X-direction	AX=750 mm
Overhang: pile face to cap edge	olap=150 mm
Length of pilecap	lx=1300 mm
Spc.of pile ctrs in Y-direction	AY=750 mm
Breadth of pilecap	ly=1300 mm
Char yield strength of reinft.	fyk=500 N/mm²
Cover to underside of main bars	Cover=150 mm
Side and top cover to main bars	Scvr=75 mm
Chosen depth of pilecap	h=990 mm

Design of main steel in X-direction

Main steel diameter	diaX=12 mm
Main steel spacing	SpcX=60 mm

Design of main steel in Y-direction

Main steel diameter	diaY=12 mm
Main steel spacing	SpcY=60 mm

Distribution steel

Distribution steel diameter	LSize=20 mm
Spacing of bars	LSpac=180 mm

Check shear resistance in X-direction

Shear force due to ultimate load VEd=N/2=1800 kN

Shear resistance VRdc=beta'*CRdc*ks*vRdc*bw*d/1000
=1693.9 kN
Modified shear resistance VRdc=VRdm=1951.5 kN

SHEAR SUMMARY	**Shear force**	**1800 kN**
	Shear resistance	**1951.5 kN**

Hence section is satisfactory, no shear reinforcement is required.

Check shear resistance in Y-direction

Shear force due to ultimate load VEd=N/2=1800 kN
Shear resistance VRdc=beta'*CRdc*ks*vRdc*bw*d/1000
=1681.7 kN
Modified shear resistance VRdc=VRdm=1930.3 kN

SHEAR SUMMARY	**Shear force**	**1800 kN**
	Shear resistance	**1930.3 kN**

Hence section is satisfactory, no shear reinforcement is required.

Check punching shear

Check punching shear at column face:
Eccentricity factor β beta=1
Shear stress at column perimeter vEd=beta*VEd*1000/(uo*d)=3.1283 N/mm²
Maximum punching shear resistance vRdmax=0.5*v*fcd=8 N/mm²
Shear stress at column perimeter is within the maximum punching shear resistance, hence satisfactory.

MAIN REINFORCEMENT	**Characteristic strength**	**500 N/mm²**
IN X-DIRECTION:	**Diameter of bars**	**12 mm**
SUMMARY	**Spacing**	**60 mm**
	Total number of bars	**20**
	Total area required	**2257 mm²**
	Total area provided	**2261.9 mm²**
MAIN REINFORCEMENT	**Characteristic strength**	**500 N/mm²**
IN Y-DIRECTION:	**Diameter of bars**	**12 mm**
SUMMARY	**Spacing**	**60 mm**
	Total number of bars	**20**
	Total area required	**2224 mm²**
	Total area provided	**2261.9 mm²**
DISTRIBUTION REINFORCEMENT	**Characteristic strength**	**500 N/mm²**
SUMMARY	**Diameter of bars**	**20 mm**
IN X-DIRECTION:		
In top:	**Number of bars**	**7**
	Spacing of bars	**180 mm**
	Area required	**1736.1 mm²/m**
	Area provided	**1745.3 mm²/m**
In bottom:	**No distribution bars required**	

IN Y-DIRECTION:		
In top:	**Number of bars**	**7**
	Spacing of bars	**180 mm**
	Area required	**1736.1 mm²/m**
	Area provided	**1745.3 mm²/m**
In bottom:	**No distribution bars required**	
SIDE BARS SUMMARY	**Characteristic strength**	**500 N/mm²**
	Diameter of bars	**12 mm**
	Total number of bars	**8**
	Spacing of bars	**250 mm**
QUANTITIES	**Total concrete volume**	**1.6731 m³**
	Total area of formwork	**5.148 m²**

Location: Ex1 - Typical pilecap

Design to BS8110(1997) with partial safety factor for steel gammaS=1.15
Bottom layer of main steel is assumed to run in X-direction.

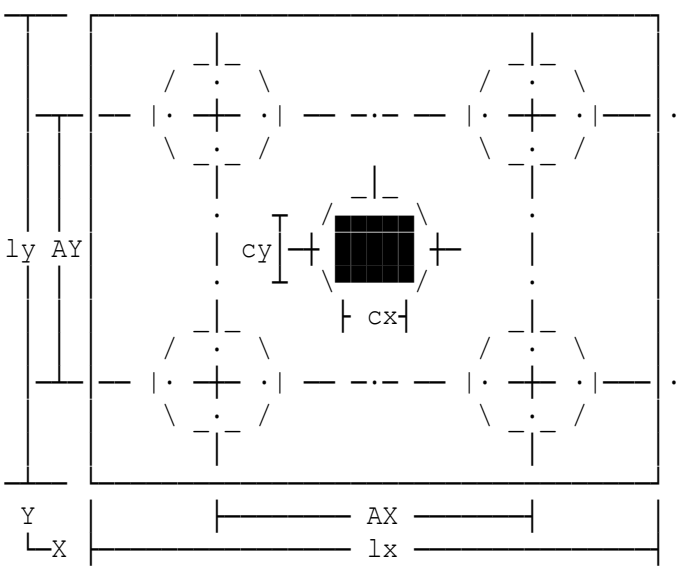

Pilecap for five piles

Designed by Truss Analogy
Calculations are in
accordance with BS8110.

Pilecap assumed square
(i.e. lx=ly) with main
reinforcement arranged
in bands parallel to
principal axes and
symmetrical about pile
centres (i.e. chain
lines in diagram).
For bond calculations,
any high-yield bars are
assumed Type 2:deformed.

Total ultimate load on column	N=7000 kN
Column dimension cx	cx=500 mm
Column dimension cy	cy=500 mm
Nominal pile diameter	PileD=450 mm
Spec.min.spacing of pile centres	spc=1350 mm
Spc.of pile ctrs in X-direction	AX=1910 mm
Overhang: pile face to cap edge	olap=150 mm
Length of pilecap	lx=2660 mm
Spc.of pile ctrs in Y-direction	AY=1910 mm
Breadth of pilecap	ly=2660 mm
Concrete grade	fcu=35 N/mm²
Steel strength	fy=500 N/mm²
Cover to underside of main bars	Cover=150 mm
Side and top cover to main bars	Scvr=75 mm
Chosen depth of pilecap	h=1340 mm

Design of main steel in X-direction

Main steel diameter	diaX=16 mm
Main steel spacing	SpcX=70 mm

Design of main steel in Y-direction

Main steel diameter	diaY=16 mm
Main steel spacing	SpcY=70 mm

Distribution steel

Diameter of bar	LSize=20 mm
Spacing of bars	LSpac=180 mm

MAIN REINFORCEMENT	**Characteristic strength**	**500 N/mm²**
IN X-DIRECTION:	**Diameter of bars**	**16 mm**
SUMMARY	**Spacing**	**70 mm**
	Total number of bars	**28**
	Total area required	**5256.6 mm²**
	Total area provided	**5629.7 mm²**
	Volume of steel	**23774 cm³**
	Weight of steel	**186.63 kg**
MAIN REINFORCEMENT	**Characteristic strength**	**500 N/mm²**
IN Y-DIRECTION:	**Diameter of bars**	**16 mm**
SUMMARY	**Spacing**	**70 mm**
	Total number of bars	**28**
	Total area required	**5329.5 mm²**
	Total area provided	**5629.7 mm²**
	Volume of steel	**23746 cm³**
	Weight of steel	**186.41 kg**
DISTRIBUTION REINFORCEMENT	**Characteristic strength**	**500 N/mm²**
SUMMARY	**Diameter of bars**	**20 mm**
IN X-DIRECTION:		
In top:	**Number of bars**	**14**
	Spacing of bars	**180 mm**
	Area required	**1742 mm²/m**
	Area provided	**1745.3 mm²/m**
	Volume of steel	**11040 cm³**
	Weight of steel	**86.661 kg**
In bottom:	**Number of bars**	**3**
	Spacing of bars	**160 mm**
	Volume of steel	**2365.6 cm³**
	Weight of steel	**18.57 kg**
IN Y-DIRECTION:		
In top:	**Number of bars**	**14**
	Spacing of bars	**180 mm**
	Area required	**1742 mm²/m**
	Area provided	**1745.3 mm²/m**
	Volume of steel	**11040 cm³**
	Weight of steel	**86.661 kg**
In bottom:	**Number of bars**	**3**
	Spacing of bars	**160 mm**
	Volume of steel	**2365.6 cm³**
	Weight of steel	**18.57 kg**
SIDE BARS SUMMARY	**Characteristic strength**	**500 N/mm²**
	Diameter of bars	**12 mm**
	Total number of bars	**10**
	Spacing of bars	**250 mm**
	Volume of steel	**6259.9 cm³**
	Weight of steel	**49.141 kg**

QUANTITIES	**Total volume of concrete needed**	**9.4813 m³**
	Total area of formwork	**14.258 m²**
	Total volume of steel	**80591 cm³**
	Total weight of steel	**632.64 kg**
	Approx.self-weight of pilecap	**318.57 kN**
	Approx.total load on each pile	**1464 kN**

Location: Ex2 - Heavily-loaded pilecap reinforced with mild steel

Design to BS8110(1997) with partial safety factor for steel gammaS=1.15
Bottom layer of main steel is assumed to run in X-direction.

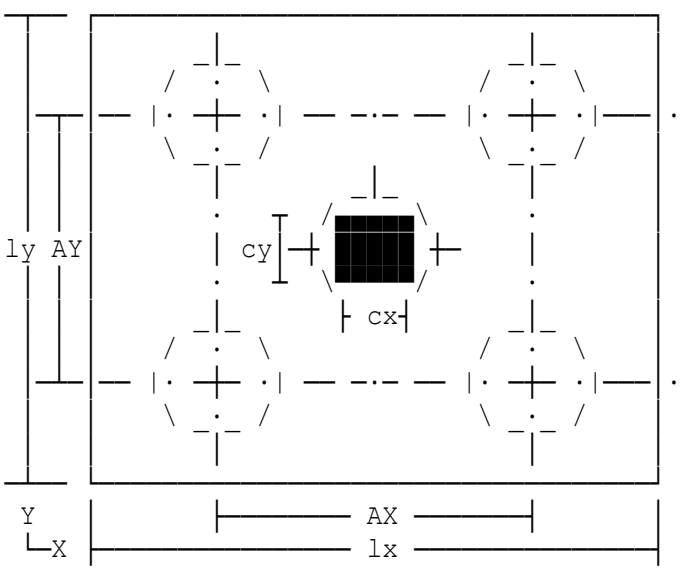

Pilecap for five piles

Designed by Truss Analogy
Calculations are in
accordance with BS8110.

Pilecap assumed square
(i.e. lx=ly) with main
reinforcement arranged
in bands parallel to
principal axes and
symmetrical about pile
centres (i.e. chain
lines in diagram).
For bond calculations,
any high-yield bars are
assumed Type 2:deformed.

Total ultimate load on column	N=12500 kN
Column dimension cx	cx=500 mm
Column dimension cy	cy=500 mm
Nominal pile diameter	PileD=500 mm
Spec.min.spacing of pile centres	spc=1350 mm
Spc.of pile ctrs in X-direction	AX=1910 mm
Overhang: pile face to cap edge	olap=700 mm
Length of pilecap	lx=3810 mm
Spc.of pile ctrs in Y-direction	AY=1910 mm
Breadth of pilecap	ly=3810 mm
Concrete grade	fcu=25 N/mm²
Steel strength	fy=250 N/mm²
Cover to underside of main bars	Cover=150 mm
Side and top cover to main bars	Scvr=75 mm
Chosen depth of pilecap	h=1720 mm

Design of main steel in X-direction

Main steel diameter	diaX=16 mm
Main steel spacing	SpcX=40 mm

Design of main steel in Y-direction

Main steel diameter	diaY=16 mm
Main steel spacing	SpcY=40 mm

Distribution steel

Diameter of bar	LSize=40 mm
Spacing of bars	LSpac=300 mm

MAIN REINFORCEMENT	**Characteristic strength**	**250 N/mm²**
IN X-DIRECTION:	**Diameter of bars**	**16 mm**
SUMMARY	**Spacing**	**40 mm**
	Total number of bars	**72**
	Total area required	**14171 mm²**
	Total area provided	**14476 mm²**
	Volume of steel	**74206 cm³**
	Weight of steel	**582.52 kg**
MAIN REINFORCEMENT	**Characteristic strength**	**250 N/mm²**
IN Y-DIRECTION:	**Diameter of bars**	**16 mm**
SUMMARY	**Spacing**	**40 mm**
	Total number of bars	**72**
	Total area required	**14319 mm²**
	Total area provided	**14476 mm²**
	Volume of steel	**74206 cm³**
	Weight of steel	**582.52 kg**
DISTRIBUTION REINFORCEMENT	**Characteristic strength**	**250 N/mm²**
SUMMARY	**Diameter of bars**	**40 mm**
IN X-DIRECTION:		
In top:	**Number of bars**	**13**
	Spacing of bars	**300 mm**
	Area required	**4128 mm²/m**
	Area provided	**4188.8 mm²/m**
	Volume of steel	**59791 cm³**
	Weight of steel	**469.36 kg**
In bottom:	**Number of bars**	**2**
	Spacing of bars	**275 mm**
	Volume of steel	**9198.6 cm³**
	Weight of steel	**72.209 kg**
IN Y-DIRECTION:		
In top:	**Number of bars**	**13**
	Spacing of bars	**300 mm**
	Area required	**4128 mm²/m**
	Area provided	**4188.8 mm²/m**
	Volume of steel	**59791 cm³**
	Weight of steel	**469.36 kg**
In bottom:	**Number of bars**	**2**
	Spacing of bars	**275 mm**
	Volume of steel	**9198.6 cm³**
	Weight of steel	**72.209 kg**
SIDE BARS SUMMARY	**Characteristic strength**	**250 N/mm²**
	Diameter of bars	**12 mm**
	Total number of bars	**12**
	Spacing of bars	**250 mm**
	Volume of steel	**10661 cm³**
	Weight of steel	**83.685 kg**

QUANTITIES	**Total volume of concrete needed**	**24.968 m³**
	Total area of formwork	**26.213 m²**
	Total volume of steel	**297052 cm³**
	Total weight of steel	**2331.9 kg**
	Approx.self-weight of pilecap	**838.91 kN**
	Approx.total load on each pile	**2668 kN**

Location: Ex3 - Small pilecap with high-grade concrete

Design to BS8110(1997) with partial safety factor for steel gammaS=1.15
Bottom layer of main steel is assumed to run in X-direction.

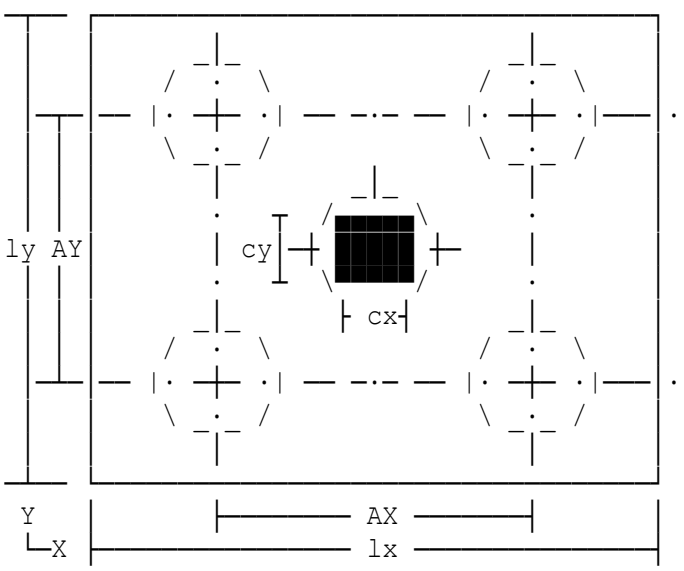

Pilecap for five piles

Designed by Truss Analogy
Calculations are in
accordance with BS8110.

Pilecap assumed square
(i.e. lx=ly) with main
reinforcement arranged
in bands parallel to
principal axes and
symmetrical about pile
centres (i.e. chain
lines in diagram).
For bond calculations,
any high-yield bars are
assumed Type 2:deformed.

Total ultimate load on column	N=7000 kN
Column dimension cx	cx=350 mm
Column dimension cy	cy=350 mm
Nominal pile diameter	PileD=250 mm
Spec.min.spacing of pile centres	spc=500 mm
Spc.of pile ctrs in X-direction	AX=710 mm
Overhang: pile face to cap edge	olap=150 mm
Length of pilecap	lx=1260 mm
Spc.of pile ctrs in Y-direction	AY=710 mm
Breadth of pilecap	ly=1260 mm
Concrete grade	fcu=60 N/mm²
Steel strength	fy=500 N/mm²
Cover to underside of main bars	Cover=150 mm
Side and top cover to main bars	Scvr=75 mm
Chosen depth of pilecap	h=990 mm

Design of main steel in X-direction

Main steel diameter	diaX=16 mm
Main steel spacing	SpcX=85 mm

Design of main steel in Y-direction

Main steel diameter	diaY=12 mm
Main steel spacing	SpcY=45 mm

Distribution steel

Diameter of bar	LSize=16 mm
Spacing of bars	LSpac=155 mm

MAIN REINFORCEMENT	**Characteristic strength**	**500 N/mm²**
IN X-DIRECTION:	**Diameter of bars**	**16 mm**
SUMMARY	**Spacing**	**85 mm**
	Total number of bars	**14**
	Total area required	**2788 mm²**
	Total area provided	**2814.9 mm²**
	Volume of steel	**6341.9 cm³**
	Weight of steel	**49.784 kg**
MAIN REINFORCEMENT	**Characteristic strength**	**500 N/mm²**
IN Y-DIRECTION:	**Diameter of bars**	**12 mm**
SUMMARY	**Spacing**	**45 mm**
	Total number of bars	**26**
	Total area required	**2843.5 mm²**
	Total area provided	**2940.5 mm²**
	Volume of steel	**6810.3 cm³**
	Weight of steel	**53.461 kg**
DISTRIBUTION REINFORCEMENT	**Characteristic strength**	**500 N/mm²**
SUMMARY	**Diameter of bars**	**16 mm**
IN X-DIRECTION:		
In top:	**Number of bars**	**8**
	Spacing of bars	**155 mm**
	Area required	**1287 mm²/m**
	Area provided	**1297.2 mm²/m**
	Volume of steel	**1785.4 cm³**
	Weight of steel	**14.016 kg**
In bottom:	**No distribution bars required**	
IN Y-DIRECTION:		
In top:	**Number of bars**	**8**
	Spacing of bars	**155 mm**
	Area required	**1287 mm²/m**
	Area provided	**1297.2 mm²/m**
	Volume of steel	**1785.4 cm³**
	Weight of steel	**14.016 kg**
In bottom:	**No distribution bars required**	
SIDE BARS SUMMARY	**Characteristic strength**	**500 N/mm²**
	Diameter of bars	**12 mm**
	Total number of bars	**8**
	Spacing of bars	**250 mm**
	Volume of steel	**2375 cm³**
	Weight of steel	**18.644 kg**
QUANTITIES	**Total volume of concrete needed**	**1.5717 m³**
	Total area of formwork	**4.9896 m²**
	Total volume of steel	**19098 cm³**
	Total weight of steel	**149.92 kg**
	Approx.self-weight of pilecap	**52.81 kN**
	Approx.total load on each pile	**1411 kN**

Location: Ex1 - Typical pilecap

Bottom layer of main steel is assumed to run in X-direction.

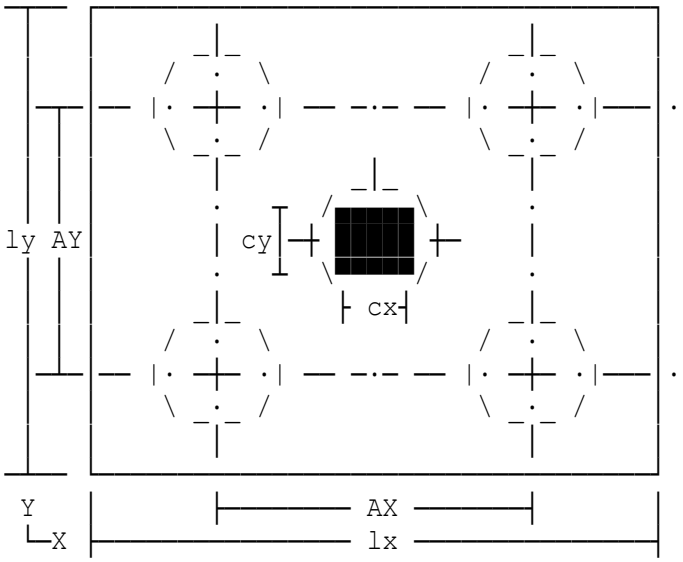

Pilecap for five piles

Designed by truss-analogy to EC2 Part 1-1.

Pilecap assumed square (i.e. lx=ly) with main reinforcement arranged in bands parallel to the principal axes and symmetrical about pile centres.

Ultimate load & moment values to be used.

Total design load on column	N=7000 kN
Column dimension cx	cx=500 mm
Column dimension cy	cy=500 mm
Nominal pile diameter	PileD=450 mm
Min spacing of pile centres	spc=1350 mm
Partial safety factor for steel	gams=1.15
Partial safety factor for conc.	gamc=1.5
Spc.of pile ctrs in X-direction	AX=1910 mm
Overhang: pile face to cap edge	olap=150 mm
Length of pilecap	lx=2660 mm
Spc.of pile ctrs in Y-direction	AY=1910 mm
Breadth of pilecap	ly=2660 mm
Char yield strength of reinft.	fyk=500 N/mm²
Cover to underside of main bars	Cover=150 mm
Side and top cover to main bars	Scvr=75 mm
Chosen depth of pilecap	h=1600 mm

Design of main steel in X-direction

Main steel diameter	diaX=16 mm
Main steel spacing	SpcX=75 mm

Design of main steel in Y-direction

Main steel diameter	diaY=16 mm
Main steel spacing	SpcY=75 mm

Distribution steel

Distribution steel diameter LSize=20 mm
Spacing of bars LSpac=130 mm

Check shear resistance in X-direction

Shear force due to ultimate load VEd=N/2.5=2800 kN
Shear resistance VRdc=beta'*CRdc*ks*vRdc*bw*d/1000
=3372.9 kN
Modified shear resistance VRdc=VRdm=3606.8 kN

SHEAR SUMMARY Shear force 2800 kN
Shear resistance 3606.8 kN

Hence section is satisfactory, no shear reinforcement is required.

Check shear resistance in Y-direction

Shear force due to ultimate load VEd=N/2.5=2800 kN
Shear resistance VRdc=beta'*CRdc*ks*vRdc*bw*d/1000
=3353 kN
Modified shear resistance VRdc=VRdm=3574.9 kN

SHEAR SUMMARY Shear force 2800 kN
Shear resistance 3574.9 kN

Hence section is satisfactory, no shear reinforcement is required.

Check punching shear

Check punching shear at column face:
Eccentricity factor β beta=1
Shear stress at column perimeter vEd=beta*VEd*1000/(uo*d)=1.9635 N/mm²
Maximum punching shear resistance vRdmax=0.5*v*fcd=4.9728 N/mm²
Shear stress at column perimeter is within the maximum punching shear resistance, hence satisfactory.

Check punching shear at 2d:
Shear stress at control perimeter vEd=beta*VEd*1000/(u1*d)=0.7036 N/mm²
Design punching shear resistance vRdc=(0.18/gamc)*k*(100*p1
*fck)^0.333=0.27925 N/mm²
Enhancement factor to be used senh=5.0035
Enhanced punching shear resist. vRdc=senh*vRdc=1.3973 N/mm²
Design punching shear resistance vRdc=senh*0.035*k^1.5*fck^0.5
=1.4933 N/mm²

Check strength of struts and nodes - Clauses 6.5.2(2) and 6.5.4(4)

Case 1: X-Direction
Strength of concrete strut:
Strut compressive stress Sstr=Cstr*1000/(cy*Wstr)=8.0565 N/mm²
Design strength of conc. strut SRdmax=0.6*(1-fck/250)*fcd
=8.4538 N/mm²
The strut compressive stress is ≤ the strut design strength, hence OK.
Strength of upper strut node:

```
Stress on horizontal plane        SEd1=0.20*N*1000/(cx/2*cy)=11.2 N/mm²
Stress on vertical plane          SEd2=Cstr*1000*AX/(2*Lstr*comp)
                                      =4.9124 N/mm²
Strength of compression node      SRdmax=(1-fck/250)*fcd=14.09 N/mm²
The stress in horizontal and vertical planes is satisfactory.
Strength of lower strut node:
Stress in strut                   SEd1=Sstr=8.0565 N/mm²
Stress in pile                    SEd2=0.20*N*1000/((PileD)^2*PI/4)
                                      =8.8026 N/mm²
Strength of compression node      SRdmax=0.85*(1-fck/250)*fcd
                                        =11.976 N/mm²
The stress in strut and pile is satisfactory.
```

MAIN REINFORCEMENT	**Characteristic strength**	**500 N/mm²**
IN X-DIRECTION:	**Diameter of bars**	**16 mm**
SUMMARY	**Spacing**	**75 mm**
	Total number of bars	**26**
	Total area required	**5040 mm²**
	Total area provided	**5227.6 mm²**
MAIN REINFORCEMENT	**Characteristic strength**	**500 N/mm²**
IN Y-DIRECTION:	**Diameter of bars**	**16 mm**
SUMMARY	**Spacing**	**75 mm**
	Total number of bars	**26**
	Total area required	**5040 mm²**
	Total area provided	**5227.6 mm²**
DISTRIBUTION REINFORCEMENT	**Characteristic strength**	**500 N/mm²**
SUMMARY	**Diameter of bars**	**20 mm**
IN X-DIRECTION:		
In top:	**Number of bars**	**20**
	Spacing of bars	**130 mm**
	Area required	**2400 mm²/m**
	Area provided	**2416.6 mm²/m**
In bottom:	**Number of bars**	**5**
	Spacing of bars	**110 mm**
IN Y-DIRECTION:		
In top:	**Number of bars**	**20**
	Spacing of bars	**130 mm**
	Area required	**2400 mm²/m**
	Area provided	**2416.6 mm²/m**
In bottom:	**Number of bars**	**5**
	Spacing of bars	**110 mm**
SIDE BARS SUMMARY	**Characteristic strength**	**500 N/mm²**
	Diameter of bars	**12 mm**
	Total number of bars	**12**
	Spacing of bars	**250 mm**
QUANTITIES	**Total concrete volume**	**11.321 m³**
	Total area of formwork	**17.024 m²**

Location: Ex2 - Heavily-loaded pilecap reinforced with mild steel

Bottom layer of main steel is assumed to run in X-direction.

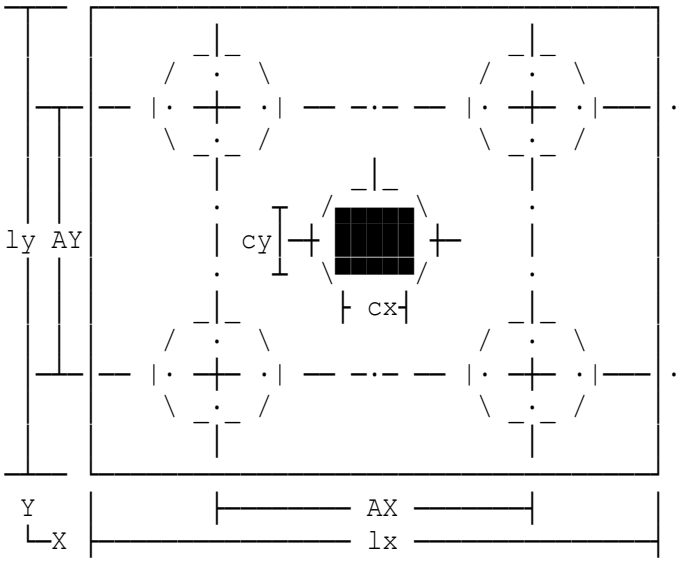

Pilecap for five piles

Designed by truss-analogy to EC2 Part 1-1.

Pilecap assumed square (i.e. lx=ly) with main reinforcement arranged in bands parallel to the principal axes and symmetrical about pile centres.

Ultimate load & moment values to be used.

Total design load on column	N=12500 kN
Column dimension cx	cx=500 mm
Column dimension cy	cy=500 mm
Nominal pile diameter	PileD=500 mm
Min spacing of pile centres	spc=1350 mm
Partial safety factor for steel	gams=1.15
Partial safety factor for conc.	gamc=1.5
Spc.of pile ctrs in X-direction	AX=1910 mm
Overhang: pile face to cap edge	olap=700 mm
Length of pilecap	lx=3810 mm
Spc.of pile ctrs in Y-direction	AY=1910 mm
Breadth of pilecap	ly=3810 mm
Char yield strength of reinft.	fyk=500 N/mm²
Cover to underside of main bars	Cover=150 mm
Side and top cover to main bars	Scvr=75 mm
Chosen depth of pilecap	h=1720 mm

Design of main steel in X-direction

Main steel diameter	diaX=25 mm
Main steel spacing	SpcX=200 mm

Design of main steel in Y-direction

Main steel diameter	diaY=25 mm
Main steel spacing	SpcY=200 mm

Distribution steel

Distribution steel diameter LSize=25 mm
Spacing of bars LSpac=190 mm

Check shear resistance in X-direction

Shear force due to ultimate load VEd=N/2.5=5000 kN
Shear resistance VRdc=beta'*CRdc*ks*vRdc*bw*d/1000
=4916.2 kN
Modified shear resistance VRdc=VRdm=5178 kN

SHEAR SUMMARY	**Shear force**	**5000 kN**
	Shear resistance	**5178 kN**

Hence section is satisfactory, no shear reinforcement is required.

Check shear resistance in Y-direction

Shear force due to ultimate load VEd=N/2.5=5000 kN
Shear resistance VRdc=beta'*CRdc*ks*vRdc*bw*d/1000
=4873.9 kN
Modified shear resistance VRdc=VRdm=5111.3 kN

SHEAR SUMMARY	**Shear force**	**5000 kN**
	Shear resistance	**5111.3 kN**

Hence section is satisfactory, no shear reinforcement is required.

Check punching shear

Check punching shear at column face:
Eccentricity factor β beta=1
Shear stress at column perimeter vEd=beta*VEd*1000/(uo*d)=3.2626 N/mm²
Maximum punching shear resistance vRdmax=0.5*v*fcd=4.5 N/mm²
Shear stress at column perimeter is within the maximum punching shear resistance, hence satisfactory.

Check punching shear at 2d:
Shear stress at control perimeter vEd=beta*VEd*1000/(u1*d)=1.1892 N/mm²
Design punching shear resistance vRdc=(0.18/gamc)*k*(100*p1
*fck)^0.333=0.26418 N/mm²
Enhancement factor to be used senh=5.5225
Enhanced punching shear resist. vRdc=senh*vRdc=1.459 N/mm²
Design punching shear resistance vRdc=senh*0.035*k^1.5*fck^0.5
=1.5349 N/mm²

MAIN REINFORCEMENT	**Characteristic strength**	**500 N/mm²**
IN X-DIRECTION:	**Diameter of bars**	**25 mm**
SUMMARY	**Spacing**	**200 mm**
	Total number of bars	**16**
	Total area required	**7740 mm²**
	Total area provided	**7854 mm²**

MAIN REINFORCEMENT	**Characteristic strength**	**500 N/mm²**
IN Y-DIRECTION:	**Diameter of bars**	**25 mm**
SUMMARY	**Spacing**	**200 mm**
	Total number of bars	**16**
	Total area required	**7740 mm²**
	Total area provided	**7854 mm²**
DISTRIBUTION REINFORCEMENT	**Characteristic strength**	**500 N/mm²**
SUMMARY	**Diameter of bars**	**25 mm**
IN X-DIRECTION:		
In top:	**Number of bars**	**20**
	Spacing of bars	**190 mm**
	Area required	**2580 mm²/m**
	Area provided	**2583.5 mm²/m**
In bottom:	**Number of bars**	**4**
	Spacing of bars	**160 mm**
IN Y-DIRECTION:		
In top:	**Number of bars**	**20**
	Spacing of bars	**190 mm**
	Area required	**2580 mm²/m**
	Area provided	**2583.5 mm²/m**
In bottom:	**Number of bars**	**4**
	Spacing of bars	**160 mm**
SIDE BARS SUMMARY	**Characteristic strength**	**500 N/mm²**
	Diameter of bars	**12 mm**
	Total number of bars	**12**
	Spacing of bars	**250 mm**
QUANTITIES	**Total concrete volume**	**24.968 m³**
	Total area of formwork	**26.213 m²**

Location: Ex3 - Small pilecap with high-grade concrete

Bottom layer of main steel is assumed to run in X-direction.

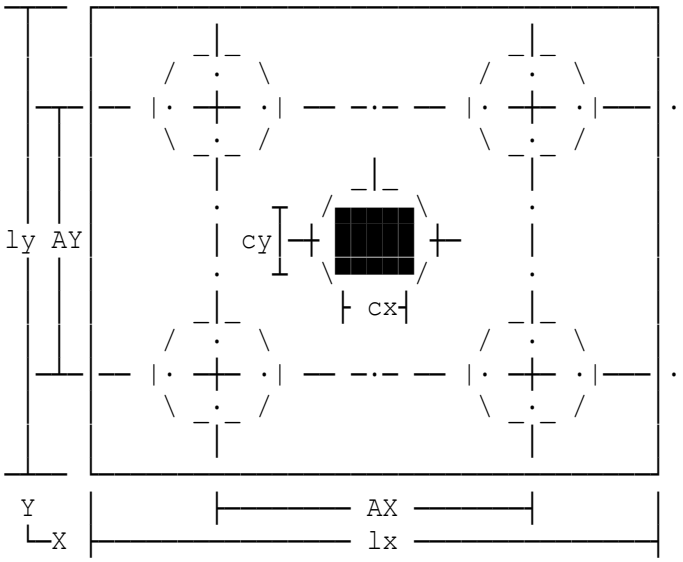

Pilecap for five piles

Designed by truss-analogy to EC2 Part 1-1.

Pilecap assumed square (i.e. lx=ly) with main reinforcement arranged in bands parallel to the principal axes and symmetrical about pile centres.

Ultimate load & moment values to be used.

Total design load on column	N=7000 kN
Column dimension cx	cx=350 mm
Column dimension cy	cy=350 mm
Nominal pile diameter	PileD=250 mm
Min spacing of pile centres	spc=500 mm
Partial safety factor for steel	gams=1.15
Partial safety factor for conc.	gamc=1.5
Spc.of pile ctrs in X-direction	AX=710 mm
Overhang: pile face to cap edge	olap=150 mm
Length of pilecap	lx=1260 mm
Spc.of pile ctrs in Y-direction	AY=710 mm
Breadth of pilecap	ly=1260 mm
Char yield strength of reinft.	fyk=500 N/mm²
Cover to underside of main bars	Cover=150 mm
Side and top cover to main bars	Scvr=75 mm
Chosen depth of pilecap	h=1600 mm

Design of main steel in X-direction

Main steel diameter	diaX=25 mm
Main steel spacing	SpcX=175 mm

Design of main steel in Y-direction

Main steel diameter	diaY=20 mm
Main steel spacing	SpcY=105 mm

Distribution steel

Distribution steel diameter LSize=32 mm
Spacing of bars LSpac=265 mm

Check shear resistance in X-direction

Shear force due to ultimate load VEd=N/2.5=2800 kN
Shear resistance VRdc=beta'*CRdc*ks*vRdc*bw*d/1000
=2641.9 kN
Modified shear resistance VRdc=VRdm=2884.7 kN

SHEAR SUMMARY	**Shear force**	**2800 kN**
	Shear resistance	**2884.7 kN**

Hence section is satisfactory, no shear reinforcement is required.

Check shear resistance in Y-direction

Shear force due to ultimate load VEd=N/2.5=2800 kN
Shear resistance VRdc=beta'*CRdc*ks*vRdc*bw*d/1000
=2584.4 kN
Modified shear resistance VRdc=VRdm=2848.7 kN

SHEAR SUMMARY	**Shear force**	**2800 kN**
	Shear resistance	**2848.7 kN**

Hence section is satisfactory, no shear reinforcement is required.

Check punching shear

Check punching shear at column face:
Eccentricity factor β beta=1
Shear stress at column perimeter vEd=beta*VEd*1000/(uo*d)=2.8269 N/mm²
Maximum punching shear resistance vRdmax=0.5*v*fcd=8 N/mm²
Shear stress at column perimeter is within the maximum punching shear resistance, hence satisfactory.

MAIN REINFORCEMENT	**Characteristic strength**	**500 N/mm²**
IN X-DIRECTION:	**Diameter of bars**	**25 mm**
SUMMARY	**Spacing**	**175 mm**
	Total number of bars	**8**
	Total area required	**3814.9 mm²**
	Total area provided	**3927 mm²**
MAIN REINFORCEMENT	**Characteristic strength**	**500 N/mm²**
IN Y-DIRECTION:	**Diameter of bars**	**20 mm**
SUMMARY	**Spacing**	**105 mm**
	Total number of bars	**12**
	Total area required	**3748.2 mm²**
	Total area provided	**3769.9 mm²**
DISTRIBUTION REINFORCEMENT	**Characteristic strength**	**500 N/mm²**
SUMMARY	**Diameter of bars**	**32 mm**

IN X-DIRECTION:

In top:	**Number of bars**	**5**
	Spacing of bars	**265 mm**
	Area required	**3027.7 mm²/m**
	Area provided	**3034.9 mm²/m**
In bottom:	**No distribution bars required**	
IN Y-DIRECTION:		
In top:	**Number of bars**	**5**
	Spacing of bars	**265 mm**
	Area required	**3027.7 mm²/m**
	Area provided	**3034.9 mm²/m**
In bottom:	**No distribution bars required**	
SIDE BARS SUMMARY	**Characteristic strength**	**500 N/mm²**
	Diameter of bars	**12 mm**
	Total number of bars	**12**
	Spacing of bars	**250 mm**
QUANTITIES	**Total concrete volume**	**2.5402 m³**
	Total area of formwork	**8.064 m²**

Location: Ex1 - Typical pilecap

Design to BS8110(1997) with partial safety factor for steel gammaS=1.15

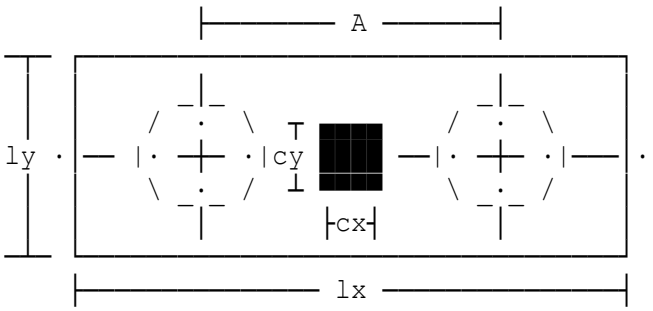

Pilecap for two piles

Designed by Bending Theory.

Calculations are in accordance with BS8110.

For bond calculations, any high-yield bars are assumed Type 2 deformed.

Total ultimate load on column	N=2800 kN
Column dimension cx	cx=500 mm
Column dimension cy	cy=500 mm
Nominal pile diameter	PileD=450 mm
Spacing of pile centres	A=1350 mm
Overhang: pile face to cap edge	olap=150 mm
Length of pilecap	lx=2100 mm
Width of pilecap	ly=750 mm
Concrete grade	fcu=35 N/mm²
Steel strength	fy=500 N/mm²
Cover to underside of main bars	Cover=150 mm
Side and top cover to main bars	SCover=75 mm
Chosen depth of pilecap	h=1020 mm

Design of main reinforcement

Main steel diameter	dia=16 mm
Main steel spacing	Space=65 mm

Distribution steel

Diameter of bar	LSize=12 mm
Spacing of bars	LSpac=85 mm

MAIN REINFORCEMENT SUMMARY	**Characteristic strength**	**500 N/mm²**
	Diameter of bars	**16 mm**
	Number of bars	**9**
	Spacing	**65 mm**
	Area required	**1694.7 mm²**
	Area provided	**1809.6 mm²**
	Volume of steel	**4565.5 cm³**
	Weight of steel	**35.839 kg**
DISTRIBUTION REINFORCEMENT SUMMARY	**Characteristic strength**	**500 N/mm²**
	Diameter of bars	**12 mm**
	Number of bars	**23**
	Spacing of bars	**85 mm**
	Area required	**1326 mm²**
	Area provided	**1330.6 mm²**
	Volume of steel	**8443.6 cm³**
	Weight of steel	**66.282 kg**

TOP BARS SUMMARY	**Characteristic strength**	**500 N/mm²**
	Diameter of bars	**12 mm**
	Number of bars	**8**
	Spacing of bars	**85 mm**
	Volume of steel	**1764.3 cm³**
	Weight of steel	**13.85 kg**
SIDE BARS SUMMARY	**Characteristic strength**	**500 N/mm²**
	Diameter of bars	**12 mm**
	Number of bars/side	**4**
	Spacing of bars	**250 mm**
	Volume of steel	**1764.3 cm³**
	Weight of steel	**13.85 kg**
QUANTITIES	**Total volume of concrete needed**	**1.6065 m³**
	Total area of formwork	**5.814 m²**
	Total volume of steel	**16538 cm³**
	Total weight of steel	**129.82 kg**
	Approx. self-weight of pilecap	**53.978 kN**
	Approx. total load on each pile	**1427 kN**

Location: Ex2 - Heavily-loaded column

Design to BS8110(1997) with partial safety factor for steel gammaS=1.15

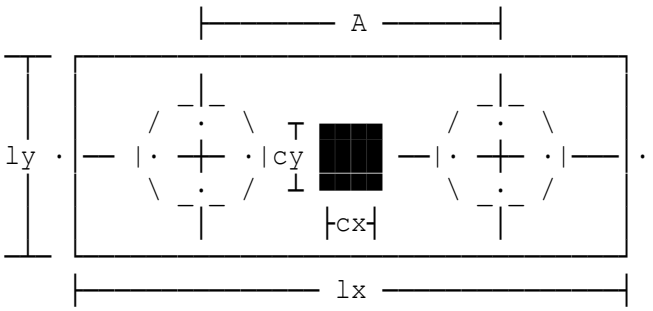

Pilecap for two piles

Designed by Bending Theory.

Calculations are in accordance with BS8110.

For bond calculations, any high-yield bars are assumed Type 2 deformed.

Total ultimate load on column	N=10000 kN
Column dimension cx	cx=500 mm
Column dimension cy	cy=500 mm
Nominal pile diameter	PileD=500 mm
Spacing of pile centres	A=1500 mm
Overhang: pile face to cap edge	olap=300 mm
Length of pilecap	lx=2600 mm
Width of pilecap	ly=1100 mm
Concrete grade	fcu=35 N/mm²
Steel strength	fy=500 N/mm²
Cover to underside of main bars	Cover=150 mm
Side and top cover to main bars	SCover=75 mm
Chosen depth of pilecap	h=1830 mm

Design of main reinforcement

Main steel diameter	dia=20 mm
Main steel spacing	Space=80 mm

Distribution steel

Diameter of bar	LSize=25 mm
Spacing of bars	LSpac=205 mm

MAIN REINFORCEMENT SUMMARY	**Characteristic strength**	**500 N/mm²**
	Diameter of bars	**20 mm**
	Number of bars	**12**
	Spacing	**80 mm**
	Area required	**3646.2 mm²**
	Area provided	**3769.9 mm²**
	Volume of steel	**15871 cm³**
	Weight of steel	**124.59 kg**
DISTRIBUTION REINFORCEMENT SUMMARY	**Characteristic strength**	**500 N/mm²**
	Diameter of bars	**25 mm**
	Number of bars	**12**
	Spacing of bars	**205 mm**
	Area required	**2379 mm²**
	Area provided	**2394.5 mm²**
	Volume of steel	**35696 cm³**
	Weight of steel	**280.22 kg**

TOP BARS SUMMARY	**Characteristic strength**	**500 N/mm²**
	Diameter of bars	**25 mm**
	Number of bars	**5**
	Spacing of bars	**205 mm**
	Volume of steel	**6013.2 cm³**
	Weight of steel	**47.204 kg**
SIDE BARS SUMMARY	**Characteristic strength**	**500 N/mm²**
	Diameter of bars	**12 mm**
	Number of bars/side	**7**
	Spacing of bars	**250 mm**
	Volume of steel	**3879.2 cm³**
	Weight of steel	**30.452 kg**
QUANTITIES	**Total volume of concrete needed**	**5.2338 m³**
	Total area of formwork	**13.542 m²**
	Total volume of steel	**61460 cm³**
	Total weight of steel	**482.46 kg**
	Approx. self-weight of pilecap	**175.86 kN**
	Approx. total load on each pile	**5088 kN**

Location: Ex3 - Lightly-loaded column

Design to BS8110(1997) with partial safety factor for steel gammaS=1.15

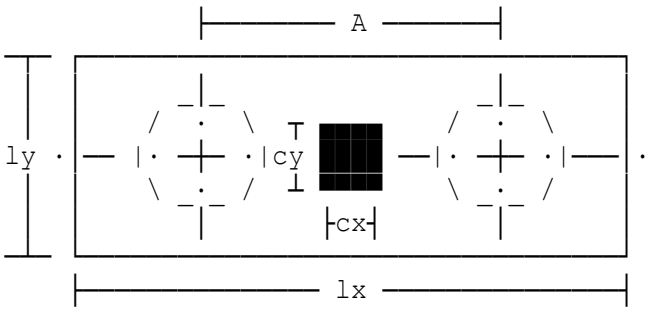

Pilecap for two piles

Designed by Bending Theory.

Calculations are in accordance with BS8110.

For bond calculations, any high-yield bars are assumed Type 2 deformed.

Total ultimate load on column	N=100 kN
Column dimension cx	cx=500 mm
Column dimension cy	cy=500 mm
Nominal pile diameter	PileD=450 mm
Spacing of pile centres	A=1350 mm
Overhang: pile face to cap edge	olap=600 mm
Length of pilecap	lx=3000 mm
Width of pilecap	ly=1650 mm
Concrete grade	fcu=35 N/mm²
Steel strength	fy=500 N/mm²
Cover to underside of main bars	Cover=150 mm
Side and top cover to main bars	SCover=75 mm
Chosen depth of pilecap	h=300 mm

Design of main reinforcement

Main steel diameter	dia=12 mm
Main steel spacing	Space=275 mm

Distribution steel

Diameter of bar	LSize=12 mm
Spacing of bars	LSpac=285 mm

MAIN REINFORCEMENT SUMMARY	**Characteristic strength**	**500 N/mm²**
	Diameter of bars	**12 mm**
	Number of bars	**6**
	Spacing	**275 mm**
	Area required	**643.5 mm²**
	Area provided	**678.58 mm²**
	Volume of steel	**1302.9 cm³**
	Weight of steel	**10.228 kg**
DISTRIBUTION REINFORCEMENT SUMMARY	**Characteristic strength**	**500 N/mm²**
	Diameter of bars	**12 mm**
	Number of bars	**11**
	Spacing of bars	**285 mm**
	Area required	**390 mm²**
	Area provided	**396.83 mm²**
	Volume of steel	**4486.1 cm³**
	Weight of steel	**35.216 kg**

TOP BARS SUMMARY	**Characteristic strength**	**500 N/mm²**
	Diameter of bars	**12 mm**
	Number of bars	**6**
	Spacing of bars	**285 mm**
	Volume of steel	**1934 cm³**
	Weight of steel	**15.182 kg**
SIDE BARS SUMMARY	**Characteristic strength**	**500 N/mm²**
	Diameter of bars	**12 mm**
	Number of bars/side	**1**
	Spacing of bars	**250 mm**
	Volume of steel	**644.65 cm³**
	Weight of steel	**5.0605 kg**
QUANTITIES	**Total volume of concrete needed**	**1.485 m³**
	Total area of formwork	**2.79 m²**
	Total volume of steel	**8367.6 cm³**
	Total weight of steel	**65.686 kg**
	Approx. self-weight of pilecap	**49.896 kN**
	Approx. total load on each pile	**75 kN**

Location: Ex1 - Typical pilecap

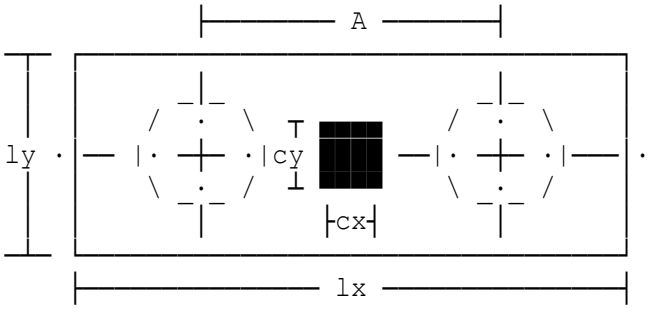

Pilecap for two piles

Designed using bending theory to EC2 Part 1-1.

Use ultimate values for load and moment.

Total design load on column	N=1500 kN
Column dimension cx	cx=500 mm
Column dimension cy	cy=500 mm
Nominal pile diameter	PileD=450 mm
Partial safety factor for steel	gams=1.15
Partial safety factor for conc.	gamc=1.5
Spacing of pile centres	A=1350 mm
Overhang: pile face to cap edge	olap=150 mm
Length of pilecap	lx=2100 mm
Width of pilecap	ly=750 mm
Char yield strength of reinft.	fyk=500 N/mm²
Cover to underside of main bars	Cover=150 mm
Side and top cover to main bars	SCover=75 mm
Chosen depth of pilecap	h=1000 mm

Design of main reinforcement

Main steel diameter	dia=12 mm
Main steel spacing	Space=60 mm

Distribution steel

Distribution steel diameter	LSize=12 mm
Spacing of bars	LSpac=75 mm
Area of dist.steel provided	A2=PI*LSize^2*250/LSpac=1508 mm²/m

Check shear resistance

Shear force due to ultimate load	VEd=N/2+Mx'*1000/A=750 kN
Shear resistance	VRdc=beta'*CRdc*ks*vRdc*bw*d/1000 =772.6 kN
Modified shear resistance	VRdc=VRdm=850.1 kN

SHEAR SUMMARY	**Shear force**	**750 kN**
	Shear resistance	**850.1 kN**

Hence section is satisfactory, no shear reinforcement is required.

Check punching shear at column face

Check punching shear at column face:
Eccentricity factor β beta=1
Shear stress at column perimeter vEd=beta*VEd*1000/(uo*d)=0.8886 N/mm²
Maximum punching shear resistance vRdmax=0.5*v*fcd=4.973 N/mm²
Shear stress at column perimeter is within the maximum punching shear resistance, hence satisfactory.

MAIN REINFORCEMENT SUMMARY	**Characteristic strength**	**500 N/mm²**
	Diameter of bars	**12 mm**
	Number of bars	**10**
	Spacing	**60 mm**
	Area required	**1125 mm²**
	Area provided	**1131 mm²**
DISTRIBUTION REINFORCEMENT SUMMARY	**Characteristic strength**	**500 N/mm²**
	Diameter of bars	**12 mm**
	Number of bars	**27**
	Spacing of bars	**75 mm**
	Area required	**1500 mm²**
	Area provided	**1508 mm²**
TOP BARS SUMMARY	**Characteristic strength**	**500 N/mm²**
	Diameter of bars	**12 mm**
	Number of bars	**9**
	Spacing of bars	**75 mm**
SIDE BARS SUMMARY	**Characteristic strength**	**500 N/mm²**
	Diameter of bars	**12 mm**
	Number of bars/side	**4**
	Spacing of bars	**250 mm**
QUANTITIES	**Total concrete volume**	**1.575 m³**
	Total area of formwork	**5.7 m²**

Location: Ex2 - Heavily-loaded column

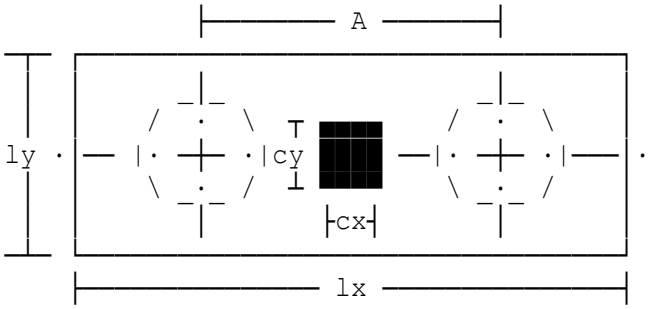

Pilecap for two piles

Designed using bending theory to EC2 Part 1-1.

Use ultimate values for load and moment.

Total design load on column	N=5000 kN
Column dimension cx	cx=500 mm
Column dimension cy	cy=500 mm
Nominal pile diameter	PileD=500 mm
Partial safety factor for steel	gams=1.15
Partial safety factor for conc.	gamc=1.5
Spacing of pile centres	A=1500 mm
Overhang: pile face to cap edge	olap=300 mm
Length of pilecap	lx=2600 mm
Width of pilecap	ly=1100 mm
Char yield strength of reinft.	fyk=500 N/mm²
Cover to underside of main bars	Cover=150 mm
Side and top cover to main bars	SCover=75 mm
Chosen depth of pilecap	h=2200 mm

Design of main reinforcement

Main steel diameter	dia=20 mm
Main steel spacing	Space=80 mm

Distribution steel

Distribution steel diameter	LSize=20 mm
Spacing of bars	LSpac=95 mm
Area of dist.steel provided	A2=PI*LSize^2*250/LSpac=3307 mm²/m

Check shear resistance

Shear force due to ultimate load	VEd=N/2+Mx'*1000/A=2500 kN
Shear resistance	VRdc=beta'*CRdc*ks*vRdc*bw*d/1000 =2370 kN
Modified shear resistance	VRdc=VRdm=2501 kN

SHEAR SUMMARY	**Shear force**	**2500 kN**
	Shear resistance	**2501 kN**

Hence section is satisfactory, no shear reinforcement is required.

Check punching shear at column face

Check punching shear at column face:
Eccentricity factor β beta=1
Shear stress at column perimeter vEd=beta*VEd*1000/(uo*d)=1.225 N/mm²
Maximum punching shear resistance vRdmax=0.5*v*fcd=4.973 N/mm²
Shear stress at column perimeter is within the maximum punching shear resistance, hence satisfactory.

MAIN REINFORCEMENT SUMMARY	**Characteristic strength**	**500 N/mm²**
	Diameter of bars	**20 mm**
	Number of bars	**12**
	Spacing	**80 mm**
	Area required	**3630 mm²**
	Area provided	**3770 mm²**
DISTRIBUTION REINFORCEMENT SUMMARY	**Characteristic strength**	**500 N/mm²**
	Diameter of bars	**20 mm**
	Number of bars	**26**
	Spacing of bars	**95 mm**
	Area required	**3300 mm²**
	Area provided	**3307 mm²**
TOP BARS SUMMARY	**Characteristic strength**	**500 N/mm²**
	Diameter of bars	**20 mm**
	Number of bars	**11**
	Spacing of bars	**95 mm**
SIDE BARS SUMMARY	**Characteristic strength**	**500 N/mm²**
	Diameter of bars	**12 mm**
	Number of bars/side	**8**
	Spacing of bars	**250 mm**
QUANTITIES	**Total concrete volume**	**6.292 m³**
	Total area of formwork	**16.28 m²**

Location: Ex3 - Lightly-loaded column

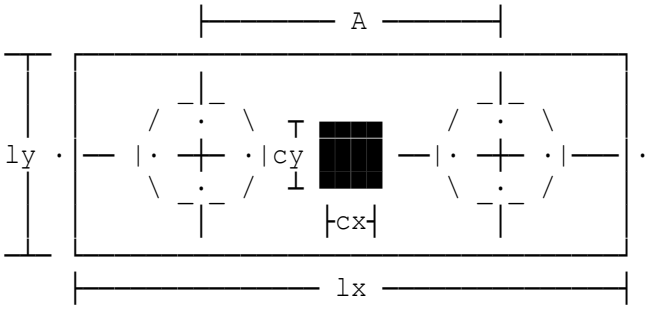

Pilecap for two piles

Designed using bending theory to EC2 Part 1-1.

Use ultimate values for load and moment.

Total design load on column	N=100 kN
Column dimension cx	cx=500 mm
Column dimension cy	cy=500 mm
Nominal pile diameter	PileD=450 mm
Partial safety factor for steel	gams=1.15
Partial safety factor for conc.	gamc=1.5
Spacing of pile centres	A=1350 mm
Overhang: pile face to cap edge	olap=600 mm
Length of pilecap	lx=3000 mm
Width of pilecap	ly=1650 mm
Char yield strength of reinft.	fyk=500 N/mm²
Cover to underside of main bars	Cover=150 mm
Side and top cover to main bars	SCover=75 mm
Chosen depth of pilecap	h=300 mm

Design of main reinforcement

Main steel diameter	dia=12 mm
Main steel spacing	Space=225 mm

Distribution steel

Distribution steel diameter	LSize=12 mm
Spacing of bars	LSpac=250 mm
Area of dist.steel provided	A2=PI*LSize^2*250/LSpac=452.4 mm²/m

Check shear resistance

Shear force due to ultimate load	VEd=N/2+Mx'*1000/A=50 kN
Shear resistance	VRdc=beta'*CRdc*ks*vRdc*bw*d/1000 =120 kN
Modified shear resistance	VRdc=VRdm=124.5 kN

SHEAR SUMMARY	**Shear force**	**50 kN**
	Shear resistance	**124.5 kN**

Hence section is satisfactory, no shear reinforcement is required.

Check punching shear at column face

Check punching shear at column face:
Eccentricity factor β beta=1
Shear stress at column perimeter vEd=beta*VEd*1000/(uo*d)=0.3472 N/mm²
Maximum punching shear resistance vRdmax=0.5*v*fcd=4.973 N/mm²
Shear stress at column perimeter is within the maximum punching shear resistance, hence satisfactory.

MAIN REINFORCEMENT SUMMARY	**Characteristic strength**	**500 N/mm²**
	Diameter of bars	**12 mm**
	Number of bars	**7**
	Spacing	**225 mm**
	Area required	**742.5 mm²**
	Area provided	**791.7 mm²**
DISTRIBUTION REINFORCEMENT SUMMARY	**Characteristic strength**	**500 N/mm²**
	Diameter of bars	**12 mm**
	Number of bars	**12**
	Spacing of bars	**250 mm**
	Area required	**450 mm²**
	Area provided	**452.4 mm²**
TOP BARS SUMMARY	**Characteristic strength**	**500 N/mm²**
	Diameter of bars	**12 mm**
	Number of bars	**7**
	Spacing of bars	**250 mm**
SIDE BARS SUMMARY	**Characteristic strength**	**500 N/mm²**
	Diameter of bars	**12 mm**
	Number of bars/side	**1**
	Spacing of bars	**250 mm**
QUANTITIES	**Total concrete volume**	**1.485 m³**
	Total area of formwork	**2.79 m²**

Location: Pilecap at G2

Design to BS8110(1997) with partial safety factor for steel gammaS=1.15

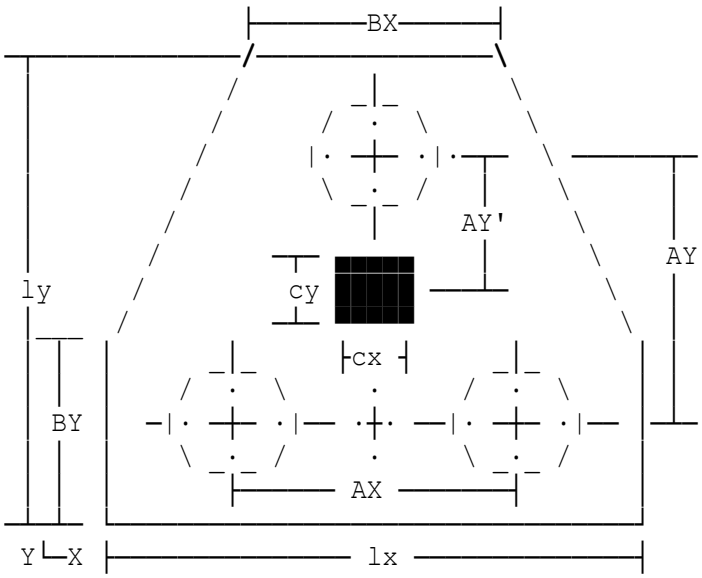

Pilecap for 3 piles

Calculations are in accordance with BS8110: 1985 (amended 1989). Pilecap shaped as shown with main reinforcement parallel to principal axes (alternative system with reinforcing bars running between heads of piles will be subject of a future proforma). For bond calculations any high-yield bars assumed to be Type 2:deformed.

Total ultimate load on column	N=4200 kN
Column dimension cx	cx=500 mm
Column dimension cy	cy=500 mm
Nominal pile diameter	PileD=450 mm
Spac.of pile ctrs in X-direction	AX=1350 mm
Overlap from pile face to cap edge	olap=150 mm
Spc.of pile ctrs in Y-direction	AY=1169 mm
Distance AY' to centre of column	AY'=779 mm
Maximum cap length in X-direction	lx=2100 mm
Min.cap dimension in X-direction	BX=750 mm
Max.cap breadth in Y-direction	ly=1919 mm
Min.cap dimension in Y-direction	BY=700 mm
Concrete grade	fcu=35 N/mm²
Steel strength	fy=500 N/mm²
Cover to underside of main bars	Cover=150 mm
Side and top cover to main bars	Scvr=75 mm
Chosen depth of pilecap	h=1020 mm

Design of main steel in X-direction

Main steel diameter	diaX=16 mm
Main steel spacing	SpcX=145 mm

Design of main steel in Y-direction

Main steel diameter	diaY=16 mm
Main steel spacing	SpcY=145 mm

Distribution steel

Diameter of bar	LSize=12 mm
Spacing of bars	LSpac=85 mm

MAIN REINFORCEMENT IN X-DIRECTION: SUMMARY	**Characteristic strength**	**500 N/mm²**
	Diameter of bars	**16 mm**
	Spacing	**145 mm**
	Total number of bars	**13**
	Total area required	**2544.6 mm²**
	Total area provided	**2613.8 mm²**
	Volume of steel	**5483.8 cm³**
	Weight of steel	**43.048 kg**
MAIN REINFORCEMENT IN Y-DIRECTION: SUMMARY	**Characteristic strength**	**500 N/mm²**
	Diameter of bars	**16 mm**
	Spacing	**145 mm**
	Total number of bars	**14**
	Area reqd.@ critical section	**2784.6 mm²**
	Area prov.@ critical section	**2814.9 mm²**
	Volume of steel	**5636.2 cm³**
	Weight of steel	**44.244 kg**
DISTRIBUTION REINFORCEMENT SUMMARY	**Characteristic strength**	**500 N/mm²**
	Diameter of bars	**12 mm**
IN X-DIRECTION:		
In top:	**Number of bars**	**21**
	Spacing of bars	**85 mm**
	Area required	**1326 mm²/m**
	Area provided	**1330.6 mm²/m**
	Volume of steel	**3651.9 cm³**
	Weight of steel	**28.668 kg**
IN Y-DIRECTION:		
In top:	**Number of bars**	**24**
	Spacing of bars	**85 mm**
	Area required	**1326 mm²/m**
	Area provided	**1330.6 mm²/m**
	Volume of steel	**3796.7 cm³**
	Weight of steel	**29.804 kg**
SIDE BARS SUMMARY	**Characteristic strength**	**500 N/mm²**
	Diameter of bars	**12 mm**
	Total number of bars	**12**
	Spacing of bars	**250 mm**
QUANTITIES	**Total volume of concrete needed**	**3.2712 m³**
	Total area of formwork	**7.1776 m²**
	Total volume of steel	**22160 cm³**
	Total weight of steel	**173.96 kg**
	Approx.self-weight of pilecap	**109.91 kN**
	Approx.total load on single pile	**1437 kN**
	Approx.total load on twin pile	**1437 kN**

Location: Cap for heavily-loaded column using mild steel reinf.

Design to BS8110(1997) with partial safety factor for steel gammaS=1.15

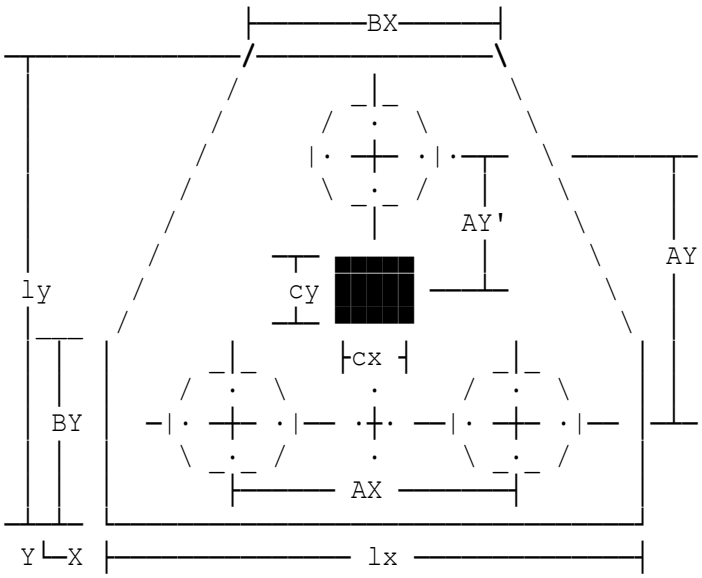

Pilecap for 3 piles

Calculations are in accordance with BS8110: 1985 (amended 1989). Pilecap shaped as shown with main reinforcement parallel to principal axes (alternative system with reinforcing bars running between heads of piles will be subject of a future proforma). For bond calculations any high-yield bars assumed to be Type 2:deformed.

Total ultimate load on column	N=8000 kN
Column dimension cx	cx=500 mm
Column dimension cy	cy=500 mm
Nominal pile diameter	PileD=500 mm
Spac.of pile ctrs in X-direction	AX=1500 mm
Overlap from pile face to cap edge	olap=300 mm
Spc.of pile ctrs in Y-direction	AY=1299 mm
Distance AY' to centre of column	AY'=866 mm
Maximum cap length in X-direction	lx=2600 mm
Min.cap dimension in X-direction	BX=1100 mm
Max.cap breadth in Y-direction	ly=2400 mm
Min.cap dimension in Y-direction	BY=1050 mm
Concrete grade	fcu=35 N/mm²
Steel strength	fy=250 N/mm²
Cover to underside of main bars	Cover=150 mm
Side and top cover to main bars	Scvr=75 mm
Chosen depth of pilecap	h=1080 mm

Design of main steel in X-direction

Main steel diameter	diaX=20 mm
Main steel spacing	SpcX=100 mm

Design of main steel in Y-direction

Main steel diameter	diaY=20 mm
Main steel spacing	SpcY=75 mm

Distribution steel

Diameter of bar	LSize=20 mm
Spacing of bars	LSpac=120 mm

MAIN REINFORCEMENT IN X-DIRECTION: SUMMARY	**Characteristic strength**	**250 N/mm²**
	Diameter of bars	**20 mm**
	Spacing	**100 mm**
	Total number of bars	**23**
	Total area required	**7094.7 mm²**
	Total area provided	**7225.7 mm²**
	Volume of steel	**17128 cm³**
	Weight of steel	**134.45 kg**
MAIN REINFORCEMENT IN Y-DIRECTION: SUMMARY	**Characteristic strength**	**250 N/mm²**
	Diameter of bars	**20 mm**
	Spacing	**75 mm**
	Total number of bars	**32**
	Area reqd.@ critical section	**8937 mm²**
	Area prov.@ critical section	**9424.8 mm²**
	Volume of steel	**23144 cm³**
	Weight of steel	**181.68 kg**
DISTRIBUTION REINFORCEMENT SUMMARY	**Characteristic strength**	**250 N/mm²**
	Diameter of bars	**20 mm**
IN X-DIRECTION:		
In top:	**Number of bars**	**19**
	Spacing of bars	**120 mm**
	Area required	**2592 mm²/m**
	Area provided	**2618 mm²/m**
	Volume of steel	**12199 cm³**
	Weight of steel	**95.761 kg**
IN Y-DIRECTION:		
In top:	**Number of bars**	**22**
	Spacing of bars	**120 mm**
	Area required	**2592 mm²/m**
	Area provided	**2618 mm²/m**
	Volume of steel	**12761 cm³**
	Weight of steel	**100.18 kg**
SIDE BARS SUMMARY	**Characteristic strength**	**250 N/mm²**
	Diameter of bars	**12 mm**
	Total number of bars	**12**
	Spacing of bars	**250 mm**
QUANTITIES	**Total volume of concrete needed**	**5.6457 m³**
	Total area of formwork	**9.5998 m²**
	Total volume of steel	**69561 cm³**
	Total weight of steel	**546.06 kg**
	Approx.self-weight of pilecap	**189.7 kN**
	Approx.total load on single pile	**2730 kN**
	Approx.total load on twin pile	**2730 kN**

Location: Cap for lightly-loaded column

Design to BS8110(1997) with partial safety factor for steel gammaS=1.15

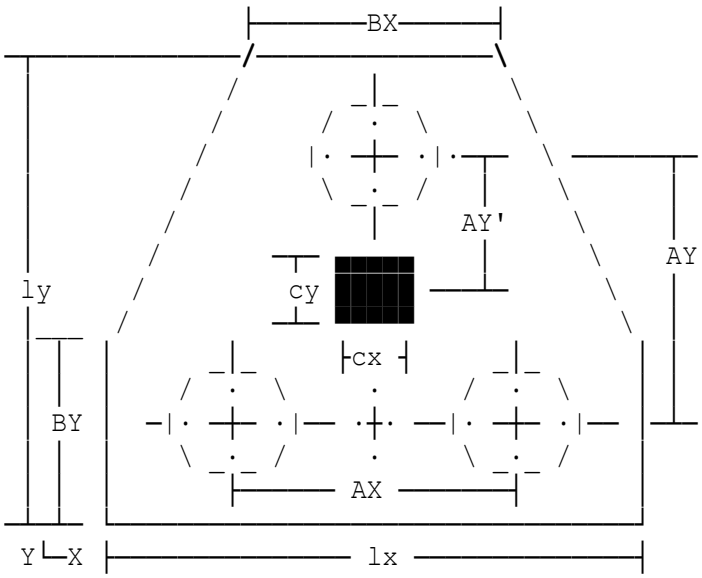

Pilecap for 3 piles

Calculations are in accordance with BS8110: 1985 (amended 1989). Pilecap shaped as shown with main reinforcement parallel to principal axes (alternative system with reinforcing bars running between heads of piles will be subject of a future proforma). For bond calculations any high-yield bars assumed to be Type 2:deformed.

Total ultimate load on column	N=150 kN
Column dimension cx	cx=400 mm
Column dimension cy	cy=400 mm
Nominal pile diameter	PileD=250 mm
Spac.of pile ctrs in X-direction	AX=750 mm
Overlap from pile face to cap edge	olap=150 mm
Spc.of pile ctrs in Y-direction	AY=650 mm
Distance AY' to centre of column	AY'=433 mm
Maximum cap length in X-direction	lx=1300 mm
Min.cap dimension in X-direction	BX=550 mm
Max.cap breadth in Y-direction	ly=1200 mm
Min.cap dimension in Y-direction	BY=500 mm
Concrete grade	fcu=35 N/mm²
Steel strength	fy=500 N/mm²
Cover to underside of main bars	Cover=150 mm
Side and top cover to main bars	Scvr=75 mm
Chosen depth of pilecap	h=300 mm

Design of main steel in X-direction

Main steel diameter	diaX=12 mm
Main steel spacing	SpcX=250 mm

Design of main steel in Y-direction

Main steel diameter	diaY=16 mm
Main steel spacing	SpcY=300 mm

Distribution steel

Diameter of bar	LSize=12 mm
Spacing of bars	LSpac=285 mm

MAIN REINFORCEMENT IN X-DIRECTION: SUMMARY	**Characteristic strength**	**500 N/mm²**
	Diameter of bars	**12 mm**
	Spacing	**250 mm**
	Total number of bars	**5**
	Total area required	**468 mm²**
	Total area provided	**565.49 mm²**
	Volume of steel	**582.45 cm³**
	Weight of steel	**4.5722 kg**
MAIN REINFORCEMENT IN Y-DIRECTION: SUMMARY	**Characteristic strength**	**500 N/mm²**
	Diameter of bars	**16 mm**
	Spacing	**300 mm**
	Total number of bars	**4**
	Area reqd.@ critical section	**426.77 mm²**
	Area prov.@ critical section	**804.25 mm²**
	Volume of steel	**780.12 cm³**
	Weight of steel	**6.1239 kg**
DISTRIBUTION REINFORCEMENT SUMMARY	**Characteristic strength**	**500 N/mm²**
	Diameter of bars	**12 mm**
IN X-DIRECTION:		
In top:	**Number of bars**	**4**
	Spacing of bars	**285 mm**
	Area required	**390 mm²/m**
	Area provided	**396.83 mm²/m**
	Volume of steel	**426.94 cm³**
	Weight of steel	**3.3515 kg**
IN Y-DIRECTION:		
In top:	**Number of bars**	**4**
	Spacing of bars	**285 mm**
	Area required	**390 mm²/m**
	Area provided	**396.83 mm²/m**
	Volume of steel	**410.54 cm³**
	Weight of steel	**3.2228 kg**
SIDE BARS SUMMARY	**Characteristic strength**	**500 N/mm²**
	Diameter of bars	**12 mm**
	Total number of bars	**3**
	Spacing of bars	**250 mm**
QUANTITIES	**Total volume of concrete needed**	**0.38925 m³**
	Total area of formwork	**1.3315 m²**
	Total volume of steel	**2813 cm³**
	Total weight of steel	**22.082 kg**
	Approx.self-weight of pilecap	**13.079 kN**
	Approx.total load on single pile	**55 kN**
	Approx.total load on twin pile	**55 kN**

Location: Pilecap at G2

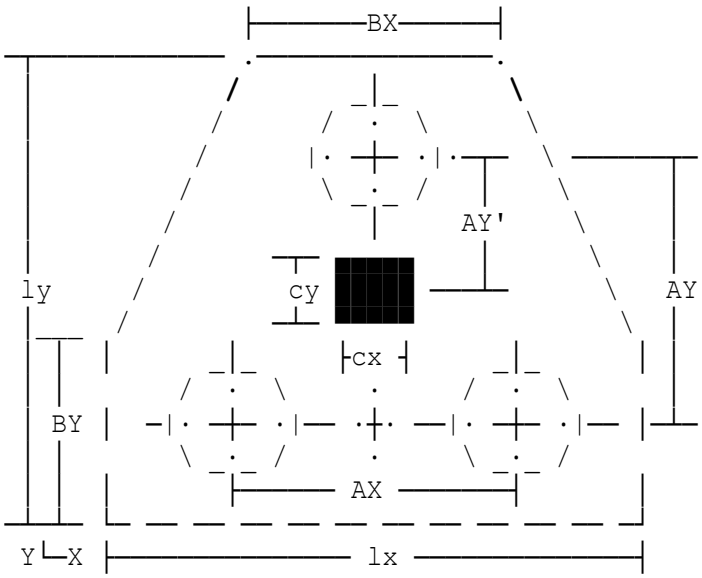

Pilecap for 3 piles

Design to EC2 Part 1-1.

Pilecap shaped as shown with main reinforcement parallel to principal axes.

Use ultimate values for load and moment.

Applied moment in the Y-direction only.

Total design load on column	N=3000 kN
Column dimension cx	cx=500 mm
Column dimension cy	cy=500 mm
Design BM at bottom of column	My'=0 kNm
Partial safety factor for steel	gams=1.15
Partial safety factor for conc.	gamc=1.5
Nominal pile diameter	PileD=450 mm
Spacing of pile ctrs in X-dir.	AX=1350 mm
Dist. from pile face to cap edge	olap=150 mm
Spacing of pile ctrs in Y-dir.	AY=1169 mm
Distance AY' to centre of column	AY'=779 mm
Max cap length in X-direction	lx=2100 mm
Min cap dimension in X-direction	BX=750 mm
Max cap breadth in Y-direction	ly=1919 mm
Min cap dimension in Y-direction	BY=700 mm
Char yield strength of reinft.	fyk=500 N/mm²
Cover to underside of main bars	Cover=150 mm
Side and top cover to main bars	Scvr=75 mm
Chosen depth of pilecap	h=1020 mm

Design of main steel in X-direction

Main steel diameter	diaX=12 mm
Main steel spacing	SpcX=70 mm

Design of main steel in Y-direction

Main steel diameter	diaY=16 mm
Main steel spacing	SpcY=125 mm

Distribution steel

Distribution steel diameter LSize=20 mm
Spacing of bars LSpac=205 mm
Area of dist steel provided A2=PI*LSize^2*250/LSpac=1532 mm²/m

Check shear resistance in X-direction

Shear force due to ultimate load VEd=N2=1000 kN
Shear resistance VRdc=beta'*CRdc*ks*vRdc*bw*d/1000
=1797 kN
Modified shear resistance VRdc=VRdm=1870 kN

SHEAR SUMMARY Shear force 1000 kN
Shear resistance 1870 kN

Hence section is satisfactory, no shear reinforcement is required.

Check shear resistance in Y-direction

Case 1: Check plane passing through single pile on X-X axis
Shear force due to ultimate load VEd=N1+My'*1000/AY=1000 kN
Shear resistance VRdc=beta'*CRdc*ks*vRdc*bw*d/1000
=1597 kN

SHEAR SUMMARY Shear force 1000 kN
Shear resistance 1597 kN

Hence section is satisfactory, no shear reinforcement is required.

Case 2: Check plane passing through twin-piles
Shear force due to ultimate load VEd=2*N2+My'*1000/AY=2000 kN
Shear resistance VRdc=beta'*CRdc*ks*vRdc*bw*d/1000
=2182 kN
Modified shear resistance VRdc=VRdm=2393 kN

SHEAR SUMMARY Shear force 2000 kN
Shear resistance 2393 kN

Hence section is satisfactory, no shear reinforcement is required.

Check punching shear

Check punching shear at column face:
Eccentricity factor β beta=1
Shear stress at column perimeter vEd=beta*VEd*1000/(uo*d)=1.765 N/mm²
Maximum punching shear resistance vRdmax=0.5*v*fcd=4.973 N/mm²
Shear stress at column perimeter is within the maximum punching shear resistance, hence satisfactory.

MAIN REINFORCEMENT	**Characteristic strength**	**500 N/mm²**
IN X-DIRECTION:	**Diameter of bars**	**12 mm**
SUMMARY	**Spacing**	**70 mm**
	Total number of bars	**26**
	Total area required	**2936 mm²**
	Total area provided	**2941 mm²**
MAIN REINFORCEMENT	**Characteristic strength**	**500 N/mm²**
IN Y-DIRECTION:	**Diameter of bars**	**16 mm**
SUMMARY	**Spacing**	**125 mm**
	Total number of bars	**16**
	Area reqd.@ critical section	**3213 mm²**
	Area prov.@ critical section	**3217 mm²**
DISTRIBUTION	**Characteristic strength**	**500 N/mm²**
REINFORCEMENT	**Diameter of bars**	**20 mm**
SUMMARY		
IN X-DIRECTION:		
In top:	**Number of bars**	**9**
	Spacing of bars	**205 mm**
	Area required	**1530 mm²/m**
	Area provided	**1532 mm²/m**
IN Y-DIRECTION:		
In top:	**Number of bars**	**10**
	Spacing of bars	**205 mm**
	Area required	**1530 mm²/m**
	Area provided	**1532 mm²/m**
SIDE BARS SUMMARY	**Characteristic strength**	**500 N/mm²**
	Diameter of bars	**12 mm**
	Total number of bars	**12**
	Spacing of bars	**250 mm**
QUANTITIES	**Total volume of concrete**	**3.271 m³**
	Total area of formwork	**7.178 m²**

Location: Cap for heavily-loaded column

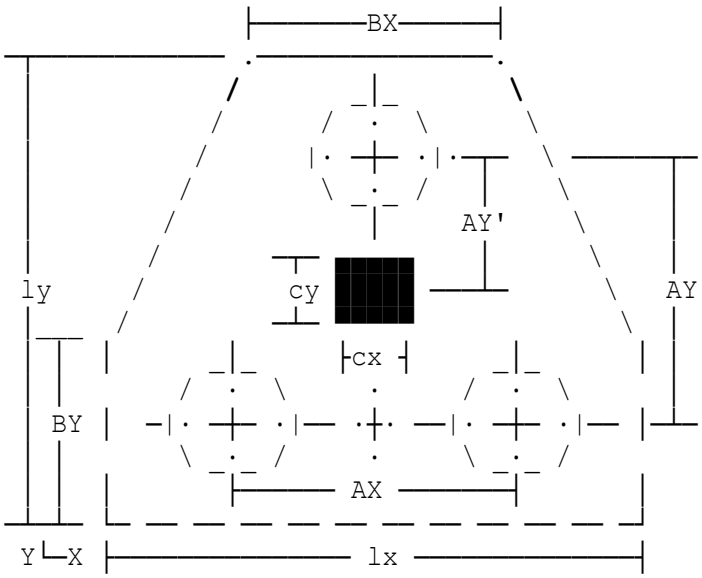

Pilecap for 3 piles

Design to EC2 Part 1-1.

Pilecap shaped as shown with main reinforcement parallel to principal axes.

Use ultimate values for load and moment.

Applied moment in the Y-direction only.

Total design load on column	N=4000 kN
Column dimension cx	cx=500 mm
Column dimension cy	cy=500 mm
Design BM at bottom of column	My'=0 kNm
Partial safety factor for steel	gams=1.15
Partial safety factor for conc.	gamc=1.5
Nominal pile diameter	PileD=500 mm
Spacing of pile ctrs in X-dir.	AX=1500 mm
Dist. from pile face to cap edge	olap=300 mm
Spacing of pile ctrs in Y-dir.	AY=1299 mm
Distance AY' to centre of column	AY'=866 mm
Max cap length in X-direction	lx=2600 mm
Min cap dimension in X-direction	BX=1100 mm
Max cap breadth in Y-direction	ly=2400 mm
Min cap dimension in Y-direction	BY=1050 mm
Char yield strength of reinft.	fyk=500 N/mm²
Cover to underside of main bars	Cover=150 mm
Side and top cover to main bars	Scvr=75 mm
Chosen depth of pilecap	h=1080 mm

Design of main steel in X-direction

Main steel diameter	diaX=25 mm
Main steel spacing	SpcX=300 mm

Design of main steel in Y-direction

Main steel diameter	diaY=12 mm
Main steel spacing	SpcY=65 mm

Distribution steel

Distribution steel diameter LSize=25 mm
Spacing of bars LSpac=300 mm
Area of dist steel provided A2=PI*LSize^2*250/LSpac=1636 mm²/m

Check shear resistance in X-direction

Shear force due to ultimate load VEd=N2=1333 kN
Shear resistance VRdc=beta'*CRdc*ks*vRdc*bw*d/1000
=2701 kN
Modified shear resistance VRdc=VRdm=2982 kN

SHEAR SUMMARY Shear force 1333 kN
Shear resistance 2982 kN

Hence section is satisfactory, no shear reinforcement is required.

Check shear resistance in Y-direction

Case 1: Check plane passing through single pile on X-X axis
Shear force due to ultimate load VEd=N1+My'*1000/AY=1333 kN
Shear resistance VRdc=beta'*CRdc*ks*vRdc*bw*d/1000
=2315 kN

SHEAR SUMMARY Shear force 1333 kN
Shear resistance 2315 kN

Hence section is satisfactory, no shear reinforcement is required.

Case 2: Check plane passing through twin-piles
Shear force due to ultimate load VEd=2*N2+My'*1000/AY=2667 kN
Shear resistance VRdc=beta'*CRdc*ks*vRdc*bw*d/1000
=2981 kN
Modified shear resistance VRdc=VRdm=3305 kN

SHEAR SUMMARY Shear force 2667 kN
Shear resistance 3305 kN

Hence section is satisfactory, no shear reinforcement is required.

Check punching shear

Check punching shear at column face:
Eccentricity factor β beta=1
Shear stress at column perimeter vEd=beta*VEd*1000/(uo*d)=2.225 N/mm²
Maximum punching shear resistance vRdmax=0.5*v*fcd=5.581 N/mm²
Shear stress at column perimeter is within the maximum punching shear resistance, hence satisfactory.

MAIN REINFORCEMENT	**Characteristic strength**	**500 N/mm²**
IN X-DIRECTION:	**Diameter of bars**	**25 mm**
SUMMARY	**Spacing**	**300 mm**
	Total number of bars	**8**
	Total area required	**3888 mm²**
	Total area provided	**3927 mm²**
MAIN REINFORCEMENT	**Characteristic strength**	**500 N/mm²**
IN Y-DIRECTION:	**Diameter of bars**	**12 mm**
SUMMARY	**Spacing**	**65 mm**
	Total number of bars	**38**
	Area reqd.@ critical section	**4212 mm²**
	Area prov.@ critical section	**4298 mm²**
DISTRIBUTION	**Characteristic strength**	**500 N/mm²**
REINFORCEMENT	**Diameter of bars**	**25 mm**
SUMMARY		
IN X-DIRECTION:		
In top:	**Number of bars**	**8**
	Spacing of bars	**300 mm**
	Area required	**1620 mm²/m**
	Area provided	**1636 mm²/m**
IN Y-DIRECTION:		
In top:	**Number of bars**	**10**
	Spacing of bars	**300 mm**
	Area required	**1620 mm²/m**
	Area provided	**1636 mm²/m**
SIDE BARS SUMMARY	**Characteristic strength**	**500 N/mm²**
	Diameter of bars	**12 mm**
	Total number of bars	**12**
	Spacing of bars	**250 mm**
QUANTITIES	**Total volume of concrete**	**5.646 m³**
	Total area of formwork	**9.6 m²**

Location: Cap for lightly-loaded column

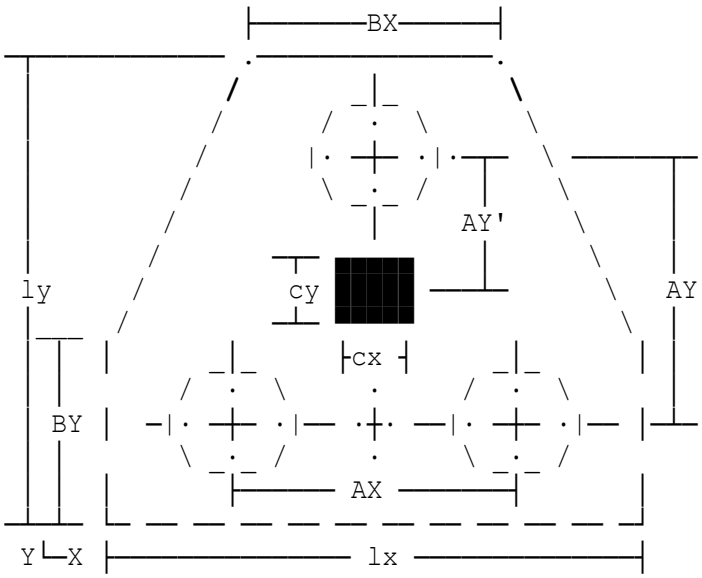

Pilecap for 3 piles

Design to EC2 Part 1-1.

Pilecap shaped as shown with main reinforcement parallel to principal axes.

Use ultimate values for load and moment.

Applied moment in the Y-direction only.

Total design load on column	N=150 kN
Column dimension cx	cx=400 mm
Column dimension cy	cy=400 mm
Design BM at bottom of column	My'=0 kNm
Partial safety factor for steel	gams=1.15
Partial safety factor for conc.	gamc=1.5
Nominal pile diameter	PileD=250 mm
Spacing of pile ctrs in X-dir.	AX=750 mm
Dist. from pile face to cap edge	olap=150 mm
Spacing of pile ctrs in Y-dir.	AY=650 mm
Distance AY' to centre of column	AY'=433 mm
Max cap length in X-direction	lx=1300 mm
Min cap dimension in X-direction	BX=550 mm
Max cap breadth in Y-direction	ly=1200 mm
Min cap dimension in Y-direction	BY=500 mm
Char yield strength of reinft.	fyk=500 N/mm²
Cover to underside of main bars	Cover=150 mm
Side and top cover to main bars	Scvr=75 mm
Chosen depth of pilecap	h=300 mm

Design of main steel in X-direction

Main steel diameter	diaX=12 mm
Main steel spacing	SpcX=250 mm

Design of main steel in Y-direction

Main steel diameter	diaY=12 mm
Main steel spacing	SpcY=185 mm

Distribution steel

Distribution steel diameter	LSize=12 mm
Spacing of bars	LSpac=250 mm
Area of dist steel provided	A2=PI*LSize^2*250/LSpac=452.4 mm²/m

Check shear resistance in X-direction

Shear force due to ultimate load	VEd=N2=50 kN
Shear resistance	VRdc=beta'*CRdc*ks*vRdc*bw*d/1000 =254.5 kN
Modified shear resistance	VRdc=VRdm=267.9 kN

SHEAR SUMMARY	**Shear force**	**50 kN**
	Shear resistance	**267.9 kN**

Hence section is satisfactory, no shear reinforcement is required.

Check shear resistance in Y-direction

Case 1: Check plane passing through single pile on X-X axis

Shear force due to ultimate load	VEd=N1+My'*1000/AY=50 kN
Shear resistance	VRdc=beta'*CRdc*ks*vRdc*bw*d/1000 =111.1 kN

SHEAR SUMMARY	**Shear force**	**50 kN**
	Shear resistance	**111.1 kN**

Hence section is satisfactory, no shear reinforcement is required.

Case 2: Check plane passing through twin-piles

Shear force due to ultimate load	VEd=2*N2+My'*1000/AY=100 kN
Shear enhancement	beta'=4
Shear resistance	VRdc=beta'*CRdc*ks*vRdc*bw*d/1000 =383.9 kN
Modified shear resistance	VRdc=VRdm=384.4 kN

SHEAR SUMMARY	**Shear force**	**100 kN**
	Shear resistance	**384.4 kN**

Hence section is satisfactory, no shear reinforcement is required.

Check punching shear

Check punching shear at column face:

Eccentricity factor β	beta=1
Shear stress at column perimeter	vEd=beta*VEd*1000/(uo*d)=0.7102 N/mm²
Maximum punching shear resistance	vRdmax=0.5*v*fcd=5.581 N/mm²

Shear stress at column perimeter is within the maximum punching shear resistance, hence satisfactory.

Check punching shear at 2d:
Shear stress at control perimeter vEd=beta*VEd*1000/(u1*d)=0.4383 N/mm²
Design punching shear resistance vRdc=(0.18/gamc)*k*(100*p1 *fck)^0.333=0.5701 N/mm²
Enhanced punching shear resist. vRdc=senh*vRdc=0.9526 N/mm²

MAIN REINFORCEMENT	**Characteristic strength**	**500 N/mm²**
IN X-DIRECTION:	**Diameter of bars**	**12 mm**
SUMMARY	**Spacing**	**250 mm**
	Total number of bars	**5**
	Total area required	**540 mm²**
	Total area provided	**565.5 mm²**
MAIN REINFORCEMENT	**Characteristic strength**	**500 N/mm²**
IN Y-DIRECTION:	**Diameter of bars**	**12 mm**
SUMMARY	**Spacing**	**185 mm**
	Total number of bars	**6**
	Area reqd.@ critical section	**492.4 mm²**
	Area prov.@ critical section	**678.6 mm²**
DISTRIBUTION	**Characteristic strength**	**500 N/mm²**
REINFORCEMENT	**Diameter of bars**	**12 mm**
SUMMARY		
IN X-DIRECTION:		
In top:	**Number of bars**	**5**
	Spacing of bars	**250 mm**
	Area required	**450 mm²/m**
	Area provided	**452.4 mm²/m**
IN Y-DIRECTION:		
In top:	**Number of bars**	**6**
	Spacing of bars	**250 mm**
	Area required	**450 mm²/m**
	Area provided	**452.4 mm²/m**
SIDE BARS SUMMARY	**Characteristic strength**	**500 N/mm²**
	Diameter of bars	**12 mm**
	Total number of bars	**3**
	Spacing of bars	**250 mm**
QUANTITIES	**Total volume of concrete**	**0.3893 m³**
	Total area of formwork	**1.331 m²**

Location: Typical pilecap

Design to BS8110(1997) with partial safety factor for steel gammaS=1.15
Bottom layer of main steel is assumed to run in X-direction.

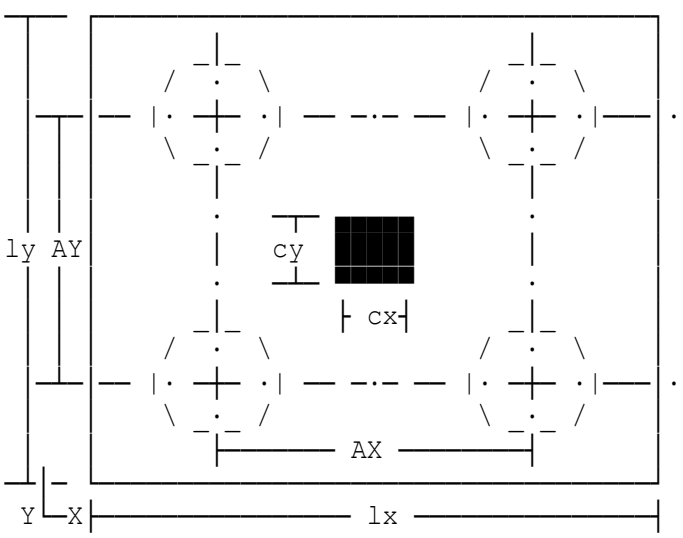

Pilecap for four piles

Designed using bending theory in accordance with BS8110.

Pilecap assumed square (i.e. lx=ly) with main reinforcement arranged in bands parallel to the principal axes and symmetrical about pile centres.

Total ultimate load on column	N=5600 kN
Nominal pile diameter	PileD=450 mm
Column dimension cx	cx=500 mm
Column dimension cy	cy=500 mm
Spc.of pile ctrs in X-direction	AX=1350 mm
Overhang: pile face to cap edge	olap=150 mm
Length of pilecap	lx=2100 mm
Spc.of pile ctrs in Y-direction	AY=1350 mm
Breadth of pilecap	ly=2100 mm
Concrete grade	fcu=35 N/mm²
Steel strength	fy=500 N/mm²
Cover to underside of main bars	Cover=150 mm
Side and top cover to main bars	Scvr=75 mm
Chosen depth of pilecap	h=900 mm

Design of main steel in X-direction

Main steel diameter	diaX=16 mm
Main steel spacing	SpcX=100 mm

Design of main steel in Y-direction

Main steel diameter	diaY=12 mm
Main steel spacing	SpcY=55 mm

Distribution steel

Diameter of bar	LSize=16 mm
Spacing of bars	LSpac=170 mm

MAIN REINFORCEMENT	**Characteristic strength**	**500 N/mm²**
IN X-DIRECTION:	**Diameter of bars**	**16 mm**
SUMMARY	**Spacing**	**100 mm**
	Total number of bars	**20**
	Total area required	**3946.6 mm²**
	Total area provided	**4021.2 mm²**
	Volume of steel	**9160.4 cm³**
	Weight of steel	**71.909 kg**
MAIN REINFORCEMENT	**Characteristic strength**	**500 N/mm²**
IN Y-DIRECTION:	**Diameter of bars**	**12 mm**
SUMMARY	**Spacing**	**55 mm**
	Total number of bars	**36**
	Total area required	**4035.1 mm²**
	Total area provided	**4071.5 mm²**
	Volume of steel	**9779.8 cm³**
	Weight of steel	**76.771 kg**
DISTRIBUTION REINFORCEMENT	**Characteristic strength**	**500 N/mm²**
SUMMARY	**Diameter of bars**	**16 mm**
IN X-DIRECTION:		
In top:	**Number of bars**	**12**
	Spacing of bars	**170 mm**
	Area required	**1170 mm²/m**
	Area provided	**1182.7 mm²/m**
	Volume of steel	**4704.8 cm³**
	Weight of steel	**36.933 kg**
IN Y-DIRECTION:		
In top:	**Number of bars**	**12**
	Spacing of bars	**170 mm**
	Area required	**1170 mm²/m**
	Area provided	**1182.7 mm²/m**
	Volume of steel	**4704.8 cm³**
	Weight of steel	**36.933 kg**
SIDE BARS SUMMARY	**Characteristic strength**	**500 N/mm²**
	Diameter of bars	**12 mm**
	Total number of bars	**6**
	Spacing of bars	**250 mm**
	Volume of steel	**2989.2 cm³**
	Weight of steel	**23.465 kg**
QUANTITIES	**Total concrete volume**	**3.969 m³**
	Total area of formwork	**7.56 m²**
	Total volume of steel	**31339 cm³**
	Total weight of steel	**246.01 kg**
	Approx.self-weight of pilecap	**133.36 kN**
	Approx.total load on each pile	**1434 kN**

Location: Large, heavily-loaded pilecap with mild steel reinf.

Design to BS8110(1997) with partial safety factor for steel gammaS=1.15
Bottom layer of main steel is assumed to run in X-direction.

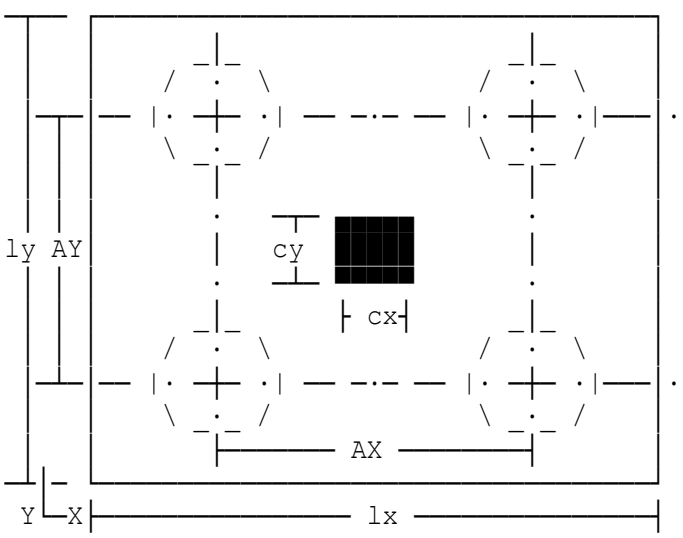

Pilecap for four piles

Designed using bending theory in accordance with BS8110.

Pilecap assumed square (i.e. lx=ly) with main reinforcement arranged in bands parallel to the principal axes and symmetrical about pile centres.

Total ultimate load on column	N=10000 kN
Nominal pile diameter	PileD=450 mm
Column dimension cx	cx=500 mm
Column dimension cy	cy=500 mm
Spc.of pile ctrs in X-direction	AX=2000 mm
Overhang: pile face to cap edge	olap=400 mm
Length of pilecap	lx=3250 mm
Spc.of pile ctrs in Y-direction	AY=2000 mm
Breadth of pilecap	ly=3250 mm
Concrete grade	fcu=25 N/mm²
Steel strength	fy=250 N/mm²
Cover to underside of main bars	Cover=150 mm
Side and top cover to main bars	Scvr=75 mm
Chosen depth of pilecap	h=1910 mm

Design of main steel in X-direction

Main steel diameter	diaX=20 mm
Main steel spacing	SpcX=65 mm

Design of main steel in Y-direction

Main steel diameter	diaY=20 mm
Main steel spacing	SpcY=65 mm

Distribution steel

Diameter of bar	LSize=32 mm
Spacing of bars	LSpac=175 mm

MAIN REINFORCEMENT	**Characteristic strength**	**250 N/mm²**
IN X-DIRECTION:	**Diameter of bars**	**20 mm**
SUMMARY	**Spacing**	**65 mm**
	Total number of bars	**48**
	Total area required	**14898 mm²**
	Total area provided	**15080 mm²**
	Volume of steel	**74946 cm³**
	Weight of steel	**588.32 kg**
MAIN REINFORCEMENT	**Characteristic strength**	**250 N/mm²**
IN Y-DIRECTION:	**Diameter of bars**	**20 mm**
SUMMARY	**Spacing**	**65 mm**
	Total number of bars	**48**
	Total area required	**14898 mm²**
	Total area provided	**15080 mm²**
	Volume of steel	**74946 cm³**
	Weight of steel	**588.32 kg**
DISTRIBUTION REINFORCEMENT	**Characteristic strength**	**250 N/mm²**
SUMMARY	**Diameter of bars**	**32 mm**
IN X-DIRECTION:		
In top:	**Number of bars**	**18**
	Spacing of bars	**175 mm**
	Area required	**4584 mm²/m**
	Area provided	**4595.7 mm²/m**
	Volume of steel	**44877 cm³**
	Weight of steel	**352.28 kg**
IN Y-DIRECTION:		
In top:	**Number of bars**	**18**
	Spacing of bars	**175 mm**
	Area required	**4584 mm²/m**
	Area provided	**4595.7 mm²/m**
	Volume of steel	**44877 cm³**
	Weight of steel	**352.28 kg**
SIDE BARS SUMMARY	**Characteristic strength**	**250 N/mm²**
	Diameter of bars	**12 mm**
	Total number of bars	**14**
	Spacing of bars	**250 mm**
	Volume of steel	**10696 cm³**
	Weight of steel	**83.961 kg**
QUANTITIES	**Total concrete volume**	**20.174 m³**
	Total area of formwork	**24.83 m²**
	Total volume of steel	**250341 cm³**
	Total weight of steel	**1965.2 kg**
	Approx.self-weight of pilecap	**677.86 kN**
	Approx.total load on each pile	**2670 kN**

Location: Small cap with closely-spaced piles.

Design to BS8110(1997) with partial safety factor for steel gammaS=1.15
Bottom layer of main steel is assumed to run in X-direction.

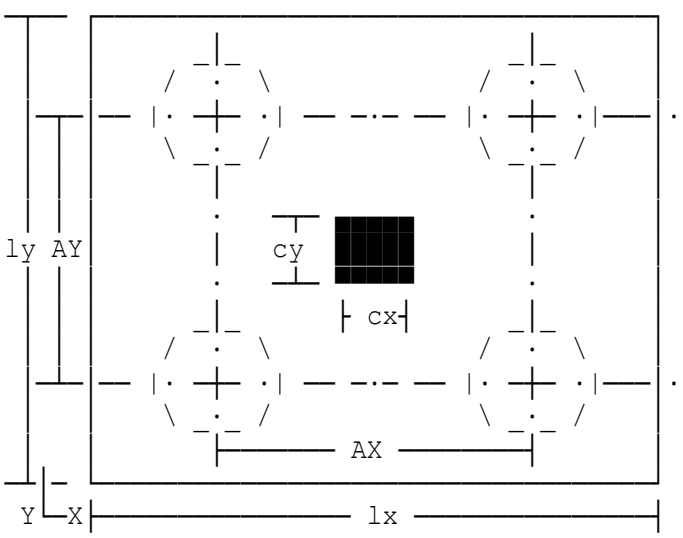

Pilecap for four piles

Designed using bending theory in accordance with BS8110.

Pilecap assumed square (i.e. lx=ly) with main reinforcement arranged in bands parallel to the principal axes and symmetrical about pile centres.

Total ultimate load on column	N=5600 kN
Nominal pile diameter	PileD=250 mm
Column dimension cx	cx=350 mm
Column dimension cy	cy=350 mm
Spc.of pile ctrs in X-direction	AX=500 mm
Overhang: pile face to cap edge	olap=150 mm
Length of pilecap	lx=1050 mm
Spc.of pile ctrs in Y-direction	AY=500 mm
Breadth of pilecap	ly=1050 mm
Concrete grade	fcu=60 N/mm²
Steel strength	fy=500 N/mm²
Cover to underside of main bars	Cover=150 mm
Side and top cover to main bars	Scvr=75 mm
Chosen depth of pilecap	h=990 mm

Design of main steel in X-direction

Main steel diameter	diaX=12 mm
Main steel spacing	SpcX=80 mm

Design of main steel in Y-direction

Main steel diameter	diaY=12 mm
Main steel spacing	SpcY=80 mm

Distribution steel

Diameter of bar	LSize=16 mm
Spacing of bars	LSpac=155 mm

MAIN REINFORCEMENT	**Characteristic strength**	**500 N/mm²**
IN X-DIRECTION:	**Diameter of bars**	**12 mm**
SUMMARY	**Spacing**	**80 mm**
	Total number of bars	**12**
	Total area required	**1351.4 mm²**
	Total area provided	**1357.2 mm²**
	Volume of steel	**2513.5 cm³**
	Weight of steel	**19.731 kg**
MAIN REINFORCEMENT	**Characteristic strength**	**500 N/mm²**
IN Y-DIRECTION:	**Diameter of bars**	**12 mm**
SUMMARY	**Spacing**	**80 mm**
	Total number of bars	**12**
	Total area required	**1351.4 mm²**
	Total area provided	**1357.2 mm²**
	Volume of steel	**2513.5 cm³**
	Weight of steel	**19.731 kg**
DISTRIBUTION REINFORCEMENT	**Characteristic strength**	**500 N/mm²**
SUMMARY	**Diameter of bars**	**16 mm**
IN X-DIRECTION:		
In top:	**Number of bars**	**6**
	Spacing of bars	**155 mm**
	Area required	**1287 mm²/m**
	Area provided	**1297.2 mm²/m**
	Volume of steel	**1085.7 cm³**
	Weight of steel	**8.523 kg**
IN Y-DIRECTION:		
In top:	**Number of bars**	**6**
	Spacing of bars	**155 mm**
	Area required	**1287 mm²/m**
	Area provided	**1297.2 mm²/m**
	Volume of steel	**1085.7 cm³**
	Weight of steel	**8.523 kg**
SIDE BARS SUMMARY	**Characteristic strength**	**500 N/mm²**
	Diameter of bars	**12 mm**
	Total number of bars	**8**
	Spacing of bars	**250 mm**
	Volume of steel	**1986 cm³**
	Weight of steel	**15.59 kg**
QUANTITIES	**Total concrete volume**	**1.0915 m³**
	Total area of formwork	**4.158 m²**
	Total volume of steel	**9184.4 cm³**
	Total weight of steel	**72.098 kg**
	Approx.self-weight of pilecap	**36.674 kN**
	Approx.total load on each pile	**1410 kN**

Location: Ex1 - Typical pilecap

Bottom layer of main steel is assumed to run in X-direction.

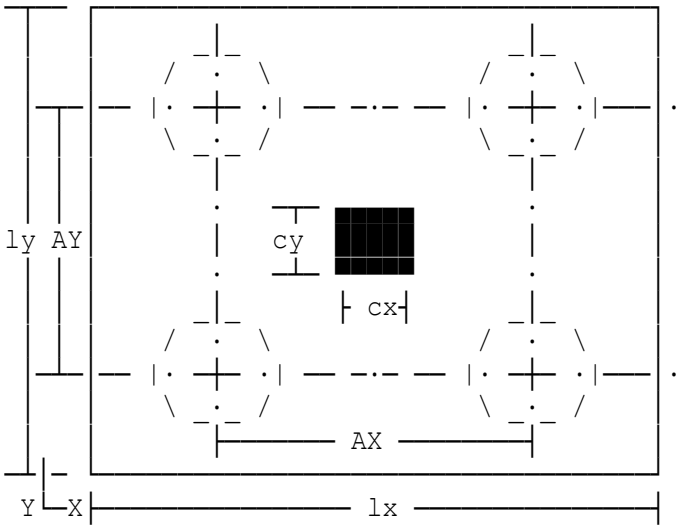

Pilecap for four piles

Designed using bending theory to EC2 Part 1-1.

Pilecap assumed square (i.e. lx=ly) with main reinforcement arranged in bands parallel to the principal axes and symmetrical about the pile centres.

Use ultimate values for load and moment.

Total design load on column	N=3600 kN
Column dimension cx	cx=500 mm
Column dimension cy	cy=500 mm
Nominal pile diameter	PileD=450 mm
Partial safety factor for steel	gams=1.15
Partial safety factor for conc.	gamc=1.5
Spacing of pile ctrs in X-dir.	AX=1350 mm
Overhang: pile face to cap edge	olap=150 mm
Length of pilecap	lx=2100 mm
Spacing of pile ctrs in Y-dir.	AY=1350 mm
Breadth of pilecap	ly=2100 mm
Char yield strength of reinft.	fyk=500 N/mm²
Cover to underside of main bars	Cover=150 mm
Side and top cover to main bars	Scvr=75 mm
Chosen depth of pilecap	h=1000 mm

Design of main steel in X-direction

Main steel diameter	diaX=12 mm
Main steel spacing	SpcX=70 mm

Design of main steel in Y-direction

Main steel diameter	diaY=12 mm
Main steel spacing	SpcY=70 mm

Distribution steel

Distribution steel diameter	LSize=12 mm
Spacing of bars	LSpac=75 mm
Area of dist.steel provided	A2=PI*LSize^2*250/LSpac=1508 mm²/m

Check shear resistance in X-direction

Shear force due to ultimate load	VEd=N/2+Mx'*1000/AX=1800 kN
Shear resistance	VRdc=beta'*CRdc*ks*vRdc*bw*d/1000 =2262 kN
Modified shear resistance	VRdc=VRdm=2545 kN

SHEAR SUMMARY	**Shear force**	**1800 kN**
	Shear resistance	**2545 kN**

Hence section is satisfactory, no shear reinforcement is required.

Check shear resistance in Y-direction

Shear force due to ultimate load	VEd=N/2+My'*1000/AY=1800 kN
Shear resistance	VRdc=beta'*CRdc*ks*vRdc*bw*d/1000 =2246 kN
Modified shear resistance	VRdc=VRdm=2517 kN

SHEAR SUMMARY	**Shear force**	**1800 kN**
	Shear resistance	**2517 kN**

Hence section is satisfactory, no shear reinforcement is required.

Check punching shear

Check punching shear at column face:

Eccentricity factor β	beta=1
Shear stress at column perimeter	vEd=beta*VEd*1000/(uo*d)=2.163 N/mm²
Maximum punching shear resistance	vRdmax=0.5*v*fcd=5.581 N/mm²

Shear stress at column perimeter is within the maximum punching shear resistance, hence satisfactory.

MAIN REINFORCEMENT	**Characteristic strength**	**500 N/mm²**
IN X-DIRECTION:	**Diameter of bars**	**12 mm**
SUMMARY	**Spacing**	**70 mm**
	Total number of bars	**28**
	Total area required	**3150 mm²**
	Total area provided	**3167 mm²**

MAIN REINFORCEMENT	**Characteristic strength**	**500 N/mm²**
IN Y-DIRECTION:	**Diameter of bars**	**12 mm**
SUMMARY	**Spacing**	**70 mm**
	Total number of bars	**28**
	Total area required	**3150 mm²**
	Total area provided	**3167 mm²**

DISTRIBUTION REINFORCEMENT SUMMARY	**Characteristic strength**	**500 N/mm²**
	Diameter of bars	**12 mm**
IN X-DIRECTION:		
In top:	**Number of bars**	**26**
	Spacing of bars	**75 mm**
	Area required	**1500 mm²/m**
	Area provided	**1508 mm²/m**
IN Y-DIRECTION:		
In top:	**Number of bars**	**26**
	Spacing of bars	**75 mm**
	Area required	**1500 mm²/m**
	Area provided	**1508 mm²/m**
SIDE BARS SUMMARY	**Characteristic strength**	**500 N/mm²**
	Diameter of bars	**12 mm**
	Total number of bars	**8**
	Spacing of bars	**250 mm**
QUANTITIES	**Total concrete volume**	**4.41 m³**
	Total area of formwork	**8.4 m²**

Location: Ex2 - Large, heavily-loaded pilecap with mild steel reinf.

Bottom layer of main steel is assumed to run in X-direction.

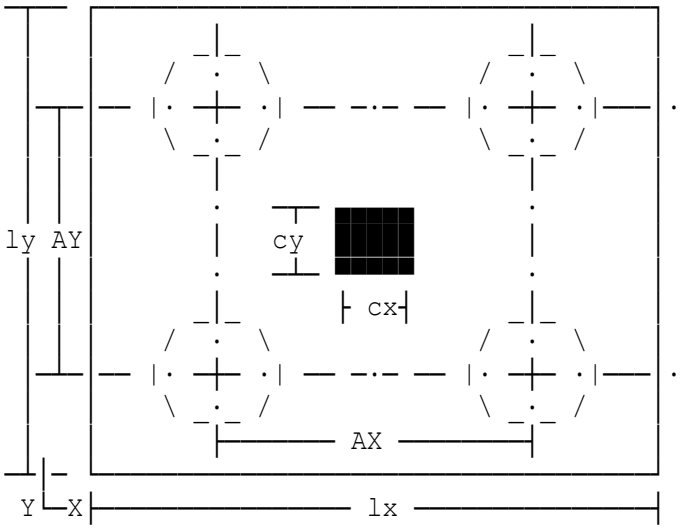

Pilecap for four piles

Designed using bending theory to EC2 Part 1-1.

Pilecap assumed square (i.e. lx=ly) with main reinforcement arranged in bands parallel to the principal axes and symmetrical about the pile centres.

Use ultimate values for load and moment.

Total design load on column	N=5000 kN
Column dimension cx	cx=500 mm
Column dimension cy	cy=500 mm
Nominal pile diameter	PileD=450 mm
Partial safety factor for steel	gams=1.15
Partial safety factor for conc.	gamc=1.5
Spacing of pile ctrs in X-dir.	AX=2000 mm
Overhang: pile face to cap edge	olap=400 mm
Length of pilecap	lx=3250 mm
Spacing of pile ctrs in Y-dir.	AY=2000 mm
Breadth of pilecap	ly=3250 mm
Char yield strength of reinft.	fyk=500 N/mm²
Cover to underside of main bars	Cover=150 mm
Side and top cover to main bars	Scvr=75 mm
Chosen depth of pilecap	h=1440 mm

Design of main steel in X-direction

Main steel diameter	diaX=16 mm
Main steel spacing	SpcX=90 mm

Design of main steel in Y-direction

Main steel diameter	diaY=16 mm
Main steel spacing	SpcY=90 mm

Distribution steel

Distribution steel diameter	LSize=20 mm
Spacing of bars	LSpac=145 mm
Area of dist.steel provided	A2=PI*LSize^2*250/LSpac=2167 mm²/m

Check shear resistance in X-direction

```
Shear force due to ultimate load  VEd=N/2+Mx'*1000/AX=2500 kN
Shear resistance                  VRdc=beta'*CRdc*ks*vRdc*bw*d/1000
                                      =4219 kN
Modified shear resistance         VRdc=VRdm=4349 kN
```

SHEAR SUMMARY	**Shear force**	**2500 kN**
	Shear resistance	**4349 kN**

Hence section is satisfactory, no shear reinforcement is required.

Check shear resistance in Y-direction

```
Shear force due to ultimate load  VEd=N/2+My'*1000/AY=2500 kN
Shear resistance                  VRdc=beta'*CRdc*ks*vRdc*bw*d/1000
                                      =4191 kN
Modified shear resistance         VRdc=VRdm=4306 kN
```

SHEAR SUMMARY	**Shear force**	**2500 kN**
	Shear resistance	**4306 kN**

Hence section is satisfactory, no shear reinforcement is required.

Check punching shear

```
Check punching shear at column face:
Eccentricity factor β             beta=1
Shear stress at column perimeter  vEd=beta*VEd*1000/(uo*d)=1.975 N/mm²
Maximum punching shear resistance vRdmax=0.5*v*fcd=5.581 N/mm²
Shear stress at column perimeter is within the maximum punching shear
resistance, hence satisfactory.

Check punching shear at 2d:
Shear stress at control perimeter vEd=beta*VEd*1000/(u1*d)=0.6735 N/mm²
Design punching shear resistance  vRdc=(0.18/gamc)*k*(100*p1
                                       *fck)^0.333=0.3163 N/mm²
Enhancement factor to be used     senh=4.117
Enhanced punching shear resist.   vRdc=senh*vRdc=1.302 N/mm²
Design punching shear resistance  vRdc=senh*0.035*k^1.5*fck^0.5
                                      =1.347 N/mm²
```

MAIN REINFORCEMENT	**Characteristic strength**	**500 N/mm²**
IN X-DIRECTION:	**Diameter of bars**	**16 mm**
SUMMARY	**Spacing**	**90 mm**
	Total number of bars	**35**
	Total area required	**7020 mm²**
	Total area provided	**7037 mm²**

MAIN REINFORCEMENT	**Characteristic strength**	**500 N/mm²**
IN Y-DIRECTION:	**Diameter of bars**	**16 mm**
SUMMARY	**Spacing**	**90 mm**
	Total number of bars	**35**
	Total area required	**7020 mm²**
	Total area provided	**7037 mm²**

DISTRIBUTION REINFORCEMENT SUMMARY	**Characteristic strength**	**500 N/mm²**
	Diameter of bars	**20 mm**
IN X-DIRECTION:		
In top:	**Number of bars**	**22**
	Spacing of bars	**145 mm**
	Area required	**2160 mm²/m**
	Area provided	**2167 mm²/m**
IN Y-DIRECTION:		
In top:	**Number of bars**	**22**
	Spacing of bars	**145 mm**
	Area required	**2160 mm²/m**
	Area provided	**2167 mm²/m**
SIDE BARS SUMMARY	**Characteristic strength**	**500 N/mm²**
	Diameter of bars	**12 mm**
	Total number of bars	**10**
	Spacing of bars	**250 mm**
QUANTITIES	**Total concrete volume**	**15.21 m³**
	Total area of formwork	**18.72 m²**

Location: Ex3 - Small cap with closely-spaced piles.

Bottom layer of main steel is assumed to run in X-direction.

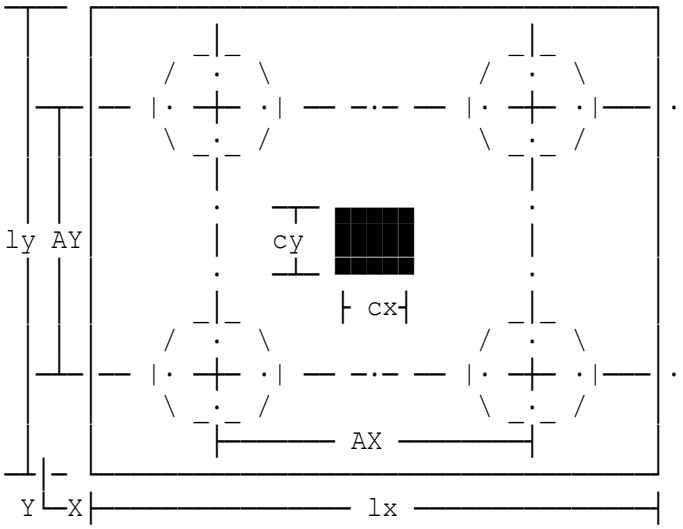

Pilecap for four piles

Designed using bending theory to EC2 Part 1-1.

Pilecap assumed square (i.e. lx=ly) with main reinforcement arranged in bands parallel to the principal axes and symmetrical about the pile centres.

Use ultimate values for load and moment.

Total design load on column	N=3000 kN
Column dimension cx	cx=350 mm
Column dimension cy	cy=350 mm
Nominal pile diameter	PileD=250 mm
Partial safety factor for steel	gams=1.15
Partial safety factor for conc.	gamc=1.5
Spacing of pile ctrs in X-dir.	AX=500 mm
Overhang: pile face to cap edge	olap=150 mm
Length of pilecap	lx=1050 mm
Spacing of pile ctrs in Y-dir.	AY=500 mm
Breadth of pilecap	ly=1050 mm
Char yield strength of reinft.	fyk=500 N/mm²
Cover to underside of main bars	Cover=150 mm
Side and top cover to main bars	Scvr=75 mm
Chosen depth of pilecap	h=990 mm

Design of main steel in X-direction

Main steel diameter	diaX=20 mm
Main steel spacing	SpcX=175 mm

Design of main steel in Y-direction

Main steel diameter	diaY=16 mm
Main steel spacing	SpcY=110 mm

Distribution steel

Distribution steel diameter	LSize=20 mm
Spacing of bars	LSpac=180 mm
Area of dist.steel provided	A2=PI*LSize^2*250/LSpac=1745 mm²/m

Check shear resistance in X-direction

Shear force due to ultimate load	VEd=N/2+Mx'*1000/AX=1500 kN
Shear enhancement	beta'=4
Shear resistance	VRdc=beta'*CRdc*ks*vRdc*bw*d/1000 =1379 kN
Modified shear resistance	VRdc=VRdm=1571 kN

SHEAR SUMMARY	**Shear force**	**1500 kN**
	Shear resistance	**1571 kN**

Hence section is satisfactory, no shear reinforcement is required.

Check shear resistance in Y-direction

Shear force due to ultimate load	VEd=N/2+My'*1000/AY=1500 kN
Shear enhancement	beta'=4
Shear resistance	VRdc=beta'*CRdc*ks*vRdc*bw*d/1000 =1346 kN
Modified shear resistance	VRdc=VRdm=1545 kN

SHEAR SUMMARY	**Shear force**	**1500 kN**
	Shear resistance	**1545 kN**

Hence section is satisfactory, no shear reinforcement is required.

Check punching shear

Check punching shear at column face:

Eccentricity factor β	beta=1
Shear stress at column perimeter	vEd=beta*VEd*1000/(uo*d)=2.639 N/mm²
Maximum punching shear resistance	vRdmax=0.5*v*fcd=8 N/mm²

Shear stress at column perimeter is within the maximum punching shear resistance, hence satisfactory.

MAIN REINFORCEMENT	**Characteristic strength**	**500 N/mm²**
IN X-DIRECTION:	**Diameter of bars**	**20 mm**
SUMMARY	**Spacing**	**175 mm**
	Total number of bars	**6**
	Total area required	**1823 mm²**
	Total area provided	**1885 mm²**

MAIN REINFORCEMENT	**Characteristic strength**	**500 N/mm²**
IN Y-DIRECTION:	**Diameter of bars**	**16 mm**
SUMMARY	**Spacing**	**110 mm**
	Total number of bars	**9**
	Total area required	**1778 mm²**
	Total area provided	**1810 mm²**

DISTRIBUTION REINFORCEMENT SUMMARY	**Characteristic strength**	**500 N/mm²**
	Diameter of bars	**20 mm**
IN X-DIRECTION:		
In top:	**Number of bars**	**5**
	Spacing of bars	**180 mm**
	Area required	**1736 mm²/m**
	Area provided	**1745 mm²/m**
IN Y-DIRECTION:		
In top:	**Number of bars**	**5**
	Spacing of bars	**180 mm**
	Area required	**1736 mm²/m**
	Area provided	**1745 mm²/m**
SIDE BARS SUMMARY	**Characteristic strength**	**500 N/mm²**
	Diameter of bars	**12 mm**
	Total number of bars	**8**
	Spacing of bars	**250 mm**
QUANTITIES	**Total concrete volume**	**1.091 m³**
	Total area of formwork	**4.158 m²**

Location: Typical pilecap

Design to BS8110(1997) with partial safety factor for steel gammaS=1.15
Bottom layer of main steel is assumed to run in X-direction.

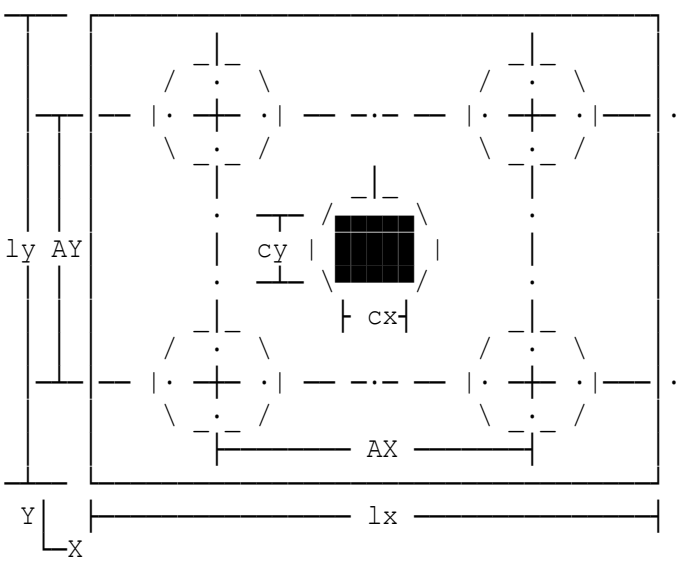

Pilecap for five piles

Designed using bending theory in accordance with BS8110.

Pilecap assumed square (i.e. lx=ly) with main reinforcement arranged in bands parallel to the principal axes and symmetrical about pile centres (i.e. chain lines in adjoining diagram).

Total ultimate load on column	N=7000 kN
Column dimension cx	cx=500 mm
Column dimension cy	cy=500 mm
Nominal pile diameter	PileD=450 mm
Spec.min.spacing of pile centres	spc=1350 mm
Spc.of pile ctrs in X-direction	AX=1910 mm
Overhang: pile face to cap edge	olap=150 mm
Length of pilecap	lx=2660 mm
Spc.of pile ctrs in Y-direction	AY=1910 mm
Breadth of pilecap	ly=2660 mm
Concrete grade	fcu=35 N/mm²
Steel strength	fy=500 N/mm²
Cover to underside of main bars	Cover=150 mm
Side and top cover to main bars	Scvr=75 mm
Chosen depth of pilecap	h=1420 mm

Design of main steel in X-direction

Main steel diameter	diaX=16 mm
Main steel spacing	SpcX=100 mm

Design of main steel in Y-direction

Main steel diameter	diaY=16 mm
Main steel spacing	SpcY=100 mm

Distribution steel

Diameter of bar	LSize=20 mm
Spacing of bars	LSpac=170 mm

MAIN REINFORCEMENT	**Characteristic strength**	**500 N/mm²**
IN X-DIRECTION:	**Diameter of bars**	**16 mm**
SUMMARY	**Spacing**	**100 mm**
	Total number of bars	**25**
	Total area required	**4910.4 mm²**
	Total area provided	**5026.5 mm²**
	Volume of steel	**19493 cm³**
	Weight of steel	**153.02 kg**
MAIN REINFORCEMENT	**Characteristic strength**	**500 N/mm²**
IN Y-DIRECTION:	**Diameter of bars**	**16 mm**
SUMMARY	**Spacing**	**100 mm**
	Total number of bars	**25**
	Total area required	**4910.4 mm²**
	Total area provided	**5026.5 mm²**
	Volume of steel	**19493 cm³**
	Weight of steel	**153.02 kg**
DISTRIBUTION REINFORCEMENT	**Characteristic strength**	**500 N/mm²**
SUMMARY	**Diameter of bars**	**20 mm**
IN X-DIRECTION:		
In top:	**Number of bars**	**15**
	Spacing of bars	**170 mm**
	Area required	**1846 mm²/m**
	Area provided	**1848 mm²/m**
	Volume of steel	**11828 cm³**
	Weight of steel	**92.851 kg**
IN Y-DIRECTION:		
In top:	**Number of bars**	**15**
	Spacing of bars	**170 mm**
	Area required	**1846 mm²/m**
	Area provided	**1848 mm²/m**
	Volume of steel	**11828 cm³**
	Weight of steel	**92.851 kg**
SIDE BARS SUMMARY	**Characteristic strength**	**500 N/mm²**
	Diameter of bars	**12 mm**
	Total number of bars	**10**
	Spacing of bars	**250 mm**
	Volume of steel	**6259.9 cm³**
	Weight of steel	**49.141 kg**
QUANTITIES	**Total concrete volume**	**10.047 m³**
	Total area of formwork	**15.109 m²**
	Total volume of steel	**68902 cm³**
	Total weight of steel	**540.88 kg**
	Approx.self-weight of pilecap	**337.59 kN**
	Approx.total load on each pile	**1468 kN**

Location: Heavily-loaded pilecap reinforced with mild steel

Design to BS8110(1997) with partial safety factor for steel gammaS=1.15
Bottom layer of main steel is assumed to run in X-direction.

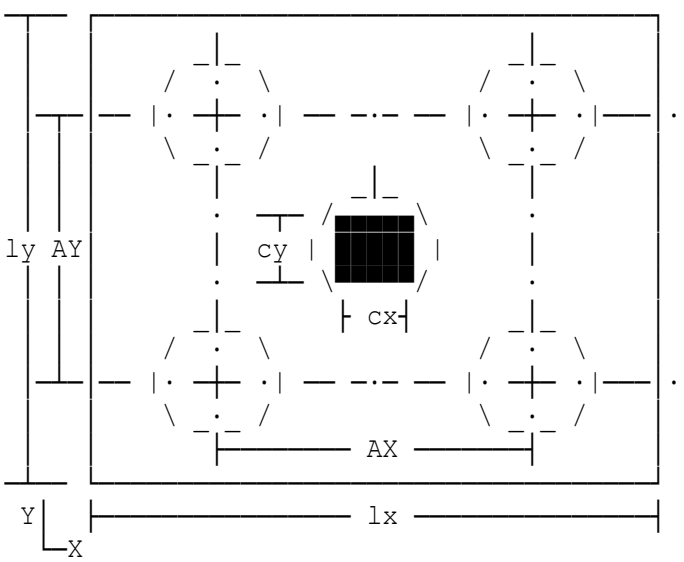

Pilecap for five piles

Designed using bending theory in accordance with BS8110.

Pilecap assumed square (i.e. lx=ly) with main reinforcement arranged in bands parallel to the principal axes and symmetrical about pile centres (i.e. chain lines in adjoining diagram).

Total ultimate load on column	N=12500 kN
Column dimension cx	cx=500 mm
Column dimension cy	cy=500 mm
Nominal pile diameter	PileD=450 mm
Spec.min.spacing of pile centres	spc=1350 mm
Spc.of pile ctrs in X-direction	AX=1910 mm
Overhang: pile face to cap edge	olap=725 mm
Length of pilecap	lx=3810 mm
Spc.of pile ctrs in Y-direction	AY=1910 mm
Breadth of pilecap	ly=3810 mm
Concrete grade	fcu=35 N/mm²
Steel strength	fy=250 N/mm²
Cover to underside of main bars	Cover=150 mm
Side and top cover to main bars	Scvr=75 mm
Chosen depth of pilecap	h=1740 mm

Design of main steel in X-direction

Main steel diameter	diaX=32 mm
Main steel spacing	SpcX=190 mm

Design of main steel in Y-direction

Main steel diameter	diaY=32 mm
Main steel spacing	SpcY=190 mm

Distribution steel

Diameter of bar	LSize=40 mm
Spacing of bars	LSpac=300 mm

MAIN REINFORCEMENT	**Characteristic strength**	**250 N/mm²**
IN X-DIRECTION:	**Diameter of bars**	**32 mm**
SUMMARY	**Spacing**	**190 mm**
	Total number of bars	**20**
	Total area required	**15911 mm²**
	Total area provided	**16085 mm²**
	Volume of steel	**70806 cm³**
	Weight of steel	**555.83 kg**
MAIN REINFORCEMENT	**Characteristic strength**	**250 N/mm²**
IN Y-DIRECTION:	**Diameter of bars**	**32 mm**
SUMMARY	**Spacing**	**190 mm**
	Total number of bars	**20**
	Total area required	**15911 mm²**
	Total area provided	**16085 mm²**
	Volume of steel	**70806 cm³**
	Weight of steel	**555.83 kg**
DISTRIBUTION REINFORCEMENT	**Characteristic strength**	**250 N/mm²**
SUMMARY	**Diameter of bars**	**40 mm**
IN X-DIRECTION:		
In top:	**Number of bars**	**13**
	Spacing of bars	**300 mm**
	Area required	**4176 mm²/m**
	Area provided	**4188.8 mm²/m**
	Volume of steel	**59791 cm³**
	Weight of steel	**469.36 kg**
IN Y-DIRECTION:		
In top:	**Number of bars**	**13**
	Spacing of bars	**300 mm**
	Area required	**4176 mm²/m**
	Area provided	**4188.8 mm²/m**
	Volume of steel	**59791 cm³**
	Weight of steel	**469.36 kg**
SIDE BARS SUMMARY	**Characteristic strength**	**250 N/mm²**
	Diameter of bars	**12 mm**
	Total number of bars	**14**
	Spacing of bars	**250 mm**
	Volume of steel	**12421 cm³**
	Weight of steel	**97.509 kg**
QUANTITIES	**Total concrete volume**	**25.258 m³**
	Total area of formwork	**26.518 m²**
	Total volume of steel	**273615 cm³**
	Total weight of steel	**2147.9 kg**
	Approx.self-weight of pilecap	**848.67 kN**
	Approx.total load on each pile	**2670 kN**

Location: Small pilecap with high-grade concrete

Design to BS8110(1997) with partial safety factor for steel gammaS=1.15
Bottom layer of main steel is assumed to run in X-direction.

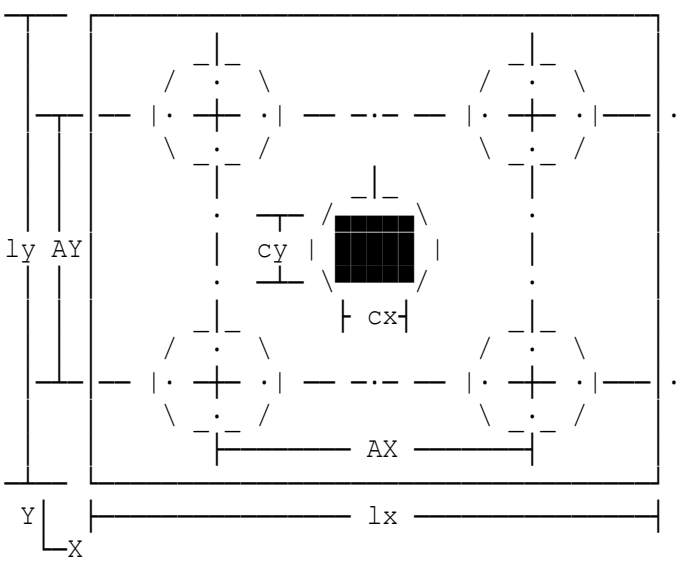

Pilecap for five piles

Designed using bending theory in accordance with BS8110.

Pilecap assumed square (i.e. lx=ly) with main reinforcement arranged in bands parallel to the principal axes and symmetrical about pile centres (i.e. chain lines in adjoining diagram).

Total ultimate load on column	N=7000 kN
Column dimension cx	cx=350 mm
Column dimension cy	cy=350 mm
Nominal pile diameter	PileD=250 mm
Spec.min.spacing of pile centres	spc=500 mm
Spc.of pile ctrs in X-direction	AX=710 mm
Overhang: pile face to cap edge	olap=170 mm
Length of pilecap	lx=1300 mm
Spc.of pile ctrs in Y-direction	AY=710 mm
Breadth of pilecap	ly=1300 mm
Concrete grade	fcu=60 N/mm²
Steel strength	fy=500 N/mm²
Cover to underside of main bars	Cover=150 mm
Side and top cover to main bars	Scvr=75 mm
Chosen depth of pilecap	h=990 mm

Design of main steel in X-direction

Main steel diameter	diaX=12 mm
Main steel spacing	SpcX=80 mm

Design of main steel in Y-direction

Main steel diameter	diaY=12 mm
Main steel spacing	SpcY=80 mm

Distribution steel

Diameter of bar	LSize=16 mm
Spacing of bars	LSpac=155 mm

MAIN REINFORCEMENT	**Characteristic strength**	**500 N/mm²**
IN X-DIRECTION:	**Diameter of bars**	**12 mm**
SUMMARY	**Spacing**	**80 mm**
	Total number of bars	**15**
	Total area required	**1673.1 mm²**
	Total area provided	**1696.5 mm²**
	Volume of steel	**3498.1 cm³**
	Weight of steel	**27.46 kg**
MAIN REINFORCEMENT	**Characteristic strength**	**500 N/mm²**
IN Y-DIRECTION:	**Diameter of bars**	**12 mm**
SUMMARY	**Spacing**	**80 mm**
	Total number of bars	**15**
	Total area required	**1673.1 mm²**
	Total area provided	**1696.5 mm²**
	Volume of steel	**3498.1 cm³**
	Weight of steel	**27.46 kg**
DISTRIBUTION REINFORCEMENT	**Characteristic strength**	**500 N/mm²**
SUMMARY	**Diameter of bars**	**16 mm**
IN X-DIRECTION:		
In top:	**Number of bars**	**8**
	Spacing of bars	**155 mm**
	Area required	**1287 mm²/m**
	Area provided	**1297.2 mm²/m**
	Volume of steel	**1849.8 cm³**
	Weight of steel	**14.521 kg**
IN Y-DIRECTION:		
In top:	**Number of bars**	**8**
	Spacing of bars	**155 mm**
	Area required	**1287 mm²/m**
	Area provided	**1297.2 mm²/m**
	Volume of steel	**1849.8 cm³**
	Weight of steel	**14.521 kg**
SIDE BARS SUMMARY	**Characteristic strength**	**500 N/mm²**
	Diameter of bars	**12 mm**
	Total number of bars	**8**
	Spacing of bars	**250 mm**
	Volume of steel	**2438.4 cm³**
	Weight of steel	**19.141 kg**
QUANTITIES	**Total concrete volume**	**1.6731 m³**
	Total area of formwork	**5.148 m²**
	Total volume of steel	**13134 cm³**
	Total weight of steel	**103.1 kg**
	Approx.self-weight of pilecap	**56.216 kN**
	Approx.total load on each pile	**1412 kN**

Location: Ex1 - Typical pilecap

Bottom layer of main steel is assumed to run in X-direction.

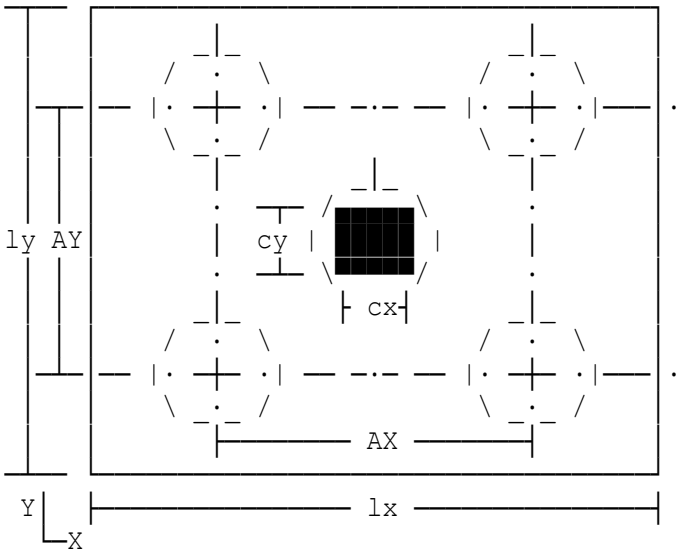

Pilecap for five piles

Designed using bending theory to EC2 Part 1-1.

Pilecap assumed square (i.e. lx=ly) with main reinforcement arranged in bands parallel to the principal axes and symmetrical about pile centres.

Use ultimate values for load and moment.

Total design load on column	N=7000 kN
Column dimension cx	cx=500 mm
Column dimension cy	cy=500 mm
Partial safety factor for steel	gams=1.15
Partial safety factor for conc.	gamc=1.5
Nominal pile diameter	PileD=450 mm
Spec.min spacing of pile centres	spc=1350 mm
Spacing of pile ctrs in X-dir	AX=1910 mm
Dist. from pile face to cap edge	olap=150 mm
Length of pilecap	lx=2660 mm
Spacing of pile ctrs in Y-dir	AY=1910 mm
Breadth of pilecap	ly=2660 mm
Char yield strength of reinft.	fyk=500 N/mm²
Cover to underside of main bars	Cover=150 mm
Side and top cover to main bars	Scvr=75 mm
Chosen depth of pilecap	h=1420 mm

Design of main steel in X-direction

Main steel diameter	diaX=25 mm
Main steel spacing	SpcX=225 mm

Design of main steel in Y-direction

Main steel diameter	diaY=25 mm
Main steel spacing	SpcY=225 mm

Distribution steel

Distribution steel diameter	LSize=25 mm
Spacing of bars	LSpac=230 mm
Area of dist. steel provided	A2=PI*LSize^2*250/LSpac=2134 mm²/m

Check shear resistance in X-direction

Shear force due to ultimate load VEd=N/2.5+Mx'*1000/AX=2800 kN
Shear resistance VRdc=beta'*CRdc*ks*vRdc*bw*d/1000
=3265 kN

SHEAR SUMMARY	**Shear force**	**2800 kN**
	Shear resistance	**3265 kN**

Hence section is satisfactory, no shear reinforcement is required.

Check shear resistance in Y-direction

Shear force due to ultimate load VEd=N/2.5+My'*1000/AY=2800 kN
Shear resistance VRdc=beta'*CRdc*ks*vRdc*bw*d/1000
=3231 kN

SHEAR SUMMARY	**Shear force**	**2800 kN**
	Shear resistance	**3231 kN**

Hence section is satisfactory, no shear reinforcement is required.

Check punching shear

Check punching shear at column face:
Eccentricity factor β beta=1
Shear stress at column perimeter vEd=beta*VEd*1000/(uo*d)=2.272 N/mm²
Maximum punching shear resistance vRdmax=0.5*v*fcd=4.973 N/mm²
Shear stress at column perimeter is within the maximum punching shear resistance, hence satisfactory.

Check punching shear at 2d:
Shear stress at control perimeter vEd=beta*VEd*1000/(u1*d)=0.8141 N/mm²
Design punching shear resistance vRdc=(0.18/gamc)*k*(100*p1
*fck)^0.333=0.3084 N/mm²
Enhancement factor to be used senh=4.325
Enhanced punching shear resist. vRdc=senh*vRdc=1.334 N/mm²

MAIN REINFORCEMENT	**Characteristic strength**	**500 N/mm²**
IN X-DIRECTION:	**Diameter of bars**	**25 mm**
SUMMARY	**Spacing**	**225 mm**
	Total number of bars	**12**
	Total area required	**5666 mm²**
	Total area provided	**5890 mm²**

MAIN REINFORCEMENT	**Characteristic strength**	**500 N/mm²**
IN Y-DIRECTION:	**Diameter of bars**	**25 mm**
SUMMARY	**Spacing**	**225 mm**
	Total number of bars	**12**
	Total area required	**5666 mm²**
	Total area provided	**5890 mm²**

DISTRIBUTION REINFORCEMENT SUMMARY	**Characteristic strength**	**500 N/mm²**
	Diameter of bars	**25 mm**
IN X-DIRECTION:		
In top:	**Number of bars**	**11**
	Spacing of bars	**230 mm**
	Area required	**2130 mm²/m**
	Area provided	**2134 mm²/m**
IN Y-DIRECTION:		
In top:	**Number of bars**	**11**
	Spacing of bars	**230 mm**
	Area required	**2130 mm²/m**
	Area provided	**2134 mm²/m**
SIDE BARS SUMMARY	**Characteristic strength**	**500 N/mm²**
	Diameter of bars	**12 mm**
	Total number of bars	**10**
	Spacing of bars	**250 mm**
QUANTITIES	**Total concrete volume**	**10.05 m³**
	Total area of formwork	**15.11 m²**

Location: Ex2 - Heavily-loaded pilecap reinforced with mild steel

Bottom layer of main steel is assumed to run in X-direction.

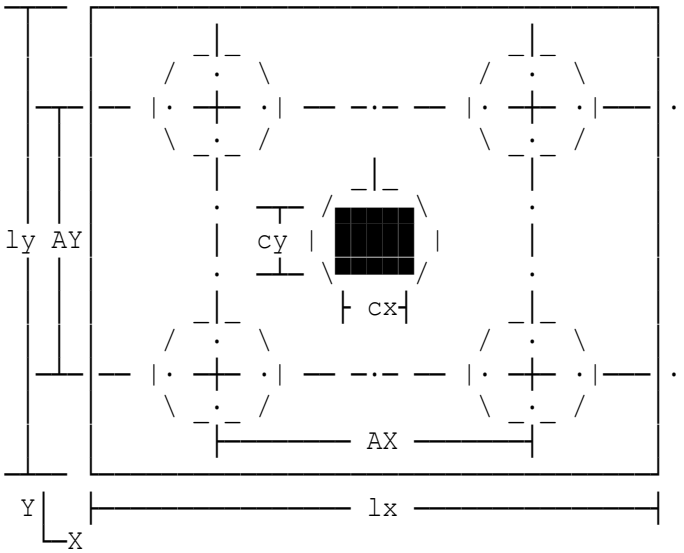

Pilecap for five piles

Designed using bending theory to EC2 Part 1-1.

Pilecap assumed square (i.e. lx=ly) with main reinforcement arranged in bands parallel to the principal axes and symmetrical about pile centres.

Use ultimate values for load and moment.

Total design load on column	N=12500 kN
Column dimension cx	cx=500 mm
Column dimension cy	cy=500 mm
Partial safety factor for steel	gams=1.15
Partial safety factor for conc.	gamc=1.5
Nominal pile diameter	PileD=450 mm
Spec.min spacing of pile centres	spc=1350 mm
Spacing of pile ctrs in X-dir	AX=1910 mm
Dist. from pile face to cap edge	olap=725 mm
Length of pilecap	lx=3810 mm
Spacing of pile ctrs in Y-dir	AY=1910 mm
Breadth of pilecap	ly=3810 mm
Char yield strength of reinft.	fyk=500 N/mm²
Cover to underside of main bars	Cover=150 mm
Side and top cover to main bars	Scvr=75 mm
Chosen depth of pilecap	h=1740 mm

Design of main steel in X-direction

Main steel diameter	diaX=20 mm
Main steel spacing	SpcX=115 mm

Design of main steel in Y-direction

Main steel diameter	diaY=20 mm
Main steel spacing	SpcY=115 mm

Distribution steel

Distribution steel diameter	LSize=20 mm
Spacing of bars	LSpac=120 mm
Area of dist. steel provided	A2=PI*LSize^2*250/LSpac=2618 mm²/m

Check shear resistance in X-direction

Shear force due to ultimate load VEd=N/2.5+Mx'*1000/AX=5000 kN
Shear resistance VRdc=beta'*CRdc*ks*vRdc*bw*d/1000
=5444 kN

SHEAR SUMMARY	**Shear force**	**5000 kN**
	Shear resistance	**5444 kN**

Hence section is satisfactory, no shear reinforcement is required.

Check shear resistance in Y-direction

Shear force due to ultimate load VEd=N/2.5+My'*1000/AY=5000 kN
Shear resistance VRdc=beta'*CRdc*ks*vRdc*bw*d/1000
=5407 kN

SHEAR SUMMARY	**Shear force**	**5000 kN**
	Shear resistance	**5407 kN**

Hence section is satisfactory, no shear reinforcement is required.

Check punching shear

Check punching shear at column face:
Eccentricity factor β beta=1
Shear stress at column perimeter vEd=beta*VEd*1000/(uo*d)=3.205 N/mm²
Maximum punching shear resistance vRdmax=0.5*v*fcd=5.581 N/mm²
Shear stress at column perimeter is within the maximum punching shear resistance, hence satisfactory.

Check punching shear at 2d:
Shear stress at control perimeter vEd=beta*VEd*1000/(u1*d)=1.149 N/mm²
Design punching shear resistance vRdc=(0.18/gamc)*k*(100*p1
*fck)^0.333=0.3213 N/mm²
Enhancement factor to be used senh=5.474
Enhanced punching shear resist. vRdc=senh*vRdc=1.759 N/mm²

MAIN REINFORCEMENT	**Characteristic strength**	**500 N/mm²**
IN X-DIRECTION:	**Diameter of bars**	**20 mm**
SUMMARY	**Spacing**	**115 mm**
	Total number of bars	**32**
	Total area required	**9944 mm²**
	Total area provided	**10053 mm²**

MAIN REINFORCEMENT	**Characteristic strength**	**500 N/mm²**
IN Y-DIRECTION:	**Diameter of bars**	**20 mm**
SUMMARY	**Spacing**	**115 mm**
	Total number of bars	**32**
	Total area required	**9944 mm²**
	Total area provided	**10053 mm²**

DISTRIBUTION REINFORCEMENT SUMMARY	**Characteristic strength**	**500 N/mm²**
	Diameter of bars	**20 mm**
IN X-DIRECTION:		
In top:	**Number of bars**	**31**
	Spacing of bars	**120 mm**
	Area required	**2610 mm²/m**
	Area provided	**2618 mm²/m**
IN Y-DIRECTION:		
In top:	**Number of bars**	**31**
	Spacing of bars	**120 mm**
	Area required	**2610 mm²/m**
	Area provided	**2618 mm²/m**
SIDE BARS SUMMARY	**Characteristic strength**	**500 N/mm²**
	Diameter of bars	**12 mm**
	Total number of bars	**14**
	Spacing of bars	**250 mm**
QUANTITIES	**Total concrete volume**	**25.26 m³**
	Total area of formwork	**26.52 m²**

Location: Ex3 - Small pilecap with high-grade concrete

Bottom layer of main steel is assumed to run in X-direction.

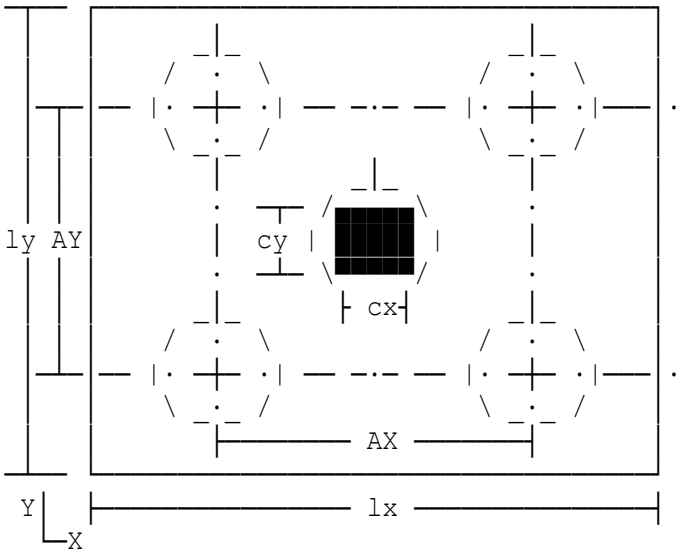

Pilecap for five piles

Designed using bending theory to EC2 Part 1-1.

Pilecap assumed square (i.e. lx=ly) with main reinforcement arranged in bands parallel to the principal axes and symmetrical about pile centres.

Use ultimate values for load and moment.

Total design load on column	N=5000 kN
Column dimension cx	cx=350 mm
Column dimension cy	cy=350 mm
Partial safety factor for steel	gams=1.15
Partial safety factor for conc.	gamc=1.5
Nominal pile diameter	PileD=250 mm
Spec.min spacing of pile centres	spc=500 mm
Spacing of pile ctrs in X-dir	AX=710 mm
Dist. from pile face to cap edge	olap=170 mm
Length of pilecap	lx=1300 mm
Spacing of pile ctrs in Y-dir	AY=710 mm
Breadth of pilecap	ly=1300 mm
Char yield strength of reinft.	fyk=500 N/mm²
Cover to underside of main bars	Cover=150 mm
Side and top cover to main bars	Scvr=75 mm
Chosen depth of pilecap	h=1200 mm

Design of main steel in X-direction

Main steel diameter	diaX=12 mm
Main steel spacing	SpcX=45 mm

Design of main steel in Y-direction

Main steel diameter	diaY=16 mm
Main steel spacing	SpcY=85 mm

Distribution steel

Distribution steel diameter	LSize=25 mm
Spacing of bars	LSpac=225 mm
Area of dist. steel provided	A2=PI*LSize^2*250/LSpac=2182 mm²/m

Check shear resistance in X-direction

Shear force due to ultimate load	VEd=N/2.5+Mx'*1000/AX=2000 kN
Shear resistance	VRdc=beta'*CRdc*ks*vRdc*bw*d/1000 =2072 kN
Modified shear resistance	VRdc=VRdm=2316 kN

SHEAR SUMMARY	**Shear force**	**2000 kN**
	Shear resistance	**2316 kN**

Hence section is satisfactory, no shear reinforcement is required.

Check shear resistance in Y-direction

Shear force due to ultimate load	VEd=N/2.5+My'*1000/AY=2000 kN
Shear resistance	VRdc=beta'*CRdc*ks*vRdc*bw*d/1000 =2028 kN
Modified shear resistance	VRdc=VRdm=2292 kN

SHEAR SUMMARY	**Shear force**	**2000 kN**
	Shear resistance	**2292 kN**

Hence section is satisfactory, no shear reinforcement is required.

Check punching shear

Check punching shear at column face:

Eccentricity factor β	beta=1
Shear stress at column perimeter	vEd=beta*VEd*1000/(uo*d)=2.774 N/mm²
Maximum punching shear resistance	vRdmax=0.5*v*fcd=8 N/mm²

Shear stress at column perimeter is within the maximum punching shear resistance, hence satisfactory.

MAIN REINFORCEMENT	**Characteristic strength**	**500 N/mm²**
IN X-DIRECTION:	**Diameter of bars**	**12 mm**
SUMMARY	**Spacing**	**45 mm**
	Total number of bars	**26**
	Total area required	**2835 mm²**
	Total area provided	**2941 mm²**
MAIN REINFORCEMENT	**Characteristic strength**	**500 N/mm²**
IN Y-DIRECTION:	**Diameter of bars**	**16 mm**
SUMMARY	**Spacing**	**85 mm**
	Total number of bars	**14**
	Total area required	**2802 mm²**
	Total area provided	**2815 mm²**
DISTRIBUTION REINFORCEMENT	**Characteristic strength**	**500 N/mm²**
SUMMARY	**Diameter of bars**	**25 mm**
IN X-DIRECTION:		
In top:	**Number of bars**	**6**
	Spacing of bars	**225 mm**
	Area required	**2181 mm²/m**
	Area provided	**2182 mm²/m**

IN Y-DIRECTION:		
In top:	**Number of bars**	**6**
	Spacing of bars	**225 mm**
	Area required	**2181 mm²/m**
	Area provided	**2182 mm²/m**
SIDE BARS SUMMARY	**Characteristic strength**	**500 N/mm²**
	Diameter of bars	**12 mm**
	Total number of bars	**8**
	Spacing of bars	**250 mm**
QUANTITIES	**Total concrete volume**	**2.028 m³**
	Total area of formwork	**6.24 m²**

Location: Pilecap at G3

Design to BS8110(1997) with partial safety factor for steel gammaS=1.15
Bottom layer of main steel is assumed to run in X-direction.

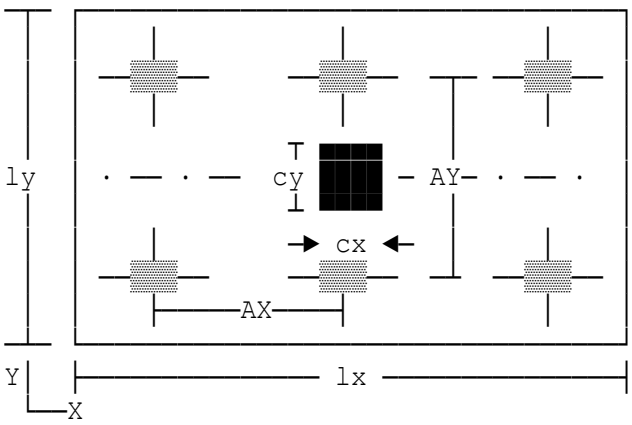

Pilecap for six piles

Designed by Bending Theory
Calculations are in
accordance with BS8110.

Main reinforcement is
arranged in bands parallel
to principal axes and is
symmetrical about pile
centres.
For bond calculations,
any high-yield bars are
assumed Type 2:deformed.

Total ultimate load on column	N=8400 kN
Column dimension cx	cx=500 mm
Column dimension cy	cy=500 mm
Nominal pile diameter	PileD=450 mm
Spc.of pile ctrs in X-direction	AX=1350 mm
Overhang: pile face to cap edge	olap=150 mm
Length of pilecap	lx=3450 mm
Spc.of pile ctrs in Y-direction	AY=1350 mm
Breadth of pilecap	ly=2100 mm
Concrete grade	fcu=35 N/mm²
Steel strength	fy=500 N/mm²
Cover to underside of main bars	Cover=150 mm
Side and top cover to main bars	Scvr=75 mm
Chosen depth of pilecap	h=1730 mm

Design of main steel in X-direction

Main steel diameter	diaX=32 mm
Main steel spacing	SpcX=375 mm

Design of main steel in Y-direction

Main steel diameter	diaY=16 mm
Main steel spacing	SpcY=85 mm

Distribution steel

Diameter of bar	LSize=25 mm
Spacing of bars	LSpac=215 mm

MAIN REINFORCEMENT	**Characteristic strength**	**500 N/mm²**
IN X-DIRECTION:	**Diameter of bars**	**32 mm**
SUMMARY	**Spacing**	**375 mm**
	Total number of bars	**6**
	Total area required	**4780 mm²**
	Total area provided	**4825.5 mm²**
	Volume of steel	**23891 cm³**
	Weight of steel	**187.54 kg**
MAIN REINFORCEMENT	**Characteristic strength**	**500 N/mm²**
IN Y-DIRECTION:	**Diameter of bars**	**16 mm**
SUMMARY	**Spacing**	**85 mm**
	Total number of bars	**39**
	Total area required	**7759.1 mm²**
	Total area provided	**7841.4 mm²**
	Volume of steel	**31350 cm³**
	Weight of steel	**246.1 kg**
DISTRIBUTION REINFORCEMENT	**Characteristic strength**	**500 N/mm²**
SUMMARY	**Diameter of bars**	**25 mm**
IN X-DIRECTION:		
In top:	**Number of bars**	**9**
	Spacing of bars	**215 mm**
	Area required	**2249 mm²/m**
	Area provided	**2283.1 mm²/m**
	Volume of steel	**14579 cm³**
	Weight of steel	**114.44 kg**
IN Y-DIRECTION:		
In top:	**Number of bars**	**16**
	Spacing of bars	**215 mm**
	Area required	**2249 mm²/m**
	Area provided	**2283.1 mm²/m**
	Volume of steel	**15315 cm³**
	Weight of steel	**120.22 kg**
SIDE BARS SUMMARY	**Characteristic strength**	**500 N/mm²**
	Diameter of bars	**12 mm**
	Total number of bars	**28**
	Spacing of bars	**250 mm**
	Volume of steel	**9880.2 cm³**
	Weight of steel	**77.559 kg**
QUANTITIES	**Total concrete volume**	**12.534 m³**
	Total area of formwork	**19.203 m²**
	Total volume of steel	**95015 cm³**
	Total weight of steel	**745.87 kg**
	Approx.self-weight of pilecap	**421.14 kN**
	Approx.total load on each pile	**1471 kN**

Location: Cap for heavily-loaded column using mild steel reinf.

Design to BS8110(1997) with partial safety factor for steel gammaS=1.15
Bottom layer of main steel is assumed to run in X-direction.

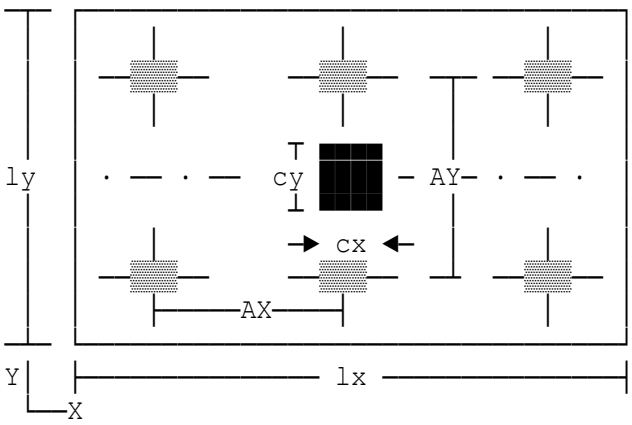

Pilecap for six piles

Designed by Bending Theory
Calculations are in
accordance with BS8110.

Main reinforcement is
arranged in bands parallel
to principal axes and is
symmetrical about pile
centres.
For bond calculations,
any high-yield bars are
assumed Type 2:deformed.

Total ultimate load on column	N=25000 kN
Column dimension cx	cx=500 mm
Column dimension cy	cy=500 mm
Nominal pile diameter	PileD=500 mm
Spc.of pile ctrs in X-direction	AX=1500 mm
Overhang: pile face to cap edge	olap=300 mm
Length of pilecap	lx=4100 mm
Spc.of pile ctrs in Y-direction	AY=1500 mm
Breadth of pilecap	ly=4100 mm
Concrete grade	fcu=35 N/mm²
Steel strength	fy=250 N/mm²
Cover to underside of main bars	Cover=150 mm
Side and top cover to main bars	Scvr=75 mm
Chosen depth of pilecap	h=2840 mm

Design of main steel in X-direction

Main steel diameter	diaX=25 mm
Main steel spacing	SpcX=70 mm

Design of main steel in Y-direction

Main steel diameter	diaY=25 mm
Main steel spacing	SpcY=70 mm

Distribution steel

Diameter of bar	LSize=50 mm
Spacing of bars	LSpac=285 mm

MAIN REINFORCEMENT	**Characteristic strength**	**250 N/mm²**
IN X-DIRECTION:	**Diameter of bars**	**25 mm**
SUMMARY	**Spacing**	**70 mm**
	Total number of bars	**57**
	Total area required	**27946 mm²**
	Total area provided	**27980 mm²**
	Volume of steel	**216564 cm³**
	Weight of steel	**1700 kg**
MAIN REINFORCEMENT	**Characteristic strength**	**250 N/mm²**
IN Y-DIRECTION:	**Diameter of bars**	**25 mm**
SUMMARY	**Spacing**	**70 mm**
	Total number of bars	**57**
	Total area required	**27946 mm²**
	Total area provided	**27980 mm²**
	Volume of steel	**175993 cm³**
	Weight of steel	**1381.5 kg**
DISTRIBUTION REINFORCEMENT	**Characteristic strength**	**250 N/mm²**
SUMMARY	**Diameter of bars**	**50 mm**
IN X-DIRECTION:		
In top:	**Number of bars**	**14**
	Spacing of bars	**285 mm**
	Area required	**6816 mm²/m**
	Area provided	**6889.5 mm²/m**
	Volume of steel	**108581 cm³**
	Weight of steel	**852.36 kg**
IN Y-DIRECTION:		
In top:	**Number of bars**	**14**
	Spacing of bars	**285 mm**
	Area required	**6816 mm²/m**
	Area provided	**6889.5 mm²/m**
	Volume of steel	**108581 cm³**
	Weight of steel	**852.36 kg**
SIDE BARS SUMMARY	**Characteristic strength**	**250 N/mm²**
	Diameter of bars	**12 mm**
	Total number of bars	**44**
	Spacing of bars	**250 mm**
	Volume of steel	**21896 cm³**
	Weight of steel	**171.88 kg**
QUANTITIES	**Total concrete volume**	**47.74 m³**
	Total area of formwork	**46.576 m²**
	Total volume of steel	**631615 cm³**
	Total weight of steel	**4958.2 kg**
	Approx.self-weight of pilecap	**1604.1 kN**
	Approx.total load on each pile	**4435 kN**

Location: Cap for lightly-loaded column

Design to BS8110(1997) with partial safety factor for steel gammaS=1.15
Bottom layer of main steel is assumed to run in X-direction.

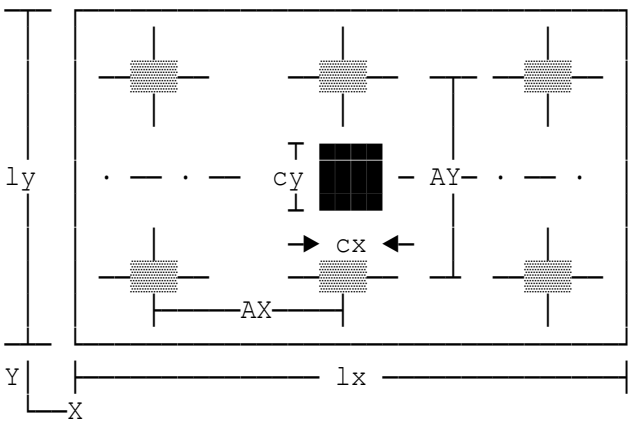

Pilecap for six piles

Designed by Bending Theory
Calculations are in
accordance with BS8110.

Main reinforcement is
arranged in bands parallel
to principal axes and is
symmetrical about pile
centres.
For bond calculations,
any high-yield bars are
assumed Type 2:deformed.

Total ultimate load on column	N=500 kN
Column dimension cx	cx=300 mm
Column dimension cy	cy=300 mm
Nominal pile diameter	PileD=250 mm
Spc.of pile ctrs in X-direction	AX=750 mm
Overhang: pile face to cap edge	olap=300 mm
Length of pilecap	lx=2350 mm
Spc.of pile ctrs in Y-direction	AY=750 mm
Breadth of pilecap	ly=2350 mm
Concrete grade	fcu=35 N/mm²
Steel strength	fy=500 N/mm²
Cover to underside of main bars	Cover=150 mm
Side and top cover to main bars	Scvr=75 mm
Chosen depth of pilecap	h=310 mm

Design of main steel in X-direction

Main steel diameter	diaX=12 mm
Main steel spacing	SpcX=145 mm

Design of main steel in Y-direction

Main steel diameter	diaY=12 mm
Main steel spacing	SpcY=225 mm

Distribution steel

Diameter of bar	LSize=12 mm
Spacing of bars	LSpac=280 mm

MAIN REINFORCEMENT	**Characteristic strength**	**500 N/mm²**
IN X-DIRECTION:	**Diameter of bars**	**12 mm**
SUMMARY	**Spacing**	**145 mm**
	Total number of bars	**16**
	Total area required	**1775 mm²**
	Total area provided	**1809.6 mm²**
	Volume of steel	**4165.6 cm³**
	Weight of steel	**32.7 kg**
MAIN REINFORCEMENT	**Characteristic strength**	**500 N/mm²**
IN Y-DIRECTION:	**Diameter of bars**	**12 mm**
SUMMARY	**Spacing**	**225 mm**
	Total number of bars	**10**
	Total area required	**1063.9 mm²**
	Total area provided	**1131 mm²**
	Volume of steel	**1617.3 cm³**
	Weight of steel	**12.696 kg**
DISTRIBUTION REINFORCEMENT	**Characteristic strength**	**500 N/mm²**
SUMMARY	**Diameter of bars**	**12 mm**
IN X-DIRECTION:		
In top:	**Number of bars**	**8**
	Spacing of bars	**280 mm**
	Area required	**403 mm²/m**
	Area provided	**403.92 mm²/m**
	Volume of steel	**1990.5 cm³**
	Weight of steel	**15.626 kg**
IN Y-DIRECTION:		
In top:	**Number of bars**	**8**
	Spacing of bars	**280 mm**
	Area required	**403 mm²/m**
	Area provided	**403.92 mm²/m**
	Volume of steel	**1990.5 cm³**
	Weight of steel	**15.626 kg**
SIDE BARS SUMMARY	**Characteristic strength**	**500 N/mm²**
	Diameter of bars	**12 mm**
	Total number of bars	**4**
	Spacing of bars	**250 mm**
	Volume of steel	**1207.9 cm³**
	Weight of steel	**9.4819 kg**
QUANTITIES	**Total concrete volume**	**1.712 m³**
	Total area of formwork	**2.914 m²**
	Total volume of steel	**10972 cm³**
	Total weight of steel	**86.129 kg**
	Approx.self-weight of pilecap	**57.522 kN**
	Approx.total load on each pile	**93 kN**

Location: Ex1 - Pilecap at G3

Bottom layer of main steel is assumed to run in X-direction.

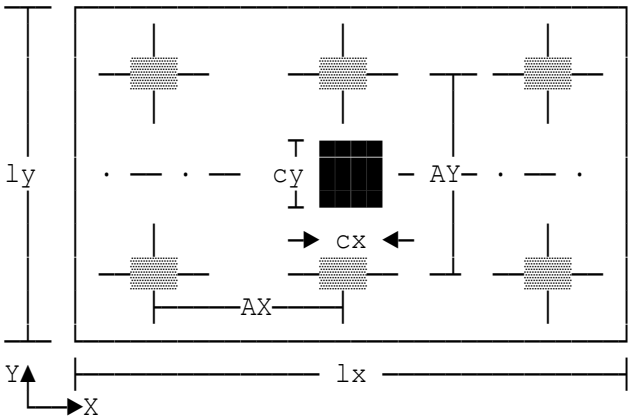

Pilecap for six piles

Designed using bending theory to EC2 Part 1-1.

Main reinforcement is arranged in bands // to the principal axes and symmetrical about pile centres.

Use ultimate values for load and moment.

Total design load on column	N=8400 kN
Column dimension cx	cx=500 mm
Column dimension cy	cy=500 mm
Nominal pile diameter	PileD=450 mm
Partial safety factor for steel	gams=1.15
Partial safety factor for conc.	gamc=1.5
Spacing of pile ctrs in X-dir	AX=1350 mm
Overhang: pile face to cap edge	olap=150 mm
Length of pilecap	lx=3450 mm
Spacing of pile ctrs in Y-dir	AY=1350 mm
Breadth of pilecap	ly=2100 mm
Char yield strength of reinft.	fyk=500 N/mm²
Cover to underside of main bars	Cover=150 mm
Side and top cover to main bars	Scvr=75 mm
Chosen depth of pilecap	h=1730 mm

Design of main steel in X-direction

Main steel diameter	diaX=12 mm
Main steel spacing	SpcX=40 mm

Design of main steel in Y-direction

Main steel diameter	diaY=20 mm
Main steel spacing	SpcY=115 mm

Distribution steel

Distribution steel diameter	LSize=20 mm
Spacing of bars	LSpac=120 mm
Area of dist. steel provided	A2=PI*LSize^2*250/LSpac=2618 mm²/m

Check shear resistance in X-direction

Shear force due to ultimate load	VEd=N/3+Mx'*1000/AX=2800 kN

Shear resistance VRdc=beta'*CRdc*ks*vRdc*bw*d/1000
=2939 kN
Modified shear resistance VRdc=VRdm=3155 kN

SHEAR SUMMARY	**Shear force**	**2800 kN**
	Shear resistance	**3155 kN**

Hence section is satisfactory, no shear reinforcement is required.

Check shear resistance in Y-direction

Shear force due to ultimate load VEd=N/2+My'*1000/AY=4200 kN
Shear resistance VRdc=beta'*CRdc*ks*vRdc*bw*d/1000
=5889 kN
Modified shear resistance VRdc=VRdm=6303 kN

SHEAR SUMMARY	**Shear force**	**4200 kN**
	Shear resistance	**6303 kN**

Hence section is satisfactory, no shear reinforcement is required.

Check punching shear at column face

Check punching shear at column face:
Eccentricity factor β beta=1
Shear stress at column perimeter vEd=beta*VEd*1000/(uo*d)=2.696 N/mm²
Maximum punching shear resistance vRdmax=0.5*v*fcd=4.973 N/mm²
Shear stress at column perimeter is within the maximum punching shear resistance, hence satisfactory.

MAIN REINFORCEMENT	**Characteristic strength**	**500 N/mm²**
IN X-DIRECTION:	**Diameter of bars**	**12 mm**
SUMMARY	**Spacing**	**40 mm**
	Total number of bars	**49**
	Total area required	**5450 mm²**
	Total area provided	**5542 mm²**
MAIN REINFORCEMENT	**Characteristic strength**	**500 N/mm²**
IN Y-DIRECTION:	**Diameter of bars**	**20 mm**
SUMMARY	**Spacing**	**115 mm**
	Total number of bars	**29**
	Total area required	**8953 mm²**
	Total area provided	**9111 mm²**
DISTRIBUTION REINFORCEMENT	**Characteristic strength**	**500 N/mm²**
SUMMARY	**Diameter of bars**	**20 mm**
IN X-DIRECTION:		
In top:	**Number of bars**	**17**
	Spacing of bars	**120 mm**
	Area required	**2595 mm²/m**
	Area provided	**2618 mm²/m**
IN Y-DIRECTION:		
In top:	**Number of bars**	**28**
	Spacing of bars	**120 mm**
	Area required	**2595 mm²/m**
	Area provided	**2618 mm²/m**

SIDE BARS SUMMARY	**Characteristic strength**	**500 N/mm²**
	Diameter of bars	**12 mm**
	Total number of bars	**28**
	Spacing of bars	**250 mm**
QUANTITIES	**Total concrete volume**	**12.53 m³**
	Total area of formwork	**19.2 m²**

Location: Ex2 - Cap for heavily-loaded column w. mild steel reinf.

Bottom layer of main steel is assumed to run in X-direction.

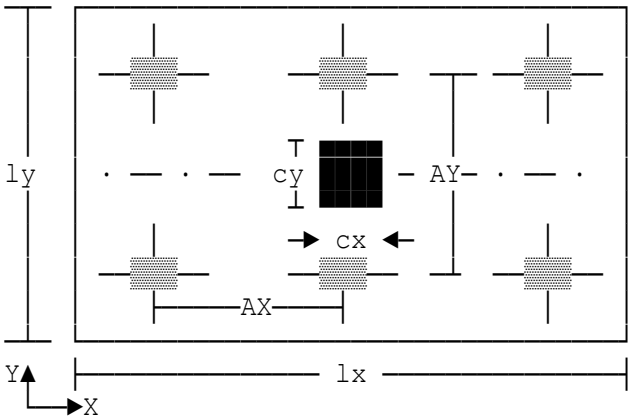

Pilecap for six piles

Designed using bending theory to EC2 Part 1-1.

Main reinforcement is arranged in bands // to the principal axes and symmetrical about pile centres.

Use ultimate values for load and moment.

Total design load on column	N=20000 kN
Column dimension cx	cx=500 mm
Column dimension cy	cy=500 mm
Nominal pile diameter	PileD=500 mm
Partial safety factor for steel	gams=1.15
Partial safety factor for conc.	gamc=1.5
Spacing of pile ctrs in X-dir	AX=1500 mm
Overhang: pile face to cap edge	olap=300 mm
Length of pilecap	lx=4100 mm
Spacing of pile ctrs in Y-dir	AY=1500 mm
Breadth of pilecap	ly=4100 mm
Char yield strength of reinft.	fyk=500 N/mm²
Cover to underside of main bars	Cover=150 mm
Side and top cover to main bars	Scvr=75 mm
Chosen depth of pilecap	h=2840 mm

Design of main steel in X-direction

Main steel diameter	diaX=40 mm
Main steel spacing	SpcX=300 mm

Design of main steel in Y-direction

Main steel diameter	diaY=40 mm
Main steel spacing	SpcY=300 mm

Distribution steel

Distribution steel diameter	LSize=25 mm
Spacing of bars	LSpac=115 mm
Area of dist. steel provided	A2=PI*LSize^2*250/LSpac=4268 mm²/m

Check shear resistance in X-direction

Shear force due to ultimate load	VEd=N/3+Mx'*1000/AX=6667 kN

Shear resistance VRdc=beta'*CRdc*ks*vRdc*bw*d/1000
=11049 kN
Modified shear resistance VRdc=VRdm=11657 kN

SHEAR SUMMARY	**Shear force**	**6667 kN**
	Shear resistance	**11657 kN**

Hence section is satisfactory, no shear reinforcement is required.

Check shear resistance in Y-direction

Shear force due to ultimate load VEd=N/2+My'*1000/AY=10000 kN
Shear resistance VRdc=beta'*CRdc*ks*vRdc*bw*d/1000
=10956 kN
Modified shear resistance VRdc=VRdm=11511 kN

SHEAR SUMMARY	**Shear force**	**10000 kN**
	Shear resistance	**11511 kN**

Hence section is satisfactory, no shear reinforcement is required.

Check punching shear at column face

Check punching shear at column face:
Eccentricity factor β beta=1
Shear stress at column perimeter vEd=beta*VEd*1000/(uo*d)=3.802 N/mm²
Maximum punching shear resistance vRdmax=0.5*v*fcd=4.973 N/mm²
Shear stress at column perimeter is within the maximum punching shear resistance, hence satisfactory.

MAIN REINFORCEMENT	**Characteristic strength**	**500 N/mm²**
IN X-DIRECTION:	**Diameter of bars**	**40 mm**
SUMMARY	**Spacing**	**300 mm**
	Total number of bars	**14**
	Total area required	**17466 mm²**
	Total area provided	**17593 mm²**
MAIN REINFORCEMENT	**Characteristic strength**	**500 N/mm²**
IN Y-DIRECTION:	**Diameter of bars**	**40 mm**
SUMMARY	**Spacing**	**300 mm**
	Total number of bars	**14**
	Total area required	**17466 mm²**
	Total area provided	**17593 mm²**
DISTRIBUTION REINFORCEMENT	**Characteristic strength**	**500 N/mm²**
SUMMARY	**Diameter of bars**	**25 mm**
IN X-DIRECTION:		
In top:	**Number of bars**	**35**
	Spacing of bars	**115 mm**
	Area required	**4260 mm²/m**
	Area provided	**4268 mm²/m**
IN Y-DIRECTION:		
In top:	**Number of bars**	**35**
	Spacing of bars	**115 mm**
	Area required	**4260 mm²/m**
	Area provided	**4268 mm²/m**

SIDE BARS SUMMARY	**Characteristic strength**	**500 N/mm²**
	Diameter of bars	**12 mm**
	Total number of bars	**44**
	Spacing of bars	**250 mm**
QUANTITIES	**Total concrete volume**	**47.74 m³**
	Total area of formwork	**46.58 m²**

Location: Ex3 - Cap for lightly-loaded column

Bottom layer of main steel is assumed to run in X-direction.

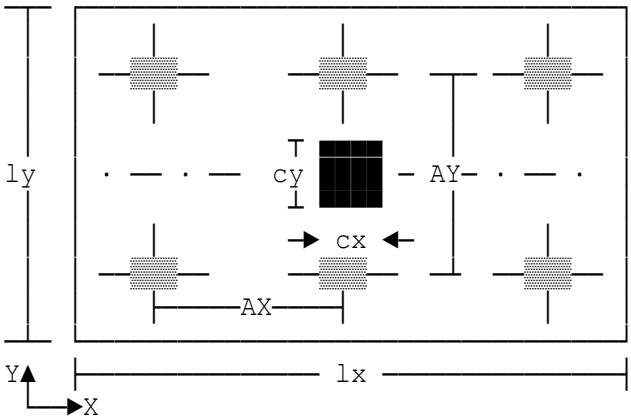

Pilecap for six piles

Designed using bending theory to EC2 Part 1-1.

Main reinforcement is arranged in bands // to the principal axes and symmetrical about pile centres.

Use ultimate values for load and moment.

Total design load on column	N=500 kN
Column dimension cx	cx=300 mm
Column dimension cy	cy=300 mm
Nominal pile diameter	PileD=250 mm
Partial safety factor for steel	gams=1.15
Partial safety factor for conc.	gamc=1.5
Spacing of pile ctrs in X-dir	AX=750 mm
Overhang: pile face to cap edge	olap=300 mm
Length of pilecap	lx=2350 mm
Spacing of pile ctrs in Y-dir	AY=750 mm
Breadth of pilecap	ly=2350 mm
Char yield strength of reinft.	fyk=500 N/mm²
Cover to underside of main bars	Cover=150 mm
Side and top cover to main bars	Scvr=75 mm
Chosen depth of pilecap	h=400 mm

Design of main steel in X-direction

Main steel diameter	diaX=12 mm
Main steel spacing	SpcX=180 mm

Design of main steel in Y-direction

Main steel diameter	diaY=12 mm
Main steel spacing	SpcY=180 mm

Distribution steel

Distribution steel diameter	LSize=12 mm
Spacing of bars	LSpac=185 mm
Area of dist. steel provided	A2=PI*LSize^2*250/LSpac=611.3 mm²/m

Check shear resistance in X-direction

Shear force due to ultimate load	VEd=N/3+Mx'*1000/AX=166.7 kN

Shear resistance VRdc=beta'*CRdc*ks*vRdc*bw*d/1000
=264.4 kN
Modified shear resistance VRdc=VRdm=298.6 kN

SHEAR SUMMARY	**Shear force**	**166.7 kN**
	Shear resistance	**298.6 kN**

Hence section is satisfactory, no shear reinforcement is required.

Check shear resistance in Y-direction

Shear force due to ultimate load VEd=N/2+My'*1000/AY=250 kN
Shear resistance VRdc=beta'*CRdc*ks*vRdc*bw*d/1000
=800.5 kN
Modified shear resistance VRdc=VRdm=894.2 kN

SHEAR SUMMARY	**Shear force**	**250 kN**
	Shear resistance	**894.2 kN**

Hence section is satisfactory, no shear reinforcement is required.

Check punching shear at column face

Check punching shear at column face:
Eccentricity factor β beta=1
Shear stress at column perimeter vEd=beta*VEd*1000/(uo*d)=1.796 N/mm²
Maximum punching shear resistance vRdmax=0.5*v*fcd=5.581 N/mm²
Shear stress at column perimeter is within the maximum punching shear resistance, hence satisfactory.

MAIN REINFORCEMENT	**Characteristic strength**	**500 N/mm²**
IN X-DIRECTION:	**Diameter of bars**	**12 mm**
SUMMARY	**Spacing**	**180 mm**
	Total number of bars	**13**
	Total area required	**1410 mm²**
	Total area provided	**1470 mm²**
MAIN REINFORCEMENT	**Characteristic strength**	**500 N/mm²**
IN Y-DIRECTION:	**Diameter of bars**	**12 mm**
SUMMARY	**Spacing**	**180 mm**
	Total number of bars	**13**
	Total area required	**1410 mm²**
	Total area provided	**1470 mm²**
DISTRIBUTION REINFORCEMENT	**Characteristic strength**	**500 N/mm²**
SUMMARY	**Diameter of bars**	**12 mm**
IN X-DIRECTION:		
In top:	**Number of bars**	**12**
	Spacing of bars	**185 mm**
	Area required	**600 mm²/m**
	Area provided	**611.3 mm²/m**
IN Y-DIRECTION:		
In top:	**Number of bars**	**12**
	Spacing of bars	**185 mm**
	Area required	**600 mm²/m**
	Area provided	**611.3 mm²/m**

SIDE BARS SUMMARY	**Characteristic strength**	**500 N/mm²**
	Diameter of bars	**12 mm**
	Total number of bars	**4**
	Spacing of bars	**250 mm**
QUANTITIES	**Total concrete volume**	**2.209 m³**
	Total area of formwork	**3.76 m²**

Location: Pilecap at G3

Design to BS8110(1997) with partial safety factor for steel gammaS=1.15
Bottom layer of main steel is assumed to run in X-direction.

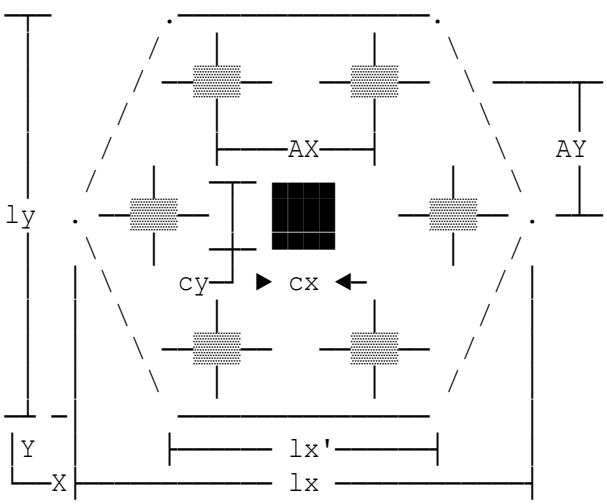

Pilecap for seven piles

Designed by Bending Theory.
7th pile located directly beneath column.
Calculations are in accordance with BS8110.
Main reinforcement is arranged in bands parallel to principal axes and is symmetrical about pile centres.
For bond calculations, any high-yield bars are assumed Type2:deformed.

Total ultimate load on column	N=9800 kN
Column dimension cx	cx=500 mm
Column dimension cy	cy=500 mm
Nominal pile diameter	PileD=450 mm
Spc.of pile ctrs in X-direction	AX=1350 mm
Overhang: pile face to cap edge	olap=150 mm
Spc.of pile ctrs in Y-direction	AY=1169 mm
Breadth of pilecap	ly=3088 mm
Maximum length of pilecap	lx=3566 mm
Minimum length of pilecap	lx'=1783 mm
Concrete grade	fcu=35 N/mm²
Steel strength	fy=500 N/mm²
Cover to underside of main bars	Cover=150 mm
Side and top cover to main bars	Scvr=75 mm
Chosen depth of pilecap	h=1500 mm

Design of main steel in X-direction

Main steel diameter	diaX=16 mm
Main steel spacing	SpcX=95 mm

Design of main steel in Y-direction

Main steel diameter	diaY=16 mm
Main steel spacing	SpcY=95 mm

Distribution steel

Diameter of bar	LSize=20 mm
Spacing of bars	LSpac=160 mm

MAIN REINFORCEMENT	**Characteristic strength**	**500 N/mm²**
IN X-DIRECTION:	**Diameter of bars**	**16 mm**
SUMMARY	**Spacing**	**95 mm**
	Total number of bars	**30**
	Total area required	**6021.6 mm²**
	Total area provided	**6031.9 mm²**
	Volume of steel	**24359 cm³**
	Weight of steel	**191.22 kg**
MAIN REINFORCEMENT	**Characteristic strength**	**500 N/mm²**
IN Y-DIRECTION:	**Diameter of bars**	**16 mm**
SUMMARY	**Spacing**	**95 mm**
	Total number of bars	**32**
	Total area required	**6390.7 mm²**
	Total area provided	**6434 mm²**
	Volume of steel	**26023 cm³**
	Weight of steel	**204.28 kg**
DISTRIBUTION REINFORCEMENT	**Characteristic strength**	**500 N/mm²**
SUMMARY	**Diameter of bars**	**20 mm**
IN X-DIRECTION:		
In top:	**Number of bars**	**18**
	Spacing of bars	**160 mm**
	Area required	**1950 mm²/m**
	Area provided	**1963.5 mm²/m**
	Volume of steel	**14599 cm³**
	Weight of steel	**114.6 kg**
IN Y-DIRECTION:		
In top:	**Number of bars**	**22**
	Spacing of bars	**160 mm**
	Area required	**1950 mm²/m**
	Area provided	**1963.5 mm²/m**
	Volume of steel	**15190 cm³**
	Weight of steel	**119.24 kg**
SIDE BARS SUMMARY	**Characteristic strength**	**500 N/mm²**
	Diameter of bars	**12 mm**
	Total number of bars	**36**
	Spacing of bars	**250 mm**
	Volume of steel	**9099.8 cm³**
	Weight of steel	**71.434 kg**
QUANTITIES	**Total concrete volume**	**12.388 m³**
	Total area of formwork	**16.046 m²**
	Total volume of steel	**89270 cm³**
	Total weight of steel	**700.77 kg**
	Approx.self-weight of pilecap	**416.25 kN**
	Approx.total load on each pile	**1460 kN**

Location: Cap for heavily-loaded column w. mild steel reinf.

Design to BS8110(1997) with partial safety factor for steel gammaS=1.15
Bottom layer of main steel is assumed to run in X-direction.

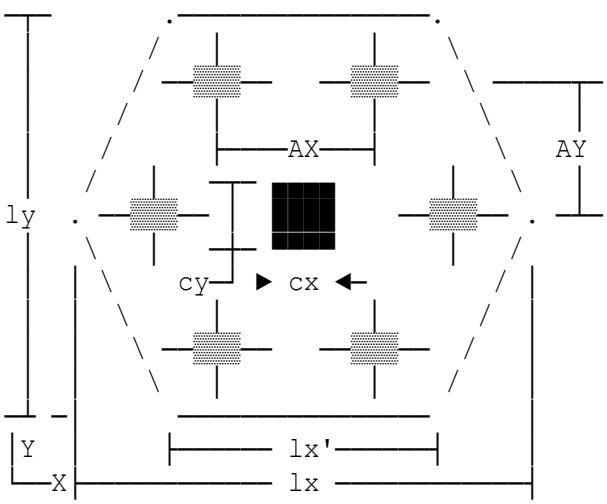

Pilecap for seven piles

Designed by Bending Theory.
7th pile located directly beneath column.
Calculations are in accordance with BS8110.
Main reinforcement is arranged in bands parallel to principal axes and is symmetrical about pile centres.
For bond calculations, any high-yield bars are assumed Type2:deformed.

Total ultimate load on column	N=40000 kN
Column dimension cx	cx=500 mm
Column dimension cy	cy=500 mm
Nominal pile diameter	PileD=450 mm
Spc.of pile ctrs in X-direction	AX=1350 mm
Overhang: pile face to cap edge	olap=150 mm
Spc.of pile ctrs in Y-direction	AY=1169 mm
Breadth of pilecap	ly=3088 mm
Maximum length of pilecap	lx=3566 mm
Minimum length of pilecap	lx'=1783 mm
Concrete grade	fcu=35 N/mm²
Steel strength	fy=250 N/mm²
Cover to underside of main bars	Cover=150 mm
Side and top cover to main bars	Scvr=75 mm
Chosen depth of pilecap	h=4420 mm

Design of main steel in X-direction

Main steel diameter	diaX=32 mm
Main steel spacing	SpcX=70 mm

Design of main steel in Y-direction

Main steel diameter	diaY=40 mm
Main steel spacing	SpcY=110 mm

Distribution steel

Diameter of bar	LSize=50 mm
Spacing of bars	LSpac=185 mm

MAIN REINFORCEMENT	**Characteristic strength**	**250 N/mm²**
IN X-DIRECTION:	**Diameter of bars**	**32 mm**
SUMMARY	**Spacing**	**70 mm**
	Total number of bars	**42**
	Total area required	**32758 mm²**
	Total area provided	**33778 mm²**
	Volume of steel	**322601 cm³**
	Weight of steel	**2532.4 kg**
MAIN REINFORCEMENT	**Characteristic strength**	**250 N/mm²**
IN Y-DIRECTION:	**Diameter of bars**	**40 mm**
SUMMARY	**Spacing**	**110 mm**
	Total number of bars	**28**
	Total area required	**34766 mm²**
	Total area provided	**35186 mm²**
	Volume of steel	**336289 cm³**
	Weight of steel	**2639.9 kg**
DISTRIBUTION REINFORCEMENT	**Characteristic strength**	**250 N/mm²**
SUMMARY	**Diameter of bars**	**50 mm**
IN X-DIRECTION:		
In top:	**Number of bars**	**16**
	Spacing of bars	**185 mm**
	Area required	**10608 mm²/m**
	Area provided	**10613 mm²/m**
	Volume of steel	**80386 cm³**
	Weight of steel	**631.03 kg**
IN Y-DIRECTION:		
In top:	**Number of bars**	**18**
	Spacing of bars	**185 mm**
	Area required	**10608 mm²/m**
	Area provided	**10613 mm²/m**
	Volume of steel	**81780 cm³**
	Weight of steel	**641.97 kg**
SIDE BARS SUMMARY	**Characteristic strength**	**250 N/mm²**
	Diameter of bars	**12 mm**
	Total number of bars	**102**
	Spacing of bars	**250 mm**
	Volume of steel	**25206 cm³**
	Weight of steel	**197.87 kg**
QUANTITIES	**Total concrete volume**	**36.504 m³**
	Total area of formwork	**47.283 m²**
	Total volume of steel	**846261 cm³**
	Total weight of steel	**6643.2 kg**
	Approx.self-weight of pilecap	**1226.5 kN**
	Approx.total load on each pile	**5890 kN**

Location: Cap for lightly-loaded column

Design to BS8110(1997) with partial safety factor for steel gammaS=1.15
Bottom layer of main steel is assumed to run in X-direction.

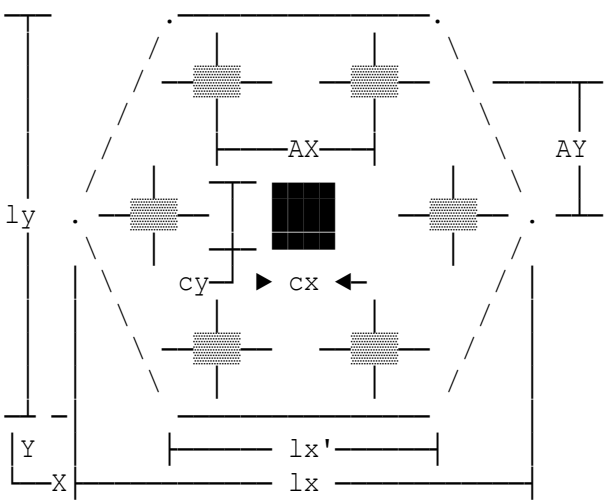

Pilecap for seven piles

Designed by Bending Theory.
7th pile located directly beneath column.
Calculations are in accordance with BS8110.
Main reinforcement is arranged in bands parallel to principal axes and is symmetrical about pile centres.
For bond calculations, any high-yield bars are assumed Type2:deformed.

Total ultimate load on column	N=500 kN
Column dimension cx	cx=300 mm
Column dimension cy	cy=300 mm
Nominal pile diameter	PileD=250 mm
Spc.of pile ctrs in X-direction	AX=750 mm
Overhang: pile face to cap edge	olap=150 mm
Spc.of pile ctrs in Y-direction	AY=650 mm
Breadth of pilecap	ly=1850 mm
Maximum length of pilecap	lx=2135 mm
Minimum length of pilecap	lx'=1067.6 mm
Concrete grade	fcu=35 N/mm²
Steel strength	fy=500 N/mm²
Cover to underside of main bars	Cover=150 mm
Side and top cover to main bars	Scvr=75 mm
Chosen depth of pilecap	h=300 mm

Design of main steel in X-direction

Main steel diameter	diaX=12 mm
Main steel spacing	SpcX=125 mm

Design of main steel in Y-direction

WARNING:
No bar arrangement is satisfactory. Increase the cap thickness, or possibly, the cap width, or the concrete and/or steel strengths.

Location: Ex1 -Pilecap at G3

Bottom layer of main steel is assumed to run in X-direction.

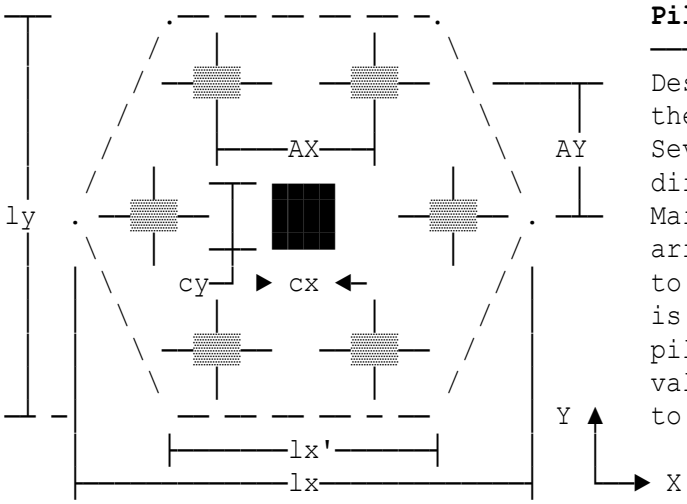

Pilecap for seven piles

Designed using bending theory to EC2 Part 1-1. Seventh pile is located directly beneath column. Main reinforcement is arranged in bands // to principal axes and is symmetrical about pile centres. Ultimate values for load & moment to be used.

Total design load on column	N=9800 kN
Column dimension cx	cx=500 mm
Column dimension cy	cy=500 mm
Nominal pile diameter	PileD=450 mm
Partial safety factor for steel	gams=1.15
Partial safety factor for conc.	gamc=1.5
Spacing of pile ctrs in X-dir	AX=1350 mm
Overhang: pile face to cap edge	olap=150 mm
Spacing of pile ctrs in Y-dir	AY=1169 mm
Breadth of pilecap	ly=3088 mm
Maximum length of pilecap	lx=3566 mm
Minimum length of pilecap	lx'=1783 mm
Char yield strength of reinft.	fyk=500 N/mm²
Cover to underside of main bars	Cover=150 mm
Side and top cover to main bars	Scvr=75 mm
Chosen depth of pilecap	h=1500 mm

Design of main steel in X-direction

Main steel diameter	diaX=16 mm
Main steel spacing	SpcX=80 mm

Design of main steel in Y-direction

Main steel diameter	diaY=20 mm
Main steel spacing	SpcY=125 mm

Distribution steel

Distribution steel diameter	LSize=25 mm
Spacing of bars	LSpac=215 mm
Area of dist steel provided	A2=PI*LSize^2*250/LSpac=2283 mm²/m

Check shear resistance in X-direction

Shear force due to ultimate load VEd=3*N/7+Mx'*1000/AX=4200 kN
Shear resistance VRdc=beta'*CRdc*ks*vRdc*bw*d/1000
=4680 kN
Modified shear resistance VRdc=VRdm=5010 kN

SHEAR SUMMARY	**Shear force**	**4200 kN**
	Shear resistance	**5010 kN**

Hence section is satisfactory, no shear reinforcement is required.
Shear force due to ultimate load VEd=N/7+Mx'*1000/AX=1400 kN
Shear resistance VRdc=beta'*CRdc*ks*vRdc*bw*d/1000
=3254 kN
Modified shear resistance VRdc=VRdm=3483 kN

SHEAR SUMMARY	**Shear force**	**1400 kN**
	Shear resistance	**3483 kN**

Hence section is satisfactory, no shear reinforcement is required.

Check shear resistance in Y-direction

Shear force due to ultimate load VEd=2*N/7+My'*1000/AY=2800 kN
Shear resistance VRdc=beta'*CRdc*ks*vRdc*bw*d/1000
=3336 kN

SHEAR SUMMARY	**Shear force**	**2800 kN**
	Shear resistance	**3336 kN**

Hence section is satisfactory, no shear reinforcement is required.

Check punching shear

Check punching shear at column face:
Eccentricity factor β beta=1
Shear stress at column perimeter vEd=beta*VEd*1000/(uo*d)=3.701 N/mm²
Maximum punching shear resistance vRdmax=0.5*v*fcd=4.973 N/mm²
Shear stress at column perimeter is within the maximum punching shear resistance, hence satisfactory.

MAIN REINFORCEMENT	**Characteristic strength**	**500 N/mm²**
IN X-DIRECTION:	**Diameter of bars**	**16 mm**
SUMMARY	**Spacing**	**80 mm**
	Total number of bars	**36**
	Total area required	**6948 mm²**
	Total area provided	**7238 mm²**

MAIN REINFORCEMENT	**Characteristic strength**	**500 N/mm²**
IN Y-DIRECTION:	**Diameter of bars**	**20 mm**
SUMMARY	**Spacing**	**125 mm**
	Total number of bars	**24**
	Total area required	**7374 mm²**
	Total area provided	**7540 mm²**

DISTRIBUTION REINFORCEMENT SUMMARY	**Characteristic strength**	**500 N/mm²**
	Diameter of bars	**25 mm**
IN X-DIRECTION:		
In top:	**Number of bars**	**14**
	Spacing of bars	**215 mm**
	Area required	**2250 mm²/m**
	Area provided	**2283 mm²/m**
IN Y-DIRECTION:		
In top:	**Number of bars**	**16**
	Spacing of bars	**215 mm**
	Area required	**2250 mm²/m**
	Area provided	**2283 mm²/m**
SIDE BARS SUMMARY	**Characteristic strength**	**500 N/mm²**
	Diameter of bars	**12 mm**
	Total number of bars	**36**
	Spacing of bars	**250 mm**
QUANTITIES	**Total concrete volume**	**12.39 m³**
	Total area of formwork	**16.05 m²**

Location: Ex2 - Cap for heavily-loaded column w. mild steel reinf.

Bottom layer of main steel is assumed to run in X-direction.

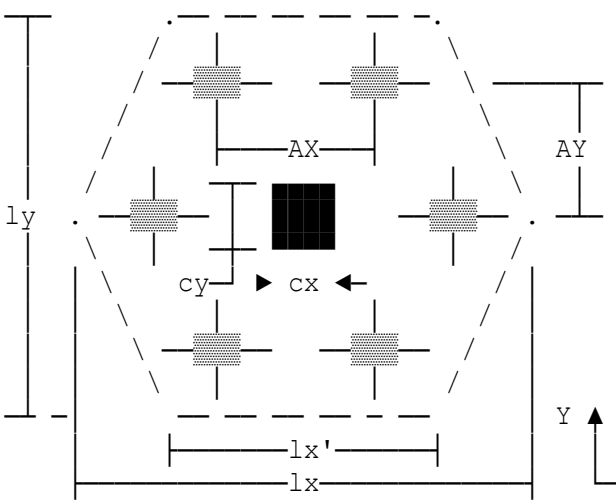

Pilecap for seven piles

Designed using bending theory to EC2 Part 1-1. Seventh pile is located directly beneath column. Main reinforcement is arranged in bands // to principal axes and is symmetrical about pile centres. Ultimate values for load & moment to be used.

Total design load on column	N=30000 kN
Column dimension cx	cx=500 mm
Column dimension cy	cy=500 mm
Nominal pile diameter	PileD=450 mm
Partial safety factor for steel	gams=1.15
Partial safety factor for conc.	gamc=1.5
Spacing of pile ctrs in X-dir	AX=1350 mm
Overhang: pile face to cap edge	olap=150 mm
Spacing of pile ctrs in Y-dir	AY=1169 mm
Breadth of pilecap	ly=3088 mm
Maximum length of pilecap	lx=3566 mm
Minimum length of pilecap	lx'=1783 mm
Char yield strength of reinft.	fyk=500 N/mm²
Cover to underside of main bars	Cover=150 mm
Side and top cover to main bars	Scvr=75 mm
Chosen depth of pilecap	h=4420 mm

Design of main steel in X-direction

Main steel diameter	diaX=32 mm
Main steel spacing	SpcX=110 mm

Design of main steel in Y-direction

Main steel diameter	diaY=32 mm
Main steel spacing	SpcY=110 mm

Distribution steel

Distribution steel diameter	LSize=50 mm
Spacing of bars	LSpac=295 mm
Area of dist steel provided	A2=PI*LSize^2*250/LSpac=6656 mm²/m

Check shear resistance in X-direction

Shear force due to ultimate load VEd=3*N/7+Mx'*1000/AX=12857 kN
Shear resistance VRdc=beta'*CRdc*ks*vRdc*bw*d/1000
=12627 kN
Modified shear resistance VRdc=VRdm=13062 kN

SHEAR SUMMARY	**Shear force**	**12857 kN**
	Shear resistance	**13062 kN**

Hence section is satisfactory, no shear reinforcement is required.
Shear force due to ultimate load VEd=N/7+Mx'*1000/AX=4286 kN
Shear resistance VRdc=beta'*CRdc*ks*vRdc*bw*d/1000
=12627 kN
Modified shear resistance VRdc=VRdm=13062 kN

SHEAR SUMMARY	**Shear force**	**4286 kN**
	Shear resistance	**13062 kN**

Hence section is satisfactory, no shear reinforcement is required.

Check shear resistance in Y-direction

Shear force due to ultimate load VEd=2*N/7+My'*1000/AY=8571 kN
Shear resistance VRdc=beta'*CRdc*ks*vRdc*bw*d/1000
=10808 kN

SHEAR SUMMARY	**Shear force**	**8571 kN**
	Shear resistance	**10808 kN**

Hence section is satisfactory, no shear reinforcement is required.

Check punching shear

Check punching shear at column face:
Eccentricity factor β beta=1
Shear stress at column perimeter vEd=beta*VEd*1000/(uo*d)=3.553 N/mm²
Maximum punching shear resistance vRdmax=0.5*v*fcd=4.973 N/mm²
Shear stress at column perimeter is within the maximum punching shear resistance, hence satisfactory.

MAIN REINFORCEMENT	**Characteristic strength**	**500 N/mm²**
IN X-DIRECTION:	**Diameter of bars**	**32 mm**
SUMMARY	**Spacing**	**110 mm**
	Total number of bars	**26**
	Total area required	**20473 mm²**
	Total area provided	**20910 mm²**

MAIN REINFORCEMENT	**Characteristic strength**	**500 N/mm²**
IN Y-DIRECTION:	**Diameter of bars**	**32 mm**
SUMMARY	**Spacing**	**110 mm**
	Total number of bars	**28**
	Total area required	**21729 mm²**
	Total area provided	**22519 mm²**

DISTRIBUTION REINFORCEMENT SUMMARY	**Characteristic strength**	**500 N/mm²**
	Diameter of bars	**50 mm**
IN X-DIRECTION:		
In top:	**Number of bars**	**10**
	Spacing of bars	**295 mm**
	Area required	**6630 mm²/m**
	Area provided	**6656 mm²/m**
IN Y-DIRECTION:		
In top:	**Number of bars**	**12**
	Spacing of bars	**295 mm**
	Area required	**6630 mm²/m**
	Area provided	**6656 mm²/m**
SIDE BARS SUMMARY	**Characteristic strength**	**500 N/mm²**
	Diameter of bars	**12 mm**
	Total number of bars	**102**
	Spacing of bars	**250 mm**
QUANTITIES	**Total concrete volume**	**36.5 m³**
	Total area of formwork	**47.28 m²**

Location: Ex3 - Cap for lightly-loaded column

Bottom layer of main steel is assumed to run in X-direction.

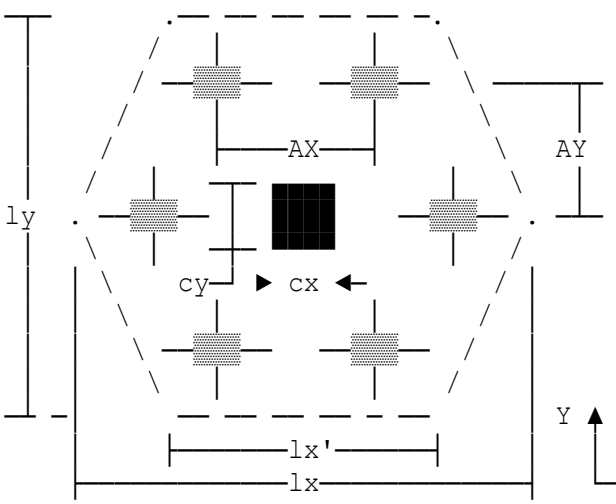

Pilecap for seven piles

Designed using bending theory to EC2 Part 1-1. Seventh pile is located directly beneath column. Main reinforcement is arranged in bands // to principal axes and is symmetrical about pile centres. Ultimate values for load & moment to be used.

Total design load on column	N=500 kN
Column dimension cx	cx=300 mm
Column dimension cy	cy=300 mm
Nominal pile diameter	PileD=250 mm
Partial safety factor for steel	gams=1.15
Partial safety factor for conc.	gamc=1.5
Spacing of pile ctrs in X-dir	AX=750 mm
Overhang: pile face to cap edge	olap=150 mm
Spacing of pile ctrs in Y-dir	AY=650 mm
Breadth of pilecap	ly=1850 mm
Maximum length of pilecap	lx=2135 mm
Minimum length of pilecap	lx'=1067.6 mm
Char yield strength of reinft.	fyk=500 N/mm²
Cover to underside of main bars	Cover=150 mm
Side and top cover to main bars	Scvr=75 mm
Chosen depth of pilecap	h=400 mm

Design of main steel in X-direction

Main steel diameter	diaX=12 mm
Main steel spacing	SpcX=165 mm

Design of main steel in Y-direction

Main steel diameter	diaY=12 mm
Main steel spacing	SpcY=160 mm

Distribution steel

Distribution steel diameter	LSize=12 mm
Spacing of bars	LSpac=185 mm
Area of dist steel provided	A2=PI*LSize^2*250/LSpac=611.3 mm²/m

Check shear resistance in X-direction

Shear force due to ultimate load VEd=3*N/7+Mx'*1000/AX=214.3 kN
Shear resistance VRdc=beta'*CRdc*ks*vRdc*bw*d/1000
=642.8 kN
Modified shear resistance VRdc=VRdm=715.3 kN

SHEAR SUMMARY	**Shear force**	**214.3 kN**
	Shear resistance	**715.3 kN**

Hence section is satisfactory, no shear reinforcement is required.
Shear force due to ultimate load VEd=N/7+Mx'*1000/AX=71.43 kN
Shear resistance VRdc=beta'*CRdc*ks*vRdc*bw*d/1000
=197.6 kN
Modified shear resistance VRdc=VRdm=219.9 kN

SHEAR SUMMARY	**Shear force**	**71.43 kN**
	Shear resistance	**219.9 kN**

Hence section is satisfactory, no shear reinforcement is required.

Check shear resistance in Y-direction

Shear force due to ultimate load VEd=2*N/7+My'*1000/AY=142.9 kN
Shear resistance VRdc=beta'*CRdc*ks*vRdc*bw*d/1000
=192.6 kN

SHEAR SUMMARY	**Shear force**	**142.9 kN**
	Shear resistance	**192.6 kN**

Hence section is satisfactory, no shear reinforcement is required.

Check punching shear

Check punching shear at column face:
Eccentricity factor β beta=1
Shear stress at column perimeter vEd=beta*VEd*1000/(uo*d)=1.796 N/mm²
Maximum punching shear resistance vRdmax=0.5*v*fcd=4.973 N/mm²
Shear stress at column perimeter is within the maximum punching shear resistance, hence satisfactory.

MAIN REINFORCEMENT	**Characteristic strength**	**500 N/mm²**
IN X-DIRECTION:	**Diameter of bars**	**12 mm**
SUMMARY	**Spacing**	**165 mm**
	Total number of bars	**10**
	Total area required	**1110 mm²**
	Total area provided	**1131 mm²**

MAIN REINFORCEMENT	**Characteristic strength**	**500 N/mm²**
IN Y-DIRECTION:	**Diameter of bars**	**12 mm**
SUMMARY	**Spacing**	**160 mm**
	Total number of bars	**12**
	Total area required	**1177 mm²**
	Total area provided	**1357 mm²**

DISTRIBUTION REINFORCEMENT SUMMARY	**Characteristic strength**	**500 N/mm²**
	Diameter of bars	**12 mm**
IN X-DIRECTION:		
In top:	**Number of bars**	**10**
	Spacing of bars	**185 mm**
	Area required	**600 mm²/m**
	Area provided	**611.3 mm²/m**
IN Y-DIRECTION:		
In top:	**Number of bars**	**10**
	Spacing of bars	**185 mm**
	Area required	**600 mm²/m**
	Area provided	**611.3 mm²/m**
SIDE BARS SUMMARY	**Characteristic strength**	**500 N/mm²**
	Diameter of bars	**12 mm**
	Total number of bars	**6**
	Spacing of bars	**250 mm**
QUANTITIES	**Total concrete volume**	**1.185 m³**
	Total area of formwork	**2.563 m²**

Location: Pilecap at G3

Design to BS8110(1997) with partial safety factor for steel gammaS=1.15
Bottom layer of main steel is assumed to run in X-direction.

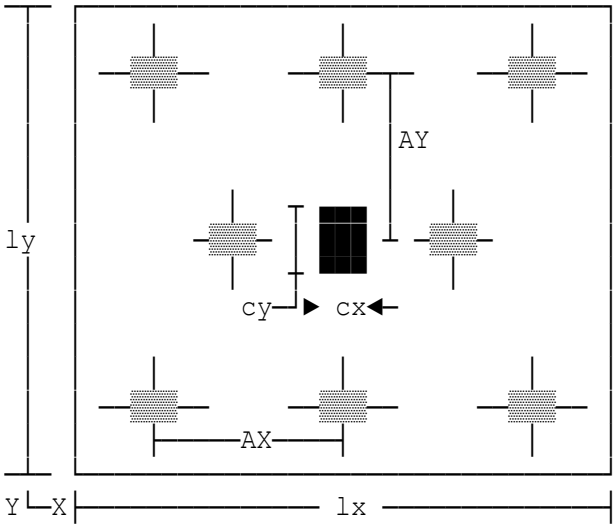

Pilecap for eight piles

Designed by Bending Theory. Calculations are in accordance with BS8110. Main reinforcement is arranged in bands parallel to principal axes and is symmetrical about pile centres.

For bond calculations, any high-yield bars are assumed Type 2:deformed.

Total ultimate load on column	N=11200 kN
Nominal pile diameter	PileD=450 mm
Column dimension cx	cx=500 mm
Column dimension cy	cy=500 mm
Spc.of pile ctrs in X-direction	AX=1350 mm
Overhang: pile face to cap edge	olap=150 mm
Length of pilecap	lx=3450 mm
Spc.of pile ctrs in Y-direction	AY=1169 mm
Breadth of pilecap	ly=3088 mm
Concrete grade	fcu=35 N/mm²
Steel strength	fy=500 N/mm²
Cover to underside of main bars	Cover=150 mm
Side and top cover to main bars	Scvr=75 mm
Chosen depth of pilecap	h=1500 mm

Design of main steel in X-direction

Main steel diameter	diaX=20 mm
Main steel spacing	SpcX=135 mm

Design of main steel in Y-direction

Main steel diameter	diaY=20 mm
Main steel spacing	SpcY=145 mm

Distribution steel

Diameter of bar	LSize=20 mm
Spacing of bars	LSpac=160 mm
Area of dist.steel provided	A2=PI*LSize^2*250/LSpac=1963.5 mm²/m

Check shear resistance in X-direction (Cl.3.11.4.4)

```
Total shear resistance provided   VProv=(VMod*CP1Xs+vc*CP2Xs)*EffDX
                                        /1E3=11006 kN
Total shear resistance required        =4200 kN
Shear resistance in X-direction is satisfactory.
Total shear resistance provided   VProv=(VMod*CP1Xs+vc*CP2Xs)*EffDX
                                        /1E3=3307.4 kN
Total shear resistance required        =2800 kN
Shear resistance in X-direction is satisfactory.
```

Check shear resistance in Y-direction - Clause 3.11.4.4

```
Total shear resistance provided   VProv=(VMod*CP1Ys+vc*CP2Ys)*EffDY
                                        /1E3=4354.9 kN
Total shear resistance required        =4200 kN
Shear resistance in Y-direction is satisfactory.
```

Check punching shear at column face - Clause 3.11.4.5

```
Punching-shear resistance prov.   VpR1=Vmax*2*(cx*EffDY+cy*EffDX)/1E3
                                     =12589 kN
Punching-shear resistance reqd.      =11200 kN
Punching-shear stress on column perimeter is satisfactory.
```

MAIN REINFORCEMENT	**Characteristic strength**	**500 N/mm²**
IN X-DIRECTION	**Diameter of bars**	**20 mm**
SUMMARY	**Spacing**	**135 mm**
	Total number of bars	**22**
	Total area required	**6689.8 mm²**
	Total area provided	**6911.5 mm²**
	Volume of steel	**33348 cm³**
	Weight of steel	**261.78 kg**
MAIN REINFORCEMENT	**Characteristic strength**	**500 N/mm²**
IN Y-DIRECTION	**Diameter of bars**	**20 mm**
SUMMARY	**Spacing**	**145 mm**
	Total number of bars	**23**
	Total area required	**7133.4 mm²**
	Total area provided	**7225.7 mm²**
	Volume of steel	**32537 cm³**
	Weight of steel	**255.42 kg**
DISTRIBUTION REINFORCEMENT	**Characteristic strength**	**500 N/mm²**
SUMMARY	**Diameter of bars**	**20 mm**
IN X-DIRECTION:		
In top:	**Number of bars**	**19**
	Spacing of bars	**160 mm**
	Area required	**1950 mm²/m**
	Area provided	**1963.5 mm²/m**
	Volume of steel	**19698 cm³**
	Weight of steel	**154.63 kg**

IN Y-DIRECTION:

In top:	**Number of bars**	**21**
	Spacing of bars	**160 mm**
	Area required	**1950 mm²/m**
	Area provided	**1963.5 mm²/m**
	Volume of steel	**19383 cm³**
	Weight of steel	**152.16 kg**
SIDE BARS SUMMARY	**Characteristic strength**	**500 N/mm²**
	Diameter of bars	**12 mm**
	Total number of bars	**24**
	Spacing of bars	**250 mm**
	Volume of steel	**9785.2 cm³**
	Weight of steel	**76.814 kg**
QUANTITIES	**Total concrete volume**	**15.98 m³**
	Total area of formwork	**19.614 m²**
	Total volume of steel	**114751 cm³**
	Total weight of steel	**900.8 kg**
	Approx.self-weight of pilecap	**536.94 kN**
	Approx.total load on each pile	**1468 kN**

Location: Cap for heavily-loaded column w. mild steel reinforcement

Design to BS8110(1997) with partial safety factor for steel gammaS=1.15
Bottom layer of main steel is assumed to run in X-direction.

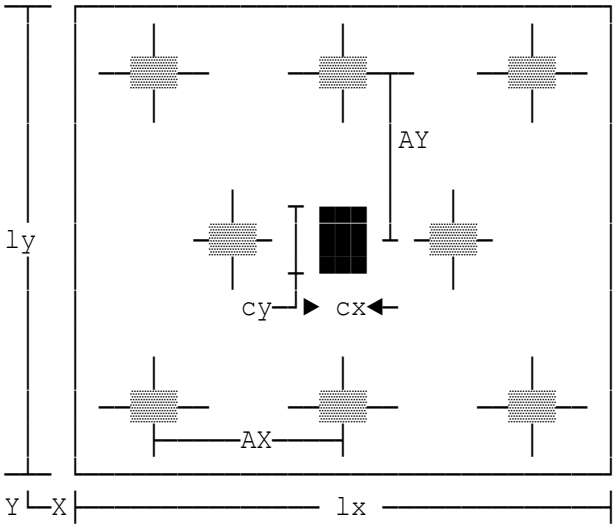

Pilecap for eight piles

Designed by Bending Theory. Calculations are in accordance with BS8110. Main reinforcement is arranged in bands parallel to principal axes and is symmetrical about pile centres.

For bond calculations, any high-yield bars are assumed Type 2:deformed.

Total ultimate load on column	N=50000 kN
Nominal pile diameter	PileD=450 mm
Column dimension cx	cx=550 mm
Column dimension cy	cy=550 mm
Spc.of pile ctrs in X-direction	AX=1350 mm
Overhang: pile face to cap edge	olap=475 mm
Length of pilecap	lx=4100 mm
Spc.of pile ctrs in Y-direction	AY=1169 mm
Breadth of pilecap	ly=4100 mm
Concrete grade	fcu=35 N/mm²
Steel strength	fy=250 N/mm²
Cover to underside of main bars	Cover=150 mm
Side and top cover to main bars	Scvr=75 mm
Chosen depth of pilecap	h=5000 mm

Design of main steel in X-direction

Main steel diameter	diaX=40 mm
Main steel spacing	SpcX=100 mm

Design of main steel in Y-direction

Main steel diameter	diaY=40 mm
Main steel spacing	SpcY=100 mm

Distribution steel

Diameter of bar	LSize=50 mm
Spacing of bars	LSpac=160 mm
Area of dist.steel provided	A2=PI*LSize^2*250/LSpac=12272 mm²/m

Check shear resistance in X-direction (Cl.3.11.4.4)

```
Total shear resistance provided   VProv=(VMod*CP1Xs+vc*CP2Xs)*EffDX
                                        /1E3=93725 kN
Total shear resistance required        =18750 kN
Shear resistance in X-direction is satisfactory.
Total shear resistance provided   VProv=(VMod*CP1Xs+vc*CP2Xs)*EffDX
                                        /1E3=61037 kN
Total shear resistance required        =12500 kN
Shear resistance in X-direction is satisfactory.
```

Check shear resistance in Y-direction - Clause 3.11.4.4

```
Total shear resistance provided   VProv=(VMod*CP1Ys+vc*CP2Ys)*EffDY
                                        /1E3=74552 kN
Total shear resistance required        =18750 kN
Shear resistance in Y-direction is satisfactory.
```

Check punching shear at column face - Clause 3.11.4.5

```
Punching-shear resistance prov.   VpR1=Vmax*2*(cx*EffDY+cy*EffDX)/1E3
                                     =50083 kN
Punching-shear resistance reqd.      =50000 kN
Punching-shear stress on column perimeter is satisfactory.
```

MAIN REINFORCEMENT	**Characteristic strength**	**250 N/mm²**
IN X-DIRECTION	**Diameter of bars**	**40 mm**
SUMMARY	**Spacing**	**100 mm**
	Total number of bars	**40**
	Total area required	**49200 mm²**
	Total area provided	**50265 mm²**
	Volume of steel	**578556 cm³**
	Weight of steel	**4541.7 kg**
MAIN REINFORCEMENT	**Characteristic strength**	**250 N/mm²**
IN Y-DIRECTION	**Diameter of bars**	**40 mm**
SUMMARY	**Spacing**	**100 mm**
	Total number of bars	**40**
	Total area required	**49200 mm²**
	Total area provided	**50265 mm²**
	Volume of steel	**569508 cm³**
	Weight of steel	**4470.6 kg**
DISTRIBUTION REINFORCEMENT	**Characteristic strength**	**250 N/mm²**
SUMMARY	**Diameter of bars**	**50 mm**
IN X-DIRECTION:		
In top:	**Number of bars**	**25**
	Spacing of bars	**160 mm**
	Area required	**12000 mm²/m**
	Area provided	**12272 mm²/m**
	Volume of steel	**193895 cm³**
	Weight of steel	**1522.1 kg**

IN Y-DIRECTION:

In top:	**Number of bars**	**25**
	Spacing of bars	**160 mm**
	Area required	**12000 mm²/m**
	Area provided	**12272 mm²/m**
	Volume of steel	**193895 cm³**
	Weight of steel	**1522.1 kg**
SIDE BARS SUMMARY	**Characteristic strength**	**250 N/mm²**
	Diameter of bars	**12 mm**
	Total number of bars	**80**
	Spacing of bars	**250 mm**
	Volume of steel	**40082 cm³**
	Weight of steel	**314.64 kg**
QUANTITIES	**Total concrete volume**	**84.05 m³**
	Total area of formwork	**82 m²**
	Total volume of steel	**1.5759E6 cm³**
	Total weight of steel	**12371 kg**
	Approx.self-weight of pilecap	**2824.1 kN**
	Approx.total load on each pile	**6604 kN**

Location: Cap for lightly-loaded column

Design to BS8110(1997) with partial safety factor for steel gammaS=1.15
Bottom layer of main steel is assumed to run in X-direction.

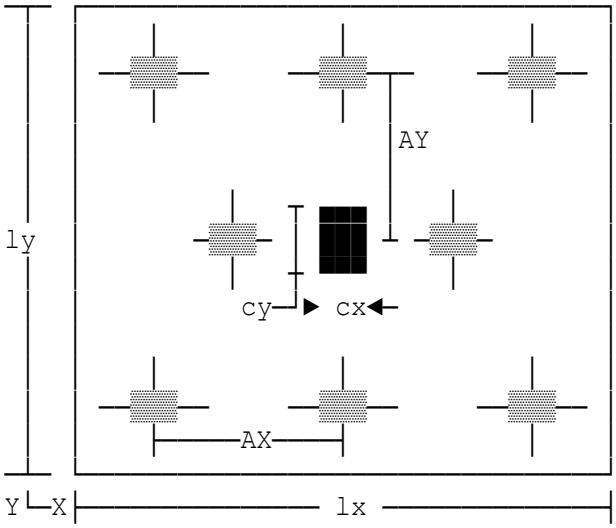

Pilecap for eight piles

Designed by Bending Theory. Calculations are in accordance with BS8110. Main reinforcement is arranged in bands parallel to principal axes and is symmetrical about pile centres.

For bond calculations, any high-yield bars are assumed Type 2:deformed.

Total ultimate load on column	N=500 kN
Nominal pile diameter	PileD=250 mm
Column dimension cx	cx=300 mm
Column dimension cy	cy=300 mm
Spc.of pile ctrs in X-direction	AX=750 mm
Overhang: pile face to cap edge	olap=300 mm
Length of pilecap	lx=2350 mm
Spc.of pile ctrs in Y-direction	AY=650 mm
Breadth of pilecap	ly=2350 mm
Concrete grade	fcu=35 N/mm²
Steel strength	fy=500 N/mm²
Cover to underside of main bars	Cover=150 mm
Side and top cover to main bars	Scvr=75 mm
Chosen depth of pilecap	h=340 mm

Design of main steel in X-direction

Main steel diameter	diaX=12 mm
Main steel spacing	SpcX=195 mm

Design of main steel in Y-direction

Main steel diameter	diaY=12 mm
Main steel spacing	SpcY=180 mm

Distribution steel

Diameter of bar	LSize=12 mm
Spacing of bars	LSpac=255 mm
Area of dist.steel provided	A2=PI*LSize^2*250/LSpac=443.52 mm²/m

Check shear resistance in X-direction (Cl.3.11.4.4)

```
Total shear resistance provided   VProv=(VMod*CP1Xs+vc*CP2Xs)*EffDX
                                        /1E3=572.11 kN
Total shear resistance required        =187.5 kN
Shear resistance in X-direction is satisfactory.
Total shear resistance provided   VProv=(VMod*CP1Xs+vc*CP2Xs)*EffDX
                                        /1E3=252.27 kN
Total shear resistance required        =125 kN
Shear resistance in X-direction is satisfactory.
```

Check shear resistance in Y-direction - Clause 3.11.4.4

```
Total shear resistance provided   VProv=(VMod*CP1Ys+vc*CP2Ys)*EffDY
                                        /1E3=251.92 kN
Total shear resistance required        =187.5 kN
Shear resistance in Y-direction is satisfactory.
```

Check punching shear at column face - Clause 3.11.4.5

```
Punching-shear resistance prov.   VpR1=Vmax*2*(cx*EffDY+cy*EffDX)/1E3
                                     =1010.9 kN
Punching-shear resistance reqd.      =500 kN
Punching-shear stress on column perimeter is satisfactory.
```

Check punching shear at critical planes - Clause 3.11.4.5

```
At Critical Perimeter 1:
Punching-shear resistance prov.   582.95 kN
Punching-shear resistance reqd.   500 kN
Punching shear at Critical Perimeter 1 is satisfactory.
At Critical Perimeter 2:
Punching-shear resistance prov.   536.34 kN
Punching-shear resistance reqd.   375 kN
Punching shear at Critical Perimeter 2 is satisfactory.
```

MAIN REINFORCEMENT IN X-DIRECTION SUMMARY	**Characteristic strength**	**500 N/mm²**
	Diameter of bars	**12 mm**
	Spacing	**195 mm**
	Total number of bars	**12**
	Total area required	**1268.4 mm²**
	Total area provided	**1357.2 mm²**
	Volume of steel	**2958.6 cm³**
	Weight of steel	**23.225 kg**
MAIN REINFORCEMENT IN Y-DIRECTION SUMMARY	**Characteristic strength**	**500 N/mm²**
	Diameter of bars	**12 mm**
	Spacing	**180 mm**
	Total number of bars	**13**
	Total area required	**1442 mm²**
	Total area provided	**1470.3 mm²**
	Volume of steel	**2969.9 cm³**
	Weight of steel	**23.314 kg**

DISTRIBUTION REINFORCEMENT SUMMARY	**Characteristic strength**	**500 N/mm²**
	Diameter of bars	**12 mm**
IN X-DIRECTION:		
In top:	**Number of bars**	**9**
	Spacing of bars	**255 mm**
	Area required	**442 mm²/m**
	Area provided	**443.52 mm²/m**
	Volume of steel	**2239.3 cm³**
	Weight of steel	**17.579 kg**
IN Y-DIRECTION:		
In top:	**Number of bars**	**9**
	Spacing of bars	**255 mm**
	Area required	**442 mm²/m**
	Area provided	**443.52 mm²/m**
	Volume of steel	**2239.3 cm³**
	Weight of steel	**17.579 kg**
SIDE BARS SUMMARY	**Characteristic strength**	**500 N/mm²**
	Diameter of bars	**12 mm**
	Total number of bars	**4**
	Spacing of bars	**250 mm**
	Volume of steel	**1207.9 cm³**
	Weight of steel	**9.4819 kg**
QUANTITIES	**Total concrete volume**	**1.8777 m³**
	Total area of formwork	**3.196 m²**
	Total volume of steel	**11615 cm³**
	Total weight of steel	**91.179 kg**
	Approx.self-weight of pilecap	**63.089 kN**
	Approx.total load on each pile	**71 kN**

Location: Ex1 - Pilecap at G3

Bottom layer of main steel is assumed to run in X-direction.

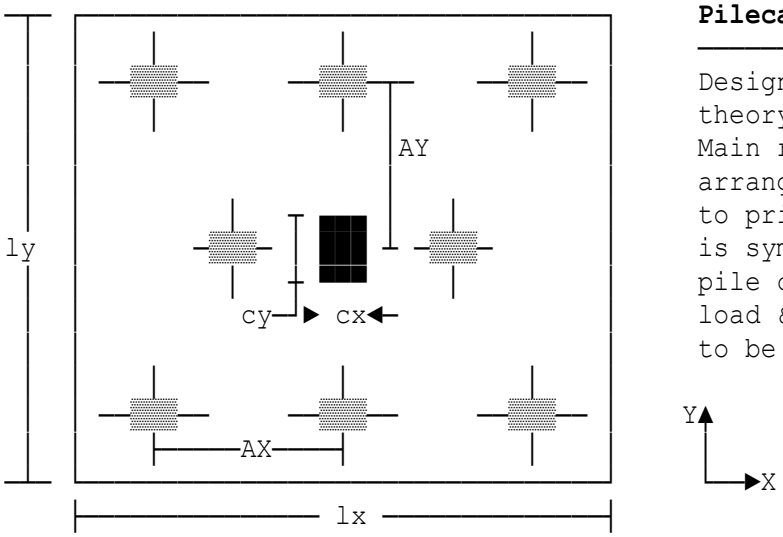

Pilecap for eight piles

Designed using bending theory to EC2 Part 1-1. Main reinforcement is arranged in bands // to principal axes and is symmetrical about pile centres. Ultimate load & moment values to be used.

Total design load on column	N=11200 kN
Nominal pile diameter	PileD=450 mm
Column dimension cx	cx=500 mm
Column dimension cy	cy=500 mm
Partial safety factor for steel	gams=1.15
Partial safety factor for conc.	gamc=1.5
Spacing of pile ctrs in X-dir	AX=1350 mm
Overhang: pile face to cap edge	olap=150 mm
Length of pilecap	lx=3450 mm
Spacing of pile ctrs in Y-dir	AY=1169 mm
Breadth of pilecap	ly=3088 mm
Char yield strength of reinft.	fyk=500 N/mm²
Cover to underside of main bars	Cover=150 mm
Side and top cover to main bars	Scvr=75 mm
Chosen depth of pilecap	h=1500 mm

Design of main steel in X-direction

Main steel diameter	diaX=16 mm
Main steel spacing	SpcX=85 mm

Design of main steel in Y-direction

Main steel diameter	diaY=16 mm
Main steel spacing	SpcY=85 mm

Distribution steel

Distribution steel diameter	LSize=25 mm
Spacing of bars	LSpac=215 mm
Area of dist. steel provided	A2=PI*LSize^2*250/LSpac=2283 mm²/m

Check shear resistance in X-direction

At Critical Plane 1:
Shear force due to ultimate load VEd=3*N/8+Mx'*1000/AX=4200 kN
Shear resistance VRdc=beta'*CRdc*ks*vRdc*bw*d/1000
=4847 kN
Modified shear resistance VRdc=VRdm=5355 kN

SHEAR SUMMARY	**Shear force**	**4200 kN**
	Shear resistance	**5355 kN**

Hence section is satisfactory, no shear reinforcement is required.

At Critical Plane 2:
Shear force due to ultimate load VEd=N/4+Mx'*1000/AX=2800 kN
Shear resistance VRdc=beta'*CRdc*ks*vRdc*bw*d/1000
=3370 kN
Modified shear resistance VRdc=VRdm=3724 kN

SHEAR SUMMARY	**Shear force**	**2800 kN**
	Shear resistance	**3724 kN**

Hence section is satisfactory, no shear reinforcement is required.

Check shear resistance in Y-direction

Shear force due to ultimate load VEd=3*N/8+My'*1000/AY=4200 kN
Shear resistance VRdc=beta'*CRdc*ks*vRdc*bw*d/1000
=4547 kN
Modified shear resistance VRdc=VRdm=5012 kN

SHEAR SUMMARY	**Shear force**	**4200 kN**
	Shear resistance	**5012 kN**

Hence section is satisfactory, no shear reinforcement is required.

Check punching shear at column face

Check punching shear at column face:
Eccentricity factor β beta=1
Shear stress at column perimeter vEd=beta*VEd*1000/(uo*d)=4.223 N/mm²
Maximum punching shear resistance vRdmax=0.5*v*fcd=5.581 N/mm²
Shear stress at column perimeter is within the maximum punching shear resistance, hence satisfactory.

MAIN REINFORCEMENT	**Characteristic strength**	**500 N/mm²**
IN X-DIRECTION	**Diameter of bars**	**16 mm**
SUMMARY	**Spacing**	**85 mm**
	Total number of bars	**35**
	Total area required	**6948 mm²**
	Total area provided	**7037 mm²**

MAIN REINFORCEMENT	**Characteristic strength**	**500 N/mm²**
IN Y-DIRECTION	**Diameter of bars**	**16 mm**
SUMMARY	**Spacing**	**85 mm**
	Total number of bars	**39**
	Total area required	**7763 mm²**
	Total area provided	**7841 mm²**
DISTRIBUTION REINFORCEMENT	**Characteristic strength**	**500 N/mm²**
SUMMARY	**Diameter of bars**	**25 mm**
IN X-DIRECTION:		
In top:	**Number of bars**	**14**
	Spacing of bars	**215 mm**
	Area required	**2250 mm²/m**
	Area provided	**2283 mm²/m**
IN Y-DIRECTION:		
In top:	**Number of bars**	**16**
	Spacing of bars	**215 mm**
	Area required	**2250 mm²/m**
	Area provided	**2283 mm²/m**
SIDE BARS SUMMARY	**Characteristic strength**	**500 N/mm²**
	Diameter of bars	**12 mm**
	Total number of bars	**24**
	Spacing of bars	**250 mm**
QUANTITIES	**Total concrete volume**	**15.98 m³**
	Total area of formwork	**19.61 m²**

Location: Ex2 - Cap for heavily-loaded column w. mild steel reinf.

Bottom layer of main steel is assumed to run in X-direction.

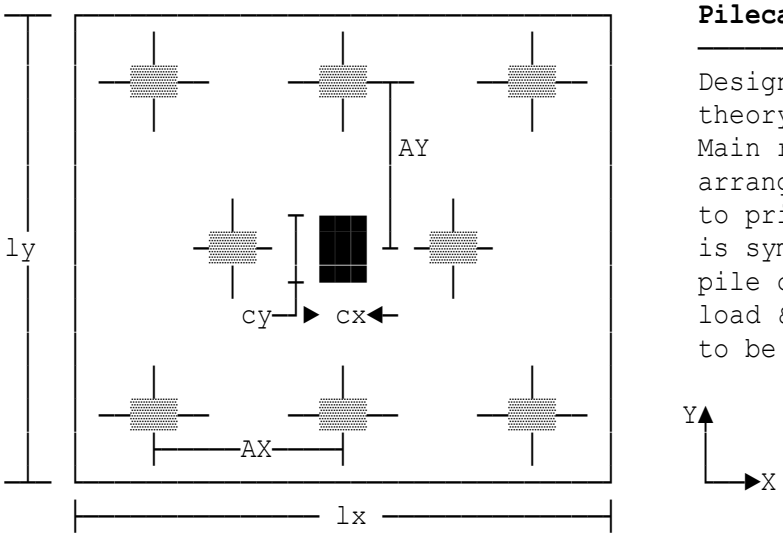

Pilecap for eight piles

Designed using bending theory to EC2 Part 1-1. Main reinforcement is arranged in bands // to principal axes and is symmetrical about pile centres. Ultimate load & moment values to be used.

Total design load on column	N=40000 kN
Nominal pile diameter	PileD=450 mm
Column dimension cx	cx=550 mm
Column dimension cy	cy=550 mm
Partial safety factor for steel	gams=1.15
Partial safety factor for conc.	gamc=1.5
Spacing of pile ctrs in X-dir	AX=1350 mm
Overhang: pile face to cap edge	olap=475 mm
Length of pilecap	lx=4100 mm
Spacing of pile ctrs in Y-dir	AY=1169 mm
Breadth of pilecap	ly=4100 mm
Char yield strength of reinft.	fyk=500 N/mm²
Cover to underside of main bars	Cover=150 mm
Side and top cover to main bars	Scvr=75 mm
Chosen depth of pilecap	h=5000 mm

Design of main steel in X-direction

Main steel diameter	diaX=40 mm
Main steel spacing	SpcX=160 mm

Design of main steel in Y-direction

Main steel diameter	diaY=40 mm
Main steel spacing	SpcY=160 mm

Distribution steel

Distribution steel diameter	LSize=50 mm
Spacing of bars	LSpac=260 mm
Area of dist. steel provided	A2=PI*LSize^2*250/LSpac=7552 mm²/m

Check shear resistance in X-direction

At Critical Plane 1:
Shear force due to ultimate load VEd=3*N/8+Mx'*1000/AX=15000 kN
Shear resistance VRdc=beta'*CRdc*ks*vRdc*bw*d/1000
=18805 kN
Modified shear resistance VRdc=VRdm=19369 kN

SHEAR SUMMARY	**Shear force**	**15000 kN**
	Shear resistance	**19369 kN**

Hence section is satisfactory, no shear reinforcement is required.

At Critical Plane 2:
Shear force due to ultimate load VEd=N/4+Mx'*1000/AX=10000 kN
Shear resistance VRdc=beta'*CRdc*ks*vRdc*bw*d/1000
=18805 kN
Modified shear resistance VRdc=VRdm=19369 kN

SHEAR SUMMARY	**Shear force**	**10000 kN**
	Shear resistance	**19369 kN**

Hence section is satisfactory, no shear reinforcement is required.

Check shear resistance in Y-direction

Shear force due to ultimate load VEd=3*N/8+My'*1000/AY=15000 kN
Shear resistance VRdc=beta'*CRdc*ks*vRdc*bw*d/1000
=18714 kN
Modified shear resistance VRdc=VRdm=19229 kN

SHEAR SUMMARY	**Shear force**	**15000 kN**
	Shear resistance	**19229 kN**

Hence section is satisfactory, no shear reinforcement is required.

Check punching shear at column face

Check punching shear at column face:
Eccentricity factor β beta=1
Shear stress at column perimeter vEd=beta*VEd*1000/(uo*d)=3.796 N/mm²
Maximum punching shear resistance vRdmax=0.5*v*fcd=4.973 N/mm²
Shear stress at column perimeter is within the maximum punching shear resistance, hence satisfactory.

MAIN REINFORCEMENT	**Characteristic strength**	**500 N/mm²**
IN X-DIRECTION	**Diameter of bars**	**40 mm**
SUMMARY	**Spacing**	**160 mm**
	Total number of bars	**25**
	Total area required	**30750 mm²**
	Total area provided	**31416 mm²**

MAIN REINFORCEMENT	**Characteristic strength**	**500 N/mm²**
IN Y-DIRECTION	**Diameter of bars**	**40 mm**
SUMMARY	**Spacing**	**160 mm**
	Total number of bars	**25**
	Total area required	**30750 mm²**
	Total area provided	**31416 mm²**
DISTRIBUTION REINFORCEMENT	**Characteristic strength**	**500 N/mm²**
SUMMARY	**Diameter of bars**	**50 mm**
IN X-DIRECTION:		
In top:	**Number of bars**	**16**
	Spacing of bars	**260 mm**
	Area required	**7500 mm²/m**
	Area provided	**7552 mm²/m**
IN Y-DIRECTION:		
In top:	**Number of bars**	**16**
	Spacing of bars	**260 mm**
	Area required	**7500 mm²/m**
	Area provided	**7552 mm²/m**
SIDE BARS SUMMARY	**Characteristic strength**	**500 N/mm²**
	Diameter of bars	**12 mm**
	Total number of bars	**80**
	Spacing of bars	**250 mm**
QUANTITIES	**Total concrete volume**	**84.05 m³**
	Total area of formwork	**82 m²**

Location: Ex3 - Cap for lightly-loaded column

Bottom layer of main steel is assumed to run in X-direction.

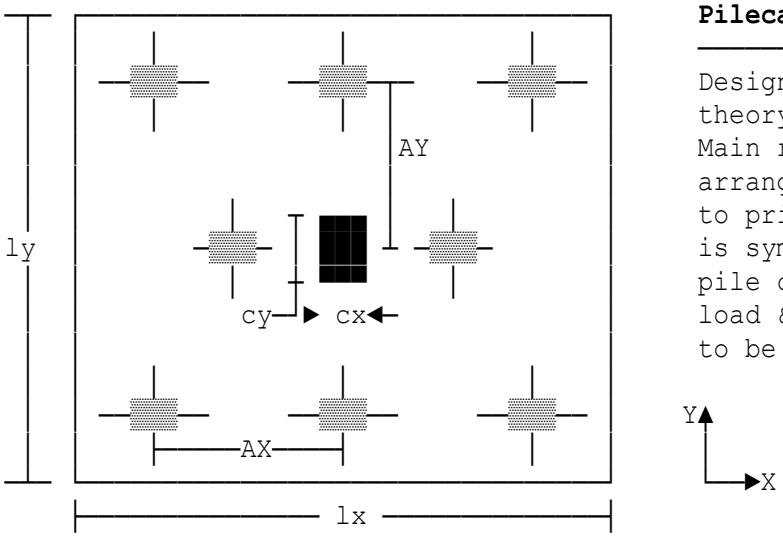

Pilecap for eight piles

Designed using bending theory to EC2 Part 1-1. Main reinforcement is arranged in bands // to principal axes and is symmetrical about pile centres. Ultimate load & moment values to be used.

Total design load on column	N=500 kN
Nominal pile diameter	PileD=250 mm
Column dimension cx	cx=300 mm
Column dimension cy	cy=300 mm
Partial safety factor for steel	gams=1.15
Partial safety factor for conc.	gamc=1.5
Spacing of pile ctrs in X-dir	AX=750 mm
Overhang: pile face to cap edge	olap=300 mm
Length of pilecap	lx=2350 mm
Spacing of pile ctrs in Y-dir	AY=650 mm
Breadth of pilecap	ly=2350 mm
Char yield strength of reinft.	fyk=500 N/mm²
Cover to underside of main bars	Cover=150 mm
Side and top cover to main bars	Scvr=75 mm
Chosen depth of pilecap	h=400 mm

Design of main steel in X-direction

Main steel diameter	diaX=12 mm
Main steel spacing	SpcX=180 mm

Design of main steel in Y-direction

Main steel diameter	diaY=12 mm
Main steel spacing	SpcY=180 mm

Distribution steel

Distribution steel diameter	LSize=12 mm
Spacing of bars	LSpac=185 mm
Area of dist. steel provided	A2=PI*LSize^2*250/LSpac=611.3 mm²/m

Check shear resistance in X-direction

At Critical Plane 1:
Shear force due to ultimate load VEd=3*N/8+Mx'*1000/AX=187.5 kN
Shear resistance VRdc=beta'*CRdc*ks*vRdc*bw*d/1000
=751.2 kN
Modified shear resistance VRdc=VRdm=792.7 kN

SHEAR SUMMARY Shear force 187.5 kN
Shear resistance 792.7 kN

Hence section is satisfactory, no shear reinforcement is required.

At Critical Plane 2:
Shear force due to ultimate load VEd=N/4+Mx'*1000/AX=125 kN
Shear resistance VRdc=beta'*CRdc*ks*vRdc*bw*d/1000
=230.9 kN
Modified shear resistance VRdc=VRdm=243.6 kN

SHEAR SUMMARY Shear force 125 kN
Shear resistance 243.6 kN

Hence section is satisfactory, no shear reinforcement is required.

Check shear resistance in Y-direction

Shear force due to ultimate load VEd=3*N/8+My'*1000/AY=187.5 kN
Shear resistance VRdc=beta'*CRdc*ks*vRdc*bw*d/1000
=262.5 kN
Modified shear resistance VRdc=VRdm=282.7 kN

SHEAR SUMMARY Shear force 187.5 kN
Shear resistance 282.7 kN

Hence section is satisfactory, no shear reinforcement is required.

Check punching shear at column face

Check punching shear at column face:
Eccentricity factor β beta=1
Shear stress at column perimeter vEd=beta*VEd*1000/(uo*d)=1.796 N/mm²
Maximum punching shear resistance vRdmax=0.5*v*fcd=4.973 N/mm²
Shear stress at column perimeter is within the maximum punching shear resistance, hence satisfactory.

Check punching shear at 2d:
Shear stress at control perimeter vEd=beta*VEd*1000/(u1*d)=1.006 N/mm²
Design punching shear resistance vRdc=(0.18/gamc)*k*(100*p1
*fck)^0.333=0.4594 N/mm²
Enhanced punching shear resist. vRdc=senh*vRdc=1.421 N/mm²
Design punching shear resistance vRdc=senh*0.035*k^1.5*fck^0.5
=1.534 N/mm²
Check punching shear at 2d:
Shear stress at control perimeter vEd=beta*VEd*1000/(u1*d)=0.4176 N/mm²
Design punching shear resistance vRdc=(0.18/gamc)*k*(100*p1
*fck)^0.333=0.4594 N/mm²

Enhanced punching shear resist. vRdc=senh*vRdc=0.5016 N/mm²
Design punching shear resistance vRdc=senh*0.035*k^1.5*fck^0.5
=0.5415 N/mm²

MAIN REINFORCEMENT IN X-DIRECTION SUMMARY	**Characteristic strength**	**500 N/mm²**
	Diameter of bars	**12 mm**
	Spacing	**180 mm**
	Total number of bars	**13**
	Total area required	**1410 mm²**
	Total area provided	**1470 mm²**
MAIN REINFORCEMENT IN Y-DIRECTION SUMMARY	**Characteristic strength**	**500 N/mm²**
	Diameter of bars	**12 mm**
	Spacing	**180 mm**
	Total number of bars	**13**
	Total area required	**1410 mm²**
	Total area provided	**1470 mm²**
DISTRIBUTION REINFORCEMENT SUMMARY	**Characteristic strength**	**500 N/mm²**
	Diameter of bars	**12 mm**
IN X-DIRECTION:		
In top:	**Number of bars**	**12**
	Spacing of bars	**185 mm**
	Area required	**600 mm²/m**
	Area provided	**611.3 mm²/m**
IN Y-DIRECTION:		
In top:	**Number of bars**	**12**
	Spacing of bars	**185 mm**
	Area required	**600 mm²/m**
	Area provided	**611.3 mm²/m**
SIDE BARS SUMMARY	**Characteristic strength**	**500 N/mm²**
	Diameter of bars	**12 mm**
	Total number of bars	**4**
	Spacing of bars	**250 mm**
QUANTITIES	**Total concrete volume**	**2.209 m³**
	Total area of formwork	**3.76 m²**

Location: Pilecap at G3

Design to BS8110(1997) with partial safety factor for steel gammaS=1.15
Bottom layer of main steel is assumed to run in X-direction.

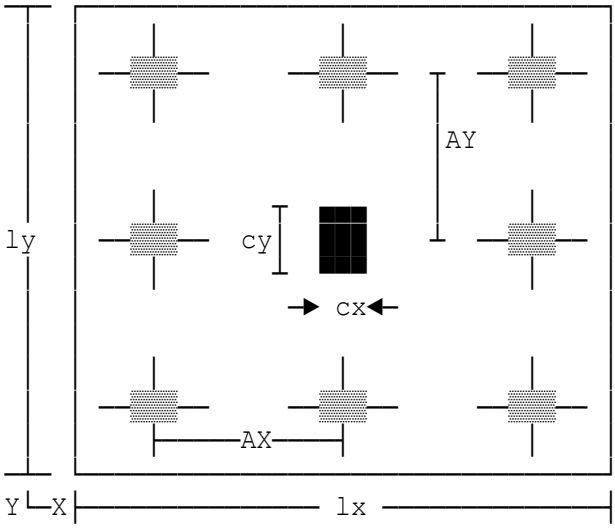

Pilecap for nine piles

Based on Bending Theory. Calculations are in accordance with BS8110. Main reinforcement is arranged in bands parallel to principal axes and is symmetrical about pile centres.

For bond calculations, any high-yield bars are assumed Type 2:deformed.

Total ultimate load on column	N=12600 kN
Nominal pile diameter	PileD=450 mm
Column dimension cx	cx=500 mm
Column dimension cy	cy=500 mm
Spc.of pile ctrs in X-direction	AX=1350 mm
Overhang: pile face to cap edge	olap=150 mm
Length of pilecap	lx=3450 mm
Spc.of pile ctrs in Y-direction	AY=1350 mm
Breadth of pilecap	ly=3450 mm
Concrete grade	fcu=35 N/mm²
Steel strength	fy=500 N/mm²
Cover to underside of main bars	Cover=150 mm
Side and top cover to main bars	Scvr=75 mm
Chosen depth of pilecap	h=1690 mm

Design of main steel in X-direction

Main steel diameter	diaX=16 mm
Main steel spacing	SpcX=85 mm

Design of main steel in Y-direction

Main steel diameter	diaY=16 mm
Main steel spacing	SpcY=85 mm

Distribution steel

Diameter of bar	LSize=25 mm
Spacing of bars	LSpac=220 mm

MAIN REINFORCEMENT	**Characteristic strength**	**500 N/mm²**
IN X-DIRECTION:	**Diameter of bars**	**16 mm**
SUMMARY	**Spacing**	**85 mm**
	Total number of bars	**39**
	Total area required	**7579.7 mm²**
	Total area provided	**7841.4 mm²**
	Volume of steel	**40877 cm³**
	Weight of steel	**320.89 kg**
MAIN REINFORCEMENT	**Characteristic strength**	**500 N/mm²**
IN Y-DIRECTION:	**Diameter of bars**	**16 mm**
SUMMARY	**Spacing**	**85 mm**
	Total number of bars	**39**
	Total area required	**7579.7 mm²**
	Total area provided	**7841.4 mm²**
	Volume of steel	**41191 cm³**
	Weight of steel	**323.35 kg**
DISTRIBUTION REINFORCEMENT	**Characteristic strength**	**500 N/mm²**
SUMMARY	**Diameter of bars**	**25 mm**
IN X-DIRECTION:		
In top:	**Number of bars**	**15**
	Spacing of bars	**220 mm**
	Area required	**2197 mm²/m**
	Area provided	**2231.2 mm²/m**
	Volume of steel	**24298 cm³**
	Weight of steel	**190.74 kg**
IN Y-DIRECTION:		
In top:	**Number of bars**	**15**
	Spacing of bars	**220 mm**
	Area required	**2197 mm²/m**
	Area provided	**2231.2 mm²/m**
	Volume of steel	**24298 cm³**
	Weight of steel	**190.74 kg**
SIDE BARS SUMMARY	**Characteristic strength**	**500 N/mm²**
	Diameter of bars	**12 mm**
	Total number of bars	**24**
	Spacing of bars	**250 mm**
	Volume of steel	**10260 cm³**
	Weight of steel	**80.542 kg**
QUANTITIES	**Total volume of concrete needed**	**20.115 m³**
	Total area of formwork	**23.322 m²**
	Total volume of steel	**140925 cm³**
	Total weight of steel	**1106.3 kg**
	Approx.self-weight of pilecap	**675.87 kN**
	Approx.total load on each pile	**1476 kN**

Location: Cap for heavily-loaded column using mild steel reinf.

Design to BS8110(1997) with partial safety factor for steel gammaS=1.15
Bottom layer of main steel is assumed to run in X-direction.

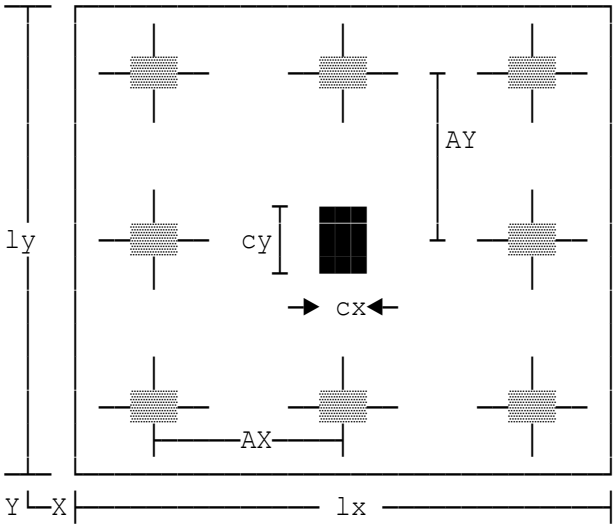

Pilecap for nine piles

Based on Bending Theory. Calculations are in accordance with BS8110. Main reinforcement is arranged in bands parallel to principal axes and is symmetrical about pile centres.

For bond calculations, any high-yield bars are assumed Type 2:deformed.

Total ultimate load on column	N=30000 kN
Nominal pile diameter	PileD=500 mm
Column dimension cx	cx=600 mm
Column dimension cy	cy=600 mm
Spc.of pile ctrs in X-direction	AX=1500 mm
Overhang: pile face to cap edge	olap=300 mm
Length of pilecap	lx=4100 mm
Spc.of pile ctrs in Y-direction	AY=1500 mm
Breadth of pilecap	ly=4100 mm
Concrete grade	fcu=35 N/mm²
Steel strength	fy=250 N/mm²
Cover to underside of main bars	Cover=150 mm
Side and top cover to main bars	Scvr=75 mm
Chosen depth of pilecap	h=2840 mm

Design of main steel in X-direction

Main steel diameter	diaX=25 mm
Main steel spacing	SpcX=70 mm

Design of main steel in Y-direction

Main steel diameter	diaY=25 mm
Main steel spacing	SpcY=70 mm

Distribution steel

Diameter of bar	LSize=50 mm
Spacing of bars	LSpac=285 mm

MAIN REINFORCEMENT	**Characteristic strength**	**250 N/mm²**
IN X-DIRECTION:	**Diameter of bars**	**25 mm**
SUMMARY	**Spacing**	**70 mm**
	Total number of bars	**57**
	Total area required	**27946 mm²**
	Total area provided	**27980 mm²**
	Volume of steel	**216564 cm³**
	Weight of steel	**1700 kg**
MAIN REINFORCEMENT	**Characteristic strength**	**250 N/mm²**
IN Y-DIRECTION:	**Diameter of bars**	**25 mm**
SUMMARY	**Spacing**	**70 mm**
	Total number of bars	**57**
	Total area required	**27946 mm²**
	Total area provided	**27980 mm²**
	Volume of steel	**217963 cm³**
	Weight of steel	**1711 kg**
DISTRIBUTION REINFORCEMENT	**Characteristic strength**	**250 N/mm²**
SUMMARY	**Diameter of bars**	**50 mm**
IN X-DIRECTION:		
In top:	**Number of bars**	**14**
	Spacing of bars	**285 mm**
	Area required	**6816 mm²/m**
	Area provided	**6889.5 mm²/m**
	Volume of steel	**108581 cm³**
	Weight of steel	**852.36 kg**
IN Y-DIRECTION:		
In top:	**Number of bars**	**14**
	Spacing of bars	**285 mm**
	Area required	**6816 mm²/m**
	Area provided	**6889.5 mm²/m**
	Volume of steel	**108581 cm³**
	Weight of steel	**852.36 kg**
SIDE BARS SUMMARY	**Characteristic strength**	**250 N/mm²**
	Diameter of bars	**12 mm**
	Total number of bars	**44**
	Spacing of bars	**250 mm**
	Volume of steel	**21896 cm³**
	Weight of steel	**171.88 kg**
QUANTITIES	**Total volume of concrete needed**	**47.74 m³**
	Total area of formwork	**46.576 m²**
	Total volume of steel	**673585 cm³**
	Total weight of steel	**5287.6 kg**
	Approx.self-weight of pilecap	**1604.1 kN**
	Approx.total load on each pile	**3512 kN**

Location: Cap for lightly-loaded column

Design to BS8110(1997) with partial safety factor for steel gammaS=1.15
Bottom layer of main steel is assumed to run in X-direction.

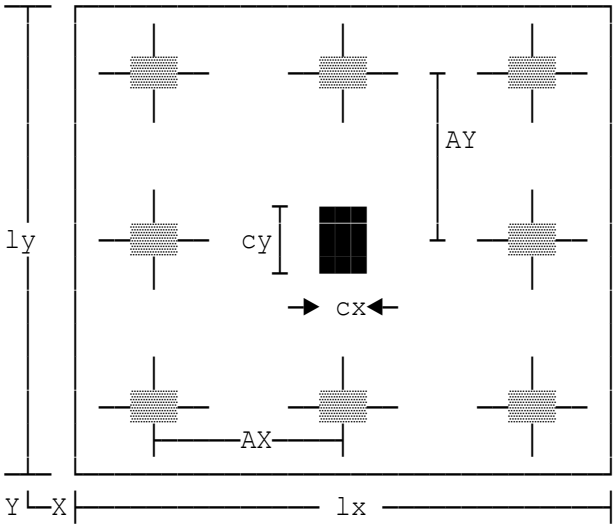

Pilecap for nine piles

Based on Bending Theory. Calculations are in accordance with BS8110. Main reinforcement is arranged in bands parallel to principal axes and is symmetrical about pile centres.

For bond calculations, any high-yield bars are assumed Type 2:deformed.

Total ultimate load on column	N=500 kN
Nominal pile diameter	PileD=250 mm
Column dimension cx	cx=300 mm
Column dimension cy	cy=300 mm
Spc.of pile ctrs in X-direction	AX=750 mm
Overhang: pile face to cap edge	olap=300 mm
Length of pilecap	lx=2350 mm
Spc.of pile ctrs in Y-direction	AY=750 mm
Breadth of pilecap	ly=2350 mm
Concrete grade	fcu=35 N/mm²
Steel strength	fy=500 N/mm²
Cover to underside of main bars	Cover=150 mm
Side and top cover to main bars	Scvr=75 mm
Chosen depth of pilecap	h=300 mm

Design of main steel in X-direction

Main steel diameter	diaX=16 mm
Main steel spacing	SpcX=225 mm

Design of main steel in Y-direction

Main steel diameter	diaY=12 mm
Main steel spacing	SpcY=105 mm

Distribution steel

Diameter of bar	LSize=12 mm
Spacing of bars	LSpac=285 mm

MAIN REINFORCEMENT	**Characteristic strength**	**500 N/mm²**
IN X-DIRECTION:	**Diameter of bars**	**16 mm**
SUMMARY	**Spacing**	**225 mm**
	Total number of bars	**10**
	Total area required	**1939.1 mm²**
	Total area provided	**2010.6 mm²**
	Volume of steel	**4720.9 cm³**
	Weight of steel	**37.059 kg**
MAIN REINFORCEMENT	**Characteristic strength**	**500 N/mm²**
IN Y-DIRECTION:	**Diameter of bars**	**12 mm**
SUMMARY	**Spacing**	**105 mm**
	Total number of bars	**21**
	Total area required	**2287 mm²**
	Total area provided	**2375 mm²**
	Volume of steel	**5225.1 cm³**
	Weight of steel	**41.017 kg**
DISTRIBUTION REINFORCEMENT	**Characteristic strength**	**500 N/mm²**
SUMMARY	**Diameter of bars**	**12 mm**
IN X-DIRECTION:		
In top:	**Number of bars**	**8**
	Spacing of bars	**285 mm**
	Area required	**390 mm²/m**
	Area provided	**396.83 mm²/m**
	Volume of steel	**1990.5 cm³**
	Weight of steel	**15.626 kg**
IN Y-DIRECTION:		
In top:	**Number of bars**	**8**
	Spacing of bars	**285 mm**
	Area required	**390 mm²/m**
	Area provided	**396.83 mm²/m**
	Volume of steel	**1990.5 cm³**
	Weight of steel	**15.626 kg**
SIDE BARS SUMMARY	**Characteristic strength**	**500 N/mm²**
	Diameter of bars	**12 mm**
	Total number of bars	**4**
	Spacing of bars	**250 mm**
	Volume of steel	**1210.1 cm³**
	Weight of steel	**9.4996 kg**
QUANTITIES	**Total volume of concrete needed**	**1.6568 m³**
	Total area of formwork	**2.82 m²**
	Total volume of steel	**15137 cm³**
	Total weight of steel	**118.83 kg**
	Approx.self-weight of pilecap	**55.667 kN**
	Approx.total load on each pile	**62 kN**

Location: Ex1 - Pilecap at G3

Bottom layer of main steel is assumed to run in X-direction.

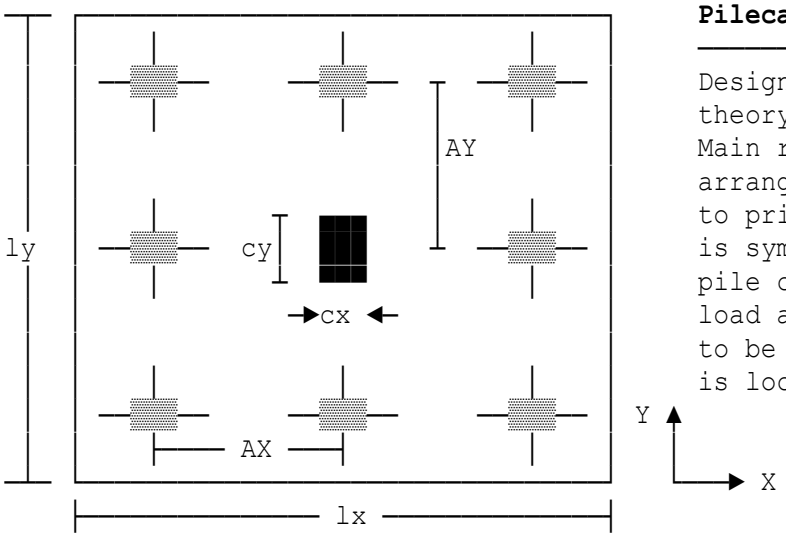

Pilecap for nine piles

Designed using bending theory to EC2 Part 1-1. Main reinforcement is arranged in bands // to principal axes and is symmetrical about pile centres. Ultimate load and moment values to be used. Ninth pile is located under column.

Total design load on column	N=10600 kN
Nominal pile diameter	PileD=450 mm
Column dimension cx	cx=500 mm
Column dimension cy	cy=500 mm
Partial safety factor for steel	gams=1.15
Partial safety factor for conc.	gamc=1.5
Spacing of pile ctrs in X-dir	AX=1350 mm
Overhang: pile face to cap edge	olap=150 mm
Length of pilecap	lx=3450 mm
Spacing of pile ctrs in Y-dir	AY=1350 mm
Breadth of pilecap	ly=3450 mm
Char yield strength of reinft.	fyk=500 N/mm²
Cover to underside of main bars	Cover=150 mm
Side and top cover to main bars	Scvr=75 mm
Chosen depth of pilecap	h=1690 mm

Design of main steel in X-direction

Main steel diameter	diaX=20 mm
Main steel spacing	SpcX=120 mm

Design of main steel in Y-direction

Main steel diameter	diaY=20 mm
Main steel spacing	SpcY=120 mm

Distribution steel

Distribution steel diameter	LSize=25 mm
Spacing of bars	LSpac=190 mm
Area of dist.steel provided	A2=PI*LSize^2*250/LSpac=2584 mm²/m

Check shear resistance in X-direction

At Critical Plane 1:

Shear force due to ultimate load	VEd=N/3+Mx'*1000/AX=3533 kN
Shear resistance	VRdc=beta'*CRdc*ks*vRdc*bw*d/1000 =4778 kN
Modified shear resistance	VRdc=VRdm=5265 kN

SHEAR SUMMARY	**Shear force**	**3533 kN**
	Shear resistance	**5265 kN**

Hence section is satisfactory, no shear reinforcement is required.

Check shear resistance in Y-direction

Shear force due to ultimate load	VEd=N/3+My'*1000/AY=3533 kN
Shear resistance	VRdc=beta'*CRdc*ks*vRdc*bw*d/1000 =4682 kN
Modified shear resistance	VRdc=VRdm=5142 kN

SHEAR SUMMARY	**Shear force**	**3533 kN**
	Shear resistance	**5142 kN**

Hence section is satisfactory, no shear reinforcement is required.

Check punching shear

Check punching shear at column face:

Eccentricity factor β	beta=1
Shear stress at column perimeter	vEd=beta*VEd*1000/(uo*d)=3.51 N/mm²
Maximum punching shear resistance	vRdmax=0.5*v*fcd=5.581 N/mm²

Shear stress at column perimeter is within the maximum punching shear resistance, hence satisfactory.

MAIN REINFORCEMENT	**Characteristic strength**	**500 N/mm²**
IN X-DIRECTION:	**Diameter of bars**	**20 mm**
SUMMARY	**Spacing**	**120 mm**
	Total number of bars	**28**
	Total area required	**8746 mm²**
	Total area provided	**8796 mm²**
MAIN REINFORCEMENT	**Characteristic strength**	**500 N/mm²**
IN Y-DIRECTION:	**Diameter of bars**	**20 mm**
SUMMARY	**Spacing**	**120 mm**
	Total number of bars	**28**
	Total area required	**8746 mm²**
	Total area provided	**8796 mm²**
DISTRIBUTION REINFORCEMENT	**Characteristic strength**	**500 N/mm²**
SUMMARY	**Diameter of bars**	**25 mm**
IN X-DIRECTION:		
In top:	**Number of bars**	**18**
	Spacing of bars	**190 mm**
	Area required	**2535 mm²/m**
	Area provided	**2584 mm²/m**

IN Y-DIRECTION:		
In top:	**Number of bars**	**18**
	Spacing of bars	**190 mm**
	Area required	**2535 mm²/m**
	Area provided	**2584 mm²/m**
SIDE BARS SUMMARY	**Characteristic strength**	**500 N/mm²**
	Diameter of bars	**12 mm**
	Total number of bars	**24**
	Spacing of bars	**250 mm**
QUANTITIES	**Total concrete volume**	**20.12 m³**
	Total area of formwork	**23.32 m²**

Location: Ex2 - Cap for heavily-loaded column w. mild steel reinf.

Bottom layer of main steel is assumed to run in X-direction.

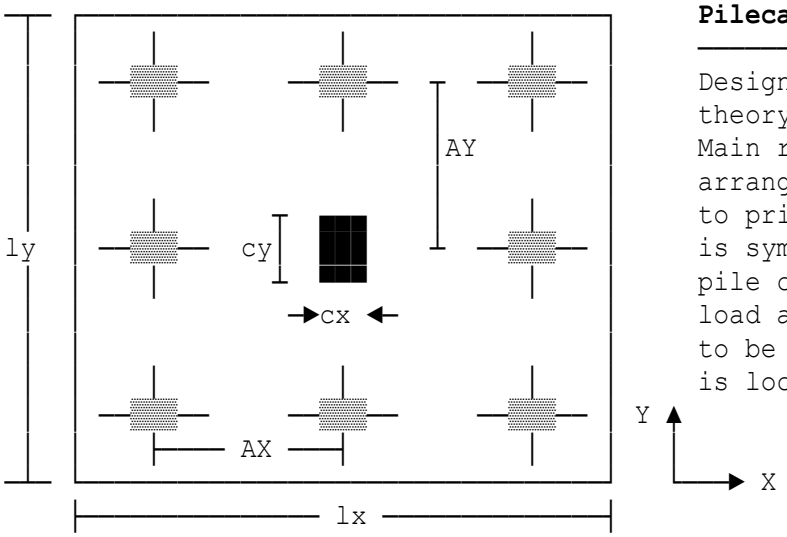

Pilecap for nine piles

Designed using bending theory to EC2 Part 1-1. Main reinforcement is arranged in bands // to principal axes and is symmetrical about pile centres. Ultimate load and moment values to be used. Ninth pile is located under column.

Total design load on column	N=30000 kN
Nominal pile diameter	PileD=500 mm
Column dimension cx	cx=600 mm
Column dimension cy	cy=600 mm
Partial safety factor for steel	gams=1.15
Partial safety factor for conc.	gamc=1.5
Spacing of pile ctrs in X-dir	AX=1500 mm
Overhang: pile face to cap edge	olap=300 mm
Length of pilecap	lx=4100 mm
Spacing of pile ctrs in Y-dir	AY=1500 mm
Breadth of pilecap	ly=4100 mm
Char yield strength of reinft.	fyk=500 N/mm²
Cover to underside of main bars	Cover=150 mm
Side and top cover to main bars	Scvr=75 mm
Chosen depth of pilecap	h=3200 mm

Design of main steel in X-direction

Main steel diameter	diaX=16 mm
Main steel spacing	SpcX=40 mm

Design of main steel in Y-direction

Main steel diameter	diaY=16 mm
Main steel spacing	SpcY=40 mm

Distribution steel

Distribution steel diameter	LSize=40 mm
Spacing of bars	LSpac=260 mm
Area of dist.steel provided	A2=PI*LSize^2*250/LSpac=4833 mm²/m

Check shear resistance in X-direction

At Critical Plane 1:

Shear force due to ultimate load	VEd=N/3+Mx'*1000/AX=10000 kN
Shear resistance	VRdc=beta'*CRdc*ks*vRdc*bw*d/1000 =12389 kN
Modified shear resistance	VRdc=VRdm=13012 kN

SHEAR SUMMARY	**Shear force**	**10000 kN**
	Shear resistance	**13012 kN**

Hence section is satisfactory, no shear reinforcement is required.

Check shear resistance in Y-direction

Shear force due to ultimate load	VEd=N/3+My'*1000/AY=10000 kN
Shear resistance	VRdc=beta'*CRdc*ks*vRdc*bw*d/1000 =12352 kN
Modified shear resistance	VRdc=VRdm=12954 kN

SHEAR SUMMARY	**Shear force**	**10000 kN**
	Shear resistance	**12954 kN**

Hence section is satisfactory, no shear reinforcement is required.

Check punching shear

Check punching shear at column face:

Eccentricity factor β	beta=1
Shear stress at column perimeter	vEd=beta*VEd*1000/(uo*d)=4.131 N/mm²
Maximum punching shear resistance	vRdmax=0.5*v*fcd=4.973 N/mm²

Shear stress at column perimeter is within the maximum punching shear resistance, hence satisfactory.

MAIN REINFORCEMENT	**Characteristic strength**	**500 N/mm²**
IN X-DIRECTION:	**Diameter of bars**	**16 mm**
SUMMARY	**Spacing**	**40 mm**
	Total number of bars	**99**
	Total area required	**19680 mm²**
	Total area provided	**19905 mm²**
MAIN REINFORCEMENT	**Characteristic strength**	**500 N/mm²**
IN Y-DIRECTION:	**Diameter of bars**	**16 mm**
SUMMARY	**Spacing**	**40 mm**
	Total number of bars	**99**
	Total area required	**19680 mm²**
	Total area provided	**19905 mm²**
DISTRIBUTION REINFORCEMENT	**Characteristic strength**	**500 N/mm²**
SUMMARY	**Diameter of bars**	**40 mm**
IN X-DIRECTION:		
In top:	**Number of bars**	**16**
	Spacing of bars	**260 mm**
	Area required	**4800 mm²/m**
	Area provided	**4833 mm²/m**

IN Y-DIRECTION:		
In top:	**Number of bars**	**16**
	Spacing of bars	**260 mm**
	Area required	**4800 mm²/m**
	Area provided	**4833 mm²/m**
SIDE BARS SUMMARY	**Characteristic strength**	**500 N/mm²**
	Diameter of bars	**12 mm**
	Total number of bars	**48**
	Spacing of bars	**250 mm**
QUANTITIES	**Total concrete volume**	**53.79 m³**
	Total area of formwork	**52.48 m²**

Location: Ex3 - Cap for lightly-loaded column

Bottom layer of main steel is assumed to run in X-direction.

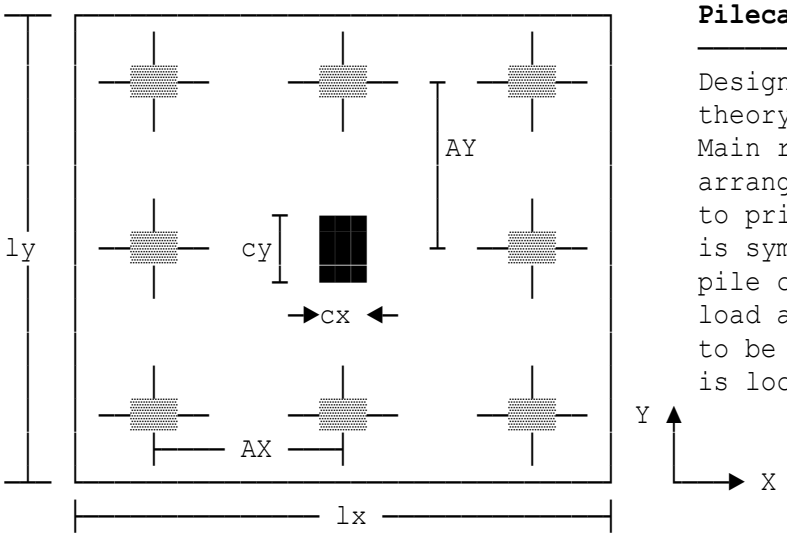

Pilecap for nine piles

Designed using bending theory to EC2 Part 1-1. Main reinforcement is arranged in bands // to principal axes and is symmetrical about pile centres. Ultimate load and moment values to be used. Ninth pile is located under column.

Total design load on column	N=500 kN
Nominal pile diameter	PileD=250 mm
Column dimension cx	cx=300 mm
Column dimension cy	cy=300 mm
Partial safety factor for steel	gams=1.15
Partial safety factor for conc.	gamc=1.5
Spacing of pile ctrs in X-dir	AX=750 mm
Overhang: pile face to cap edge	olap=300 mm
Length of pilecap	lx=2350 mm
Spacing of pile ctrs in Y-dir	AY=750 mm
Breadth of pilecap	ly=2350 mm
Char yield strength of reinft.	fyk=500 N/mm²
Cover to underside of main bars	Cover=150 mm
Side and top cover to main bars	Scvr=75 mm
Chosen depth of pilecap	h=300 mm

Design of main steel in X-direction

Main steel diameter	diaX=16 mm
Main steel spacing	SpcX=225 mm

Design of main steel in Y-direction

Main steel diameter	diaY=12 mm
Main steel spacing	SpcY=105 mm

Distribution steel

Distribution steel diameter	LSize=12 mm
Spacing of bars	LSpac=250 mm
Area of dist.steel provided	A2=PI*LSize^2*250/LSpac=452.4 mm²/m

Check shear resistance in X-direction

At Critical Plane 1:
Shear force due to ultimate load VEd=N/3+Mx'*1000/AX=166.7 kN
Shear resistance VRdc=beta'*CRdc*ks*vRdc*bw*d/1000
=205.4 kN

SHEAR SUMMARY	**Shear force**	**166.7 kN**
	Shear resistance	**205.4 kN**

Hence section is satisfactory, no shear reinforcement is required.

Check shear resistance in Y-direction

Shear force due to ultimate load VEd=N/3+My'*1000/AY=166.7 kN
Shear resistance VRdc=beta'*CRdc*ks*vRdc*bw*d/1000
=202.6 kN

SHEAR SUMMARY	**Shear force**	**166.7 kN**
	Shear resistance	**202.6 kN**

Hence section is satisfactory, no shear reinforcement is required.

Check punching shear

Check punching shear at column face:
Eccentricity factor β beta=1
Shear stress at column perimeter vEd=beta*VEd*1000/(uo*d)=3.255 N/mm²
Maximum punching shear resistance vRdmax=0.5*v*fcd=4.973 N/mm²
Shear stress at column perimeter is within the maximum punching shear resistance, hence satisfactory.

MAIN REINFORCEMENT	**Characteristic strength**	**500 N/mm²**
IN X-DIRECTION:	**Diameter of bars**	**16 mm**
SUMMARY	**Spacing**	**225 mm**
	Total number of bars	**10**
	Total area required	**1938 mm²**
	Total area provided	**2011 mm²**
MAIN REINFORCEMENT	**Characteristic strength**	**500 N/mm²**
IN Y-DIRECTION:	**Diameter of bars**	**12 mm**
SUMMARY	**Spacing**	**105 mm**
	Total number of bars	**21**
	Total area required	**2284 mm²**
	Total area provided	**2375 mm²**
DISTRIBUTION REINFORCEMENT	**Characteristic strength**	**500 N/mm²**
SUMMARY	**Diameter of bars**	**12 mm**
IN X-DIRECTION:		
In top:	**Number of bars**	**9**
	Spacing of bars	**250 mm**
	Area required	**450 mm²/m**
	Area provided	**452.4 mm²/m**

IN Y-DIRECTION:		
In top:	**Number of bars**	**9**
	Spacing of bars	**250 mm**
	Area required	**450 mm²/m**
	Area provided	**452.4 mm²/m**
SIDE BARS SUMMARY	**Characteristic strength**	**500 N/mm²**
	Diameter of bars	**12 mm**
	Total number of bars	**4**
	Spacing of bars	**250 mm**
QUANTITIES	**Total concrete volume**	**1.657 m³**
	Total area of formwork	**2.82 m²**

Location: Example in Ch 22 of 'Reinforced Concrete Design' by Bray

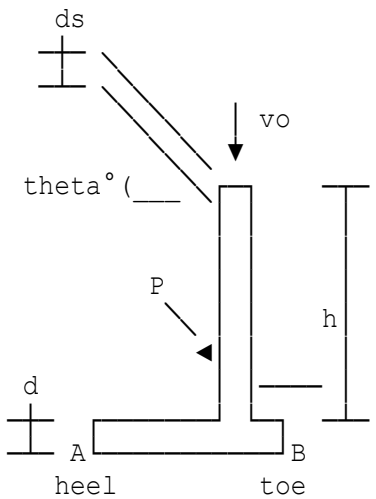

RC retaining wall to BS8002

Using either Rankine or Coulomb theory, the following assumptions are made:

- surface of rupture is a plane
- point of resultant pressure P on back back of wall is at one third of the distance up from the base of the wall.

Weight/unit vol.of retained soil	w=18.8 kN/m³
Height of wall	h=4.38 m
Load above wall supported on stem	vo=0 kN/m
Angle of slope of soil (if any)	theta=0°
Internal friction angle of soil φ	phi=30°
Angle of wall-to-soil friction δ	delta=20°
Friction factor on underside base	fb=0.4
Thickness of wall	t=0.22 m
Density of wall (stem)	dt=24 kN/m³

Forces and moments on wall

Maximum B.M. at base of stem	M=Ph*h/3+Psh*h/2=87.762 kNm/m
Maximum S.F. at base of stem	S=Ph+Psh=60.111 kN/m

Base

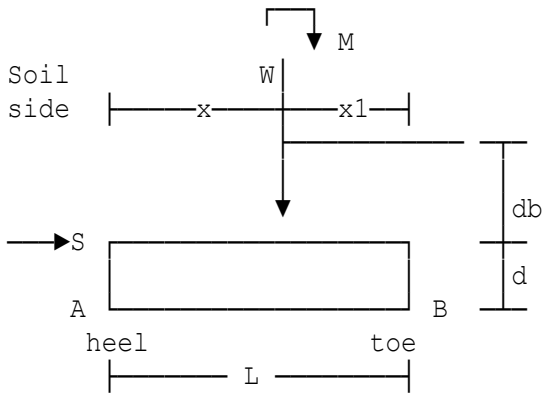

Thickness of base	d=0.19 m
Length of base	L=3.124 m
Distance from A to centre of stem	x=1.86 m
Depth of soil over base at toe	db=0 m
Depth of soil for passive resist.	dp=1.5 m
Allowable ground pressure	p=75 kN/m²

Centroid of load lies within middle third. Pressure varies from pa at A to pb at B.

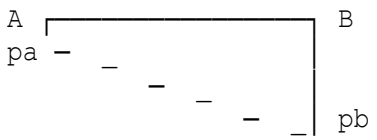

Maximum pressure is at B pmax=pb=62.75 kN/m²
As pmax does not exceed p (62.75 kN/m² ≤ 75 kN/m²), pressure beneath base is within specified limit.

Shear forces and bending moments on base

Total S.F. on toe (plus is up) Swb=((pwb+pb)/2-dt*d)*(x1-t/2)-wf
=65.165 kN/m
Total S.F. on heel (plus is up) Swa=Sau-Sad=-54.011 kN/m
Total B.M. on toe (plus is up) Mwb=(2*pb+pwb)*(x1-t/2)^2/6-Mbd
=37.982 kNm/m
Total B.M. on heel (plus is up) Mwa=(2*pa+pwa)*(x-t/2)^2/6-Mad
=-48.592 kNm/m

Resistance to sliding

FoS sliding (frict.resist.only) FOSF=F/St=1.1093
FoS sliding (friction/cohesion + passive) FOSF2=(F+R)/St=2.0789

Resistance to overturning

Rotation assumed to occur about lowest forward edge of base (i.e. toe).
Safety factors against overturning:
Including vert.comp.of pressure FOSOT1=Mr1/Mot=3.7675
Ignoring vert.comp.of pressure FOSOT2=Mr2/Mot=3.7675

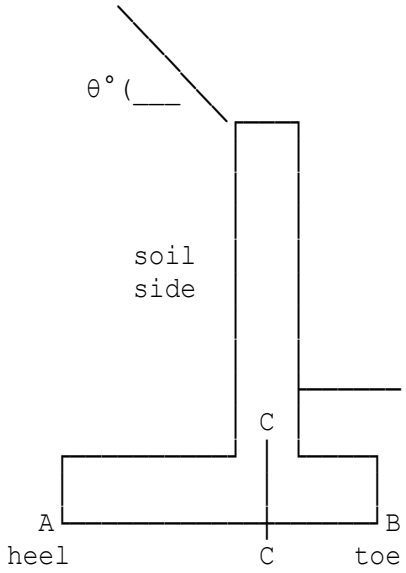

Design Summary

Moment at base of stem	87.762 kNm
Shear at base of stem	60.111 kN
Moment at c-c (toe)	37.982 kNm
Shear at c-c (toe)	65.165 kN
Moment at c-c (heel)	-48.592 kNm
Shear at c-c (heel)	-54.011 kN
FoS for Overturning:	
(1) With vertical component of earth pressure considered	3.7675
(2) Ignoring vertical component of earth pressure	3.7675
FoS for Sliding:	
(1) Friction only	1.1093
(2) Friction+passive	2.0789
Pressure at A	53.43 kN/m²
Pressure at B	62.75 kN/m²
Allowable GBP	75 kN/m²

NOTE: The sliding resistance calculation check assumes that a
a heel beam/key will be provided to the underside of base.

Location: Massive, heavily-loaded wall with cohesionless soil

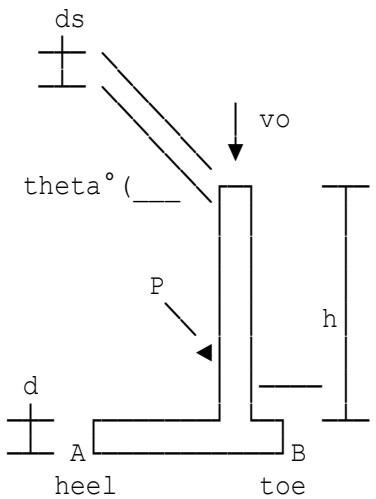

RC retaining wall to BS8002

Using either Rankine or Coulomb theory, the following assumptions are made:

- surface of rupture is a plane
- point of resultant pressure P on back back of wall is at one third of the distance up from the base of the wall.

Weight/unit vol.of retained soil	w=25 kN/m³
Height of wall	h=20 m
Depth of soil surcharge	ds=5 m
Load above wall supported on stem	vo=1000 kN/m
Angle of slope of soil (if any)	theta=15°
Internal friction angle of soil φ	phi=35°
Angle of wall-to-soil friction δ	delta=23.333°
Friction factor on underside base	fb=0.4
Thickness of wall	t=1.5 m
Density of wall (stem)	dt=24 kN/m³

Forces and moments on wall

Maximum B.M. at base of stem	M=Ph*h/3+Psh*h/2=16100 kNm/m
Maximum S.F. at base of stem	S=Ph+Psh=2087.8 kN/m

Base

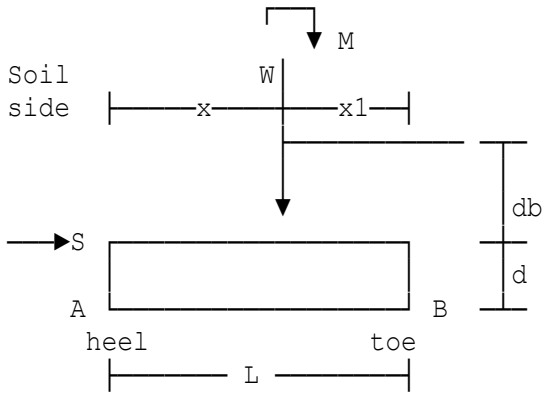

Thickness of base	d=2 m
Length of base	L=20 m
Distance from A to centre of stem	x=15 m
Depth of soil over base at toe	db=0 m
Depth of soil for passive resist.	dp=2 m

Allowable ground pressure p=700 kN/m²
Centroid of load lies within middle third. Pressure varies from pa at A to pb at B.

```
     A ┌──────────────┐ B
     pa │ _           │
        │   _  _      │
        │        _  _ │
        │           _ │ pb
```

Maximum pressure is at B pmax=pb=680.73 kN/m²
As pmax does not exceed p (680.73 kN/m² ≤ 700 kN/m²), pressure beneath base is within specified limit.

Shear forces and bending moments on base

Total S.F. on toe (plus is up) Swb=((pwb+pb)/2-dt*d)*(x1-t/2)-wf
=2657.2 kN/m
Total S.F. on heel (plus is up) Swa=Sau-Sad=-1218 kN/m
Total B.M. on toe (plus is up) Mwb=(2*pb+pwb)*(x1-t/2)^2/6-Mbd
=5669.2 kNm/m
Total B.M. on heel (plus is up) Mwa=(2*pa+pwa)*(x-t/2)^2/6-Mad
=-11146 kNm/m

Resistance to sliding

FoS sliding (frict.resist.only) FOSF=F/St=2.1557
FoS sliding (friction/cohesion + passive) FOSF2=(F+R)/St=2.2328

Resistance to overturning

Rotation assumed to occur about lowest forward edge of base (i.e. toe).
Safety factors against overturning:
Including vert.comp.of pressure FOSOT1=Mr1/Mot=7.2725
Ignoring vert.comp.of pressure FOSOT2=Mr2/Mot=7.0898

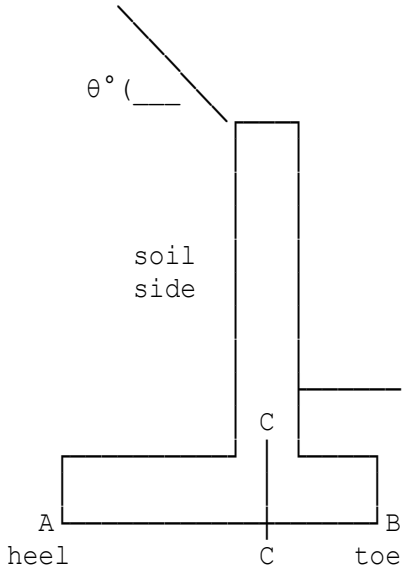

Design Summary

Moment at base of stem	16100 kNm
Shear at base of stem	2087.8 kN
Moment at c-c (toe)	5669.2 kNm
Shear at c-c (toe)	2657.2 kN
Moment at c-c (heel)	-11146 kNm
Shear at c-c (heel)	-1218 kN

FoS for Overturning:	
(1) With vertical component of earth pressure considered	7.2725
(2) Ignoring vertical component of earth pressure	7.0898

FoS for Sliding:	
(1) Friction only	2.1557
(2) Friction+passive	2.2328

Pressure at A	610.08 kN/m²
Pressure at B	680.73 kN/m²
Allowable GBP	700 kN/m²

Location: Cohesive soil, triangular soil pressure dist.

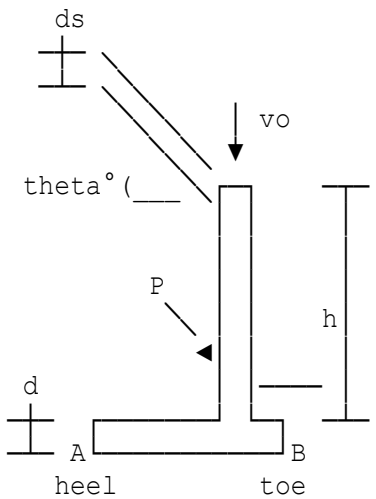

RC retaining wall to BS8002

Using either Rankine or Coulomb theory, the following assumptions are made:

- surface of rupture is a plane
- point of resultant pressure P on back back of wall is at one third of the distance up from the base of the wall.

Weight/unit vol.of retained soil	w=20 kN/m³
Height of wall	h=6 m
Pressure due to surcharge	press=100 kN/m²
Load above wall supported on stem	vo=0 kN/m
Angle of slope of soil (if any)	theta=-10°
Internal friction angle of soil φ	phi=35°
Angle of wall-to-soil friction δ	delta=23.333°
Cohesion of clay under base	fc=100 kN/m²
Thickness of wall	t=0.22 m
Density of wall (stem)	dt=24 kN/m³

Forces and moments on wall

Maximum B.M. at base of stem	M=Ph*h/3+Psh*h/2=594.42 kNm/m
Maximum S.F. at base of stem	S=Ph+Psh=222.56 kN/m

Base

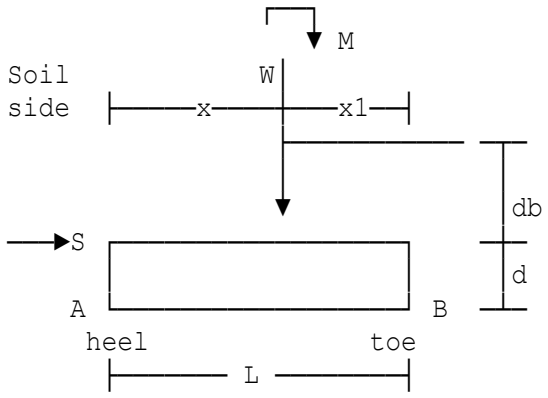

Thickness of base	d=0.4 m
Length of base	L=5.25 m
Distance from A to centre of stem	x=0.11 m
Depth of soil over base at toe	db=2 m
Depth of soil for passive resist.	dp=4 m

Allowable ground pressure p=500 kN/m²
Centroid of load outside middle third giving triangular distribution of pressure.
Pressure varies from 0 at distance dp from A to a maximum of pb at B.

```
      ├─dp─┼────lb────┤
   A ──────────────────┐ B
          \            │
             \         │ pb
                \      │
                   \   │
```

Maximum pressure is at B pmax=pb=150.9 kN/m²
As pmax does not exceed p (150.9 kN/m² ≤ 500 kN/m²), pressure beneath base is within specified limit.

Shear forces and bending moments on base

Total S.F. on toe (plus is up) Swb=((pwb+pb)/2-dt*d)*(x1-t/2)-wf
=137.74 kN/m
Total S.F. on heel (plus is up) Swa=-dt*d*(x-t/2)-wbe-wbs=0 kN/m
Total B.M. on toe (plus is up) Mwb=(2*pb+pwb)*(x1-t/2)^2/6-Mbd
=658.12 kNm/m
Total B.M. on heel (plus is up)

Resistance to sliding

FoS sliding (cohes.resist.only) FOSF=F/St=1.0637
FoS sliding (friction/cohesion + passive) FOSF2=(F+R)/St=3.5101

Resistance to overturning

Rotation assumed to occur about lowest forward edge of base (i.e. toe).
Safety factors against overturning:
Including vert.comp.of pressure FOSOT1=Mr1/Mot=1.9682
Ignoring vert.comp.of pressure FOSOT2=Mr2/Mot=1.17

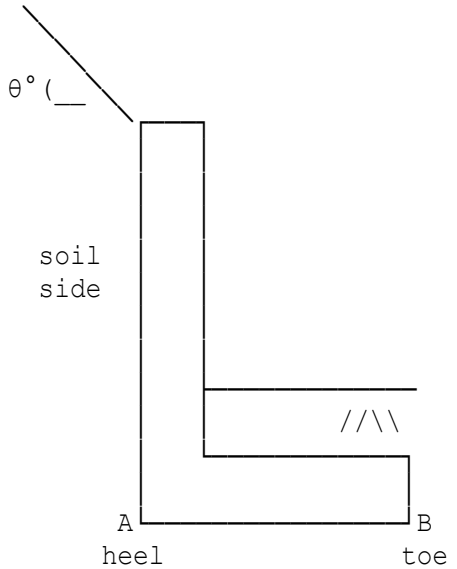

Design Summary

Moment at stem base	594.42 kNm
Shear at stem base	222.56 kN
Moment on toe	658.12 kNm
Shear on toe	137.74 kN
FoS for Overturning	
(1) With vertical component of earth pressure considered	1.9682
(2) Ignoring vertical component of earth pressure	1.17
FoS for Sliding	
(1) Friction only	1.0637
(2) Friction+passive	3.5101
Maximum pressure at B	150.9 kN/m²
Allowable GBP	500 kN/m²

NOTE: The sliding resistance calculation check assumes that a
a heel beam/key will be provided to the underside of base.

Location: Ex1 - RC retaining wall

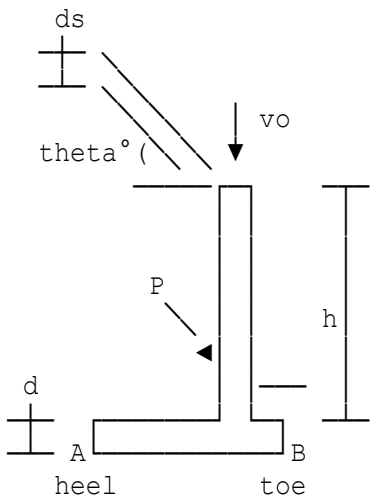

Reinforced concrete retaining wall to EC7

Using either Rankine or Coulomb theory, the following assumptions are made:

- the surface of rupture is assumed to be plane
- point of resultant pressure P on back of wall is at one third of the distance up from the base of the wall.

Weight/unit vol.of retained soil	w=18.8 kN/m³
Wall height	h=4 m
Load above wall supported on stem	vo=0 kN/m
Angle of slope of soil (if any)	theta=0°
Angle of wall-to-soil friction δ	delta=0°
Friction factor @ underside base	fb=0.5
Thickness of wall	t=0.3 m
Base thickness	d=0.3 m
Density of wall (stem)	den=25 kN/m³

Forces and moments on wall - SLS

compute	M1=Ph*(d/2+h/3)=74.364 kNm/m
compute	M2=Psh*(d/2+h/2)=0 kNm/m
Maximum stem bending moment	M=M1+M2=74.364 kNm/m
Horizontal shear at base of stem	V=Ph+Psh=50.133 kN/m

Check bearing pressures - SLS

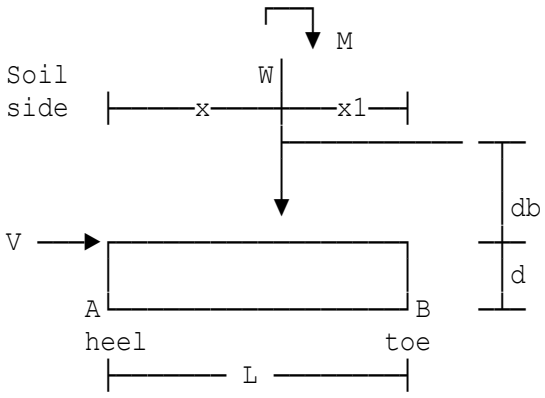

Length of base	L=3.124 m
Distance from A to centre of stem	x=1.86 m
Depth of soil over base at toe	db=0 m
Depth of soil for passive resist.	dp=1.2 m
Allowable ground pressure	p=75 kN/m²

Centroid of load lies within middle third. Pressure varies from pa at A to pb at B.

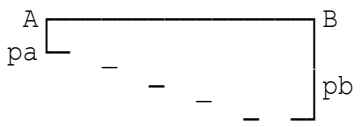

Maximum pressure is at B pmax=pb=58.921 kN/m²
As pmax ≤ p (58.921 kN/m² ≤ 75 kN/m²), the pressure beneath base is within the specified limit.

Partial factors - ULS load combination 1

Partial load factor (backfill) g1=1
Partial load factor (v.surcharge) g2=0

Forces and moments on wall - ULS load combination 1

Stem design moment MEd1=g4*M1+g5*M2=100.39 kNm/m
Horizontal shear at base of stem VEd1=g4*Ph+g5*Psh=67.679 kN/m

Bearing pressures - ULS load combination 1

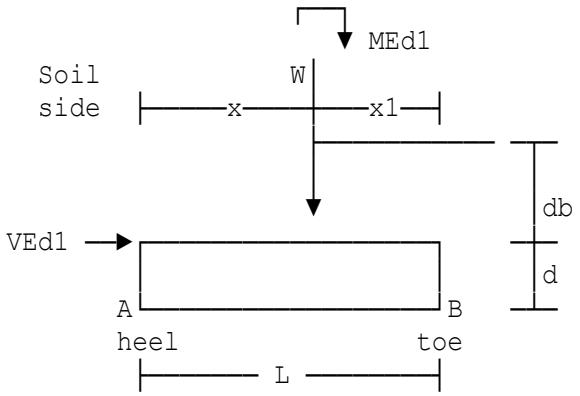

Centroid of load lies within middle third. Pressure varies from pa1 at A to pb1 at B.

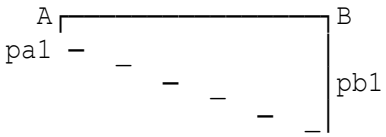

Maximum pressure is at B pmax1=pb1=84.699 kN/m²

Shear forces and bending moments on base - ULS load combination 1

Total S.F. on toe (plus is up) Swb=((pwb+pb1)/2-den*d)*(x1-t/2)-wf1
=77.877 kN/m
Total S.F. on heel (plus is up) Swa=Sau-Sad=-47.372 kN/m
Total B.M. on toe (plus is up) Mwb=(2*pb1+pwb)*(x1-t/2)^2/6-Mbd
=44.885 kNm/m
Total B.M. on heel (plus is up) Mwa=(2*pa1+pwa)*(x-t/2)^2/6-Mad
=-45.958 kNm/m

Resistance to sliding - ULS (load combinations 1 & 2)

Combination 1:
Sliding force SFor=St1'=114.38 kN
Friction plus passive resistance SRes=F+R=131.62 kN
Thus the criterion for sliding is satisfied.

Combination 2:
Coefficient of passive pressure Kp'=2.4442
Sliding force SFor=Ka2/Ka*(g7*P1+g8*P2)=103.99 kN
Friction plus passive resistance SRes=F+R=124.09 kN
Thus the criterion for sliding is satisfied.

Resistance to overturning - ULS (load combinations 1 & 2)

Combination 1:
Total restraining mt.(with Mrv) Mr1=g9*(Mre+Mrw+Mrv)=329.66 kNm/m
ditto (without Mrv) Mr2=g9*(Mre+Mrw)=329.66 kNm/m
Total overturning moment Mot=Mt1+Mt2=91.344 kNm/m

Combination 2:
Total restraining mt.(with Mrv) Mr1=g9'*(Mre+Mrw+Mrv)=329.66 kNm/m
ditto (without Mrv) Mr2=g9'*(Mre+Mrw)=329.66 kNm/m
Total overturning moment Mot=Mt1+Mt2=101.92 kNm/m

Partial factors - ULS load combination 2

Forces and moments on wall - ULS load combination 2

Stem design moment MEd2=g4*M1+g5*M2=74.364 kNm/m
Horizontal shear at base of stem VEd2=g4*Ph+g5*Psh=50.133 kN/m

Bearing pressures - ULS load combination 2

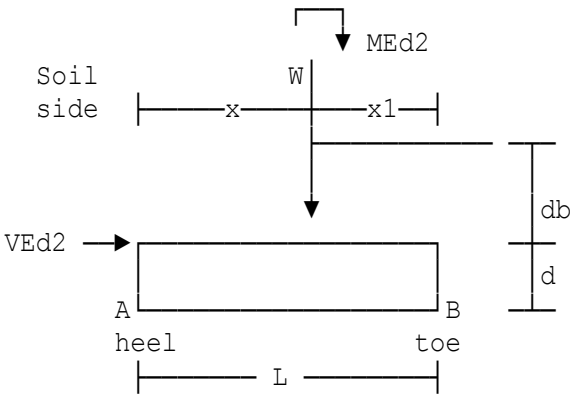

$$Ka2 = \frac{1-SIN(RAD(phid'1))}{1+SIN(RAD(phid'1))}$$

Centroid of load lies within middle third. Pressure varies from pa2 at A to pb2 at B.

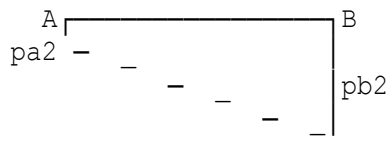

Maximum pressure is at B pmax2=pb2=70.53 kN/m²

Shear forces and bending moments on base - ULS load combination 2

Total S.F. on toe (plus is up)	Swb2=((pwb+pb2)/2-den*d)*(x1-t/2) -wf2=65.343 kN/m
Total S.F. on heel (plus is up)	Swa2=Sau-Sad=-51.275 kN/m
Total B.M. on toe (plus is up)	Mwb2=(2*pb2+pwb)*(x1-t/2)^2/6-Mbd =37.301 kNm/m
Total B.M. on heel (plus is up)	Mwa2=(2*pa2+pwa)*(x-t/2)^2/6-Mad =-47.112 kNm/m

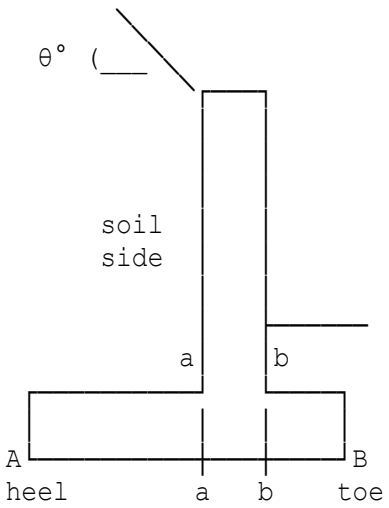

Design Summary - ULS load combinations 1 & 2 to EC7

Moment at base of stem	100.39 kNm
Shear at base of stem	67.679 kN
Moment at b-b (toe)	44.885 kNm
Shear at b-b (toe)	77.877 kN
Moment at a-a (heel)	-47.112 kNm
Shear at a-a (heel)	-51.275 kN

Pressures under base - SLS

Pressure @ A	57.611 kN/m²
Pressure @ B	58.921 kN/m²
Allowable GBP	75 kN/m²

NOTE: The sliding resistance calculation check assumes that a a heel beam/key will be provided to the underside of base.

Location: Ex2 - Massive, heavily-loaded wall with cohesionless soil

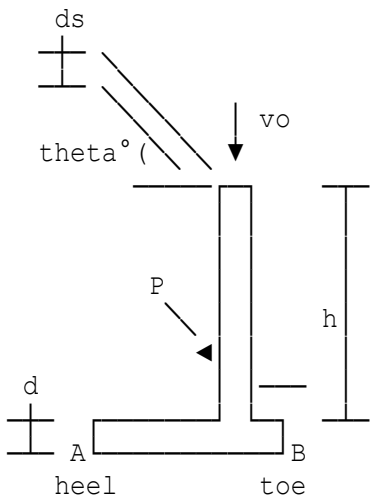

Reinforced concrete retaining wall to EC7

Using either Rankine or Coulomb theory, the following assumptions are made:

- the surface of rupture is assumed to be plane
- point of resultant pressure P on back of wall is at one third of the distance up from the base of the wall.

Weight/unit vol.of retained soil	w=25 kN/m³
Wall height	h=20 m
Depth of soil surcharge	ds=5 m
Load above wall supported on stem	vo=1000 kN/m
Angle of slope of soil (if any)	theta=15°
Angle of wall-to-soil friction δ	delta=0°
Friction factor @ underside base	fb=0.4
Thickness of wall	t=1.5 m
Base thickness	d=2 m
Density of wall (stem)	den=25 kN/m³

Forces and moments on wall - SLS

compute	M1=Ph*(d/2+h/3)=10989 kNm/m
compute	M2=Psh*(d/2+h/2)=7198.3 kNm/m
Maximum stem bending moment	M=M1+M2=18188 kNm/m
Horizontal shear at base of stem	V=Ph+Psh=2087.8 kN/m

Check bearing pressures - SLS

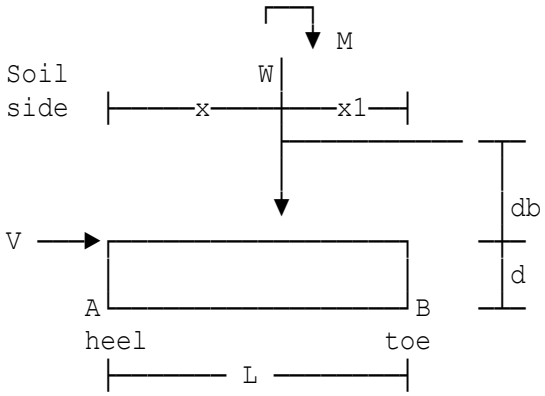

Length of base	L=20 m
Distance from A to centre of stem	x=15 m
Depth of soil over base at toe	db=0 m
Depth of soil for passive resist.	dp=3 m

Allowable ground pressure p=700 kN/m²
Centroid of load lies within middle third. Pressure varies from pa at A to pb at B.

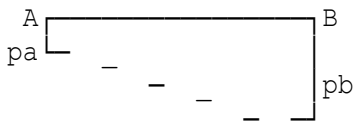

Maximum pressure is at B pmax=pb=686.48 kN/m²
As pmax ≤ p (686.48 kN/m² ≤ 700 kN/m²), the pressure beneath base is within the specified limit.

Partial factors - ULS load combination 1

Partial load factor (backfill) g1=1
Partial load factor (v.surcharge) g2=0

Forces and moments on wall - ULS load combination 1

Stem design moment MEd1=g4*M1+g5*M2=25633 kNm/m
Horizontal shear at base of stem VEd1=g4*Ph+g5*Psh=2916.7 kN/m

Bearing pressures - ULS load combination 1

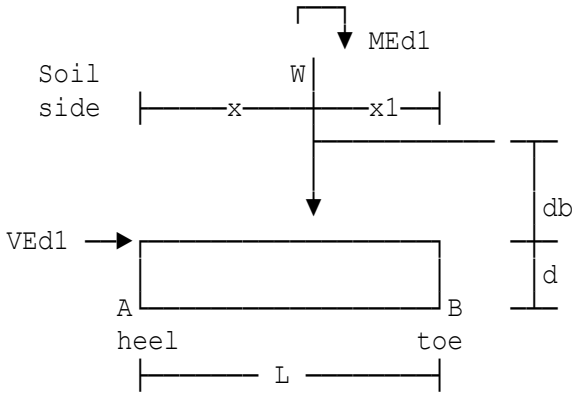

Centroid of load lies within middle third. Pressure varies from pa1 at A to pb1 at B.

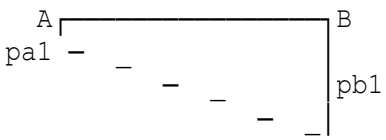

Maximum pressure is at B pmax1=pb1=921.03 kN/m²

Shear forces and bending moments on base - ULS load combination 1

```
Total S.F. on toe (plus is up)    Swb=((pwb+pb1)/2-den*d)*(x1-t/2)-wf1
                                     =3430.6 kN/m
Total S.F. on heel (plus is up)   Swa=Sau-Sad=-904.01 kN/m
Total B.M. on toe (plus is up)    Mwb=(2*pb1+pwb)*(x1-t/2)^2/6-Mbd
                                     =7482.1 kNm/m
Total B.M. on heel (plus is up)   Mwa=(2*pa1+pwa)*(x-t/2)^2/6-Mad
                                     =-15300 kNm/m
```

Resistance to sliding - ULS (load combinations 1 & 2)

```
Combination 1:
Sliding force                     SFor=St1'=3818.1 kN
Friction plus passive resistance  SRes=F+R=4816.8 kN
Thus the criterion for sliding is satisfied.

Combination 2:
Coefficient of passive pressure   Kp'=2.9117
Sliding force                     SFor=Ka2/Ka*(g7*P1+g8*P2)=3443 kN
Friction plus passive resistance  SRes=F+R=4729.2 kN
Thus the criterion for sliding is satisfied.
```

Resistance to overturning - ULS (load combinations 1 & 2)

```
Combination 1:
Total restraining mt.(with Mrv)   Mr1=g9*(Mre+Mrw+Mrv)=111094 kNm/m
  ditto           (without Mrv)   Mr2=g9*(Mre+Mrw)=108771 kNm/m
Total overturning moment          Mot=Mt1+Mt2=25391 kNm/m

Combination 2:
Total restraining mt.(with Mrv)   Mr1=g9'*(Mre+Mrw+Mrv)=111094 kNm/m
  ditto           (without Mrv)   Mr2=g9'*(Mre+Mrw)=108771 kNm/m
Total overturning moment          Mot=Mt1+Mt2=26128 kNm/m
```

Partial factors - ULS load combination 2

Forces and moments on wall - ULS load combination 2

```
Stem design moment                MEd2=g4*M1+g5*M2=20347 kNm/m
Horizontal shear at base of stem  VEd2=g4*Ph+g5*Psh=2284.1 kN/m
```

Bearing pressures - ULS load combination 2

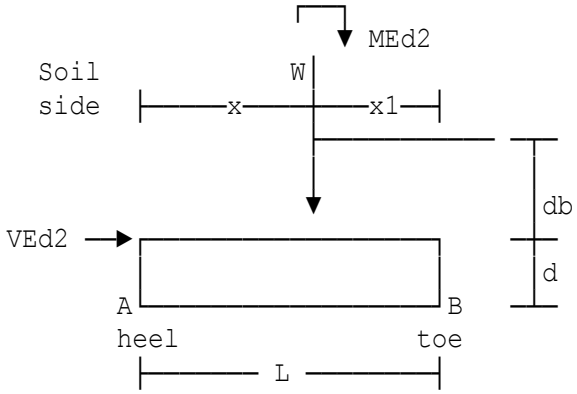

$$Ka2 = \frac{1-SIN(RAD(phid'1))}{1+SIN(RAD(phid'1))}$$

Centroid of load lies within middle third. Pressure varies from pa2 at A to pb2 at B.

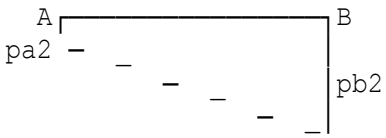

Maximum pressure is at B pmax2=pb2=802.35 kN/m²

Shear forces and bending moments on base - ULS load combination 2

Total S.F. on toe (plus is up)	Swb2=((pwb+pb2)/2-den*d)*(x1-t/2) -wf2=2987.3 kN/m
Total S.F. on heel (plus is up)	Swa2=Sau-Sad=-1354 kN/m
Total B.M. on toe (plus is up)	Mwb2=(2*pb2+pwb)*(x1-t/2)^2/6-Mbd =6496.9 kNm/m
Total B.M. on heel (plus is up)	Mwa2=(2*pa2+pwa)*(x-t/2)^2/6-Mad =-16875 kNm/m

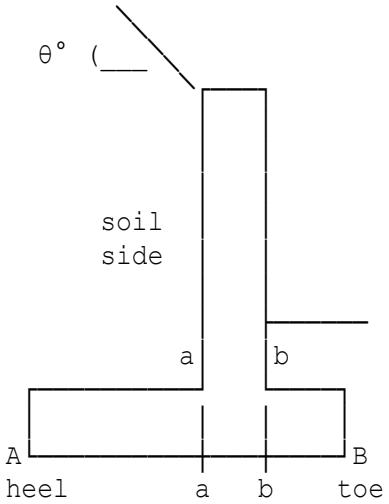

Design Summary - ULS load combinations 1 & 2 to EC7

Moment at base of stem	25633 kNm
Shear at base of stem	2916.7 kN
Moment at b-b (toe)	7482.1 kNm
Shear at b-b (toe)	3430.6 kN
Moment at a-a (heel)	-16875 kNm
Shear at a-a (heel)	-1354 kN

Pressures under base - SLS

Pressure @ A	611.33 kN/m²
Pressure @ B	686.48 kN/m²
Allowable GBP	700 kN/m²

NOTE: The sliding resistance calculation check assumes that a a heel beam/key will be provided to the underside of base.

Location: Ex3 - Cohesive soil, triangular soil pressure dist.

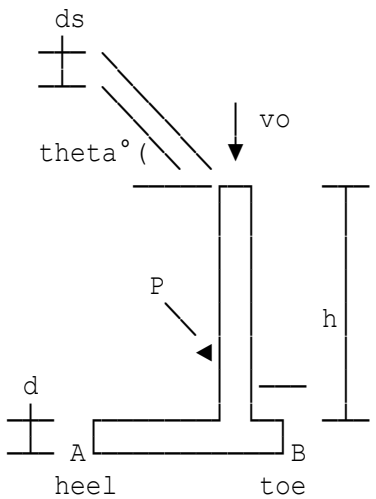

Reinforced concrete retaining wall to EC7

Using either Rankine or Coulomb theory, the following assumptions are made:

- the surface of rupture is assumed to be plane
- point of resultant pressure P on back of wall is at one third of the distance up from the base of the wall.

Weight/unit vol.of retained soil	w=20 kN/m³
Wall height	h=6 m
Pressure due to surcharge	press=50 kN/m²
Load above wall supported on stem	vo=0 kN/m
Angle of slope of soil (if any)	theta=-10°
Angle of wall-to-soil friction δ	delta=23.333°
Undrained shear strength	Cu=50 kN/m²
Thickness of wall	t=0.4 m
Base thickness	d=0.4 m
Density of wall (stem)	den=25 kN/m³

Forces and moments on wall - SLS

compute	M1=Ph*(d/2+h/3)=161.18 kNm/m
compute	M2=Psh*(d/2+h/2)=238.87 kNm/m
Maximum stem bending moment	M=M1+M2=400.06 kNm/m
Horizontal shear at base of stem	V=Ph+Psh=147.91 kN/m

Check bearing pressures - SLS

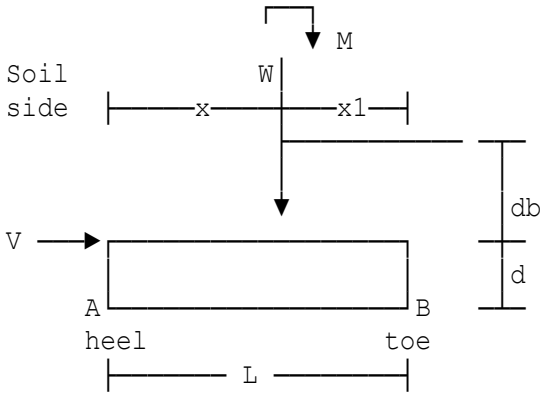

Length of base	L=5.25 m
Distance from A to centre of stem	x=0.2 m
Depth of soil over base at toe	db=2 m
Depth of soil for passive resist.	dp=4 m

Allowable ground pressure p=500 kN/m²
Centroid of load lies within middle third. Pressure varies from pa at A to pb at B.

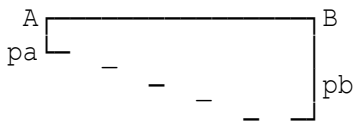

Maximum pressure is at B pmax=pb=102.17 kN/m²
As pmax ≤ p (102.17 kN/m² ≤ 500 kN/m²), the pressure beneath base is within the specified limit.

Partial factors - ULS load combination 1

Partial load factor (backfill) g1=1
Partial load factor (v.surcharge) g2=0

Forces and moments on wall - ULS load combination 1

Stem design moment MEd1=g4*M1+g5*M2=575.91 kNm/m
Horizontal shear at base of stem VEd1=g4*Ph+g5*Psh=210.88 kN/m

Bearing pressures - ULS load combination 1

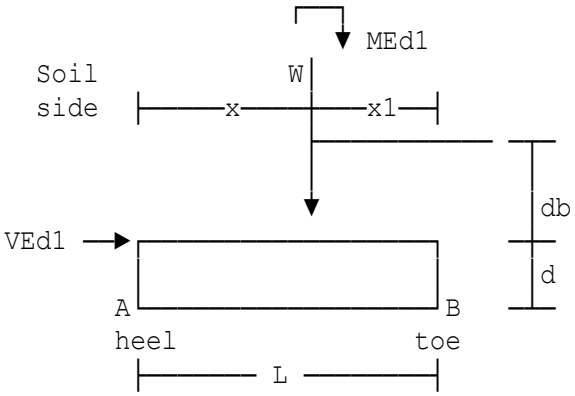

Centroid of load lies within middle third. Pressure varies from pa1 at A to pb1 at B.

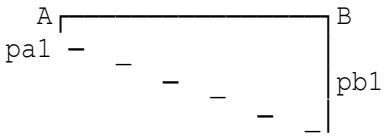

Maximum pressure is at B pmax1=pb1=128.4 kN/m²

Shear forces and bending moments on base - ULS load combination 1

```
Total S.F. on toe (plus is up)    Swb=((pwb+pb1)/2-den*d)*(x1-t/2)-wf1
                                     =184.89 kN/m
Total S.F. on heel (plus is up)   Swa=Sau-Sad=0 kN/m
Total B.M. on toe (plus is up)    Mwb=(2*pb1+pwb)*(x1-t/2)^2/6-Mbd
                                     =606.26 kNm/m
Total B.M. on heel (plus is up)   Mwa=(2*pa1+pwa)*(x-t/2)^2/6-Mad
                                     =0 kNm/m
```

Resistance to sliding - ULS (load combinations 1 & 2)

```
Combination 1:
Sliding force                     SFor=St1'=502.46 kN
Cohesion plus passive resistance  SRes=F+R=829.84 kN
Thus the criterion for sliding is satisfied.

Combination 2:
Coefficient of passive pressure   Kp'=2.9117
Sliding force                     SFor=Ka2/Ka*(g7*P1+g8*P2)=616.38 kN
Cohesion plus passive resistance  SRes=F+R=653.37 kN
Thus the criterion for sliding is satisfied.
```

Resistance to overturning - ULS (load combinations 1 & 2)

```
Combination 1:
Total restraining mt.(with Mrv)   Mr1=g9*(Mre+Mrw+Mrv)=987.45 kNm/m
  ditto           (without Mrv)   Mr2=g9*(Mre+Mrw)=820.14 kNm/m
Total overturning moment          Mot=Mt1+Mt2=574.84 kNm/m

Combination 2:
Total restraining mt.(with Mrv)   Mr1=g9'*(Mre+Mrw+Mrv)=987.45 kNm/m
  ditto           (without Mrv)   Mr2=g9'*(Mre+Mrw)=820.14 kNm/m
Total overturning moment          Mot=Mt1+Mt2=784.64 kNm/m
```

Partial factors - ULS load combination 2

Forces and moments on wall - ULS load combination 2

```
Stem design moment                MEd2=g4*M1+g5*M2=471.72 kNm/m
Horizontal shear at base of stem  VEd2=g4*Ph+g5*Psh=170.31 kN/m
```

Bearing pressures - ULS load combination 2

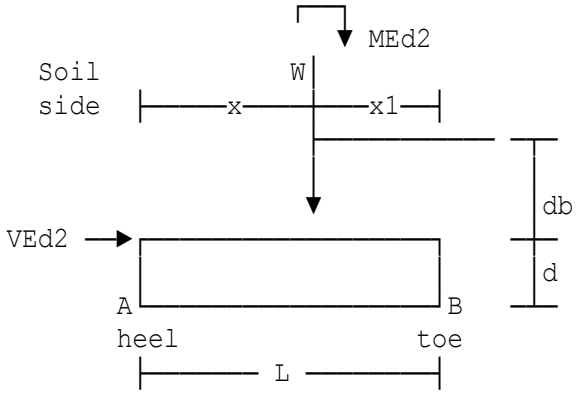

$$Ka2 = \frac{1-SIN(RAD(phid'1))}{1+SIN(RAD(phid'1))}$$

Centroid of load lies within middle third. Pressure varies from pa2 at A to pb2 at B.

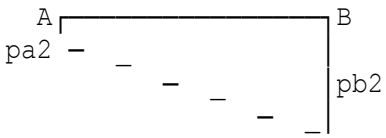

Maximum pressure is at B pmax2=pb2=143.15 kN/m²

Shear forces and bending moments on base - ULS load combination 2

Total S.F. on toe (plus is up)	Swb2=((pwb+pb2)/2-den*d)*(x1-t/2) -wf2=167.09 kN/m
Total S.F. on heel (plus is up)	Swa2=Sau-Sad=0 kN/m
Total B.M. on toe (plus is up)	Mwb2=(2*pb2+pwb)*(x1-t/2)^2/6-Mbd =635.33 kNm/m
Total B.M. on heel (plus is up)	Mwa2=(2*pa2+pwa)*(x-t/2)^2/6-Mad =0 kNm/m

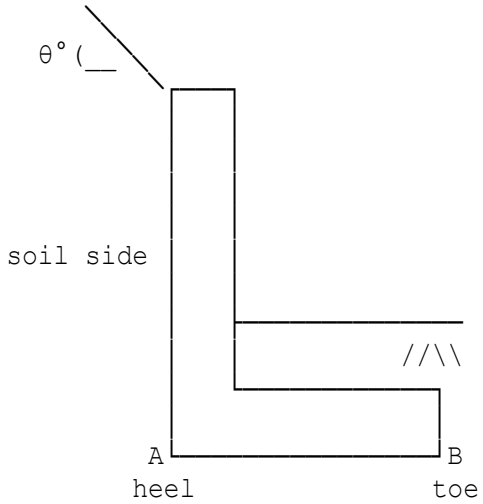

Design Summary - ULS load combinations 1 & 2 to EC7

Moment at stem base	575.91 kNm
Shear at stem base	210.88 kN
Moment on toe	635.33 kNm
Shear on toe	184.89 kN

Pressures under base - SLS

Pressure @ A	41.166 kN/m²
Pressure @ B	102.17 kN/m²
Allowable GBP	500 kN/m²

NOTE: The sliding resistance calculation check assumes that a a heel beam/key will be provided to the underside of base.

Location: Ex4 - Ex 10.6 of 'Reinforced Concrete Design' by B Mosley

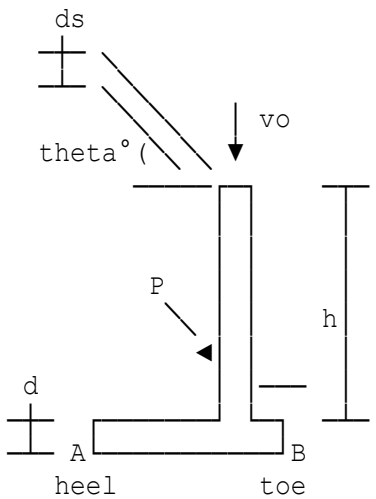

Reinforced concrete retaining wall to EC7

Using either Rankine or Coulomb theory, the following assumptions are made:

- the surface of rupture is assumed to be plane
- point of resultant pressure P on back of wall is at one third of the distance up from the base of the wall.

Weight/unit vol.of retained soil	w=17 kN/m³
Wall height	h=4.5 m
Pressure due to surcharge	press=5 kN/m²
Load above wall supported on stem	vo=0 kN/m
Angle of slope of soil (if any)	theta=0°
Angle of wall-to-soil friction δ	delta=0°
Friction factor @ underside base	fb=0.5
Thickness of wall	t=0.315 m
Base thickness	d=0.4 m
Density of wall (stem)	den=25 kN/m³

Forces and moments on wall - SLS

compute	M1=Ph*(d/2+h/3)=97.537 kNm/m
compute	M2=Psh*(d/2+h/2)=18.375 kNm/m
Maximum stem bending moment	M=M1+M2=115.91 kNm/m
Horizontal shear at base of stem	V=Ph+Psh=64.874 kN/m

Check bearing pressures - SLS

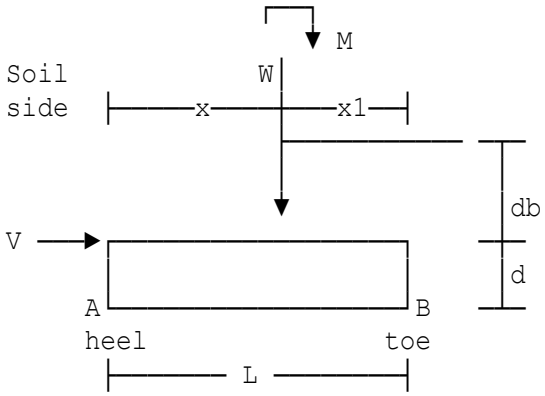

Length of base	L=3.4 m
Distance from A to centre of stem	x=2.4 m
Depth of soil over base at toe	db=0 m
Depth of soil for passive resist.	dp=0.6 m

Allowable ground pressure p=500 kN/m²
Centroid of load lies within middle third. Pressure varies from pa at A to pb at B.

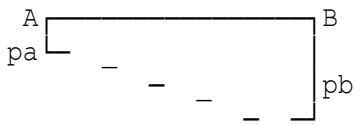

Maximum pressure is at B pmax=pb=100.21 kN/m²
As pmax ≤ p (100.21 kN/m² ≤ 500 kN/m²), the pressure beneath base is within the specified limit.

Partial factors - ULS load combination 1

Partial load factor (backfill) g1=1
Partial load factor (v.surcharge) g2=0

Forces and moments on wall - ULS load combination 1

Stem design moment MEd1=g4*M1+g5*M2=159.24 kNm/m
Horizontal shear at base of stem VEd1=g4*Ph+g5*Psh=88.705 kN/m

Bearing pressures - ULS load combination 1

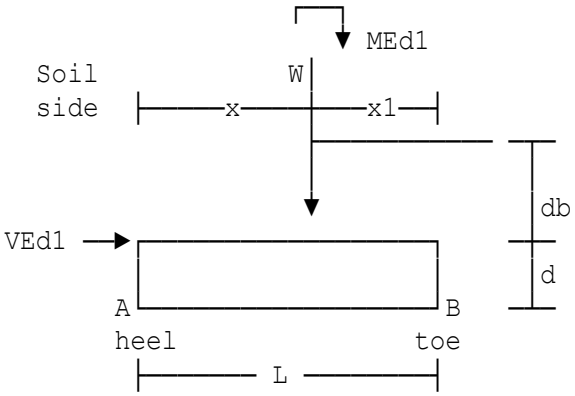

Centroid of load lies within middle third. Pressure varies from pa1 at A to pb1 at B.

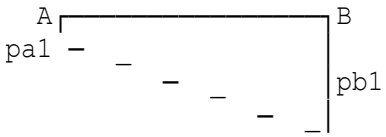

Maximum pressure is at B pmax1=pb1=137.31 kN/m²

Shear forces and bending moments on base - ULS load combination 1

```
Total S.F. on toe (plus is up)    Swb=((pwb+pb1)/2-den*d)*(x1-t/2)-wf1
                                     =94.882 kN/m
Total S.F. on heel (plus is up)   Swa=Sau-Sad=-64.259 kN/m
Total B.M. on toe (plus is up)    Mwb=(2*pb1+pwb)*(x1-t/2)^2/6-Mbd
                                     =41.707 kNm/m
Total B.M. on heel (plus is up)   Mwa=(2*pa1+pwa)*(x-t/2)^2/6-Mad
                                     =-104.82 kNm/m
```

Resistance to sliding - ULS (load combinations 1 & 2)

```
Combination 1:
Sliding force                     SFor=St1'=112.24 kN
Friction plus passive resistance  SRes=F+R=129.67 kN
Thus the criterion for sliding is satisfied.

Combination 2:
Coefficient of passive pressure   Kp'=2.4442
Sliding force                     SFor=Ka2/Ka*(g7*P1+g8*P2)=104.02 kN
Friction plus passive resistance  SRes=F+R=127.97 kN
Thus the criterion for sliding is satisfied.
```

Resistance to overturning - ULS (load combinations 1 & 2)

```
Combination 1:
Total restraining mt.(with Mrv)   Mr1=g9*(Mre+Mrw+Mrv)=435.74 kNm/m
  ditto           (without Mrv)   Mr2=g9*(Mre+Mrw)=435.74 kNm/m
Total overturning moment          Mot=Mt1+Mt2=152.24 kNm/m

Combination 2:
Total restraining mt.(with Mrv)   Mr1=g9'*(Mre+Mrw+Mrv)=435.74 kNm/m
  ditto           (without Mrv)   Mr2=g9'*(Mre+Mrw)=435.74 kNm/m
Total overturning moment          Mot=Mt1+Mt2=168.3 kNm/m
```

Partial factors - ULS load combination 2

Forces and moments on wall - ULS load combination 2

```
Stem design moment                MEd2=g4*M1+g5*M2=121.42 kNm/m
Horizontal shear at base of stem  VEd2=g4*Ph+g5*Psh=67.124 kN/m
```

Bearing pressures - ULS load combination 2

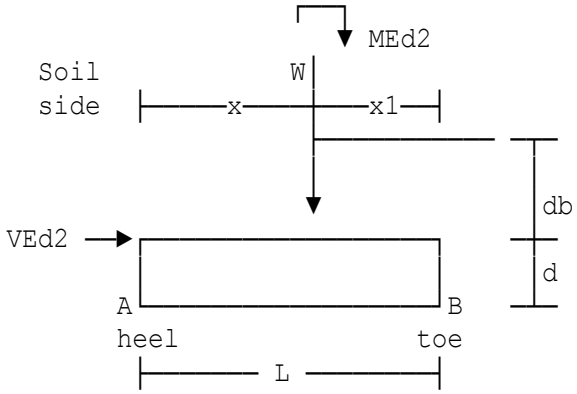

$$Ka2 = \frac{1-SIN(RAD(phid'1))}{1+SIN(RAD(phid'1))}$$

Centroid of load lies within middle third. Pressure varies from pa2 at A to pb2 at B.

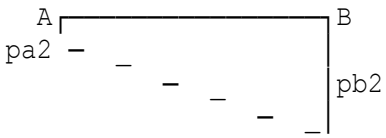

Maximum pressure is at B pmax2=pb2=119.58 kN/m²

Shear forces and bending moments on base - ULS load combination 2

Total S.F. on toe (plus is up)	Swb2=((pwb+pb2)/2-den*d)*(x1-t/2) -wf2=82.152 kN/m
Total S.F. on heel (plus is up)	Swa2=Sau-Sad=-72.208 kN/m
Total B.M. on toe (plus is up)	Mwb2=(2*pb2+pwb)*(x1-t/2)^2/6-Mbd =36.034 kNm/m
Total B.M. on heel (plus is up)	Mwa2=(2*pa2+pwa)*(x-t/2)^2/6-Mad =-107.88 kNm/m

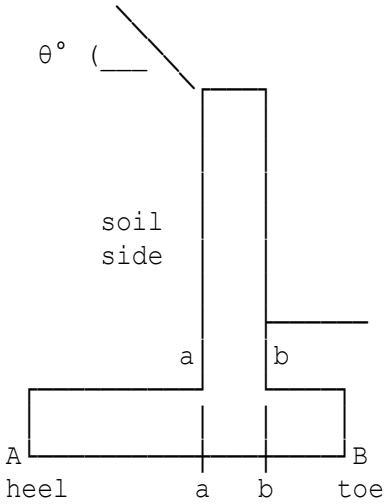

Design Summary - ULS load combinations 1 & 2 to EC7

Moment at base of stem	159.24 kNm
Shear at base of stem	88.705 kN
Moment at b-b (toe)	41.707 kNm
Shear at b-b (toe)	94.882 kN
Moment at a-a (heel)	-107.88 kNm
Shear at a-a (heel)	-72.208 kN

Pressures under base - SLS

Pressure @ A	48.146 kN/m²
Pressure @ B	100.21 kN/m²
Allowable GBP	500 kN/m²

NOTE: The sliding resistance calculation check assumes that a a heel beam/key will be provided to the underside of base.

Location: Ex5 - Chapter 36 page 393 Charles E Reynolds

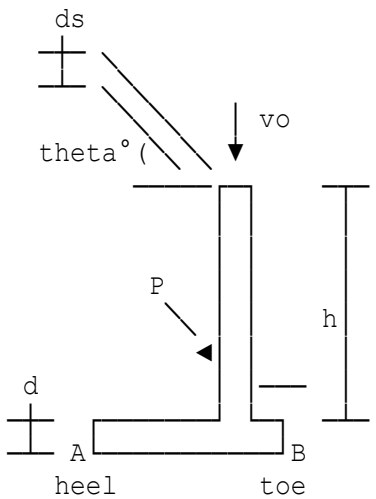

Reinforced concrete retaining wall to EC7

Using either Rankine or Coulomb theory, the following assumptions are made:

- the surface of rupture is assumed to be plane
- point of resultant pressure P on back of wall is at one third of the distance up from the base of the wall.

Weight/unit vol.of retained soil	w=20 kN/m³
Wall height	h=3.5 m
Pressure due to surcharge	press=5 kN/m²
Load above wall supported on stem	vo=0 kN/m
Angle of slope of soil (if any)	theta=0°
Angle of wall-to-soil friction δ	delta=0°
Undrained shear strength	Cu=50 kN/m²
Thickness of wall	t=0.4 m
Base thickness	d=0.4 m
Density of wall (stem)	den=25 kN/m³

Forces and moments on wall - SLS

compute	M1=Ph*(d/2+h/3)=45.368 kNm/m
compute	M2=Psh*(d/2+h/2)=9.2475 kNm/m
Maximum stem bending moment	M=M1+M2=54.616 kNm/m
Horizontal shear at base of stem	V=Ph+Psh=37.939 kN/m

Check bearing pressures - SLS

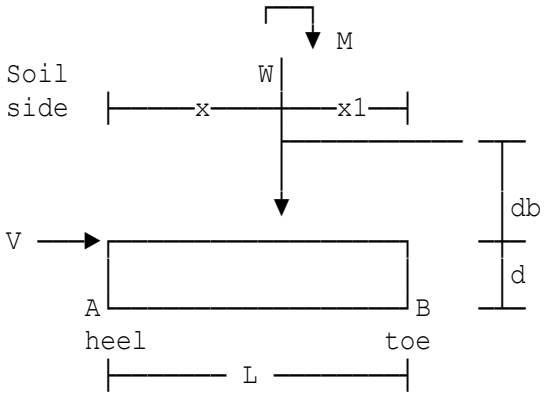

Length of base	L=3 m
Distance from A to centre of stem	x=2 m
Depth of soil over base at toe	db=0 m
Depth of soil for passive resist.	dp=0.9 m

Allowable ground pressure p=150 kN/m²
Centroid of load lies within middle third. Pressure varies from pa at A to pb at B.

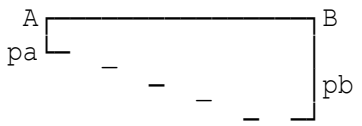

Maximum pressure is at B pmax=pb=66.925 kN/m²
As pmax ≤ p (66.925 kN/m² ≤ 150 kN/m²), the pressure beneath base is within the specified limit.

Partial factors - ULS load combination 1

Partial load factor (backfill) g1=1
Partial load factor (v.surcharge) g2=0

Forces and moments on wall - ULS load combination 1

Stem design moment MEd1=g4*M1+g5*M2=75.118 kNm/m
Horizontal shear at base of stem VEd1=g4*Ph+g5*Psh=51.928 kN/m

Bearing pressures - ULS load combination 1

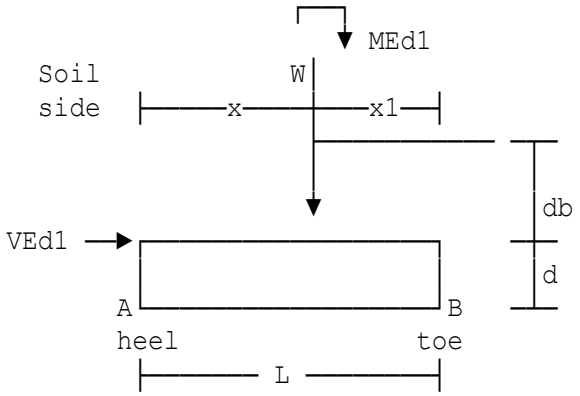

Centroid of load lies within middle third. Pressure varies from pa1 at A to pb1 at B.

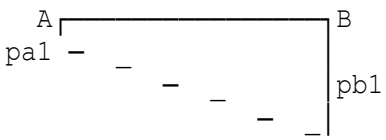

Maximum pressure is at B pmax1=pb1=95.129 kN/m²

Shear forces and bending moments on base - ULS load combination 1

```
Total S.F. on toe (plus is up)    Swb=((pwb+pb1)/2-den*d)*(x1-t/2)-wf1
                                     =63.009 kN/m
Total S.F. on heel (plus is up)   Swa=Sau-Sad=-32.943 kN/m
Total B.M. on toe (plus is up)    Mwb=(2*pb1+pwb)*(x1-t/2)^2/6-Mbd
                                     =25.883 kNm/m
Total B.M. on heel (plus is up)   Mwa=(2*pa1+pwa)*(x-t/2)^2/6-Mad
                                     =-37.385 kNm/m
```

Resistance to sliding - ULS (load combinations 1 & 2)

```
Combination 1:
Sliding force                     SFor=St1'=79.769 kN
Cohesion plus passive resistance  SRes=F+R=109.02 kN
Thus the criterion for sliding is satisfied.

Combination 2:
Coefficient of passive pressure   Kp'=2.0747
Sliding force                     SFor=Ka2/Ka*(g7*P1+g8*P2)=76.312 kN
Cohesion plus passive resistance  SRes=F+R=88.058 kN
Thus the criterion for sliding is satisfied.
```

Resistance to overturning - ULS (load combinations 1 & 2)

```
Combination 1:
Total restraining mt.(with Mrv)   Mr1=g9*(Mre+Mrw+Mrv)=310.14 kNm/m
  ditto           (without Mrv)   Mr2=g9*(Mre+Mrw)=310.14 kNm/m
Total overturning moment          Mot=Mt1+Mt2=74.398 kNm/m

Combination 2:
Total restraining mt.(with Mrv)   Mr1=g9'*(Mre+Mrw+Mrv)=310.14 kNm/m
  ditto           (without Mrv)   Mr2=g9'*(Mre+Mrw)=310.14 kNm/m
Total overturning moment          Mot=Mt1+Mt2=84.885 kNm/m
```

Partial factors - ULS load combination 2

Forces and moments on wall - ULS load combination 2

```
Stem design moment                MEd2=g4*M1+g5*M2=57.39 kNm/m
Horizontal shear at base of stem  VEd2=g4*Ph+g5*Psh=39.361 kN/m
```

Bearing pressures - ULS load combination 2

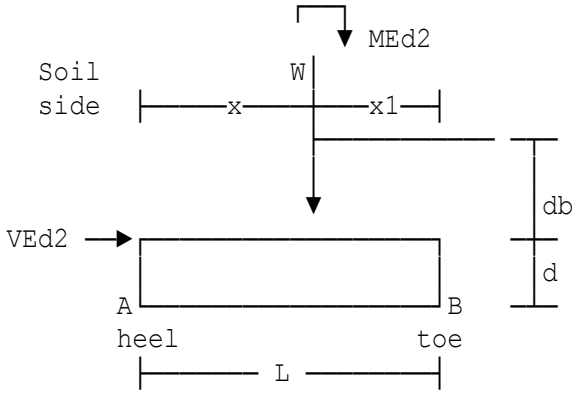

$$Ka2 = \frac{1-SIN(RAD(phid'1))}{1+SIN(RAD(phid'1))}$$

Centroid of load lies within middle third. Pressure varies from pa2 at A to pb2 at B.

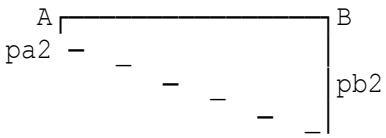

Maximum pressure is at B pmax2=pb2=81.524 kN/m²

Shear forces and bending moments on base - ULS load combination 2

Total S.F. on toe (plus is up)	Swb2=((pwb+pb2)/2-den*d)*(x1-t/2) -wf2=53.409 kN/m
Total S.F. on heel (plus is up)	Swa2=Sau-Sad=-42.257 kN/m
Total B.M. on toe (plus is up)	Mwb2=(2*pb2+pwb)*(x1-t/2)^2/6-Mbd =21.872 kNm/m
Total B.M. on heel (plus is up)	Mwa2=(2*pa2+pwa)*(x-t/2)^2/6-Mad =-43.817 kNm/m

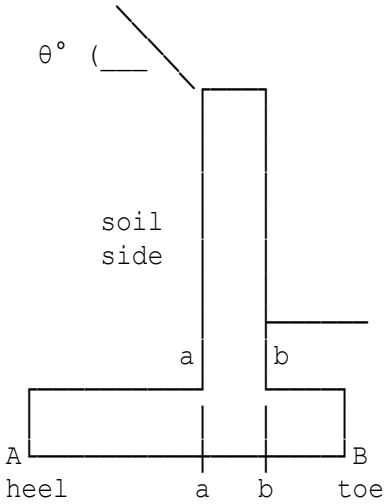

Design Summary - ULS load combinations 1 & 2 to EC7

Moment at base of stem	75.118 kNm
Shear at base of stem	51.928 kN
Moment at b-b (toe)	25.883 kNm
Shear at b-b (toe)	63.009 kN
Moment at a-a (heel)	-43.817 kNm
Shear at a-a (heel)	-42.257 kN

Pressures under base - SLS

Pressure @ A	66.409 kN/m²
Pressure @ B	66.925 kN/m²
Allowable GBP	150 kN/m²

NOTE: The sliding resistance calculation check assumes that a a heel beam/key will be provided to the underside of base.

Location: Ex6 - Ex from 'The Structural Engineer' Jan 2014 Vol.92

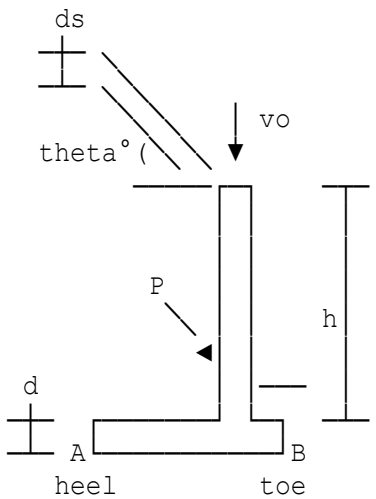

Reinforced concrete retaining wall to EC7

Using either Rankine or Coulomb theory, the following assumptions are made:

- the surface of rupture is assumed to be plane
- point of resultant pressure P on back of wall is at one third of the distance up from the base of the wall.

Weight/unit vol.of retained soil	w=18 kN/m³
Wall height	h=5 m
Pressure due to surcharge	press=10 kN/m²
Load above wall supported on stem	vo=0 kN/m
Angle of slope of soil (if any)	theta=0°
Angle of wall-to-soil friction δ	delta=0°
Friction factor @ underside base	fb=0.455
Thickness of wall	t=0.45 m
Base thickness	d=0.45 m
Density of wall (stem)	den=25 kN/m³

Forces and moments on wall - SLS

compute	M1=Ph*(d/2+h/3)=141.87 kNm/m
compute	M2=Psh*(d/2+h/2)=45.417 kNm/m
Maximum stem bending moment	M=M1+M2=187.29 kNm/m
Horizontal shear at base of stem	V=Ph+Psh=91.666 kN/m

Check bearing pressures - SLS

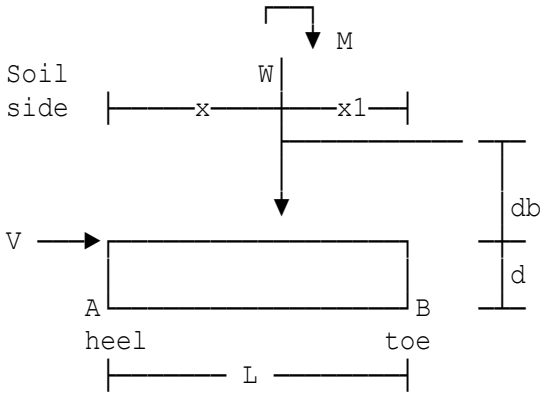

Length of base	L=4 m
Distance from A to centre of stem	x=3.225 m
Depth of soil over base at toe	db=0 m
Depth of soil for passive resist.	dp=0.55 m

Allowable ground pressure p=250 kN/m²
Centroid of load lies within middle third. Pressure varies from pa at A to pb at B.

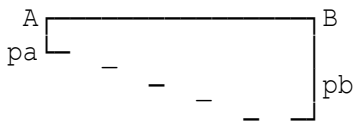

Maximum pressure is at B pmax=pb=149.17 kN/m²
As pmax ≤ p (149.17 kN/m² ≤ 250 kN/m²), the pressure beneath base is within the specified limit.

Partial factors - ULS load combination 1

Partial load factor (backfill) g1=1
Partial load factor (v.surcharge) g2=0

Forces and moments on wall - ULS load combination 1

Stem design moment MEd1=g4*M1+g5*M2=259.65 kNm/m
Horizontal shear at base of stem VEd1=g4*Ph+g5*Psh=126.25 kN/m

Bearing pressures - ULS load combination 1

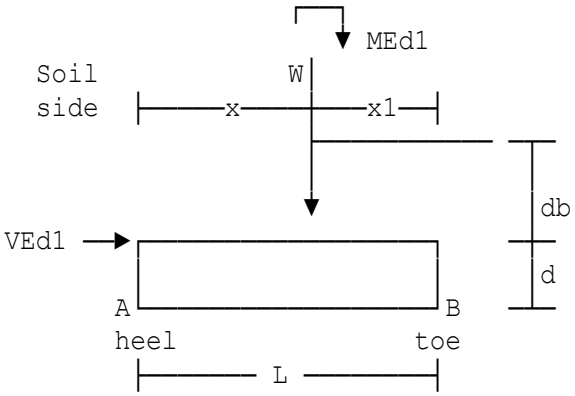

Centroid of load lies within middle third. Pressure varies from pa1 at A to pb1 at B.

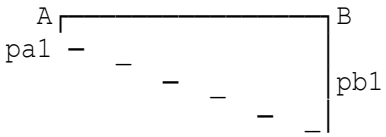

Maximum pressure is at B pmax1=pb1=195.73 kN/m²

Shear forces and bending moments on base - ULS load combination 1

```
Total S.F. on toe (plus is up)    Swb=((pwb+pb1)/2-den*d)*(x1-t/2)-wf1
                                     =94.349 kN/m
Total S.F. on heel (plus is up)   Swa=Sau-Sad=-69.276 kN/m
Total B.M. on toe (plus is up)    Mwb=(2*pb1+pwb)*(x1-t/2)^2/6-Mbd
                                     =26.598 kNm/m
Total B.M. on heel (plus is up)   Mwa=(2*pa1+pwa)*(x-t/2)^2/6-Mad
                                     =-209.73 kNm/m
```

Resistance to sliding - ULS (load combinations 1 & 2)

```
Combination 1:
Sliding force                     SFor=St1'=152.5 kN
Friction plus passive resistance  SRes=F+R=177.09 kN
Thus the criterion for sliding is satisfied.

Combination 2:
Coefficient of passive pressure   Kp'=2.4442
Sliding force                     SFor=Ka2/Ka*(g7*P1+g8*P2)=142.94 kN
Friction plus passive resistance  SRes=F+R=175.57 kN
Thus the criterion for sliding is satisfied.
```

Resistance to overturning - ULS (load combinations 1 & 2)

```
Combination 1:
Total restraining mt.(with Mrv)   Mr1=g9*(Mre+Mrw+Mrv)=727.73 kNm/m
  ditto           (without Mrv)   Mr2=g9*(Mre+Mrw)=727.73 kNm/m
Total overturning moment          Mot=Mt1+Mt2=252.32 kNm/m

Combination 2:
Total restraining mt.(with Mrv)   Mr1=g9'*(Mre+Mrw+Mrv)=727.73 kNm/m
  ditto           (without Mrv)   Mr2=g9'*(Mre+Mrw)=727.73 kNm/m
Total overturning moment          Mot=Mt1+Mt2=277.68 kNm/m
```

Partial factors - ULS load combination 2

Forces and moments on wall - ULS load combination 2

```
Stem design moment                MEd2=g4*M1+g5*M2=200.92 kNm/m
Horizontal shear at base of stem  VEd2=g4*Ph+g5*Psh=96.666 kN/m
```

Bearing pressures - ULS load combination 2

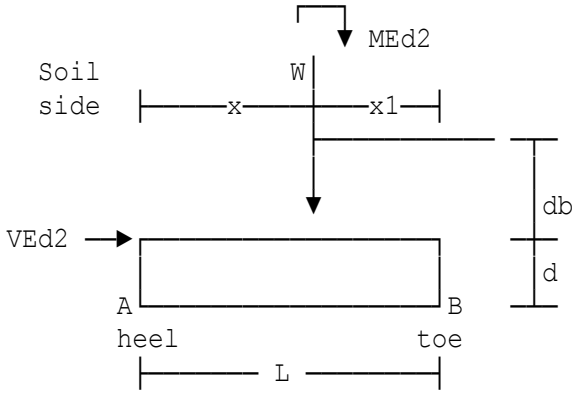

$$Ka2 = \frac{1-SIN(RAD(phid'1))}{1+SIN(RAD(phid'1))}$$

Centroid of load lies within middle third. Pressure varies from pa2 at A to pb2 at B.

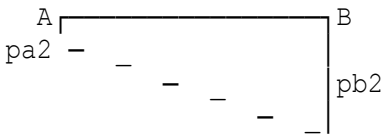

Maximum pressure is at B pmax2=pb2=172.16 kN/m²

Shear forces and bending moments on base - ULS load combination 2

Total S.F. on toe (plus is up)	Swb2=((pwb+pb2)/2-den*d)*(x1-t/2) -wf2=82.498 kN/m
Total S.F. on heel (plus is up)	Swa2=Sau-Sad=-84.82 kN/m
Total B.M. on toe (plus is up)	Mwb2=(2*pb2+pwb)*(x1-t/2)^2/6-Mbd =23.237 kNm/m
Total B.M. on heel (plus is up)	Mwa2=(2*pa2+pwa)*(x-t/2)^2/6-Mad =-216.49 kNm/m

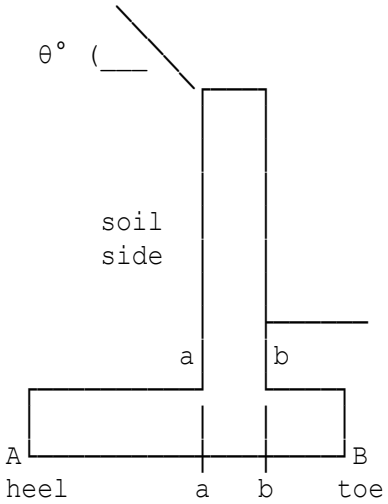

Design Summary - ULS load combinations 1 & 2 to EC7

Moment at base of stem	259.65 kNm
Shear at base of stem	126.25 kN
Moment at b-b (toe)	26.598 kNm
Shear at b-b (toe)	94.349 kN
Moment at a-a (heel)	-216.49 kNm
Shear at a-a (heel)	-84.82 kN

Pressures under base - SLS

Pressure @ A	51.455 kN/m²
Pressure @ B	149.17 kN/m²
Allowable GBP	250 kN/m²

NOTE: The sliding resistance calculation check assumes that a a heel beam/key will be provided to the underside of base.

Location: Ex7 - Mass concrete wall with no toe

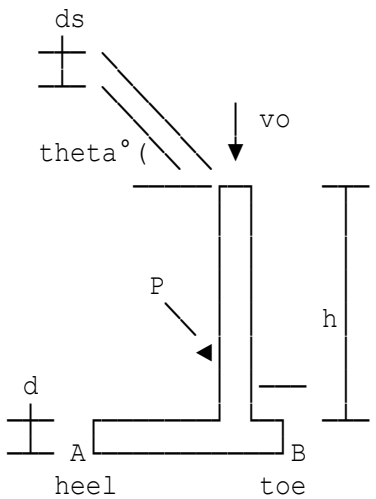

Reinforced concrete retaining wall to EC7

Using either Rankine or Coulomb theory, the following assumptions are made:

- the surface of rupture is assumed to be plane
- point of resultant pressure P on back of wall is at one third of the distance up from the base of the wall.

Weight/unit vol.of retained soil	w=18.8 kN/m³
Wall height above any toe provid.	h=1 m
Load above wall supported on stem	vo=0 kN/m
Angle of slope of soil (if any)	theta=0°
Angle of wall-to-soil friction δ	delta=0°
Friction factor @ underside base	fb=0.4
Thickness of wall	t=0.5 m
Thickness of toe (if provided)	d=0 m
Density of wall (stem)	den=25 kN/m³

Forces and moments on wall - SLS

compute	M1=Ph*(d/2+h/3)=1.0444 kNm/m
compute	M2=Psh*(d/2+h/2)=0 kNm/m
Maximum stem bending moment	M=M1+M2=1.0444 kNm/m
Horizontal shear at base of stem	V=Ph+Psh=3.1333 kN/m

Bearing pressures - SLS

Soil depth for passive resistance dp=0 m
Allowable ground pressure p=100 kN/m²
Centroid of load outside middle third giving triangular distribution of pressure.
Pressure varies from 0 at distance x from A to a maximum of pb at B.

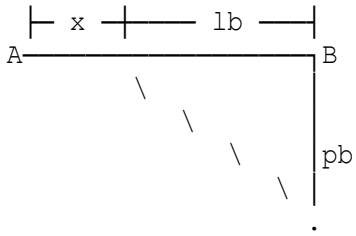

Maximum pressure is at B pmax=pb=50.067 kN/m²
As pmax ≤ p (50.067 kN/m² ≤ 100 kN/m²), the pressure beneath base is within the specified limit.

Partial factors - ULS load combination 1

Partial load factor (backfill) g1=1
Partial load factor (v.surcharge) g2=0

Forces and moments on wall - ULS load combination 1

Stem design moment MEd1=g4*M1+g5*M2=1.41 kNm/m
Horizontal shear at base of stem VEd1=g4*Ph+g5*Psh=4.23 kN/m

Bearing pressures - ULS load combination 1

Centroid of load outside middle third giving triangular distribution of pressure.
Pressure varies from 0 at distance x from A to a maximum of pb1 at B.

```
      ├─ x ─┼──── lb ────┤
    A──────────────────────┐B
            \              │
               \           │pb1
                  \        │
                     \     │
                        \  │
                           .
```

Maximum pressure is at B pmax1=pb1=67.59 kN/m²

Resistance to sliding - ULS (load combinations 1 & 2)

Combination 1:
Sliding force SFor=St1=4.23 kN
Frictional resistance SRes=F=5 kN
Thus the criterion for sliding is satisfied.

Combination 2:
Sliding force SFor=Ka2/Ka*(g7*Pabh1/g4+g8*Psbh1 /g5)=3.8458 kN
Frictional resistance SRes=F=5 kN
Thus the criterion for sliding is satisfied.

Resistance to overturning - ULS (load combinations 1 & 2)

Combination 1:
Total restraining mt.(with Mrv) Mr1=g9*(Mre+Mrw+Mrv)=2.8125 kNm/m
ditto (without Mrv) Mr2=g9*(Mre+Mrw)=2.8125 kNm/m
Total overturning moment Mot=Mt1+Mt2=1.1489 kNm/m

Combination 2:
Total restraining mt.(with Mrv) Mr1=g9'*(Mre+Mrw+Mrv)=2.8125 kNm/m
ditto (without Mrv) Mr2=g9'*(Mre+Mrw)=2.8125 kNm/m
Total overturning moment Mot=Mt1+Mt2=1.2819 kNm/m

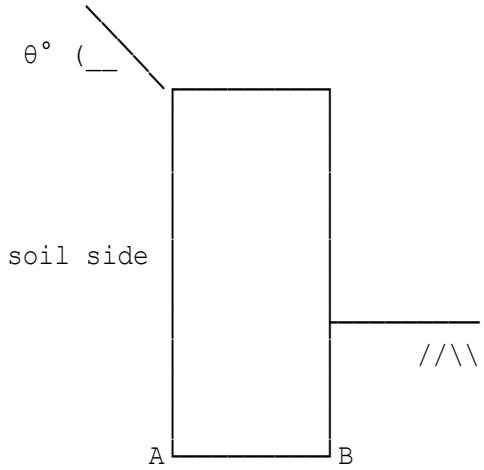

Design Summary - ULS load combinations 1 & 2 to EC7

Wall thickness	500 mm
Sliding force	4.23 kN
Sliding resistance	5 kN
Sliding force	3.8458 kN
Sliding resistance	5 kN

Pressures under base - SLS

Max pressure @ B	50.067 kN/m²
Allowable GBP	100 kN/m²

NOTE: Wall has no heel or toe and the total wall height h=1 m.

Location: Example 8.1 Basic Soil Mechanics by Roy Whitlow, 4th Edtn.

Active Pressure on a Retaining Wall to BS8002:1994 using Coulomb's "Wedge Theory" for cohesive and cohesionless soils

Water level is assumed to be below the base of the wall.
Angle of earth surface to horizontal theta=0°
Height of wall under consideration H=5.4 m

Forces on soil wedge

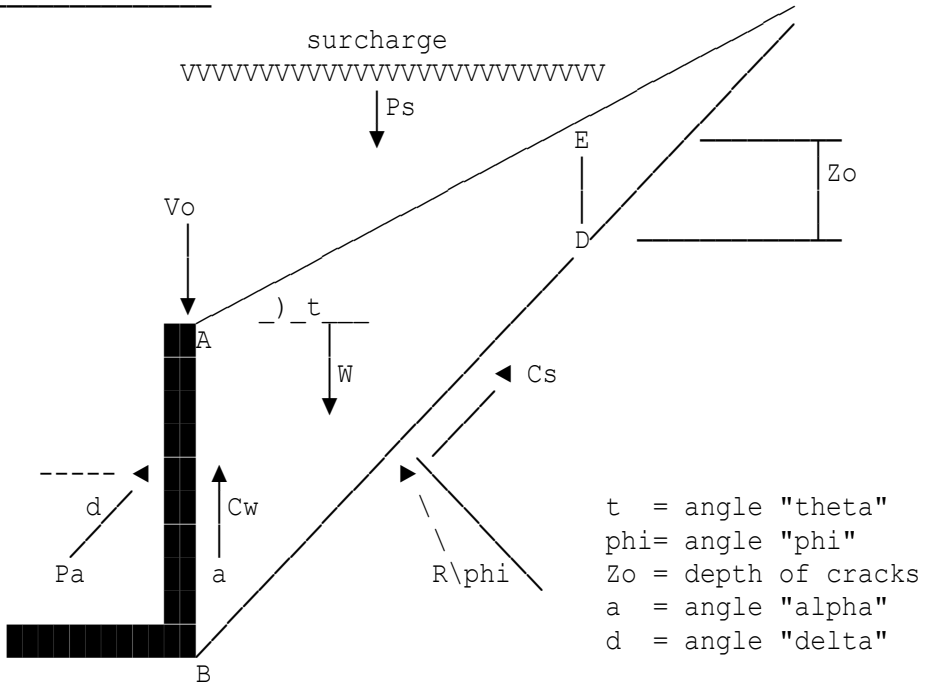

Surcharge load qs=0 kN/m²
Angle of internal friction φ phi=30°
Angle of friction between wall and soil delta=0°

Wedge theory will be adopted

Dry density of soil Ds=20 kN/m³
Cohesion of soil c=0 kN/m²
Coefficient of wall cohesion cw=0 kN/m²
Angle of shearing resistance φ phi=phi=30°
Coefficient of active soil pressure Ka=(TAN(RAD(45-phi/2)))^2=0.33333
K1=Ka=0.33333
Depth of tension cracks Zo=(2*c*K1^0.5-qs*Ka)/(Ds*Ka)=0 m
Horiz.force from water in tension cracks Pw=0 kN

num=W+Ps+Pw*TAN(RAD(ap))-Cw-Cs*COS(RAD(a))-Cs*SIN(RAD(a))
*TAN(RAD(ap))=168.36
den=SIN(RAD(d))+COS(RAD(d))*TAN(RAD(ap))=1.7321

Total active force Pa=num/den=97.2 kN

Summary of results derived from wedge theory

Horizontal component of active force hPa=Pa*COS(RAD(delta))=97.2 kN
Vertical component of active force vPa=Pa*SIN(RAD(delta))=0 kN

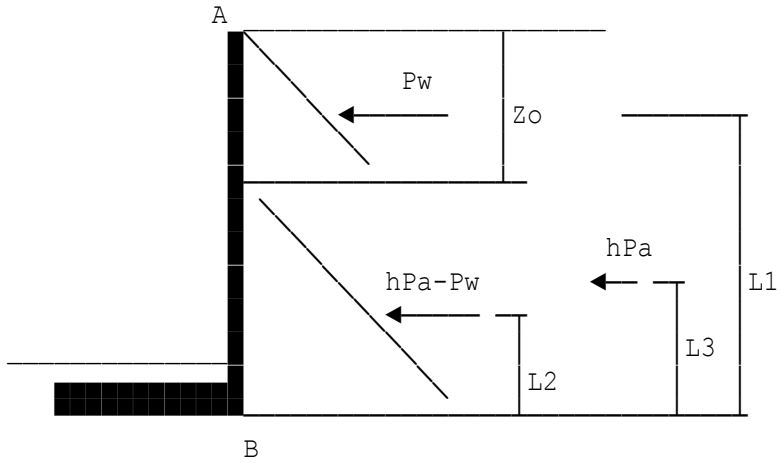

Distance L1=H-2*Zo/3=5.4 m
Distance L2=(H+qs/Ds-Zo)/3=1.8 m
Distance L3=(Pw*L1+(hPa-Pw)*L2)/hPa=1.8 m

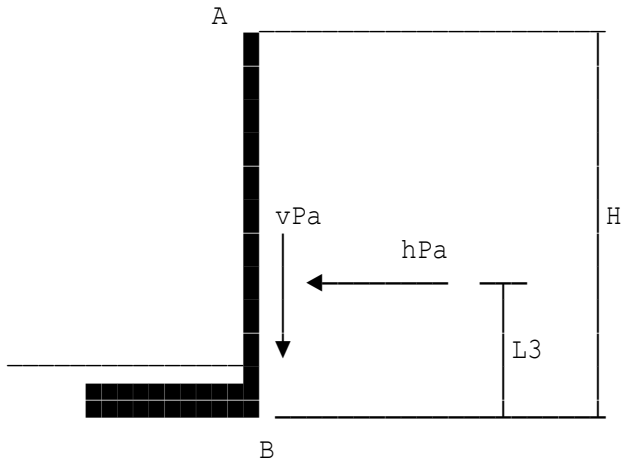

Diagram shows forces on wall due to active pressure

Location: Ex 6.1b of Soil Mechanics by RF Craig, 6th Edtn.

Active Pressure on a Retaining Wall to BS8002:1994 using Coulomb's "Wedge Theory" for cohesive and cohesionless soils

The angle of friction between wall and soil "delta" will be taken as zero as the soil at the top of the wall is assumed to be horizontal.

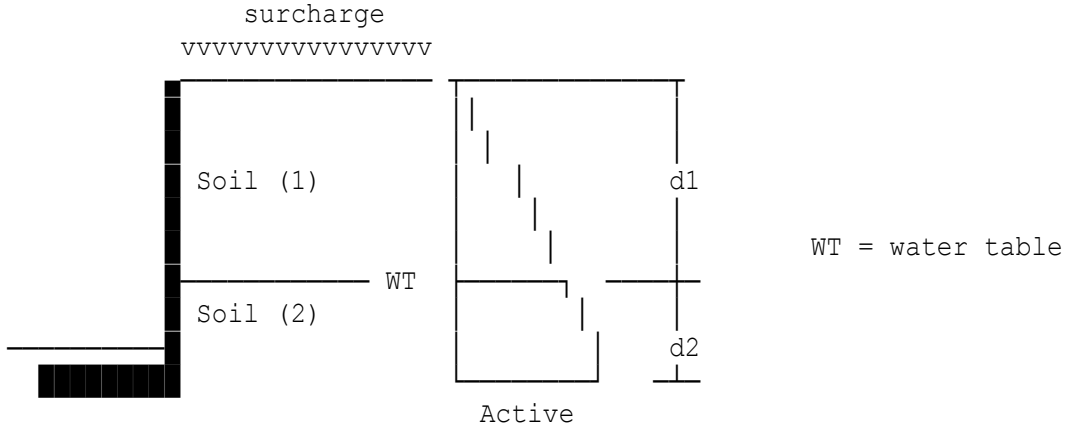

Soil 1

Surcharge pressure	q=0 kN/m²
Depth of soil (1)	d1=2 m
Cohesive strength of soil (1)	c1'=0 kN/m²
Coefficient of wall cohesion	cw1=0 kN/m²
Friction angle of soil (1)	phi1'=35°
Dry unit weight of soil (1)	gam1=17 kN/m³

Soil 2

Depth of soil (2)	d2=3 m
Cohesive strength of soil (2)	c2'=0 kN/m²
Coefficient of wall cohesion	cw2=0 kN/m²
Friction angle of soil (2)	phi2'=35°
Saturated unit weight soil (2)	gam2=20 kN/m³
For soil 1	Ka1=(1-SIN(RAD(phi1')))/(1 +SIN(RAD(phi1'))) =0.27099
For soil 2	Ka2=(1-SIN(RAD(phi2')))/(1 +SIN(RAD(phi2'))) =0.27099
Horiz.force from water in tension crack	Pw=0 kN
No tension crack will develop	Zo=0 m
Active forces on wall (soil 1)	P1=pat1*d1=0 kN
	P2=0.5*(pab1-pat1)*d1=9.2137 kN
Active forces on wall (soil 2)	P3=pat2*d2=27.641 kN
	P4=0.5*(pab2-pat2)*d2=56.571 kN

Active force from water in crack P5=Pw=0 kN

Point of application of total active pressure will be at
a distance "L3" from the bottom of the wall.

L3=(P1*L1+P2*L2+P3*L3+P4*L4+P5*L5)
/Pa=1.4109 m

Summary of results

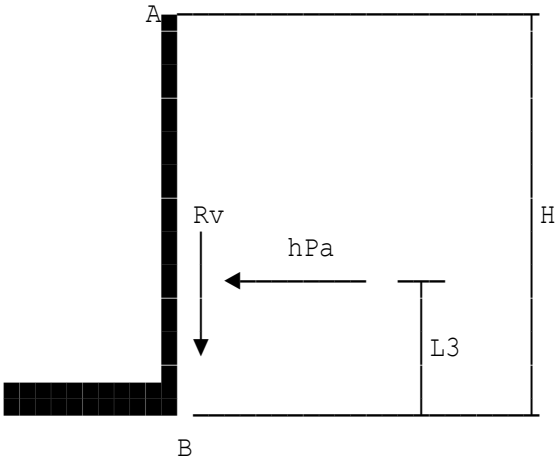

Diagram shows forces on wall and point of application

Horizontal component of active force	hPa=Pa=93.426 kN
Vertical component of active force	Rv=0 kN
Point of application of active force	L3=L3=1.4109 m

Location: Example 8.1 Basic Soil Mechanics by Roy Whitlow, 4th Edtn.

Active Pressure on a Retaining Wall to BS8002:1994 using Coulomb's "Wedge Theory" for cohesive and cohesionless soils

Water level is assumed to be below the base of the wall.
Angle of earth surface to horizontal theta=0°
Height of wall under consideration H=5.4 m

Forces on soil wedge

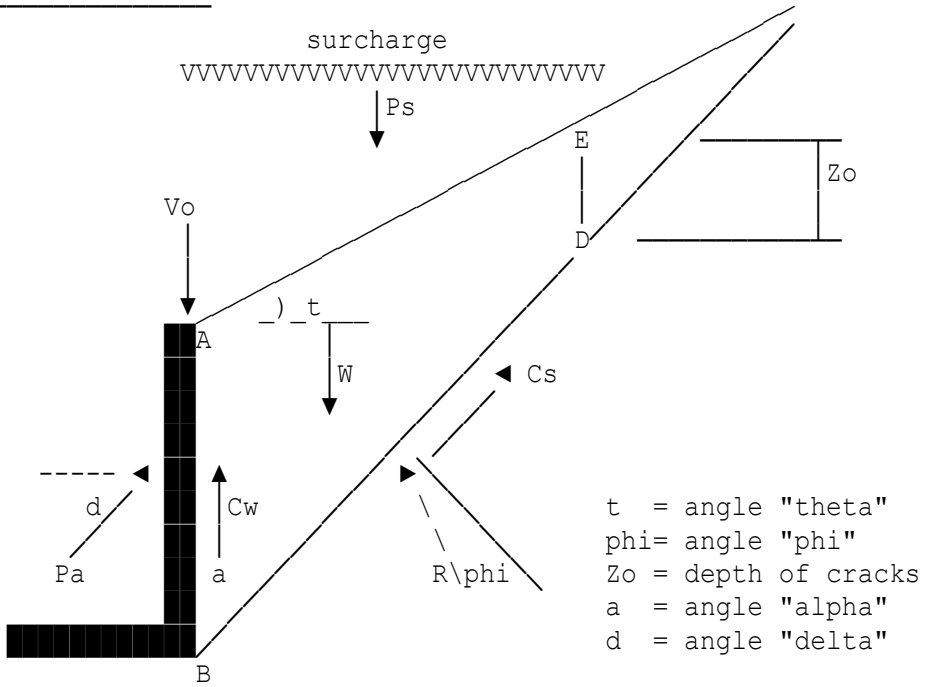

Surcharge load qs=0 kN/m²
Angle of internal friction φ phi=30°
Angle of friction between wall and soil delta=0°

Wedge theory will be adopted

Dry density of soil Ds=20 kN/m³
Cohesion of soil c=0 kN/m²
Coefficient of wall cohesion cw=0 kN/m²
Angle of shearing resistance φ phi=phi=30°
Coefficient of active soil pressure Ka=(TAN(RAD(45-phi/2)))^2=0.33333
K1=Ka=0.33333
Depth of tension cracks Zo=(2*c*K1^0.5-qs*Ka)/(Ds*Ka)=0 m
Horiz.force from water in tension cracks Pw=0 kN

num=W+Ps+Pw*TAN(RAD(ap))-Cw-Cs*COS(RAD(a))-Cs*SIN(RAD(a))
*TAN(RAD(ap))=168.36
den=SIN(RAD(d))+COS(RAD(d))*TAN(RAD(ap))=1.7321

Total active force Pa=num/den=97.2 kN

Summary of results derived from wedge theory

Horizontal component of active force hPa=Pa*COS(RAD(delta))=97.2 kN
Vertical component of active force vPa=Pa*SIN(RAD(delta))=0 kN

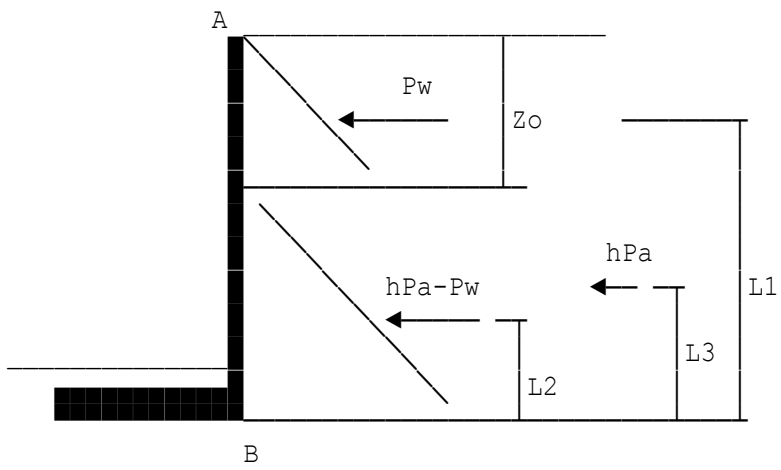

Distance L1=H-2*Zo/3=5.4 m
Distance L2=(H+qs/Ds-Zo)/3=1.8 m
Distance L3=(Pw*L1+(hPa-Pw)*L2)/hPa=1.8 m

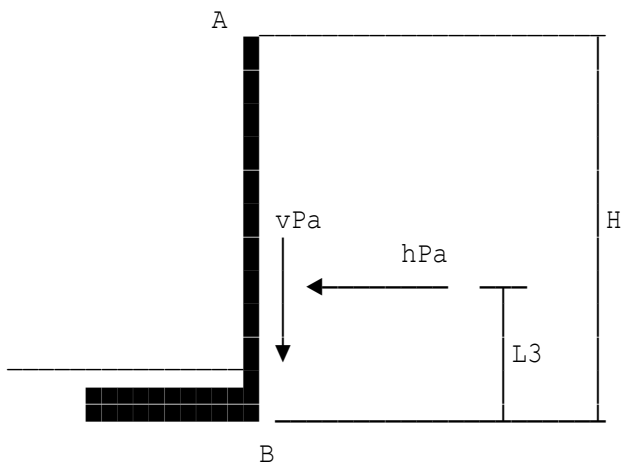

Diagram shows forces on wall due to active pressure

Location: Ex 8.4 Basic Soil Mechanics by Roy Whitlow, 4th Edtn.

Active Pressure on a Retaining Wall to BS8002:1994 using Coulomb's "Wedge Theory" for cohesive and cohesionless soils

Water level is assumed to be below the base of the wall.
Angle of earth surface to horizontal theta=0°
Height of wall under consideration H=5.4 m

Forces on soil wedge

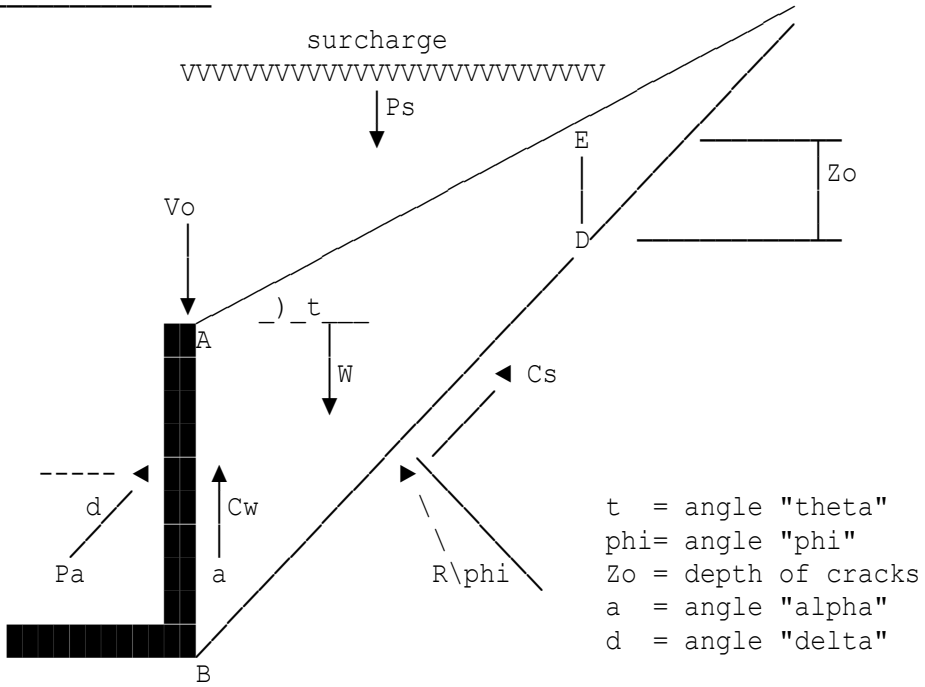

Surcharge load qs=48 kN/m²
Angle of internal friction φ phi=30°
Angle of friction between wall and soil delta=0°

Wedge theory will be adopted

Dry density of soil Ds=20 kN/m³
Cohesion of soil c=0 kN/m²
Coefficient of wall cohesion cw=0 kN/m²
Angle of shearing resistance φ phi=phi=30°
Coefficient of active soil pressure Ka=(TAN(RAD(45-phi/2)))^2=0.33333
K1=Ka=0.33333
Depth of tension cracks Zo=(2*c*K1^0.5-qs*Ka)/(Ds*Ka)=-2.4 m
As Zo is negative this will be ignored Zo=0 m
Density of water Dw=9.81 kN/m³
Horiz.force from water in tension crack Pw=0 kN
Horiz.force from water in tension cracks Pw=0 kN

num=W+Ps+Pw*TAN(RAD(ap))-Cw-Cs*COS(RAD(a))-Cs*SIN(RAD(a))
*TAN(RAD(ap))=318
den=SIN(RAD(d))+COS(RAD(d))*TAN(RAD(ap))=1.7321

Total active force Pa=num/den=183.6 kN

Summary of results derived from wedge theory

Horizontal component of active force hPa=Pa*COS(RAD(delta))=183.6 kN
Vertical component of active force vPa=Pa*SIN(RAD(delta))=0 kN

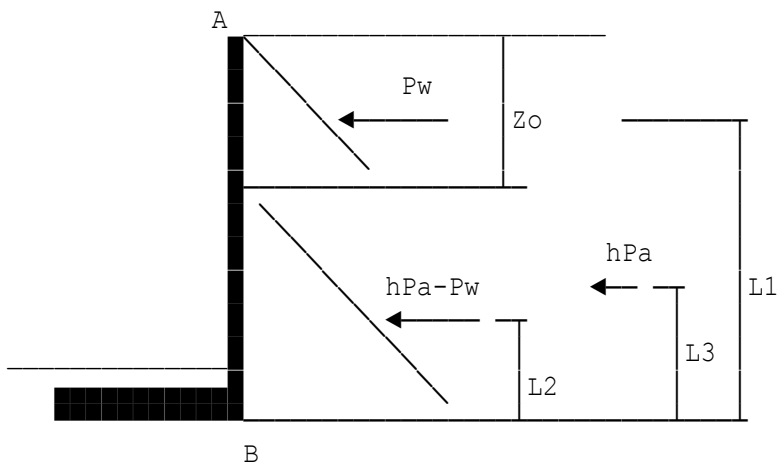

Distance L1=H-2*Zo/3=5.4 m
Distance L2=(H+qs/Ds-Zo)/3=2.6 m
Distance L3=(Pw*L1+(hPa-Pw)*L2)/hPa=2.6 m

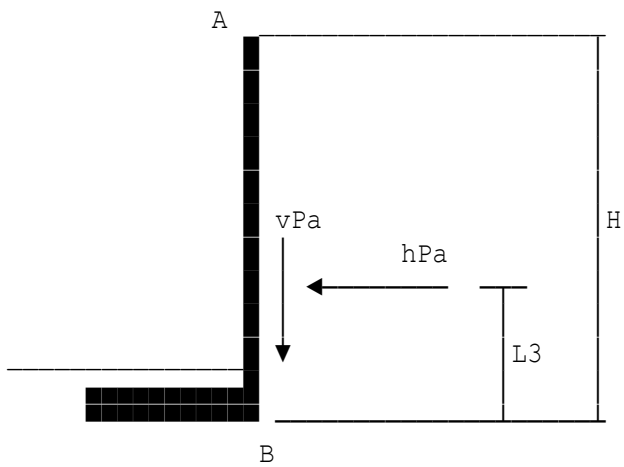

Diagram shows forces on wall due to active pressure

Location: Ex 8.7 Basic Soil Mechanics by Roy Whitlow, 4th Edtn.

Active Pressure on a Retaining Wall to BS8002:1994 using Coulomb's "Wedge Theory" for cohesive and cohesionless soils

Water level is assumed to be below the base of the wall.
Angle of earth surface to horizontal theta=0°
Height of wall under consideration H=8 m

Forces on soil wedge

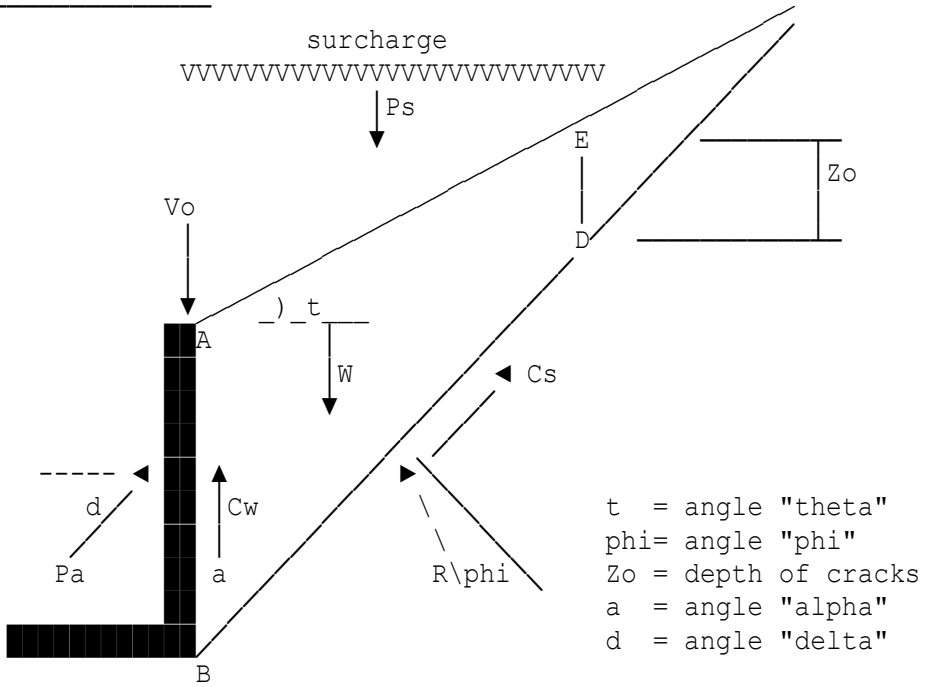

Surcharge load qs=0 kN/m²
Angle of internal friction φ phi=0°
Angle of friction between wall and soil delta=0°

Wedge theory will be adopted

Saturated density of soil Ds=18 kN/m³
Cohesion of soil c=32 kN/m²
Coefficient of wall cohesion cw=0 kN/m²
Angle of shearing resistance φ phi=phi=0°
Coefficient of active soil pressure Ka=(TAN(RAD(45-phi/2)))^2=1
K1=Ka=1
Depth of tension cracks Zo=(2*c*K1^0.5-qs*Ka)/(Ds*Ka)=3.5556 m
Rain water in tension cracks will be ignored.
Horiz.force from water in tension crack Pw=0 kN

num=W+Ps+Pw*TAN(RAD(ap))-Cw-Cs*COS(RAD(a))-Cs*SIN(RAD(a))
*TAN(RAD(ap))=177.78
den=SIN(RAD(d))+COS(RAD(d))*TAN(RAD(ap))=1

Total active force Pa=num/den=177.78 kN

Summary of results derived from wedge theory

Horizontal component of active force hPa=Pa*COS(RAD(delta))=177.78 kN
Vertical component of active force vPa=Pa*SIN(RAD(delta))=0 kN

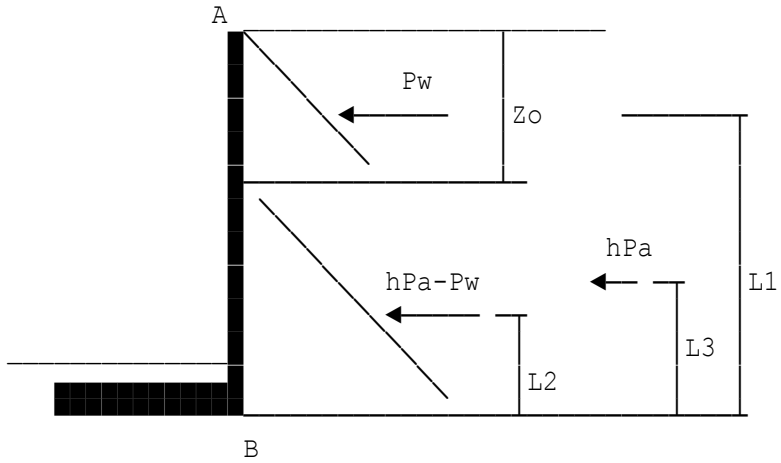

Distance L1=H-2*Zo/3=5.6296 m
Distance L2=(H+qs/Ds-Zo)/3=1.4815 m
Distance L3=(Pw*L1+(hPa-Pw)*L2)/hPa=1.4815 m

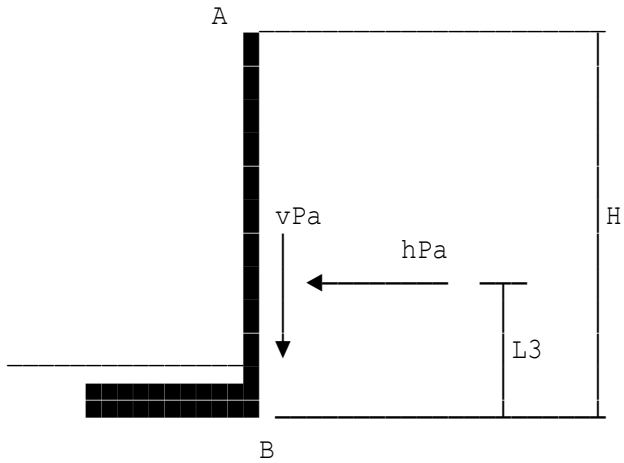

Diagram shows forces on wall due to active pressure

Copyright 1986-2024 Fitzroy Systems Ltd.

Location: Ex 8.8(c) Basic Soil Mechanics by Roy Whitlow, 4th Edtn.

Active Pressure on a Retaining Wall to BS8002:1994 using Coulomb's "Wedge Theory" for cohesive and cohesionless soils

Water level is assumed to be below the base of the wall.
The active pressure of cohesive soils could be evaluated using Coulomb's wedge theory. Bell's solution will be used for evaluating the depth of tension cracks (i.e. depth Zo).

Coulomb's theory assumes that there is a neutral or ineffective zone of depth (Zo) within which there is no adhesion or friction along the back of the wall or along the plane of rupture. This theory also assumes that the surface of rupture is plane. For cohesionless soils Zo will be taken as zero.

Coulomb's wedge theory takes into account two further forces acting on the wedge which have not previously been considered by "Rankine" or "Bell". These are as follows:

a) Cohesion along the failure plane;
b) Cohesion along the plane of the wall.

For cohesionless soils the above forces will be taken as zero.

It is worth pointing out that the "wedge theory" is much simpler to use for evaluating the active pressure when the soil surface is not horizontal. The back of the retaining wall will be assumed to be vertical in this program. Both cohesive and cohesionless soils can be considered using this theory.

Angle of earth surface to horizontal theta=0°
Height of wall under consideration H=8 m

Bell's solution

Bell gives the formula for the active clay pressure at failure on the back of the wall as follows:

pa = Ka .Ds .Z - 2 .c .Ka^0.5

where Ka is the coefficient of active clay pressure which relates to the angle " phi " and is given by the following expression:

Ka = (TAN (45 - phi/2))^2

By comparing two soils, one cohesive (say clay) and the other cohesionless, both having the same bulk density and angle of shearing resistance, the cohesive soil, being more self - supporting, exerts a smaller pressure on the retaining wall than does the cohesionless soil, the difference being the second component in "Bell's equation given above.

Forces on soil wedge

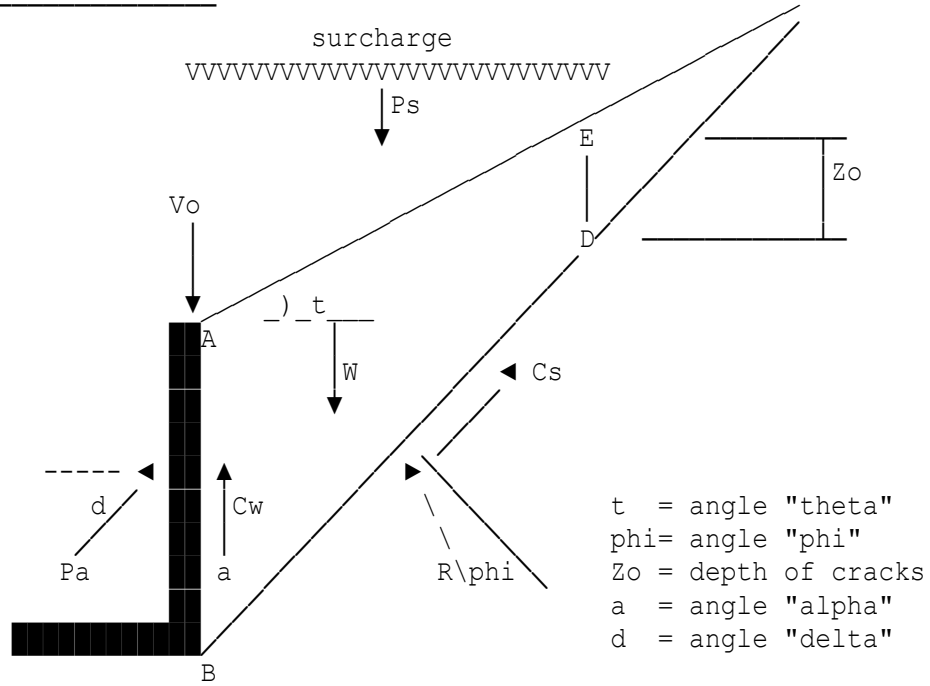

Surcharge load qs=75 kN/m²

By resolving the forces shown in the figure above in two directions the following equations can be derived:

A) Pa COS(d) + Cs SIN(a) = R COS(a + phi) + Pw
B) Pa SIN(d) + Cw - W - Ps + Cs COS(a) + R SIN(a + phi) = 0

substituting equation (A) into (B) the expression becomes

where,

Pa = total active force on the retaining wall in kN
W = weight of soil wedge in kN
Pw = horizontal force from water in tension cracks in kN
Cw = cohesion force at the back of wall (Cw = cw. length KB)
cw = coefficient of wall cohesion or adhesion at back of wall in kN/m²
Cs = cohesion force acting along failure plane (Cs = c .length BD)
c = cohesion of the soil or shear strength of soil in kN/m²
phi = angle of internal friction (or angle of shearing resistance)
delta = angle of friction between wall and soil in degrees
alpha = angle between failure plane and the vertical in degrees
theta = angle between earth surface and horizontal in degrees
Ps = surcharge force (Ps = qs. length AE)
qs = surcharge per unit area in kN/m²

As the plane of rupture (or failure) is not known a series of trial wedges will be considered by varying angle "alpha" and the maximum value active force on the wall (Pa).

Consider the pressure distribution on a vertical wall

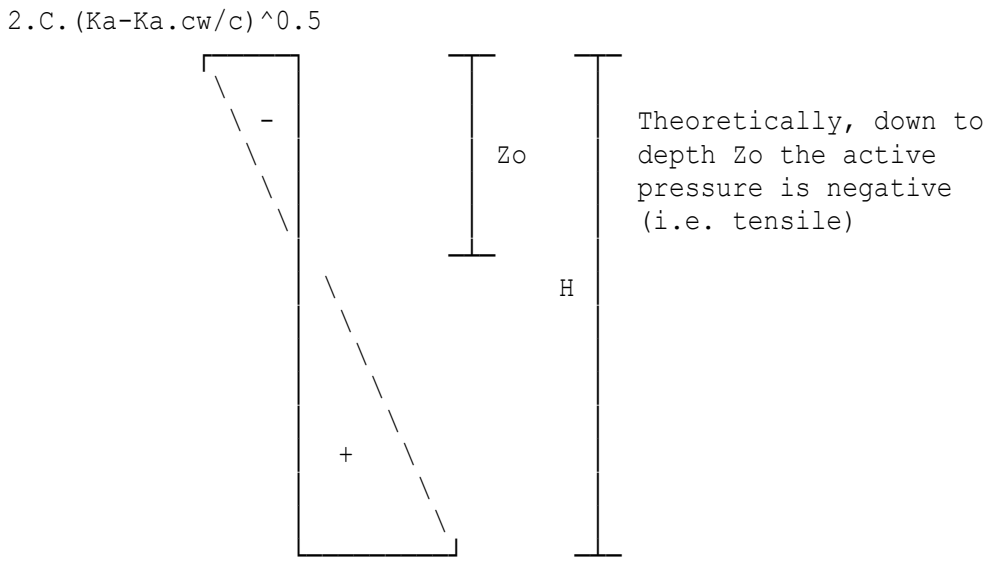

Angle of internal friction φ phi=0°
Angle of friction between wall and soil delta=0°

Wedge theory will be adopted

Saturated density of soil Ds=18.5 kN/m³
Cohesion of soil c=30 kN/m²
Coefficient of wall cohesion cw=0 kN/m²
Angle of shearing resistance φ phi=phi=0°
Coefficient of active soil pressure Ka=(TAN(RAD(45-phi/2)))^2=1
K1=Ka=1
Depth of tension cracks Zo=(2*c*K1^0.5-qs*Ka)/(Ds*Ka)
=-0.81081 m
As Zo is negative this will be ignored Zo=0 m
Density of water Dw=9.81 kN/m³
Horiz.force from water in tension crack Pw=0 kN

num=W+Ps+Pw*TAN(RAD(ap))-Cw-Cs*COS(RAD(a))-Cs*SIN(RAD(a))
*TAN(RAD(ap))=712
den=SIN(RAD(d))+COS(RAD(d))*TAN(RAD(ap))=1

Total active force Pa=num/den=712 kN

Summary of results derived from wedge theory

Horizontal component of active force hPa=Pa*COS(RAD(delta))=712 kN
Vertical component of active force vPa=Pa*SIN(RAD(delta))=0 kN

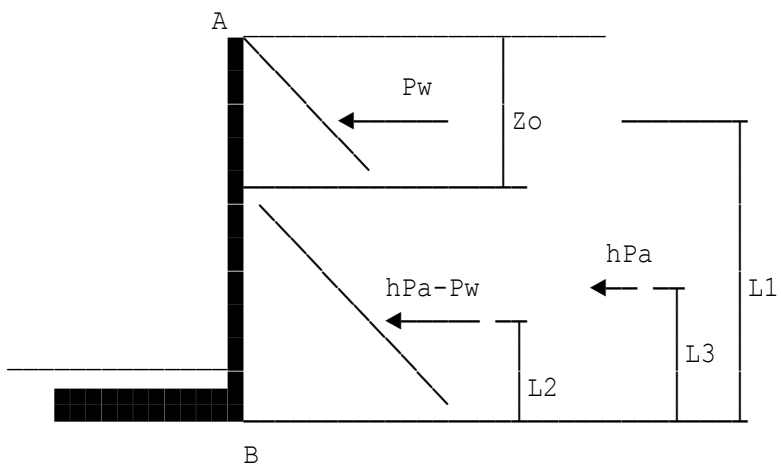

Distance L1=H-2*Zo/3=8 m
Distance L2=(H+qs/Ds-Zo)/3=4.018 m
Distance L3=(Pw*L1+(hPa-Pw)*L2)/hPa=4.018 m

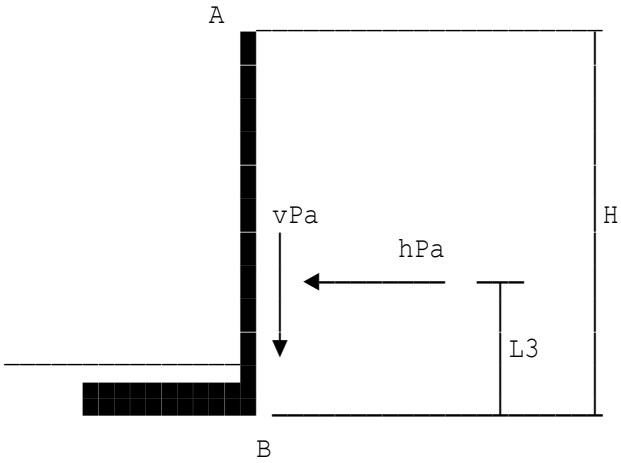

Diagram shows forces on wall due to active pressure

Copyright 1986-2024 Fitzroy Systems Ltd.

Location: Ex 7.4 Problems in Engineering soils, PL Capper/WF Cassie

Active Pressure on a Retaining Wall to BS8002:1994 using Coulomb's "Wedge Theory" for cohesive and cohesionless soils

Water level is assumed to be below the base of the wall.
The active pressure of cohesive soils could be evaluated using Coulomb's wedge theory. Bell's solution will be used for evaluating the depth of tension cracks (i.e. depth Zo).

Coulomb's theory assumes that there is a neutral or ineffective zone of depth (Zo) within which there is no adhesion or friction along the back of the wall or along the plane of rupture. This theory also assumes that the surface of rupture is plane. For cohesionless soils Zo will be taken as zero.

Coulomb's wedge theory takes into account two further forces acting on the wedge which have not previously been considered by "Rankine" or "Bell". These are as follows:

a) Cohesion along the failure plane;
b) Cohesion along the plane of the wall.

For cohesionless soils the above forces will be taken as zero.

It is worth pointing out that the "wedge theory" is much simpler to use for evaluating the active pressure when the soil surface is not horizontal. The back of the retaining wall will be assumed to be vertical in this program. Both cohesive and cohesionless soils can be considered using this theory.

Angle of earth surface to horizontal theta=23.2°
Height of wall under consideration H=8 m

Bell's solution

Bell gives the formula for the active clay pressure at failure on the back of the wall as follows:

pa = Ka .Ds .Z - 2 .c .Ka^0.5

where Ka is the coefficient of active clay pressure which relates to the angle " phi " and is given by the following expression:

Ka = (TAN (45 - phi/2))^2

By comparing two soils, one cohesive (say clay) and the other cohesionless, both having the same bulk density and angle of shearing resistance, the cohesive soil, being more self - supporting, exerts a smaller pressure on the retaining wall than does the cohesionless soil, the difference being the second component in "Bell's equation given above.

Forces on soil wedge

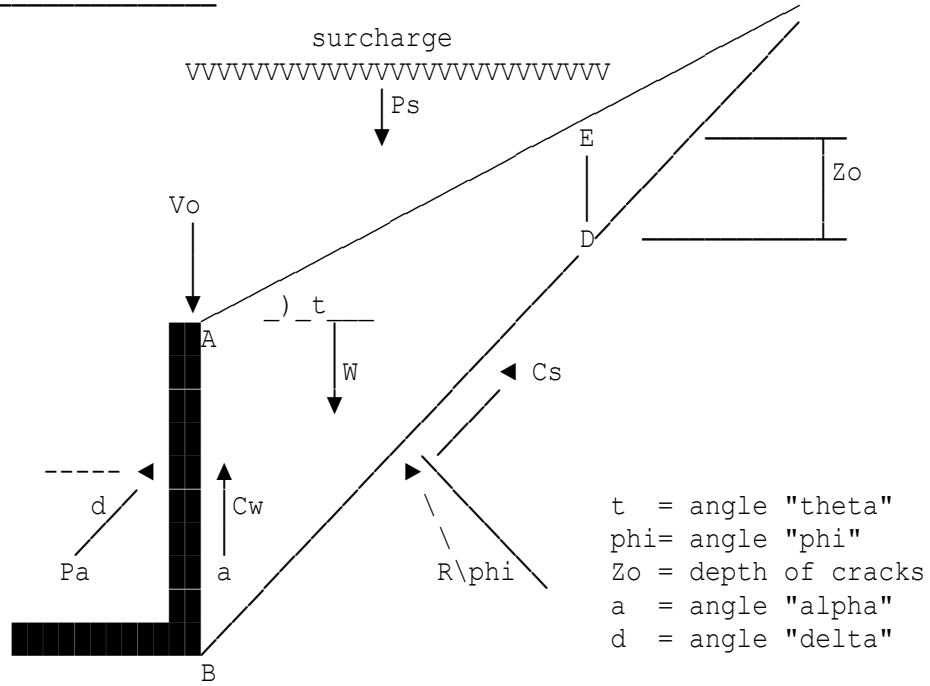

Surcharge load qs=0 kN/m²

By resolving the forces shown in the figure above in two directions the following equations can be derived:

A) Pa COS(d) + Cs SIN(a) = R COS(a + phi) + Pw
B) Pa SIN(d) + Cw - W - Ps + Cs COS(a) + R SIN(a + phi) = 0

substituting equation (A) into (B) the expression becomes

where,

Pa = total active force on the retaining wall in kN
W = weight of soil wedge in kN
Pw = horizontal force from water in tension cracks in kN
Cw = cohesion force at the back of wall (Cw = cw. length KB)
cw = coefficient of wall cohesion or adhesion at back of wall in kN/m²
Cs = cohesion force acting along failure plane (Cs = c .length BD)
c = cohesion of the soil or shear strength of soil in kN/m²
phi = angle of internal friction (or angle of shearing resistance)
delta = angle of friction between wall and soil in degrees
alpha = angle between failure plane and the vertical in degrees
theta = angle between earth surface and horizontal in degrees
Ps = surcharge force (Ps = qs. length AE)
qs = surcharge per unit area in kN/m²

As the plane of rupture (or failure) is not known a series of trial wedges will be considered by varying angle "alpha" and the maximum value active force on the wall (Pa).

Consider the pressure distribution on a vertical wall

2.C.(Ka-Ka.cw/c)^0.5

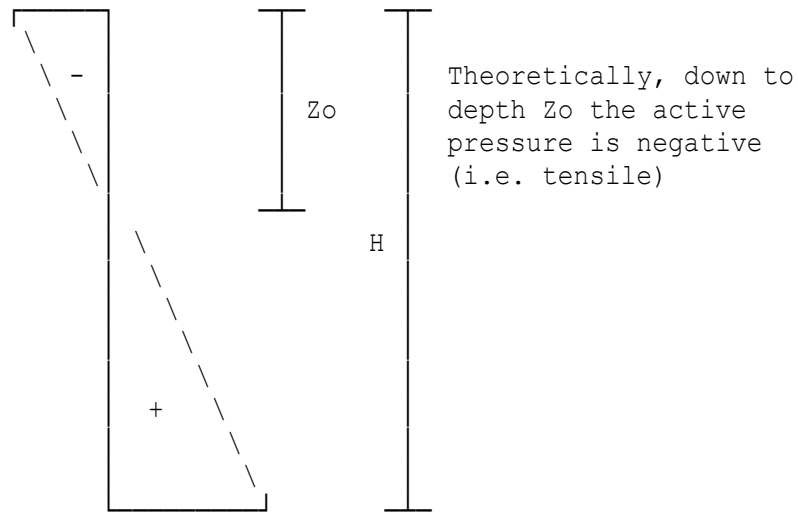

Angle of internal friction φ phi=30°
Angle of friction between wall and soil delta=20°

Wedge theory will be adopted

Dry density of soil Ds=17.17 kN/m³
Cohesion of soil c=0 kN/m²
Coefficient of wall cohesion cw=0 kN/m²
Angle of shearing resistance φ phi=phi=30°
Coefficient of active soil pressure Ka=(TAN(RAD(45-phi/2)))^2=0.33333
K1=Ka=0.33333
Depth of tension cracks Zo=(2*c*K1^0.5-qs*Ka)/(Ds*Ka)=0 m
Horiz.force from water in tension cracks Pw=0 kN

num=W+Ps+Pw*TAN(RAD(ap))-Cw-Cs*COS(RAD(a))-Cs*SIN(RAD(a))
*TAN(RAD(ap))=905.28
den=SIN(RAD(d))+COS(RAD(d))*TAN(RAD(ap))=3.6191

Total active force Pa=num/den=250.14 kN

Summary of results derived from wedge theory

Horizontal component of active force hPa=Pa*COS(RAD(delta))=235.05 kN
Vertical component of active force vPa=Pa*SIN(RAD(delta))=85.552 kN

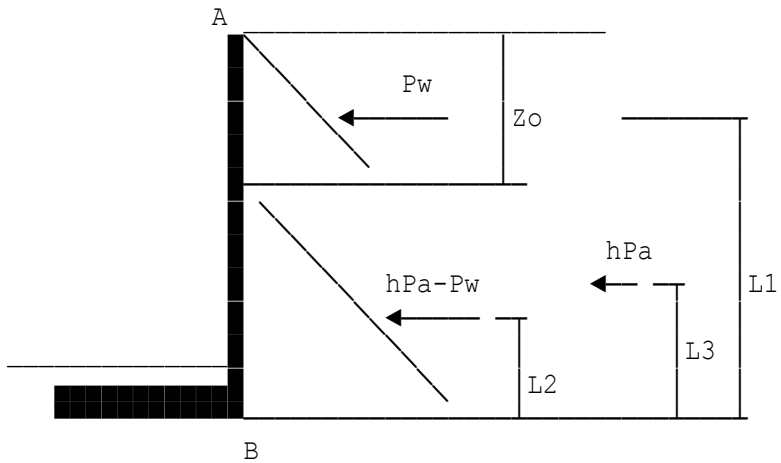

Distance L1=H-2*Zo/3=8 m
Distance L2=(H+qs/Ds-Zo)/3=2.6667 m
Distance L3=(Pw*L1+(hPa-Pw)*L2)/hPa=2.6667 m

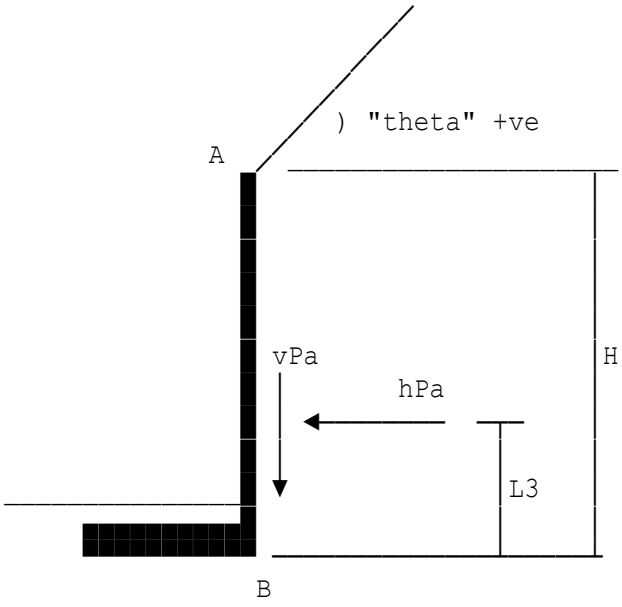

Diagram shows forces on wall due to active pressure

Location: Ex 7.5 Problems in Engineering soils, PL Capper/WF Cassie

Active Pressure on a Retaining Wall to BS8002:1994 using Coulomb's "Wedge Theory" for cohesive and cohesionless soils

Water level is assumed to be below the base of the wall.
Angle of earth surface to horizontal theta=0°
Height of wall under consideration H=8 m

Forces on soil wedge

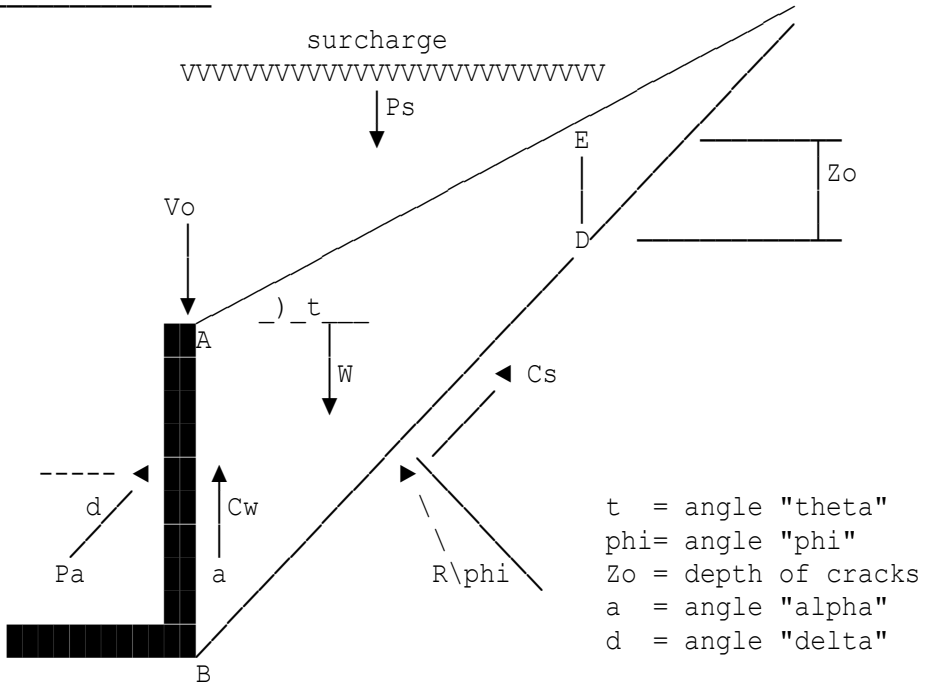

Surcharge load qs=0 kN/m²
Angle of internal friction φ phi=20°
Angle of friction between wall and soil delta=0°

Wedge theory will be adopted

Dry density of soil Ds=17.17 kN/m³
Cohesion of soil c=13 kN/m²
Coefficient of wall cohesion cw=0 kN/m²
Angle of shearing resistance φ phi=phi=20°
Coefficient of active soil pressure Ka=(TAN(RAD(45-phi/2)))^2=0.49029
K1=Ka=0.49029
Depth of tension cracks Zo=(2*c*K1^0.5-qs*Ka)/(Ds*Ka)=2.1626 m
Rain water in tension cracks will be ignored.
Horiz.force from water in tension crack Pw=0 kN

num=W+Ps+Pw*TAN(RAD(ap))-Cw-Cs*COS(RAD(a))-Cs*SIN(RAD(a))
*TAN(RAD(ap))=204.84
den=SIN(RAD(d))+COS(RAD(d))*TAN(RAD(ap))=1.4281

Total active force Pa=num/den=143.43 kN

Summary of results derived from wedge theory

Horizontal component of active force hPa=Pa*COS(RAD(delta))=143.43 kN
Vertical component of active force vPa=Pa*SIN(RAD(delta))=0 kN

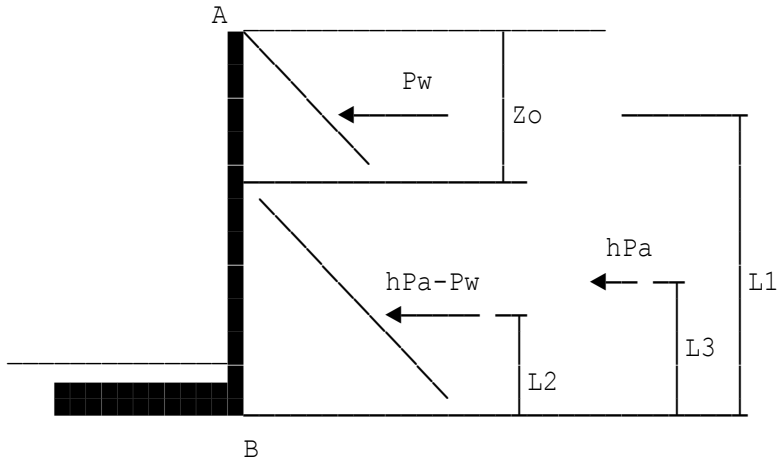

Distance L1=H-2*Zo/3=6.5583 m
Distance L2=(H+qs/Ds-Zo)/3=1.9458 m
Distance L3=(Pw*L1+(hPa-Pw)*L2)/hPa=1.9458 m

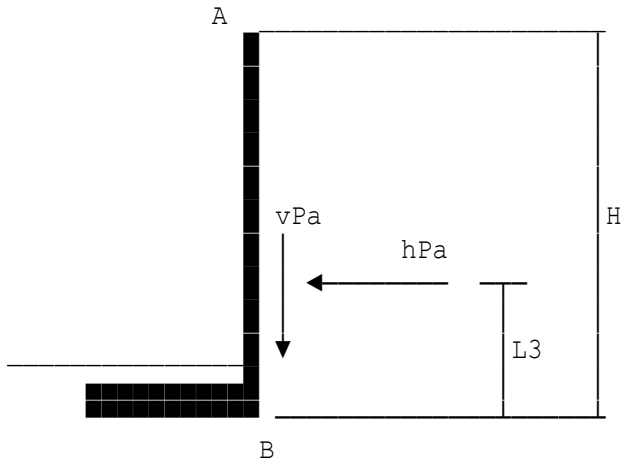

Diagram shows forces on wall due to active pressure

Location: Ex 7.8 Problems in Engineering soils, PL Capper/WF Cassie

Active Pressure on a Retaining Wall to BS8002:1994 using Coulomb's "Wedge Theory" for cohesive and cohesionless soils

Water level is assumed to be below the base of the wall.
Angle of earth surface to horizontal theta=0°
Height of wall under consideration H=10 m

Forces on soil wedge

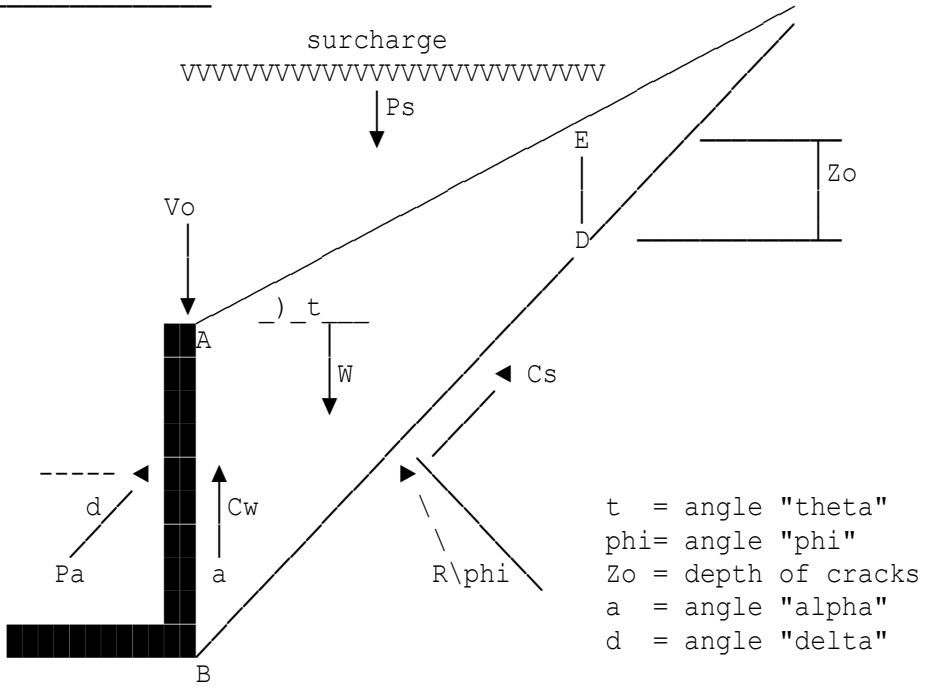

Surcharge load qs=0 kN/m²
Angle of internal friction φ phi=15°
Angle of friction between wall and soil delta=15°

Wedge theory will be adopted

Dry density of soil Ds=18.6 kN/m³
Cohesion of soil c=15 kN/m²
Coefficient of wall cohesion cw=15 kN/m²
Angle of shearing resistance φ phi=phi=15°
Coefficient of active soil pressure Ka=(TAN(RAD(45-phi/2)))^2=0.58879
K1=Ka+Ka*cw/c=1.1776
Depth of tension cracks Zo=(2*c*K1^0.5-qs*Ka)/(Ds*Ka)=2.9726 m
Rain water in tension cracks will be ignored.
Horiz.force from water in tension crack Pw=0 kN

```
num=W+Ps+Pw*TAN(RAD(ap))-Cw-Cs*COS(RAD(a))-Cs*SIN(RAD(a))
    *TAN(RAD(ap))=454.42
den=SIN(RAD(d))+COS(RAD(d))*TAN(RAD(ap))=1.9319
```

Total active force Pa=num/den=235.23 kN

Summary of results derived from wedge theory

Horizontal component of active force hPa=Pa*COS(RAD(delta))=227.21 kN
Vertical component of active force vPa=Pa*SIN(RAD(delta))=60.881 kN

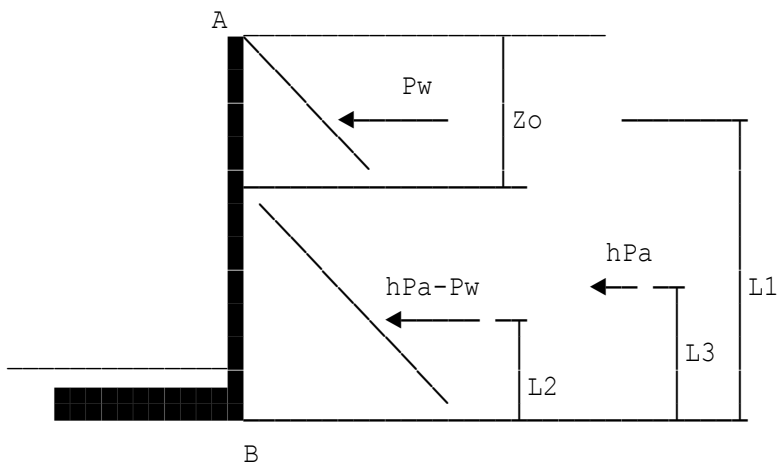

Distance L1=H-2*Zo/3=8.0182 m
Distance L2=(H+qs/Ds-Zo)/3=2.3425 m
Distance L3=(Pw*L1+(hPa-Pw)*L2)/hPa=2.3425 m

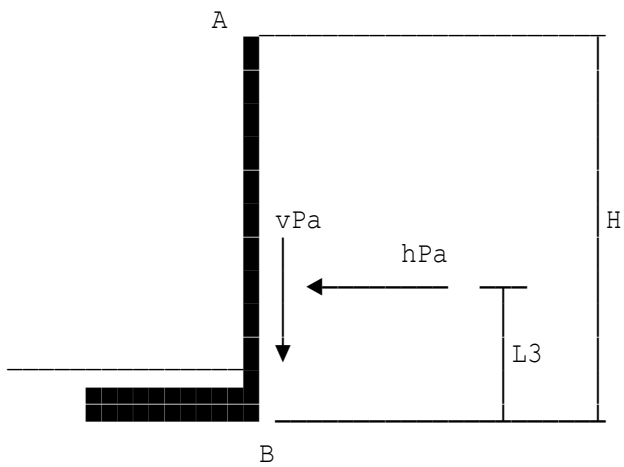

Diagram shows forces on wall due to active pressure

Location: Ex 6.4 of Soil Mechanics by RF Craig, 6th Edtn.

Active Pressure on a Retaining Wall to BS8002:1994 using Coulomb's "Wedge Theory" for cohesive and cohesionless soils

The angle of friction between wall and soil "delta" will be taken as zero as the soil at the top of the wall is assumed to be horizontal.

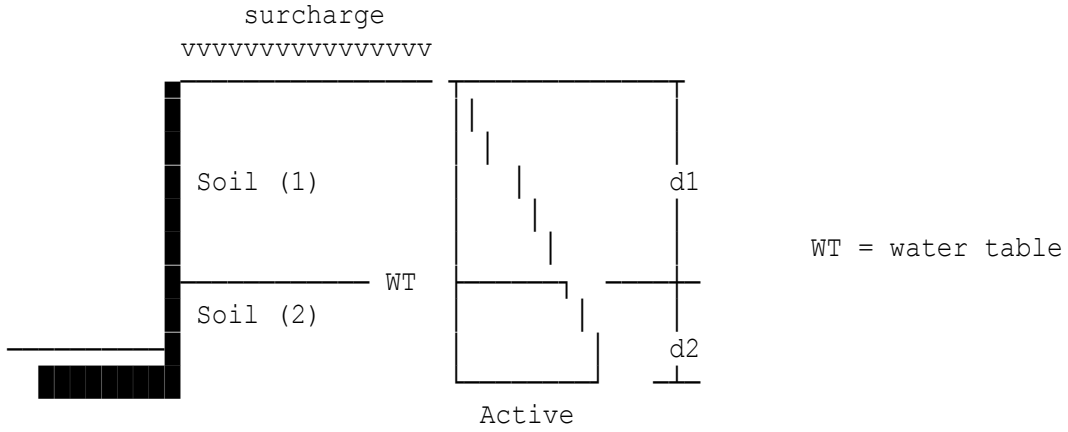

Soil 1

Surcharge pressure	q=0 kN/m²
Depth of soil (1)	d1=4 m
Cohesive strength of soil (1)	c1'=8 kN/m²
Coefficient of wall cohesion	cw1=4 kN/m²
Friction angle of soil (1)	phi1'=27°
Dry unit weight of soil (1)	gam1=20 kN/m³

Soil 2

Depth of soil (2)	d2=4 m
Cohesive strength of soil (2)	c2'=8 kN/m²
Coefficient of wall cohesion	cw2=4 kN/m²
Friction angle of soil (2)	phi2'=27°
Saturated unit weight soil (2)	gam2=20 kN/m³
For soil 1	Ka1=(1-SIN(RAD(phi1')))/(1 +SIN(RAD(phi1'))) =0.37552
For soil 2	Ka2=(1-SIN(RAD(phi2')))/(1 +SIN(RAD(phi2'))) =0.37552
Depth of tension cracks	Zo=(2*c1'*SQR(Kac)-q*Ka1)/(gam1*Ka1) =1.5989 m
Active forces on wall (soil 1)	P1=pat1*d1=-39.219 kN
	P2=0.5*(pab1-pat1)*d1=60.084 kN
Active forces on wall (soil 2)	P3=pat2*d2=80.949 kN
	P4=0.5*(pab2-pat2)*d2=109.09 kN

Active force from water in crack P5=Pw=12.539 kN

Point of application of total active pressure will be at
a distance "L3" from the bottom of the wall.

L3=(P1*L1+P2*L2+P3*L3+P4*L4+P5*L5)
/Pa=2.1456 m

Summary of results

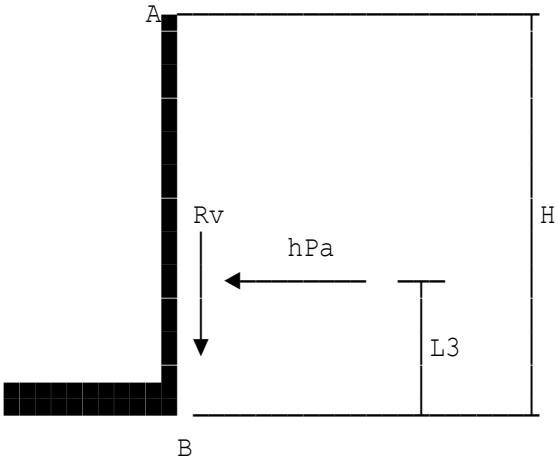

Diagram shows forces on wall and point of application

Horizontal component of active force	hPa=Pa=223.45 kN
Vertical component of active force	Rv=0 kN
Point of application of active force	L3=L3=2.1456 m

Location: Example 8.1 Basic Soil Mechanics by Roy Whitlow, 4th Edtn.

Active pressure on a retaining wall to BS EN 1997-1:2004 using Coulomb's "Wedge Theory" for cohesive and cohesionless soils

Water level is assumed to be below the base of the wall.
Angle of earth surface to horizontal theta=0°
Height of wall under consideration H=5.4 m

Forces on soil wedge

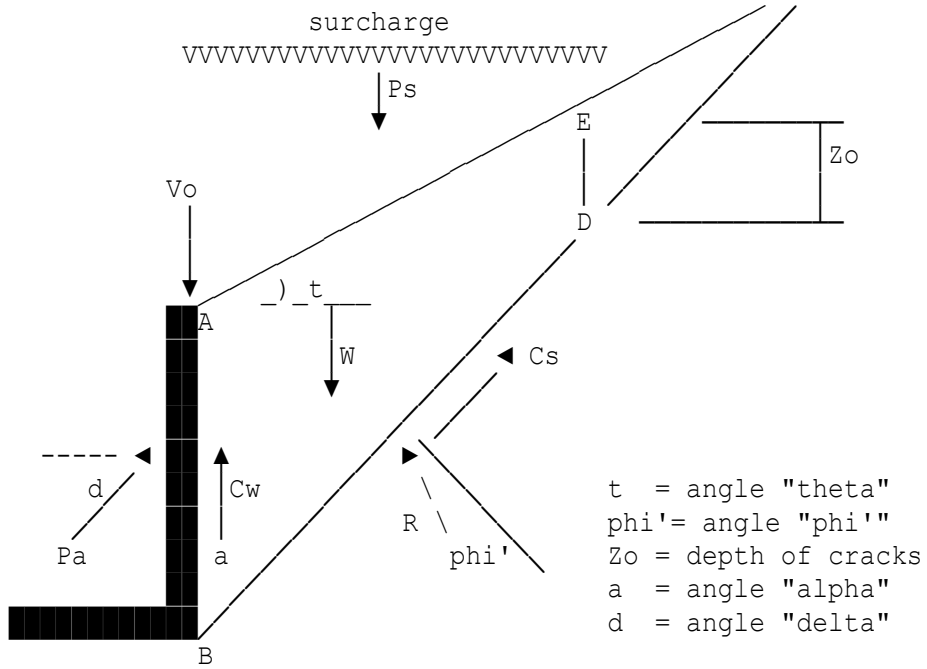

Surcharge load qs=0 kN/m²
Angle of shearing resistance φ phi'=30°
Angle of friction between wall and soil delta=0°

Wedge theory will be adopted

Dry density of soil Ds=20 kN/m³
Cohesion of soil c=0 kN/m²
Coefficient of wall cohesion cw=0 kN/m²
Angle of shearing resistance φ phi'=phi'=30°
Coefficient of active soil pressure Ka=(TAN(RAD(45-phi'/2)))^2=0.33333
K1=Ka=0.33333
Depth of tension cracks Zo=(2*c*K1^0.5-qs*Ka)/(Ds*Ka)=0 m
Horiz.force from water in tension cracks Pw=0 kN

num=W+Ps+Pw*TAN(RAD(ap))-Cw-Cs*COS(RAD(a))-Cs*SIN(RAD(a))
*TAN(RAD(ap))=168.36
den=SIN(RAD(d))+COS(RAD(d))*TAN(RAD(ap))=1.7321

Total active force Pa=num/den=97.2 kN

Summary of results derived from wedge theory

Horizontal component of active force hPa=Pa*COS(RAD(delta))=97.2 kN
Vertical component of active force vPa=Pa*SIN(RAD(delta))=0 kN

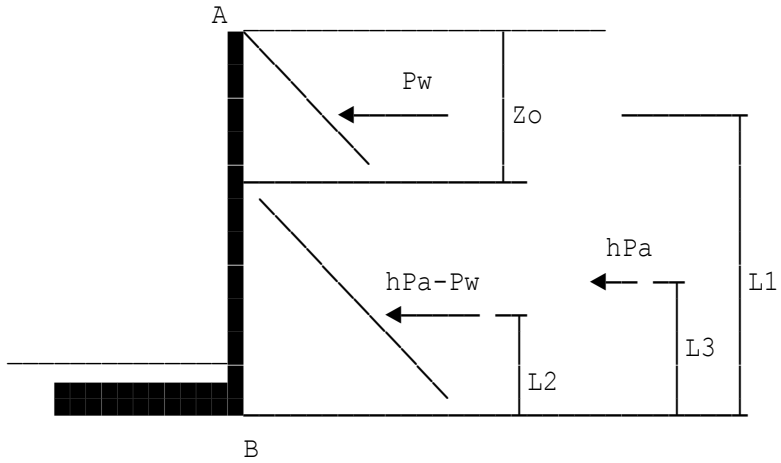

Distance L1=H-2*Zo/3=5.4 m
Distance L2=(H+qs/Ds-Zo)/3=1.8 m
Distance L3=(Pw*L1+(hPa-Pw)*L2)/hPa=1.8 m

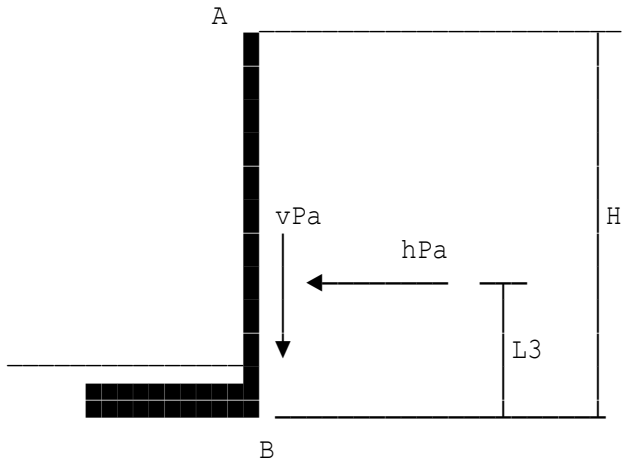

Diagram shows forces on wall due to active pressure

Location: Ex 6.1b of Soil Mechanics by RF Craig, 6th Edtn.

Active pressure on a retaining wall to BS EN 1997-1:2004 using Coulomb's "Wedge Theory" for cohesive and cohesionless soils

The angle of friction between wall and soil "delta" will be taken as zero as the soil at the top of the wall is assumed to be horizontal.

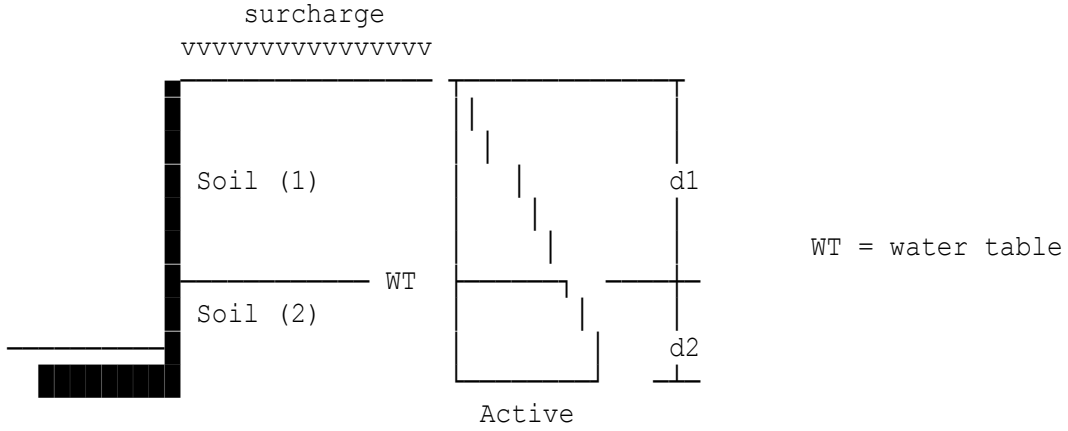

Surcharge pressure q=0 kN/m²

Design data for soil 1

Depth of soil d1=2 m
Cohesive strength of soil c1'=0 kN/m²
Coefficient of wall cohesion cw1=0 kN/m²
Angle of shearing resistance phi1'=35°
Dry unit weight of soil gam1=17 kN/m³

Design data for soil 2

Depth of soil d2=3 m
Cohesive strength of soil c2'=0 kN/m²
Coefficient of wall cohesion cw2=0 kN/m²
Angle of shearing resistance phi2'=35°
Saturated unit weight soil gam2=20 kN/m³

Horiz.force from water in tension crack Pw=0 kN
No tension crack will develop Zo=0 m
Active forces on wall (soil 1) P1=pat1*d1=0 kN

P2=0.5*(pab1-pat1)*d1=9.2137 kN

Active forces on wall (soil 2) P3=pat2*d2=27.641 kN

P4=0.5*(pab2-pat2)*d2=56.571 kN

Active force from water in crack P5=Pw=0 kN

Point of application of total active pressure will be at
a distance "L3" from the bottom of the wall.

L3=(P1*L1+P2*L2+P3*L3+P4*L4+P5*L5)
/Pa=1.4109 m

Summary of results

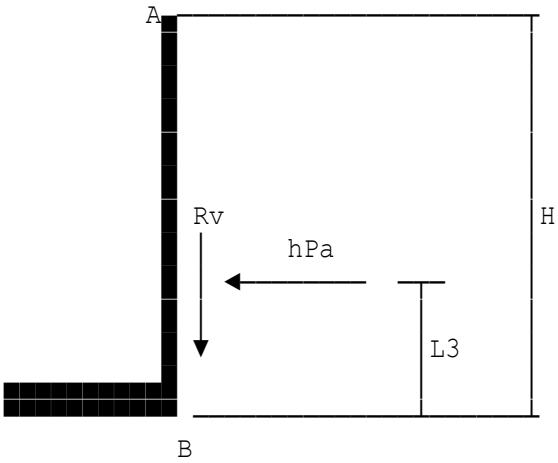

Diagram shows forces on wall and point of application

Horizontal component of active force	hPa=Pa=93.426 kN
Vertical component of active force	Rv=0 kN
Point of application of active force	L3=L3=1.4109 m

Location: Example 8.1 Basic Soil Mechanics by Roy Whitlow, 4th Edtn.

Active pressure on a retaining wall to BS EN 1997-1:2004 using Coulomb's "Wedge Theory" for cohesive and cohesionless soils

Water level is assumed to be below the base of the wall.
Angle of earth surface to horizontal theta=0°
Height of wall under consideration H=5.4 m

Forces on soil wedge

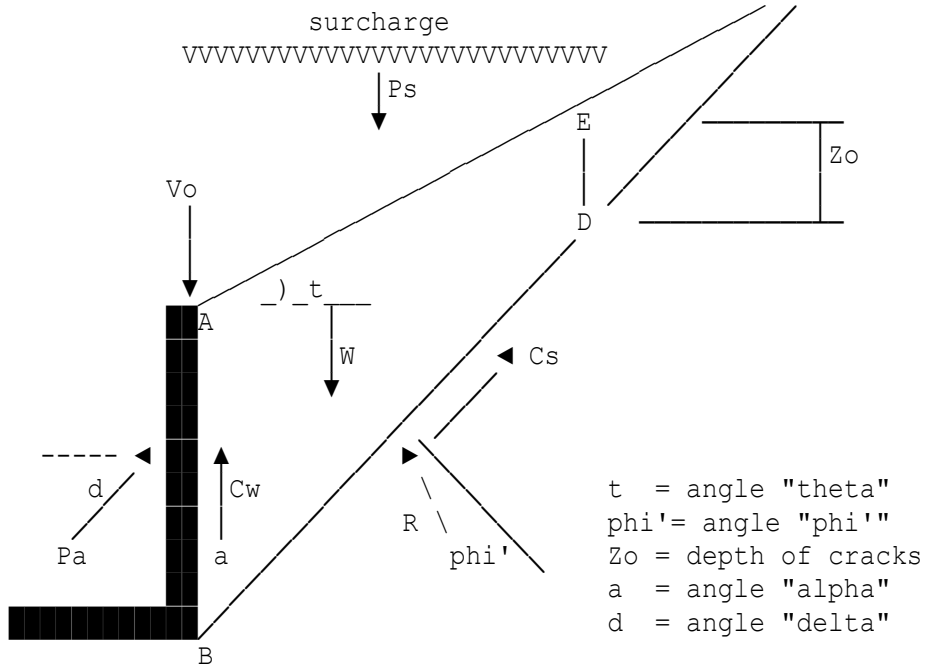

Surcharge load qs=0 kN/m²
Angle of shearing resistance φ phi'=30°
Angle of friction between wall and soil delta=0°

Wedge theory will be adopted

Dry density of soil Ds=20 kN/m³
Cohesion of soil c=0 kN/m²
Coefficient of wall cohesion cw=0 kN/m²
Angle of shearing resistance φ phi'=phi'=30°
Coefficient of active soil pressure Ka=(TAN(RAD(45-phi'/2)))^2=0.33333
K1=Ka=0.33333
Depth of tension cracks Zo=(2*c*K1^0.5-qs*Ka)/(Ds*Ka)=0 m
Horiz.force from water in tension cracks Pw=0 kN

num=W+Ps+Pw*TAN(RAD(ap))-Cw-Cs*COS(RAD(a))-Cs*SIN(RAD(a))
*TAN(RAD(ap))=168.36
den=SIN(RAD(d))+COS(RAD(d))*TAN(RAD(ap))=1.7321

Total active force Pa=num/den=97.2 kN

Summary of results derived from wedge theory

Horizontal component of active force hPa=Pa*COS(RAD(delta))=97.2 kN
Vertical component of active force vPa=Pa*SIN(RAD(delta))=0 kN

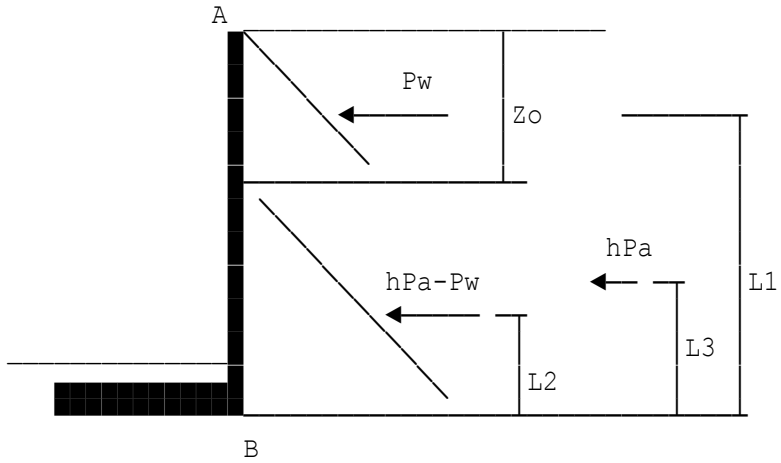

Distance L1=H-2*Zo/3=5.4 m
Distance L2=(H+qs/Ds-Zo)/3=1.8 m
Distance L3=(Pw*L1+(hPa-Pw)*L2)/hPa=1.8 m

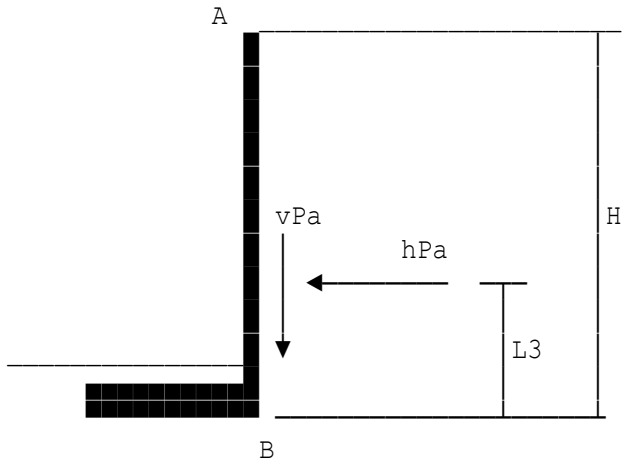

Diagram shows forces on wall due to active pressure

Location: Ex 8.4 Basic Soil Mechanics by Roy Whitlow, 4th Edtn.

Active pressure on a retaining wall to BS EN 1997-1:2004 using Coulomb's "Wedge Theory" for cohesive and cohesionless soils

Water level is assumed to be below the base of the wall.
Angle of earth surface to horizontal theta=0°
Height of wall under consideration H=5.4 m

Forces on soil wedge

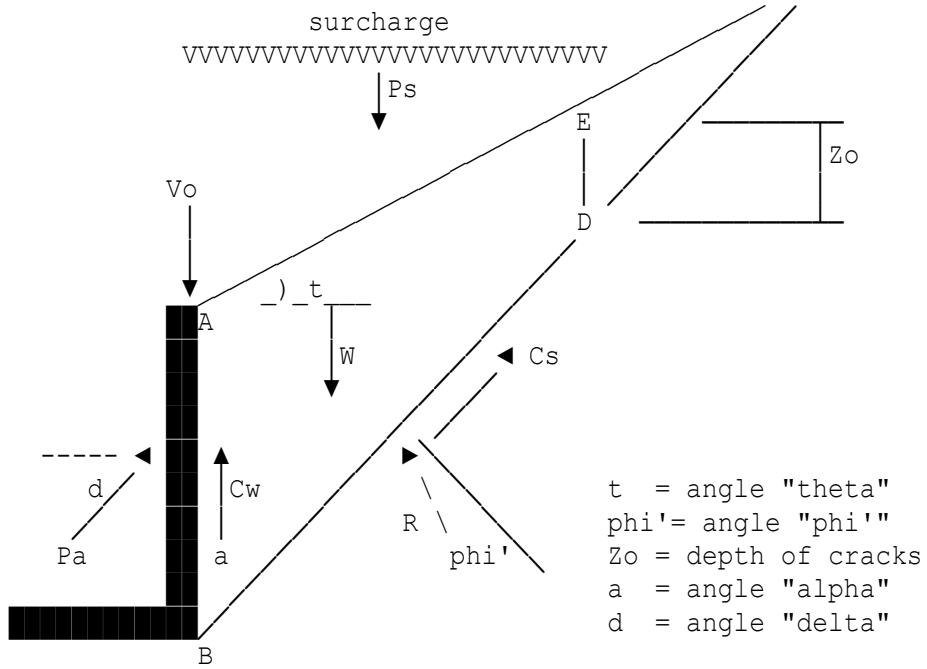

Surcharge load qs=48 kN/m²
Angle of shearing resistance φ phi'=30°
Angle of friction between wall and soil delta=0°

Wedge theory will be adopted

Dry density of soil Ds=20 kN/m³
Cohesion of soil c=0 kN/m²
Coefficient of wall cohesion cw=0 kN/m²
Angle of shearing resistance φ phi'=phi'=30°
Coefficient of active soil pressure Ka=(TAN(RAD(45-phi'/2)))^2=0.33333
K1=Ka=0.33333
Depth of tension cracks Zo=(2*c*K1^0.5-qs*Ka)/(Ds*Ka)=-2.4 m
As Zo is negative this will be ignored Zo=0 m
Density of water Dw=9.81 kN/m³
Horiz.force from water in tension crack Pw=0 kN
Horiz.force from water in tension cracks Pw=0 kN

num=W+Ps+Pw*TAN(RAD(ap))-Cw-Cs*COS(RAD(a))-Cs*SIN(RAD(a))
*TAN(RAD(ap))=318
den=SIN(RAD(d))+COS(RAD(d))*TAN(RAD(ap))=1.7321

Total active force Pa=num/den=183.6 kN

Summary of results derived from wedge theory

Horizontal component of active force hPa=Pa*COS(RAD(delta))=183.6 kN
Vertical component of active force vPa=Pa*SIN(RAD(delta))=0 kN

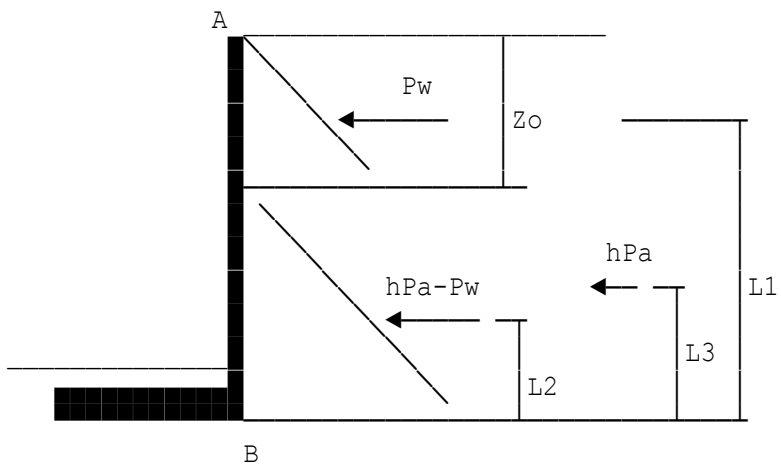

Distance L1=H-2*Zo/3=5.4 m
Distance L2=(H+qs/Ds-Zo)/3=2.6 m
Distance L3=(Pw*L1+(hPa-Pw)*L2)/hPa=2.6 m

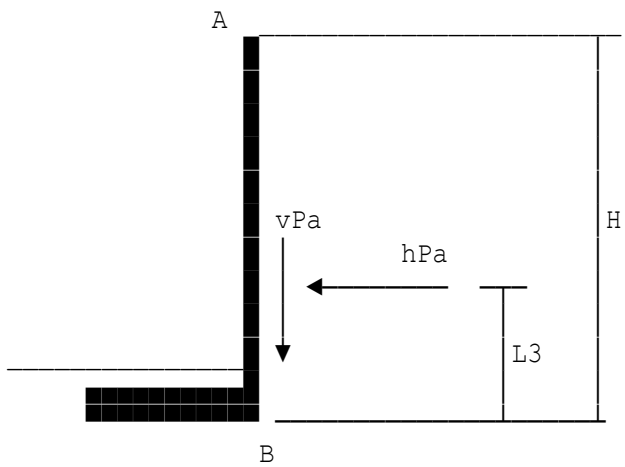

Diagram shows forces on wall due to active pressure

Location: Ex 8.7 Basic Soil Mechanics by Roy Whitlow, 4th Edtn.

Active pressure on a retaining wall to BS EN 1997-1:2004 using Coulomb's "Wedge Theory" for cohesive and cohesionless soils

Water level is assumed to be below the base of the wall.
Angle of earth surface to horizontal theta=0°
Height of wall under consideration H=8 m

Forces on soil wedge

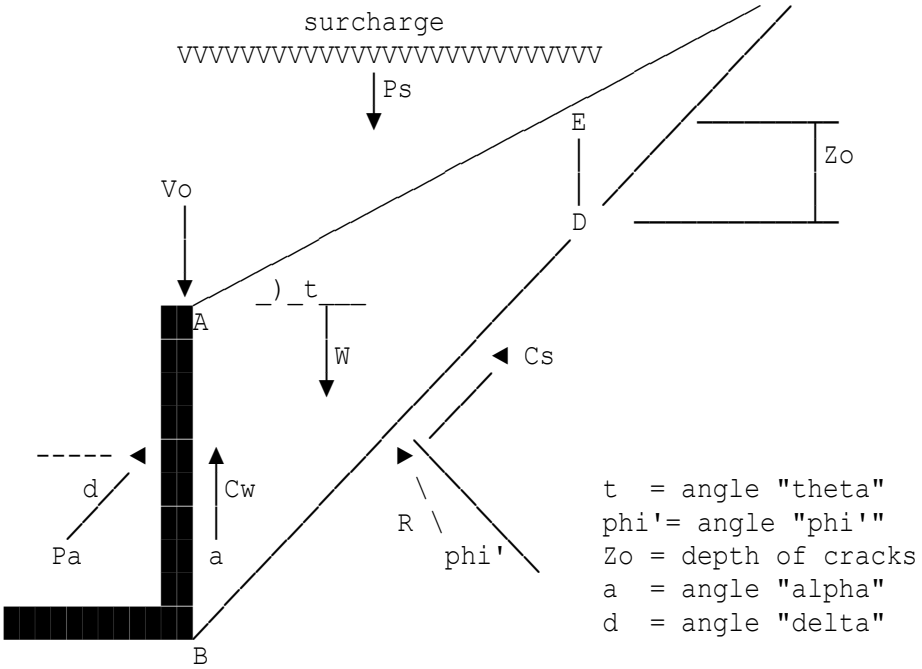

Surcharge load qs=0 kN/m²
Angle of shearing resistance φ phi'=0°
Angle of friction between wall and soil delta=0°

Wedge theory will be adopted

Saturated density of soil Ds=18 kN/m³
Cohesion of soil c=32 kN/m²
Coefficient of wall cohesion cw=0 kN/m²
Angle of shearing resistance φ phi'=phi'=0°
Coefficient of active soil pressure Ka=(TAN(RAD(45-phi'/2)))^2=1
K1=Ka=1
Depth of tension cracks Zo=(2*c*K1^0.5-qs*Ka)/(Ds*Ka)=3.5556 m
Rain water in tension cracks will be ignored.
Horiz.force from water in tension crack Pw=0 kN

num=W+Ps+Pw*TAN(RAD(ap))-Cw-Cs*COS(RAD(a))-Cs*SIN(RAD(a))
*TAN(RAD(ap))=177.78
den=SIN(RAD(d))+COS(RAD(d))*TAN(RAD(ap))=1

Total active force Pa=num/den=177.78 kN

Summary of results derived from wedge theory

Horizontal component of active force hPa=Pa*COS(RAD(delta))=177.78 kN
Vertical component of active force vPa=Pa*SIN(RAD(delta))=0 kN

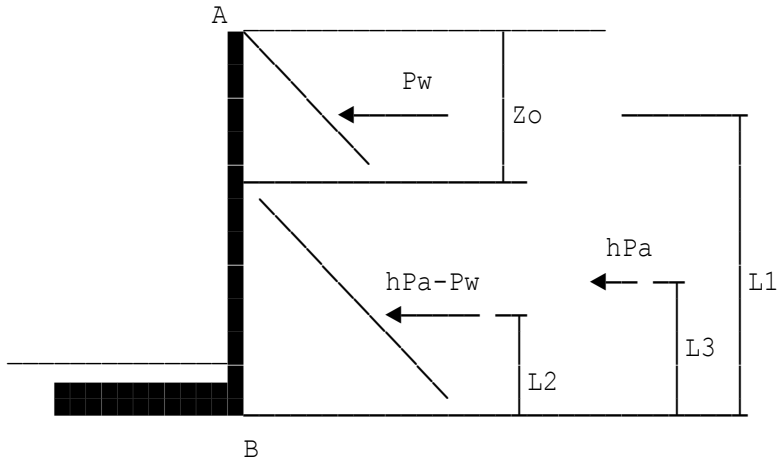

Distance L1=H-2*Zo/3=5.6296 m
Distance L2=(H+qs/Ds-Zo)/3=1.4815 m
Distance L3=(Pw*L1+(hPa-Pw)*L2)/hPa=1.4815 m

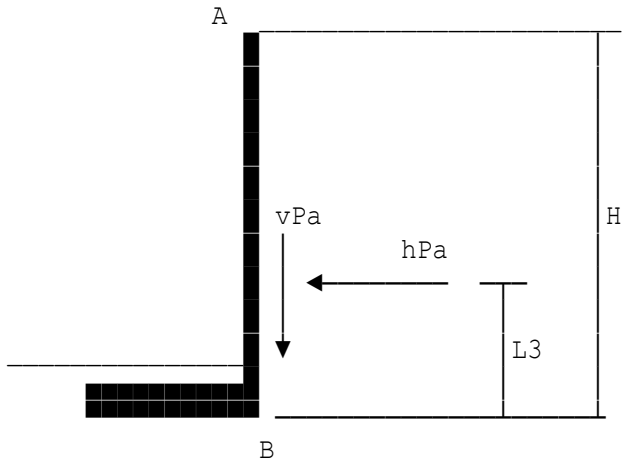

Diagram shows forces on wall due to active pressure

Copyright 1986-2024 Fitzroy Systems Ltd.

Location: Ex 8.8(c) Basic Soil Mechanics by Roy Whitlow, 4th Edtn.

Active pressure on a retaining wall to BS EN 1997-1:2004 using Coulomb's "Wedge Theory" for cohesive and cohesionless soils

Water level is assumed to be below the base of the wall.
The active pressure of cohesive soils could be evaluated using Coulomb's wedge theory. Bell's solution will be used for evaluating the depth of tension cracks (i.e. depth Zo).

Coulomb's theory assumes that there is a neutral or ineffective zone of depth (Zo) within which there is no adhesion or friction along the back of the wall or along the plane of rupture. This theory also assumes that the surface of rupture is plane. For cohesionless soils Zo will be taken as zero.

Coulomb's wedge theory takes into account two further forces acting on the wedge which have not previously been considered by "Rankine" or "Bell". These are as follows:

a) Cohesion along the failure plane;
b) Cohesion along the plane of the wall.

For cohesionless soils the above forces will be taken as zero.

It is worth pointing out that the "wedge theory" is much simpler to use for evaluating the active pressure when the soil surface is not horizontal. The back of the retaining wall will be assumed to be vertical in this program. Both cohesive and cohesionless soils can be considered using this theory.

Angle of earth surface to horizontal theta=0°
Height of wall under consideration H=8 m

Bell's solution

Bell gives the formula for the active clay pressure at failure on the back of the wall as follows:

pa = Ka .Ds .Z - 2 .c .Ka^0.5

where Ka is the coefficient of active clay pressure which relates to the angle " phi' " and is given by the following expression:

Ka = (TAN (45 - phi'/2))^2

By comparing two soils, one cohesive (say clay) and the other cohesionless, both having the same bulk density and angle of shearing resistance, the cohesive soil, being more self - supporting, exerts a smaller pressure on the retaining wall than does the cohesionless soil, the difference being the second component in "Bell's equation given above.

Forces on soil wedge

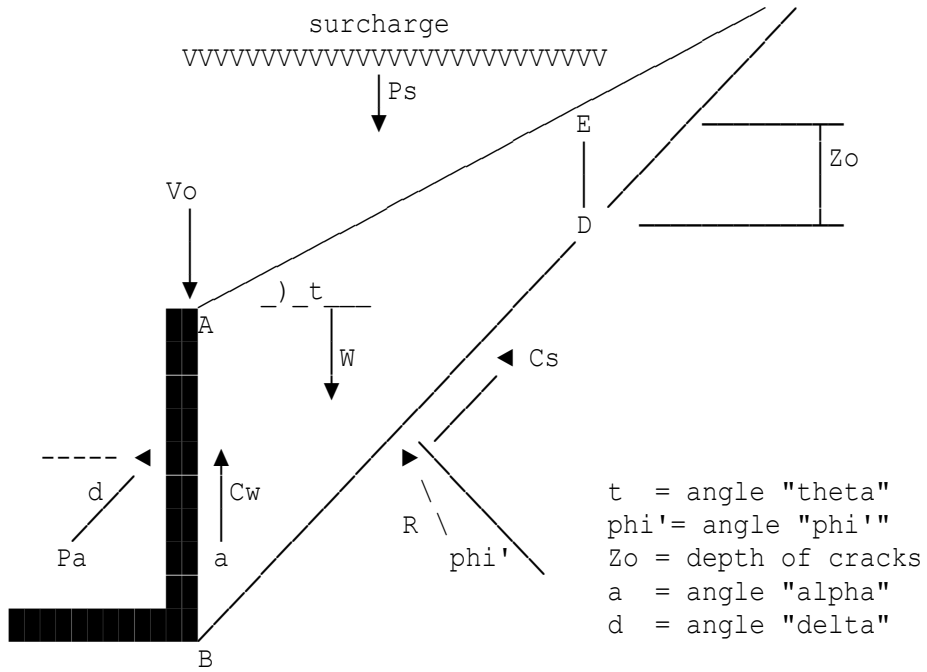

Surcharge load qs=75 kN/m²

By resolving the forces shown in the figure above in two directions the following equations can be derived:

A) Pa COS(d) + Cs SIN(a) = R COS(a + phi') + Pw
B) Pa SIN(d) + Cw - W - Ps + Cs COS(a) + R SIN(a + phi') = 0

substituting equation (A) into (B) the expression becomes

where,

Pa = total active force on the retaining wall in kN
W = weight of soil wedge in kN
Pw = horizontal force from water in tension cracks in kN
Cw = cohesion force at the back of wall (Cw = cw. length KB)
cw = coefficient of wall cohesion or adhesion at back of wall in kN/m²
Cs = cohesion force acting along failure plane (Cs = c .length BD)
c = cohesion of the soil or shear strength of soil in kN/m²
phi' = angle of internal friction (or angle of shearing resistance)
delta = angle of friction between wall and soil in degrees
alpha = angle between failure plane and the vertical in degrees
theta = angle between earth surface and horizontal in degrees
Ps = surcharge force (Ps = qs. length AE)
qs = surcharge per unit area in kN/m²

As the plane of rupture (or failure) is not known a series of trial wedges will be considered by varying angle "alpha" and the maximum value active force on the wall (Pa).

Consider the pressure distribution on a vertical wall

2.C.(Ka-Ka.cw/c)^0.5

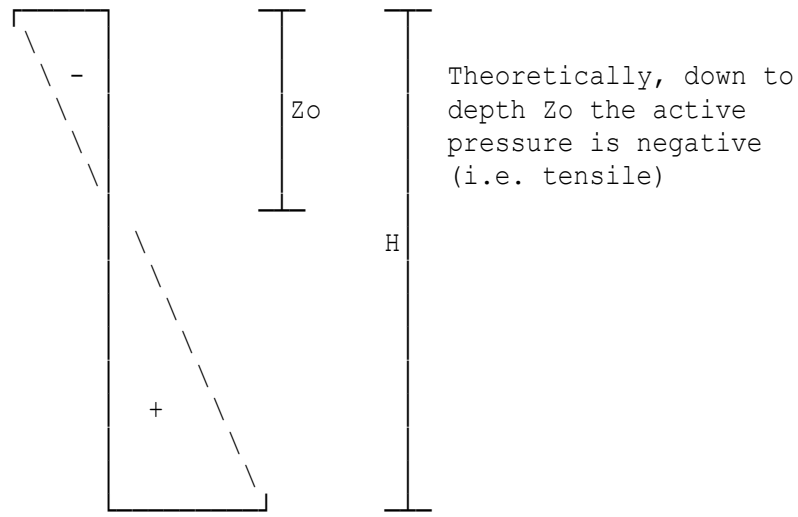

Angle of shearing resistance φ phi'=0°
Angle of friction between wall and soil delta=0°

Wedge theory will be adopted

Saturated density of soil Ds=18.5 kN/m³
Cohesion of soil c=30 kN/m²
Coefficient of wall cohesion cw=0 kN/m²
Angle of shearing resistance φ phi'=phi'=0°
Coefficient of active soil pressure Ka=(TAN(RAD(45-phi'/2)))^2=1
K1=Ka=1
Depth of tension cracks Zo=(2*c*K1^0.5-qs*Ka)/(Ds*Ka)
=-0.81081 m
As Zo is negative this will be ignored Zo=0 m
Density of water Dw=9.81 kN/m³
Horiz.force from water in tension crack Pw=0 kN

num=W+Ps+Pw*TAN(RAD(ap))-Cw-Cs*COS(RAD(a))-Cs*SIN(RAD(a))
*TAN(RAD(ap))=712
den=SIN(RAD(d))+COS(RAD(d))*TAN(RAD(ap))=1

Total active force Pa=num/den=712 kN

Summary of results derived from wedge theory

Horizontal component of active force hPa=Pa*COS(RAD(delta))=712 kN
Vertical component of active force vPa=Pa*SIN(RAD(delta))=0 kN

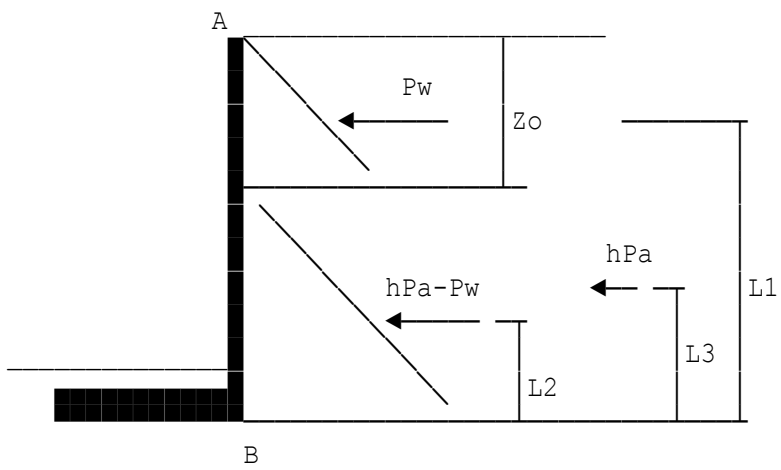

Distance L1=H-2*Zo/3=8 m
Distance L2=(H+qs/Ds-Zo)/3=4.018 m
Distance L3=(Pw*L1+(hPa-Pw)*L2)/hPa=4.018 m

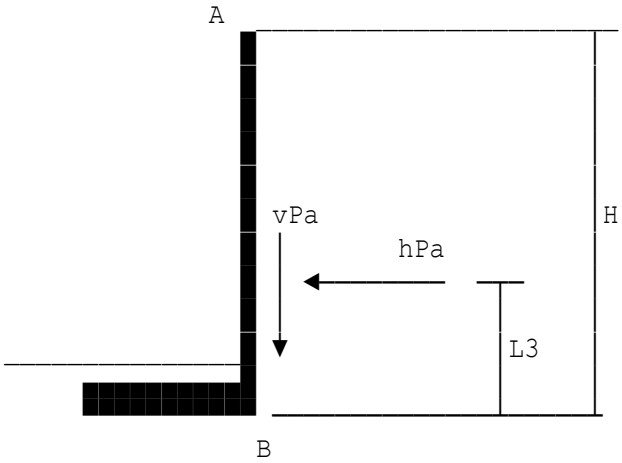

Diagram shows forces on wall due to active pressure

Copyright 1986-2024 Fitzroy Systems Ltd.

Location: Ex 7.4 Problems in Engineering soils, PL Capper/WF Cassie

Active pressure on a retaining wall to BS EN 1997-1:2004 using Coulomb's "Wedge Theory" for cohesive and cohesionless soils

Water level is assumed to be below the base of the wall.
The active pressure of cohesive soils could be evaluated using Coulomb's wedge theory. Bell's solution will be used for evaluating the depth of tension cracks (i.e. depth Zo).

Coulomb's theory assumes that there is a neutral or ineffective zone of depth (Zo) within which there is no adhesion or friction along the back of the wall or along the plane of rupture. This theory also assumes that the surface of rupture is plane. For cohesionless soils Zo will be taken as zero.

Coulomb's wedge theory takes into account two further forces acting on the wedge which have not previously been considered by "Rankine" or "Bell". These are as follows:

a) Cohesion along the failure plane;
b) Cohesion along the plane of the wall.

For cohesionless soils the above forces will be taken as zero.

It is worth pointing out that the "wedge theory" is much simpler to use for evaluating the active pressure when the soil surface is not horizontal. The back of the retaining wall will be assumed to be vertical in this program. Both cohesive and cohesionless soils can be considered using this theory.

Angle of earth surface to horizontal theta=23.2°
Height of wall under consideration H=8 m

Bell's solution

Bell gives the formula for the active clay pressure at failure on the back of the wall as follows:

pa = Ka .Ds .Z - 2 .c .Ka^0.5

where Ka is the coefficient of active clay pressure which relates to the angle " phi' " and is given by the following expression:

Ka = (TAN (45 - phi'/2))^2

By comparing two soils, one cohesive (say clay) and the other cohesionless, both having the same bulk density and angle of shearing resistance, the cohesive soil, being more self - supporting, exerts a smaller pressure on the retaining wall than does the cohesionless soil, the difference being the second component in "Bell's equation given above.

Forces on soil wedge

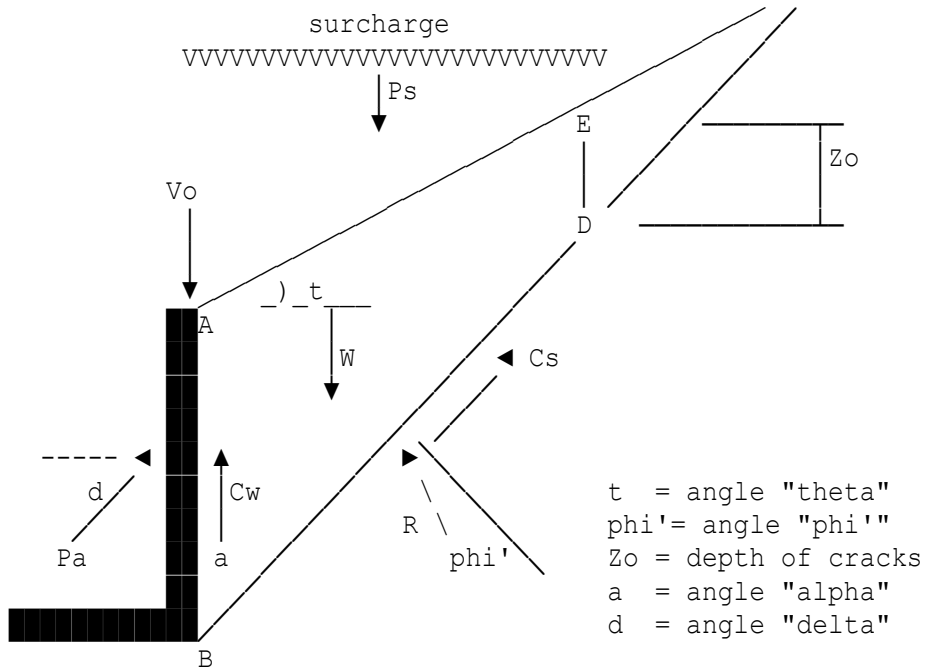

Surcharge load qs=0 kN/m²

By resolving the forces shown in the figure above in two directions the following equations can be derived:

A) Pa COS(d) + Cs SIN(a) = R COS(a + phi') + Pw
B) Pa SIN(d) + Cw - W - Ps + Cs COS(a) + R SIN(a + phi') = 0

substituting equation (A) into (B) the expression becomes

where,

Pa = total active force on the retaining wall in kN
W = weight of soil wedge in kN
Pw = horizontal force from water in tension cracks in kN
Cw = cohesion force at the back of wall (Cw = cw. length KB)
cw = coefficient of wall cohesion or adhesion at back of wall in kN/m²
Cs = cohesion force acting along failure plane (Cs = c .length BD)
c = cohesion of the soil or shear strength of soil in kN/m²
phi' = angle of internal friction (or angle of shearing resistance)
delta = angle of friction between wall and soil in degrees
alpha = angle between failure plane and the vertical in degrees
theta = angle between earth surface and horizontal in degrees
Ps = surcharge force (Ps = qs. length AE)
qs = surcharge per unit area in kN/m²

As the plane of rupture (or failure) is not known a series of trial wedges will be considered by varying angle "alpha" and the maximum value active force on the wall (Pa).

Consider the pressure distribution on a vertical wall

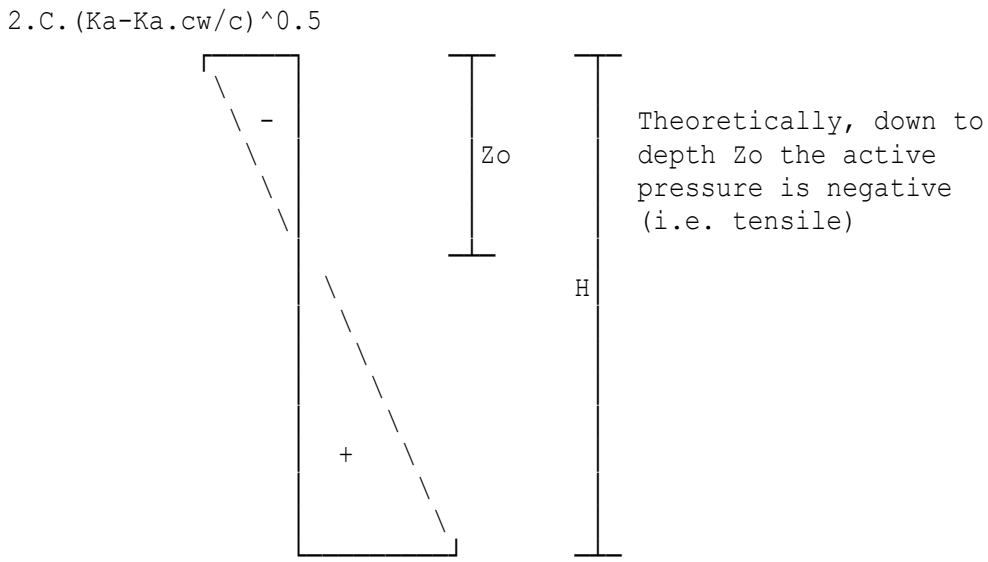

Angle of shearing resistance φ phi'=30°
Angle of friction between wall and soil delta=20°

Wedge theory will be adopted

Dry density of soil Ds=17.17 kN/m³
Cohesion of soil c=0 kN/m²
Coefficient of wall cohesion cw=0 kN/m²
Angle of shearing resistance φ phi'=phi'=30°
Coefficient of active soil pressure Ka=(TAN(RAD(45-phi'/2)))^2=0.33333
K1=Ka=0.33333
Depth of tension cracks Zo=(2*c*K1^0.5-qs*Ka)/(Ds*Ka)=0 m
Horiz.force from water in tension cracks Pw=0 kN

num=W+Ps+Pw*TAN(RAD(ap))-Cw-Cs*COS(RAD(a))-Cs*SIN(RAD(a))
*TAN(RAD(ap))=905.28
den=SIN(RAD(d))+COS(RAD(d))*TAN(RAD(ap))=3.6191

Total active force Pa=num/den=250.14 kN

Summary of results derived from wedge theory

Horizontal component of active force hPa=Pa*COS(RAD(delta))=235.05 kN
Vertical component of active force vPa=Pa*SIN(RAD(delta))=85.552 kN

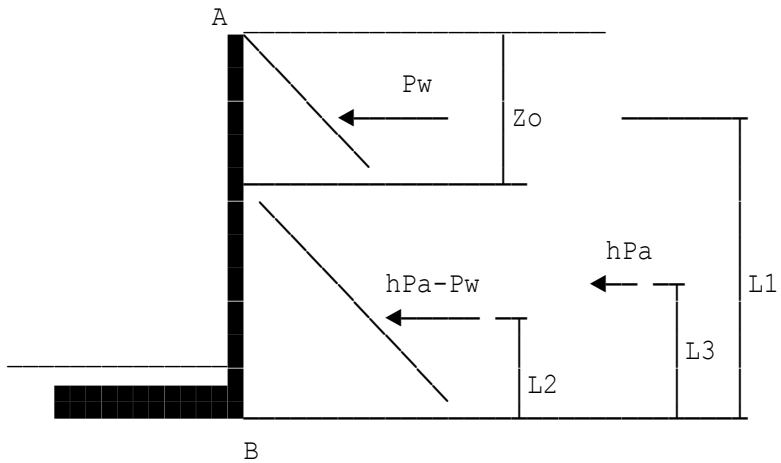

Distance L1=H-2*Zo/3=8 m
Distance L2=(H+qs/Ds-Zo)/3=2.6667 m
Distance L3=(Pw*L1+(hPa-Pw)*L2)/hPa=2.6667 m

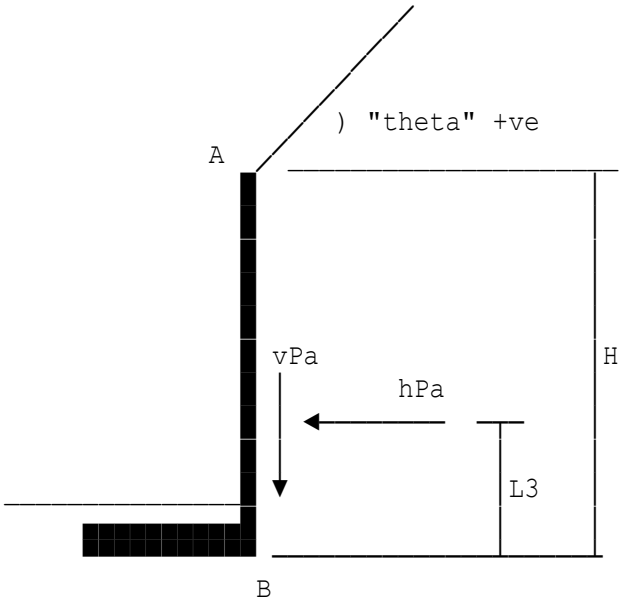

Diagram shows forces on wall due to active pressure

Location: Ex 7.5 Problems in Engineering soils, PL Capper/WF Cassie

Active pressure on a retaining wall to BS EN 1997-1:2004 using Coulomb's "Wedge Theory" for cohesive and cohesionless soils

Water level is assumed to be below the base of the wall.
Angle of earth surface to horizontal theta=0°
Height of wall under consideration H=8 m

Forces on soil wedge

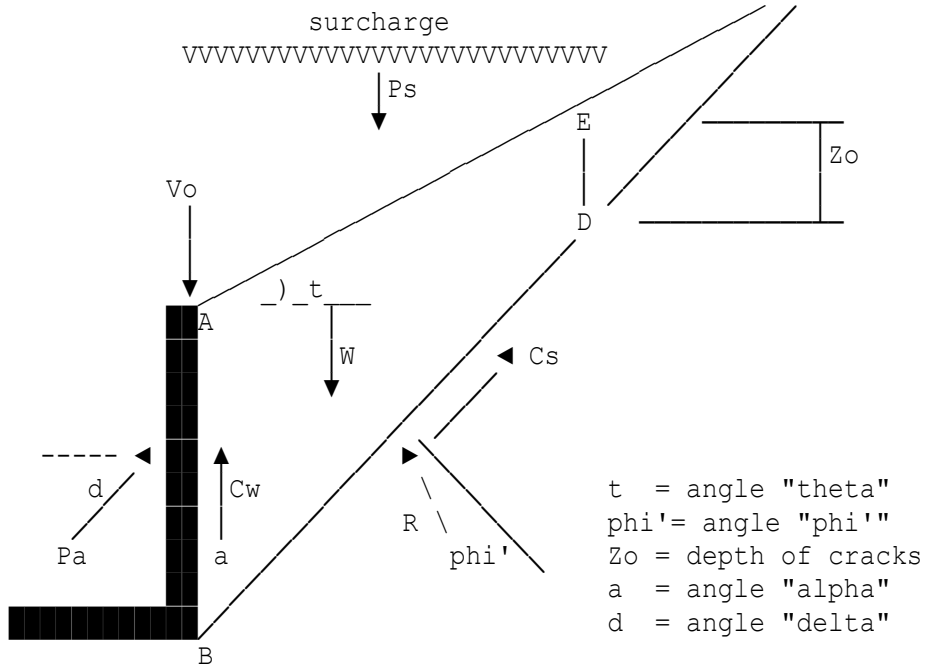

Surcharge load qs=0 kN/m²
Angle of shearing resistance φ phi'=20°
Angle of friction between wall and soil delta=0°

Wedge theory will be adopted

Dry density of soil Ds=17.17 kN/m³
Cohesion of soil c=13 kN/m²
Coefficient of wall cohesion cw=0 kN/m²
Angle of shearing resistance φ phi'=phi'=20°
Coefficient of active soil pressure Ka=(TAN(RAD(45-phi'/2)))^2=0.49029
K1=Ka=0.49029
Depth of tension cracks Zo=(2*c*K1^0.5-qs*Ka)/(Ds*Ka)=2.1626 m
Rain water in tension cracks will be ignored.
Horiz.force from water in tension crack Pw=0 kN

num=W+Ps+Pw*TAN(RAD(ap))-Cw-Cs*COS(RAD(a))-Cs*SIN(RAD(a))
*TAN(RAD(ap))=204.84
den=SIN(RAD(d))+COS(RAD(d))*TAN(RAD(ap))=1.4281

Total active force Pa=num/den=143.43 kN

Summary of results derived from wedge theory

Horizontal component of active force hPa=Pa*COS(RAD(delta))=143.43 kN
Vertical component of active force vPa=Pa*SIN(RAD(delta))=0 kN

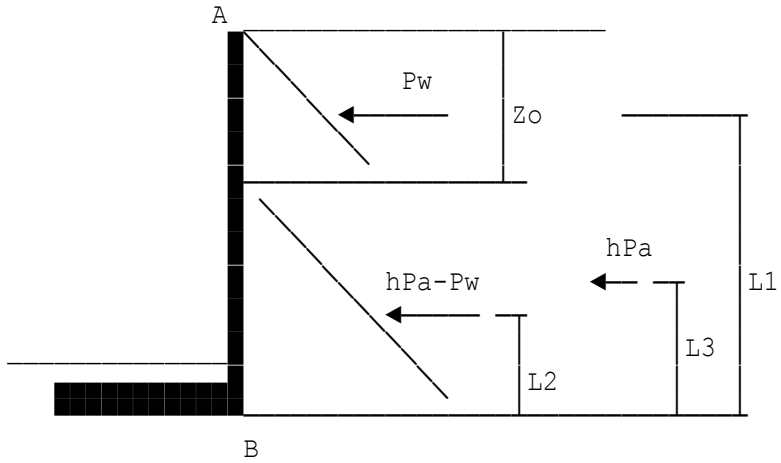

Distance L1=H-2*Zo/3=6.5583 m
Distance L2=(H+qs/Ds-Zo)/3=1.9458 m
Distance L3=(Pw*L1+(hPa-Pw)*L2)/hPa=1.9458 m

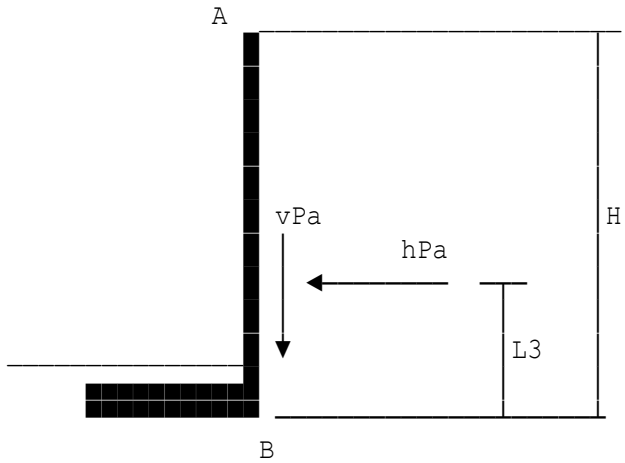

Diagram shows forces on wall due to active pressure

Location: Ex 7.8 Problems in Engineering soils, PL Capper/WF Cassie

Active pressure on a retaining wall to BS EN 1997-1:2004 using Coulomb's "Wedge Theory" for cohesive and cohesionless soils

Water level is assumed to be below the base of the wall.
Angle of earth surface to horizontal theta=0°
Height of wall under consideration H=10 m

Forces on soil wedge

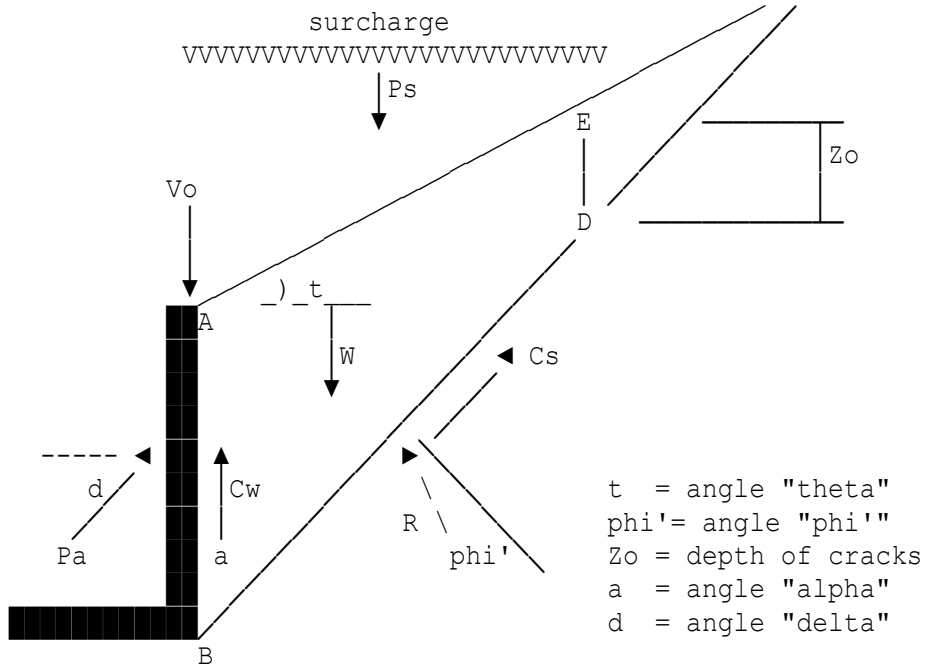

Surcharge load qs=0 kN/m²
Angle of shearing resistance φ phi'=15°
Angle of friction between wall and soil delta=15°

Wedge theory will be adopted

Dry density of soil Ds=18.6 kN/m³
Cohesion of soil c=15 kN/m²
Coefficient of wall cohesion cw=15 kN/m²
Angle of shearing resistance φ phi'=phi'=15°
Coefficient of active soil pressure Ka=(TAN(RAD(45-phi'/2)))^2=0.58879
K1=Ka+Ka*cw/c=1.1776
Depth of tension cracks Zo=(2*c*K1^0.5-qs*Ka)/(Ds*Ka)=2.9726 m
Rain water in tension cracks will be ignored.
Horiz.force from water in tension crack Pw=0 kN

num=W+Ps+Pw*TAN(RAD(ap))-Cw-Cs*COS(RAD(a))-Cs*SIN(RAD(a))
*TAN(RAD(ap))=454.42
den=SIN(RAD(d))+COS(RAD(d))*TAN(RAD(ap))=1.9319

Total active force Pa=num/den=235.23 kN

Summary of results derived from wedge theory

Horizontal component of active force hPa=Pa*COS(RAD(delta))=227.21 kN
Vertical component of active force vPa=Pa*SIN(RAD(delta))=60.881 kN

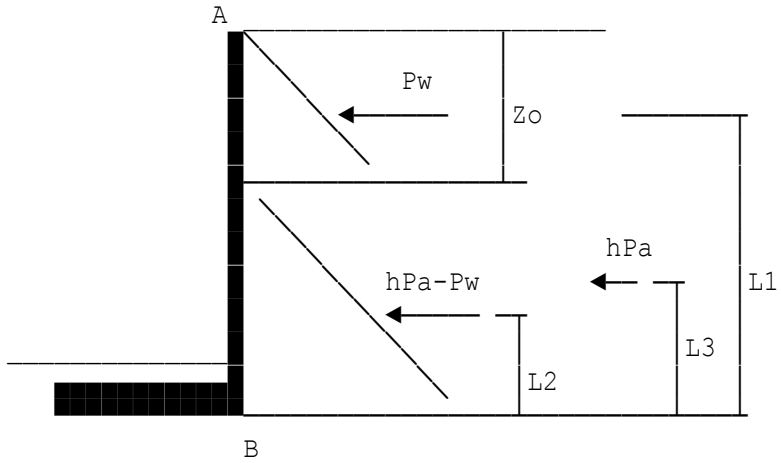

Distance L1=H-2*Zo/3=8.0182 m
Distance L2=(H+qs/Ds-Zo)/3=2.3425 m
Distance L3=(Pw*L1+(hPa-Pw)*L2)/hPa=2.3425 m

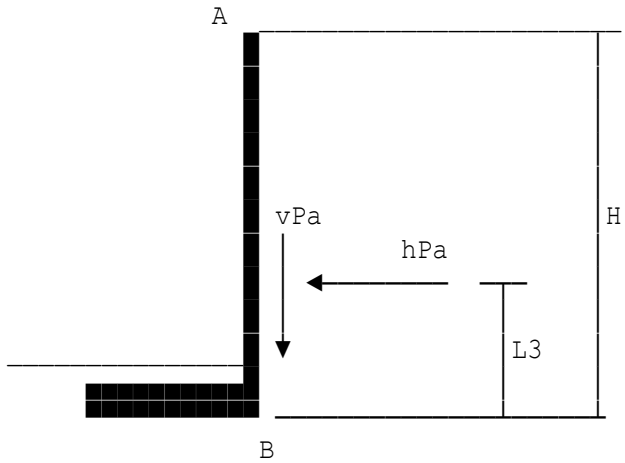

Diagram shows forces on wall due to active pressure

Location: Ex 6.4 of Soil Mechanics by RF Craig, 6th Edtn.

Active pressure on a retaining wall to BS EN 1997-1:2004 using Coulomb's "Wedge Theory" for cohesive and cohesionless soils

The angle of friction between wall and soil "delta" will be taken as zero as the soil at the top of the wall is assumed to be horizontal.

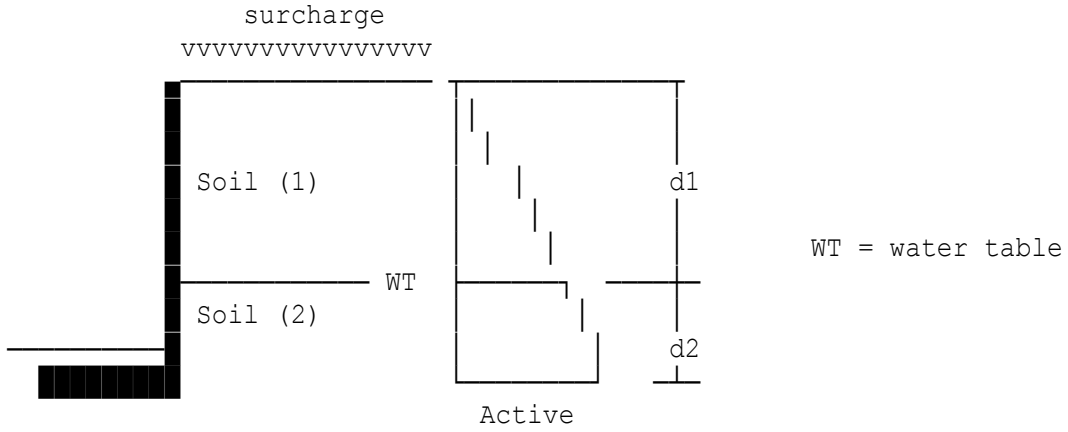

Surcharge pressure q=0 kN/m²

Design data for soil 1

Depth of soil d1=4 m
Cohesive strength of soil c1'=8 kN/m²
Coefficient of wall cohesion cw1=4 kN/m²
Angle of shearing resistance phi1'=27°
Dry unit weight of soil gam1=20 kN/m³

Design data for soil 2

Depth of soil d2=4 m
Cohesive strength of soil c2'=8 kN/m²
Coefficient of wall cohesion cw2=4 kN/m²
Angle of shearing resistance phi2'=27°
Saturated unit weight soil gam2=20 kN/m³

Depth of tension cracks Zo=(2*c1'*SQR(Kac)-q*Ka1)/(gam1*Ka1)
=1.5989 m
Active forces on wall (soil 1) P1=pat1*d1=-39.219 kN

P2=0.5*(pab1-pat1)*d1=60.084 kN

Active forces on wall (soil 2) P3=pat2*d2=80.949 kN

P4=0.5*(pab2-pat2)*d2=109.09 kN

Active force from water in crack P5=Pw=12.539 kN

Point of application of total active pressure will be at
a distance "L3" from the bottom of the wall.

L3=(P1*L1+P2*L2+P3*L3+P4*L4+P5*L5)
/Pa=2.1456 m

Summary of results

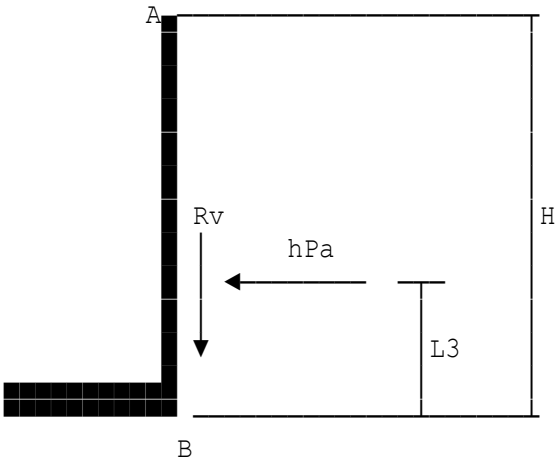

Diagram shows forces on wall and point of application

Horizontal component of active force	hPa=Pa=223.45 kN
Vertical component of active force	Rv=0 kN
Point of application of active force	L3=L3=2.1456 m

Location: Example 8.10 of 'Basic soil mechanics' by Roy Whitlow

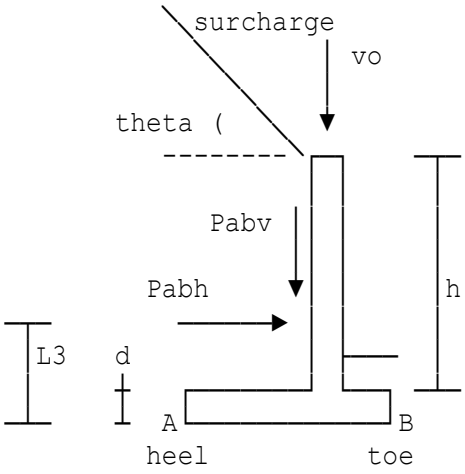

Retaining wall base to BS8002

vo = axial load on wall
d = depth of base
h = height of stem
L3 = lever arm from u/s of base
Pabh = horizontal component of active force
Pabv = vertical component of active force
theta = angle of slope of soil

Horiz.component of active force	Pabh=138.9 kN/m
Distance (as above)	L3=2.667 m
Vertical component active force	Pabv=0 kN/m
Weight/unit vol.of retained soil	w=20 kN/m³
Height of wall	h=7.25 m
Load above wall supported on stem	vo=0 kN/m
Angle of shearing resistance φ'	phi'=40°
Friction factor @ underside base	fb=0.67
Thickness of wall	t=0.3 m
Density of wall (stem)	dt=24 kN/m³
Tickness of base	d=0.75 m
Angle of slope of soil (if any)	theta=0°

Forces and moments on wall

Maximum B.M. at base of stem	M=Pabh*(L3-d)=266.27 kNm/m
Maximum S.F. at base of stem	S=Pabh=138.9 kN/m

Check bearing pressure

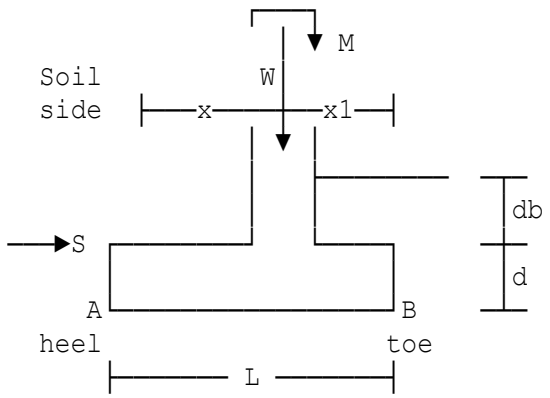

Length of base	L=5.2 m
Distance from A to centre of stem	x=3.35 m
Depth of soil over base at toe	db=0 m

Depth of soil for passive resist. dp=0 m
Allowable ground pressure p=150 kN/m²

WARNING:
Eccentricity is negative, i.e. pressure at heel (A) is greater than pressure at toe (B).

Centroid of load lies within middle third. Pressure varies from pa at A to pb at B.

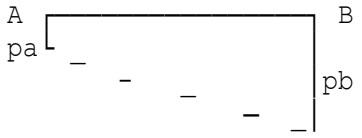

Maximum pressure is at A pmax=pa=129.34 kN/m²
As pmax ≤ p (129.34 kN/m² ≤ 150 kN/m²), the pressure beneath the base is within specified limit.

Shear forces and bending moments on base

Total S.F. on toe (plus is up) Swb=((pwb+pb)/2-dt*d)*(x1-t/2)-wf
=154.94 kN/m
Total S.F. on heel (plus is up) Swa=Sau-Sad=-131.48 kN/m
Total B.M. on toe (plus is up) Mwb=(2*pb+pwb)*(x1-t/2)^2/6-Mbd
=129.8 kNm/m
Total B.M. on heel (plus is up) Mwa=(2*pa+pwa)*(x-t/2)^2/6-Mad
=-197.69 kNm/m

Resistance to sliding

FoS sliding (frict.resist.only) FOSF=F/St=2.9414

Resistance to overturning

Rotation assumed to occur about lowest forward edge of base (i.e. toe).
Safety factors against overturning:
Including vert.comp.of pressure FOSOT1=Mr1/Mot=5.4268
Ignoring vert.comp.of pressure FOSOT2=Mr2/Mot=5.4268

Location: Example 6.5 of 'Soil mechanics' by R.F.Craig

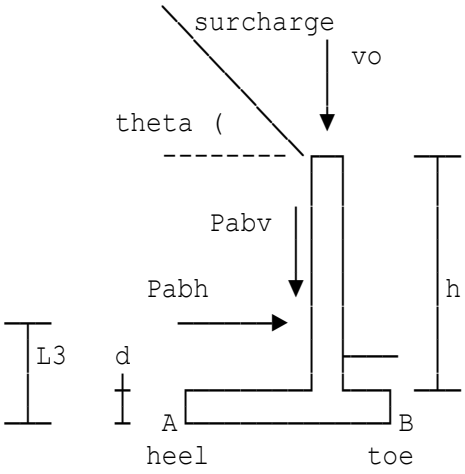

Retaining wall base to BS8002

vo = axial load on wall
d = depth of base
h = height of stem
L3 = lever arm from u/s of base
Pabh = horizontal component of active force
Pabv = vertical component of active force
theta = angle of slope of soil

Horiz.component of active force	Pabh=78.4 kN/m
Distance (as above)	L3=1.962 m
Vertical component active force	Pabv=0 kN/m
Weight/unit vol.of retained soil	w=17 kN/m³
Height of wall	h=5 m
Pressure due to surcharge	press=10 kN/m²
Load above wall supported on stem	vo=0 kN/m
Angle of shearing resistance φ'	phi'=36°
Friction factor @ underside base	fb=0.509
Thickness of wall	t=0.3 m
Density of wall (stem)	dt=23.5 kN/m³
Tickness of base	d=0.4 m
Angle of slope of soil (if any)	theta=0°

Forces and moments on wall

Maximum B.M. at base of stem	M=Pabh*(L3-d)=122.46 kNm/m
Maximum S.F. at base of stem	S=Pabh=78.4 kN/m

Check bearing pressure

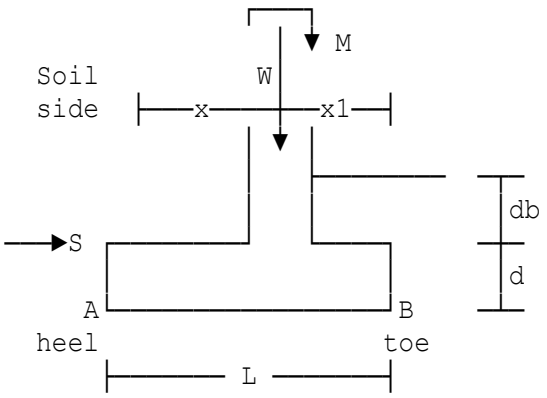

Length of base	L=3 m
Distance from A to centre of stem	x=1.9 m

Depth of soil over base at toe db=0 m
Depth of soil for passive resist. dp=0 m
Allowable ground pressure p=150 kN/m²

Centroid of load lies within middle third. Pressure varies from pa at A to pb at B.

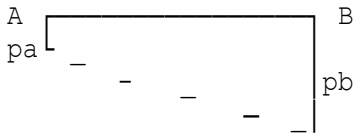

Maximum pressure is at B pmax=pb=119.24 kN/m²
As pmax ≤ p (119.24 kN/m² ≤ 150 kN/m²), the pressure beneath the base is within specified limit.

Shear forces and bending moments on base

Total S.F. on toe (plus is up) Swb=((pwb+pb)/2-dt*d)*(x1-t/2)-wf
=91.512 kN/m
Total S.F. on heel (plus is up) Swa=Sau-Sad=-79.827 kN/m
Total B.M. on toe (plus is up) Mwb=(2*pb+pwb)*(x1-t/2)^2/6-Mbd
=45.501 kNm/m
Total B.M. on heel (plus is up) Mwa=(2*pa+pwa)*(x-t/2)^2/6-Mad
=-82.555 kNm/m

Resistance to sliding

FoS sliding (frict.resist.only) FOSF=F/St=1.4913
WARNING:
Factor of safety against sliding (considering frictional resistance only) is less than 1.5.

Resistance to overturning

Rotation assumed to occur about lowest forward edge of base (i.e. toe).
Safety factors against overturning:
Including vert.comp.of pressure FOSOT1=Mr1/Mot=2.8238
Ignoring vert.comp.of pressure FOSOT2=Mr2/Mot=2.8238

Location: Example in ch 22 of "Reinforced concrete design" by Bray

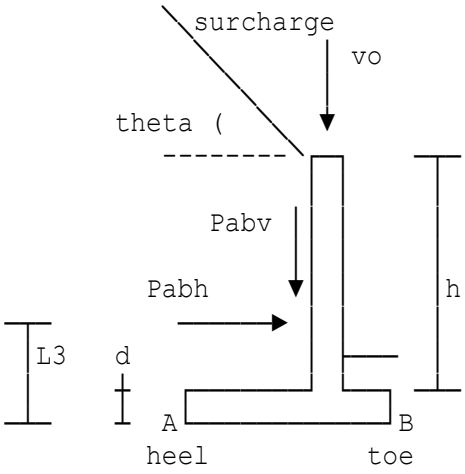

Retaining wall base to BS8002

vo = axial load on wall
d = depth of base
h = height of stem
L3 = lever arm from u/s of base
Pabh = horizontal component of active force
Pabv = vertical component of active force
theta = angle of slope of soil

Horiz.component of active force	Pabh=65.439 kN/m
Distance (as above)	L3=1.5233 m
Vertical component active force	Pabv=0 kN/m
Weight/unit vol.of retained soil	w=18.8 kN/m³
Height of wall	h=4.38 m
Load above wall supported on stem	vo=0 kN/m
Angle of shearing resistance φ'	phi'=30°
Friction factor @ underside base	fb=0.4
Thickness of wall	t=0.22 m
Density of wall (stem)	dt=24 kN/m³
Tickness of base	d=0.19 m
Angle of slope of soil (if any)	theta=0°

Forces and moments on wall

Maximum B.M. at base of stem	M=Pabh*(L3-d)=87.25 kNm/m
Maximum S.F. at base of stem	S=Pabh=65.439 kN/m

Check bearing pressure

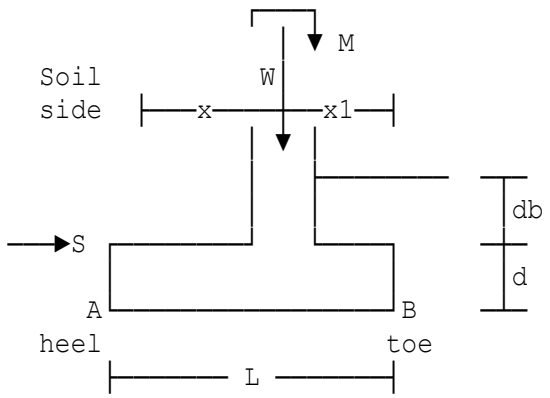

Length of base	L=3.124 m
Distance from A to centre of stem	x=1.86 m
Depth of soil over base at toe	db=0 m

Depth of soil for passive resist. dp=1.5 m
Allowable ground pressure p=75 kN/m²

Centroid of load lies within middle third. Pressure varies from pa at A to pb at B.

```
A ┌──────────────┐ B
pa└ _
      -   _
            _  _│pb
```

Maximum pressure is at B pmax=pb=62.748 kN/m²
As pmax ≤ p (62.748 kN/m² ≤ 75 kN/m²), the pressure beneath the base is within specified limit.

Shear forces and bending moments on base

Total S.F. on toe (plus is up) Swb=((pwb+pb)/2-dt*d)*(x1-t/2)-wf
=65.164 kN/m
Total S.F. on heel (plus is up) Swa=Sau-Sad=-54.009 kN/m
Total B.M. on toe (plus is up) Mwb=(2*pb+pwb)*(x1-t/2)^2/6-Mbd
=37.981 kNm/m
Total B.M. on heel (plus is up) Mwa=(2*pa+pwa)*(x-t/2)^2/6-Mad
=-48.59 kNm/m

Resistance to sliding

FoS sliding (frict.resist.only) FOSF=F/St=1.1093
WARNING:
Factor of safety against sliding (considering frictional resistance only) is less than 1.5.
FoS sliding (friction/cohesion + passive) FOSS=(F+R)/St=2.0789

Resistance to overturning

Rotation assumed to occur about lowest forward edge of base (i.e. toe).
Safety factors against overturning:
Including vert.comp.of pressure FOSOT1=Mr1/Mot=3.7676
Ignoring vert.comp.of pressure FOSOT2=Mr2/Mot=3.7676

Location: Ex1 - 'Soil mechanics' by R.F.Craig (Ex. 6.5)

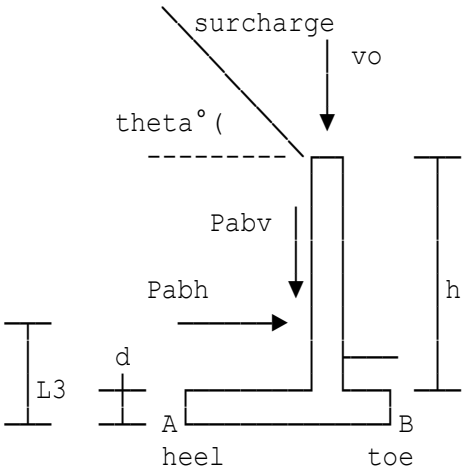

Retaining wall base to EC7

vo = axial load on wall
d = depth of base
h = height of stem
L3 = lever arm from u/s of base

Pabh and Pabv are the unfactored horizontal & vertical components of the total active force. Angle theta is the soil slope.

Lever arm (as per diagram)	L3=1.962 m
Weight/unit vol.of retained soil	w=17 kN/m³
Height of stem	h=5 m
Pressure due to surcharge	press=0 kN/m²
Load above wall supported on stem	vo=0 kN/m
Friction factor @ underside base	fb=0.509
Thickness of wall	t=0.3 m
Thickness of base	d=0.4 m
Density of wall (stem)	den=25 kN/m³
Angle of slope of soil (if any)	theta=0°

Forces and moments on wall - SLS

Maximum B.M. at base of stem	M=Pabh*(L3-d)=122.46 kNm/m
Maximum S.F. at base of stem	V=Pabh=78.4 kN/m

Check bearing pressures - SLS

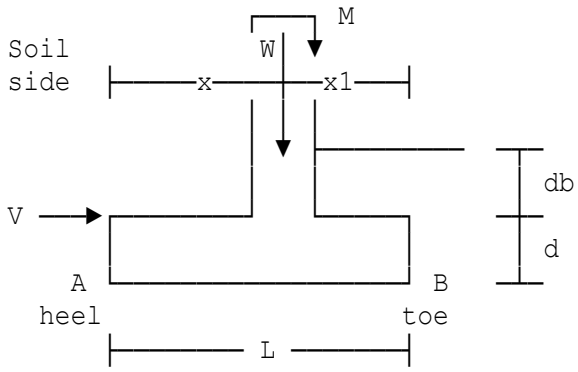

Length of base	L=3 m
Distance from A to centre of stem	x=1.9 m
Depth of soil over base at toe	db=0 m
Depth of soil for passive resist.	dp=0 m
Allowable ground pressure	p=150 kN/m²

Centroid of load lies within middle third. Pressure varies from pa at A to pb at B.

Maximum pressure is at B pmax=pb=122.65 kN/m²
As pmax ≤ p (122.65 kN/m² ≤ 150 kN/m²), the pressure beneath base is within specified limit.

Partial factors - ULS load combinations 1

Partial load factor (backfill) g1=1
Partial load factor (v.surcharge) g2=0
Partial load factor (wall & base) g3=1.35
Partial load factor (earth press) g4=1.35 (horiz.pressure)
Partial load factor (surcharge) g5=1.5 (horiz.pressure)

Forces and moments on wall - ULS load combination 1

Stem design moment MEd1=(g4*Pe+g5*Ps)*(L3-d/2)
=186.49 kNm/m
Horizontal shear at base of stem VEd1=g4*Pe+g5*Ps=105.84 kN/m

Bearing pressures - ULS load combination 1

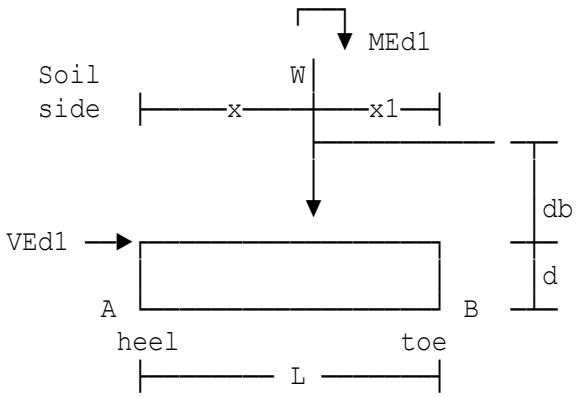

Centroid of load outside middle third giving triangular distribution of pressure.
Pressure varies from 0 at distance x from A to a maximum of pb1 at B.

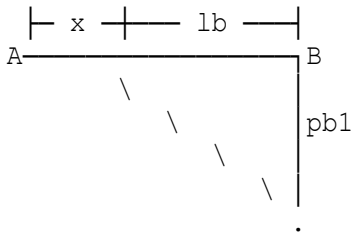

Maximum pressure is at B pmax1=pb1=170.59 kN/m²

Shear forces and bending moments on base - ULS load combination 1

Total S.F. on toe (plus is up) Swb=((pwb+pb1)/2-den*d)*(x1-t/2)-wf1
=125.19 kN/m
Total S.F. on heel (plus is up) Swa=Sau-Sad=-92.22 kN/m
Total B.M. on toe (plus is up) Mwb=(2*pb1+pwb)*(x1-t/2)^2/6-Mbd
=63.797 kNm/m
Total B.M. on heel (plus is up) Mwa=Sau*(lb-(x1+t/2))/3-Mad
=-106.91 kNm/m

Resistance to sliding - ULS (load combinations 1 & 2)

Combination 1:
Sliding force SFor=St1=105.84 kN
Frictional resistance SRes=F=110.07 kN
Thus the criterion for sliding is satisfied.

Combination 2:
Sliding force SFor=Ka2/Ka*(g7*Pe+g8*Ps)=99.987 kN
Frictional resistance SRes=F=110.07 kN
Thus the criterion for sliding is satisfied.

Resistance to overturning - ULS (load combination 1 & 2)

Combination 1:
Total restraining mt.(with Mrv) Mr1=g9*(Mre+Mrw+Mrv)=362.11 kNm/m
ditto (without Mrv) Mr2=g9*(Mre+Mrw)=362.11 kNm/m
Total overturning moment Mot=Mt1+Mt2=169.2 kNm/m

Combination 2:
Total restraining mt.(with Mrv) Mr1=g9'*(Mre+Mrw+Mrv)=362.11 kNm/m
ditto (without Mrv) Mr2=g9'*(Mre+Mrw)=362.11 kNm/m
Total overturning moment Mot=Mt1+Mt2=196.17 kNm/m

Partial factors - ULS load combinations 2

Partial load factor (backfill) g1=1.0
Partial load factor (v.surcharge) g2'=0
Partial load factor (wall & base) g3=1.0
Partial load factor (earth press) g4=1.0 (horiz.pressure)
Partial load factor (surcharge) g5=1.3 (horiz.pressure)

Forces and moments on wall - ULS load combination 2

Stem design moment MEd2=(g4*Pe+g5*Ps)*(L3-d/2)
=138.14 kNm/m
Horizontal shear at base of stem VEd2=g4*Pe+g5*Ps=78.4 kN/m

Bearing pressures - ULS load combination 2

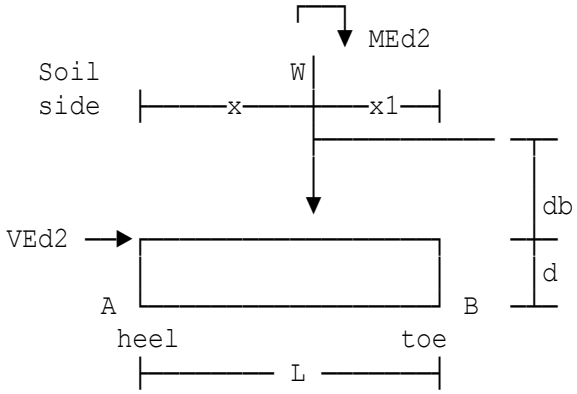

Centroid of load lies within middle third. Pressure varies from pa2 at A to pb2 at B.

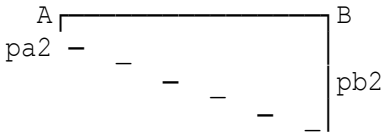

Maximum pressure is at B pmax2=pb2=122.65 kN/m²

Shear forces and bending moments on base - ULS load combination 2

Total S.F. on toe (plus is up):
Swb2=((pwb+pb2)/2-den*d)*(x1-t/2)
-wf2=91.806 kN/m

Total S.F. on heel (plus is up):
Swa2=Sau-Sad=-76.977 kN/m

Total B.M. on toe (plus is up):
Mwb2=(2*pb2+pwb)*(x1-t/2)^2/6-Mbd
=46.017 kNm/m

Total B.M. on heel (plus is up):
Mwa2=(2*pa2+pwa)*(x-t/2)^2/6-Mad
=-82.411 kNm/m

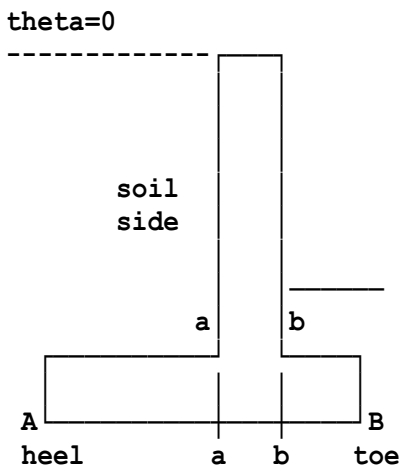

Design Summary - ULS load

combination 1 & 2 to EC7

Moment at base of stem	186.49 kNm
Shear at base of stem	105.84 kN
Moment at b-b (toe)	63.797 kNm
Shear at b-b (toe)	125.19 kN
Moment at a-a (heel)	-106.91 kNm
Shear at a-a (heel)	-92.22 kN

Pressures under base - SLS

Pressure @ A	21.515 kN/m²
Pressure @ B	122.65 kN/m²
Allowable GBP	150 kN/m²

Location: Ex2 - 'Basic soil mechanics' by Roy Whitlow (Ex. 8.10)

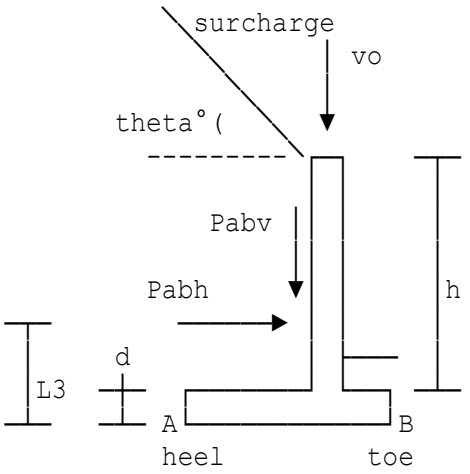

Retaining wall base to EC7

vo = axial load on wall
d = depth of base
h = height of stem
L3 = lever arm from u/s of base

Pabh and Pabv are the unfactored horizontal & vertical components of the total active force. Angle theta is the soil slope.

Lever arm (as per diagram)	L3=2.667 m
Weight/unit vol.of retained soil	w=20 kN/m³
Height of stem	h=7.25 m
Load above wall supported on stem	vo=0 kN/m
Friction factor @ underside base	fb=0.67
Thickness of wall	t=0.3 m
Thickness of base	d=0.75 m
Density of wall (stem)	den=25 kN/m³
Angle of slope of soil (if any)	theta=0°

Forces and moments on wall - SLS

Maximum B.M. at base of stem	M=Pabh*(L3-d)=266.27 kNm/m
Maximum S.F. at base of stem	V=Pabh=138.9 kN/m

Check bearing pressures - SLS

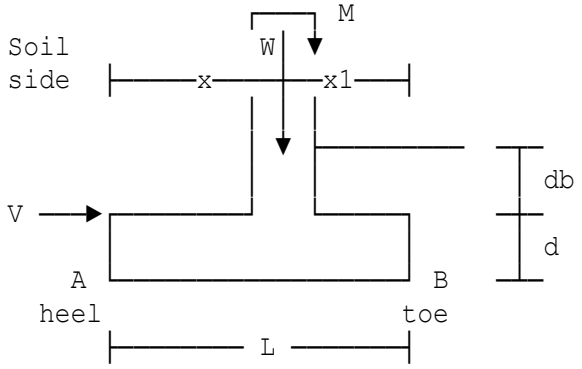

Length of base	L=5.2 m
Distance from A to centre of stem	x=3.35 m
Depth of soil over base at toe	db=0 m
Depth of soil for passive resist.	dp=0 m
Allowable ground pressure	p=150 kN/m²

WARNING:
Eccentricity is negative, i.e. pressure at heel (A) is greater than pressure at toe (B).

Centroid of load lies within middle third. Pressure varies from pa at A to pb at B.

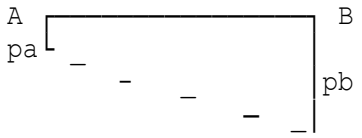

Maximum pressure is at A pmax=pa=130.15 kN/m²
As pmax ≤ p (130.15 kN/m² ≤ 150 kN/m²), the pressure beneath base is within specified limit.

Partial factors - ULS load combinations 1

Partial load factor (backfill) g1=1
Partial load factor (v.surcharge) g2=0
Partial load factor (wall & base) g3=1.35
Partial load factor (earth press) g4=1.35 (horiz.pressure)
Partial load factor (surcharge) g5=1.5 (horiz.pressure)

Forces and moments on wall - ULS load combination 1

Stem design moment MEd1=(g4*Pe+g5*Ps)*(L3-d/2)
=429.78 kNm/m
Horizontal shear at base of stem VEd1=g4*Pe+g5*Ps=187.52 kN/m

Bearing pressures - ULS load combination 1

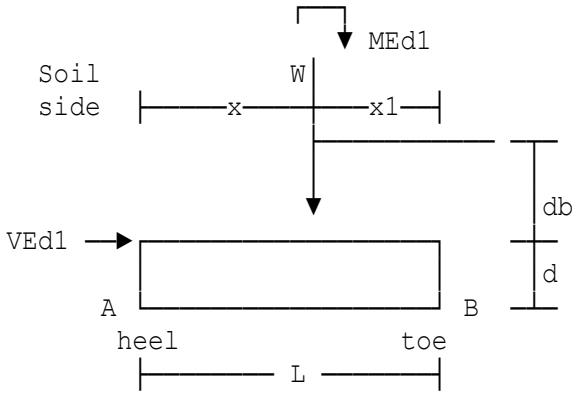

Centroid of load lies within middle third. Pressure varies from pa1 at A to pb1 at B.

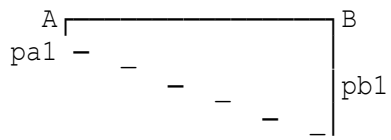

Maximum pressure is at B pmax1=pb1=148.89 kN/m²

Shear forces and bending moments on base - ULS load combination 1

Total S.F. on toe (plus is up) Swb=((pwb+pb1)/2-den*d)*(x1-t/2)-wf1
=209.99 kN/m
Total S.F. on heel (plus is up) Swa=Sau-Sad=-137.18 kN/m
Total B.M. on toe (plus is up) Mwb=(2*pb1+pwb)*(x1-t/2)^2/6-Mbd
=181.68 kNm/m
Total B.M. on heel (plus is up) Mwa=(2*pa1+pwa)*(x-t/2)^2/6-Mad
=-240.74 kNm/m

Resistance to sliding - ULS (load combinations 1 & 2)

Combination 1:
Sliding force SFor=St1=187.52 kN
Frictional resistance SRes=F=412.64 kN
Thus the criterion for sliding is satisfied.

Combination 2:
Sliding force SFor=Ka2/Ka*(g7*Pe+g8*Ps)=181.56 kN
Frictional resistance SRes=F=412.64 kN
Thus the criterion for sliding is satisfied.

Resistance to overturning - ULS (load combination 1 & 2)

Combination 1:
Total restraining mt.(with Mrv) Mr1=g9*(Mre+Mrw+Mrv)=1822 kNm/m
ditto (without Mrv) Mr2=g9*(Mre+Mrw)=1822 kNm/m
Total overturning moment Mot=Mt1+Mt2=407.49 kNm/m

Combination 2:
Total restraining mt.(with Mrv) Mr1=g9'*(Mre+Mrw+Mrv)=1822 kNm/m
ditto (without Mrv) Mr2=g9'*(Mre+Mrw)=1822 kNm/m
Total overturning moment Mot=Mt1+Mt2=484.23 kNm/m

Partial factors - ULS load combinations 2

Partial load factor (backfill) g1=1.0
Partial load factor (v.surcharge) g2'=0
Partial load factor (wall & base) g3=1.0
Partial load factor (earth press) g4=1.0 (horiz.pressure)
Partial load factor (surcharge) g5=1.3 (horiz.pressure)

Forces and moments on wall - ULS load combination 2

Stem design moment MEd2=(g4*Pe+g5*Ps)*(L3-d/2)
=318.36 kNm/m
Horizontal shear at base of stem VEd2=g4*Pe+g5*Ps=138.9 kN/m

Bearing pressures - ULS load combination 2

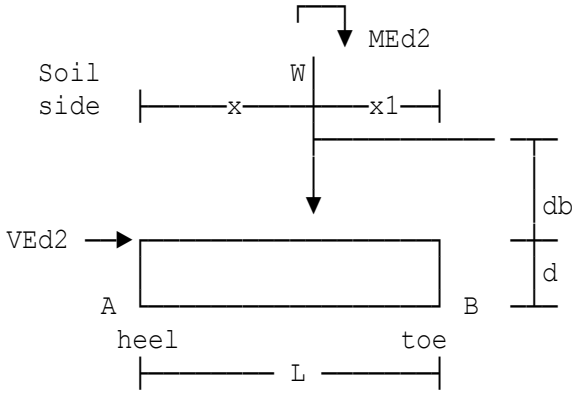

WARNING:
Eccentricity is negative, i.e. pressure at heel (A) is greater than pressure at toe (B).

Centroid of load lies within middle third. Pressure varies from pa2 at A to pb2 at B.

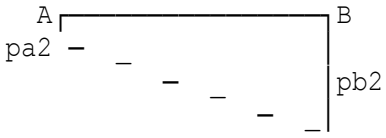

Maximum pressure is at A pmax2=pa2=130.15 kN/m²

Shear forces and bending moments on base - ULS load combination 2

Total S.F. on toe (plus is up):
Swb2=((pwb+pb2)/2-den*d)*(x1-t/2)
-wf2=156.07 kN/m
Total S.F. on heel (plus is up):
Swa2=Sau-Sad=-130.59 kN/m
Total B.M. on toe (plus is up):
Mwb2=(2*pb2+pwb)*(x1-t/2)^2/6-Mbd
=130.82 kNm/m
Total B.M. on heel (plus is up):
Mwa2=(2*pa2+pwa)*(x-t/2)^2/6-Mad
=-196.64 kNm/m

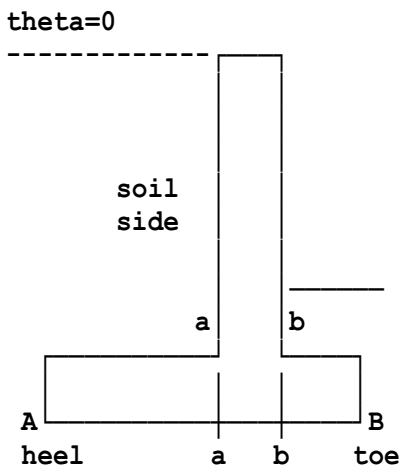

Design Summary - ULS load

combination 1 & 2 to EC7

Moment at base of stem	429.78 kNm
Shear at base of stem	187.52 kN
Moment at b-b (toe)	181.68 kNm
Shear at b-b (toe)	209.99 kN
Moment at a-a (heel)	-240.74 kNm
Shear at a-a (heel)	-137.18 kN

Pressures under base - SLS

Pressure @ A	130.15 kN/m²
Pressure @ B	106.73 kN/m²
Allowable GBP	150 kN/m²

Location: Ex3 - Chapter 22 of "Reinforced concrete design" by Bray

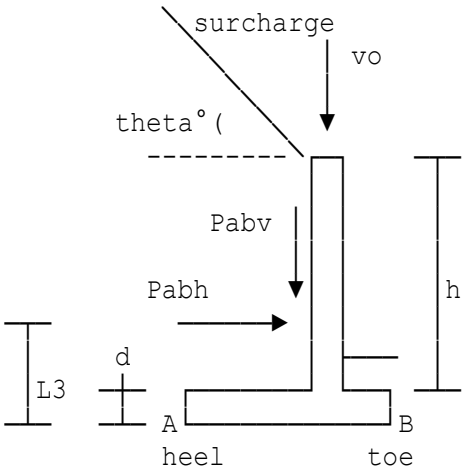

Retaining wall base to EC7

vo = axial load on wall
d = depth of base
h = height of stem
L3 = lever arm from u/s of base

Pabh and Pabv are the unfactored horizontal & vertical components of the total active force. Angle theta is the soil slope.

Lever arm (as per diagram)	L3=1.5233 m
Weight/unit vol.of retained soil	w=18.8 kN/m³
Height of stem	h=4.38 m
Load above wall supported on stem	vo=0 kN/m
Friction factor @ underside base	fb=0.4
Thickness of wall	t=0.22 m
Thickness of base	d=0.19 m
Density of wall (stem)	den=25 kN/m³
Angle of slope of soil (if any)	theta=0°

Forces and moments on wall - SLS

Maximum B.M. at base of stem	M=Pabh*(L3-d)=87.25 kNm/m
Maximum S.F. at base of stem	V=Pabh=65.439 kN/m

Check bearing pressures - SLS

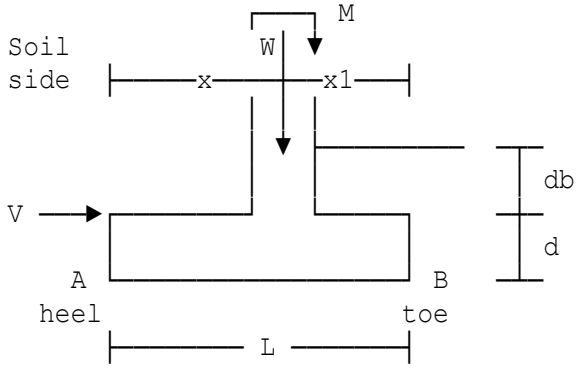

Length of base	L=3.124 m
Distance from A to centre of stem	x=1.86 m
Depth of soil over base at toe	db=0 m
Depth of soil for passive resist.	dp=1.5 m
Allowable ground pressure	p=75 kN/m²

Centroid of load lies within middle third. Pressure varies from pa at A to pb at B.

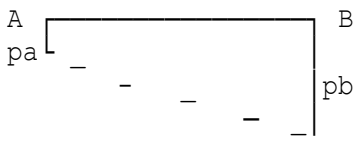

Maximum pressure is at B pmax=pb=63.423 kN/m²
As pmax ≤ p (63.423 kN/m² ≤ 75 kN/m²), the pressure beneath base is within specified limit.

Partial factors - ULS load combinations 1

Partial load factor (backfill) g1=1
Partial load factor (v.surcharge) g2=0
Partial load factor (wall & base) g3=1.35
Partial load factor (earth press) g4=1.35 (horiz.pressure)
Partial load factor (surcharge) g5=1.5 (horiz.pressure)

Forces and moments on wall - ULS load combination 1

Stem design moment MEd1=(g4*Pe+g5*Ps)*(L3-d/2)
=126.18 kNm/m
Horizontal shear at base of stem VEd1=g4*Pe+g5*Ps=88.343 kN/m

Bearing pressures - ULS load combination 1

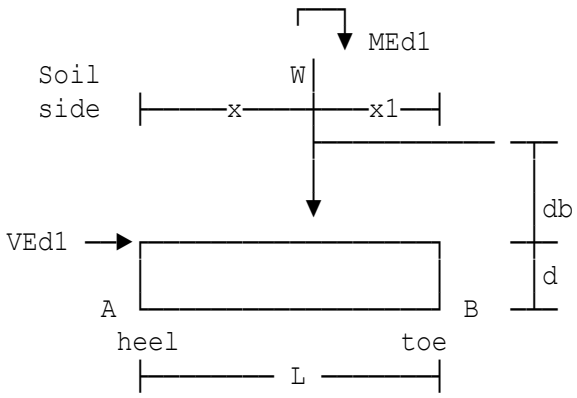

Centroid of load lies within middle third. Pressure varies from pa1 at A to pb1 at B.

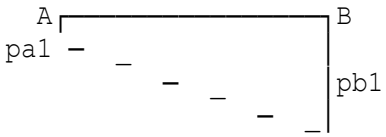

Maximum pressure is at B pmax1=pb1=90.779 kN/m²

Shear forces and bending moments on base - ULS load combination 1

```
Total S.F. on toe (plus is up)    Swb=((pwb+pb1)/2-den*d)*(x1-t/2)-wf1
                                     =87.415 kN/m
Total S.F. on heel (plus is up)   Swa=Sau-Sad=-63.671 kN/m
Total B.M. on toe (plus is up)    Mwb=(2*pb1+pwb)*(x1-t/2)^2/6-Mbd
                                     =52.72 kNm/m
Total B.M. on heel (plus is up)   Mwa=(2*pa1+pwa)*(x-t/2)^2/6-Mad
                                     =-63.67 kNm/m
```

Resistance to sliding - ULS (load combinations 1 & 2)

```
Combination 1:
Sliding force                     SFor=St1'=88.343 kN
Friction plus passive resistance  SRes=F+R=136.66 kN
Thus the criterion for sliding is satisfied.

Combination 2:
Coefficient of passive pressure   Kp'=2.4442
Sliding force                     SFor=Ka2/Ka*(g7*P1+g8*P2)=80.321 kN
Friction plus passive resistance  SRes=F+R=124.91 kN
Thus the criterion for sliding is satisfied.
```

Resistance to overturning - ULS (load combination 1 & 2)

```
Combination 1:
Total restraining mt.(with Mrv)   Mr1=g9*(Mre+Mrw+Mrv)=339.94 kNm/m
  ditto           (without Mrv)   Mr2=g9*(Mre+Mrw)=339.94 kNm/m
Total overturning moment          Mot=Mt1+Mt2=109.65 kNm/m

Combination 2:
Total restraining mt.(with Mrv)   Mr1=g9'*(Mre+Mrw+Mrv)=339.94 kNm/m
  ditto           (without Mrv)   Mr2=g9'*(Mre+Mrw)=339.94 kNm/m
Total overturning moment          Mot=Mt1+Mt2=122.35 kNm/m
```

Partial factors - ULS load combinations 2

```
Partial load factor (backfill)    g1=1.0
Partial load factor (v.surcharge) g2'=0
Partial load factor (wall & base) g3=1.0
Partial load factor (earth press) g4=1.0 (horiz.pressure)
Partial load factor (surcharge)   g5=1.3 (horiz.pressure)
```

Forces and moments on wall - ULS load combination 2

```
Stem design moment                MEd2=(g4*Pe+g5*Ps)*(L3-d/2)
                                      =93.467 kNm/m
Horizontal shear at base of stem  VEd2=g4*Pe+g5*Ps=65.439 kN/m
```

Bearing pressures - ULS load combination 2

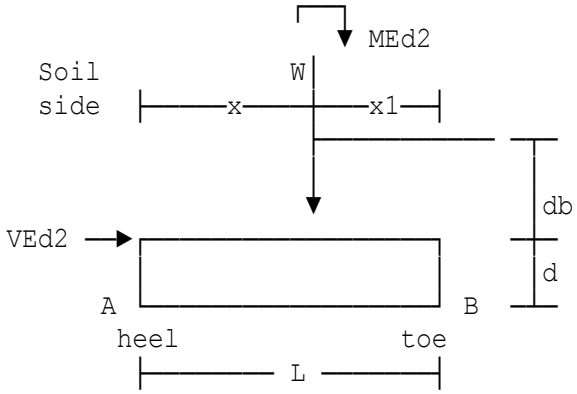

Centroid of load lies within middle third. Pressure varies from pa2 at A to pb2 at B.

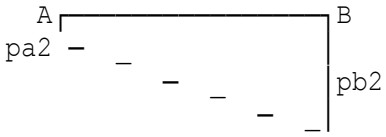

Maximum pressure is at B pmax2=pb2=63.423 kN/m²

Shear forces and bending moments on base - ULS load combination 2

Total S.F. on toe (plus is up):
Swb2=((pwb+pb2)/2-den*d)*(x1-t/2)
-wf2=65.648 kN/m

Total S.F. on heel (plus is up):
Swa2=Sau-Sad=-53.606 kN/m

Total B.M. on toe (plus is up):
Mwb2=(2*pb2+pwb)*(x1-t/2)^2/6-Mbd
=38.275 kNm/m

Total B.M. on heel (plus is up):
Mwa2=(2*pa2+pwa)*(x-t/2)^2/6-Mad
=-48.287 kNm/m

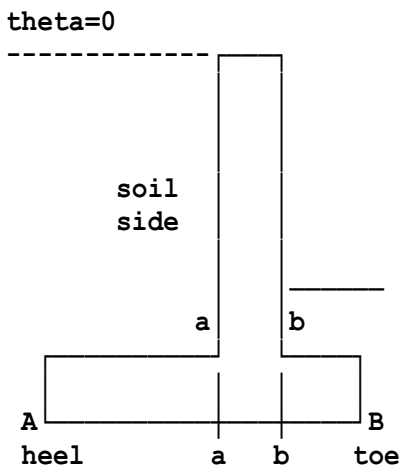

Design Summary - ULS load

combination 1 & 2 to EC7

Moment at base of stem	126.18 kNm
Shear at base of stem	88.343 kN
Moment at b-b (toe)	52.72 kNm
Shear at b-b (toe)	87.415 kN
Moment at a-a (heel)	-63.67 kNm
Shear at a-a (heel)	-63.671 kN

Pressures under base - SLS

Pressure @ A	53.754 kN/m²
Pressure @ B	63.423 kN/m²
Allowable GBP	75 kN/m²

Location: Biaxial moments on pad base

Pressures due to biaxial bending on rectangular base

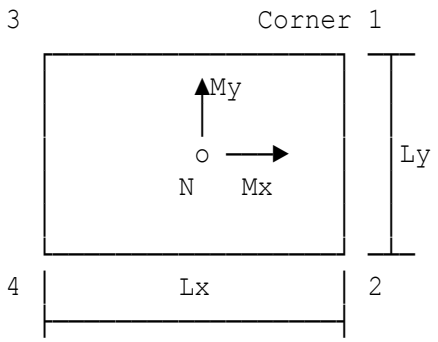

Moments Mx & My are shown in directions X & Y (rather than the more usual way of showing them acting about the axes) to accord with the references.

Base length in X-direction	Lx=6 m
Base length in Y-direction	Ly=3 m
Bending moment in X-direction	Mx=150 kNm
Bending moment in Y-direction	My=300 kNm
Axial load	N=1000 kN

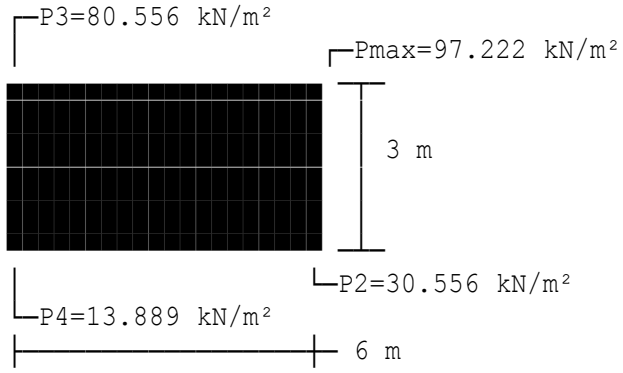

Location: Bases on grids A2-A6, K2-K6

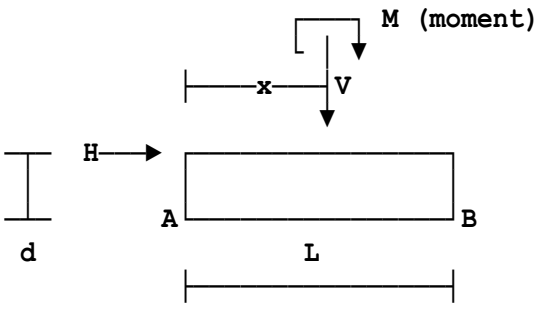

Pad base with vertical and horizontal loads (V & H) and overturning moment (M)

Characteristic bending moment	M=150 kNm
Characteristic vertical force	V=250 kN
Characteristic horizontal shear	H=50 kN
Width of base (into figure)	b=2.4 m
Depth of base	d=0.6 m
Length of base	L=3 m
Distance to load position	x=1.5 m
Allowable ground pressure	p=100 kN/m²

Overturning

Overturning moment	Mot=M+H*d=180 kNm
Restraining moment	Mre=Sw*L/2+V*(L-x)=530.52 kNm
F.O.S. against overturning	FOSOT=Mre/Mot=2.9473

Location: Bases on grids A2-A6, K2-K6

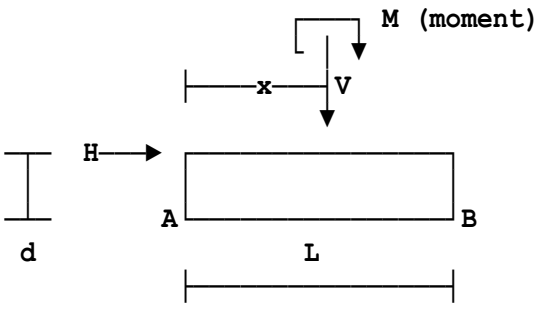

Pad base with vertical and horizontal loads (V & H) and overturning moment (M)

Characteristic bending moment	M=150 kNm
Characteristic vertical load	V=250 kN
Characteristic horizontal load	H=50 kN
Width of base (into figure)	b=2.4 m
Depth of base	d=0.6 m
Length of base	L=3 m
Distance to load position	x=1.5 m
Allowable ground pressure	p=100 kN/m²

Resistance to overturning - ULS (load combination 1 & 2)

Combination 1:

Partial load factor (vert.load)	g1=1
Partial load factor (bend.moment)	g2=1.5
Partial load factor (horiz.shear)	g3=1.5
Restraining moment	Mre=g1*(Sw*L/2+V*(L-x))=530.52 kNm
Total overturning moment	Mot=Mt1+Mt2=270 kNm/m

Combination 2:

Partial load factor (vert.load)	g4=1
Partial load factor (bend.moment)	g5=1.3
Partial load factor (horiz.shear)	g6=1.3
Restraining moment	Mre=g4*(Sw*L/2+V*(L-x))=530.52 kNm
Total overturning moment	Mot=Mt1+Mt2=234 kNm/m

Location: Automatic sizing of trapezoidal base for typical loads.

Preliminary calculations for trapezoidal combined base

Distance between columns dist=7.5 m
Thickness of base h=1 m
Left column: vertical load FVleft=580 kN
horizontal shear FHleft=150 kN
moment (clockwise) Mleft=0 kNm
Right column:vertical load FVrt=400 kN
horizontal shear FHrt=50 kN
moment (clockwise) Mrt=0 kNm
No reversal of moments so moment-reversal multiplier revm=1 throughout.
Shear-reversal multiplier revs is set to 1 when shear forces act from left to right, and to -1 when shear forces act from right to left.
Allowable bearing pressure press=80 kN/m²
Concrete density den=24 kN/m³

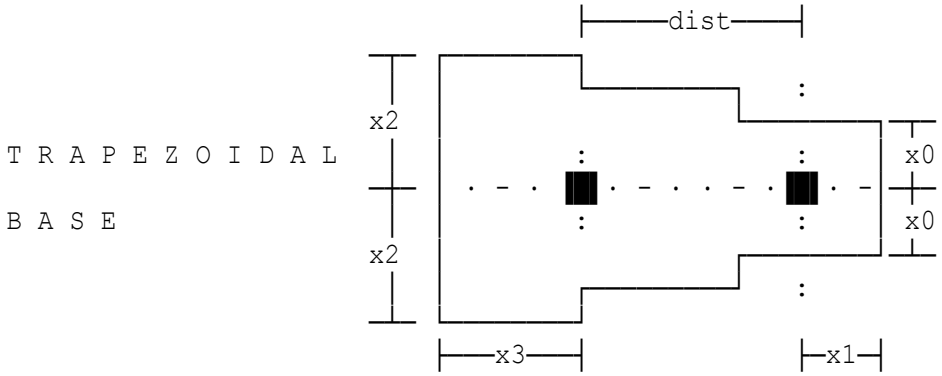

Value of dimension x0 x0=0.82 m
Value of dimension x1 x1=0.82 m
Value of dimension x2 x2=1.38 m
Value of dimension x3 x3=1.38 m
Length of base l=x1+dist+x3=9.7 m
Smaller width of base bmin=2*x0=1.64 m
Greater width of base bmax=2*x2=2.76 m
Area of base areaP=l*(bmax+bmin)/2=21.34 m²
Self-weight of base Swt=areaP*h*den=512.16 kN
Total vertical load on base V=FVleft+FVrt+Swt=1492.2 kN
Position of centroid of base xbarP=l/3*(2*x0+x2)/(x0+x2)
=4.4385 m from left end.
x'=xbarP-x3
=3.0585 m from left-hand column.
Moment of inertia of base Ixx=(x0^2+4*x0*x2+x2^2)/(x0+x2)*l^3
/18=163.71 m⁴

With clockwise moments and left to right shears

Taking moments about position of left column:
clock=FVrt*dist+revs*(FHleft+FHrt)*h+revm*(Mleft+Mrt)+Swt*x'
=4766.4 kNm
Centroid of load from left col. xbar=clock/V=3.1943 m
Eccentricity of upward pressure e=x'-xbar=-0.13583 m

Trapezoidal distribution of pressure beneath base

Pressure at left end of base Plt=V*(1/areaP+e*xbarP/Ixx)
=64.428 kN/m²
Pressure at right end of base Prt=V*(1/areaP-e*(l-xbarP)/Ixx)
=76.437 kN/m²

Dist (m) from LHE	Width (m)	Shearing force (kN) To left	Shearing force (kN) To right	Bending moment (kNm) To left	Bending moment (kNm) To right	
0	2.76	0	0	0	0	
0.97	2.648	107.6	-107.6	52.293	52.293	
1.38	2.6007	152.67	427.33	105.66	255.66	left col.
1.94	2.536	-366.23	366.23	33.483	33.483	
2.91	2.424	-261.77	261.77	-270.95	-270.95	
3.88	2.312	-159.26	159.26	-474.98	-474.98	
4.85	2.2	-58.979	58.979	-580.64	-580.64	
5.4319	2.1328	0	0	-597.75	-597.75	crit.mt.
5.82	2.088	38.824	-38.824	-590.21	-590.21	
6.79	1.976	133.88	-133.88	-506.21	-506.21	
7.76	1.864	225.94	-225.94	-331.44	-331.44	
8.73	1.752	314.73	-314.73	-68.941	-68.941	
8.88	1.7347	328.16	71.844	-20.723	29.277	right col.
9.7	1.64	0	0	0	0	

Bending moments and shears at a specific point

Dist.of point considered from left end of base x=4.85 m
Final shearing forces:
To left SL=SL-FVleft=-58.979 kN
To right SR=SR-FVrt=58.979 kN
Final bending moments:
To left ML=ML-FVleft*(x-x3)+revm*Mleft+revs
*FHleft*h=-580.64 kNm
To right MR=MR-FVrt*(l-x-x1)-revm*Mrt-revs
*FHrt*h=-580.64 kNm

With clockwise moments and right to left shears

Taking moments about position of left column:
clock=FVrt*dist+revs*(FHleft+FHrt)*h+revm*(Mleft+Mrt)+Swt*x'
=4366.4 kNm
Centroid of load from left col. xbar=clock/V=2.9263 m
Eccentricity of upward pressure e=x'-xbar=0.13223 m

Trapezoidal distribution of pressure beneath base

Pressure at left end of base Plt=V*(1/areaP+e*xbarP/Ixx)
=75.273 kN/m²
Pressure at right end of base Prt=V*(1/areaP-e*(l-xbarP)/Ixx)
=63.582 kN/m²

Dist (m) from LHE	Width (m)	Shearing force (kN) To left	Shearing force (kN) To right	Bending moment (kNm) To left	Bending moment (kNm) To right	
0	2.76	0	0	0	0	
0.97	2.648	132.96	-132.96	65.178	65.178	
1.38	2.6007	186.6	393.4	130.74	-19.26	left col.
1.94	2.536	-322.53	322.53	-219.59	-219.59	
2.91	2.424	-206.21	206.21	-475.37	-475.37	
3.88	2.312	-97.823	97.823	-622.2	-622.2	
4.8213	2.2033	0	0	-667.67	-667.67	crit.mt.
4.85	2.2	2.8763	-2.8763	-667.63	-667.63	
5.82	2.088	96.145	-96.145	-619.02	-619.02	
6.79	1.976	182.24	-182.24	-483.43	-483.43	
7.76	1.864	261.41	-261.41	-267.71	-267.71	
8.73	1.752	333.91	-333.91	21.545	21.545	
8.88	1.7347	344.54	55.456	72.431	22.431	right col.
9.7	1.64	0	0	0	0	

Bending moments and shears at a specific point

Dist.of point considered from left end of base x=4.85 m
Final shearing forces:
To left SL=SL-FVleft=2.8763 kN
To right SR=SR-FVrt=-2.8763 kN
Final bending moments:
To left ML=ML-FVleft*(x-x3)+revm*Mleft+revs *FHleft*h=-667.63 kNm
To right MR=MR-FVrt*(l-x-x1)-revm*Mrt-revs *FHrt*h=-667.63 kNm

Location: Manual check of trapezoidal base for typical loads.

Preliminary calculations for trapezoidal combined base

```
Distance between columns          dist=7.5 m
Thickness of base                 h=1 m
Left column: vertical load        FVleft=1500 kN
             horizontal shear     FHleft=400 kN
             moment (clockwise)   Mleft=50 kNm
Right column:vertical load        FVrt=400 kN
             horizontal shear     FHrt=400 kN
             moment (clockwise)   Mrt=50 kNm
No reversal of moments so moment-reversal multiplier revm=1 throughout.
Shear-reversal multiplier revs is set to 1 when shear forces act from
left to right, and to -1 when shear forces act from right to left.
Allowable bearing pressure        press=300 kN/m²
Concrete density                  den=24 kN/m³
```

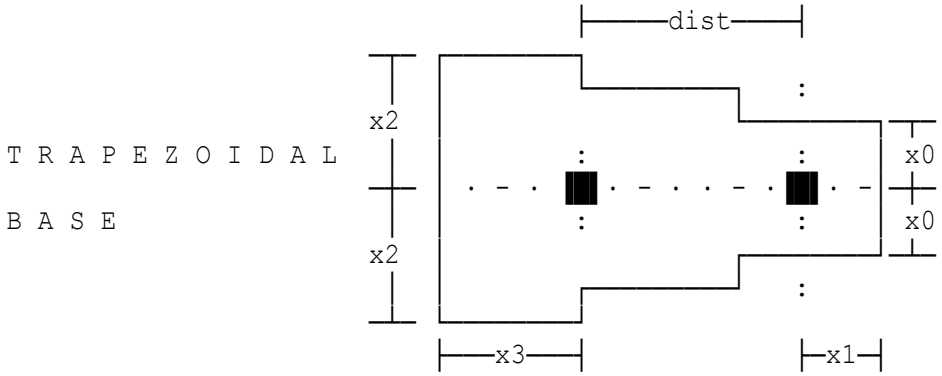


```
Value of dimension x0             x0=1 m
Value of dimension x1             x1=1 m
Value of dimension x2             x2=2 m
Value of dimension x3             x3=1 m
Length of base                    l=x1+dist+x3=9.5 m
Smaller width of base             bmin=2*x0=2 m
Greater width of base             bmax=2*x2=4 m
Area of base                      areaP=l*(bmax+bmin)/2=28.5 m²
Self-weight of base               Swt=areaP*h*den=684 kN
Total vertical load on base       V=FVleft+FVrt+Swt=2584 kN
Position of centroid of base      xbarP=l/3*(2*x0+x2)/(x0+x2)
                                       =4.2222 m from left end.
                                  x'=xbarP-x3
                                    =3.2222 m from left-hand column.
Moment of inertia of base         Ixx=(x0^2+4*x0*x2+x2^2)/(x0+x2)*l^3
                                      /18=206.41 m⁴
```

With clockwise moments and left to right shears

```
Taking moments about position of left column:
  clock=FVrt*dist+revs*(FHleft+FHrt)*h+revm*(Mleft+Mrt)+Swt*x'=6104 kNm
Centroid of load from left col.   xbar=clock/V=2.3622 m
Eccentricity of upward pressure   e=x'-xbar=0.85999 m
```

Trapezoidal distribution of pressure beneath base

Pressure at left end of base Plt=V*(1/areaP+e*xbarP/Ixx)
=136.12 kN/m²
Pressure at right end of base Prt=V*(1/areaP-e*(l-xbarP)/Ixx)
=33.844 kN/m²

Dist (m) from LHE	Width (m)	Shearing force (kN) To left	Shearing force (kN) To right	Bending moment (kNm) To left	Bending moment (kNm) To right	
0	4	0	0	0	0	
0.95	3.8	396.64	-396.64	193.01	193.01	
1	3.7895	415.92	1084.1	213.33	663.33	left col.
1.9	3.6	-763.01	763.01	-164.22	-164.22	
2.85	3.4	-475.06	475.06	-748.3	-748.3	
3.8	3.2	-235.61	235.61	-1082.2	-1082.2	
4.75	3	-40.789	40.789	-1210.1	-1210.1	
4.9794	2.9517	0	0	-1214.7	-1214.7	crit.mt.
5.7	2.8	113.3	-113.3	-1172.6	-1172.6	
6.65	2.6	230.53	-230.53	-1006.5	-1006.5	
7.6	2.4	314.8	-314.8	-745.02	-745.02	
8.5	2.2105	367.75	32.247	-436.03	13.968	right col.
8.55	2.2	-30.004	30.004	12.412	12.412	
9.5	2	0	0	0	0	

Bending moments and shears at a specific point

Dist.of point considered from left end of base x=4.75 m
Final shearing forces:
To left SL=SL-FVleft=-40.789 kN
To right SR=SR-FVrt=40.789 kN
Final bending moments:
To left ML=ML-FVleft*(x-x3)+revm*Mleft+revs
*FHleft*h=-1210.1 kNm
To right MR=MR-FVrt*(l-x-x1)-revm*Mrt-revs
*FHrt*h=-1210.1 kNm

With clockwise moments and right to left shears

Taking moments about position of left column:
clock=FVrt*dist+revs*(FHleft+FHrt)*h+revm*(Mleft+Mrt)+Swt*x'=4504 kNm
Centroid of load from left col. xbar=clock/V=1.743 m
Eccentricity of upward pressure e=x'-xbar=1.4792 m

Triangular distribution of pressure beneath base.

WARNING: Uplift occurs

Point of zero upward pressure xz=9.0918 m from left end of base.
Pressure at left end of base Plt=V/(xz*(wz+4*x2)/6)=169.07 kN/m²

Dist (m) from LHE	Width (m)	Shearing force (kN) To left	Shearing force (kN) To right	Bending moment (kNm) To left	Bending moment (kNm) To right	
0	4	0	0	0	0	
0.95	3.8	505.05	-505.05	247.13	247.13	
1	3.7895	529.14	970.86	272.99	-77.014	left col.
1.9	3.6	-577.88	577.88	-768.26	-768.26	
2.85	3.4	-242.08	242.08	-1151.6	-1151.6	
3.7205	3.2167	0	0	-1252.6	-1252.6	crit.mt.
3.8	3.2	19.162	-19.162	-1251.8	-1251.8	
4.75	3	212.56	-212.56	-1136.6	-1136.6	
5.7	2.8	344.83	-344.83	-867.32	-867.32	
6.65	2.6	422.68	-422.68	-498.71	-498.71	
7.6	2.4	452.82	-452.82	-79.335	-79.336	
8.5	2.2105	443.46	-43.463	326.54	-23.462	right col.
8.55	2.2	41.979	-41.979	-21.325	-21.326	
9.5	2	0	0	0	0	

Bending moments and shears at a specific point

Dist.of point considered from left end of base x=4.75 m
Final shearing forces:
To left SL=SL-FVleft=212.56 kN
To right SR=SR-FVrt=-212.56 kN
Final bending moments:
To left ML=ML-FVleft*(x-x3)+revm*Mleft+revs *FHleft*h=-1136.6 kNm
To right MR=MR-FVrt*(l-x-x1)-revm*Mrt-revs *FHrt*h=-1136.6 kNm

Location: Manual check of trapezoidal base w. uplift on right column

Preliminary calculations for trapezoidal combined base

```
Distance between columns          dist=7.5 m
Thickness of base                 h=1 m
Left column: vertical load        FVleft=1000 kN
             horizontal shear     FHleft=0 kN
             moment (clockwise)   Mleft=0 kNm
Right column:vertical load        FVrt=-200 kN
             horizontal shear     FHrt=0 kN
             moment (clockwise)   Mrt=0 kNm
No reversal of moments so moment-reversal multiplier revm=1 throughout.
No reversal of shears, so shear-reversal multiplier revs=1 throughout.
Allowable bearing pressure        press=200 kN/m²
Concrete density                  den=24 kN/m³
```

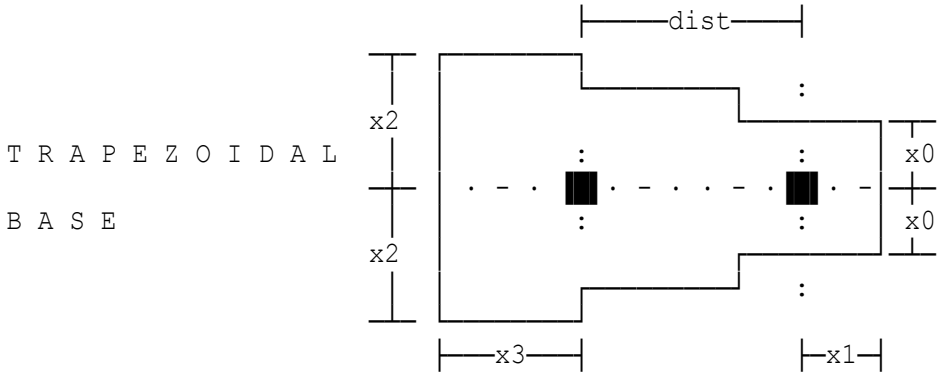

T R A P E Z O I D A L

B A S E

```
Value of dimension x0             x0=1 m
Value of dimension x1             x1=1 m
Value of dimension x2             x2=2 m
Value of dimension x3             x3=1 m
Length of base                    l=x1+dist+x3=9.5 m
Smaller width of base             bmin=2*x0=2 m
Greater width of base             bmax=2*x2=4 m
Area of base                      areaP=l*(bmax+bmin)/2=28.5 m²
Self-weight of base               Swt=areaP*h*den=684 kN
Total vertical load on base       V=FVleft+FVrt+Swt=1484 kN
Position of centroid of base      xbarP=l/3*(2*x0+x2)/(x0+x2)
                                       =4.2222 m from left end.
                                  x'=xbarP-x3
                                    =3.2222 m from left-hand column.
Moment of inertia of base         Ixx=(x0^2+4*x0*x2+x2^2)/(x0+x2)*l^3
                                      /18=206.41 m⁴
Taking moments about position of left column:
  clock=FVrt*dist+revs*(FHleft+FHrt)*h+revm*(Mleft+Mrt)+Swt*x'=704 kNm
Centroid of load from left col.   xbar=clock/V=0.47439 m
Eccentricity of upward pressure   e=x'-xbar=2.7478 m
```

Triangular distribution of pressure beneath base.

WARNING: Uplift occurs

Point of zero upward pressure xz=4.6276 m from left end of base.
Pressure at left end of base Plt=V/(xz*(wz+4*x2)/6)=174.51 kN/m²

Dist (m) from LHE	Width (m)	Shearing force (kN) To left	Shearing force (kN) To right	Bending moment (kNm) To left	Bending moment (kNm) To right	
0	4	0	0	0	0	
0.95	3.8	491.84	-491.84	246.13	246.13	
1	3.7895	513.42	486.58	271.26	271.26	left col.
1.9	3.6	-167.44	167.44	-13.362	-13.362	
2.6287	3.4466	0	0	-69.641	-69.641	crit.mt.
2.85	3.4	35.775	-35.775	-65.556	-65.556	
3.8	3.2	115.1	-115.1	15.379	15.379	
4.75	3	85	-85	118.25	118.25	
5.7	2.8	18.88	-18.88	167.23	167.23	
6.65	2.6	-42.68	42.68	155.57	155.57	
7.6	2.4	-99.68	99.68	87.584	87.584	
8.5	2.2105	-149.47	-50.526	-24.842	-24.842	right col.
8.55	2.2	47.88	-47.88	-22.382	-22.382	
9.5	2	0	0	0	0	

Bending moments and shears at a specific point

Dist.of point considered from left end of base x=4.75 m
Final shearing forces:
To left SL=SL-FVleft=85 kN
To right SR=SR-FVrt=-85 kN
Final bending moments:
To left ML=ML-FVleft*(x-x3)+revm*Mleft+revs *FHleft*h=118.25 kNm
To right MR=MR-FVrt*(l-x-x1)-revm*Mrt-revs *FHrt*h=118.25 kNm

Location: Typical calculation for optimum missing dimension.

Preliminary calculations for trapezoidal combined base

```
Distance between columns          dist=7.5 m
Thickness of base                 h=1 m
Left column: vertical load        FVleft=1450 kN
             horizontal shear     FHleft=200 kN
             moment (clockwise)   Mleft=0 kNm
Right column:vertical load        FVrt=800 kN
             horizontal shear     FHrt=200 kN
             moment (clockwise)   Mrt=0 kNm
No reversal of moments so moment-reversal multiplier revm=1 throughout.
No reversal of shears, so shear-reversal multiplier revs=1 throughout.
Allowable bearing pressure        press=200 kN/m²
Concrete density                  den=24 kN/m³
```

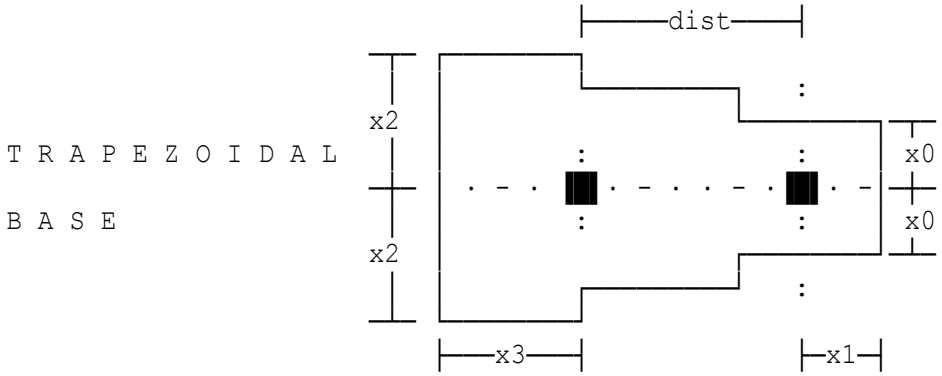

T R A P E Z O I D A L

B A S E

```
Value of dimension x0             x0=0.5 m
Value of dimension x1             x1=0.5 m
Value of dimension x2             x2=0 m
Value of dimension x3             x3=1.2 m
Value of dimension x2             x2=0.97 m
Length of base                    l=x1+dist+x3=9.2 m
Smaller width of base             bmin=2*x0=1 m
Greater width of base             bmax=2*x2=1.94 m
Area of base                      areaP=l*(bmax+bmin)/2=13.524 m²
Self-weight of base               Swt=areaP*h*den=324.58 kN
Total vertical load on base       V=FVleft+FVrt+Swt=2574.6 kN
Position of centroid of base      xbarP=l/3*(2*x0+x2)/(x0+x2)
                                       =4.1098 m from left end.
                                  x'=xbarP-x3
                                    =2.9098 m from left-hand column.
Moment of inertia of base         Ixx=(x0^2+4*x0*x2+x2^2)/(x0+x2)*l^3
                                      /18=92.139 m⁴
Taking moments about position of left column:
  clock=FVrt*dist+revs*(FHleft+FHrt)*h+revm*(Mleft+Mrt)+Swt*x'
       =7344.4 kNm
Centroid of load from left col.   xbar=clock/V=2.8527 m
Eccentricity of upward pressure   e=x'-xbar=0.057073 m
```

Trapezoidal distribution of pressure beneath base

Pressure at left end of base Plt=V*(1/areaP+e*xbarP/Ixx)
=196.92 kN/m²
Pressure at right end of base Prt=V*(1/areaP-e*(l-xbarP)/Ixx)
=182.25 kN/m²

Dist (m) from LHE	Width (m)	Shearing force (kN) To left	Shearing force (kN) To right	Bending moment (kNm) To left	Bending moment (kNm) To right	
0	1.94	0	0	0	0	
0.92	1.846	299.89	-299.89	139.29	139.29	
1.2	1.8174	387.71	1062.3	235.59	435.59	left col.
1.84	1.752	-867.54	867.54	-181.51	-181.51	
2.76	1.658	-602.03	602.03	-856.21	-856.21	
3.68	1.564	-353.33	353.33	-1294.4	-1294.4	
4.6	1.47	-121.2	121.2	-1511.4	-1511.4	
5.1081	1.4181	0	0	-1542	-1542	crit.mt.
5.52	1.376	94.637	-94.637	-1522.4	-1522.4	
6.44	1.282	294.42	-294.42	-1342.2	-1342.2	
7.36	1.188	478.4	-478.4	-985.51	-985.51	
8.28	1.094	646.85	-646.85	-466.71	-466.71	
8.7	1.0511	718.65	81.354	-179.85	20.153	right col.
9.2	1	0	0	0	0	

Bending moments and shears at a specific point

Dist.of point considered from left end of base x=4.6 m
Final shearing forces:
To left SL=SL-FVleft=-121.2 kN
To right SR=SR-FVrt=121.2 kN
Final bending moments:
To left ML=ML-FVleft*(x-x3)+revm*Mleft+revs
*FHleft*h=-1511.4 kNm
To right MR=MR-FVrt*(l-x-x1)-revm*Mrt-revs
*FHrt*h=-1511.4 kNm

Location: Automatic sizing of T-shaped base with typical loads.

Preliminary calculations for T-shaped combined base

```
Distance between columns          dist=7.5 m
Thickness of base                 h=1 m
Left column: vertical load        FVleft=580 kN
             horizontal shear(->) FHleft=150 kN
             moment (clockwise)   Mleft=0 kNm
Right column:vertical load        FVrt=400 kN
             horizontal shear(->) FHrt=50 kN
             moment (clockwise)   Mrt=0 kNm
No reversal of moments so moment-reversal multiplier revm=1 throughout.
Shear-reversal multiplier revs is set to 1 when shear forces act from
left to right, and to -1 when shear forces act from right to left.
Allowable bearing pressure        press=80 kN/m²
Concrete density                  den=24 kN/m³
```

T - S H A P E D

B A S E

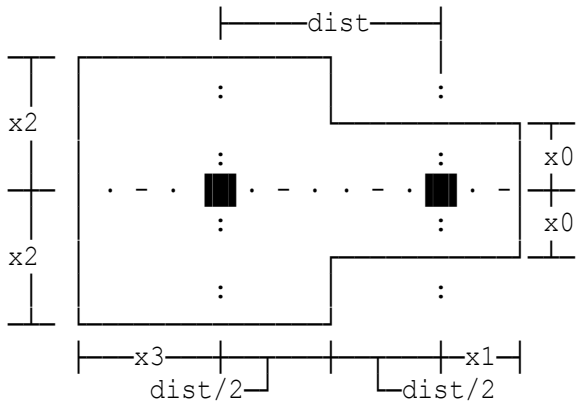


```
Value of dimension x0             x0=0.88 m
Value of dimension x1             x1=0.88 m
Value of dimension x2             x2=1.32 m
Value of dimension x3             x3=1.32 m
Length of base                    l=x1+dist+x3=9.7 m
Smaller width of base             bmin=2*x0=1.76 m
Greater width of base             bmax=2*x2=2.64 m
Area of base                      areaP=l*bmin+(bmax-bmin)*(x3+dist/2)
                                       =21.534 m²
Self-weight of base               Swt=areaP*h*den=516.81 kN
Total vertical load on base       V=FVleft+FVrt+Swt=1496.8 kN
 xbarP=((x2-x0)*(x3+dist/2)^2+x0*l^2)/(2*((x2-x0)*(x3+dist/2)+x0*l))
      =4.3703
Position of centroid of base      xbarP=4.3703 m from left end.
                                  x'=xbarP-x3
                                    =3.0503 m from left-hand column.
 Ixx=2*(x2*xbarP^3+x0*(l-xbarP)^3-(xbarP-x3-dist/2)^3*(x2-x0))/3=162.37
Moment of inertia of base         Ixx=162.37 m⁴
Dist. from left end of base to change in width x4=x3+dist/2=5.07 m
```

With clockwise moments and left to right shears

Taking moments about position of left column:
clock=FVrt*dist+revs*(FHleft+FHrt)*h+revm*(Mleft+Mrt)+Swt*x'
=4776.4 kNm
Centroid of load from left col. xbar=clock/V=3.1911 m
Eccentricity of upward pressure e=x'-xbar=-0.14074 m

Trapezoidal distribution of pressure beneath base

Pressure at left end of base Plt=V*(1/areaP+e*xbarP/Ixx)
=63.84 kN/m²
Pressure at right end of base Prt=V*(1/areaP-e*(l-xbarP)/Ixx)
=76.425 kN/m²

Dist (m) from LHE	Width (m)	Shearing force (kN) To left	Shearing force (kN) To right	Bending moment (kNm) To left	Bending moment (kNm) To right	
0	2.64	0	0	0	0	
0.97	2.64	103.63	-103.63	50.002	50.002	
1.32	2.64	141.82	438.18	92.944	242.94	left col.
1.94	2.64	-369.51	369.51	-7.5074	-7.5074	
2.91	2.64	-259.43	259.43	-312.8	-312.8	
3.88	2.64	-146.13	146.13	-509.76	-509.76	
4.85	2.64	-29.602	29.602	-595.25	-595.25	
5.1034	1.76	0	0	-598.85	-598.85	crit.mt.
5.82	1.76	59.189	-59.189	-577.71	-577.71	
6.79	1.76	141.17	-141.17	-480.71	-480.71	
7.76	1.76	225.3	-225.3	-303.15	-303.15	
8.73	1.76	311.57	-311.57	-42.94	-42.94	
8.82	1.76	319.69	80.311	-14.533	35.467	right col.
9.7	1.76	0	0	0	0	

Bending moments and shears at a specific point

Dist.of point considered from left end of base x=4.85 m
Final shearing forces:
To left SL=SL-FVleft=-29.602 kN
To right SR=SR-FVrt=29.602 kN
Final bending moments:
To left ML=ML-FVleft*(x-x3)+revm*Mleft+revs*FHleft*h=-595.25 kNm
To right MR=MR-FVrt*(l-x-x1)-revm*Mrt-revs
*FHrt*h=-595.25 kNm

With clockwise moments and right to left shears

Taking moments about position of left column:
clock=FVrt*dist+revs*(FHleft+FHrt)*h+revm*(Mleft+Mrt)+Swt*x'
=4376.4 kNm
Centroid of load from left col. xbar=clock/V=2.9239 m
Eccentricity of upward pressure e=x'-xbar=0.1265 m

Trapezoidal distribution of pressure beneath base

Pressure at left end of base Plt=V*(1/areaP+e*xbarP/Ixx)
=74.607 kN/m²
Pressure at right end of base Prt=V*(1/areaP-e*(l-xbarP)/Ixx)
=63.295 kN/m²

Dist (m) from LHE	Width (m)	Shearing force (kN) To left	Shearing force (kN) To right	Bending moment (kNm) To left	Bending moment (kNm) To right	
0	2.64	0	0	0	0	
0.97	2.64	128.14	-128.14	62.384	62.384	
1.32	2.64	173.67	406.33	115.21	-34.787	left col.
1.94	2.64	-326.61	326.61	-261.94	-261.94	
2.91	2.64	-204.25	204.25	-519.17	-519.17	
3.88	2.64	-84.8	84.8	-659.13	-659.13	
4.5833	2.64	0	0	-688.86	-688.86	crit.mt.
4.85	2.64	31.759	-31.759	-684.62	-684.62	
5.82	1.76	116.21	-116.21	-609.44	-609.44	
6.79	1.76	190.06	-190.06	-460.74	-460.74	
7.76	1.76	261.97	-261.97	-241.36	-241.36	
8.73	1.76	331.95	-331.95	46.848	46.848	
8.82	1.76	338.34	61.655	77.012	27.012	right col.
9.7	1.76	0	0	0	0	

Bending moments and shears at a specific point

Dist.of point considered from left end of base x=4.85 m
Final shearing forces:
To left SL=SL-FVleft=31.759 kN
To right SR=SR-FVrt=-31.759 kN
Final bending moments:
To left ML=ML-FVleft*(x-x3)+revm*Mleft+revs*FHleft*h=-684.62 kNm
To right MR=MR-FVrt*(l-x-x1)-revm*Mrt-revs
*FHrt*h=-684.62 kNm

Location: Manual check of T-shaped base with typical loading.

Preliminary calculations for T-shaped combined base

Distance between columns dist=7.5 m
Thickness of base h=1 m
Left column: vertical load FVleft=1500 kN
horizontal shear(->) FHleft=400 kN
moment (clockwise) Mleft=50 kNm
Right column:vertical load FVrt=400 kN
horizontal shear(->) FHrt=400 kN
moment (clockwise) Mrt=50 kNm
No reversal of moments so moment-reversal multiplier revm=1 throughout.
Shear-reversal multiplier revs is set to 1 when shear forces act from left to right, and to -1 when shear forces act from right to left.
Allowable bearing pressure press=300 kN/m²
Concrete density den=24 kN/m³

T - S H A P E D

B A S E

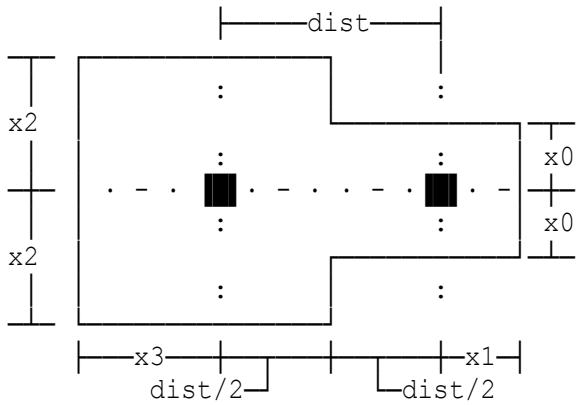

Value of dimension x0 x0=1 m
Value of dimension x1 x1=1 m
Value of dimension x2 x2=2 m
Value of dimension x3 x3=1 m
Length of base l=x1+dist+x3=9.5 m
Smaller width of base bmin=2*x0=2 m
Greater width of base bmax=2*x2=4 m
Area of base areaP=l*bmin+(bmax-bmin)*(x3+dist/2)
=28.5 m²
Self-weight of base Swt=areaP*h*den=684 kN
Total vertical load on base V=FVleft+FVrt+Swt=2584 kN
xbarP=((x2-x0)*(x3+dist/2)^2+x0*l^2)/(2*((x2-x0)*(x3+dist/2)+x0*l))
=3.9583
Position of centroid of base xbarP=3.9583 m from left end.
x'=xbarP-x3
=2.9583 m from left-hand column.
Ixx=2*(x2*xbarP^3+x0*(l-xbarP)^3-(xbarP-x3-dist/2)^3*(x2-x0))/3=196.48
Moment of inertia of base Ixx=196.48 m⁴
Dist. from left end of base to change in width x4=x3+dist/2=4.75 m

With clockwise moments and left to right shears

Taking moments about position of left column:
clock=FVrt*dist+revs*(FHleft+FHrt)*h+revm*(Mleft+Mrt)+Swt*x'
=5923.5 kNm
Centroid of load from left col. xbar=clock/V=2.2924 m
Eccentricity of upward pressure e=x'-xbar=0.66596 m

Trapezoidal distribution of pressure beneath base

Pressure at left end of base Plt=V*(1/areaP+e*xbarP/Ixx)
=125.33 kN/m²
Pressure at right end of base Prt=V*(1/areaP-e*(l-xbarP)/Ixx)
=42.131 kN/m²

Dist (m) from LHE	Width (m)	Shearing force (kN) To left	Shearing force (kN) To right	Bending moment (kNm) To left	Bending moment (kNm) To right	
0	4	0	0	0	0	
0.95	4	369.26	-369.26	177.9	177.9	
1	4	387.82	1112.2	196.83	646.83	left col.
1.9	4	-793.09	793.09	-208.41	-208.41	
2.85	4	-487.06	487.06	-813.98	-813.98	
3.8	4	-212.65	212.65	-1143.8	-1143.8	
4.625	4	0	0	-1229.9	-1229.9	crit.mt.
4.75	4	30.144	-30.144	-1228	-1228	
5.7	2	135.73	-135.73	-1148	-1148	
6.65	2	225.51	-225.51	-975.15	-975.15	
7.6	2	299.48	-299.48	-724.52	-724.52	
8.5	2	354.98	45.021	-428.95	21.051	right col.
8.55	2	-42.354	42.354	18.867	18.867	
9.5	2	0	0	0	0	

Bending moments and shears at a specific point

Dist.of point considered from left end of base x=4.75 m
Final shearing forces:
To left SL=SL-FVleft=30.144 kN
To right SR=SR-FVrt=-30.144 kN
Final bending moments:
To left ML=ML-FVleft*(x-x3)+revm*Mleft+revs*FHleft*h=-1228 kNm
To right MR=MR-FVrt*(l-x-x1)-revm*Mrt-revs
*FHrt*h=-1228 kNm

With clockwise moments and right to left shears

Taking moments about position of left column:
clock=FVrt*dist+revs*(FHleft+FHrt)*h+revm*(Mleft+Mrt)+Swt*x'
=4323.5 kNm
Centroid of load from left col. xbar=clock/V=1.6732 m
Eccentricity of upward pressure e=x'-xbar=1.2852 m

Triangular distribution of pressure beneath base.

WARNING: Uplift occurs

Point of zero upward pressure xz=9.3165 m from left end of base.
Pressure at left end of base Plt=V/(xz*x2-(x2-x0)*(xz-x4)^2/xz)
=157.61 kN/m²

Dist (m) from LHE	Width (m)	Shearing force (kN) To left	Shearing force (kN) To right	Bending moment (kNm) To left	Bending moment (kNm) To right	
0	4	0	0	0	0	
0.95	4	477.19	-477.19	231.5	231.5	
1	4	500.61	999.39	255.94	-94.056	left col.
1.9	4	-606.7	606.7	-812.68	-812.68	
2.85	4	-251.65	251.65	-1215.6	-1215.6	
3.6502	4	0	0	-1313.4	-1313.4	crit.mt.
3.8	4	42.318	-42.318	-1310.2	-1310.2	
4.75	4	275.22	-275.22	-1154.5	-1154.5	
5.7	2	361.13	-361.13	-849.82	-849.82	
6.65	2	416.51	-416.51	-478.02	-478.02	
7.6	2	441.35	-441.35	-68.118	-68.119	
8.5	2	436.72	-436.72	329.07	329.07	right col.
8.55	2	435.66	-435.66	350.88	350.88	
9.5	2	400	-400	750	750	

Bending moments and shears at a specific point

Dist.of point considered from left end of base x=4.75 m
Final shearing forces:
To left SL=SL-FVleft=275.22 kN
To right SR=SR-FVrt=-275.22 kN
Final bending moments:
To left ML=ML-FVleft*(x-x3)+revm*Mleft+revs*FHleft*h=-1154.5 kNm
To right MR=MR-FVrt*(l-x-x1)-revm*Mrt-revs
*FHrt*h=-1154.5 kNm

Location: Manual check of T-shaped base with uplift on right column.

Preliminary calculations for T-shaped combined base

```
Distance between columns          dist=7.5 m
Thickness of base                 h=1 m
Left column: vertical load        FVleft=1000 kN
             horizontal shear(->) FHleft=0 kN
             moment (clockwise)   Mleft=0 kNm
Right column:vertical load        FVrt=440 kN
             horizontal shear(->) FHrt=0 kN
             moment (clockwise)   Mrt=0 kNm
No reversal of moments so moment-reversal multiplier revm=1 throughout.
No reversal of shears so shear-reversal multiplier revs=1 throughout.
Allowable bearing pressure        press=200 kN/m²
Concrete density                  den=24 kN/m³
```

T - S H A P E D

B A S E

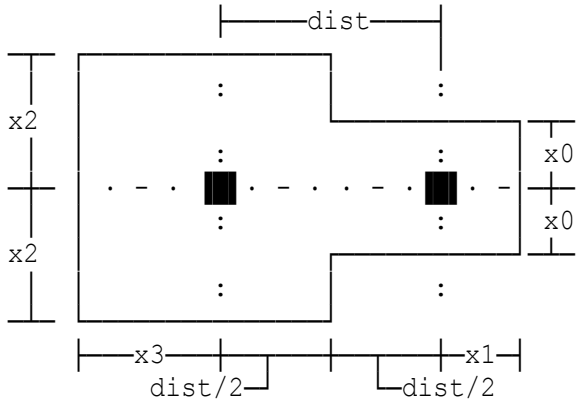


```
Value of dimension x0             x0=1 m
Value of dimension x1             x1=4 m
Value of dimension x2             x2=2 m
Value of dimension x3             x3=2 m
Length of base                    l=x1+dist+x3=13.5 m
Smaller width of base             bmin=2*x0=2 m
Greater width of base             bmax=2*x2=4 m
Area of base                      areaP=l*bmin+(bmax-bmin)*(x3+dist/2)
                                       =38.5 m²
Self-weight of base               Swt=areaP*h*den=924 kN
Total vertical load on base       V=FVleft+FVrt+Swt=2364 kN
 xbarP=((x2-x0)*(x3+dist/2)^2+x0*l^2)/(2*((x2-x0)*(x3+dist/2)+x0*l))
      =5.5925
Position of centroid of base      xbarP=5.5925 m from left end.
                                  x'=xbarP-x3
                                    =3.5925 m from left-hand column.
 Ixx=2*(x2*xbarP^3+x0*(l-xbarP)^3-(xbarP-x3-dist/2)^3*(x2-x0))/3=562.85
Moment of inertia of base         Ixx=562.85 m⁴
Dist. from left end of base to change in width x4=x3+dist/2=5.75 m
Taking moments about position of left column:
  clock=FVrt*dist+revs*(FHleft+FHrt)*h+revm*(Mleft+Mrt)+Swt*x'
       =6619.5 kNm
Centroid of load from left col.   xbar=clock/V=2.8001 m
Eccentricity of upward pressure   e=x'-xbar=0.79241 m
```

Trapezoidal distribution of pressure beneath base

Pressure at left end of base Plt=V*(1/areaP+e*xbarP/Ixx)
=80.015 kN/m²
Pressure at right end of base Prt=V*(1/areaP-e*(l-xbarP)/Ixx)
=35.085 kN/m²

Dist (m) from LHE	Width (m)	Shearing force (kN) To left	Shearing force (kN) To right	Bending moment (kNm) To left	Bending moment (kNm) To right	
0	4	0	0	0	0	
1.35	4	290.35	-290.35	198.72	198.72	
2	4	421.5	578.5	430.37	430.37	left col.
2.7	4	-443.56	443.56	73.033	73.033	
4.05	4	-201.73	201.73	-359.81	-359.81	
5.2964	4	0	0	-483.38	-483.38	crit.mt.
5.4	4	15.835	-15.835	-482.56	-482.56	
6.75	2	138.71	-138.71	-363.74	-363.74	
8.1	2	223.23	-223.23	-118.06	-118.06	
9.45	2	295.62	-295.62	233.52	233.52	
9.5	2	298.07	141.93	248.37	248.37	right col.
10.8	2	-84.123	84.123	102.65	102.65	
12.15	2	-35.996	35.996	22.932	22.932	
13.5	2	0	0	0	0	

Bending moments and shears at a specific point

Dist.of point considered from left end of base x=6.75 m
Final shearing forces:
To left SL=SL-FVleft=138.71 kN
To right SR=SR-FVrt=-138.71 kN
Final bending moments:
To left ML=ML-FVleft*(x-x3)+revm*Mleft+revs*FHleft*h=-363.74 kNm
To right MR=MR-FVrt*(l-x-x1)-revm*Mrt-revs
*FHrt*h=-363.74 kNm

Location: Typical calculation for optimum missing dimension.

Preliminary calculations for T-shaped combined base

```
Distance between columns          dist=7.5 m
Thickness of base                 h=1 m
Left column: vertical load        FVleft=1450 kN
             horizontal shear(->) FHleft=200 kN
             moment (clockwise)   Mleft=0 kNm
Right column:vertical load        FVrt=800 kN
             horizontal shear(->) FHrt=200 kN
             moment (clockwise)   Mrt=0 kNm
No reversal of moments so moment-reversal multiplier revm=1 throughout.
No reversal of shears so shear-reversal multiplier revs=1 throughout.
Allowable bearing pressure        press=200 kN/m²
Concrete density                  den=24 kN/m³
```

T - S H A P E D

B A S E

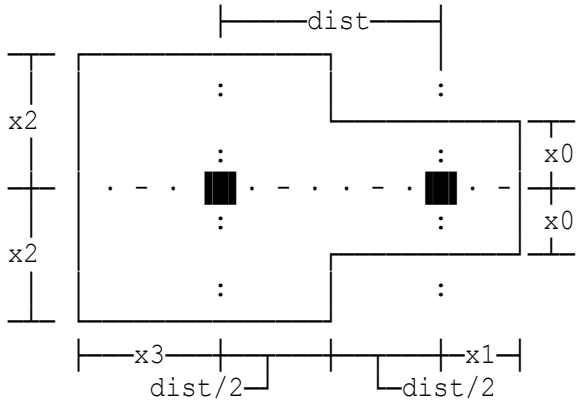


```
Value of dimension x0             x0=0.5 m
Value of dimension x1             x1=0.5 m
Value of dimension x2             x2=0 m
Value of dimension x3             x3=1.2 m
Value of dimension x2             x2=1.04 m
Length of base                    l=x1+dist+x3=9.2 m
Smaller width of base             bmin=2*x0=1 m
Greater width of base             bmax=2*x2=2.08 m
Area of base                      areaP=l*bmin+(bmax-bmin)*(x3+dist/2)
                                       =14.546 m²
Self-weight of base               Swt=areaP*h*den=349.1 kN
Total vertical load on base       V=FVleft+FVrt+Swt=2599.1 kN
 xbarP=((x2-x0)*(x3+dist/2)^2+x0*l^2)/(2*((x2-x0)*(x3+dist/2)+x0*l))
      =3.819
Position of centroid of base      xbarP=3.819 m from left end.
                                  x'=xbarP-x3
                                    =2.619 m from left-hand column.
 Ixx=2*(x2*xbarP^3+x0*(l-xbarP)^3-(xbarP-x3-dist/2)^3*(x2-x0))/3=91.075
Moment of inertia of base         Ixx=91.075 m⁴
Dist. from left end of base to change in width x4=x3+dist/2=4.95 m
Taking moments about position of left column:
  clock=FVrt*dist+revs*(FHleft+FHrt)*h+revm*(Mleft+Mrt)+Swt*x'
       =7314.3 kNm
Centroid of load from left col.   xbar=clock/V=2.8142 m
```

Eccentricity of upward pressure e=x'-xbar=-0.19515 m

Trapezoidal distribution of pressure beneath base

Pressure at left end of base Plt=V*(1/areaP+e*xbarP/Ixx)
=157.41 kN/m²
Pressure at right end of base Prt=V*(1/areaP-e*(l-xbarP)/Ixx)
=208.65 kN/m²

Dist (m) from LHE	Width (m)	Shearing force (kN) To left	Shearing force (kN) To right	Bending moment (kNm) To left	Bending moment (kNm) To right	
0	2.08	0	0	0	0	
0.92	2.08	260.2	-260.2	118.94	118.94	
1.2	2.08	341.34	1108.7	203.13	403.13	left col.
1.84	2.08	-919.79	919.79	-246.22	-246.22	
2.76	2.08	-639.98	639.98	-964.47	-964.47	
3.68	2.08	-350.37	350.37	-1420.8	-1420.8	
4.6	2.08	-50.949	50.949	-1606.1	-1606.1	
4.7537	2.08	0	0	-1610.1	-1610.1	crit.mt.
5.52	1	158.2	-158.2	-1540	-1540	
6.44	1	311.58	-311.58	-1324.2	-1324.2	
7.36	1	469.67	-469.67	-965.21	-965.21	
8.28	1	632.48	-632.48	-458.58	-458.58	
8.7	1	708.37	91.629	-177.03	22.965	right col.
9.2	1	0	0	0	0	

Bending moments and shears at a specific point

Dist.of point considered from left end of base x=4.6 m
Final shearing forces:
To left SL=SL-FVleft=-50.949 kN
To right SR=SR-FVrt=50.949 kN
Final bending moments:
To left ML=ML-FVleft*(x-x3)+revm*Mleft+revs*FHleft*h=-1606.1 kNm
To right MR=MR-FVrt*(l-x-x1)-revm*Mrt-revs
*FHrt*h=-1606.1 kNm

Location: Automatic sizing of rectangular base with typical loads

Preliminary calculations for combined rectangular base

Distance between columns	dist=7.5 m
Thickness of base	h=1 m
Left column: vertical load	FVleft=580 kN
horizontal shear	FHleft=150 kN
moment (clockwise)	Mleft=0 kNm
Right column: vertical load	FVrt=400 kN
horizontal shear	FHrt=50 kN
moment (clockwise)	Mrt=0 kNm

No reversal of moments so moment-reversal multiplier revm=1 throughout.
Shear-reversal multiplier revs is set to 1 when shear forces act from left to right, and to -1 when shear forces act from right to left.

Allowable bearing pressure	press=80 kN/m²
Concrete density	den=24 kN/m³

R E C T A N G U L A R

B A S E P O S I T I O N E D

E C C E N T R I C A L L Y

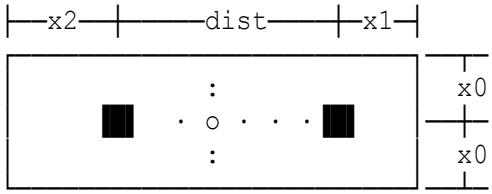

Value of dimension x0	x0=1.11 m
Value of dimension x1	x1=0.4 m
Value of dimension x2	x2=1.78 m
Length of base	l=x1+dist+x2=9.68 m
Width of base	b=2*x0=2.22 m
Area of base	area=l*b=21.49 m²
Self-weight of base	Swt=l*b*h*den=515.75 kN
Total vertical load on base	V=FVleft+FVrt+Swt=1495.8 kN
Base centroid from left column	x'=l/2-x2=3.06 m

With clockwise moments and left->right shears:

Taking moments about position of left column:
clock=FVrt*dist+(revs)*(FHleft+FHrt)*h+(revm)*(Mleft+Mrt)+Swt*x'
=4778.2 kNm

Centroid of load from left col.	xbar=clock/V=3.1945 m
Eccentricity of upward pressure	e=x'-xbar=-0.13451 m

As e<l/6, distribution of pressure beneath base is trapezoidal

Pressure at left end of base	Plt=V*(1+6*e/l)/(b*l)=63.8 kN/m²
Pressure at right end of base	Prt=V*(1-6*e/l)/(b*l)=75.407 kN/m²

Dist (m) from LHE	Shearing force (kN) To left	Shearing force (kN) To right	Bending moment (kNm) To left	Bending moment (kNm) To right	
0	0	0	0	0	
0.968	86.776	-86.776	41.798	41.798	
1.78	161.49	418.51	142.48	292.48	left col.
1.936	-403.95	403.95	228.32	228.32	
2.904	-312.19	312.19	-118.49	-118.49	
3.872	-217.93	217.93	-375.27	-375.27	
4.84	-121.18	121.18	-539.6	-539.6	
5.808	-21.931	21.931	-609.07	-609.07	
6.0187	0	0	-611.38	-611.38	crit.mt.
6.776	79.811	-79.811	-581.25	-581.25	
7.744	184.05	-184.05	-453.75	-453.75	
8.712	290.78	-290.78	-224.13	-224.13	
9.28	354.56	45.436	-40.899	9.1014	right col.
9.68	0	0	0	0	

Dist. of point considered from left end of base x=4.84 m
Final shearing forces:
To left SL=SL-FVleft=-121.18 kN
To right SR=SR-FVrt=121.18 kN
Final bending moments:
To left ML=ML-FVleft*(x-x2)+revm*Mleft+revs*FHleft*h=-539.6 kNm
To right MR=MR-FVrt*(l-x-x1)-revm*Mrt-revs
*FHrt*h=-539.6 kNm

With clockwise moments and right->left shears:

Taking moments about position of left column:
clock=FVrt*dist+(revs)*(FHleft+FHrt)*h+(revm)*(Mleft+Mrt)+Swt*x'
=4378.2 kNm
Centroid of load from left col. xbar=clock/V=2.9271 m
Eccentricity of upward pressure e=x'-xbar=0.13291 m

As e<l/6, distribution of pressure beneath base is trapezoidal

Pressure at left end of base Plt=V*(1+6*e/l)/(b*l)=75.338 kN/m²
Pressure at right end of base Prt=V*(1-6*e/l)/(b*l)=63.869 kN/m²

Dist (m) from LHE	Shearing force (kN) To left	Shearing force (kN) To right	Bending moment (kNm) To left	Bending moment (kNm) To right	
0	0	0	0	0	
0.968	109.09	-109.09	52.998	52.998	
1.78	198.7	381.3	178.08	28.078	left col.
1.936	-364.28	364.28	-30.077	-30.077	
2.904	-260.12	260.12	-332.09	-332.09	
3.872	-158.43	158.43	-534.47	-534.47	
4.84	-59.194	59.194	-639.6	-639.6	
5.4293	0	0	-656.99	-656.99	crit.mt.
5.808	37.574	-37.574	-649.87	-649.87	
6.776	131.88	-131.88	-567.65	-567.65	
7.744	223.72	-223.72	-395.35	-395.35	
8.712	313.09	-313.09	-135.33	-135.33	
9.28	364.39	35.614	57.109	7.1089	right col.
9.68	0	0	0	0	

Dist. of point considered from left end of base x=4.84 m
Final shearing forces:
To left SL=SL-FVleft=-59.194 kN
To right SR=SR-FVrt=59.194 kN
Final bending moments:
To left ML=ML-FVleft*(x-x2)+revm*Mleft+revs*FHleft*h=-639.6 kNm
To right MR=MR-FVrt*(l-x-x1)-revm*Mrt-revs
*FHrt*h=-639.6 kNm

Location: Manual check of rectangular base with typical loading

Preliminary calculations for combined rectangular base

Distance between columns	dist=7.5 m
Thickness of base	h=1 m
Left column: vertical load	FVleft=1500 kN
horizontal shear	FHleft=400 kN
moment (clockwise)	Mleft=50 kNm
Right column: vertical load	FVrt=400 kN
horizontal shear	FHrt=400 kN
moment (clockwise)	Mrt=50 kNm

No reversal of moments so moment-reversal multiplier revm=1 throughout.
Shear-reversal multiplier revs is set to 1 when shear forces act from left to right, and to -1 when shear forces act from right to left.

Allowable bearing pressure	press=300 kN/m²
Concrete density	den=24 kN/m³

R E C T A N G U L A R

B A S E P O S I T I O N E D

E C C E N T R I C A L L Y

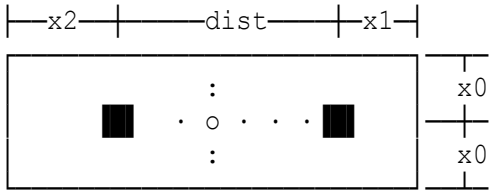

Value of dimension x0	x0=1 m
Value of dimension x1	x1=1 m
Value of dimension x2	x2=2 m
Length of base	l=x1+dist+x2=10.5 m
Width of base	b=2*x0=2 m
Area of base	area=l*b=21 m²
Self-weight of base	Swt=l*b*h*den=504 kN
Total vertical load on base	V=FVleft+FVrt+Swt=2404 kN
Base centroid from left column	x'=l/2-x2=3.25 m

With clockwise moments and left->right shears:

Taking moments about position of left column:
clock=FVrt*dist+(revs)*(FHleft+FHrt)*h+(revm)*(Mleft+Mrt)+Swt*x'
=5538 kNm

Centroid of load from left col.	xbar=clock/V=2.3037 m
Eccentricity of upward pressure	e=x'-xbar=0.94634 m

As e<l/6, distribution of pressure beneath base is trapezoidal

Pressure at left end of base	Plt=V*(1+6*e/l)/(b*l)=176.38 kN/m²
Pressure at right end of base	Prt=V*(1-6*e/l)/(b*l)=52.571 kN/m²

Dist (m) from LHE	Shearing force (kN) To left	Shearing force (kN) To right	Bending moment (kNm) To left	Bending moment (kNm) To right	
0	0	0	0	0	
1.05	307	-307	163.45	163.45	
2	562.36	937.64	578.08	1028.1	left col.
2.1	-912	912	935.6	935.6	
3.15	-657	657	114.15	114.15	
4.2	-428	428	-453.2	-453.2	
5.25	-225	225	-793.75	-793.75	
6.3	-48	48	-934.8	-934.8	
6.6148	0	0	-942.29	-942.29	crit.mt.
7.35	103	-103	-903.65	-903.65	
8.4	228	-228	-727.6	-727.6	
9.45	327	-327	-433.95	-433.95	
9.5	331.07	68.934	-417.5	32.502	right col.
10.5	0	0	0	0	

Dist. of point considered from left end of base x=5.25 m
Final shearing forces:
  To left SL=SL-FVleft=-225 kN
  To right SR=SR-FVrt=225 kN
Final bending moments:
  To left ML=ML-FVleft*(x-x2)+revm*Mleft+revs*FHleft*h=-793.75 kNm
  To right MR=MR-FVrt*(l-x-x1)-revm*Mrt-revs
*FHrt*h=-793.75 kNm

With clockwise moments and right->left shears:

Taking moments about position of left column:
clock=FVrt*dist+(revs)*(FHleft+FHrt)*h+(revm)*(Mleft+Mrt)+Swt*x'
=3938 kNm
Centroid of load from left col. xbar=clock/V=1.6381 m
Eccentricity of upward pressure e=x'-xbar=1.6119 m

As e<l/6, distribution of pressure beneath base is trapezoidal

Pressure at left end of base Plt=V*(1+6*e/l)/(b*l)=219.92 kN/m²
Pressure at right end of base Prt=V*(1-6*e/l)/(b*l)=9.034 kN/m²

Dist (m) from LHE	Shearing force (kN) To left	Shearing force (kN) To right	Bending moment (kNm) To left	Bending moment (kNm) To right	
0	0	0	0	0	
1.05	389.29	-389.29	208.25	208.25	
2	703.34	796.66	730.12	380.12	left col.
2.1	-765.71	765.71	302	302	
3.15	-465	465	-340.25	-340.25	
4.2	-208.57	208.57	-690	-690	
5.2303	0	0	-793.79	-793.79	crit.mt.
5.25	3.5714	-3.5714	-793.75	-793.75	
6.3	171.43	-171.43	-698	-698	
7.35	295	-295	-449.25	-449.25	
8.4	374.29	-374.29	-94	-94	
9.45	409.29	-409.29	321.25	321.25	
9.5	409.85	-9.8477	341.73	-8.2712	right col.
10.5	0	0	0	0	

Dist. of point considered from left end of base x=5.25 m
Final shearing forces:
To left SL=SL-FVleft=3.5714 kN
To right SR=SR-FVrt=-3.5714 kN
Final bending moments:
To left ML=ML-FVleft*(x-x2)+revm*Mleft+revs*FHleft*h=-793.75 kNm
To right MR=MR-FVrt*(l-x-x1)-revm*Mrt-revs
*FHrt*h=-793.75 kNm

Copyright 1986-2024 Fitzroy Systems Ltd.

Location: Manual check of rectangular base w. uplift on right column

Preliminary calculations for combined rectangular base

Distance between columns dist=7.5 m
Thickness of base h=1 m
Left column: vertical load FVleft=1000 kN
horizontal shear FHleft=0 kN
moment (clockwise) Mleft=0 kNm
Right column:vertical load FVrt=-150 kN
horizontal shear FHrt=0 kN
moment (clockwise) Mrt=0 kNm
No reversal of moments so moment-reversal multiplier revm=1 throughout.
No reversal of shears, so shear-reversal multiplier revs=1 throughout.
Allowable bearing pressure press=200 kN/m²
Concrete density den=24 kN/m³

R E C T A N G U L A R

B A S E P O S I T I O N E D

E C C E N T R I C A L L Y

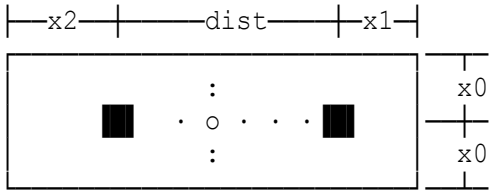

Value of dimension x0 x0=1 m
Value of dimension x1 x1=1 m
Value of dimension x2 x2=2 m
Length of base l=x1+dist+x2=10.5 m
Width of base b=2*x0=2 m
Area of base area=l*b=21 m²
Self-weight of base Swt=l*b*h*den=504 kN
Total vertical load on base V=FVleft+FVrt+Swt=1354 kN
Base centroid from left column x'=l/2-x2=3.25 m
Taking moments about position of left column:
clock=FVrt*dist+(revs)*(FHleft+FHrt)*h+(revm)*(Mleft+Mrt)+Swt*x'
=513 kNm
Centroid of load from left col. xbar=clock/V=0.37888 m
Eccentricity of upward pressure e=x'-xbar=2.8711 m

As e>=l/6, distribution of pressure beneath base is triangular

•••WARNING:Uplift occurs beneath base•••
Point of zero upward pressure xz=3*(l/2-e)
=7.1366 m from left end of base.
Pressure at left end of base Plt=V/(x0*xz)=189.73 kN/m²

Dist (m) from LHE	Shearing force (kN) To left	Shearing force (kN) To right	Bending moment (kNm) To left	Bending moment (kNm) To right	
0	0	0	0	0	
1.05	318.71	-318.71	172.45	172.45	
2	556.56	443.44	592.01	592.01	left col.
2.1	-421.19	421.19	548.78	548.78	
3.15	-219.72	219.72	217.43	217.43	
4.2	-76.862	76.862	66.859	66.859	
5.25	7.3749	-7.3749	35.508	35.508	
6.3	32.992	-32.992	61.829	61.829	
7.35	1.2	-1.2	84.36	84.36	
8.4	-49.2	49.2	59.16	59.16	
9.45	-99.6	99.6	-18.96	-18.96	
9.5	-102	-48	-24	-24	right col.
10.5	0	0	0	0	

Dist. of point considered from left end of base x=5.25 m
Final shearing forces:
To left SL=SL-FVleft=7.3749 kN
To right SR=SR-FVrt=-7.3749 kN
Final bending moments:
To left ML=ML-FVleft*(x-x2)+revm*Mleft+revs*FHleft*h=35.508 kNm
To right MR=MR-FVrt*(l-x-x1)-revm*Mrt-revs
*FHrt*h=35.508 kNm

Location: Optimum calculation for missing dimension for Example 2

Preliminary calculations for combined rectangular base

```
Distance between columns          dist=7.5 m
Thickness of base                 h=1 m
Left column: vertical load        FVleft=1500 kN
             horizontal shear     FHleft=0 kN
             moment (clockwise)   Mleft=0 kNm
Right column:vertical load        FVrt=400 kN
             horizontal shear     FHrt=0 kN
             moment (clockwise)   Mrt=0 kNm
No reversal of moments so moment-reversal multiplier revm=1 throughout.
No reversal of shears, so shear-reversal multiplier revs=1 throughout.
Allowable bearing pressure        press=100 kN/m²
Concrete density                  den=24 kN/m³
```

R E C T A N G U L A R

B A S E P O S I T I O N E D

E C C E N T R I C A L L Y

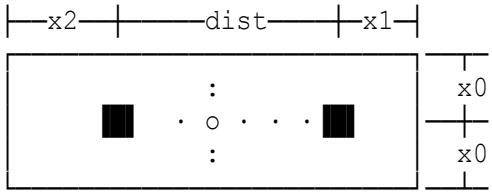


```
Value of dimension x0             x0=1 m
Value of dimension x1             x1=1 m
Value of dimension x2             x2=5.35 m
Length of base                    l=x1+dist+x2=13.85 m
Width of base                     b=2*x0=2 m
Area of base                      area=l*b=27.7 m²
Self-weight of base               Swt=l*b*h*den=664.8 kN
Total vertical load on base       V=FVleft+FVrt+Swt=2564.8 kN
Base centroid from left column    x'=l/2-x2=1.575 m
Taking moments about position of left column:
 clock=FVrt*dist+(revs)*(FHleft+FHrt)*h+(revm)*(Mleft+Mrt)+Swt*x'
      =4047.1 kNm
Centroid of load from left col.   xbar=clock/V=1.5779 m
Eccentricity of upward pressure   e=x'-xbar=-0.0029242 m
```

As e<l/6, distribution of pressure beneath base is trapezoidal

```
Pressure at left end of base      Plt=V*(1+6*e/l)/(b*l)=92.475 kN/m²
Pressure at right end of base     Prt=V*(1-6*e/l)/(b*l)=92.709 kN/m²
```

Dist (m) from LHE	Shearing force (kN) To left	Shearing force (kN) To right	Bending moment (kNm) To left	Bending moment (kNm) To right	
0	0	0	0	0	
1.385	189.71	-189.71	131.37	131.37	
2.77	379.48	-379.48	525.52	525.52	
4.155	569.32	-569.32	1182.6	1182.6	
5.35	733.16	766.84	1960.8	1960.8	left col.
5.54	-740.78	740.78	1817.6	1817.6	
6.925	-550.81	550.81	923.13	923.13	
8.31	-360.78	360.78	291.84	291.84	
9.695	-170.68	170.68	-76.205	-76.205	
10.938	0	0	-182.3	-182.3	crit.mt.
11.08	19.48	-19.48	-180.92	-180.92	
12.465	209.71	-209.71	-22.215	-22.215	
12.85	262.6	137.4	68.704	68.704	right col.
13.85	0	0	0	0	

Dist. of point considered from left end of base x=6.925 m
Final shearing forces:
To left SL=SL-FVleft=-550.81 kN
To right SR=SR-FVrt=550.81 kN
Final bending moments:
To left ML=ML-FVleft*(x-x2)+revm*Mleft+revs*FHleft*h=923.13 kNm
To right MR=MR-FVrt*(l-x-x1)-revm*Mrt-revs
*FHrt*h=923.13 kNm

Location: Heavy load on left base: no moment or shear reversal

Tied bases

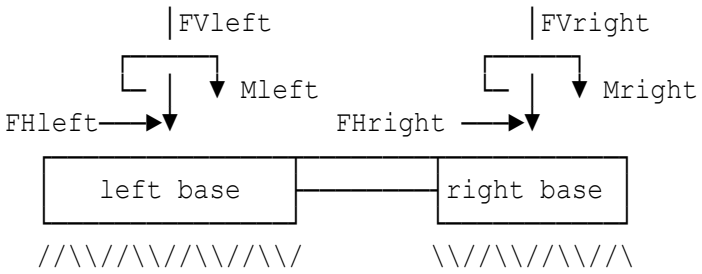

If pairs of bases supporting a trestle, gantry or similar structure are subjected to moments and horizontal shearing forces acting in the same sense on each base simultaneously, by linking the pairs of bases by tie beams the bases are relieved of the effects resulting from eccentricity and may be then designed as concentrically loaded. In such a case the size, flexibility and arrangement of the tie beam must be such that it does not provide load support itself nor does it transmit load from one base to the other. To reduce the risk of differential settlement, the bases must also be so dimensioned that the bearing pressure beneath each is similar under all possible loading conditions. If the applied moments and/or the horizontal shearing forces can reverse in direction, remember to check these situations also.

Distance between column centres	dist=5.5 m
Concrete density	den=24 kN/m³
Width	bleft=4 m
Length	lleft=2 m
Depth	hleft=0.8 m
Vertical applied load	FVleft=4500 kN
Horizontal load (left to right)	FHleft=100 kN
Applied moment (clockwise)	Mleft=50 kNm
Width	bright=4 m
Length	lright=2 m
Depth	hright=0.8 m
Vertical applied load	FVright=1000 kN
Horizontal load (left to right)	FHright=100 kN
Applied moment (clockwise)	Mright=50 kNm

No reversal of moments or shearing forces

Moment at centreline of left base BMleft=-(Mleft+FHleft*hleft)=-130 kNm
Moment at centreline of right base BMright=Mright+FHright*hright=130 kNm
BM at left end of connecting beam:
Mlend=BMleft-(BMleft-BMright)*lleft/(2*dist)
=-82.727 kNm
BM at right end of connecting beam:
Mrend=BMright+(BMleft-BMright)*lright/(2*dist)
=82.727 kNm
Shear force on connecting beam Sbeam=(-BMleft+BMright)/dist
=47.273 kN

Location: Same as Example No.1 but with moment and shear reversal

Tied bases

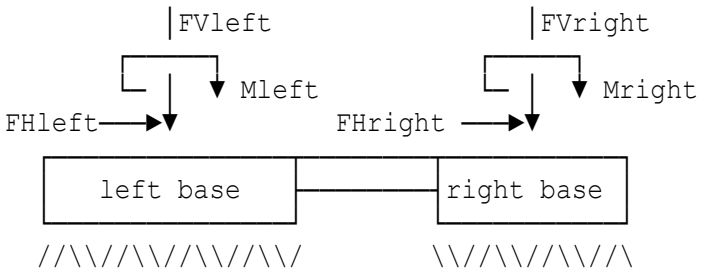

If pairs of bases supporting a trestle, gantry or similar structure are subjected to moments and horizontal shearing forces acting in the same sense on each base simultaneously, by linking the pairs of bases by tie beams the bases are relieved of the effects resulting from eccentricity and may be then designed as concentrically loaded. In such a case the size, flexibility and arrangement of the tie beam must be such that it does not provide load support itself nor does it transmit load from one base to the other. To reduce the risk of differential settlement, the bases must also be so dimensioned that the bearing pressure beneath each is similar under all possible loading conditions. If the applied moments and/or the horizontal shearing forces can reverse in direction, remember to check these situations also.

Distance between column centres	dist=5.5 m
Concrete density	den=24 kN/m³
Width	bleft=4 m
Length	lleft=2 m
Depth	hleft=0.8 m
Vertical applied load	FVleft=4500 kN
Horizontal load (left to right)	FHleft=100 kN
Applied moment (clockwise)	Mleft=50 kNm
Width	bright=4 m
Length	lright=2 m
Depth	hright=0.8 m
Vertical applied load	FVright=1000 kN
Horizontal load (left to right)	FHright=100 kN
Applied moment (clockwise)	Mright=50 kNm

No reversal of moments or shearing forces

Moment at centreline of left base BMleft=-(Mleft+FHleft*hleft)=-130 kNm
Moment at centreline of right base BMright=Mright+FHright*hright=130 kNm
BM at left end of connecting beam:
Mlend=BMleft-(BMleft-BMright)*lleft/(2*dist)
=-82.727 kNm
BM at right end of connecting beam:
Mrend=BMright+(BMleft-BMright)*lright/(2*dist)
=82.727 kNm
Shear force on connecting beam Sbeam=(-BMleft+BMright)/dist
=47.273 kN

Location: Uplift on right base: moment reversal only

Tied bases

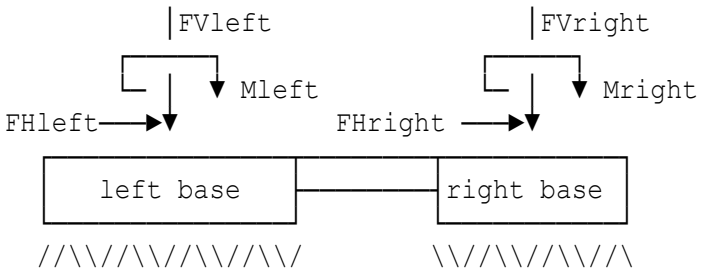

If pairs of bases supporting a trestle, gantry or similar structure are subjected to moments and horizontal shearing forces acting in the same sense on each base simultaneously, by linking the pairs of bases by tie beams the bases are relieved of the effects resulting from eccentricity and may be then designed as concentrically loaded. In such a case the size, flexibility and arrangement of the tie beam must be such that it does not provide load support itself nor does it transmit load from one base to the other. To reduce the risk of differential settlement, the bases must also be so dimensioned that the bearing pressure beneath each is similar under all possible loading conditions. If the applied moments and/or the horizontal shearing forces can reverse in direction, remember to check these situations also.

Distance between column centres	dist=5.5 m
Concrete density	den=24 kN/m³
Width	bleft=4 m
Length	lleft=2 m
Depth	hleft=0.8 m
Vertical applied load	FVleft=4500 kN
Horizontal load (left to right)	FHleft=100 kN
Applied moment (clockwise)	Mleft=50 kNm
Width	bright=4 m
Length	lright=2 m
Depth	hright=0.8 m
Vertical applied load	FVright=-100 kN
Horizontal load (left to right)	FHright=100 kN
Applied moment (clockwise)	Mright=50 kNm

No reversal of moments or shearing forces

Moment at centreline of left base BMleft=-(Mleft+FHleft*hleft)=-130 kNm
Moment at centreline of right base BMright=Mright+FHright*hright=130 kNm
BM at left end of connecting beam:
Mlend=BMleft-(BMleft-BMright)*lleft/(2*dist)
=-82.727 kNm
BM at right end of connecting beam:
Mrend=BMright+(BMleft-BMright)*lright/(2*dist)
=82.727 kNm
Shear force on connecting beam Sbeam=(-BMleft+BMright)/dist
=47.273 kN

Location: Example from 'Reinforced concrete design' by Bray

Analysis of combined footing

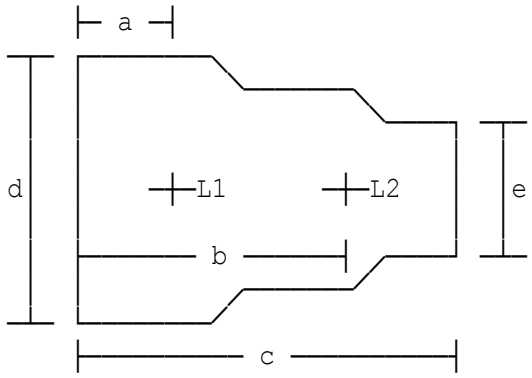

Tapered base of constant thickness supporting two Point loads L1 and L2.

The point loads are on the centre-line of base.

Distance to load 1	a=0.457 m
Distance to load 2	b=4.72 m
Length of base	c=5.13 m
Width of base at left end	d=2.688 m
Width of base at right end	e=1.295 m
Thickness of base	f=0.9 m
Load L1	L1=1690 kN
Load L2	L2=1245 kN

Ground pressures

Average pressure	AP=TL/ta=308.88 kN/m²
Eccentric pressure left end	PL=TL*(eb-EL)/zl=0.20115 kN/m²
Eccentric pressure right end	PR=TL*(EL-eb)/zr=-0.25423 kN/m²
Maximum pressure at left end	SL=AP+PL=309.08 kN/m²
Maximum pressure at right end	SR=AP+PR=308.63 kN/m²
Maximum pressure (excluding self-weight) at left end	LS=SL-f*24=287.48 kN/m²
Maximum pressure (excluding self-weight) at right end	RS=SR-f*24=287.03 kN/m²
Distance right end to zero shear	x=SX=2.65 m

Bending moments

For moment at load L1, with	l=c-a=4.673 m
and	D=b-a=4.263 m
	B1=e*RS*l^2/2=4058.4 kNm
	B2=(e*(LS-RS)+RS*(d-e))*l^3/(6*c) =1327.5 kNm
	B3=(d-e)*(LS-RS)*l^4/(12*c^2)-L2*D =-5306.5 kNm
Then bending moment at Load L1	BM=B1+B2+B3=79.449 kNm
For moment at load L2, with	l=c-b=0.41 m
and	D=0
	B1=e*RS*l^2/2=31.242 kNm
	B2=(e*(LS-RS)+RS*(d-e))*l^3/(6*c) =0.8966 kNm

	B3=(d-e)*(LS-RS)*l^4/(12*c^2)-L2*D
	=56.76E-6 kNm
Then bending moment at Load L2	BM=B1+B2+B3=32.138 kNm
For maximum moment in span, with	l=x=2.65 m
and	D=x+b-c=2.24 m
	B1=e*RS*l^2/2=1305.1 kNm
	B2=(e*(LS-RS)+RS*(d-e))*l^3/(6*c)
	=242.1 kNm
	B3=(d-e)*(LS-RS)*l^4/(12*c^2)-L2*D
	=-2788.7 kNm
Then maximum moment in span	BM=B1+B2+B3=-1241.5 kNm

Base widths

Width of base at load L1	D1=e+(c-a)*(d-e)/c=2.5639 m
Width of base at load L2	D2=e+(c-b)*(d-e)/c=1.4063 m
Width of base at max.span moment	D3=e+x*(d-e)/c=2.0146 m

Location: Large, heavily-loaded trapezoidal base

Analysis of combined footing

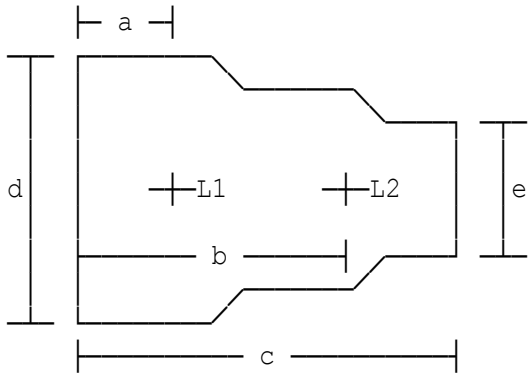

Tapered base of constant thickness supporting two Point loads L1 and L2.

The point loads are on the centre-line of base.

Distance to load 1	a=0.3 m
Distance to load 2	b=9.8 m
Length of base	c=10 m
Width of base at left end	d=5 m
Width of base at right end	e=2 m
Thickness of base	f=1.5 m
Load L1	L1=3000 kN
Load L2	L2=1500 kN

Ground pressures

Average pressure	AP=TL/ta=164.57 kN/m²
Eccentric pressure left end	PL=TL*(eb-EL)/zl=57.689 kN/m²
Eccentric pressure right end	PR=TL*(EL-eb)/zr=-76.919 kN/m²
Maximum pressure at left end	SL=AP+PL=222.26 kN/m²
Maximum pressure at right end	SR=AP+PR=87.652 kN/m²
Maximum pressure (excluding self-weight) at left end	LS=SL-f*24=186.26 kN/m²
Maximum pressure (excluding self-weight) at right end	RS=SR-f*24=51.652 kN/m²
Distance right end to zero shear	x=SX=5.65 m

Bending moments

For moment at load L1, with	l=c-a=9.7 m
and	D=b-a=9.5 m
	B1=e*RS*l^2/2=4860 kNm
	B2=(e*(LS-RS)+RS*(d-e))*l^3/(6*c) =6452.2 kNm
	B3=(d-e)*(LS-RS)*l^4/(12*c^2)-L2*D =-11271 kNm
Then bending moment at Load L1	BM=B1+B2+B3=41.357 kNm
For moment at load L2, with	l=c-b=0.2 m
and	D=0
	B1=e*RS*l^2/2=2.0661 kNm
	B2=(e*(LS-RS)+RS*(d-e))*l^3/(6*c) =0.056557 kNm

```
                                  B3=(d-e)*(LS-RS)*l^4/(12*c^2)-L2*D
                                    =0.53843E-3 kNm
Then bending moment at Load L2    BM=B1+B2+B3=2.1232 kNm

For maximum moment in span, with  l=x=5.65 m
and                               D=x+b-c=5.45 m
                                  B1=e*RS*l^2/2=1648.9 kNm
                                  B2=(e*(LS-RS)+RS*(d-e))*l^3/(6*c)
                                    =1275.1 kNm
                                  B3=(d-e)*(LS-RS)*l^4/(12*c^2)-L2*D
                                    =-7832.1 kNm
Then maximum moment in span       BM=B1+B2+B3=-4908.1 kNm
```

Base widths

```
Width of base at load L1          D1=e+(c-a)*(d-e)/c=4.91 m
Width of base at load L2          D2=e+(c-b)*(d-e)/c=2.06 m
Width of base at max.span moment  D3=e+x*(d-e)/c=3.695 m
```

Location: Small, rectangular base

Analysis of combined footing

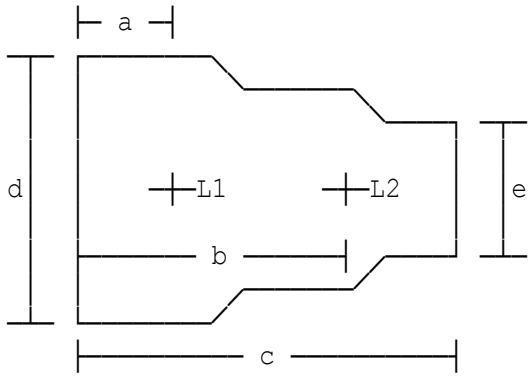

Tapered base of constant thickness supporting two Point loads L1 and L2.

The point loads are on the centre-line of base.

Distance to load 1	a=0.5 m
Distance to load 2	b=2.5 m
Length of base	c=3 m
Width of base at left end	d=1.5 m
Width of base at right end	e=1.5 m
Thickness of base	f=0.5 m
Load L1	L1=1500 kN
Load L2	L2=1000 kN

Ground pressures

Average pressure	AP=TL/ta=567.56 kN/m²
Eccentric pressure left end	PL=TL*(eb-EL)/zl=222.22 kN/m²
Eccentric pressure right end	PR=TL*(EL-eb)/zr=-222.22 kN/m²
Maximum pressure at left end	SL=AP+PL=789.78 kN/m²
Maximum pressure at right end	SR=AP+PR=345.33 kN/m²
Maximum pressure (excluding self-weight) at left end	LS=SL-f*24=777.78 kN/m²
Maximum pressure (excluding self-weight) at right end	RS=SR-f*24=333.33 kN/m²
Distance right end to zero shear	x=SX=1.5 m

Bending moments

For moment at load L1, with	l=c-a=2.5 m
and	D=b-a=2 m
	B1=e*RS*l^2/2=1562.5 kNm
	B2=(e*(LS-RS)+RS*(d-e))*l^3/(6*c) =578.7 kNm
	B3=(d-e)*(LS-RS)*l^4/(12*c^2)-L2*D =-2000 kNm
Then bending moment at Load L1	BM=B1+B2+B3=141.2 kNm
For moment at load L2, with	l=c-b=0.5 m
and	D=0
	B1=e*RS*l^2/2=62.5 kNm
	B2=(e*(LS-RS)+RS*(d-e))*l^3/(6*c) =4.6296 kNm

	B3=(d-e)*(LS-RS)*l^4/(12*c^2)-L2*D =0 kNm
Then bending moment at Load L2	BM=B1+B2+B3=67.13 kNm
For maximum moment in span, with	l=x=1.5 m
and	D=x+b-c=1 m
	B1=e*RS*l^2/2=562.5 kNm
	B2=(e*(LS-RS)+RS*(d-e))*l^3/(6*c) =125 kNm
	B3=(d-e)*(LS-RS)*l^4/(12*c^2)-L2*D =-1000 kNm
Then maximum moment in span	BM=B1+B2+B3=-312.5 kNm

Base widths

Width of base at load L1	D1=e+(c-a)*(d-e)/c=1.5 m
Width of base at load L2	D2=e+(c-b)*(d-e)/c=1.5 m
Width of base at max.span moment	D3=e+x*(d-e)/c=1.5 m

Location: Example 17.5 from Design of Reinforced Concrete Buildings

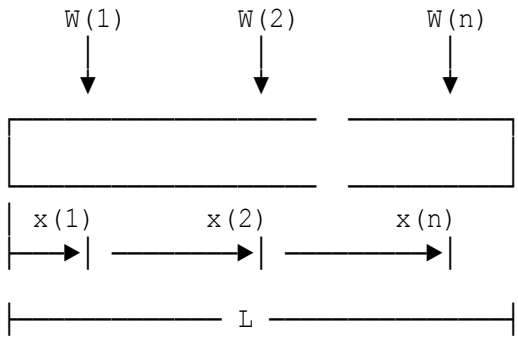

Length of base	L=20 m
Width of base	B=2 m
Number of point loads	n=5
Point load 1	W(1)=500 kN
Distance from left end of found	x(1)=2 m
Point load 2	W(2)=450 kN
Distance from left end of found	x(2)=5 m
Point load 3	W(3)=400 kN
Distance from left end of found	x(3)=8.5 m
Point load 4	W(4)=350 kN
Distance from left end of found	x(4)=12.5 m
Point load 5	W(5)=300 kN
Distance from left end of found	x(5)=18 m

SUMMARY

LOAD REF No.	MAGNITUDE OF LOAD kN	DISTANCE TO LOAD m	GROUND PRESSURE kN/m²	SHEAR TO LEFT kN	SHEAR TO RIGHT kN	BENDING MOMENT kNm
1	500	2	71.45	296.52	-203.48	300.1
2	450	5	63.406	201.09	-248.91	308.59
3	400	8.5	54.022	162.09	-237.91	175.83
4	350	12.5	43.297	151.37	-198.63	31.348
5	300	18	28.55	196.53	-103.47	99.9

Location: Beam on grid lines A1-A5

```
├──────x──────┼──────────────────────────s(n)──────────────────────┤n'th
 x varies from │──────────s(2)──────────┤     n=number of load points │load
  com to ext   ▼                        ▼                            ▼
┌──────────────────────────────────────────────────────────────────────┐
//\\//\\//\\//\\//\\//\\//\\//\\//\\//\\//\\//\\//\\//\\//\\//\\//\\//\\
├──ax(1)──┤
├──────────ax(2)──────────┤       ┌nx=No. of sections of interest
├──────────────────────────ax(nx)──────────────────────────────┤
├──────────────────────────────── L ──────────────────────────────┤
```

Overall beam length	L=11 m
No. of load points in load train	n=3
Initial distance to first load	com=1.5 m
Final distance to first load	ext=1.5 m
Spacing of increments	spc=2 m
Number of sections considered	nx=1
Beam width	B=1 m
Beam depth	D=0.5 m
Modulus of subgrade reaction	k'=10000 kN/m³

Distances from left load to each load in order, s(1) to s(3)

First load is at zero distance	s(1)=0 m
	s(2)=4 m
	s(3)=8 m

Load magnitudes – from left hand end – in order, p(1) to p(3)

	p(1)=500 kN
	p(2)=500 kN
	p(3)=500 kN

Positions of sections of interest, measured from left hand end,
at which deflections etc. required – in order, ax(1) to ax(1)

ax(1)=5.5 m

Distance to 1st load(m)	Distance to section (m)	Deflection down (m)	Rotation (degrees)	Moment (kNm)	Shear (kN)
1.5	5.5	0.012939	0	133.21	250

Maximum deflection 0.012939 m
Corresponding soil pressure 129.39 kN/m²

Copyright 1986-2024 Fitzroy Systems Ltd.

Location: Beam on elastic foundation, after Roark

Beam depth	h=0.5 m
Beam width	b=1 m
Modulus of elasticity of beam	E=9E6 kN/m²
Point load	P=2000 kN
Distance between reference points	x'=1 m
Modulus of subgrade reaction	ko=4000 kN/m³

Location: Example 1

Active thrust on wall - cohesionless soil with horizontal surface

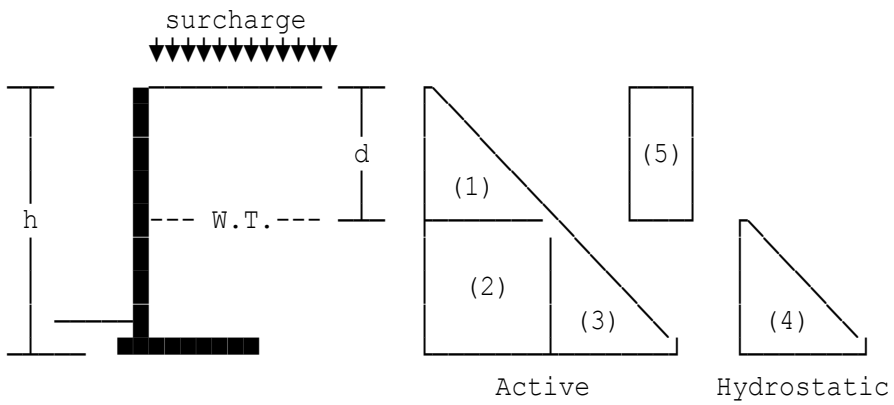

Height of wall	h=5 m
Depth to water table	d=2 m
Surcharge	q=0 kN/m²
Shearing resist.angle (degrees)	phi'=35°
Dry unit weight	gamd=17 kN/m³
Saturated unit weight	gams=20 kN/m³
Unit weight of water	gamw=9.8 kN/m³

Location: Example 2

Active thrust on wall - cohesionless soil with horizontal surface

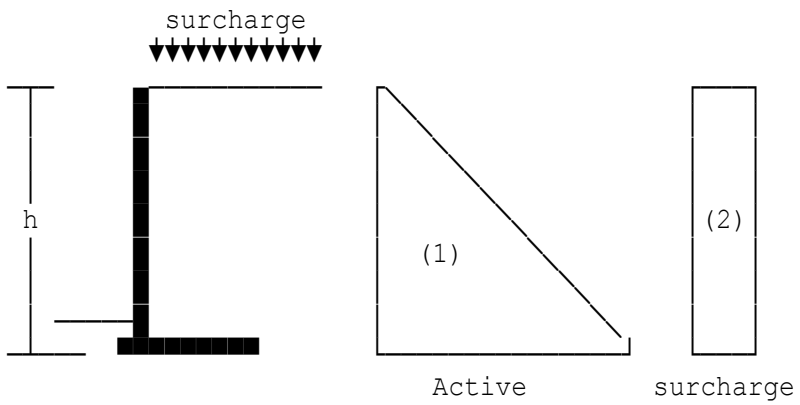

Height of wall	h=5 m
Surcharge	q=0 kN/m²
Unit weight	gam=18 kN/m³
Shearing resist.angle (degrees)	phi'=35°

Location: Example 1

Active and passive pressures on sheet pile wall - with two soils

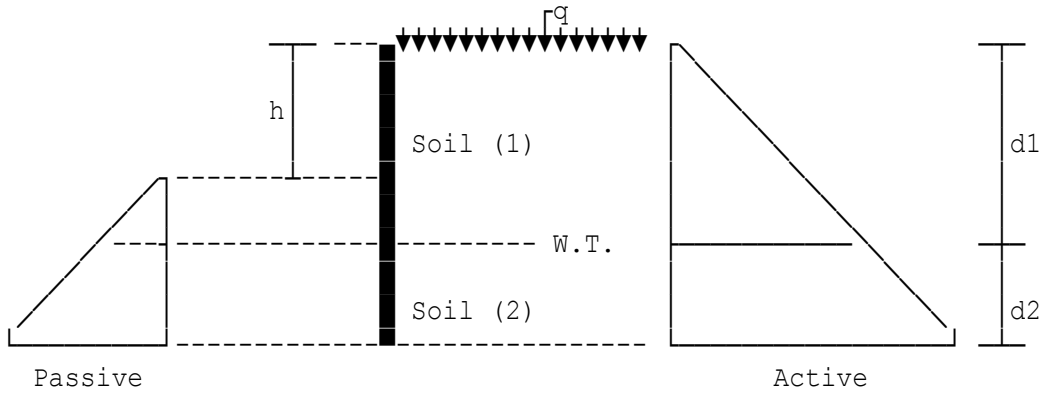

Unsupported height of wall	h=4.5 m
Surcharge pressure	q=50 kN/m²

Design data for soil 1

Depth of soil	d1=6 m
Cohesive strength	c1'=0 kN/m²
Dry unit weight	gam1=18 kN/m³
Shearing resist.angle (degrees)	phi1'=38°

Design data for soil 2

Depth of soil	d2=3 m
Cohesive strength of soil	c2'=10 kN/m²
Saturated unit weight soil	gam2=20 kN/m³
Shearing resist.angle (degrees)	phi2'=28°
Unit weight of water	gamw=9.8 kN/m³

Active and passive pressures

Active pressure top of soil 1	pat1=Ka1*q-2*c1'*SQR(Ka1)=11.894 kN/m²
Active pressure bot of soil 1	pab1=pat1+Ka1*gam1*d1=37.586 kN/m²
Active pressure top of soil 2	pat2=Ka2*(q+gam1*d1)-2*c2'*SQR(Ka2) =45.026 kN/m²
Active pressure bot of soil 2	pab2=pat2+Ka2*(gam2-gamw)*d2 =56.074 kN/m²
Passive pressure top of soil 1	ppt1=0 kN/m²
Passive pressure bot of soil 1	ppb1=Kp1*gam1*(d1-h)=113.5 kN/m²
Passive pressure top of soil 2	ppt2=Kp2*gam1*(d1-h)+2*c2'*SQR(Kp2) =108.07 kN/m²
Passive pressure bot of soil 2	ppb2=ppt2+Kp2*(gam2-gamw)*d2 =192.83 kN/m²

Location: Grid B

Active/passive wall pressures (Rankine) retaining soil slope

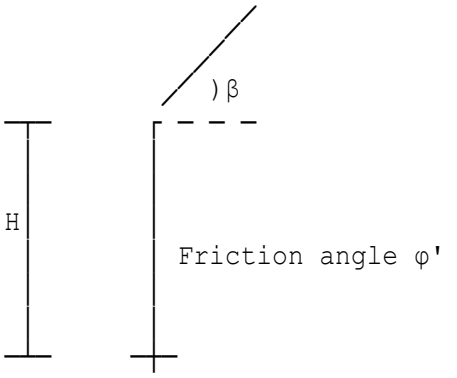

Design assumptions:
- water table below wall
- Cohesion c'=0

Height of wall	H=6 m
Unit weight of soil	gamma=18 kN/m³
Soil slope in degrees	beta=20°
Soil friction angle in degrees	phi=40°
Total active thrust on wall	Pa=0.5*Ka*gamma*H^2*COS(beta')
	=81.135 kN/m

Location: Example from Capper & Cassie

Slope Stability

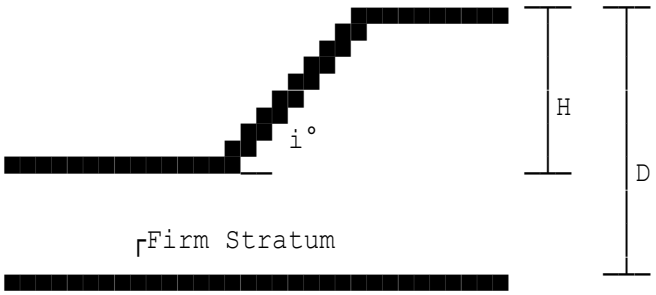

Factor of safety of soil slope using Taylor's stability numbers method.

Height of bank	H=12 m
Slope of soil (degrees)	i=45°
Unit weight of soil	gamma=20.4 kN/m³
Soil cohesion	c=28.5 kN/m²
Soil angle of friction	phi=20°
Factor of Safety (cohesion)	Fc=c/(N*gamma*H)=1.8191

The true factor of safety will be somewhat less than this as cohesion alone was considered.

Selected reduced F.O.S. Fs=1.5

The actual F.O.S must lie between these values (1.5 and 1.313)

Further iteration gives:

Factor of Safety will be around 1.37

Location: Capper & Cassie Example in Fig 90

Slope stability - the Swedish method

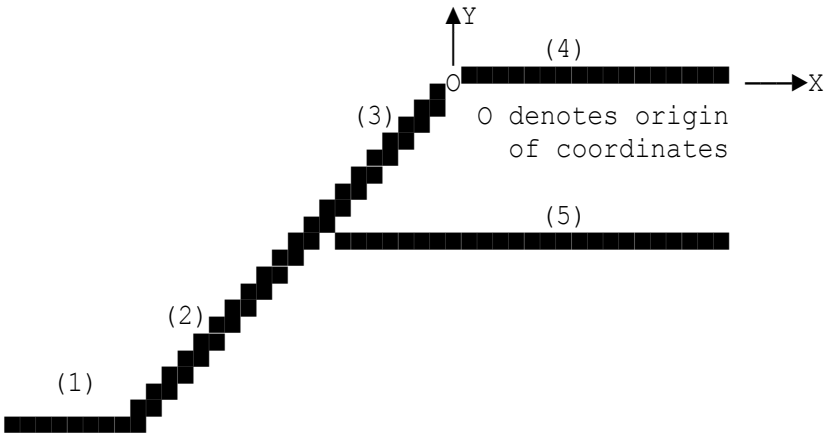

Coordinates of boundary line 1 of 5

X value LHE of boundary line	xa(1)=-5000 m
Y value LHE of boundary line	ya(1)=-11 m
X value RHE of boundary line	xb(1)=-26.7 m
Y value RHE of boundary line	yb(1)=-11 m

Material properties

Density of material below line	w(1)=18.536 kN/m³
Angle of friction of soil above	fa(1)=0°
Cohesion of soil above the line	ca(1)=0 kN/m²
Angle of friction of soil below	fb(1)=12°
Cohesion of soil below the line	cb(1)=21.546 kN/m²

Coordinates of boundary line 2 of 5

X value LHE of boundary line	xa(2)=-26.7 m
Y value LHE of boundary line	ya(2)=-11 m
X value RHE of boundary line	xb(2)=-14.356 m
Y value RHE of boundary line	yb(2)=-5.967 m

Material properties

Density of material below line	w(2)=18.536 kN/m³
Angle of friction of soil above	fa(2)=0°
Cohesion of soil above the line	ca(2)=0 kN/m²
Angle of friction of soil below	fb(2)=12°
Cohesion of soil below the line	cb(2)=21.546 kN/m²

Coordinates of boundary line 3 of 5

X value LHE of boundary line	xa(3)=-14.356 m
Y value LHE of boundary line	ya(3)=-5.967 m
X value RHE of boundary line	xb(3)=0 m
Y value RHE of boundary line	yb(3)=0 m

Material properties

Density of material below line	w(3)=17.28 kN/m³
Angle of friction of soil above	fa(3)=0°
Cohesion of soil above the line	ca(3)=0 kN/m²
Angle of friction of soil below	fb(3)=25°
Cohesion of soil below the line	cb(3)=0 kN/m²

Coordinates of boundary line 4 of 5

X value LHE of boundary line	xa(4)=0 m
Y value LHE of boundary line	ya(4)=0 m
X value RHE of boundary line	xb(4)=5000 m
Y value RHE of boundary line	yb(4)=0 m

Material properties

Density of material below line	w(4)=17.28 kN/m³
Angle of friction of soil above	fa(4)=0°
Cohesion of soil above the line	ca(4)=0 kN/m²
Angle of friction of soil below	fb(4)=25°
Cohesion of soil below the line	cb(4)=0 kN/m²

Coordinates of boundary line 5 of 5

X value LHE of boundary line	xa(5)=-14.356 m
Y value LHE of boundary line	ya(5)=-5.967 m
X value RHE of boundary line	xb(5)=5000 m
Y value RHE of boundary line	yb(5)=-5.967 m

Material properties

Density of material below line	w(5)=18.536 kN/m³
Angle of friction of soil above	fa(5)=25°
Cohesion of soil above the line	ca(5)=0 kN/m²
Angle of friction of soil below	fb(5)=12°
Cohesion of soil below the line	cb(5)=21.546 kN/m²

Coordinates of trial area

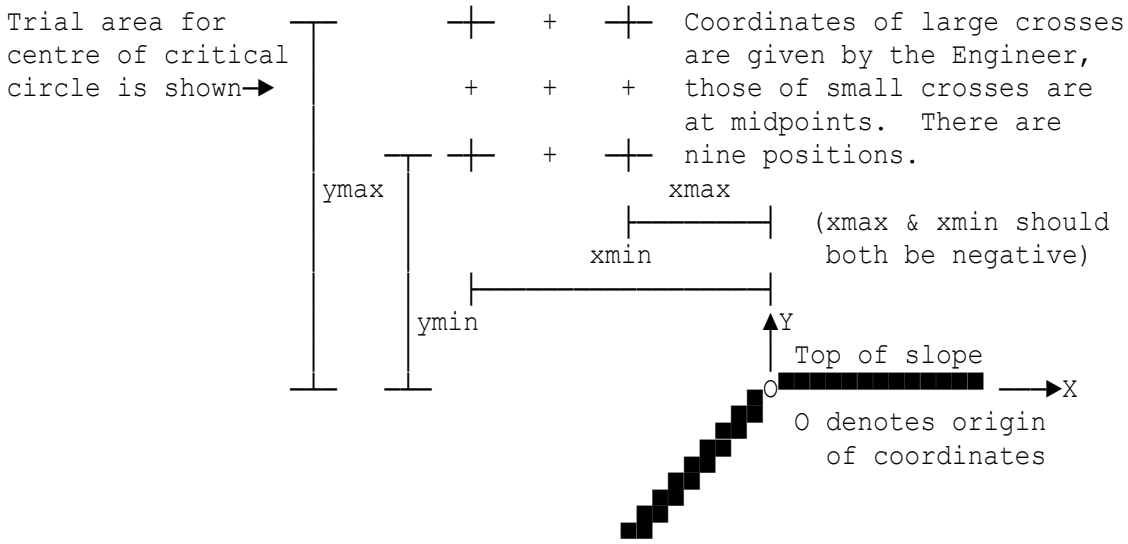

Minimum X coord of trial circle	xmin=-17.6 m
Maximum X coord of trial circle	xmax=-17.6 m
Minimum Y coord of trial circle	ymin=14.171 m
Maximum Y coord of trial circle	ymax=14.171 m
Minimum radius of trial circle	rmin=26.737 m
Maximum radius of trial circle	rmax=26.737 m

Location: London Borough of Croydon Example

Slope stability - the Swedish method

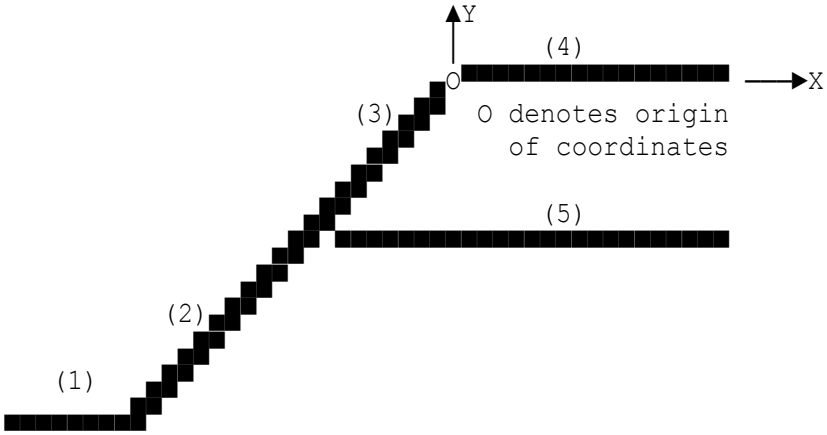

Coordinates of boundary line 1 of 5

X value LHE of boundary line	xa(1)=-500 m
Y value LHE of boundary line	ya(1)=-9 m
X value RHE of boundary line	xb(1)=-14 m
Y value RHE of boundary line	yb(1)=-9 m

Material properties

Density of material below line	w(1)=17 kN/m³
Angle of friction of soil above	fa(1)=0°
Cohesion of soil above the line	ca(1)=0 kN/m²
Angle of friction of soil below	fb(1)=20°
Cohesion of soil below the line	cb(1)=20 kN/m²

Coordinates of boundary line 2 of 5

X value LHE of boundary line	xa(2)=-14 m
Y value LHE of boundary line	ya(2)=-9 m
X value RHE of boundary line	xb(2)=-2 m
Y value RHE of boundary line	yb(2)=-3 m

Material properties

Density of material below line	w(2)=17 kN/m³
Angle of friction of soil above	fa(2)=0°
Cohesion of soil above the line	ca(2)=0 kN/m²
Angle of friction of soil below	fb(2)=20°
Cohesion of soil below the line	cb(2)=20 kN/m²

Coordinates of boundary line 3 of 5

X value LHE of boundary line	xa(3)=0 m
Y value LHE of boundary line	ya(3)=-3 m
X value RHE of boundary line	xb(3)=0.01 m
Y value RHE of boundary line	yb(3)=0 m

Material properties

Density of material below line	w(3)=22 kN/m³
Angle of friction of soil above	fa(3)=0°
Cohesion of soil above the line	ca(3)=0 kN/m²
Angle of friction of soil below	fb(3)=35°
Cohesion of soil below the line	cb(3)=0 kN/m²

Coordinates of boundary line 4 of 5

X value LHE of boundary line	xa(4)=0.01 m
Y value LHE of boundary line	ya(4)=0 m
X value RHE of boundary line	xb(4)=100 m
Y value RHE of boundary line	yb(4)=0 m

Material properties

Density of material below line	w(4)=22 kN/m³
Angle of friction of soil above	fa(4)=0°
Cohesion of soil above the line	ca(4)=0 kN/m²
Angle of friction of soil below	fb(4)=35°
Cohesion of soil below the line	cb(4)=0 kN/m²

Coordinates of boundary line 5 of 5

X value LHE of boundary line	xa(5)=-2 m
Y value LHE of boundary line	ya(5)=-3 m
X value RHE of boundary line	xb(5)=0 m
Y value RHE of boundary line	yb(5)=-3 m

Material properties

Density of material below line	w(5)=17 kN/m³
Angle of friction of soil above	fa(5)=35°
Cohesion of soil above the line	ca(5)=0 kN/m²
Angle of friction of soil below	fb(5)=20°
Cohesion of soil below the line	cb(5)=20 kN/m²

Coordinates of trial area

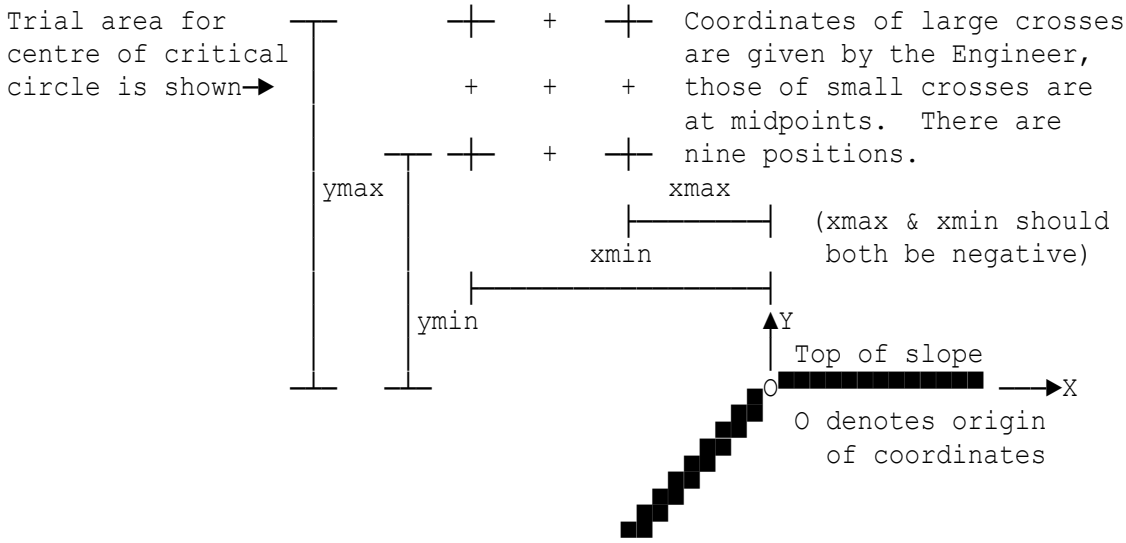

Minimum X coord of trial circle	xmin=-20 m
Maximum X coord of trial circle	xmax=-15 m
Minimum Y coord of trial circle	ymin=15 m
Maximum Y coord of trial circle	ymax=20 m
Minimum radius of trial circle	rmin=30.5 m
Maximum radius of trial circle	rmax=32.5 m

Location: Example 7.1

Coefficient of volume compressibility and compression index

Specific gravity - soil particles Gs=2.73
Initial thickness of specimen ti=19 mm
Water content at end of test w1=19.8 %

Final thickness tf=ti-(d(1)-d(i))=15.48 mm
Void ratio at end of test e1=w1*Gs/100=0.54054
Change in thickness deltaH=ti-tf=3.52 mm
Change in void ratio delt'e=(1+e1)*deltaH/(ti-deltaH)
=0.3503
Void ratio at start of test e0=e1+delt'e=0.89084

$$\frac{\text{delt'e}}{\text{deltaH}} = \frac{1.8908}{19}$$ i.e. delt'e =0.099518 * detlaH and can be used

to obtain the void ratio at the end of each increment as below:

Pressure kN/m²	Change in thickness (mm)	Change in void ratio	Void ratio
0	0	0	0.89084
1.7324	0.253	0.025178	0.86567
2.0294	0.507	0.050456	0.84039
2.3304	0.892	0.08877	0.80207
2.6325	1.551	0.15435	0.73649
2.9335	2.392	0.23805	0.6528
3.2345	3.324	0.3308	0.56005
3.5355	4.263	0.42425	0.4666
0	3.52	0.3503	0.54054

Preconsolidation pressure

RF Craig in 'Soil Mechanics' states "Whenever possible the preconsolidation pressure for an overconsolidated clay should not be exceeded in construction. Compression will not usually be great if the effective vertical stress remains below σ'c: only if σ'c is exceeded will compression be large."

Casagrande has suggested an empirical method to estimate the preconsolidation pressure from the curve of void ratio plotted against the effective pressure plotted to a LOG10 scale. A numerical procedure will be used to avoid having to plot void ratio against the LOG of pressure. Firstly 'curve fit' to fill out 5 intermediate values between each of the above values for void ratio and pressure.

Preconsolidation pressure sig'pc=EXP(x/0.4342945)=318.39

Coefficient of volume compressibility and compression index

Void ratio for higher stress e1=0.57814
Coeff. of volume compressibility mv=(e0-e1)/(1+e0)/(sigm'1-sigm'0)
=66.574E-6 m²/kN
Compression index is as follows:
Cc=(e0-e1)/(0.43429*LOG(sigm'1
/sigm'0))=0.30859

Location: Example 7.2

Length of foundation	X=45 m
Breadth of foundation	Y=30 m
Thickness of clay layer	H=4 m
Depth to centre of clay layer	z=23.5 m
Coeff of volume compress. - clay	mv=0.35 m²/MN
Pressure beneath foundation	q=125 kN/m²

Location: Safe bearing pressures by bearing capacity factors

Determination of soil safe bearing capacity

```
_________                 _________  ___
\/\\//\\/|               //\\//\\/   |
  GWT    |               |          |
  __v__  |               |          |Df
         |               |          |
         |_______________|          |___

         |------ B ------|
```

Determination of soil Safe Bearing Capacity assuming the removal of overburden pressure when calculating the net ultimate bearing capacity.

Soil type is assumed to be constant.

Foundation formation depth	Df=1.8 m
Foundation breadth	B=1.4 m
Foundation length	L=15 m
Drained shear strength parameter	c'=0 kN/m²
Soil angle of friction	phi=28°
Saturated unit weight of soil	gsat=18.8 kN/m³
Dry unit weight of soil	gdry=14.6 kN/m³
Depth to ground water table	GWT=1.8 m
Gross ultimate bearing capacity	qult=nc+nq+ng=443.2 kN/m²
Factor of safety against failure	Fs=3
Gross safe bearing capacity	qmax=qult/Fs+q=174 kN/m²

Foundation type under consideration is a strip foundation.

Location: Ex1 - Leisure centre car park

The structural design of bituminous roads

The TRRL Report 1132 published by the Department of Transport will be adopted for pavement design. This document recommends that any material within 450 mm of the road surface including the Subbase itself, must be frost resistant. The weight of vehicles on circulatory roads or service roads in a commercial car park is assumed to be greater than 1500 kg and less than this weight on car parking areas.

(A) Parking areas for cars only

The TRRL Report is not relevant for parking areas as vehicle weights are less than 1500 kg. Dense bitumen macadam to be in accordance with BS EN 13108 and/or PD 6691:2010 Guidance on the use of BS EN 13108 Bituminous mixtures - Materials Specifications.

For CBR values over 3% the following minimum layer thicknesses are recommended:

Wearing course (Surface course)	:	25 mm thick (6 mm size) Dense Bitumen Macadam (DBM)
Basecourse (Binder course)	:	60 mm Dense Bitumen Macadam (DBM)
Roadbase (Base)	:	225 mm thick layer of DOT type 1 granular fill

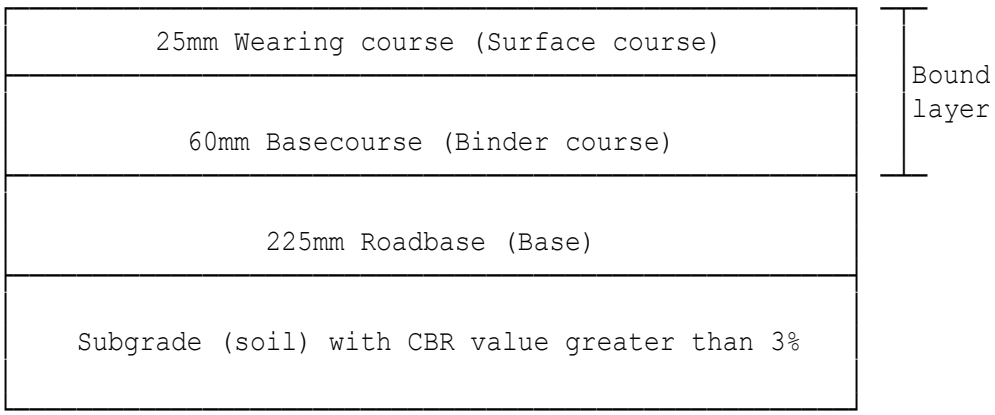

(B) Circulatory roads

Vehicles of weight greater than 1500 kg are assumed.
Design life of flexible pavement life=20 years
CBR value from site tests cbr=2 %

The total thickness of the bound layer entails the Wearing course, Basecourse and Roadbase.
Design life n=life=20 years
Initial daily flow of vehicles Fo=10
Growth rate r=r'/100=0.02

Below P' represents the commercial vehicles using the slow lane.
Percentage of commercial vehicles P'=100 %
Proportion of commercial vehicles P=P'/100=1
The expression below is by Addis and Robinson (1983) and will be used to calculate the total number of commercial vehicles (Tn) using the slow lane over the design life of 20 years.

Total number of vehicles	Tn=365*Fo*((1+r)^n-1)*P/(r*1000000)
	=0.088685 million
Year car park will be completed	Year=2017
Mid-term year with a base year of 1945	t=Year+n/2-1945=82
Mid term daily flow	F=Fo*(1+r)^(n/2)=12.19
Expression	C1=0.082+0.93^(t/2)*0.93^(t/2)
	=0.084604
Expression	C2=0.082+0.92^(t/2)*0.92^(t/2)
	=0.083073
Expression	C3=3.9^(F/1550)=1.0108
Vehicle damage factor	D=0.35/C1-(0.26/C2)*(1.0/C3)=1.0405
Number of standard axles	Nsa=Tn*D=0.092275 msa

The following minimum thickness is from Fig D2 of TRRL Report 1132.

Minimum thickness of bound layer	tbl=TABLE 1 for Nsa=0.092275, cbr=2
	=150.68 mm
	=155 mm (rounded up)
Recommended bound layer thickness	tbl=175 mm

Bound layer thickness

Hot rolled asphalt and dense bitumen macadam to be in accordance with BS EN 13108 and/or PD 6691:2010 Guidance on the use of BS EN 13108 Bituminous mixtures - Materials Specifications.

Wearing course (Surface course):	35 mm Hot Rolled Asphalt (HRA)
Basecourse (Binder course) :	55 mm Dense Bitumen Macadam (DBM)
Roadbase (Base) :	85 mm Dense Bitumen Macadam (DBM)

Subbase thickness

The thickness of the Subbase can be obtained from Figure C3 or Figure C5 of the TRRL Report 1132. The former utilises DOT type 1 granular material only and the latter a combination of DOT type 1 granular fill and a Capping layer.

Option 1 - DOT type 1 only

When a Capping layer is not employed for weak Subgrades of less than 5% CBR, the thickness of Subbase will exceed 225 mm and must be laid in two layers. The lower layer should be as thick as practically possible and preferably 225 mm, in order to avoid the danger of damaging the Subbase or Subgrade during compaction. The upper layer should have a minimum thickness of 50 mm. Fig C3 of the TRRL Report 1132 will be utilised to evaluate the Subbase thickness.

Length of road under construction	Lroad=150 m
Subbase thickness (DOT type 1)	Sub=300 mm

Option 2 - (DOT type 1 + Capping layer)

From Figure C5 for CBR values of 2%, 3%, 4% and 5% use 150 mm Subbase of DOT type 1 over 350 mm of Capping layer.
In order to reduce the possibility of failure within the Capping layer the latter should have a minimum CBR value of 15%. A suitable material for a Capping layer is 6F2 as defined in the specification for Highway Works: Volume 1: Tables 6/1 and 6/2.

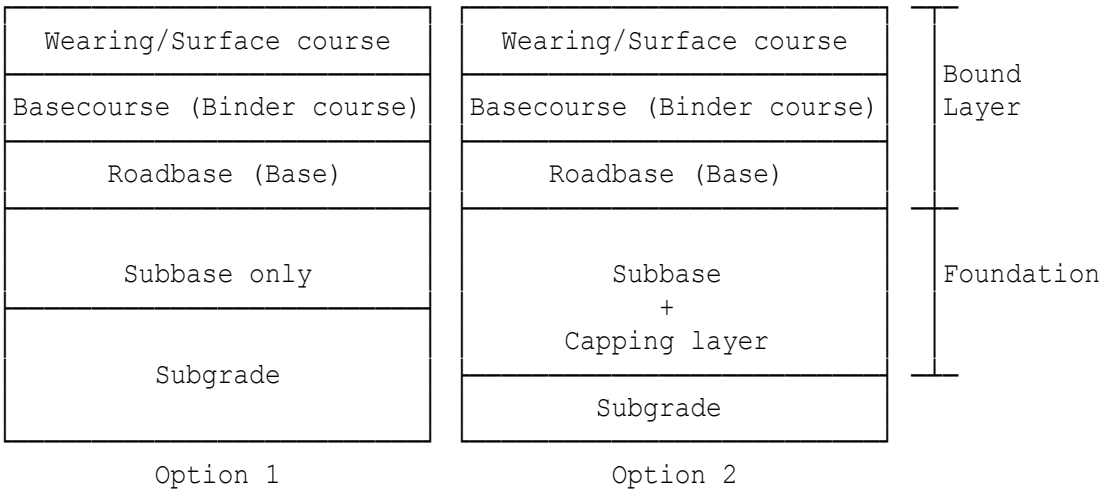

Location: Ex2 - Service station car park

The structural design of bituminous roads

The TRRL Report 1132 published by the Department of Transport will be adopted for pavement design. This document recommends that any material within 450 mm of the road surface including the Subbase itself, must be frost resistant. The weight of vehicles on circulatory roads or service roads in a commercial car park is assumed to be greater than 1500 kg and less than this weight on car parking areas.

(A) Parking areas for cars only

The TRRL Report is not relevant for parking areas as vehicle weights are less than 1500 kg. Dense bitumen macadam to be in accordance with BS EN 13108 and/or PD 6691:2010 Guidance on the use of BS EN 13108 Bituminous mixtures - Materials Specifications.

For CBR values over 3% the following minimum layer thicknesses are recommended:

Wearing course (Surface course)	:	25 mm thick (6 mm size) Dense Bitumen Macadam (DBM)
Basecourse (Binder course)	:	60 mm Dense Bitumen Macadam (DBM)
Roadbase (Base)	:	225 mm thick layer of DOT type 1 granular fill

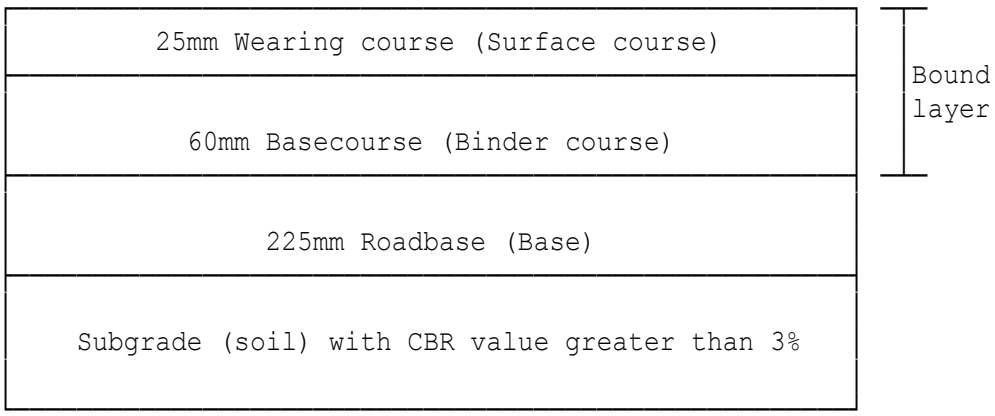

(B) Circulatory roads

Vehicles of weight greater than 1500 kg are assumed.
Design life of flexible pavement life=20 years
CBR value from site tests cbr=5 %

The total thickness of the bound layer entails the Wearing course, Basecourse and Roadbase.
Design life n=life=20 years
Initial daily flow of vehicles Fo=300
Growth rate r=r'/100=0.02

Below P' represents the commercial vehicles using the slow lane.
Percentage of commercial vehicles P'=100 %
Proportion of commercial vehicles P=P'/100=1
The expression below is by Addis and Robinson (1983) and will be used to calculate the total number of commercial vehicles (Tn) using the slow lane over the design life of 20 years.

Total number of vehicles	Tn=365*Fo*((1+r)^n-1)*P/(r*1000000) =2.6606 million
Year car park will be completed	Year=2017
Mid-term year with a base year of 1945	t=Year+n/2-1945=82
Mid term daily flow	F=Fo*(1+r)^(n/2)=365.7
Expression	C1=0.082+0.93^(t/2)*0.93^(t/2) =0.084604
Expression	C2=0.082+0.92^(t/2)*0.92^(t/2) =0.083073
Expression	C3=3.9^(F/1550)=1.3786
Vehicle damage factor	D=0.35/C1-(0.26/C2)*(1.0/C3)=1.8667
Number of standard axles	Nsa=Tn*D=4.9666 msa

The following minimum thickness is from Fig D2 of TRRL Report 1132.

Minimum thickness of bound layer	tbl=TABLE 1 for Nsa=4.9666, cbr=5 =249.67 mm =250 mm (rounded up)
Bound layer thickness	tbl=tbl=250 mm

Bound layer thickness

Hot rolled asphalt and dense bitumen macadam to be in accordance with BS EN 13108 and/or PD 6691:2010 Guidance on the use of BS EN 13108 Bituminous mixtures - Materials Specifications.

Wearing course (Surface course):	35 mm Hot Rolled Asphalt (HRA)
Basecourse (Binder course) :	55 mm Dense Bitumen Macadam (DBM)
Roadbase (Base) :	160 mm Dense Bitumen Macadam (DBM)

Subbase thickness

The thickness of the Subbase can be obtained from Figure C3 or Figure C5 of the TRRL Report 1132. The former utilises DOT type 1 granular material only and the latter a combination of DOT type 1 granular fill and a Capping layer.

Option 1 - DOT type 1 only

When a Capping layer is not employed for weak Subgrades of less than 5% CBR, the thickness of Subbase will exceed 225 mm and must be laid in two layers. The lower layer should be as thick as practically possible and preferably 225 mm, in order to avoid the danger of damaging the Subbase or Subgrade during compaction. The upper layer should have a minimum thickness of 50 mm. Fig C3 of the TRRL Report 1132 will be utilised to evaluate the Subbase thickness.

Length of road under construction	Lroad=150 m
Subbase thickness (DOT type 1)	Sub=225 mm

Option 2 - (DOT type 1 + Capping layer)

From Figure C5 for CBR values of 2%, 3%, 4% and 5% use 150 mm Subbase of DOT type 1 over 350 mm of Capping layer.
In order to reduce the possibility of failure within the Capping layer the latter should have a minimum CBR value of 15%. A suitable material for a Capping layer is 6F2 as defined in the specification for Highway Works: Volume 1: Tables 6/1 and 6/2.

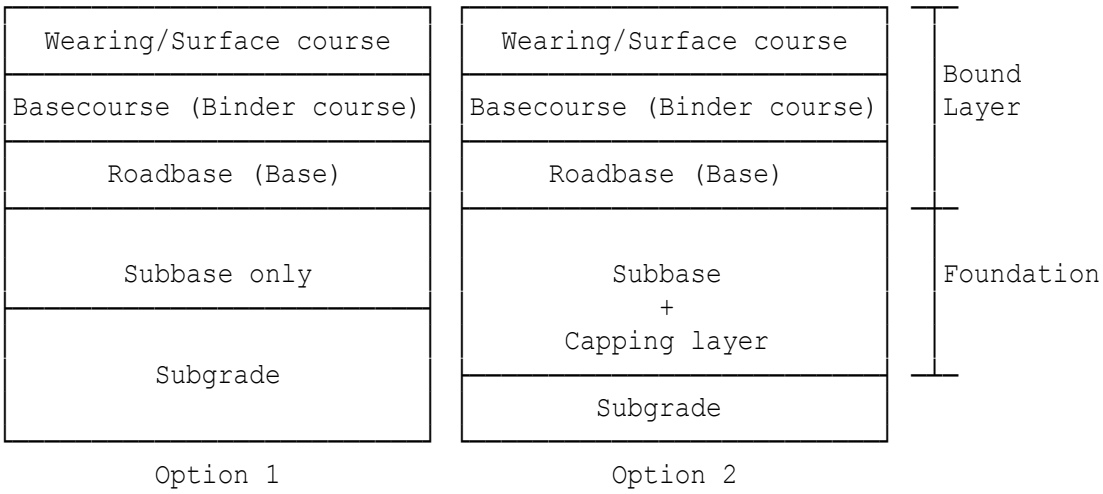

Location: Ex1 - Leisure centre car park (Foundation Class 1)

The structural design of bituminous roads

The Highways Agency Design Manual for Roads and Bridges HD26/06 will be adopted for the upper pavement design. This standard provides details of permitted materials and thickness for the construction of pavements for new trunk roads. The total thickness of the combined bituminous layer will be determined from Fig 2.1 - Design Thickness for Flexible Pavements. The upper pavement thickness entails the surface course, binder course and base. The pavement foundation entails the Subbase and Capping over the Subgrade (Soil). The overall thickness of the pavement foundation will be determined in accordance with HD25 assuming either Restricted Foundation Design (Classes 1,2 & 3) or Performance Foundation Design (Classes 1,2,3 & 4). Interim Advice Note IAN 73/06 Rev 1 (2009), will be utilised by this proforma as currently HD25 is in DRAFT form. Standard HD26/06 (Chapter 3 under Materials section) states that all materials within 450mm of the road surface, where the mean annual frost index (MAFI) of the site is ≥ 50 must be frost susceptible in the long-term. Where the MAFI is <50 the thickness of non-frost susceptible material may be 350mm.

Design Criteria

The designs are based on the design manual for roads and bridges, which in turn is based on the work of the Transport Research Laboratory. This design manual is only applicable to roads to be built in the UK and only for trunk roads, motorways and other multi-laned roads.

When comparing the relative benefits of the types of road, it is necessary to compare both over a similar time period. This is normally the design life, which is typically 20 years for flexible pavements. As such, it is necessary to take into consideration all maintenance costs

Upper pavement overall design thickness

Design life (flexible pavement)	life=20 years
Design traffic in msa units	dtr=20 msa
Upper pavement design thickness	dt=TABLE 3 for dtr=20
	=320 mm
	=325 mm (rounded up)

Upper pavement design options

(A) The following three options use HDM50 for binder & base courses

Option 1:

Surfacing (wearing course)	45 mm Hot Rolled Asphalt (HRA)
Binder course	55 mm High Density Macadam (HDM50)
Base	225 mm High Density Macadam (HDM50)

Option 2:

Surfacing (wearing course)	45 mm Hot Rolled Asphalt (HRA)
Base	280 mm High Density Macadam (HDM50)

Option 3:

Surfacing (wearing course)	50 mm Porous Asphalt (PA)
Binder course	60 mm High Density Macadam (HDM50)
Base	245 mm High Density Macadam (HDM50)

Choosing a PA surfacing with a standard 50mm thickness, the contribution to design thickness from PA will be taken to be 20mm only.

(B) The following three options use DBM50 for binder & base courses

Option 4:

Surfacing (wearing course)	45 mm Hot Rolled Asphalt (HRA)
Binder course	55 mm Dense Bitumen Macadam (DBM50)
Base	225 mm Dense Bitumen Macadam (DBM50)

Option 5:

Surfacing (wearing course)	45 mm Hot Rolled Asphalt (HRA)
Base	280 mm Dense Bitumen Macadam (DBM50)

Option 6:

Surfacing (wearing course)	50 mm Porous Asphalt (PA)
Binder course	60 mm Dense Bitumen Macadam (DBM50)
Base	245 mm Dense Bitumen Macadam (DBM50)

Choosing a PA surfacing with a standard 50mm thickness, the contribution to design thickness from PA will be taken to be 20mm only.

Foundation design

Restricted Foundation Design with Capping only will be adopted i.e. no Subbase layer will be provided. The design traffic is ≤ 20 million standard axles (msa). Capping Specification (MCHW1) Series 600 (see Foundation materials section).

Subgrade CBR (%)	CBR=5 %
Subgrade Stiffness Modulus	E=17.6*(CBR)^0.64=49.301 MPa
Capping layer thickness	clt=TABLE 3.11 for E=49.301
	=395.59 mm
	=400 mm (rounded up)

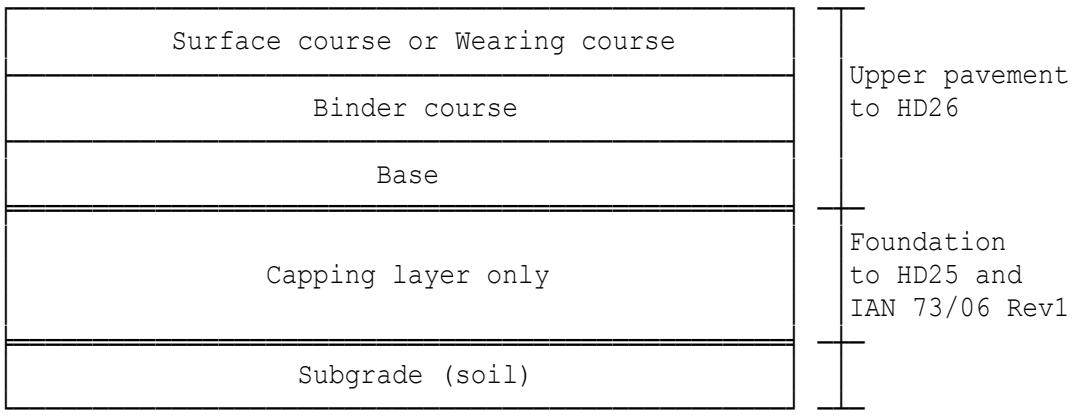

NOTE: Base could be in two layers (i.e. upper base & lower base)

Location: Ex2 - Leisure centre car park (Foundation Class 2)

The structural design of bituminous roads

The Highways Agency Design Manual for Roads and Bridges HD26/06 will be adopted for the upper pavement design. This standard provides details of permitted materials and thickness for the construction of pavements for new trunk roads. The total thickness of the combined bituminous layer will be determined from Fig 2.1 - Design Thickness for Flexible Pavements. The upper pavement thickness entails the surface course, binder course and base. The pavement foundation entails the Subbase and Capping over the Subgrade (Soil). The overall thickness of the pavement foundation will be determined in accordance with HD25 assuming either Restricted Foundation Design (Classes 1,2 & 3) or Performance Foundation Design (Classes 1,2,3 & 4). Interim Advice Note IAN 73/06 Rev 1 (2009), will be utilised by this proforma as currently HD25 is in DRAFT form. Standard HD26/06 (Chapter 3 under Materials section) states that all materials within 450mm of the road surface, where the mean annual frost index (MAFI) of the site is ≥ 50 must be frost susceptible in the long-term. Where the MAFI is <50 the thickness of non-frost susceptible material may be 350mm.

Design Criteria

The designs are based on the design manual for roads and bridges, which in turn is based on the work of the Transport Research Laboratory. This design manual is only applicable to roads to be built in the UK and only for trunk roads, motorways and other multi-laned roads.

When comparing the relative benefits of the types of road, it is necessary to compare both over a similar time period. This is normally the design life, which is typically 20 years for flexible pavements. As such, it is necessary to take into consideration all maintenance costs

Upper pavement overall design thickness

Design life (flexible pavement)	life=20 years
Design traffic in msa units	dtr=75 msa
Upper pavement design thickness	dt=TABLE 4 for dtr=75
	=357.5 mm
	=360 mm (rounded up)

Upper pavement design options

(A) The following three options use HDM50 for binder & base courses

Option 1:

Surfacing (wearing course)	45 mm Hot Rolled Asphalt (HRA)
Binder course	55 mm High Density Macadam (HDM50)
Base	260 mm High Density Macadam (HDM50)

Option 2:

Surfacing (wearing course)	45 mm Hot Rolled Asphalt (HRA)
Base	315 mm High Density Macadam (HDM50)

Option 3:

Surfacing (wearing course)	50 mm Porous Asphalt (PA)
Binder course	60 mm High Density Macadam (HDM50)
Base	280 mm High Density Macadam (HDM50)

Choosing a PA surfacing with a standard 50mm thickness, the contribution to design thickness from PA will be taken to be 20mm only.

(B) The following three options use DBM50 for binder & base courses

Option 4:

Surfacing (wearing course)	45 mm Hot Rolled Asphalt (HRA)
Binder course	55 mm Dense Bitumen Macadam (DBM50)
Base	260 mm Dense Bitumen Macadam (DBM50)

Option 5:

Surfacing (wearing course)	45 mm Hot Rolled Asphalt (HRA)
Base	315 mm Dense Bitumen Macadam (DBM50)

Option 6:

Surfacing (wearing course)	50 mm Porous Asphalt (PA)
Binder course	60 mm Dense Bitumen Macadam (DBM50)
Base	280 mm Dense Bitumen Macadam (DBM50)

Choosing a PA surfacing with a standard 50mm thickness, the contribution to design thickness from PA will be taken to be 20mm only.

Foundation design

Restricted Foundation Design with Subbase & Capping layers provided as the design traffic is ≤ 80 million standard axles (msa). Subbase to be MCHW1 803, 804, 805, 806 and Capping to be MCHW1 Series 600 (refer to Foundation materials section).

WARNING:
Clause 804 (Subbase Type 2) may only be used for pavement design traffic levels up to 5 msa.

Subgrade CBR (%)	CBR=5 %
Subgrade Stiffness Modulus	E=17.6*(CBR)^0.64=49.301 MPa
Subbase layer thickness	slt=TABLE 3.21 for E=49.301
	=243.5 mm
	=245 mm (rounded up)
Capping layer thickness	clt=TABLE 3.23 for E=49.301
	=211.4 mm
	=215 mm (rounded up)

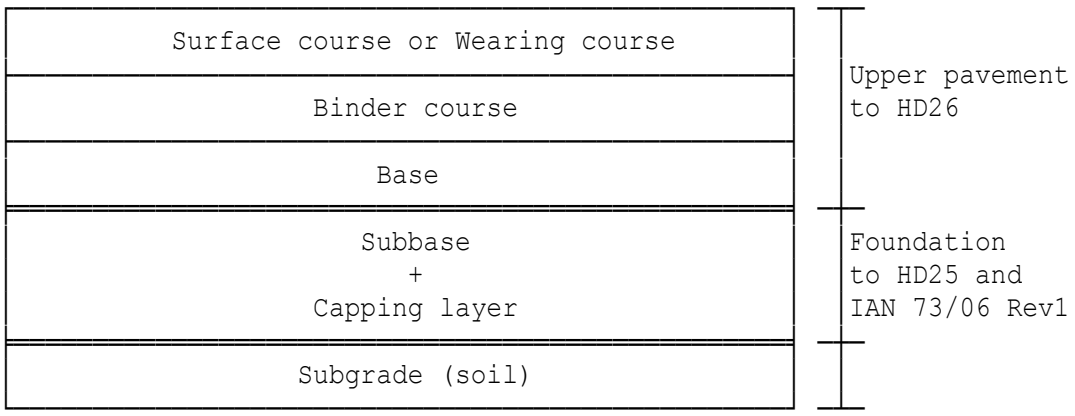

NOTE: Base could be in two layers (i.e. upper base & lower base).
Subbase could be in two layers (i.e. upper Subbase & lower Subbase)

Location: Ex3 - Leisure centre car park (Foundation Class 2)

The structural design of bituminous roads

The Highways Agency Design Manual for Roads and Bridges HD26/06 will be adopted for the upper pavement design. This standard provides details of permitted materials and thickness for the construction of pavements for new trunk roads. The total thickness of the combined bituminous layer will be determined from Fig 2.1 - Design Thickness for Flexible Pavements. The upper pavement thickness entails the surface course, binder course and base. The pavement foundation entails the Subbase and Capping over the Subgrade (Soil). The overall thickness of the pavement foundation will be determined in accordance with HD25 assuming either Restricted Foundation Design (Classes 1,2 & 3) or Performance Foundation Design (Classes 1,2,3 & 4). Interim Advice Note IAN 73/06 Rev 1 (2009), will be utilised by this proforma as currently HD25 is in DRAFT form. Standard HD26/06 (Chapter 3 under Materials section) states that all materials within 450mm of the road surface, where the mean annual frost index (MAFI) of the site is ≥ 50 must be frost susceptible in the long-term. Where the MAFI is <50 the thickness of non-frost susceptible material may be 350mm.

Design Criteria

The designs are based on the design manual for roads and bridges, which in turn is based on the work of the Transport Research Laboratory. This design manual is only applicable to roads to be built in the UK and only for trunk roads, motorways and other multi-laned roads.

When comparing the relative benefits of the types of road, it is necessary to compare both over a similar time period. This is normally the design life, which is typically 20 years for flexible pavements. As such, it is necessary to take into consideration all maintenance costs

Upper pavement overall design thickness

Design life (flexible pavement)	life=20 years
Design traffic in msa units	dtr=75 msa
Upper pavement design thickness	dt=TABLE 4 for dtr=75
	=357.5 mm
	=360 mm (rounded up)

Upper pavement design options

(A) The following three options use HDM50 for binder & base courses

Option 1:

Surfacing (wearing course)	45 mm Hot Rolled Asphalt (HRA)
Binder course	55 mm High Density Macadam (HDM50)
Base	260 mm High Density Macadam (HDM50)

Option 2:

Surfacing (wearing course)	45 mm Hot Rolled Asphalt (HRA)
Base	315 mm High Density Macadam (HDM50)

Option 3:

Surfacing (wearing course)	50 mm Porous Asphalt (PA)
Binder course	60 mm High Density Macadam (HDM50)
Base	280 mm High Density Macadam (HDM50)

Choosing a PA surfacing with a standard 50mm thickness, the contribution to design thickness from PA will be taken to be 20mm only.

(B) The following three options use DBM50 for binder & base courses

Option 4:

Surfacing (wearing course)	45 mm Hot Rolled Asphalt (HRA)
Binder course	55 mm Dense Bitumen Macadam (DBM50)
Base	260 mm Dense Bitumen Macadam (DBM50)

Option 5:

Surfacing (wearing course)	45 mm Hot Rolled Asphalt (HRA)
Base	315 mm Dense Bitumen Macadam (DBM50)

Option 6:

Surfacing (wearing course)	50 mm Porous Asphalt (PA)
Binder course	60 mm Dense Bitumen Macadam (DBM50)
Base	280 mm Dense Bitumen Macadam (DBM50)

Choosing a PA surfacing with a standard 50mm thickness, the contribution to design thickness from PA will be taken to be 20mm only.

Foundation design

Restricted Foundation Design with Subbase & Capping layers provided as the design traffic is ≤ 80 million standard axles (msa). Subbase to be MCHW1 821, 822, or 840 soil cement: strength C3/4 or C5/6 and Capping to be MCHW1 Series 600 (see Foundation materials section).

Subgrade CBR (%)	CBR=3.5 %
Subgrade Stiffness Modulus	E=17.6*(CBR)^0.64=39.239 MPa
Subbase layer thickness	slt=TABLE 3.22 for E=39.239
	=253.81 mm
	=255 mm (rounded up)
Capping layer thickness	clt=TABLE 3.23 for E=39.239
	=231.9 mm
	=235 mm (rounded up)

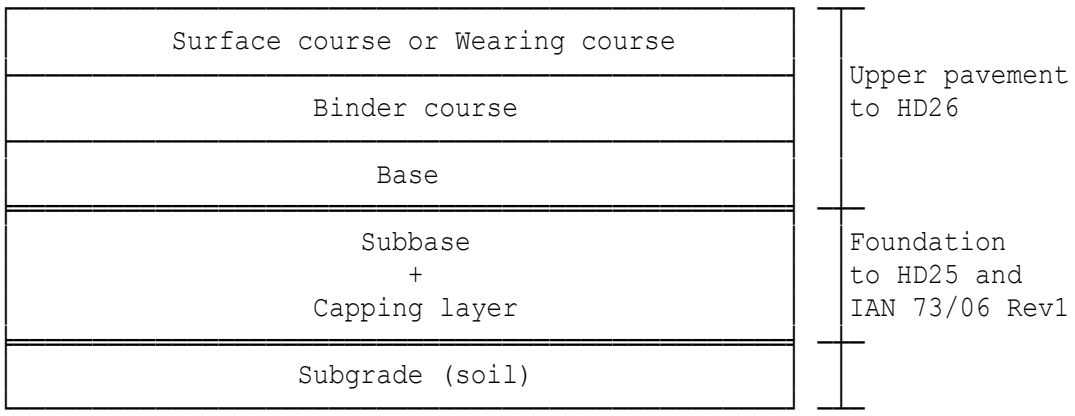

NOTE: Base could be in two layers (i.e. upper base & lower base).
Subbase could be in two layers (i.e. upper Subbase & lower Subbase)

Location: Ex4 - Leisure centre car park (Foundation Class 2)

The structural design of bituminous roads

The Highways Agency Design Manual for Roads and Bridges HD26/06 will be adopted for the upper pavement design. This standard provides details of permitted materials and thickness for the construction of pavements for new trunk roads. The total thickness of the combined bituminous layer will be determined from Fig 2.1 - Design Thickness for Flexible Pavements. The upper pavement thickness entails the surface course, binder course and base. The pavement foundation entails the Subbase and Capping over the Subgrade (Soil). The overall thickness of the pavement foundation will be determined in accordance with HD25 assuming either Restricted Foundation Design (Classes 1,2 & 3) or Performance Foundation Design (Classes 1,2,3 & 4). Interim Advice Note IAN 73/06 Rev 1 (2009), will be utilised by this proforma as currently HD25 is in DRAFT form. Standard HD26/06 (Chapter 3 under Materials section) states that all materials within 450mm of the road surface, where the mean annual frost index (MAFI) of the site is ≥ 50 must be frost susceptible in the long-term. Where the MAFI is <50 the thickness of non-frost susceptible material may be 350mm.

Design Criteria

The designs are based on the design manual for roads and bridges, which in turn is based on the work of the Transport Research Laboratory. This design manual is only applicable to roads to be built in the UK and only for trunk roads, motorways and other multi-laned roads.

When comparing the relative benefits of the types of road, it is necessary to compare both over a similar time period. This is normally the design life, which is typically 20 years for flexible pavements. As such, it is necessary to take into consideration all maintenance costs

Upper pavement overall design thickness

Design life (flexible pavement)	life=20 years
Design traffic in msa units	dtr=75 msa
Upper pavement design thickness	dt=TABLE 4 for dtr=75
	=357.5 mm
	=360 mm (rounded up)

Upper pavement design options

(A) The following three options use HDM50 for binder & base courses

Option 1:

Surfacing (wearing course)	45 mm Hot Rolled Asphalt (HRA)
Binder course	55 mm High Density Macadam (HDM50)
Base	260 mm High Density Macadam (HDM50)

Option 2:

Surfacing (wearing course)	45 mm Hot Rolled Asphalt (HRA)
Base	315 mm High Density Macadam (HDM50)

Option 3:

Surfacing (wearing course)	50 mm Porous Asphalt (PA)
Binder course	60 mm High Density Macadam (HDM50)
Base	280 mm High Density Macadam (HDM50)

Choosing a PA surfacing with a standard 50mm thickness, the contribution to design thickness from PA will be taken to be 20mm only.

(B) The following three options use DBM50 for binder & base courses

Option 4:

Surfacing (wearing course)	45 mm Hot Rolled Asphalt (HRA)
Binder course	55 mm Dense Bitumen Macadam (DBM50)
Base	260 mm Dense Bitumen Macadam (DBM50)

Option 5:

Surfacing (wearing course)	45 mm Hot Rolled Asphalt (HRA)
Base	315 mm Dense Bitumen Macadam (DBM50)

Option 6:

Surfacing (wearing course)	50 mm Porous Asphalt (PA)
Binder course	60 mm Dense Bitumen Macadam (DBM50)
Base	280 mm Dense Bitumen Macadam (DBM50)

Choosing a PA surfacing with a standard 50mm thickness, the contribution to design thickness from PA will be taken to be 20mm only.

Foundation design

Restricted Foundation Design with Subbase layer only provided. The design traffic is ≤ 80 million standard axles (msa). Subbase to be MCHW1 821, 822, or 840 soil cement: strength C3/4 or C5/6 (refer to Foundation materials section).

Subgrade CBR (%)	CBR=3.5 %
Subgrade Stiffness Modulus	E=17.6*(CBR)^0.64=39.239 MPa
Subbase layer thickness	slt=TABLE 3.13 for E=39.239
	=312.85 mm
	=315 mm (rounded up)

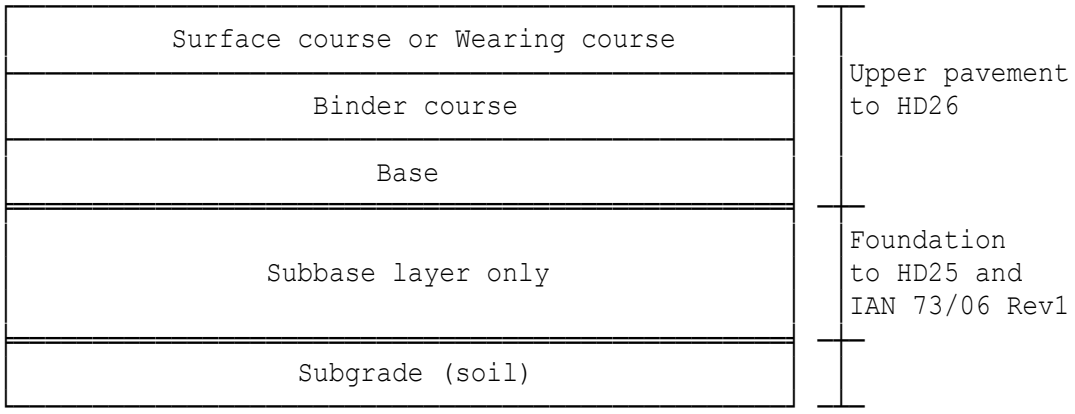

NOTE: Base could be in two layers (i.e. upper base & lower base).
Subbase could be in two layers (i.e. upper Subbase & lower Subbase)

Location: Ex5 - Leisure centre car park (Foundation Class 2)

The structural design of bituminous roads

The Highways Agency Design Manual for Roads and Bridges HD26/06 will be adopted for the upper pavement design. This standard provides details of permitted materials and thickness for the construction of pavements for new trunk roads. The total thickness of the combined bituminous layer will be determined from Fig 2.1 - Design Thickness for Flexible Pavements. The upper pavement thickness entails the surface course, binder course and base. The pavement foundation entails the Subbase and Capping over the Subgrade (Soil). The overall thickness of the pavement foundation will be determined in accordance with HD25 assuming either Restricted Foundation Design (Classes 1,2 & 3) or Performance Foundation Design (Classes 1,2,3 & 4). Interim Advice Note IAN 73/06 Rev 1 (2009), will be utilised by this proforma as currently HD25 is in DRAFT form. Standard HD26/06 (Chapter 3 under Materials section) states that all materials within 450mm of the road surface, where the mean annual frost index (MAFI) of the site is ≥ 50 must be frost susceptible in the long-term. Where the MAFI is <50 the thickness of non-frost susceptible material may be 350mm.

Design Criteria

The designs are based on the design manual for roads and bridges, which in turn is based on the work of the Transport Research Laboratory. This design manual is only applicable to roads to be built in the UK and only for trunk roads, motorways and other multi-laned roads.

When comparing the relative benefits of the types of road, it is necessary to compare both over a similar time period. This is normally the design life, which is typically 20 years for flexible pavements. As such, it is necessary to take into consideration all maintenance costs

Upper pavement overall design thickness

Design life (flexible pavement)	life=20 years
Design traffic in msa units	dtr=75 msa
Upper pavement design thickness	dt=TABLE 4 for dtr=75
	=357.5 mm
	=360 mm (rounded up)

Upper pavement design options

(A) The following three options use HDM50 for binder & base courses

Option 1:

Surfacing (wearing course)	45 mm Hot Rolled Asphalt (HRA)
Binder course	55 mm High Density Macadam (HDM50)
Base	260 mm High Density Macadam (HDM50)

Option 2:

Surfacing (wearing course)	45 mm Hot Rolled Asphalt (HRA)
Base	315 mm High Density Macadam (HDM50)

Option 3:

Surfacing (wearing course)	50 mm Porous Asphalt (PA)
Binder course	60 mm High Density Macadam (HDM50)
Base	280 mm High Density Macadam (HDM50)

Choosing a PA surfacing with a standard 50mm thickness, the contribution to design thickness from PA will be taken to be 20mm only.

(B) The following three options use DBM50 for binder & base courses

Option 4:

Surfacing (wearing course)	45 mm Hot Rolled Asphalt (HRA)
Binder course	55 mm Dense Bitumen Macadam (DBM50)
Base	260 mm Dense Bitumen Macadam (DBM50)

Option 5:

Surfacing (wearing course)	45 mm Hot Rolled Asphalt (HRA)
Base	315 mm Dense Bitumen Macadam (DBM50)

Option 6:

Surfacing (wearing course)	50 mm Porous Asphalt (PA)
Binder course	60 mm Dense Bitumen Macadam (DBM50)
Base	280 mm Dense Bitumen Macadam (DBM50)

Choosing a PA surfacing with a standard 50mm thickness, the contribution to design thickness from PA will be taken to be 20mm only.

Foundation design

Restricted Foundation Design with Subbase layer only provided. The design traffic is ≤ 80 million standard axles (msa). Subbase to be MCHW1 803, 804, 805 and 806 (see Foundation materials section).

WARNING:
Clause 804 (Subbase Type 2) may only be used for pavement design traffic levels up to 5 msa.

Subgrade CBR (%)	CBR=3.5 %
Subgrade Stiffness Modulus	E=17.6*(CBR)^0.64=39.239 MPa
Subbase layer thickness	slt=TABLE 3.12 for E=39.239
	=386.66 mm
	=390 mm (rounded up)

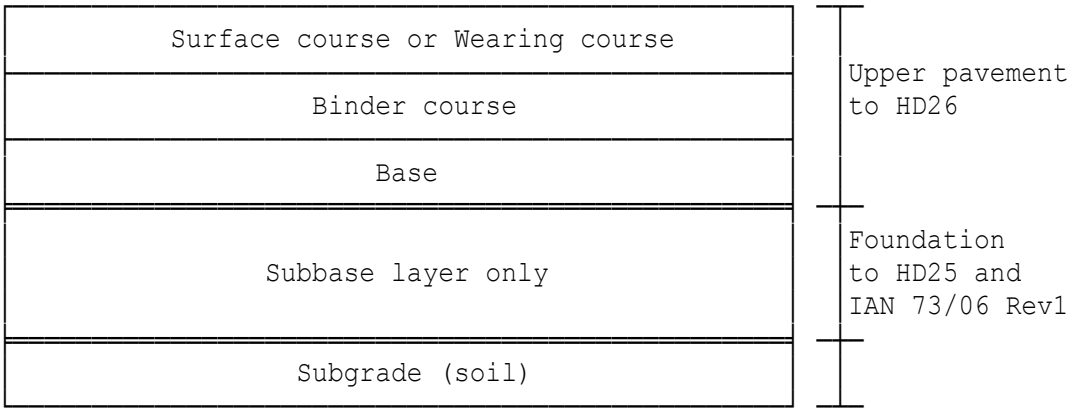

NOTE: Base could be in two layers (i.e. upper base & lower base).
Subbase could be in two layers (i.e. upper Subbase & lower Subbase)

Location: Ex6 - Leisure centre car park (Foundation Class 3)

The structural design of bituminous roads

The Highways Agency Design Manual for Roads and Bridges HD26/06 will be adopted for the upper pavement design. This standard provides details of permitted materials and thickness for the construction of pavements for new trunk roads. The total thickness of the combined bituminous layer will be determined from Fig 2.1 - Design Thickness for Flexible Pavements. The upper pavement thickness entails the surface course, binder course and base. The pavement foundation entails the Subbase and Capping over the Subgrade (Soil). The overall thickness of the pavement foundation will be determined in accordance with HD25 assuming either Restricted Foundation Design (Classes 1,2 & 3) or Performance Foundation Design (Classes 1,2,3 & 4). Interim Advice Note IAN 73/06 Rev 1 (2009), will be utilised by this proforma as currently HD25 is in DRAFT form. Standard HD26/06 (Chapter 3 under Materials section) states that all materials within 450mm of the road surface, where the mean annual frost index (MAFI) of the site is ≥ 50 must be frost susceptible in the long-term. Where the MAFI is <50 the thickness of non-frost susceptible material may be 350mm.

Design Criteria

The designs are based on the design manual for roads and bridges, which in turn is based on the work of the Transport Research Laboratory. This design manual is only applicable to roads to be built in the UK and only for trunk roads, motorways and other multi-laned roads.

When comparing the relative benefits of the types of road, it is necessary to compare both over a similar time period. This is normally the design life, which is typically 20 years for flexible pavements. As such, it is necessary to take into consideration all maintenance costs

Upper pavement overall design thickness

Design life (flexible pavement)	life=20 years
Design traffic in msa units	dtr=75 msa
Upper pavement design thickness	dt=TABLE 5 for dtr=75
	=320 mm
	=325 mm (rounded up)

Upper pavement design options

(A) The following three options use HDM50 for binder & base courses

Option 1:

Surfacing (wearing course)	45 mm Hot Rolled Asphalt (HRA)
Binder course	55 mm High Density Macadam (HDM50)
Base	225 mm High Density Macadam (HDM50)

Option 2:

Surfacing (wearing course)	45 mm Hot Rolled Asphalt (HRA)
Base	280 mm High Density Macadam (HDM50)

Option 3:

Surfacing (wearing course)	50 mm Porous Asphalt (PA)
Binder course	60 mm High Density Macadam (HDM50)
Base	245 mm High Density Macadam (HDM50)

Choosing a PA surfacing with a standard 50mm thickness, the contribution to design thickness from PA will be taken to be 20mm only.

(B) The following three options use DBM50 for binder & base courses

Option 4:

Surfacing (wearing course)	45 mm Hot Rolled Asphalt (HRA)
Binder course	55 mm Dense Bitumen Macadam (DBM50)
Base	225 mm Dense Bitumen Macadam (DBM50)

Option 5:

Surfacing (wearing course)	45 mm Hot Rolled Asphalt (HRA)
Base	280 mm Dense Bitumen Macadam (DBM50)

Option 6:

Surfacing (wearing course)	50 mm Porous Asphalt (PA)
Binder course	60 mm Dense Bitumen Macadam (DBM50)
Base	245 mm Dense Bitumen Macadam (DBM50)

Choosing a PA surfacing with a standard 50mm thickness, the contribution to design thickness from PA will be taken to be 20mm only.

Foundation design

Restricted Foundation Design with Subbase only provided. The design traffic is > 80 million standard axles (msa). Subbase to be MCHW1 821 or 822: strength C8/10 (see Foundation materials section).

Subgrade CBR (%)	CBR=3.5 %
Subgrade Stiffness Modulus	E=DE0(17.6*(CBR)^0.64)=39 MPa
Subbase layer thickness	slt=TABLE 3.14 for E=39
	=313.75 mm
	=315 mm (rounded up)

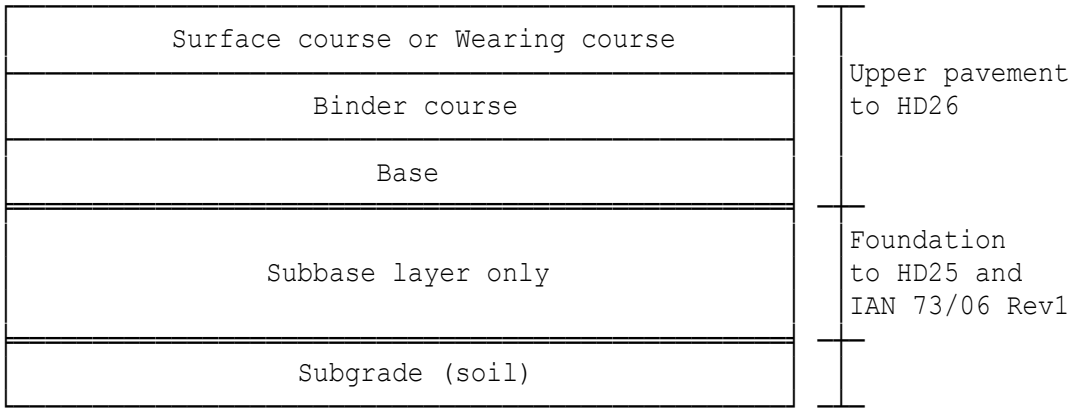

NOTE: Base could be in two layers (i.e. upper base & lower base).
Subbase could be in two layers (i.e. upper Subbase & lower Subbase)

Location: Ex7 - Performance Foundation Design (Foundation Class 4)

The structural design of bituminous roads

The Highways Agency Design Manual for Roads and Bridges HD26/06 will be adopted for the upper pavement design. This standard provides details of permitted materials and thickness for the construction of pavements for new trunk roads. The total thickness of the combined bituminous layer will be determined from Fig 2.1 - Design Thickness for Flexible Pavements. The upper pavement thickness entails the surface course, binder course and base. The pavement foundation entails the Subbase and Capping over the Subgrade (Soil). The overall thickness of the pavement foundation will be determined in accordance with HD25 assuming either Restricted Foundation Design (Classes 1,2 & 3) or Performance Foundation Design (Classes 1,2,3 & 4). Interim Advice Note IAN 73/06 Rev 1 (2009), will be utilised by this proforma as currently HD25 is in DRAFT form. Standard HD26/06 (Chapter 3 under Materials section) states that all materials within 450mm of the road surface, where the mean annual frost index (MAFI) of the site is ≥ 50 must be frost susceptible in the long-term. Where the MAFI is <50 the thickness of non-frost susceptible material may be 350mm.

Design Criteria

The designs are based on the design manual for roads and bridges, which in turn is based on the work of the Transport Research Laboratory. This design manual is only applicable to roads to be built in the UK and only for trunk roads, motorways and other multi-laned roads.

When comparing the relative benefits of the types of road, it is necessary to compare both over a similar time period. This is normally the design life, which is typically 20 years for flexible pavements. As such, it is necessary to take into consideration all maintenance costs

Upper pavement overall design thickness

Design life (flexible pavement)	life=20 years
Design traffic in msa units	dtr=75 msa
Upper pavement design thickness	dt=TABLE 6 for dtr=75
	=325 mm
	=330 mm (rounded up)

Upper pavement design options

(A) The following three options use HDM50 for binder & base courses

Option 1:

Surfacing (wearing course)	45 mm Hot Rolled Asphalt (HRA)
Binder course	55 mm High Density Macadam (HDM50)
Base	230 mm High Density Macadam (HDM50)

Option 2:

Surfacing (wearing course)	45 mm Hot Rolled Asphalt (HRA)
Base	285 mm High Density Macadam (HDM50)

Option 3:

Surfacing (wearing course)	50 mm Porous Asphalt (PA)
Binder course	60 mm High Density Macadam (HDM50)
Base	250 mm High Density Macadam (HDM50)

Choosing a PA surfacing with a standard 50mm thickness, the contribution to design thickness from PA will be taken to be 20mm only.

(B) The following three options use DBM50 for binder & base courses

Option 4:

Surfacing (wearing course)	45 mm Hot Rolled Asphalt (HRA)
Binder course	55 mm Dense Bitumen Macadam (DBM50)
Base	230 mm Dense Bitumen Macadam (DBM50)

Option 5:

Surfacing (wearing course)	45 mm Hot Rolled Asphalt (HRA)
Base	285 mm Dense Bitumen Macadam (DBM50)

Option 6:

Surfacing (wearing course)	50 mm Porous Asphalt (PA)
Binder course	60 mm Dense Bitumen Macadam (DBM50)
Base	250 mm Dense Bitumen Macadam (DBM50)

Choosing a PA surfacing with a standard 50mm thickness, the contribution to design thickness from PA will be taken to be 20mm only.

Foundation design

Performance Foundation Design with Subbase only layer provided. The design traffic is > 80 million standard axles (msa). The foundation completed surface must meet all the relevant criteria in Series 700 of the specification.

Subgrade CBR (%)	CBR=3 %

For performance design, the CBR must be converted to the Subgrade Stiffness Modulus (E) using the expression derived from work on certain soils (Powell et al, 1984), where CBR is a % value.

Subgrade Stiffness Modulus	E=17.6*(CBR)^0.64=35.553 MPa
Assumed Subbase layer stiffness	Sst=1000 MPa
Subbase layer thickness	clt=TABLE 4.51 for E=35.553
	=442.24 mm
	=445 mm (rounded up)

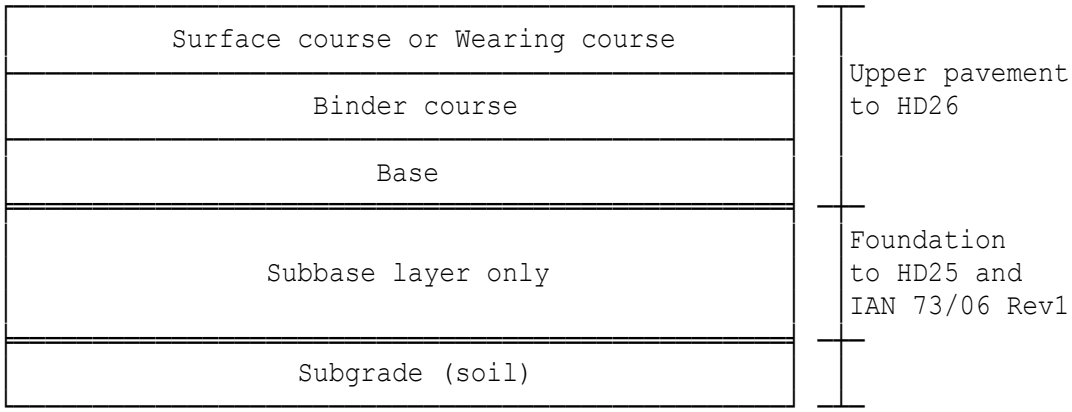

NOTE: Base could be in two layers (i.e. upper base & lower base).
Subbase could be in two layers (i.e. upper Subbase & lower Subbase)

Location: Ex8 - Performance Foundation Design (Foundation Class 4)

The structural design of bituminous roads

The Highways Agency Design Manual for Roads and Bridges HD26/06 will be adopted for the upper pavement design. This standard provides details of permitted materials and thickness for the construction of pavements for new trunk roads. The total thickness of the combined bituminous layer will be determined from Fig 2.1 - Design Thickness for Flexible Pavements. The upper pavement thickness entails the surface course, binder course and base. The pavement foundation entails the Subbase and Capping over the Subgrade (Soil). The overall thickness of the pavement foundation will be determined in accordance with HD25 assuming either Restricted Foundation Design (Classes 1,2 & 3) or Performance Foundation Design (Classes 1,2,3 & 4). Interim Advice Note IAN 73/06 Rev 1 (2009), will be utilised by this proforma as currently HD25 is in DRAFT form. Standard HD26/06 (Chapter 3 under Materials section) states that all materials within 450mm of the road surface, where the mean annual frost index (MAFI) of the site is ≥ 50 must be frost susceptible in the long-term. Where the MAFI is <50 the thickness of non-frost susceptible material may be 350mm.

Design Criteria

The designs are based on the design manual for roads and bridges, which in turn is based on the work of the Transport Research Laboratory. This design manual is only applicable to roads to be built in the UK and only for trunk roads, motorways and other multi-laned roads.

When comparing the relative benefits of the types of road, it is necessary to compare both over a similar time period. This is normally the design life, which is typically 20 years for flexible pavements. As such, it is necessary to take into consideration all maintenance costs

Upper pavement overall design thickness

Design life (flexible pavement)	life=20 years
Design traffic in msa units	dtr=75 msa
Upper pavement design thickness	dt=TABLE 6 for dtr=75
	=325 mm
	=330 mm (rounded up)

Upper pavement design options

(A) The following three options use HDM50 for binder & base courses

Option 1:

Surfacing (wearing course)	45 mm Hot Rolled Asphalt (HRA)
Binder course	55 mm High Density Macadam (HDM50)
Base	230 mm High Density Macadam (HDM50)

Option 2:

Surfacing (wearing course)	45 mm Hot Rolled Asphalt (HRA)
Base	285 mm High Density Macadam (HDM50)

Option 3:

Surfacing (wearing course)	50 mm Porous Asphalt (PA)
Binder course	60 mm High Density Macadam (HDM50)
Base	250 mm High Density Macadam (HDM50)

Choosing a PA surfacing with a standard 50mm thickness, the contribution to design thickness from PA will be taken to be 20mm only.

(B) The following three options use DBM50 for binder & base courses

Option 4:

Surfacing (wearing course)	45 mm Hot Rolled Asphalt (HRA)
Binder course	55 mm Dense Bitumen Macadam (DBM50)
Base	230 mm Dense Bitumen Macadam (DBM50)

Option 5:

Surfacing (wearing course)	45 mm Hot Rolled Asphalt (HRA)
Base	285 mm Dense Bitumen Macadam (DBM50)

Option 6:

Surfacing (wearing course)	50 mm Porous Asphalt (PA)
Binder course	60 mm Dense Bitumen Macadam (DBM50)
Base	250 mm Dense Bitumen Macadam (DBM50)

Choosing a PA surfacing with a standard 50mm thickness, the contribution to design thickness from PA will be taken to be 20mm only.

Foundation design

Performance Foundation Design with Subbase only layer provided. The design traffic is > 80 million standard axles (msa). The foundation completed surface must meet all the relevant criteria in Series 700 of the specification.

Subgrade CBR (%)	CBR=3 %

For performance design, the CBR must be converted to the Subgrade Stiffness Modulus (E) using the expression derived from work on certain soils (Powell et al, 1984), where CBR is a % value.

Subgrade Stiffness Modulus	E=17.6*(CBR)^0.64=35.553 MPa
Assumed Subbase layer stiffness	Sst=2000 MPa
Subbase layer thickness	clt=TABLE 4.52 for E=35.553
	=296.68 mm
	=300 mm (rounded up)

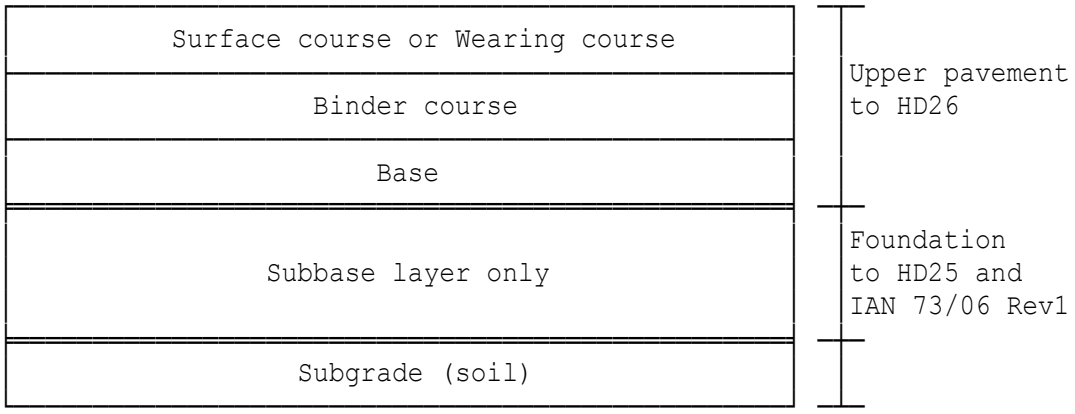

NOTE: Base could be in two layers (i.e. upper base & lower base).
Subbase could be in two layers (i.e. upper Subbase & lower Subbase)

Location: Ex9 - Performance Foundation Design (Foundation Class 3)

The structural design of bituminous roads

The Highways Agency Design Manual for Roads and Bridges HD26/06 will be adopted for the upper pavement design. This standard provides details of permitted materials and thickness for the construction of pavements for new trunk roads. The total thickness of the combined bituminous layer will be determined from Fig 2.1 - Design Thickness for Flexible Pavements. The upper pavement thickness entails the surface course, binder course and base. The pavement foundation entails the Subbase and Capping over the Subgrade (Soil). The overall thickness of the pavement foundation will be determined in accordance with HD25 assuming either Restricted Foundation Design (Classes 1,2 & 3) or Performance Foundation Design (Classes 1,2,3 & 4). Interim Advice Note IAN 73/06 Rev 1 (2009), will be utilised by this proforma as currently HD25 is in DRAFT form. Standard HD26/06 (Chapter 3 under Materials section) states that all materials within 450mm of the road surface, where the mean annual frost index (MAFI) of the site is ≥ 50 must be frost susceptible in the long-term. Where the MAFI is <50 the thickness of non-frost susceptible material may be 350mm.

Design Criteria

The designs are based on the design manual for roads and bridges, which in turn is based on the work of the Transport Research Laboratory. This design manual is only applicable to roads to be built in the UK and only for trunk roads, motorways and other multi-laned roads.

When comparing the relative benefits of the types of road, it is necessary to compare both over a similar time period. This is normally the design life, which is typically 20 years for flexible pavements. As such, it is necessary to take into consideration all maintenance costs

Upper pavement overall design thickness

Design life (flexible pavement)	life=20 years
Design traffic in msa units	dtr=75 msa
Upper pavement design thickness	dt=TABLE 5 for dtr=75
	=320 mm
	=325 mm (rounded up)

Upper pavement design options

(A) The following three options use HDM50 for binder & base courses

Option 1:

Surfacing (wearing course)	45 mm Hot Rolled Asphalt (HRA)
Binder course	55 mm High Density Macadam (HDM50)
Base	225 mm High Density Macadam (HDM50)

Option 2:

Surfacing (wearing course)	45 mm Hot Rolled Asphalt (HRA)
Base	280 mm High Density Macadam (HDM50)

Option 3:

Surfacing (wearing course)	50 mm Porous Asphalt (PA)
Binder course	60 mm High Density Macadam (HDM50)
Base	245 mm High Density Macadam (HDM50)

Choosing a PA surfacing with a standard 50mm thickness, the contribution to design thickness from PA will be taken to be 20mm only.

(B) The following three options use DBM50 for binder & base courses

Option 4:

Surfacing (wearing course)	45 mm Hot Rolled Asphalt (HRA)
Binder course	55 mm Dense Bitumen Macadam (DBM50)
Base	225 mm Dense Bitumen Macadam (DBM50)

Option 5:

Surfacing (wearing course)	45 mm Hot Rolled Asphalt (HRA)
Base	280 mm Dense Bitumen Macadam (DBM50)

Option 6:

Surfacing (wearing course)	50 mm Porous Asphalt (PA)
Binder course	60 mm Dense Bitumen Macadam (DBM50)
Base	245 mm Dense Bitumen Macadam (DBM50)

Choosing a PA surfacing with a standard 50mm thickness, the contribution to design thickness from PA will be taken to be 20mm only.

Foundation design

Performance Foundation Design with Subbase only layer provided. The design traffic is > 80 million standard axles (msa). The foundation completed surface must meet all the relevant criteria in Series 700 of the specification.

Subgrade CBR (%)	CBR=3 %

For performance design, the CBR must be converted to the Subgrade Stiffness Modulus (E) using the expression derived from work on certain soils (Powell et al, 1984), where CBR is as a % value.

Subgrade Stiffness Modulus	E=17.6*(CBR)^0.64=35.553 MPa
Assumed Subbase layer stiffness	Sst=1000 MPa
Subbase layer thickness	clt=TABLE 4.43 for E=35.553
	=221.12 mm
	=225 mm (rounded up)

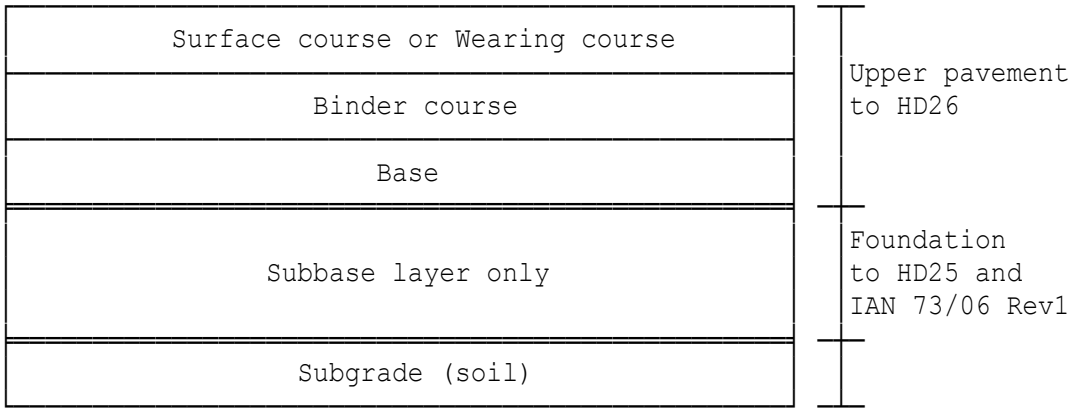

NOTE: Base could be in two layers (i.e. upper base & lower base).
Subbase could be in two layers (i.e. upper Subbase & lower Subbase)

Location: Ex10 - Performance Foundation Design (Foundation Class 2)

The structural design of bituminous roads

The Highways Agency Design Manual for Roads and Bridges HD26/06 will be adopted for the upper pavement design. This standard provides details of permitted materials and thickness for the construction of pavements for new trunk roads. The total thickness of the combined bituminous layer will be determined from Fig 2.1 - Design Thickness for Flexible Pavements. The upper pavement thickness entails the surface course, binder course and base. The pavement foundation entails the Subbase and Capping over the Subgrade (Soil). The overall thickness of the pavement foundation will be determined in accordance with HD25 assuming either Restricted Foundation Design (Classes 1,2 & 3) or Performance Foundation Design (Classes 1,2,3 & 4). Interim Advice Note IAN 73/06 Rev 1 (2009), will be utilised by this proforma as currently HD25 is in DRAFT form. Standard HD26/06 (Chapter 3 under Materials section) states that all materials within 450mm of the road surface, where the mean annual frost index (MAFI) of the site is ≥ 50 must be frost susceptible in the long-term. Where the MAFI is <50 the thickness of non-frost susceptible material may be 350mm.

Design Criteria

The designs are based on the design manual for roads and bridges, which in turn is based on the work of the Transport Research Laboratory. This design manual is only applicable to roads to be built in the UK and only for trunk roads, motorways and other multi-laned roads.

When comparing the relative benefits of the types of road, it is necessary to compare both over a similar time period. This is normally the design life, which is typically 20 years for flexible pavements. As such, it is necessary to take into consideration all maintenance costs

Upper pavement overall design thickness

Design life (flexible pavement)	life=20 years
Design traffic in msa units	dtr=75 msa
Upper pavement design thickness	dt=TABLE 4 for dtr=75
	=357.5 mm
	=360 mm (rounded up)

Upper pavement design options

(A) The following three options use HDM50 for binder & base courses

Option 1:

Surfacing (wearing course)	45 mm Hot Rolled Asphalt (HRA)
Binder course	55 mm High Density Macadam (HDM50)
Base	260 mm High Density Macadam (HDM50)

Option 2:

Surfacing (wearing course)	45 mm Hot Rolled Asphalt (HRA)
Base	315 mm High Density Macadam (HDM50)

Option 3:

Surfacing (wearing course)	50 mm Porous Asphalt (PA)
Binder course	60 mm High Density Macadam (HDM50)
Base	280 mm High Density Macadam (HDM50)

Choosing a PA surfacing with a standard 50mm thickness, the contribution to design thickness from PA will be taken to be 20mm only.

(B) The following three options use DBM50 for binder & base courses

Option 4:

Surfacing (wearing course)	45 mm Hot Rolled Asphalt (HRA)
Binder course	55 mm Dense Bitumen Macadam (DBM50)
Base	260 mm Dense Bitumen Macadam (DBM50)

Option 5:

Surfacing (wearing course)	45 mm Hot Rolled Asphalt (HRA)
Base	315 mm Dense Bitumen Macadam (DBM50)

Option 6:

Surfacing (wearing course)	50 mm Porous Asphalt (PA)
Binder course	60 mm Dense Bitumen Macadam (DBM50)
Base	280 mm Dense Bitumen Macadam (DBM50)

Choosing a PA surfacing with a standard 50mm thickness, the contribution to design thickness from PA will be taken to be 20mm only.

Foundation design

Performance Foundation Design with Subbase only layer provided. The design traffic is ≤ 80 million standard axles (msa). The foundation completed surface must meet all the relevant criteria in Series 700 of the specification.

Subgrade CBR (%)	CBR=3 %

For performance design, the CBR must be converted to the Subgrade Stiffness Modulus (E) using the expression derived from work on certain soils (Powell et al, 1984), where CBR is as a % value.

Subgrade Stiffness Modulus	E=17.6*(CBR)^0.64=35.553 MPa
Assumed Subbase layer stiffness	Sst=200 MPa
Subbase layer thickness	slt=TABLE 4.32 for E=35.553
	=293.36 mm
	=295 mm (rounded up)

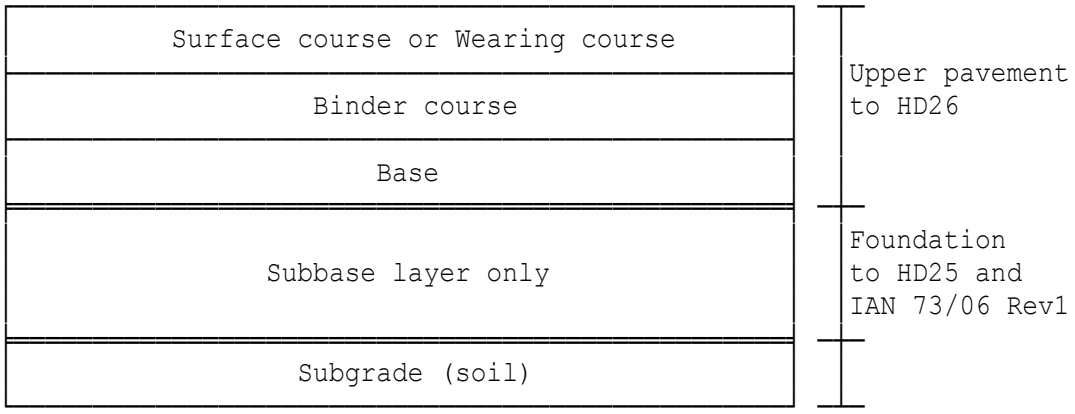

NOTE: Base could be in two layers (i.e. upper base & lower base).
Subbase could be in two layers (i.e. upper Subbase & lower Subbase)

Location: Ex11 - Performance Foundation Design (Foundation Class 2)

The structural design of bituminous roads

The Highways Agency Design Manual for Roads and Bridges HD26/06 will be adopted for the upper pavement design. This standard provides details of permitted materials and thickness for the construction of pavements for new trunk roads. The total thickness of the combined bituminous layer will be determined from Fig 2.1 - Design Thickness for Flexible Pavements. The upper pavement thickness entails the surface course, binder course and base. The pavement foundation entails the Subbase and Capping over the Subgrade (Soil). The overall thickness of the pavement foundation will be determined in accordance with HD25 assuming either Restricted Foundation Design (Classes 1,2 & 3) or Performance Foundation Design (Classes 1,2,3 & 4). Interim Advice Note IAN 73/06 Rev 1 (2009), will be utilised by this proforma as currently HD25 is in DRAFT form. Standard HD26/06 (Chapter 3 under Materials section) states that all materials within 450mm of the road surface, where the mean annual frost index (MAFI) of the site is ≥ 50 must be frost susceptible in the long-term. Where the MAFI is <50 the thickness of non-frost susceptible material may be 350mm.

Design Criteria

The designs are based on the design manual for roads and bridges, which in turn is based on the work of the Transport Research Laboratory. This design manual is only applicable to roads to be built in the UK and only for trunk roads, motorways and other multi-laned roads.

When comparing the relative benefits of the types of road, it is necessary to compare both over a similar time period. This is normally the design life, which is typically 20 years for flexible pavements. As such, it is necessary to take into consideration all maintenance costs

Upper pavement overall design thickness

Design life (flexible pavement)	life=20 years
Design traffic in msa units	dtr=75 msa
Upper pavement design thickness	dt=TABLE 4 for dtr=75
	=357.5 mm
	=360 mm (rounded up)

Upper pavement design options

(A) The following three options use HDM50 for binder & base courses

Option 1:

Surfacing (wearing course)	45 mm Hot Rolled Asphalt (HRA)
Binder course	55 mm High Density Macadam (HDM50)
Base	260 mm High Density Macadam (HDM50)

Option 2:

Surfacing (wearing course)	45 mm Hot Rolled Asphalt (HRA)
Base	315 mm High Density Macadam (HDM50)

Option 3:

Surfacing (wearing course)	50 mm Porous Asphalt (PA)
Binder course	60 mm High Density Macadam (HDM50)
Base	280 mm High Density Macadam (HDM50)

Choosing a PA surfacing with a standard 50mm thickness, the contribution to design thickness from PA will be taken to be 20mm only.

(B) The following three options use DBM50 for binder & base courses

Option 4:

Surfacing (wearing course)	45 mm Hot Rolled Asphalt (HRA)
Binder course	55 mm Dense Bitumen Macadam (DBM50)
Base	260 mm Dense Bitumen Macadam (DBM50)

Option 5:

Surfacing (wearing course)	45 mm Hot Rolled Asphalt (HRA)
Base	315 mm Dense Bitumen Macadam (DBM50)

Option 6:

Surfacing (wearing course)	50 mm Porous Asphalt (PA)
Binder course	60 mm Dense Bitumen Macadam (DBM50)
Base	280 mm Dense Bitumen Macadam (DBM50)

Choosing a PA surfacing with a standard 50mm thickness, the contribution to design thickness from PA will be taken to be 20mm only.

Foundation design

Performance Foundation Design with Subbase and Capping layers provided. The design traffic is ≤ 80 million standard axles (msa). The foundation completed surface must meet all the relevant criteria in Series 700 of the specification.

Subgrade CBR (%)	CBR=3 %

For performance design, the CBR must be converted to the Subgrade Stiffness Modulus (E) using the expression derived from work on certain soils (Powell et al, 1984), where CBR is as a % value.

Subgrade Stiffness Modulus	E=17.6*(CBR)^0.64=35.553 MPa
Assumed Subbase layer stiffness	Sst=350 MPa
Subbase layer thickness	slt=TABLE 4.63 for E=35.553
	=150 mm
	=155 mm (rounded up)
Assumed Capping layer stiffness	Cst=75 MPa
Capping layer thickness	clt=TABLE 4.64 for E=35.553
	=241.12 mm
	=245 mm (rounded up)

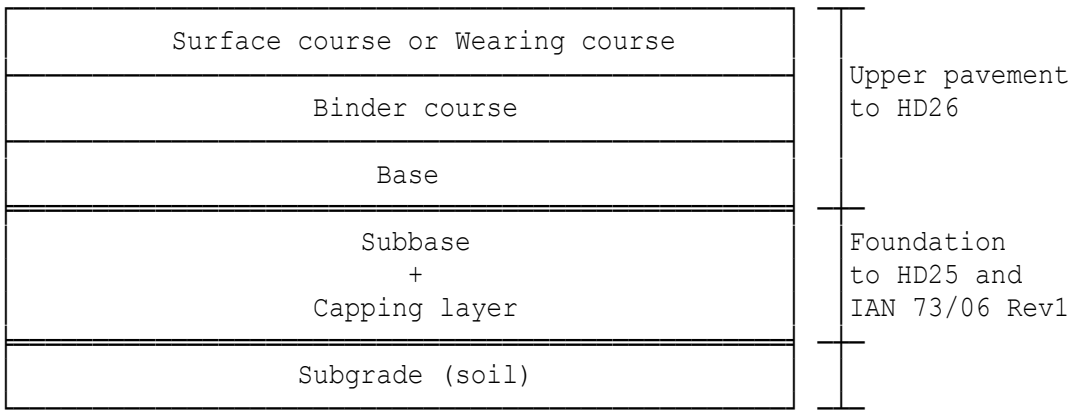

NOTE: Base could be in two layers (i.e. upper base & lower base).
Subbase could be in two layers (i.e. upper Subbase & lower Subbase)

Location: Ex12 - Performance Foundation Design (Foundation Class 1)

The structural design of bituminous roads

The Highways Agency Design Manual for Roads and Bridges HD26/06 will be adopted for the upper pavement design. This standard provides details of permitted materials and thickness for the construction of pavements for new trunk roads. The total thickness of the combined bituminous layer will be determined from Fig 2.1 - Design Thickness for Flexible Pavements. The upper pavement thickness entails the surface course, binder course and base. The pavement foundation entails the Subbase and Capping over the Subgrade (Soil). The overall thickness of the pavement foundation will be determined in accordance with HD25 assuming either Restricted Foundation Design (Classes 1,2 & 3) or Performance Foundation Design (Classes 1,2,3 & 4). Interim Advice Note IAN 73/06 Rev 1 (2009), will be utilised by this proforma as currently HD25 is in DRAFT form. Standard HD26/06 (Chapter 3 under Materials section) states that all materials within 450mm of the road surface, where the mean annual frost index (MAFI) of the site is ≥ 50 must be frost susceptible in the long-term. Where the MAFI is <50 the thickness of non-frost susceptible material may be 350mm.

Design Criteria

The designs are based on the design manual for roads and bridges, which in turn is based on the work of the Transport Research Laboratory. This design manual is only applicable to roads to be built in the UK and only for trunk roads, motorways and other multi-laned roads.

When comparing the relative benefits of the types of road, it is necessary to compare both over a similar time period. This is normally the design life, which is typically 20 years for flexible pavements. As such, it is necessary to take into consideration all maintenance costs

Upper pavement overall design thickness

Design life (flexible pavement)	life=20 years
Design traffic in msa units	dtr=20 msa
Upper pavement design thickness	dt=TABLE 3 for dtr=20
	=320 mm
	=325 mm (rounded up)

Upper pavement design options

(A) The following three options use HDM50 for binder & base courses

Option 1:

Surfacing (wearing course)	45 mm Hot Rolled Asphalt (HRA)
Binder course	55 mm High Density Macadam (HDM50)
Base	225 mm High Density Macadam (HDM50)

Option 2:

Surfacing (wearing course)	45 mm Hot Rolled Asphalt (HRA)
Base	280 mm High Density Macadam (HDM50)

Option 3:

Surfacing (wearing course)	50 mm Porous Asphalt (PA)
Binder course	60 mm High Density Macadam (HDM50)
Base	245 mm High Density Macadam (HDM50)

Choosing a PA surfacing with a standard 50mm thickness, the contribution to design thickness from PA will be taken to be 20mm only.

(B) The following three options use DBM50 for binder & base courses

Option 4:

Surfacing (wearing course)	45 mm Hot Rolled Asphalt (HRA)
Binder course	55 mm Dense Bitumen Macadam (DBM50)
Base	225 mm Dense Bitumen Macadam (DBM50)

Option 5:

Surfacing (wearing course)	45 mm Hot Rolled Asphalt (HRA)
Base	280 mm Dense Bitumen Macadam (DBM50)

Option 6:

Surfacing (wearing course)	50 mm Porous Asphalt (PA)
Binder course	60 mm Dense Bitumen Macadam (DBM50)
Base	245 mm Dense Bitumen Macadam (DBM50)

Choosing a PA surfacing with a standard 50mm thickness, the contribution to design thickness from PA will be taken to be 20mm only.

Foundation design

Performance Foundation Design with Capping only layer provided. The design traffic is ≤ 20 million standard axles (msa). The foundation completed surface must meet all the relevant criteria in Series 700 of the specification.

Subgrade CBR (%)	CBR=3 %

For performance design, the CBR must be converted to the Subgrade Stiffness Modulus (E) using the expression derived from work on certain soils (Powell et al, 1984), where CBR is as a % value.

Subgrade Stiffness Modulus	E=DE0(17.6*(CBR)^0.64)=36 MPa
Assumed Capping layer stiffness	Cst=50 MPa
Subbase layer thickness	clt=TABLE 4.21 for E=36
	=456 mm
	=460 mm (rounded up)

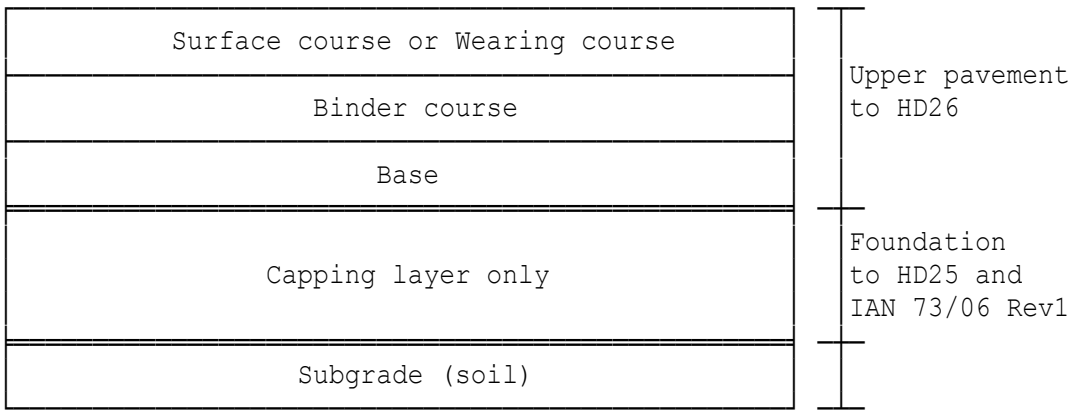

NOTE: Base could be in two layers (i.e. upper base & lower base)

Location: Example of soil pressures due to coal stack

Soil pressures due to coal and other stacks

It is sometimes necessary to pile in the vicinity of coal and other stacks. The stack produces a vertical and horizontal stress and accompanying shear stress thus:

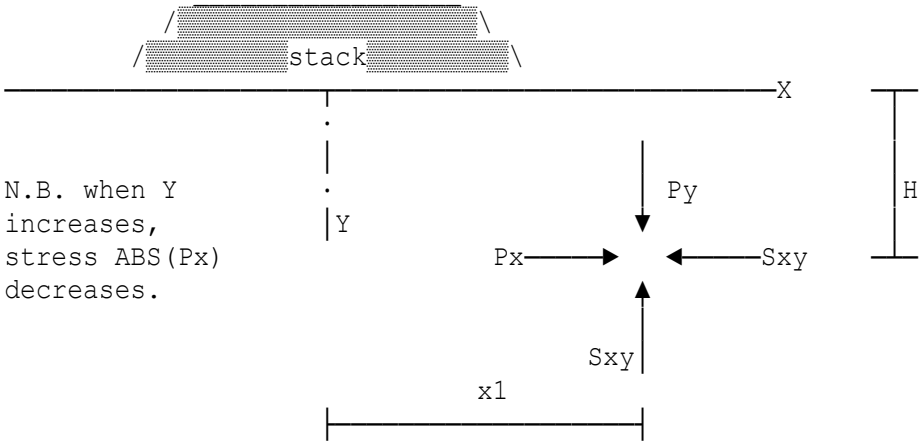

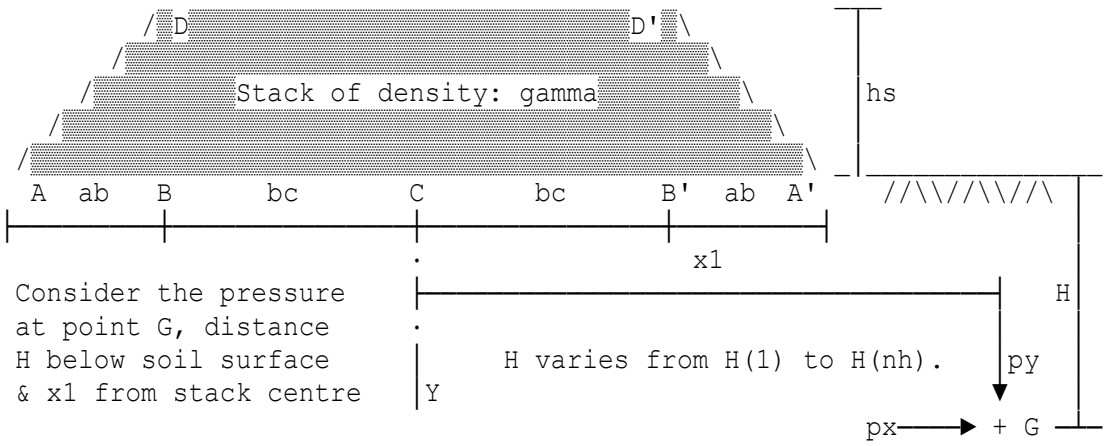

Density of stack	gamma=11 kN/m³
Height of stack	hs=6 m
Distance between A & B	ab=7.2 m
Distance between B & C	bc=15 m
Distance from stack c.l. to G	x1=24.6 m
Number of values of H()	nh=2

Location: Example 5.1(b)

Stresses due to concentrated load

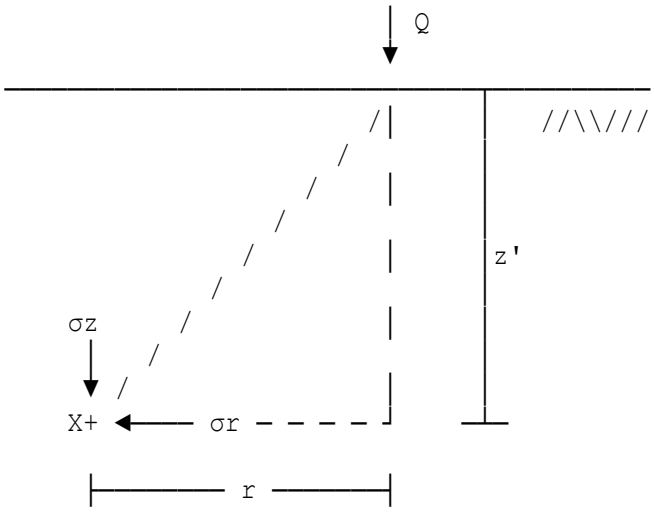

Concentrated load	Q=1500 kN
Depth to point X	z'=5 m
Horizontal distance	r=2 m
Poisson's ratio (typically 0.5)	nu=0.5

Radial stress: sigmar=Q/(2*PI)*(3*r^2*z'/d^2.5-(1-2*nu)/(d+z'*d^0.5))
=3.1628 kN/m²

Tangential stress: sigmat=-Q/(2*PI)*(1-2*nu)*(z'/d^1.5-1/(d+z'*d^0.5))
=0 kN/m²

Shear stress: taurz=3*Q/(2*PI)*(r*z'^2/d^2.5)=7.9069 kN/m²

Location: Example 5.1(b)

Vertical stress due to general loading

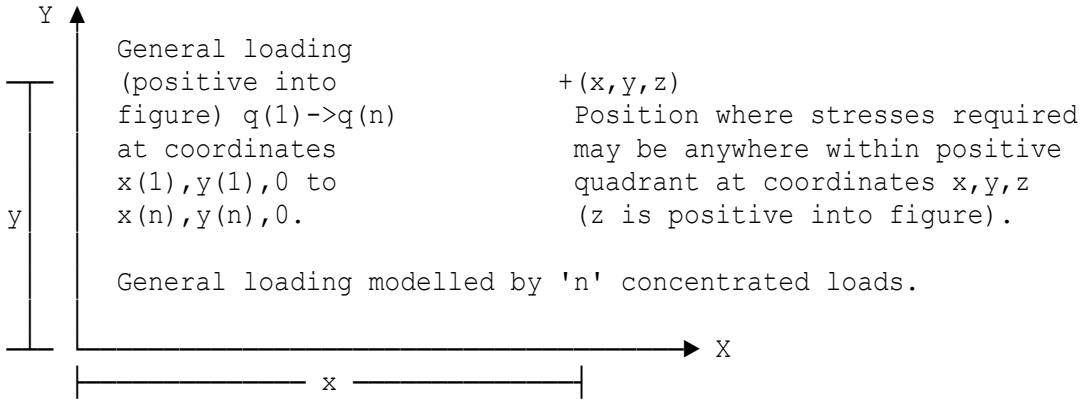

X coordinate where stress reqd	x=1 m
Y coordinate where stress reqd	y=1 m
Z coordinate where stress reqd	z=5 m
Number of concentrated loads	n=4
Magnitude of load No. 1	q(1)=375 kN
X coordinate of load position	x(1)=0.5 m
Y coordinate of load position	y(1)=1.5 m
Magnitude of load No. 2	q(2)=375 kN
X coordinate of load position	x(2)=1.5 m
Y coordinate of load position	y(2)=1.5 m
Magnitude of load No. 3	q(3)=375 kN
X coordinate of load position	x(3)=0.5 m
Y coordinate of load position	y(3)=0.5 m
Magnitude of load No. 4	q(4)=375 kN
X coordinate of load position	x(4)=1.5 m
Y coordinate of load position	y(4)=0.5 m
Total vertical stress	sigmaz=27.264 kN/m²

Location: Example 5.1

Elastic stresses resulting from UDL on rectangular area

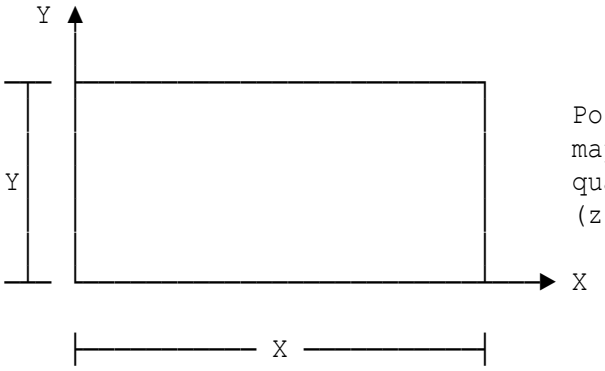

Position where stresses required may be anywhere within positive quadrant at coordinates x,y,z (z is positive downwards).

Length of foundation	X=2 m
Breadth of foundation	Y=2 m
Total load on foundation	Q=1500 kN
X coordinate where stresses reqd.	x=1 m
Y coordinate where stresses reqd.	y=1 m
Depth where stresses required	z=5 m
Number of strips parallel to X	nx=4
Number of strips parallel to Y	ny=4
UDL from rectangular foundation	q=Q/(X*Y)=375 kN/m²
Load on each element	delQ=Q/(nx*ny)=93.75 kN
Vertical stress at coords (x,y,z)	σz=26.955 kN/m²

Location: Typical calc for straight shafted bored pile in clay

Vertical loads on straight bored piles in clay

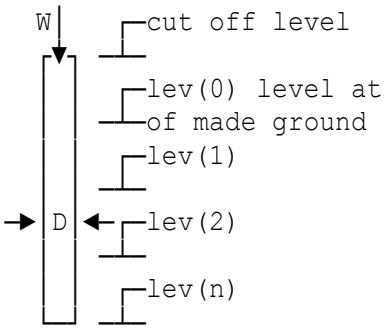

Adhesion factor (alpha) varies from 0.3 to 0.6 typically 0.45 for clay. The levels at underside of each of 'n' soil increments are given with corresponding shear strengths of clay.

Unfactored load on top of pile	W=550 kN
Pile diameter	D=400 mm
Concrete cube strength	fcu=35 N/mm²
Adhesion factor	alpha=0.45
Factor of safety for friction	FOSf=2.5
Factor of safety for end bearing	FOSb=2.5
Cut off level	cut=50.4 m
Level at underside of made ground	lev(0)=48.4 m
Shear strength u/side made ground	C(0)=+C(0) kN/m²
Number of soil increments	n=3
Level at u/side increment 1	lev(1)=40.4 m
Shear strength at u/side inc 1	C(1)=90 kN/m²
Level at u/side increment 2	lev(2)=30.4 m
Shear strength at u/side inc 2	C(2)=140 kN/m²
Level at u/side increment 3	lev(3)=24.4 m
Shear strength at u/side inc 3	C(3)=200 kN/m²

DESIGN SUMMARY

Pile load	**550 kN**
Pile capacity	**550 kN**
Pile diameter	**400 mm**
Cut off level	**50.4 m**
Pile length	**22.2 m**
Concrete cube strength	**35 N/mm²**

Location: Typical calc for straight shafted bored pile in clay

Vertical loads on straight bored piles in clay

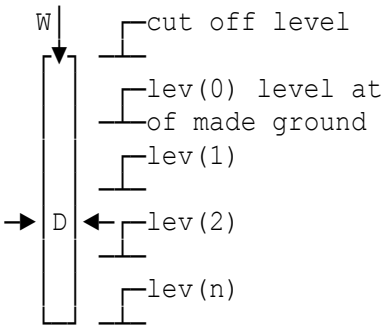

Adhesion factor (alpha) varies from 0.3 to 0.6 typically 0.45 for clay. The levels at underside of each of 'n' soil increments are given with corresponding shear strengths of clay.

Unfactored load on top of pile	W=550 kN
Pile diameter	D=400 mm
Char cylinder compress strength	fck=28 N/mm² (concrete)
Concrete cube strength	fcu=35 N/mm²
Adhesion factor	alpha=0.45
Factor of safety for friction	FOSf=2.5
Factor of safety for end bearing	FOSb=2.5
Cut off level	cut=50.4 m
Level at underside of made ground	lev(0)=48.4 m
Shear strength u/side made ground	C(0)=+C(0) kN/m²
Number of soil increments	n=3
Level at u/side increment 1	lev(1)=40.4 m
Shear strength at u/side inc 1	C(1)=90 kN/m²
Level at u/side increment 2	lev(2)=30.4 m
Shear strength at u/side inc 2	C(2)=140 kN/m²
Level at u/side increment 3	lev(3)=24.4 m
Shear strength at u/side inc 3	C(3)=200 kN/m²

DESIGN SUMMARY

Pile load	**550 kN**
Pile capacity	**550 kN**
Pile diameter	**400 mm**
Cut off level	**50.4 m**
Pile length	**22.2 m**
Char cylinder strength	**28 N/mm² (concrete)**
Concrete cube strength	**35 N/mm²**

Location: Large diameter belled pile in clay

Large diameter belled piles in clay

Safe working load on pile is least of: SWL(1)=(Uf+Ub)/2.5
SWL(2)=Uf+Ub/3
SWL(3)=Uf+lws*Ab where
Ab=area of bell and where
base stress is limited to
lws kN/m² working.

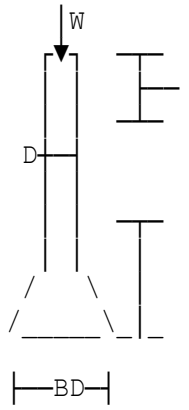

made ground

Shaft friction value alpha varies from 0.25 to 0.35.
Advice sought from soils investigation specialist.

Ignore shaft cohesion for length of 2 x bell diameter.

Bell diameter BD normally 2.5 x shaft diameter
max 3 x shaft diameter.
Bearing capacity factor typically 0.75x9 used for circular piles. Advice sought from soils investigation specialist.

Unfactored load on top of pile	W=2500 kN
Pile diameter	D=0.9 m
Bell diameter	BD=2.25 m
Limiting working stress on base	lws=500 kN/m²
Concrete cube strength	fcu=35 N/mm²
Shaft friction value	alpha=0.35
Bearing capacity factor	Nc=6.75

Soil properties

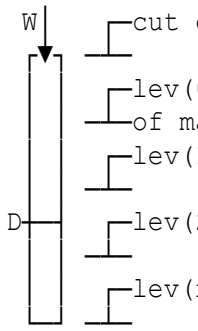

cut off level

lev(0) level at underside of made ground

lev(1)

lev(2)

lev(n)

Each soil layer must be greater than 4.5 m for design method used.

The levels at underside of each of 'n' soil increments are given with corresponding shear strengths of clay.

Cut off level	cut=50 m
Level at underside of made ground	lev(0)=48 m
Shear strength u/side made ground	C(0)=70 kN/m²
Number of soil increments	n=3
Level at u/side increment 1	lev(1)=40 m
Shear strength at u/side inc 1	C(1)=90 kN/m²
Level at u/side increment 2	lev(2)=30 m

Shear strength at u/side inc 2	C(2)=140 kN/m²
Level at u/side increment 3	lev(3)=20 m
Shear strength at u/side inc 3	C(3)=250 kN/m²

DESIGN SUMMARY

Pile load	**2500 kN**
Pile capacity	**2501.9 kN**
Pile diameter	**0.9 m**
Pile bell diameter	**2.25 m**
Cut off level	**50 m**
Pile length	**23.1 m**
Concrete cube strength	**35 N/mm²**

Location:

Large diameter belled piles in clay

Safe working load on pile is least of: SWL(1)=(Uf+Ub)/2.5
SWL(2)=Uf+Ub/3
SWL(3)=Uf+lws*Ab where
Ab=area of bell and where
base stress is limited to
lws kN/m² working.

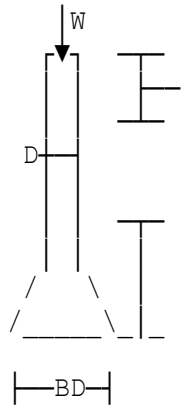

made ground

Shaft friction value alpha varies from 0.25 to 0.35.
Advice sought from soils investigation specialist.

Ignore shaft cohesion for length of 2 x bell diameter.

Bell diameter BD normally 2.5 x shaft diameter
max 3 x shaft diameter.
Bearing capacity factor typically 0.75x9 used for circular piles. Advice sought from soils investigation specialist.

Unfactored load on top of pile	W=2300 kN
Pile diameter	D=0.9 m
Bell diameter	BD=2.25 m
Limiting working stress on base	lws=500 kN/m²
Overall pile length	Lo=22.5 m
Concrete cube strength	fcu=35 N/mm²
Shaft friction value	alpha=0.35
Bearing capacity factor	Nc=6.75

Soil properties

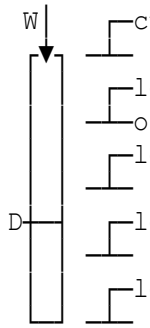

cut off level

lev(0) level at underside of made ground

lev(1)

lev(2)

lev(n)

Each soil layer must be greater than 4.5 m for design method used.

The levels at underside of each of 'n' soil increments are given with corresponding shear strengths of clay.

Cut off level	cut=50 m
Level at underside of made ground	lev(0)=48 m
Shear strength u/side made ground	C(0)=70 kN/m²
Number of soil increments	n=3
Level at u/side increment 1	lev(1)=40 m
Shear strength at u/side inc 1	C(1)=90 kN/m²

Level at u/side increment 2	lev(2)=30 m
Shear strength at u/side inc 2	C(2)=140 kN/m²
Level at u/side increment 3	lev(3)=20 m
Shear strength at u/side inc 3	C(3)=250 kN/m²

DESIGN SUMMARY

Pile load	**2300 kN**
Pile capacity	**2399.9 kN**
Pile diameter	**0.9 m**
Pile bell diameter	**2.25 m**
Cut off level	**50 m**
Pile length	**22.5 m**
Concrete cube strength	**35 N/mm²**

Location: Crane type 1

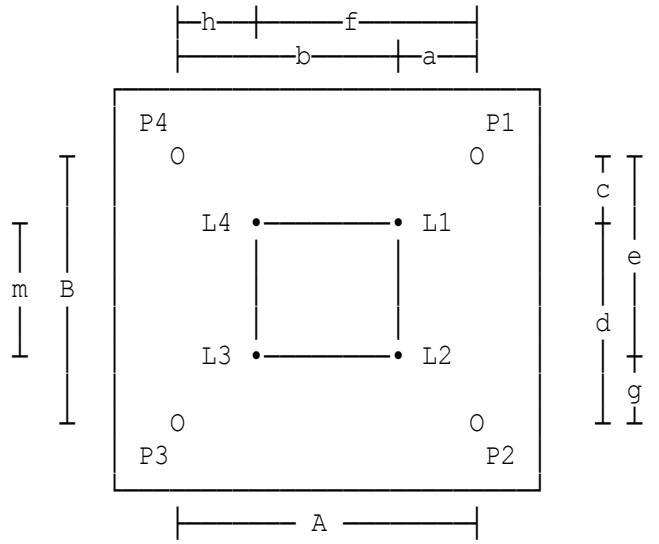

Reference to symbols

P1 = load on pile 1
P2 = load on pile 2
P3 = load on pile 3
P4 = load on pile 4

L1 = load on crane leg 1
L2 = load on crane leg 2
L3 = load on crane leg 3
L4 = load on crane leg 4

O = pile position

Dimension	a=1 m
Dimension	b=2 m
Dimension	c=1 m
Dimension	d=2 m
Dimension	m=1 m
Dimension	A=a+b=3 m
Dimension	B=c+d=3 m
Dimension	e=c+m=2 m
Dimension	f=a+m=2 m
Dimension	g=B-e=1 m
Dimension	h=A-f=1 m
Load on crane leg 1	L1=1200 kN
Load on crane leg 2	L2=50 kN
Load on crane leg 3	L3=-10 kN
Load on crane leg 4	L4=50 kN

DESIGN SUMMARY	**Load on pile 1 from crane**	**554.44 kN**
	Load on pile 2 from crane	**292.22 kN**
	Load on pile 3 from crane	**151.11 kN**
	Load on pile 4 from crane	**292.22 kN**

Location: Crane type 2

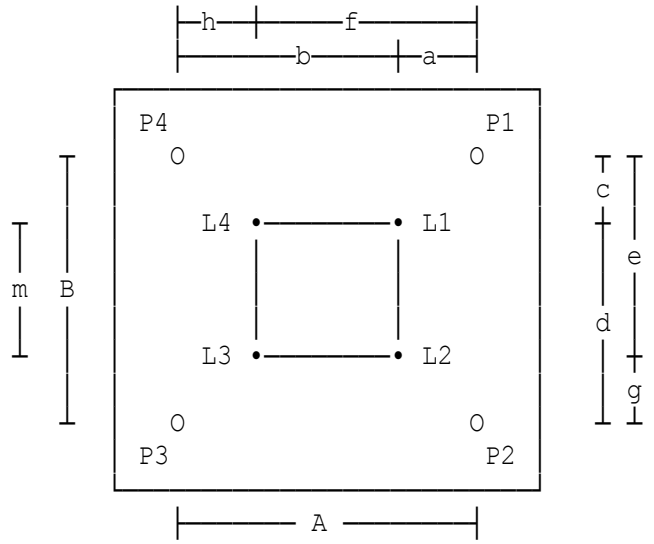

Reference to symbols

P1 = load on pile 1
P2 = load on pile 2
P3 = load on pile 3
P4 = load on pile 4

L1 = load on crane leg 1
L2 = load on crane leg 2
L3 = load on crane leg 3
L4 = load on crane leg 4

O = pile position

Dimension	a=0.9 m
Dimension	b=2.1 m
Dimension	c=0.9 m
Dimension	d=2.1 m
Dimension	m=1.2 m
Dimension	A=a+b=3 m
Dimension	B=c+d=3 m
Dimension	e=c+m=2.1 m
Dimension	f=a+m=2.1 m
Dimension	g=B-e=0.9 m
Dimension	h=A-f=0.9 m
Load on crane leg 1	L1=600 kN
Load on crane leg 2	L2=600 kN
Load on crane leg 3	L3=-50 kN
Load on crane leg 4	L4=-50 kN

DESIGN SUMMARY	**Load on pile 1 from crane**	**405 kN**
	Load on pile 2 from crane	**405 kN**
	Load on pile 3 from crane	**145 kN**
	Load on pile 4 from crane	**145 kN**

Copyright 1986-2024 Fitzroy Systems Ltd.

Location: Pile group analysis

A simple elastic analysis of a vertical load on a group of piles can be determined from the formula:

Pn = W/N + or - (AYn) + or - (BXn) where
A = W(ExIy -EyIxy) / (IxIy - Ixy^2) and
B = W(EyIx -ExIxy) / (IxIy - Ixy^2)
W is the resultant vertical load on the pile group
N is the number of piles in the group
Xn and Yn are the co-ordinates of the individual piles relative to the centroidal XX and YY axes

Number of piles N=5

Pile No	X Co-Ord(m)	Y Co-Ord (m)
1	0.5	0.5
2	2.5	0.5
3	0.5	2.5
4	2.5	2.5
5	1.5	1.5

Number of loads NL=1

Position	Weight(kN)	X Co-Ord(m)	Y Co-Ord (m)
1	1000	1.5	1.5

Sum of X Co ordinates SX=7.5
Sum of Y Co ordinates SY=7.5
Pile centroid X Co ord XB=SX/N=1.5
Pile centroid Y Co ord YB=SY/N=1.5

Co-ordinates of piles relative to XX and YY axes

Pile No	X Co-Ordinate (m)	Y Co-Ordinate (m)
1	-1	-1
2	1	-1
3	-1	1
4	1	1
5	0	0

2nd Moment of area of Pile Grp Ix=4 m^4
Iy=4 m^4
Product of Area moments about centroidal axes XY=0

Forces in piles are as follows:

Pile No	Force (kN)
1	200
2	200
3	200
4	200
5	200

Location: Example from Reinforced Concrete Designers Handbook

Loads on group of vertical piles

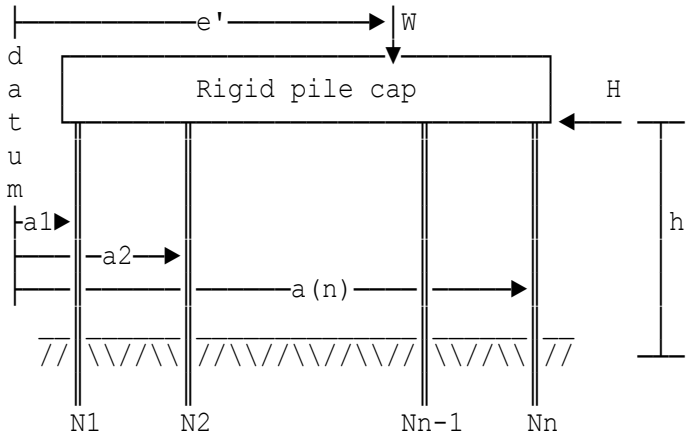

Notation is taken from Reinforced Concrete Designer's Handbook by Chas Reynolds 1957 edtn. h is depth to full fixity, thus pile bends in double curvature due to load H.

N is No. of piles in row.

Number of rows of piles	n=4
Vertical load on group	W=800 kN
Distance of line of W from datum	e'=5.25 m
Horizontal load on group	H=100 kN
Height from cap to full fixity	h=4.8 m
Weight of pile	wp=0 kN
Number of piles in row 1	N(1)=1
Distance of row from datum	a(1)=0 m
Number of piles in row 2	N(2)=1
Distance of row from datum	a(2)=3 m
Number of piles in row 3	N(3)=1
Distance of row from datum	a(3)=6 m
Number of piles in row 4	N(4)=1
Distance of row from datum	a(4)=9 m
Moment on pile group	M=W*e-H*h/2=360 kNm
Shearing force on any pile	S=H/sigN=25 kN
Bending moment on any pile	B=0.5*S*h=60 kNm

Location: Ex. in Fig 39c Reinforced Concrete Designers Handbook 1957

Loads on group of piles raking in the loading plane

Notation is taken from Reinforced Concrete Designer's Handbook by Chas Reynolds 1957 edtn.

```
├──────────────────e──────────────────▶│W
├──────────────xo──────────────────▶│
      ┌─┐          - -+- - - -o - -+- -+ -+- -      theta is angle of
◀──H  │ │            /     elastic/    /     \       pile with vertical
   │  │ │yo        /       centre     /        \     (shown positive
   │f │ │         /   Rigid pile cap  /           \   for P1 and -ve for
o──┘  └─┘         ═══════════════════════════════════    Pn in figure).
origin       / |          /|       /|               |\      W & H are
├───────x1──────▶|        /  |      / |               |  \    positive in
         /theta1      /theta2    /theta(n-1)      -theta(n)   direction
├──────/──────────x2─/──────▶|    /                          \     shown.
├─────/────────────/────────────/──────────xn──────────▶|        \
   P1           P2          Pn-1    Pn=pile reference & load   Pn
   A1           A2          An-1    An=cross-sectional area    An
   L1           L2          Ln-1    Ln=length of pile          Ln
```

Number of rows of piles	n=4
Vertical load on group	W=80 kN
Distance of line of W from origin	e=11.83 m
Horizontal load on group	H=10 kN
Distance of line of H from origin	f=0 m
Cross-sectional area of pile 1	A(1)=1 m²
Length of pile 1	L(1)=40 m
Self weight of pile 1	sw(1)=0 kN
Distance of pile from datum	x(1)=0 m
Angle of pile with vertical	th(1)=11.31°
Cross-sectional area of pile 2	A(2)=1 m²
Length of pile 2	L(2)=40 m
Self weight of pile 2	sw(2)=0 kN
Distance of pile from datum	x(2)=0 m
Angle of pile with vertical	th(2)=-11.31°
Cross-sectional area of pile 3	A(3)=1 m²
Length of pile 3	L(3)=40 m
Self weight of pile 3	sw(3)=0 kN
Distance of pile from datum	x(3)=18.667 m
Angle of pile with vertical	th(3)=11.31°
Cross-sectional area of pile 4	A(4)=1 m²
Length of pile 4	L(4)=40 m
Self weight of pile 4	sw(4)=0 kN
Distance of pile from datum	x(4)=18.667 m
Angle of pile with vertical	th(4)=-11.31°

Moment about elastic centre	M=W*(e-x0)+(y0-f)*H=199.72 kNm
Axial load on pile 1	Px=27.688 kN
Axial load on pile 2	Px=2.1931 kN
Axial load on pile 3	Px=38.599 kN
Axial load on pile 4	Px=13.104 kN

Copyright 1986-2024 Fitzroy Systems Ltd.

PILE TYPES AND CHARACTERISTICS

CONTENTS

Pile type ref.			
1	BORED PILE	NON DISPLACEMENT	Small diameter rotary bored
2		CAST IN PLACE	Large diameter rotary bored
3			Small diameter continuous flight augered
4			Large diameter continuous flight augered
5			Small diameter percussive bored
6			Large diameter percussive bored
7			Excavated barrettes
8	DRIVEN PILES	SMALL DISPLACEMENT	Hollow steel section
9		PREFORMED	Solid steel section
10			Hollow cylinder concrete
11	DRIVEN PILES	LARGE DISPLACEMENT	Franki type
12		CAST IN PLACE	Vibroform
13			Closed ended steel section
14			West shell type
15	DRIVEN PILES	LARGE DISPLACEMENT	Closed ended hollow steel section
16		PREFORMED	Precast concrete
17	MINI PILES	(less than 300mm,	Rotary bored
18		300mm diameter)	Percussive bored
19			Continuous flight augered
20			Jacked preformed
21			Driven steel cased

Pile type 1

Type SMALL DIAMETER, CAST IN PLACE, ROTARY BORED
Sizes Diameters - 300,400,450,500 & 600mm (12",16",18",20" & 24").
Length - Up to 40.0 metres (130ft).
Rake - Up to 14 deg (1 to 4 to vertical).
Piles can be installed approximately 1.0 metre (3ft) from centre of pile to face of existing structure.
Loads 300kN (67kips) to 1800kN (405kips) for the above diameters.
Mater Concrete 20 to 40 N/mm² (3000psi to 6000psi)
-ial Reinforced to full depth if necessary.
Noise Noise and vibration are minimal unless casing vibrators are used

Pile type 2

Type LARGE DIAMETER, CAST IN PLACE, ROTARY BORED
Sizes Diameters - 600 to 2400mm (2ft to 8ft)with underreamed bases to 3 times pile diameter.
Length - Up to 60m (200ft) on larger diameters.
Rake - Up to 14 degrees (1 in 4 to vertical).
Piles can be formed 300mm (1ft) from edge to existing struct.
Loads Up to 30000kN (6750kips) with underreamed bases
Mater Concrete 20 to 40 N/mm² (3000psi to 6000psi)
-ial Reinforcement to full depth if necessary.
Noise Noise and vibration are minimal

Pile type 3

Type SMALL DIAMETER, CONTINUOUS FLIGHT AUGERED
Sizes Diameters - 300,400,450,500 & 600mm (12",16",18",20" & 24").
Length - Up to 28m (92ft), 30m (98ft) with extension augers.
Rake - Up to 10 degrees (1 in 6 to vertical).
Pile can be installed approximately 1m (3ft) from centre of pile to existing structure.
Loads 300kN (67kips) to 1500kN (337kips) for the above diameters.
Mater Concrete or cement grout injected through the central auger stem
-ial A mixed in place pile maybe formed in suitable granular material
Reinforcement up to lengths of 12m (40ft) is installed after the pile is concreted (a maximum of 18m (60ft) with a vibrator).
Noise Low noise and vibration disturbance.

Pile type 4

Type LARGE DIAMETER, CONTINUOUS FLIGHT AUGERED
Sizes Diameters - 600,750 & 900mm (24",30" & 36").
Length - Up to 30m (98ft), 20m (66ft) for largest diameter.
Rake - Up to 10 degrees (1 in 6 to vertical).
Piles can be installed approximately 1m (3ft) from the centre of pile to face of existing structure.
Loads 1500kN (340kips) to 4000kN (900kips) for the above diameters.
Mater Concrete pumped through central auger stem.
-ial Reinforcement up to 12m (40ft) in length. Longer lengths up to 18m (60ft) can be installed with vibrators. Problems with the installation of heavily reinforced cages may occur.
Noise Low noise and vibration disturbance.

Pile type 5

Type SMALL DIAMETER, CAST IN PLACE, PERCUSSIVE BORED
Sizes Diameters - 300,450,500 & 600mm (12",18",20" & 24").
Length - Up to 35m (115ft).
Rake - Generally up to 14 degrees.
Piles can be constructed approximately 600mm from centre of pile to existing structure.
Loads Approximately 300 to 1500kN (67 to 338kips) for above diameters.
Mater Concrete 20 to 40 N/mm² (3000psi to 6000psi)
-ial Reinforcement to full depth if necessary.
Noise Noise and vibration can be maintained at acceptable levels.

Pile type 6

Type LARGE DIAMETER, CAST IN PLACE, PERCUSSIVE BORED
Sizes Diameters - 880,970,1080 & 1180mm (35",38",42" & 46").
Lengths - Up to 40m (130ft).
Rake - Up to 11 degrees (1 in 5 to vertical).
Piles can be installed approximately 1.5m (5ft) from centre of pile to face of existing structure.
Loads Up to 6500kN (1460kips)
Mater Concrete 20 to 40 N/mm² (3000psi to 6000psi)
-ial Reinforcement to full depth if necessary.
Noise Low noise and vibration disturbance.

Pile type 7

Type EXCAVATED, CAST IN PLACE, BARRETTES
Sizes Generally rectangular or "T" shaped panels.
Size varies but grab sizes vary from 1200 to 2500mm (48" to 98")
Width of grab 600 to 1500mm (24" to 60").
Length - Up to 50m (164ft) have been built.
Rake - Not possible. However they are capable of resisting substantial horizontal loadings.
Loads Typically 5000 to 10,000kN (1125kips to 2250kips)
Mater -ial Concrete 30 to 40 N/mm² (4500 to 6000psi) Tremmie mix required.
Reinforcement to full depth if required.
Noise Noise and vibration associated with heavy plant.

Pile type 8

Type DRIVEN HOLLOW STEEL SECTION
Sizes 275 to 2020mm (11" to 80") in diameter or square sections formed from welded sheet piles.
Length - Up to 100m (328ft) (welded sections).
Rake - Up to 30 degrees (1 in 2 to vertical).
Loads Up to 17000kN (3820kips)
Mater -ial Steel, either spiral weld, longitudinal weld or seamless circular sections, or box sections formed from welded sheet piles.
Noise High noise levels due to driving. Vibrations are high especially when penetrating dense strata.

Pile type 9

Type DRIVEN SOLID STEEL SECTION
Sizes 205x205x45kg (8"x8") to 355x405x340kg (14"x14") "H" sections.
Length - Any length (welded sections).
Rake - Up to 30 degrees (1 in 2 to vertical).
Loads 440 to 4410kN (100 to 990kips) depending on section size and grade of steel.
Mater -ial Steel from grade 43A (mild steel) to grade 508 (high yield)
Sections either universal bearing piles or universal columns.
Noise High noise and vibration levels.

Pile type 10

Type DRIVEN HOLLOW CYLINDER CONCRETE
Sizes Diameter - 915 to 1370mm (36" to 54") with 100 to 125mm (4" to 5") wall thickness.
Length - Up to 60m (197ft) (cannot be lengthened).
Rake - 7 to 11 degrees depending on length. However raking is generally not require.
Loads Design loads typically exceed 2000kN (450kips)
Mater -ial Post tensioned precast concrete cylindrical units. The number of tensioned steel tendons used for each pile size varies from between 8 to 16 for the smaller sizes to 24 for the larger sizes
Noise High noise and vibration levels.

Pile type 11

Type FRANKI DRIVEN CAST IN PLACE
Sizes Diameters - 280 to 600mm (11" to 24") (enlarged bases possible).
Lengths - Up to 21m (69ft).
Rakes - up to 14 degrees (1 in 4 to vertical).
Loads From 350 to 1200kN (80 to 270ft) for the above range of diams.
Mater -ial Cast in place concrete (zero slump or high slump).
Full length reinforcement if required.
Noise High noise and vibration levels. Not recommended close to existing structures. Pre-boring can be used to reduce vibration levels.

Pile type 12

Type VIBROFORM DRIVEN CAST IN PLACE
Sizes Diameters - 355 to 715mm (14" to 28").
Lengths - Up to 45m (148ft) for the larger diameters.
Rake - Up to 30 degrees (1 in 2 to vertical).
Loads 500 to 3000kN (110 to 675kips) for the above range of diameters.
Mater -ial Cast in-situ high slump concrete
Reinforcement to full depth if necessary.
Noise High noise and vibration levels. Not recommended for piling close to existing structures.

Pile type 13

Type DRIVEN CLOSED ENDED STEEL SECTION
Sizes Diameters - 255 to 610mm (10" to 24") with 9.5 to 19 mm (0.375" to 0.75") wall thickness for constant section.
210 to 440mm (8" to 17") for step tapered section.
Length - Up to 35m (115ft) for constant section, 75m (246ft) for stepped tapered section.
Rake Up to 30 degrees (1 in 2 to vertical).
Loads 200 to 1500kN (45 to 337kips)
Mater -ial Permanent steel shell filled with concrete.
Corregated steel tube is used in the stepped tapered pile.
Reinforcement is generally necessary except where the pile is subjected to tension forces or where pile projects above soil.
Noise High noise and vibration levels.

Pile type 14

Type DRIVEN WEST SHELL PILE
Sizes Diameter - 280 to 535mm (11 to 21") with 115 to 155mm (4.5" to 6") wall thickness.
Length - Generally up to 30m (98ft).
Rake - Up to 18 degrees (1 in 3 to vertical).
Loads 300 to 1200kN (67 to 270kips) for above range of diameters.
Mater -ial Circular precast shell sections 915mm (36") long, sealed and joined by crimped steel bands. Hollow central core concrete filled after driving completed.
Reinforcement to full depth if necessary.
Noise High noise and vibration levels.

Pile type 15

Type DRIVEN CLOSED ENDED HOLLOW STEEL SECTION
Sizes Diameters - 275 to 2030mm (11" to 80").
Length - Lengths up to 100m (328ft) are possible.
Rake - up to 30 degrees (1 in 2 to vertical).
Loads Up to 5000kN (1125kips)
Mater -ial Closed ended steel tubular section. Sections can be easily lengthened by welding.
Noise High noise and vibration levels. Large ground displacements are associated with the larger diameters.

Pile type 16

Type DRIVEN PRECAST CONCRETE
Sizes Typically 270 to 400mm (11" to 16") square sections.
Length - Up to lengths of 100m (328ft) in jointed sections.
Sections range from 5 to 15m (16 to 49ft) in length.
Rake - up to 18 degrees (1 in 3 to vertical).
Loads 500 to 2000kN (112 to 450kips) for above range of sizes.
Mater Concrete with minimum cube strength of 50N/mm² (7250psi).
-ial Reinforcement provided by 4 to 12 number 12 to 16mm (0.5 to 0.625") high tensile bars. Pile tension capacity governed by strength of joint.
Piles are cast in a purpose built yard and delivered to site.
Noise High noise and vibration levels.

Pile type 17

Type MINI PILE, CAST IN PLACE, ROTARY BORED
Sizes Diameters - Typically 75,100,135,170,220 & 280mm (3 to 11").
Length - Typically up to 30m (98ft).
Rake - Up to a rake of 1 in 4 to vertical.
Loads 50 to 500kN (11 to 110kips) for above range of diameters.
Mater In general a high cement content grout although concrete
-ial maybe used in the larger diameters where short lengths of temporary casing are used. Piles can be reinforced with a single bar in the case of the smaller diameters or by reinforcing cages or steel tubes in the larger sizes.
Noise Very low noise and vibration levels.

Pile type 18

Type MINI PILE, CAST IN PLACE, PERCUSSIVE BORED
Sizes Diameters - 150 to 450mm (6" to 18").
Length - Generally 15m (49ft) for underpinning work, 30m (98ft) maximum.
Rake - Not normally raked.
Pile can be constructed adjacent to or in existing structures.
Loads Up to approximately 500kN (112kips).
Mater Cast in place concrete or grout in the smaller diameters.
-ial Reinforcement to full depth if required. A single bar is used in the smaller diameters.
Noise Very low noise and vibration disturbance.

Pile type 19

Type MINI PILE, CONTINUOUS FLIGHT AUGERED
Sizes Diameters - 150,195,250 & 300mm (6",7.5",10" & 12").
Length - Lengths of 30m (98ft) can be achieved.
Rake - Up to 14 degrees (1 in 4 to vertical).
Piles can be installed adjacent to within existing structures
Loads 100 to 500kN (22 to 112kips) for the above range of diameters.
Mater Concrete or grout injected through the hollow auger stem.
-ial Reinforcement consisting of either single bar, cage or steel tube in stalled after auger is removed.
Noise Very low noise and vibration levels.

Pile type 20

Type MINI PILE, DRIVEN OR JACKETED PREFORMED
Sizes Diameter - 50 to 300mm (2" to 12").
Length - Can be installed up to lengths of 30m (98ft).
Rake - Normally installed vertical.
Piles can be installed adjacent to, within or under existing structures. This type of pile is generally associated with the underpinning of small structures.
Loads Up to maximum loads of 600kN (135kips)
Mater Preformed precast concrete, steel pipes or solid rail section.
-ial
Noise Very low noise and vibration levels.

Pile type 21

Type MINI PILE, CAST IN PLACE STEEL CASED
Sizes Diameters - 65 to 300mm (2.5" to 12").
Length - up to 30m (98ft).
Rake - Generally installed vertical.
Piles can be installed adjacent to or within existing structures
Loads 50 to 350kN (11kips to 79kips) for the above range of diameters
Mater Steel casing fitted with flat bottomed end for driving. Casing
-ial concrete filled. Starter bars maybe required.
Noise Low noise and vibration disturbance.

Location: Sheet retaining wall to South of new building

Single tied wall

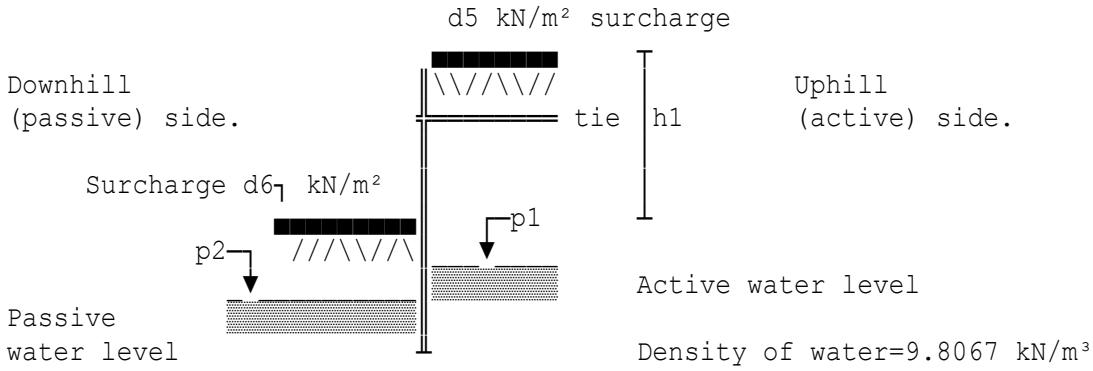

Retained height h1=5.5 m

Free-earth support method: It assumes the wall is embedded a sufficient distance into the soil to prevent translation, but is able to rotate at toe providing the wall with a pinned support. With this method the factor of safety against rotation will be taken as 1. Once the pile embedment depth required for equilibrium is found this will be multiplied by a factor of safety on embedment (Fd) to obtain the design embedment depth.

Safety factor on embedment	Fd=1.2
Inclination of active ground	b=0°
Active water level	p1=30.5 m
Passive water level	p2=28 m
Increment of calculation	d1=0.1 m
Number of horizontal line loads	d3=0
Minimum fluid pressure	d4=4.7 kN/m³
Active vertical surcharge	d5=10 kN/m²
Passive vertical surcharge	d6=0 kN/m²
Number of soil strata	N=4

• Soil data for stratum 1 of 4

Top level	TL(1)=35 m
Bulk density	Gam(1)=18 kN/m³
Angle of internal friction	Phi(1)=25°
Cohesion	C'(1)=0 kN/m²
Angle of active wall friction	Da(1)=16.7°
Angle of passive wall friction	Dp(1)=3°
Wall adhesion	Cw(1)=0 kN/m²

• Soil data for stratum 2 of 4

Top level	TL(2)=31 m
Bulk density	Gam(2)=20 kN/m³
Angle of internal friction	Phi(2)=6°
Cohesion	C'(2)=0 kN/m²
Angle of active wall friction	Da(2)=4°
Angle of passive wall friction	Dp(2)=3°
Wall adhesion	Cw(2)=0 kN/m²

• Soil data for stratum 3 of 4

Top level	TL(3)=25.5 m
Bulk density	Gam(3)=20 kN/m³
Angle of internal friction	Phi(3)=24°
Cohesion	C'(3)=0 kN/m²
Angle of active wall friction	Da(3)=16°
Angle of passive wall friction	Dp(3)=3°
Wall adhesion	Cw(3)=0 kN/m²

• Soil data for stratum 4 of 4

Top level	TL(4)=24 m
Bulk density	Gam(4)=20 kN/m³
Angle of internal friction	Phi(4)=40°
Cohesion	C'(4)=0 kN/m²
Angle of active wall friction	Da(4)=26.7°
Angle of passive wall friction	Dp(4)=3°
Wall adhesion	Cw(4)=0 kN/m²

Tie level TiL=32.5 m

Earth pressure coefficients for both sides

Stratum	Ka	Kp	Kac	Kpc
(Passive coefficients from Muller-Breslau equations)				
1	0.34555	2.6737	1.1757	3.2703
2	0.76793	1.3006	1.7526	2.2809
3	0.3605	2.5688	1.2008	3.2055
4	0.17855	5.1536	0.8451	4.5403

Summary

Level (m)	Pressure (kN/m²)	Shear (kN/m)	Moment (kNm/m)
35	3.4555	0	0
34.9	4.0775	0.37665	0.018314
34.8	4.6995	0.8155	0.077403
34.7	5.3215	1.3165	0.18349
34.6	5.9435	1.8798	0.34279
34.5	6.5654	2.5052	0.56152
34.4	7.1874	3.1929	0.84591
34.3	7.8094	3.9427	1.2022
34.2	8.4314	4.7548	1.6365
34.1	9.0534	5.629	2.1552
34	9.6754	6.5654	2.7644
33.9	10.297	7.5641	3.4704
33.8	10.919	8.6249	4.2793
33.7	11.541	9.748	5.1974
33.6	12.163	10.933	6.2309
33.5	12.785	12.181	7.3861
33.4	13.407	13.49	8.6691
33.3	14.029	14.862	10.086
33.2	14.651	16.296	11.644
33.1	15.273	17.792	13.348
33	15.895	19.351	15.204
32.9	16.517	20.971	17.22
32.8	17.139	22.654	19.401
32.7	17.761	24.399	21.753

32.6	18.383	26.206	24.282
32.5	19.005	28.076	26.996
32.4	19.627	-232.65	3.6342
32.3	20.249	-230.65	-19.531
32.2	20.871	-228.6	-42.495
32.1	21.493	-226.48	-65.249
32	22.115	-224.3	-87.788
31.9	22.737	-222.06	-110.11
31.8	23.359	-219.75	-132.2
31.7	23.981	-217.38	-154.05
31.6	24.603	-214.96	-175.67
31.5	25.225	-212.46	-197.04
31.4	25.847	-209.91	-218.16
31.3	26.469	-207.29	-239.02
31.2	27.091	-204.62	-259.62
31.1	27.713	-201.88	-279.95
31	28.335	-199.07	-299.99
30.9	64.506	-194.43	-319.7
30.8	66.042	-187.9	-338.82
30.7	67.578	-181.22	-357.27
30.6	69.114	-174.39	-375.06
30.5	70.649	-167.4	-392.15
30.4	72.413	-160.25	-408.53
30.3	74.176	-152.92	-424.19
30.2	75.94	-145.41	-439.11
30.1	77.703	-137.73	-453.27
30	79.467	-129.87	-466.65
29.9	81.23	-121.84	-479.24
29.8	82.993	-113.63	-491.01
29.7	84.757	-105.24	-501.96
29.6	86.52	-96.675	-512.05
29.5	88.284	-87.934	-521.28
29.4	87.446	-79.148	-529.64
29.3	86.608	-70.445	-537.12
29.2	85.77	-61.826	-543.73
29.1	84.932	-53.291	-549.48
29	84.095	-44.84	-554.39
28.9	83.257	-36.472	-558.46
28.8	82.419	-28.188	-561.69
28.7	81.581	-19.988	-564.1
28.6	80.743	-11.872	-565.69
28.5	79.905	-3.8398	-566.47
28.4	79.068	4.1089	-566.46
28.3	78.23	11.974	-565.65
28.2	77.392	19.755	-564.07
28.1	76.554	27.452	-561.71
28	75.716	35.066	-558.58
27.9	75.173	42.61	-554.7
27.8	74.63	50.1	-550.06
27.7	74.087	57.536	-544.68
27.6	73.544	64.918	-538.55
27.5	73.001	72.245	-531.7
27.4	72.458	79.518	-524.11
27.3	71.915	86.737	-515.79
27.2	71.372	93.901	-506.76
27.1	70.829	101.01	-497.02
27	70.286	108.07	-486.56

26.9	69.743	115.07	-475.4
26.8	69.2	122.02	-463.55
26.7	68.657	128.91	-451
26.6	68.114	135.75	-437.77
26.5	67.571	142.53	-423.86
26.4	67.028	149.26	-409.27
26.3	66.485	155.94	-394
26.2	65.942	162.56	-378.08
26.1	65.399	169.12	-361.5
26	64.856	175.64	-344.26
25.9	64.313	182.1	-326.37
25.8	63.77	188.5	-307.84
25.7	63.227	194.85	-288.67
25.6	62.684	201.15	-268.87
25.5	62.141	207.39	-248.44
25.4	-68.719	207.06	-227.61
25.3	-70.97	200.07	-207.25
25.2	-73.221	192.86	-187.61
25.1	-75.472	185.43	-168.69
25	-77.722	177.77	-150.53
24.9	-79.973	169.88	-133.14
24.8	-82.224	161.77	-116.56
24.7	-84.475	153.44	-100.79
24.6	-86.726	144.88	-85.877
24.5	-88.977	136.09	-71.826
24.4	-91.228	127.08	-58.666
24.3	-93.479	117.85	-46.417
24.2	-95.73	108.39	-35.103
24.1	-97.981	98.703	-24.747
24	-100.23	88.792	-15.37
23.9	-317.03	67.929	-7.3534
23.8	-322.1	35.972	-2.1541
23.7	-327.18	3.5083	-0.17586

Unfactored force in tie at level 32.5	262.66 kN/m
Factored force in tie at level 32.5	525.31 kN/m
(factor is 2.0 - see CIRIA Report 104)	
Founding level for unity F.O.S.	23.689 m
Founding level for required F.O.S.	22.3 m
Overall length of sheet retaining wall	12.7 m
Unfactored BM for section design	566.47 kNm/m
Factored BM for section design	849.71 kNm/m
(factor is 1.5 - see CIRIA Report 104)	

Location: Anchored sheet-pile wall Example 8.14 Basic Soil Mechanics

Single tied wall

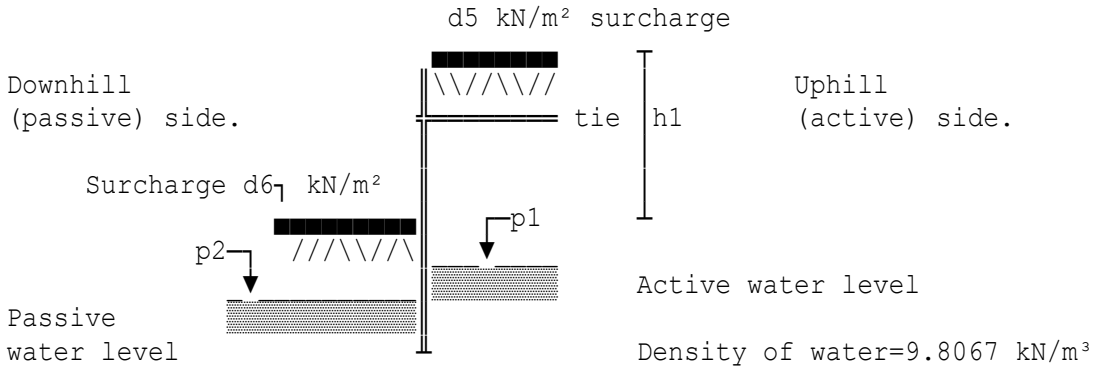

Retained height h1=9 m

Free-earth support method: It assumes the wall is embedded a sufficient distance into the soil to prevent translation, but is able to rotate at toe providing the wall with a pinned support. With this method the factor of safety against rotation will be taken as 1. Once the pile embedment depth required for equilibrium is found this will be multiplied by a factor of safety on embedment (Fd) to obtain the design embedment depth.

Safety factor on embedment	Fd=1.2
Inclination of active ground	b=0°
Active water level	p1=0 m
Passive water level	p2=0 m
Increment of calculation	d1=0.1 m
Number of horizontal line loads	d3=0
Minimum fluid pressure	d4=0 kN/m³
Active vertical surcharge	d5=0 kN/m²
Passive vertical surcharge	d6=0 kN/m²
Number of soil strata	N=1

• Soil data for stratum 1 of 1

Top level	TL(1)=100 m
Bulk density	Gam(1)=20 kN/m³
Angle of internal friction	Phi(1)=28°
Cohesion	C'(1)=0 kN/m²
Angle of active wall friction	Da(1)=18.67°
Angle of passive wall friction	Dp(1)=14°
Wall adhesion	Cw(1)=0 kN/m²
K factors for stratum	Ka(1)=0.30438
	Kac(1)=1.1034
	Kp(1)=4.292
	Kpc(1)=4.0972
Tie level	TiL=98.5 m

Earth pressure coefficients for both sides

Stratum	Ka	Kp	Kac	Kpc
(K factors specified directly)				
1	0.30438	4.292	1.1034	4.0972

Summary

Level (m)	Pressure (kN/m²)	Shear (kN/m)	Moment (kNm/m)
100	0	0	0
99.9	0.60876	0.030438	0.0010146
99.8	1.2175	0.12175	0.0081168
99.7	1.8263	0.27394	0.027394
99.6	2.435	0.48701	0.064934
99.5	3.0438	0.76095	0.12683
99.4	3.6526	1.0958	0.21915
99.3	4.2613	1.4915	0.34801
99.2	4.8701	1.948	0.51948
99.1	5.4788	2.4655	0.73964
99	6.0876	3.0438	1.0146
98.9	6.6964	3.683	1.3504
98.8	7.3051	4.3831	1.7532
98.7	7.9139	5.144	2.2291
98.6	8.5226	5.9658	2.7841
98.5	9.1314	6.8486	3.4243
98.4	9.7402	-124.17	-9.0408
98.3	10.349	-123.17	-21.408
98.2	10.958	-122.1	-33.673
98.1	11.566	-120.98	-45.827
98	12.175	-119.79	-57.866
97.9	12.784	-118.54	-69.783
97.8	13.393	-117.23	-81.572
97.7	14.001	-115.86	-93.228
97.6	14.61	-114.43	-104.74
97.5	15.219	-112.94	-116.11
97.4	15.828	-111.39	-127.33
97.3	16.437	-109.78	-138.39
97.2	17.045	-108.1	-149.28
97.1	17.654	-106.37	-160.01
97	18.263	-104.57	-170.55
96.9	18.872	-102.71	-180.92
96.8	19.48	-100.8	-191.1
96.7	20.089	-98.819	-201.08
96.6	20.698	-96.779	-210.86
96.5	21.307	-94.679	-220.43
96.4	21.915	-92.518	-229.79
96.3	22.524	-90.296	-238.93
96.2	23.133	-88.013	-247.85
96.1	23.742	-85.669	-256.53
96	24.35	-83.265	-264.98
95.9	24.959	-80.799	-273.18
95.8	25.568	-78.273	-281.14
95.7	26.177	-75.686	-288.84
95.6	26.785	-73.038	-296.27
95.5	27.394	-70.329	-303.44
95.4	28.003	-67.559	-310.34

95.3	28.612	-64.728	-316.95
95.2	29.22	-61.836	-323.28
95.1	29.829	-58.884	-329.32
95	30.438	-55.871	-335.05
94.9	31.047	-52.796	-340.49
94.8	31.656	-49.661	-345.61
94.7	32.264	-46.465	-350.42
94.6	32.873	-43.208	-354.9
94.5	33.482	-39.891	-359.06
94.4	34.091	-36.512	-362.88
94.3	34.699	-33.072	-366.36
94.2	35.308	-29.572	-369.49
94.1	35.917	-26.011	-372.27
94	36.526	-22.389	-374.69
93.9	37.134	-18.706	-376.75
93.8	37.743	-14.962	-378.43
93.7	38.352	-11.157	-379.74
93.6	38.961	-7.2915	-380.66
93.5	39.569	-3.365	-381.19
93.4	40.178	0.62238	-381.33
93.3	40.787	4.6706	-381.07
93.2	41.396	8.7798	-380.39
93.1	42.004	12.95	-379.31
93	42.613	17.181	-377.8
92.9	43.222	21.472	-375.87
92.8	43.831	25.825	-373.51
92.7	44.439	30.239	-370.7
92.6	45.048	34.713	-367.46
92.5	45.657	39.248	-363.76
92.4	46.266	43.844	-359.6
92.3	46.875	48.501	-354.99
92.2	47.483	53.219	-349.9
92.1	48.092	57.998	-344.34
92	48.701	62.838	-338.3
91.9	49.31	67.738	-331.77
91.8	49.918	72.7	-324.75
91.7	50.527	77.722	-317.23
91.6	51.136	82.805	-309.2
91.5	51.745	87.949	-300.67
91.4	52.353	93.154	-291.61
91.3	52.962	98.42	-282.03
91.2	53.571	103.75	-271.93
91.1	54.18	109.13	-261.28
91	54.788	114.58	-250.1
90.9	46.813	119.66	-238.38
90.8	38.838	123.94	-226.19
90.7	30.863	127.43	-213.62
90.6	22.887	130.12	-200.73
90.5	14.912	132.01	-187.62
90.4	6.937	133.1	-174.36
90.3	-1.0383	133.39	-161.03
90.2	-9.0135	132.89	-147.71
90.1	-16.989	131.59	-134.47
90	-24.964	129.49	-121.41
89.9	-32.939	126.6	-108.6
89.8	-40.914	122.91	-96.121
89.7	-48.89	118.42	-84.048

89.6	-56.865	113.13	-72.464
89.5	-64.84	107.04	-61.449
89.4	-72.815	100.16	-51.082
89.3	-80.791	92.48	-41.443
89.2	-88.766	84.002	-32.612
89.1	-96.741	74.727	-24.669
89	-104.72	64.654	-17.693
88.9	-112.69	53.784	-11.765
88.8	-120.67	42.116	-6.9633
88.7	-128.64	29.65	-3.3683
88.6	-136.62	16.387	-1.0598
88.5	-144.59	2.327	-0.11739

Unfactored force in tie at level 98.5	131.97 kN/m
Factored force in tie at level 98.5	263.93 kN/m
(factor is 2.0 - see CIRIA Report 104)	
Founding level for unity F.O.S.	88.484 m
Founding level for required F.O.S.	87.76 m
Overall length of sheet retaining wall	12.24 m
Unfactored BM for section design	381.33 kNm/m
Factored BM for section design	572 kNm/m
(factor is 1.5 - see CIRIA Report 104)	

Location: Cantilever sheet-pile wall Ex 8.13 Basic Soil Mechanics

Cantilever wall

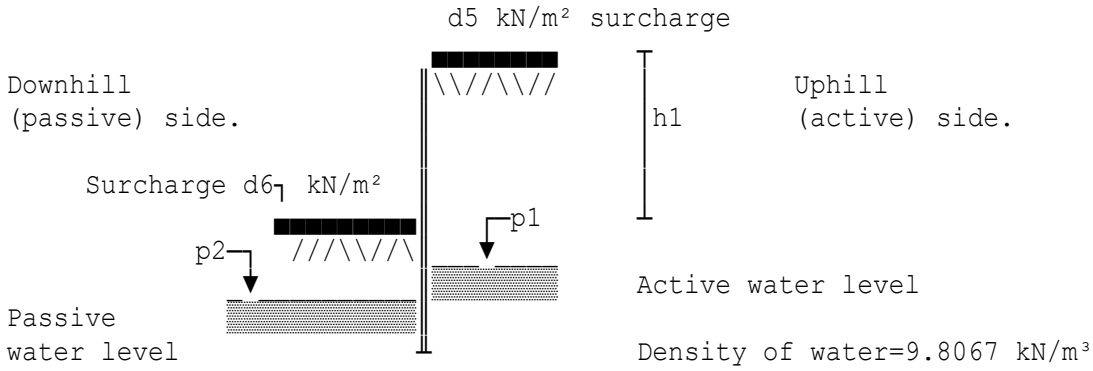

Retained height h1=3 m

Free-earth support method: It assumes the wall is embedded a sufficient distance into the soil to prevent translation, but is able to rotate at toe providing the wall with a pinned support. With this method the factor of safety against rotation will be taken as 1. Once the pile embedment depth required for equilibrium is found this will be multiplied by a factor of safety on embedment (Fd) to obtain the design embedment depth.

Safety factor on embedment	Fd=1.2
Inclination of active ground	b=0°
Active water level	p1=0 m
Passive water level	p2=0 m
Increment of calculation	d1=0.1 m
Number of horizontal line loads	d3=0
Minimum fluid pressure	d4=0 kN/m³
Active vertical surcharge	d5=0 kN/m²
Passive vertical surcharge	d6=0 kN/m²
Number of soil strata	N=1

• Soil data for stratum 1 of 1

Top level	TL(1)=100 m
Bulk density	Gam(1)=20 kN/m³
Angle of internal friction	Phi(1)=30°
Cohesion	C'(1)=0 kN/m²
Angle of active wall friction	Da(1)=0°
Angle of passive wall friction	Dp(1)=0°
Wall adhesion	Cw(1)=0 kN/m²
K factors for stratum	Ka(1)=0.448
	Kac(1)=1.338
	Kp(1)=2.232
	Kpc(1)=2.9879

Earth pressure coefficients for both sides

Stratum	Ka	Kp	Kac	Kpc
(K factors specified directly)				
1	0.448	2.232	1.338	2.9879

Summary

Level (m)	Pressure (kN/m²)	Shear (kN/m)	Moment (kNm/m)	Stability Shear(kN/m)	Stability Mom(kNm/m)
100	0	0	0		
99.9	0.896	0.0448	0.0014933		
99.8	1.792	0.1792	0.011947		
99.7	2.688	0.4032	0.04032		
99.6	3.584	0.7168	0.095573		
99.5	4.48	1.12	0.18667		
99.4	5.376	1.6128	0.32256		
99.3	6.272	2.1952	0.51221		
99.2	7.168	2.8672	0.76459		
99.1	8.064	3.6288	1.0886		
99	8.96	4.48	1.4933		
98.9	9.856	5.4208	1.9876		
98.8	10.752	6.4512	2.5805		
98.7	11.648	7.5712	3.2809		
98.6	12.544	8.7808	4.0977		
98.5	13.44	10.08	5.04		
98.4	14.336	11.469	6.1167		
98.3	15.232	12.947	7.3367		
98.2	16.128	14.515	8.7091		
98.1	17.024	16.173	10.243		
98	17.92	17.92	11.947		
97.9	18.816	19.757	13.83		
97.8	19.712	21.683	15.901		
97.7	20.608	23.699	18.169		
97.6	21.504	25.805	20.644		
97.5	22.4	28	23.333		
97.4	23.296	30.285	26.247		
97.3	24.192	32.659	29.393		
97.2	25.088	35.123	32.782		
97.1	25.984	37.677	36.421		
97	26.88	40.32	40.32		
96.9	23.312	42.83	44.48	42.83	44.48
96.8	19.744	44.982	48.874	44.982	48.874
96.7	16.176	46.778	53.465	46.778	53.465
96.6	12.608	48.218	58.218	48.218	58.218
96.5	9.04	49.3	63.097	49.3	63.097
96.4	5.472	50.026	68.066	50.026	68.066
96.3	1.904	50.394	73.09	50.394	73.09
96.2	-1.664	50.406	78.133	50.406	78.133
96.1	-5.232	50.062	83.159	50.062	83.159
96	-8.8	49.36	88.133	49.36	88.133
95.9	-12.368	48.302	93.019	48.302	93.019
95.8	-15.936	46.886	97.782	46.886	97.782
95.7	-19.504	45.114	102.38	45.114	102.38
95.6	-23.072	42.986	106.79	42.986	106.79
95.5	-26.64	40.5	110.97	40.5	110.97
95.4	-30.208	37.658	114.88	37.658	114.88

95.3	-33.776	34.458	118.49	34.458	118.49
95.2	-37.344	30.902	121.76	30.902	121.76
95.1	-40.912	26.99	124.66	26.99	124.66
95	-44.48	22.72	127.15	22.72	127.15
94.9	-48.048	18.094	129.19	18.094	129.19
94.8	-51.616	13.11	130.75	13.11	130.75
94.7	-55.184	7.7704	131.8	7.7704	131.8
94.6	-58.752	2.0736	132.3	2.0736	132.3
94.5	-62.32	-3.98	132.2	-3.98	132.2
94.4	-65.888	-10.39	131.49	-10.39	131.49
94.3	-69.456	-17.158	130.11	-17.158	130.11
94.2	-73.024	-24.282	128.04	-24.282	128.04
94.1	-76.592	-31.762	125.25	-31.762	125.25
94	-80.16	-39.6	121.68	-39.6	121.68
93.9	-83.728	-47.794	117.31	-47.794	117.31
93.8	-87.296	-56.346	112.11	-56.346	112.11
93.7	-90.864	-65.254	106.03	-65.254	106.03
93.6	-94.432	-74.518	99.047	-74.518	99.047
93.5	-98	-84.14	91.117	-84.14	91.117
93.4	-101.57	-94.118	82.207	-94.118	82.207
93.3	-105.14	-104.45	72.281	-104.45	72.281
93.2	-108.7	-115.15	61.304	-115.15	61.304
93.1	-112.27	-126.19	49.24	-126.19	49.24
93	-115.84	-137.6	36.053	-137.6	36.053
92.9	-119.41	-149.36	21.708	-149.36	21.708
92.8	-122.98	-161.48	6.169	-161.48	6.169

Founding level for rotational stability	92.7 m
Resultant shear difference at this level	173.96 kN/m
Passive pressure available on active side	287.34 kN/m²
Additional length required for toe shear	0.6054 m
Founding level required	91.12 m
Overall length of sheet retaining wall	8.88 m
Unfactored BM for section design	132.3 kNm/m
Factored BM for section design	198.44 kNm/m
(factor is 1.5 - see CIRIA Report 104)	
Unfactored BM for stability	132.3 kNm/m
Factored stability BM for section design	132.3 kNm/m
(factor is 1.0 - see CIRIA Report 104)	

NOTE: The overall length of the sheet retaining wall is the actual length required and includes the additional length required for toe shear.

Location: Tied Sheet retaining wall

Single tied wall

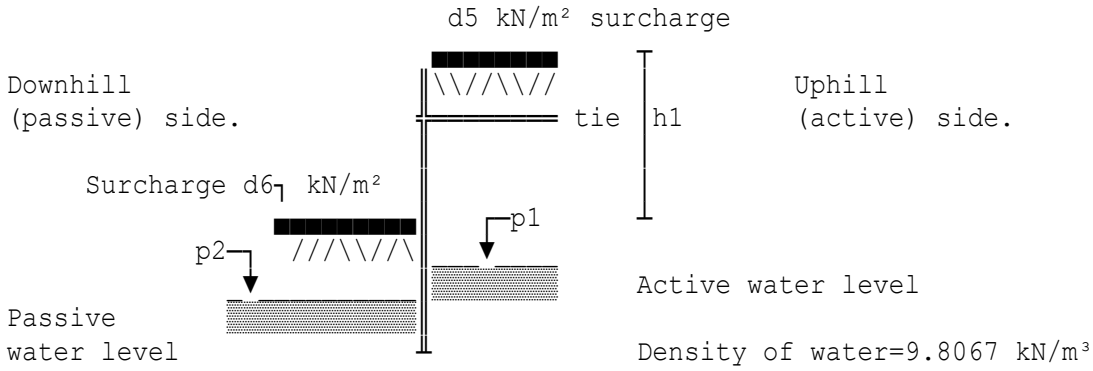

Retained height h1=2.2 m

Free-earth support method: It assumes the wall is embedded a sufficient distance into the soil to prevent translation, but is able to rotate at toe providing the wall with a pinned support. With this method the factor of safety against rotation will be taken as 1. Once the pile embedment depth required for equilibrium is found this will be multiplied by a factor of safety on embedment (Fd) to obtain the design embedment depth.

Safety factor on embedment	Fd=1.2
Inclination of active ground	b=25°
Active water level	p1=100.5 m
Passive water level	p2=99.7 m
Increment of calculation	d1=0.1 m
Number of horizontal line loads	d3=0
Minimum fluid pressure	d4=4.7 kN/m³
Active vertical surcharge	d5=0 kN/m²
Passive vertical surcharge	d6=0 kN/m²
Number of soil strata	N=1

• Soil data for stratum 1 of 1

Top level	TL(1)=102.2 m
Bulk density	Gam(1)=19.25 kN/m³
Angle of internal friction	Phi(1)=30°
Cohesion	C'(1)=0 kN/m²
Angle of active wall friction	Da(1)=15°
Angle of passive wall friction	Dp(1)=0°
Wall adhesion	Cw(1)=0 kN/m²
Tie level	TiL=101.7 m

Earth pressure coefficients for both sides

Stratum	Ka	Kp	Kac	Kpc
(Passive coefficients from Muller-Breslau equations)				
1	0.46844	3	1.3689	3.4641

Summary

Level (m)	Pressure (kN/m²)	Shear (kN/m)	Moment (kNm/m)
102.2	0	0	0
102.1	0.90175	0.045088	0.0015029
102	1.8035	0.18035	0.012023
101.9	2.7053	0.40579	0.040579
101.8	3.607	0.7214	0.096187
101.7	4.5088	1.1272	0.18786
101.6	5.4105	-16.059	-1.4436
101.5	6.3123	-15.473	-3.021
101.4	7.214	-14.797	-4.5352
101.3	8.1158	-14.03	-5.9773
101.2	9.0175	-13.174	-7.3383
101.1	9.9193	-12.227	-8.609
101	10.821	-11.19	-9.7806
100.9	11.723	-10.063	-10.844
100.8	12.625	-8.8452	-11.79
100.7	13.526	-7.5377	-12.61
100.6	14.428	-6.1399	-13.295
100.5	15.33	-4.6521	-13.835
100.4	16.753	-3.0479	-14.221
100.3	18.176	-1.3015	-14.44
100.2	19.599	0.58724	-14.477
100.1	21.022	2.6183	-14.318
100	22.445	4.7916	-13.948
99.9	18.093	6.8185	-13.364
99.8	13.741	8.4102	-12.599
99.7	9.389	9.5667	-11.697
99.6	6.9984	10.386	-10.697
99.5	4.6077	10.966	-9.6274
99.4	2.2171	11.308	-8.5117
99.3	-0.17353	11.41	-7.3739
99.2	-2.5642	11.273	-6.2377
99.1	-4.9548	10.897	-5.1272
99	-7.3454	10.282	-4.0663
98.9	-9.7361	9.4279	-3.0788
98.8	-12.127	8.3347	-2.1887
98.7	-14.517	7.0025	-1.4198
98.6	-16.908	5.4313	-0.79616
98.5	-19.299	3.6209	-0.34156
98.4	-21.689	1.5715	-0.079945

Unfactored force in tie at level 101.7	17.682 kN/m
Factored force in tie at level 101.7	35.365 kN/m
(factor is 2.0 - see CIRIA Report 104)	
Founding level for unity F.O.S.	98.331 m
Founding level for required F.O.S.	97.84 m
Overall length of sheet retaining wall	4.36 m

Unfactored BM for section design	14.477 kNm/m
Factored BM for section design	21.715 kNm/m
(factor is 1.5 - see CIRIA Report 104)	

Copyright 1986-2024 Fitzroy Systems Ltd.

Location: Cantilever sheet-pile wall

Cantilever wall

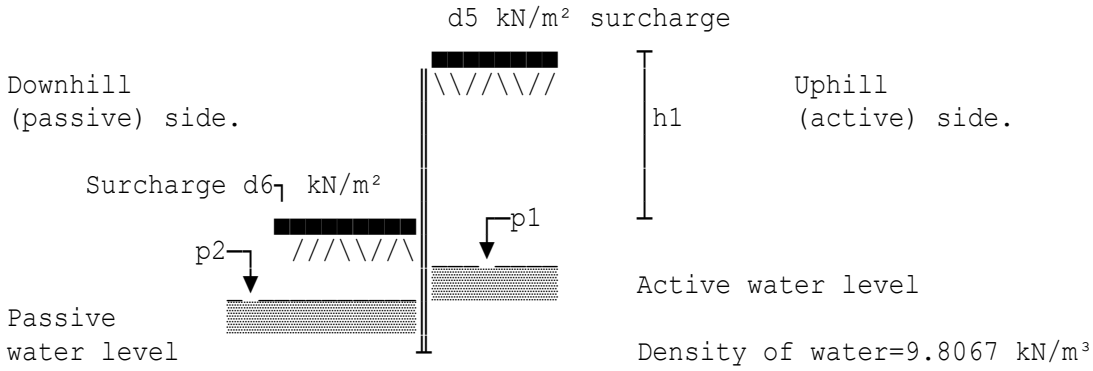

Retained height h1=3 m
Free-earth support method: It assumes the wall is embedded a sufficient distance into the soil to prevent translation, but is able to rotate at toe providing the wall with a pinned support. The factor of safety against rotation will be taken as 2. With this method the calculations are carried out to a greater depth until the rotational factor of safety is achieved.

Factor of safety against rotation	w=2
Inclination of active ground	b=0°
Active water level	p1=0 m
Passive water level	p2=0 m
Increment of calculation	d1=0.1 m
Number of horizontal line loads	d3=0
Minimum fluid pressure	d4=0 kN/m³
Active vertical surcharge	d5=0 kN/m²
Passive vertical surcharge	d6=0 kN/m²
Number of soil strata	N=1

• Soil data for stratum 1 of 1

Top level	TL(1)=100 m
Bulk density	Gam(1)=20 kN/m³
Angle of internal friction	Phi(1)=30°
Cohesion	C'(1)=0 kN/m²
Angle of active wall friction	Da(1)=0°
Angle of passive wall friction	Dp(1)=0°
Wall adhesion	Cw(1)=0 kN/m²

Earth pressure coefficients for both sides

Stratum	Ka	Kp	Kac	Kpc
(Passive coefficients from Muller-Breslau equations)				
1	0.33333	3	1.1547	3.4641

Summary

Level (m)	Pressure (kN/m²)	Shear (kN/m)	Moment (kNm/m)	Stability Shear(kN/m)	Stability Mom(kNm/m)
100	0	0	0		
99.9	0.66667	0.033333	0.0011111		
99.8	1.3333	0.13333	0.0088889		
99.7	2	0.3	0.03		
99.6	2.6667	0.53333	0.071111		
99.5	3.3333	0.83333	0.13889		
99.4	4	1.2	0.24		
99.3	4.6667	1.6333	0.38111		
99.2	5.3333	2.1333	0.56889		
99.1	6	2.7	0.81		
99	6.6667	3.3333	1.1111		
98.9	7.3333	4.0333	1.4789		
98.8	8	4.8	1.92		
98.7	8.6667	5.6333	2.4411		
98.6	9.3333	6.5333	3.0489		
98.5	10	7.5	3.75		
98.4	10.667	8.5333	4.5511		
98.3	11.333	9.6333	5.4589		
98.2	12	10.8	6.48		
98.1	12.667	12.033	7.6211		
98	13.333	13.333	8.8889		
97.9	14	14.7	10.29		
97.8	14.667	16.133	11.831		
97.7	15.333	17.633	13.519		
97.6	16	19.2	15.36		
97.5	16.667	20.833	17.361		
97.4	17.333	22.533	19.529		
97.3	18	24.3	21.87		
97.2	18.667	26.133	24.391		
97.1	19.333	28.033	27.099		
97	20	30	30		
96.9	14.667	31.733	33.091	31.883	33.096
96.8	9.3333	32.933	36.329	33.533	36.369
96.7	4	33.6	39.66	34.95	39.795
96.6	-1.3333	33.733	43.031	36.133	43.351
96.5	-6.6667	33.333	46.389	37.083	47.014
96.4	-12	32.4	49.68	37.8	50.76
96.3	-17.333	30.933	52.851	38.283	54.566
96.2	-22.667	28.933	55.849	38.533	58.409
96.1	-28	26.4	58.62	38.55	62.265
96	-33.333	23.333	61.111	38.333	66.111
95.9	-38.667	19.733	63.269	37.883	69.924
95.8	-44	15.6	65.04	37.2	73.68
95.7	-49.333	10.933	66.371	36.283	77.356
95.6	-54.667	5.7333	67.209	35.133	80.929
95.5	-60	-42.633E-15 bm(i)		33.75	84.375

95.4	-65.333	-6.2667	67.191	32.133	87.671
95.3	-70.667	-13.067	66.229	30.283	90.794
95.2	-76	-20.4	64.56	28.2	93.72
95.1	-81.333	-28.267	62.131	25.883	96.426
95	-86.667	-36.667	58.889	23.333	98.889
94.9	-92	-45.6	54.78	20.55	101.08
94.8	-97.333	-55.067	49.751	17.533	102.99
94.7	-102.67	-65.067	43.749	14.283	104.58
94.6	-108	-75.6	36.72	10.8	105.84
94.5	-113.33	-86.667	28.611	7.0833	106.74
94.4	-118.67	-98.267	19.369	3.1333	107.25
94.3	-124	-110.4	8.94	-1.05	107.36
94.2	-129.33			-5.4667	107.03
94.1	-134.67			-10.117	106.25
94	-140			-15	105
93.9	-145.33			-20.117	103.25
93.8	-150.67			-25.467	100.97
93.7	-156			-31.05	98.145
93.6	-161.33			-36.867	94.751
93.5	-166.67			-42.917	90.764
93.4	-172			-49.2	86.16
93.3	-177.33			-55.717	80.916
93.2	-182.67			-62.467	75.009
93.1	-188			-69.45	68.415
93	-193.33			-76.667	61.111
92.9	-198.67			-84.117	53.074
92.8	-204			-91.8	44.28
92.7	-209.33			-99.717	34.706
92.6	-214.67			-107.87	24.329
92.5	-220			-116.25	13.125
92.4	-225.33			-124.87	1.0711

Founding level for rotational stability	92.3 m
Resultant shear difference at this level	133.72 kN/m
Passive pressure available on active side	215.33 kN/m²
Additional length required for toe shear	0.62098 m
Founding level required	91.7 m
Overall length of sheet retaining wall	8.3 m
Unfactored BM for section design	67.5 kNm/m
Factored BM for section design	101.25 kNm/m
(factor is 1.5 - see CIRIA Report 104)	
Unfactored BM for stability	107.36 kNm/m
Factored stability BM for section design	107.36 kNm/m
(factor is 1.0 - see CIRIA Report 104)	

NOTE: The overall length of the sheet retaining wall is the actual length required and includes the additional length required for toe shear.

Location: Laterally loaded pile analysed by Brom's method

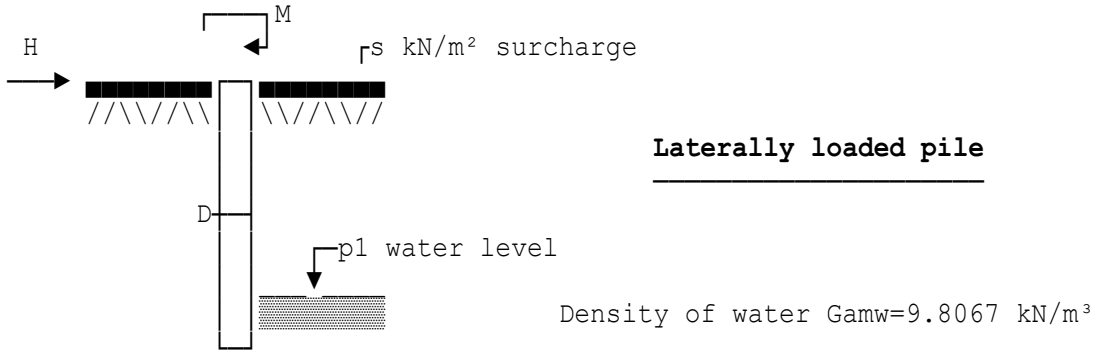

Water level (-ve values) p1=-3 m

Increment of calculation d1=0.05 m
F.O.S applied to lateral pressure fos=3
Number of soil strata N=6

• Soil data for stratum 1 of 6
Top level of stratum TL(1)=0 m
Bulk density Gam(1)=18 kN/m³
Angle of internal friction Phi(1)=25°
Cohesive shear strength Cu(1)=0 kN/m²

• Soil data for stratum 2 of 6
Top level of stratum TL(2)=-2 m
Bulk density Gam(2)=20 kN/m³
Angle of internal friction Phi(2)=33°
Cohesive shear strength Cu(2)=0 kN/m²

• Soil data for stratum 3 of 6
Top level of stratum TL(3)=-3 m
Bulk density Gam(3)=20 kN/m³
Angle of internal friction Phi(3)=33°
Cohesive shear strength Cu(3)=0 kN/m²

• Soil data for stratum 4 of 6
Top level of stratum TL(4)=-6 m
Bulk density Gam(4)=20 kN/m³
Angle of internal friction Phi(4)=36°
Cohesive shear strength Cu(4)=0 kN/m²

• Soil data for stratum 5 of 6
Top level of stratum TL(5)=-10 m
Bulk density Gam(5)=22 kN/m³
Angle of internal friction Phi(5)=40°
Cohesive shear strength Cu(5)=0 kN/m²

• Soil data for stratum 6 of 6

Top level of stratum	TL(6)=-20 m
Bulk density	Gam(6)=22 kN/m³
Angle of internal friction	Phi(6)=40°
Cohesive shear strength	Cu(6)=0 kN/m²
Unfactored vertical surcharge	s=18 kN/m²
Unfactored lateral load at top	H=50 kN
Unfactored moment applied to top	M=10 kNm
Pile dia. resisting lateral load	D=0.9 m

Summary

Level of max moment (m)	Level of bottom of cage (m)	Unfactored max moment (kNm)
-0.9	-2.1	33.985

Level (m)	Pressure (kN/m²)	Shear (kN)	Moment (kNm)
0	44.35	50	10
-0.05	46.568	47.954	12.449
-0.1	48.785	45.809	14.794
-0.15	51.003	43.564	17.028
-0.2	53.221	41.219	19.148
-0.25	55.438	38.774	21.149
-0.3	57.656	36.229	23.024
-0.35	59.873	33.585	24.77
-0.4	62.091	30.841	26.381
-0.45	64.308	27.997	27.852
-0.5	66.526	25.053	29.179
-0.55	68.743	22.009	30.356
-0.6	70.961	18.866	31.378
-0.65	73.178	15.623	32.241
-0.7	75.396	12.28	32.939
-0.75	77.613	8.8373	33.467
-0.8	79.831	5.2948	33.821
-0.85	82.048	1.6525	33.995
-0.9	84.266	0	33.985
-0.95	86.483	-3.8419	33.889
-1	88.701	-7.7835	33.599
-1.05	90.918	-11.825	33.109
-1.1	93.136	-15.966	32.415
-1.15	95.353	-20.207	31.511
-1.2	97.571	-24.548	30.392
-1.25	99.788	-28.989	29.054
-1.3	102.01	-33.529	27.492
-1.35	104.22	-38.169	25.7
-1.4	106.44	-42.909	23.673
-1.45	108.66	-47.749	21.407
-1.5	110.88	-52.688	18.897
-1.55	113.09	-57.728	16.137
-1.6	115.31	-52.589	13.378

-1.65	117.53	-47.35	10.879
-1.7	119.75	-42.011	8.6449
-1.75	121.96	-36.572	6.6799
-1.8	124.18	-31.034	4.9893
-1.85	126.4	-25.396	3.5782
-1.9	128.62	-19.658	2.4514
-1.95	130.83	-13.821	1.614
-2	133.05	-7.8833	1.071
-2.05	186.57	-0.69189	0.84657
-2.1	189.96	7.7799	1.0231

Location: Sheet piling w. anchor, cohesionless soil (Rowe reduction)

Design of sheet-pile wall

Drained soil density Gamma=15.9 kN/m³
Saturated soil density GSat=19.33 kN/m³
Angle of internal friction Phi=30°
Angle of surface friction (delta) Delta=20°

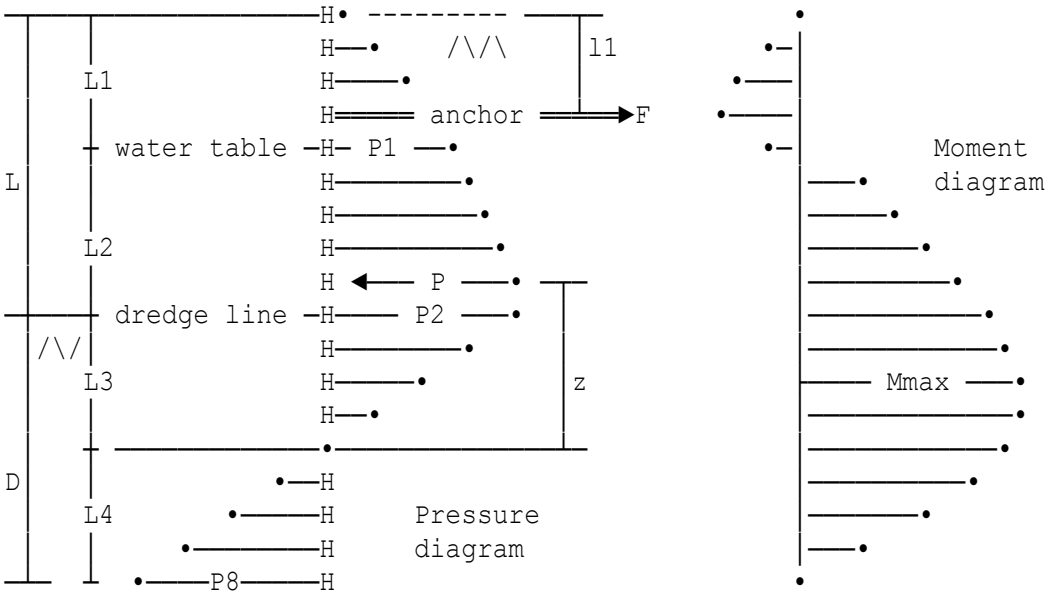

COHESIONLESS PASSIVE SOIL : GROUND ANCHOR PROVIDED

Height L1 above water-line L1=4 m
Height from dredge to water-line L2=6 m
Depth to ground anchor ADepth=2 m
Passive-resistance safety factor SF1=1.5
Limiting steel stress Sigma=172.5 N/mm²
Elastic modulus of steel ES=200000 N/mm²
Coulomb coefficients:
For active pressure: KAct=(CRP/(SQR(SRP*(SRP+CRP*TRD))
+1))^2=0.27938
For passive resistance (unfactored):
KPas=((CRP/(1-SQR(SPD*SRP/CRD))))^2
=5.7372
KPas=KPas/SF1=3.8248
Min.penetration length required Dm=L3+L4=3.3498 m
Actual penetration depth adopted D=3.5 m
Tensile force in anchor Force=P-((KPas-KAct)*GPrime)*L4^2/2
=113.63 kN/m
Maximum bending moment Mmax=306.6 kNm per metre

Rowe moment-reduction method

Adopted pile length Length=15 m

Most-economic solution with Larssen Section

From Fig 6.10 of Das, for loose sand with log.rho=-2.6924
Limiting value of Md/Mmax CRatio=0.52826
Larssen Section 2 B is satisfactory.
Larssen Section 3 B will also suffice (MRatio/CRatio=1.3919)
Larssen Section 4 B will also suffice (MRatio/CRatio=1.6639)
Larssen Section 6 will also suffice (MRatio/CRatio=2.2786)

Most-economic solution with Frodingham Section

From Fig 6.10 of Das, for loose sand with log.rho=-2.5226
Limiting value of Md/Mmax CRatio=0.46424
Frodingham Section 2 is satisfactory.
Frodingham Section 3 will also suffice (MRatio/CRatio=1.5)
Frodingham Section 4 will also suffice (MRatio/CRatio=1.8407)
Frodingham Section 5 will also suffice (MRatio/CRatio=2.1342)

Location: Sheet piling with anchor in cohesive soil

Design of sheet-pile wall

Drained soil density	Gamma=20 kN/m³
Saturated soil density	GSat=20 kN/m³
Angle of internal friction	Phi=5°
Angle of surface friction (delta)	Delta=12°

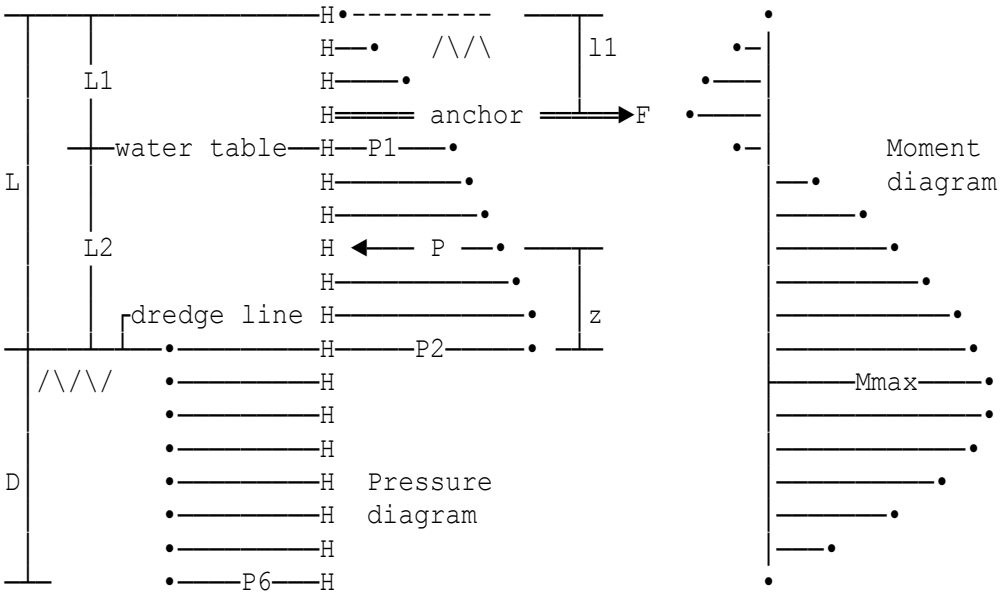

COHESIVE PASSIVE SOIL : GROUND ANCHOR PROVIDED

Height L1 above water-line	L1=4 m
Height from dredge to water-line	L2=6 m
Cohesion factor	Coh=40 kN/m²
Depth to ground anchor	ADepth=2 m
Passive-resistance safety factor	SF1=1.5
Coulomb coefficients:	
For active pressure:	KAct=(CRP/(SQR(SRP*(SRP+CRP*TRD)) +1))^2=0.73574
Min. penetration length required	MinP=10.586 m.
Actual penetration depth adopted	D=11 m
Tensile force in anchor	Force=P-P6*D=91.922 kN per metre
Maximum bending moment	Mmax=26.887 kNm per metre

Location: Sheet piling without anchor in cohesionless soil

Design of sheet-pile wall

Drained soil density Gamma=15.9 kN/m³
Saturated soil density GSat=19.33 kN/m³
Angle of internal friction Phi=30°
Angle of surface friction (delta) Delta=20°

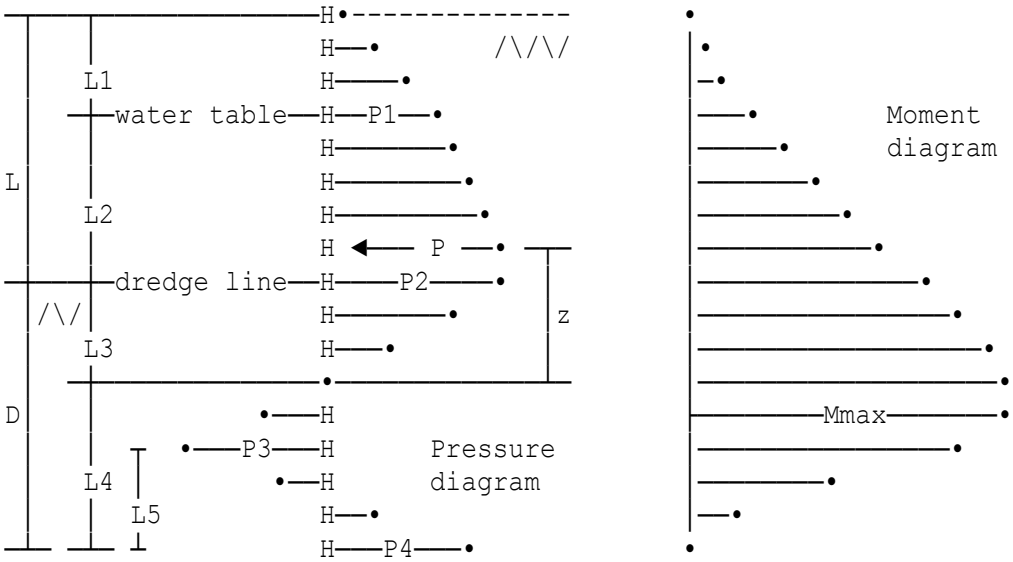

COHESIONLESS PASSIVE SOIL : NO GROUND ANCHOR PROVIDED

Height L1 above water-line L1=4 m
Height from dredge to water-line L2=6 m
Passive-resistance safety factor SF1=1.5
Coulomb coefficients:
For active pressure: KAct=(CRP/(SQR(SRP*(SRP+CRP*TRD))+1))^2=0.27938
For passive resistance (unfactored):
KPas=((CRP/(1-SQR(SPD*SRP/CRD))))^2=5.7372
KPas=KPas/SF1=3.8248
Min.penetration length required Dm=L3+L4=9.2288 m
Actual penetration depth adopted D=10 m

Location: Ex1 - Default example

Embedded depths of holding down bolts

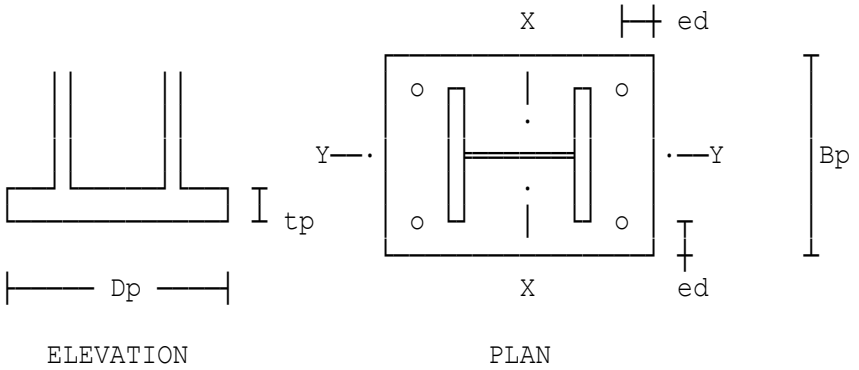

Using the method adopted in 'Steel Designer's Manual (5th Edition)' and based on the assumptions listed below:

- bolts are arranged symmetrically about major axis
- the failure mode of bolts pulled from a concrete foundation is based on a conical pull-out, such that the surface area is 4.44D^2, where D is the depth of embedment of the bolts
- holding down bolts should be anchored into the foundation by a washer (anchor) plate or other load distributing member embedded in the concrete
- bolts have been previously checked for combined shear and tension.

Factored design tensile force	Ft=44 kN
Length of baseplate	Dp=560 mm
Breadth of baseplate	Bp=200 mm
Edge distance to bolt centre line	ed=60 mm
Steel Grade	S 275
Bolt grade	4.6
Concrete strength	fcu=20 N/mm²

Holding down bolt details

Number of bolts to be used	n=4
Number of bolts in tension	nt=2
Bolt diameter	bd=20 mm
Embedded depth of bolts	D=100 mm

Half the bolts subject to tension.

SUMMARY OF	**Number of H.D. bolts**	**4**
HOLDING	**Diameter of bolts**	**20 mm**
DOWN BOLT	**Grade of bolts**	**4.6**
REQUIREMENTS	**Edge distance to bolt C.L.**	**60 mm**
	Embedded depth	**100 mm**

Location: Ex2 - Example in moment connections publication

Embedded depths of holding down bolts

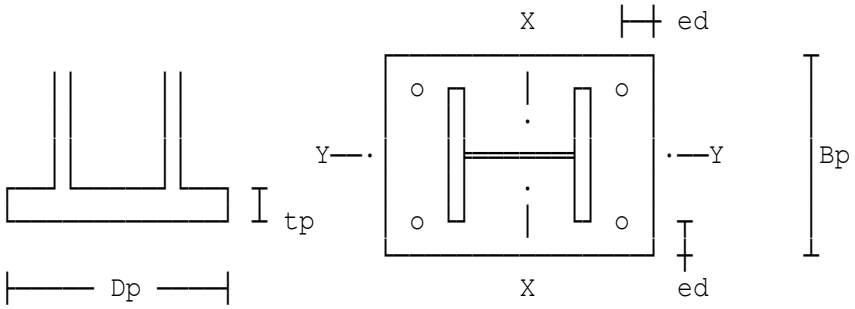

ELEVATION PLAN

Using the method adopted in 'Joints in Steel Construction - moment connections' and based on the assumptions listed below:

- Anchor plates are used
- The concrete base is checked for punching shear in accordance with BS8110.

Factored design tensile force	Ft=674.16 kN
Length of baseplate	Dp=600 mm
Breadth of baseplate	Bp=600 mm
Edge distance to bolt centre line	ed=75 mm
Steel Grade	S 275
Bolt grade	8.8
Concrete strength	fcu=30 N/mm²

Holding down bolt details

Number of bolts to be used	n=8
Number of bolts in tension	nt=4
Bolt diameter	bd=24 mm
Embedded depth of bolts	D=450 mm

Half the bolts subject to tension.

Anchor plates

Anchor plate size (8.8 bolts)	5d x 5d x 0.8d (approx)
Assumed cover to reinforcement	cv=50 mm
tension reinforcement	Asp=0.15 %

SUMMARY OF	**Number of H.D. bolts**	**8**
HOLDING	**Diameter of bolts**	**24 mm**
DOWN BOLT	**Grade of bolts**	**8.8**
REQUIREMENTS	**Edge distance to bolt C.L.**	**75 mm**
	Embedded depth	**450 mm**

Location: Ex3 - Example based on bond length

Embedded depths of holding down bolts

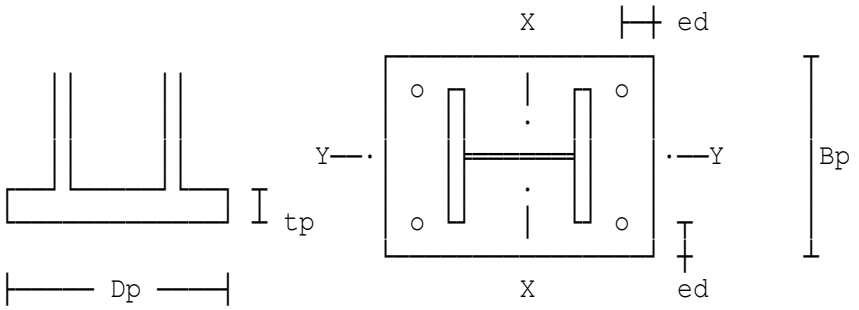

ELEVATION PLAN

Using the method adopted in 'Joints in Steel Construction - moment connections' and based on the assumptions listed below:

- The anchorage is developed by the bond along the embedded length of the holding bolt
- The bolt is regarded as a reinforcing bar and the requirements are based on BS8110 clauses 3.12.8.3 and 3.12.8.4.

Factored design tensile force Ft=120 kN

Length of baseplate Dp=600 mm
Breadth of baseplate Bp=600 mm
Edge distance to bolt centre line ed=75 mm

Steel Grade S 275
Bolt grade 4.6
Concrete strength fcu=30 N/mm²

Holding down bolt details

Number of bolts to be used n=4
Number of bolts in tension nt=4
Bolt diameter bd=24 mm
Embedded depth of bolts D=450 mm
All bolts subject to tension.

Anchorage

Assumed cover to reinforcement cv=50 mm
Since Ft' ≤ Pt (30 kN ≤ 141.2 kN), tensile load per bolt is allowable.

SUMMARY OF	**Number of H.D. bolts**	**4**
HOLDING	**Diameter of bolts**	**24 mm**
DOWN BOLT	**Grade of bolts**	**4.6**
REQUIREMENTS	**Edge distance to bolt C.L.**	**75 mm**
	Embedded depth	**450 mm**

Location: Ex4 - Four bolts intersecting cones

Embedded depths of holding down bolts

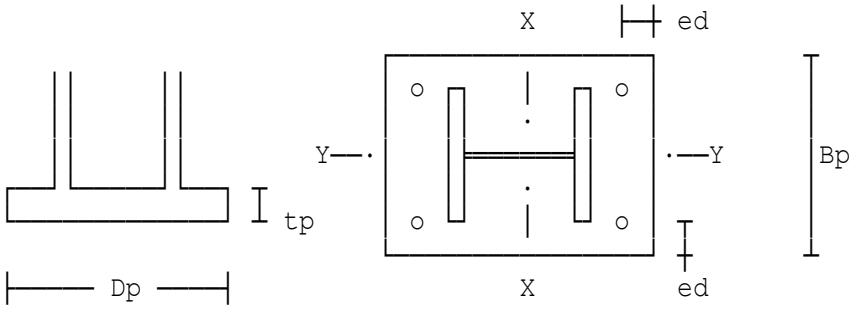

ELEVATION PLAN

Using the method adopted in 'Steel Designer's Manual (5th Edition)' and based on the assumptions listed below:

- bolts are arranged symmetrically about major axis
- the failure mode of bolts pulled from a concrete foundation is based on a conical pull-out, such that the surface area is 4.44D^2, where D is the depth of embedment of the bolts
- holding down bolts should be anchored into the foundation by a washer (anchor) plate or other load distributing member embedded in the concrete
- bolts have been previously checked for combined shear and tension.

Factored design tensile force	Ft=315 kN
Length of baseplate	Dp=400 mm
Breadth of baseplate	Bp=400 mm
Edge distance to bolt centre line	ed=50 mm
Steel Grade	S 275
Bolt grade	4.6
Concrete strength	fcu=40 N/mm²

Holding down bolt details

Number of bolts to be used	n=4
Number of bolts in tension	nt=4
Bolt diameter	bd=20 mm
Embedded depth of bolts	D=200 mm

All bolts subject to tension.

SUMMARY OF	**Number of H.D. bolts**	**4**
HOLDING	**Diameter of bolts**	**20 mm**
DOWN BOLT	**Grade of bolts**	**4.6**
REQUIREMENTS	**Edge distance to bolt C.L.**	**50 mm**
	Embedded depth	**200 mm**

Location: Ex1 - Example in moment connections publication

Embedded depths of holding down bolts

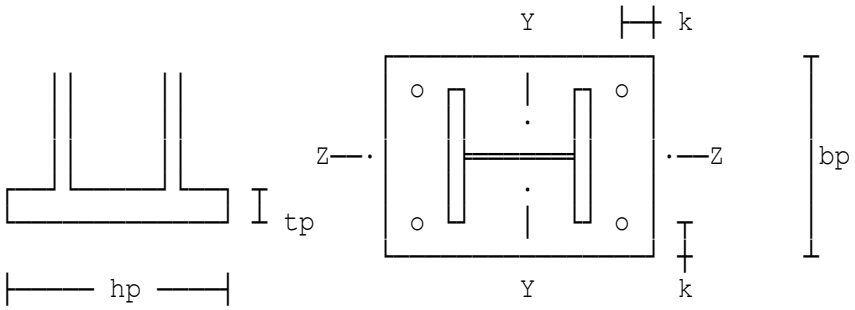

ELEVATION PLAN

Length of baseplate hp=600 mm
Breadth of baseplate bp=600 mm
Edge distance to bolt centre line k=75 mm

Steel Grade S 275
The grade of anchor bolts is grade 8.8 (Table 3.1 EC3 Part 1-8).
Char cube compressive strength fcu=30 N/mm² (concrete)

Holding down bolt details

Number of bolts to be used n=8
Number of bolts in tension nt=4
Bolt diameter bd=24 mm
Half the bolts are subject to tension.
Overall embedded depth Lo=450 mm
Assumed cover to reinforcement cv=50 mm
Assumed percentage area of
tension reinforcement Asp=0.15 %
Punching shear force VEd=ABS(FtlEd)=674.16 kN
Shear stress at control perimeter vEd=beta*VEd*1000/(u1*dav)
=0.31363 N/mm²
Design punching shear resistance vRdc=(0.18/gamc)*k*(100*p1
*fck)^0.333=0.31812 N/mm²
Shear enhancement 2d/av senh=1
The min design punching shear resistance governs and will be adopted.
Design punching shear resistance vRdc=senh*0.035*k^1.5*fck^0.5
=0.39033 N/mm²
As vEd ≤ vRdc (0.31363 N/mm² ≤ 0.39033 N/mm²), the anchorage arrangement is considered suitable.
Tension per anchor bolt FtEd=ABS(FtlEd)/nt=168.54 kN
Tensile resistance per anchor FtRd=0.9*fub*As/(gamM2*10^3)=203.33 kN
As FtEd ≤ FtRd (168.54 kN ≤ 203.33 kN), tensile load per bolt is OK.

SUMMARY OF	**Number of H.D. bolts**	**8**
HOLDING	**Diameter of bolts**	**24 mm**
DOWN BOLT	**Grade of bolts**	**8.8**
REQUIREMENTS	**Edge distance to bolt C.L.**	**75 mm**
	Overall embedded depth	**450 mm**

Location: Ex2 - Example based on bond length

Embedded depths of holding down bolts

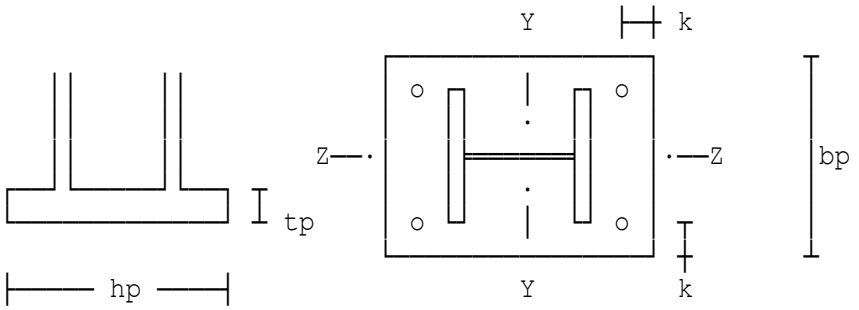

ELEVATION PLAN

Length of baseplate hp=600 mm
Breadth of baseplate bp=600 mm
Edge distance to bolt centre line k=75 mm

Steel Grade S 275
The grade of anchor bolts is grade 4.6 (Table 3.1 EC3 Part 1-8).
Char cube compressive strength fcu=30 N/mm² (concrete)

Holding down bolt details

Number of bolts to be used n=4
Number of bolts in tension nt=4
Bolt diameter bd=24 mm
All bolts are subject to tension.
Overall embedded depth Lo=450 mm
Assumed cover to reinforcement cv=50 mm
Tensile resistance per anchor FtRd=0.9*fub*As/(gamM2*10^3)=101.66 kN
As FtEd ≤ FtRd (30 kN ≤ 101.66 kN), tensile load per bolt is OK.

SUMMARY OF	**Number of H.D. bolts**	**4**
HOLDING	**Diameter of bolts**	**24 mm**
DOWN BOLT	**Grade of bolts**	**4.6**
REQUIREMENTS	**Edge distance to bolt C.L.**	**75 mm**
	Overall embedded depth	**450 mm**

Location: Default example

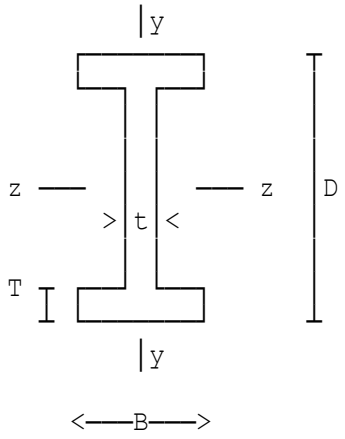

I section beam

Calculations in accordance with BS449:Part 2:1969.

Design moment about z-z axis	Mzz'=296.63 kNm
Design shear force	SF'=169.5 kN
Design axial load (+ve comp)	F'=0 kN
Length of member	L'=7 m
533 x 210 x 82 UB.	
Steel Grade	Grade=43
Effec length for buckling abt yy	lyy'=0 m
Effec length for buckling abt zz	lzz'=7 m

UNIVERSAL BEAM	**533 x 210 x 82 UB Grade 43**	
SECTION	**Section is satisfactory for axial,**	
SUMMARY	**bending, shear, and local capacity,**	
	and overall buckling checks.	
STRESSES	**Design bending**	**164.96 N/mm²**
SUMMARY	**Permissible bending**	**180 N/mm²**
	Design shear	**33.421 N/mm²**
	Permissible shear	**110 N/mm²**
	Bending & shear	**0.77159 < 1.25**

Location: Default example

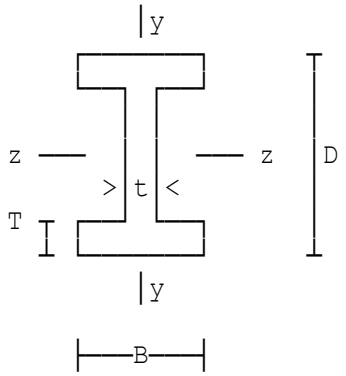

I section column

Calculations in accordance with BS449:Part 2:1969.

Design moment about z-z axis	Mzz'=445 kNm
Design shear force	SF'=0 kN
Design axial load (+ve comp)	F'=8250 kN
Length of member	L'=4.5 m
Design BM about minor axis yy	Myy'=18 kNm
356 x 406 x 467 UC.	
Steel Grade	Grade=50
Effective length about zz axis	lzz'=4.5 m
Effective length about yy axis	lyy'=4.5 m

UNIVERSAL COLUMN	**356 x 406 x 467 UC Grade 50**	
SECTION	**Section is satisfactory for axial,**	
SUMMARY	**bending, shear, and buckling checks**	
STRESSES	**Design compressive**	**138.66 N/mm²**
SUMMARY	**Permissible comp.**	**191.06 N/mm²**
	Design bending (z-z)	**53.084 N/mm²**
	Permissible bending	**230 N/mm²**
	Design bending (y-y)	**5.4717 N/mm²**
	Permissible bending	**230 N/mm²**
	Bending & axial	**0.98031 ≤ 1**

Location: Example 3, Design in SHS to BS449

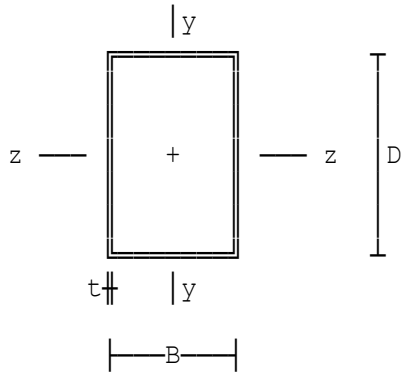

RHS beam section design

Calculations in accordance
with DESIGN IN SHS to BS449
published by BSC Tubes Division.

Maximum design BM about axis zz Mzz'=19.33 kNm
Maximum design SF in y direction V'=14.5 kN
Design load (comp. positive) F'=0 kN
Length of member L=4 m
200 x 100 x 5 RHS - Hot finished.
Properties (cm): A=28.7 rx=7.21 Zx=149 Sx=185 Ix=1500
J=1200 C=172 Zy=101 Sy=114 Iy=505 ry=4.19
Steel Grade (suffix C appended) Grade=43

Span of beam for deflection Ld=4000 mm
Load on beam W=29 kN
Modulus of elasticity E=210 kN/mm²
Deflection OK.

RECTANGULAR HOLLOW	**200 x 100 x 5 RHS Grade 43**	
SECTION	**Section is satisfactory for axial,**	
SUMMARY	**bending, shear, and buckling checks**	
STRESSES	**Design bending**	**129.73 N/mm²**
SUMMARY	**Permissible bending**	**180 N/mm²**
	Design shear	**7.25 N/mm²**
	Permissible shear	**110 N/mm²**
	Bending & shear	**0.40405 ≤ 1.25**
	Bending,shear,bearing	**139.96 N/mm²**
	Permissible	**250 N/mm²**
	Bending,shear,bearing	**0.48325 ≤ 1.25**

Location: Example 7, Design in SHS to BS449

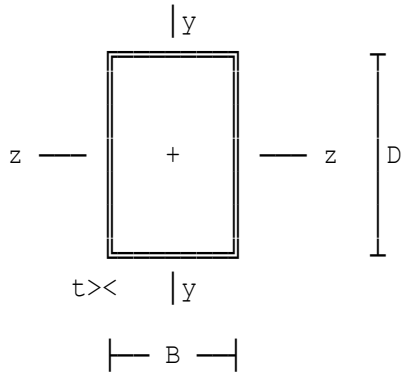

RHS Column

Calculations are in accordance with DESIGN IN SHS to BS449 published by BSC Tubes Division.

Maximum design BM about axis zz	Mzz'=3 kNm
Maximum design SF in y direction	V'=0 kN
Design load (comp. positive)	F'=50 kN
Length of member	L=4.5 m
Design BM about yy axis	Myy'=0 kNm

100 x 100 x 4 SHS - Hot finished.
Properties (cm): A=15.2 rx=3.91 Zx=46.4 Sx=54.4 Ix=232 J=361 C=68.2

Effective length about yy axis	lyy=4500 mm
Effective length about zz axis	lzz=4500 mm

SQUARE HOLLOW	**100 x 100 x 4 SHS Grade 43**	
SECTION	**Section is satisfactory for axial,**	
SUMMARY	**bending, shear, and buckling checks**	
STRESSES	**Design compressive**	**32.895 N/mm²**
SUMMARY	**Permissible comp.**	**66.419 N/mm²**
	Design bending z-z	**64.655 N/mm²**
	Permissible bending	**180 N/mm²**
	Bi-axial bending	
	& axial compression	**0.85445 ≤ 1**

Location: Example 4.3.1 in 'Manual on Connections'

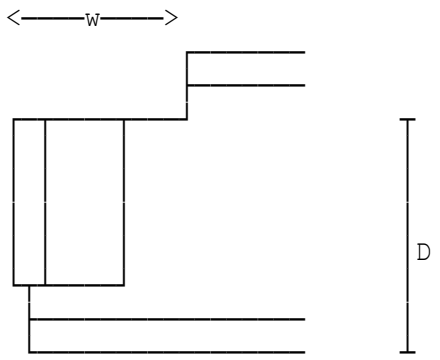

Bolt grade (4.6 or 8.8)	bgrade=8.8
Diamater of bolts	dia=20 mm
Centres of bolts	crs=70 mm
Grade of supported beam & cleats	grade=43
Web thickness of supported beam	t=14 mm
Grade of supporting member	sgrade=43
Total thick of supporting member	tt=15.2 mm
Available thick for this connect	ts=15.2 mm
Thickness of angle cleats	tcleat=10 mm
Length of angle cleat leg	lcleat=90 mm
Backmark	bmk=50 mm
Vertical shear on bolt group	V=550 kN
Number of bolts in cleat leg	n=9
End distance	end=35 mm
838 x 292 x 176 UB.	
Length of notch to cleat face	w=160 mm
Depth of notch	n'=65 mm

WEB CLEAT SUMMARY - BOLTS IN DOUBLE SHEAR

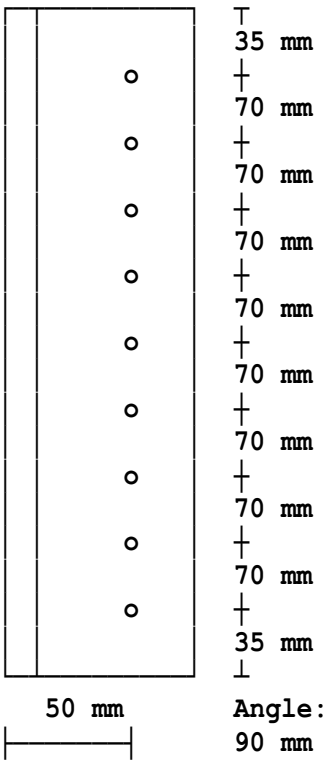

Angle:
90 mm x 90 mm x 10 mm

WEB CLEAT SUMMARY - BOLTS IN SINGLE SHEAR

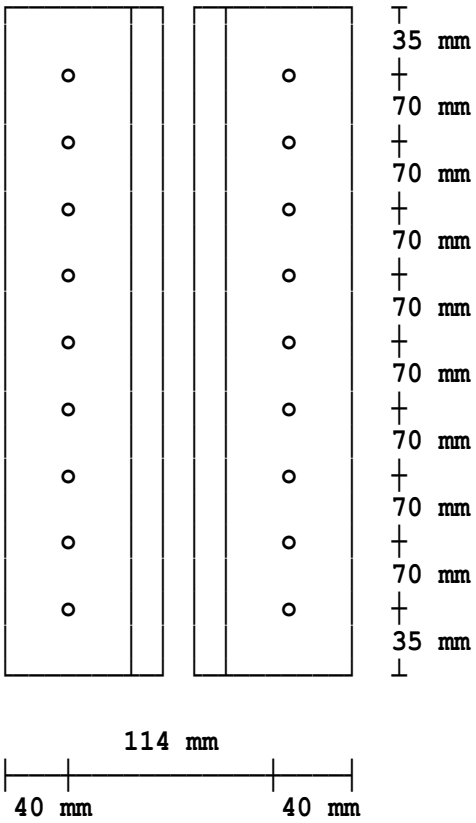

Location: Example 8.3.1 in 'Manual on Connections'

Angle seat connection

Analysis of connection follows treatment in 'Manual on Connections for Beam and Column Construction, Conforming with the requirements of BS 449 Part 2:1969', published by BCSA.

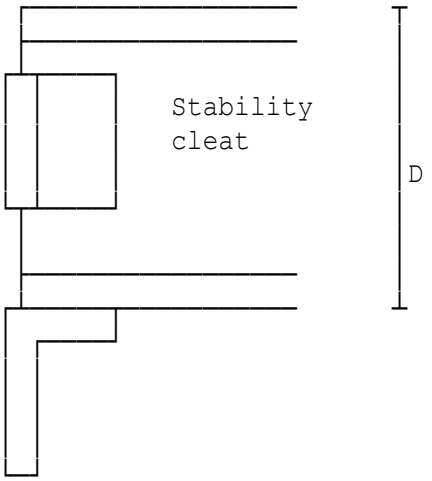

Vertical shear on seat V=156 kN

Serial length of angle seat A=150 mm
Serial width of angle cleat B=90 mm
Thickness of angle seat tseat=10 mm
Grade of angle seat agrade=43
Length of angle seat into paper ls=150 mm
Bolt diameter dia=20 mm
Bolt grade (4.6 or 8.8) bgrade=8.8
Grade of supporting member sgrade=43
Total thickness of support memb tt=14.2 mm
Available thick this connection ts=14.2 mm
Grade of supported beam grade=43
533 x 210 x 92 UB.
Root radius of angle seat r1=12 mm
Stiff bearing length at top of seat for 30 degree spread from tangent to root radius:
Bearing stress at root of seat fb=V*1000/(ld*tseat)=104 N/mm²
Permissible bearing stress pb=TABLE 9 for agrade=43
=210 N/mm²
Since fb ≤ pb (104 N/mm² ≤ 210 N/mm²)
Bearing stress at root of seat within allowable in TABLE 9.

SEATING BRACKET	**150 mm x 90 mm x 10 mm Angle**
SUMMARY	**Grade 43 x 150 mm long**
LEG CONNECTED	**Number of bolts 4**
TO SUPPORTING	**Diameter of bolts M 20 Grade 8.8**
SUPPORTED BEAM	**533 x 210 x 92 U.B.**
BEAM END CLEARANCE	**10 mm**

Location: Example 5.3.1 in 'Manual on Connections'

Flexible end plate connection

Analysis of connection follows treatment in 'Manual on Connections for Beam and Column Construction, Conforming with the requirements of BS 449 Part 2:1969', published by BCSA.

```
  <-----w----->
                 ________
                 ________
 ____________
|  |
|  |/                     |
|  |/                     |
|  |/                     |
|  |/                     |Dn
|__|/                     |
   |________________      |
   |________________      |
```

Vertical shear	V=380 kN
Diamater of bolts	dia=20 mm
Centres of bolts	crs=70 mm
Grade of sup beam and end plate	grade=43
Grade of supporting member	sgrade=43
533 x 210 x 92 UB.	
Total thick of supporting memb	tt=13.1 mm
Available thickness for connect	ts=13.1 mm
Thickness of end plate	tend=10 mm
Number of bolts in end plate	n=12
End distance	end=35 mm
Length of notch to cleat face	w=120 mm
Depth of notch	n'=65 mm
Width of end plate	width=180 mm
Bolt cross centres	bcc=90 mm
Weld leg length	leg=6 mm

END PLATE SUMMARY

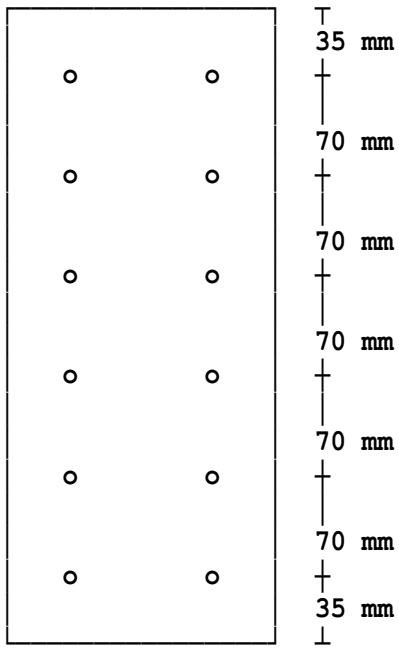

Thickness 10 mm

Location: Example 12.2.4.1 in 'Manual on Connections'

Extended end plate moment connection

Analysis of connection follows treatment in 'Manual on Connections for Beam and Column Construction, Conforming with the requirements of BS 449 Part 2:1969', published by BCSA.

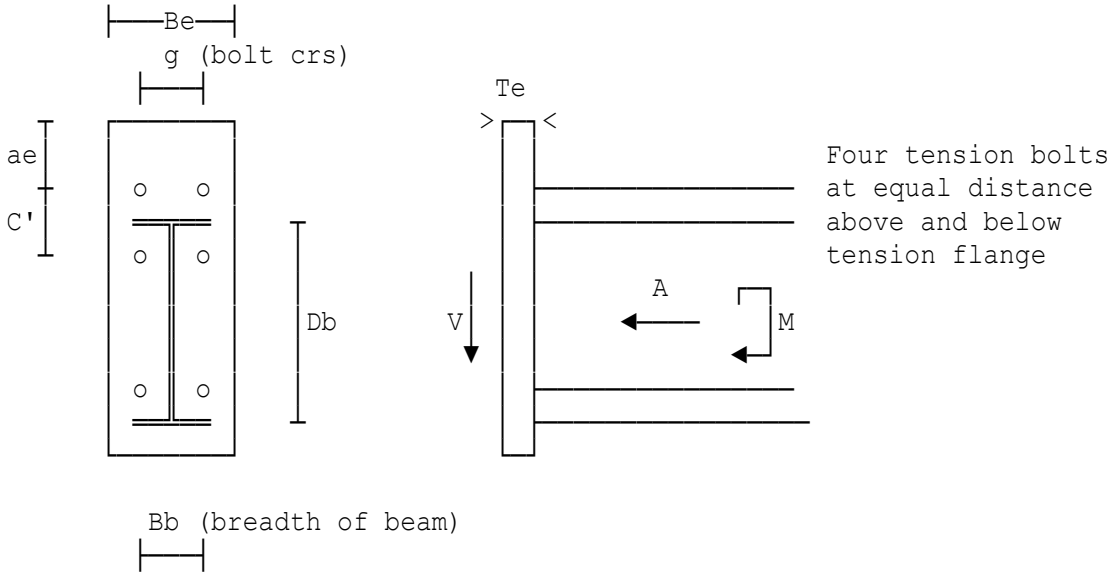

Bolt grade	bgrade=8.8
Grade of supported beam & plate	grade=43
Grade of supporting member	sgrade=43
406 x 178 x 54 UB.	
Bending moment on connection	M=95 kNm
Vertical shear on connection	V=80 kN
Axial force (positive = compr)	A=20 kN
Flange weld leg length	leg=10 mm
Web weld leg length	legw=6 mm
Diameter of bolts	d=20 mm
Bolt cross centres	g=100 mm
Vertical crs of tension bolts	C'=120 mm
Edge dist for outer tens bolts	ae=50 mm
Actual width of end plate	Be=200 mm
Actual length of end plate	De=560 mm
bottom of end plate	ab=60 mm
Thick of supporting memb avail	tsup=14.2 mm

CONNECTION SUMMARY

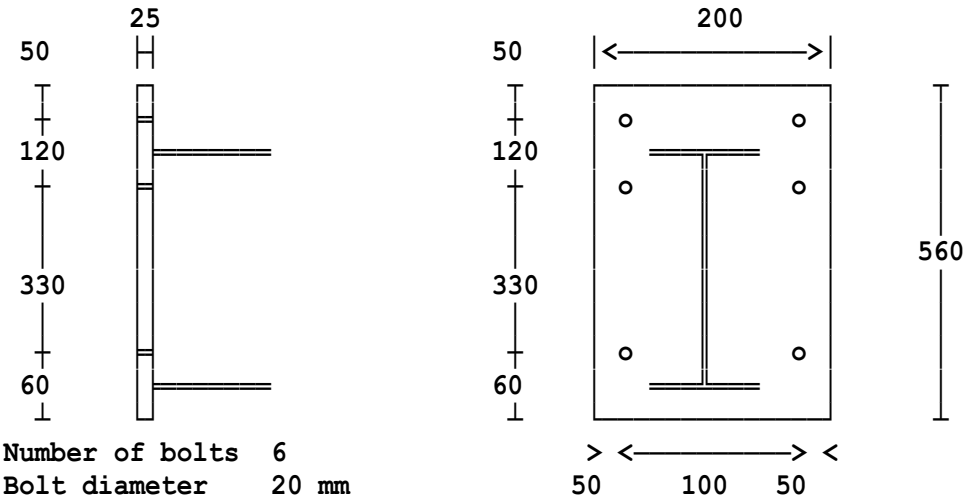

Number of bolts	**6**
Bolt diameter	**20 mm**
Bolt grade	**8.8**
Flange weld	**10 mm**
Web weld	**6 mm**
Beam / Rafter section	**406 x 178 x 54 Universal Beam**

Location: Ex1 Single storey agricultural portal frame building

Brief

The building is assumed to be a hot-rolled steel framed building. The Eurocode strategies for structural robustness and designing for the avoidance of disproportionate collapse as required by the UK Building Regulations will be considered.
The single storey agricultural building is of portal frame construction, it is 15 m wide, 30 m long and height to eaves is 6 m.

Building classification

There are four classes of building presented in the Approved Document A. The building under consideration is classified as Class 1. Consequences Class 1 assumes low consequences of failure. For buildings intended for more than one type of use, the "Consequences Class" should be that relating to the most onerous type.

Additional structural provisions

The minimum level of horizontal tying is 75 kN tension. This needs to be provided to all roof beam-to-column connections. Furthermore all connections between columns and roof rafters should be capable of sustaining a design tensile force of 75 kN.

	Building classification 1
DESIGN SUMMARY	**The minimum level of horizontal tying is 75 kN tension to all roof beam-to-column connections and all column-to-rafter connections.**

Location: Ex2 Three storey hotel steel-frame braced frame
construction

Brief

The building is assumed to be a hot-rolled steel framed building. The Eurocode strategies for structural robustness and designing for the avoidance of disproportionate collapse as required by the UK Building Regulations will be considered.
The columns are laid out on a 7.5 m x 7.5 m grid with floors spanning in one direction.

Permanent action	Gkr=4 kN/m²
Variable loading	Qkr=1 kN/m²
Permanent action	Gkf=4 kN/m²
Variable loading	Qkf=3.5 kN/m²

Factor Ψ1 for floor variable load psi1=0.7

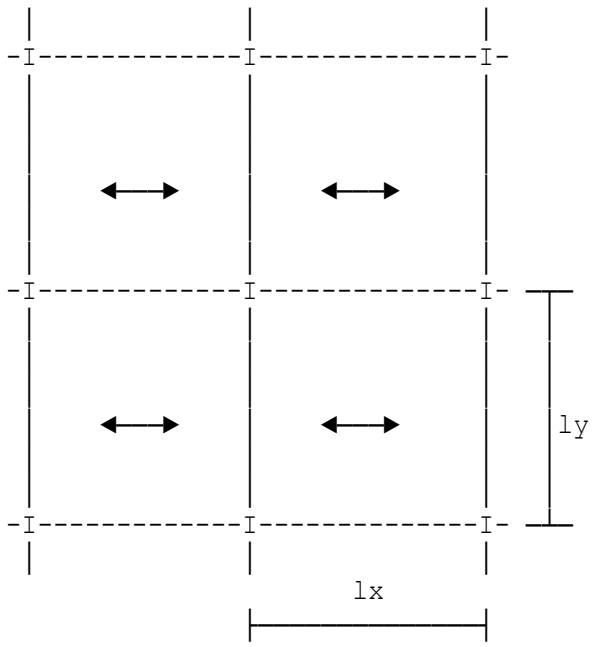

Partial floor plan

lx=7.5 m
ly=7.5 m

Building classification

There are four classes of building presented in the Approved Document A. The building under consideration is classified as Class 2A. Consequences Class 2A assumes medium consequences of failure (i.e. lower risk group). For buildings intended for more than one type of use, the "Consequences Class" should be that relating to the most onerous type.

DESIGN SUMMARY

Building classification 2A

Floor internal beam:

Primary tie resistance	**290.25 kN**
Secondary tie resistance	**75 kN**

Floor edge beam:

Primary tie resistance	**145.13 kN**
Secondary tie resistance	**75 kN**

Roof internal beam:

Primary tie resistance	**180 kN**
Secondary tie resistance	**75 kN**

Roof edge beam:

Primary tie resistance	**90 kN**
Secondary tie resistance	**75 kN**

Location: Ex3 Ten storey building of steel braced frame construction

Brief

The building is assumed to be a hot-rolled steel framed building. The Eurocode strategies for structural robustness and designing for the avoidance of disproportionate collapse as required by the UK Building Regulations will be considered.
The columns are laid out on a 6.0 m x 9.0 m grid with floors spanning in one direction.

Permanent action	Gkr=4 kN/m²
Variable loading	Qkr=1 kN/m²
Permanent action	Gkf=3.5 kN/m²
Variable loading	Qkf=6 kN/m²

Partial factors

Partial factor for perm.actions	gamG=1.35
Partial factor for vari.actions	gamQ=1.5
Factor Ψ1 for floor variable load	psi1=0.5

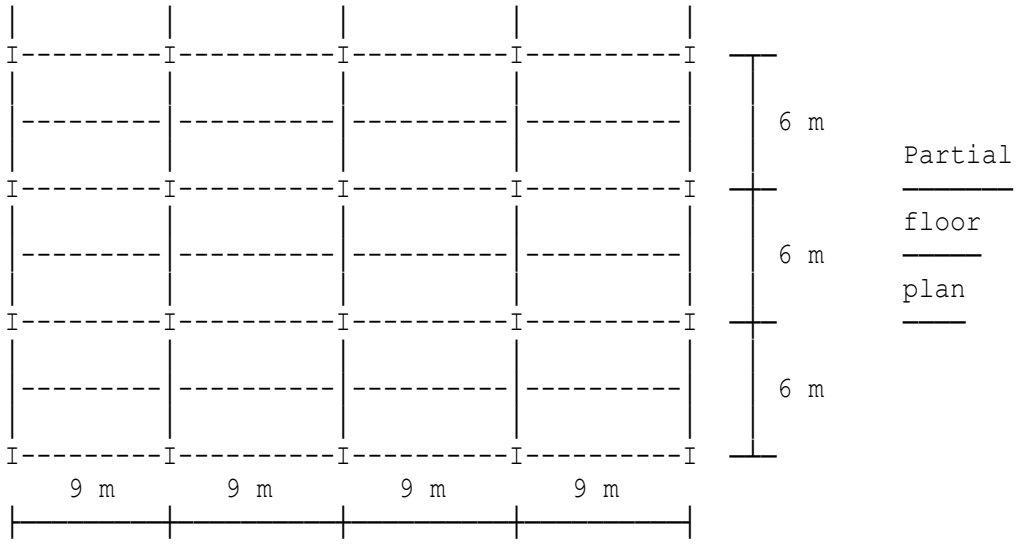

Building classification

There are four classes of building presented in the Approved Document A. The building under consideration is classified as Class 2B. Consequences Class 2B assumes medium consequences of failure (i.e. upper risk group). For buildings intended for more than one type of use, the "Consequences Class" should be that relating to the most onerous type.

DESIGN SUMMARY

Building classification 2B

Floor internal beam:

Primary tie resistance	**280.8 kN**
Secondary tie resistance	**140.4 kN**

Floor edge beam:

Primary tie resistance	**140.4 kN**
Secondary tie resistance	**75 kN**

Roof internal beam:

Primary tie resistance	**172.8 kN**
Secondary tie resistance	**86.4 kN**

Roof edge beam:

Primary tie resistance	**75.6 kN**
Secondary tie resistance	**75 kN**

Column splice resistance:

Internal column tie resistance	**722.01 kN**
Edge column tie resistance	**361.01 kN**

Location: Ex4 Ten storey building of steel braced frame construction

Brief

The building is assumed to be a hot-rolled steel framed building. The Eurocode strategies for structural robustness and designing for the avoidance of disproportionate collapse as required by the UK Building Regulations will be considered.
The columns are laid out on a 6.0 m x 9.0 m grid with floors spanning in one direction.

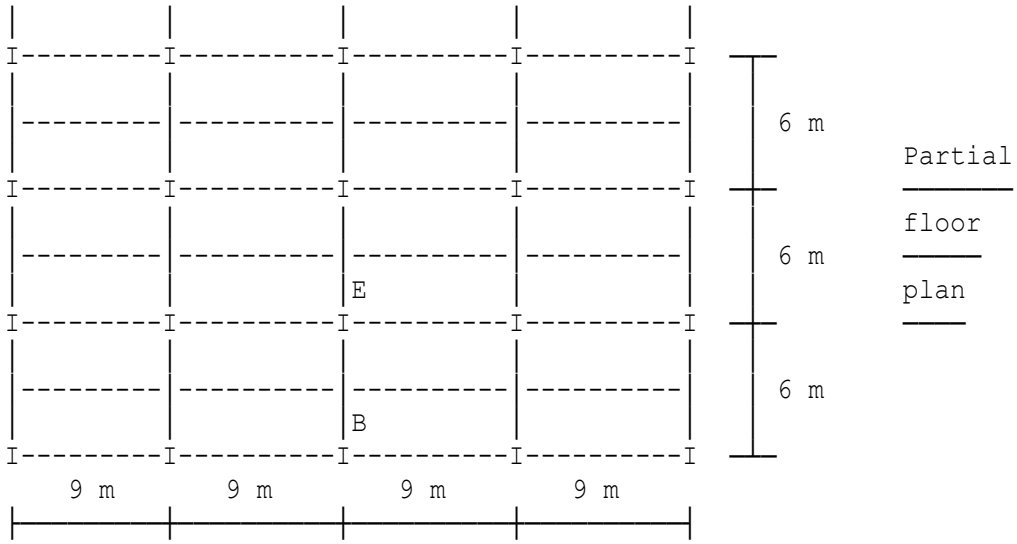

Building classification

There are four classes of building presented in the Approved Document A. The building under consideration is classified as Class 2B. Consequences Class 2B assumes medium consequences of failure (i.e. upper risk group). For buildings intended for more than one type of use, the "Consequences Class" should be that relating to the most onerous type.
Total floor area Afloor=1296 m²

WARNING:
As the area of floor collapse exceeds 15% of the total floor area or 100 m², the 'notional removal method' cannot be used for internal columns in this building.
Please consider using the 'tying method' or 'the key element method' to check for avoidance of disproportionate collapse.
Total floor area Afloor=1296 m²

WARNING:
As the area of floor collapse exceeds 15% of the total floor area or 100 m², the 'notional removal method' cannot be used for internal columns in this building.
Please consider using the 'tying method' or 'the key element method' to check for avoidance of disproportionate collapse.

WARNING:
The 'notional removal method' cannot be used. Consider an alternative design method.

Location: Ex5 Ten storey building of steel braced frame construction

Brief

The building is assumed to be a hot-rolled steel framed building. The Eurocode strategies for structural robustness and designing for the avoidance of disproportionate collapse as required by the UK Building Regulations will be considered.
The columns are laid out on a 6.0 m x 9.0 m grid with floors spanning in one direction.

Permanent action	Gkr=3.5 kN/m²
Variable loading	Qkr=1 kN/m²
Permanent action	Gkf=3.5 kN/m²
Variable loading	Qkf=6 kN/m²

Partial factors

Partial factor for perm.actions	gamG=1.35
Partial factor for vari.actions	gamQ=1.5
Factor Ψ1 for floor variable load	psi1=0.5

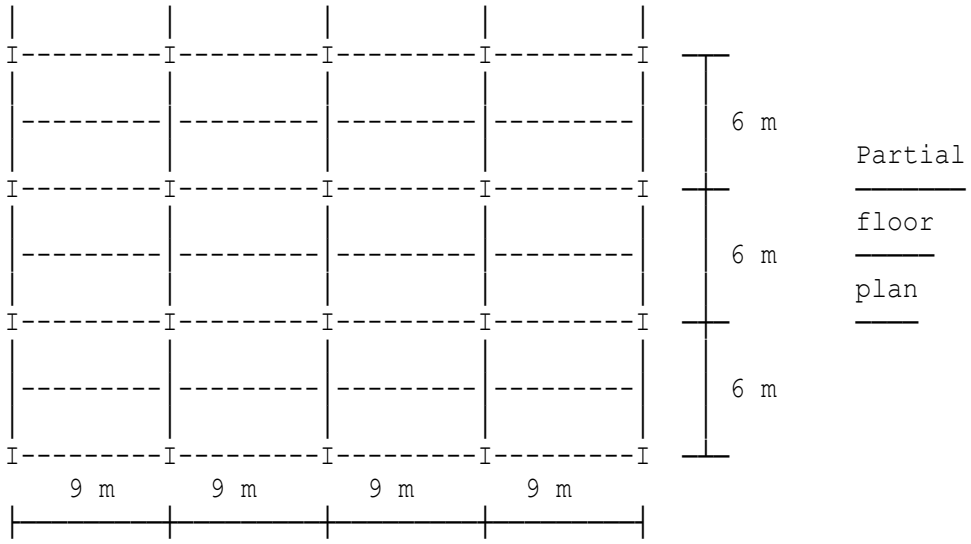

Building classification

There are four classes of building presented in the Approved Document A. The building under consideration is classified as Class 2B. Consequences Class 2B assumes medium consequences of failure (i.e. upper risk group). For buildings intended for more than one type of use, the "Consequences Class" should be that relating to the most onerous type.

Column height	Lc=5 m
Column depth	hc=300 mm
Column flange width	bc=300 mm

Actions

Maximum blast load:
The length of partition remaining attached to the key element after the blast is (bc+200) mm and this will be considered below.

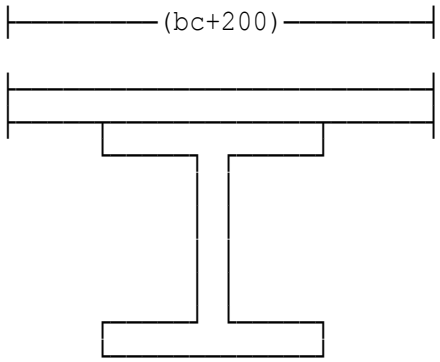

Partial Plan
on Column

Partitioning resistance to blast	wprb=2 kN/m²
Column spacing	cs=9 m
Column self weight	csw=50 kN
Number of storeys	ns=10

DESIGN SUMMARY

Building classification 2B

Design the key element column to resist the following combined effects:

1. **Design axial force 3398 kN**
   Design major axis moment 56.25 kNm
2. **Design axial force 3398 kN**
   Design minor axis moment 56.25 kNm

Location: Ex6 Three storey school (transfer beams at 1st floor)

Brief

The building is assumed to be a hot-rolled steel framed building. The Eurocode strategies for structural robustness and designing for the avoidance of disproportionate collapse as required by the UK Building Regulations will be considered.
The columns are laid out on a 6.0 m x 7.5 m grid with floors spanning in one direction. Transfer beams provided at 1st floor level only.

Permanent action	Gkr=3.5 kN/m²
Variable loading	Qkr=1 kN/m²
Permanent action	Gkf=3.5 kN/m²
Variable loading	Qkf=6 kN/m²

Partial factors

Partial factor for perm.actions gamG=1.35
Partial factor for vari.actions gamQ=1.5
Factor Ψ1 for floor variable load psi1=0.7

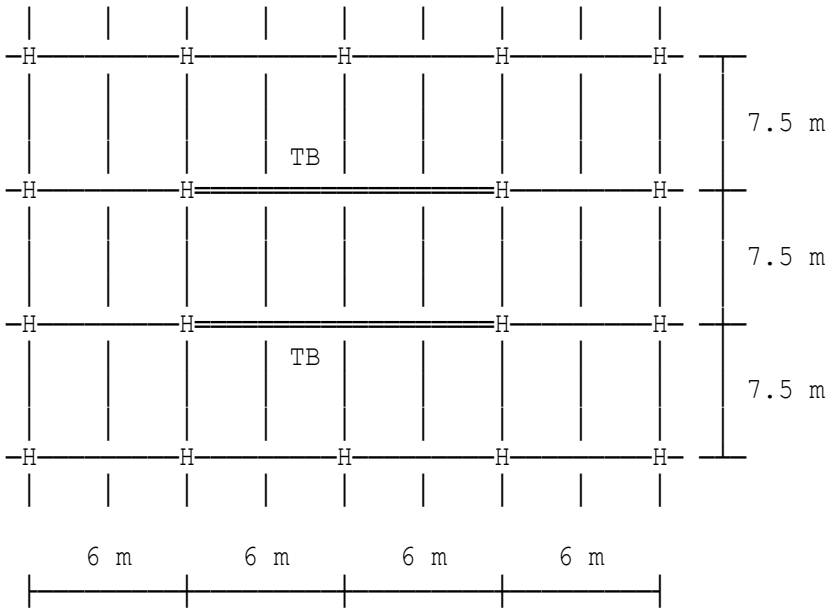

Partial first floor plan
(TB=Transfer Beam)

Building classification

There are four classes of building presented in the Approved Document A. The building under consideration is classified as Class 2B. Consequences Class 2B assumes medium consequences of failure (i.e. upper risk group). For buildings intended for more than one type of use, the "Consequences Class" should be that relating to the most onerous type.

Number of storeys	ns=3
Column self weight	csw=8 kN

DESIGN SUMMARY

Building classification 2B

Horizontal ties: Transfer beams including their connections should be capable of sustaining a design tensile force of 810.4 kN

Vertical ties: The connection between the transfer beam and the base of the column that it supports should be capable of sustaining a design tensile load of 346.5 kN

Location: Ex7 Three storey school (transfer beams at 1st floor)

Brief

The building is assumed to be a hot-rolled steel framed building. The Eurocode strategies for structural robustness and designing for the avoidance of disproportionate collapse as required by the UK Building Regulations will be considered.
The columns are laid out on a 6.0 m x 7.5 m grid with floors spanning in one direction. Transfer beams provided at 1st floor level only.

Permanent action	Gkr=3.5 kN/m²
Variable loading	Qkr=1 kN/m²
Permanent action	Gkf=3.5 kN/m²
Variable loading	Qkf=6 kN/m²

Partial factors

Partial factor for perm.actions gamG=1.35
Partial factor for vari.actions gamQ=1.5
Factor Ψ1 for floor variable load psi1=0.7

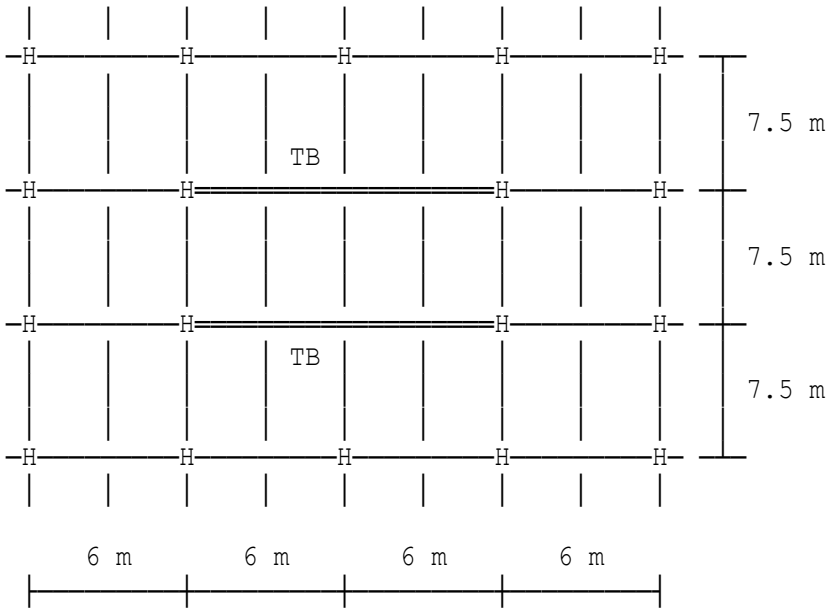

Partial first floor plan
(TB=Transfer Beam)

Building classification

There are four classes of building presented in the Approved Document A. The building under consideration is classified as Class 2B. Consequences Class 2B assumes medium consequences of failure (i.e. upper risk group). For buildings intended for more than one type of use, the "Consequences Class" should be that relating to the most onerous type.

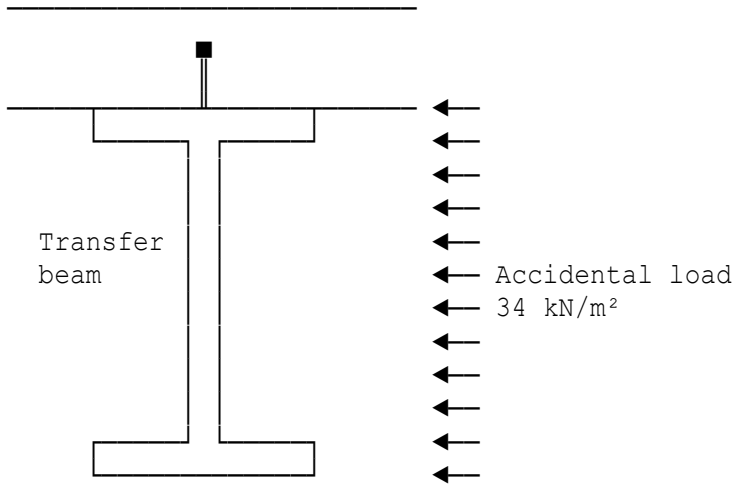

Stud shear resistance	Vs=50 kN
Stud spacing along transfer beam	ssp=300 mm
Transfer beam depth	hb=1036 mm
Web thickness	tw=30 mm
Strength of the steel	fyk=345 N/mm²

Downwards accidental action

The downwards accidental action on the transfer beam is applied to the top of the slab supported by the transfer beam. Assume the slab will remain attached to the transfer beam for this loading situation.

Number of storeys	ns=3
Column self weight	csw=8 kN
First floor storey height	Hs=4 m

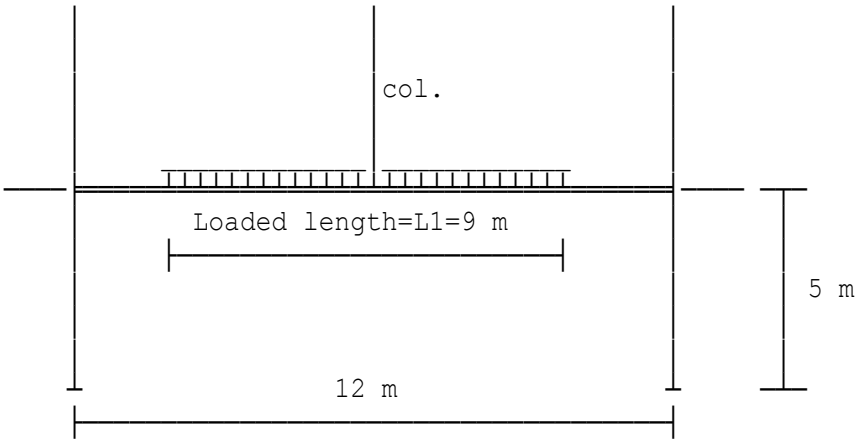

Accidental action applied to transfer beam

Upward push-out of shear studs	Fp=10 kN
Stud spacing along transfer beam	ssp=300 mm
Beam width	bb=310 mm

DESIGN SUMMARY

Building classification 2B
Design the key element transfer beam to resist the loading cases listed below.
Case 1: Transfer beam assumed to be restrained
Design major axis moment MyEd=6878.6 kNm
Case 2: Transfer beam assumed to be unrestrained
Design major axis moment MyEd'=1346.3 kNm

Column height	Lc=5 m
Column depth	hc=300 mm
Column flange width	bc=300 mm

Actions

Maximum blast load:
The length of partition remaining attached to the key element after the blast is (bc+200) mm and this will be considered below.

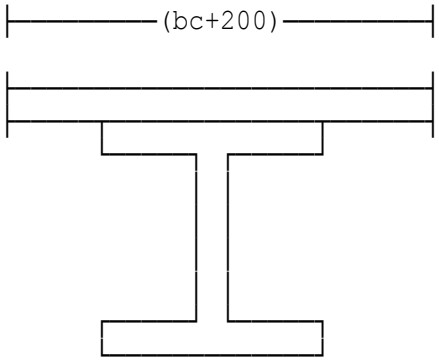

Partial Plan on Column

Partitioning resistance to blast	wprb=2 kN/m²
Column spacing	cs=7.5 m
Column self weight	csw=8 kN

DESIGN SUMMARY

Building classification 2B
Design the key element column to resist the following combined effects:
1. Design axial force 1031.8 kN
Design major axis moment 53.125 kNm
2. Design axial force 1031.8 kN
Design minor axis moment 53.125 kNm

Location: Ex8 Class 3 building

Location: Ex4 - Ten storey building (braced frame construction)

Brief

The building is assumed to be a hot-rolled steel framed building. The Eurocode strategies for structural robustness and designing for the avoidance of disproportionate collapse as required by the UK Building Regulations will be considered.
The columns are laid out on a 5.0 m x 5.0 m grid.

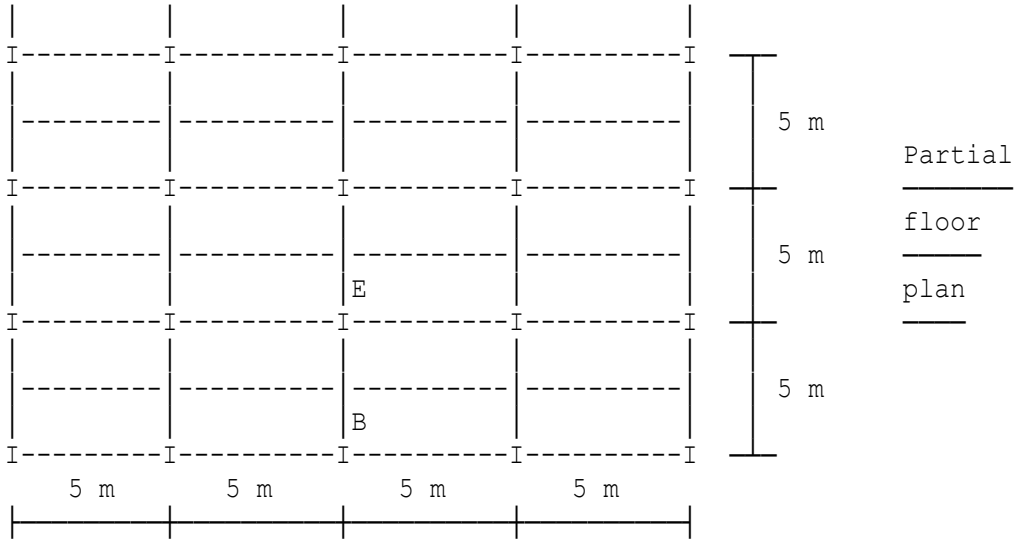

Building classification

There are four classes of building presented in the Approved Document A. The building under consideration is classified as Class 2B. Consequences Class 2B assumes medium consequences of failure (i.e. upper risk group). For buildings intended for more than one type of use, the "Consequences Class" should be that relating to the most onerous type.
Total floor area Afloor=1296 m²
Total floor area Afloor=1296 m²

	Building classification 2B	
	Internal column notional removal:	
DESIGN	**Total area of floor collapse**	**100 m²**
SUMMARY	**Total floor area**	**1296 m²**
	Permitted damaged floor area	**100 m²**
	Edge column notional removal:	
	Total area of floor collapse	**70 m²**
	Total floor area	**1296 m²**
	Perm.local damaged floor area	**100 m²**

Location: Example 12.2.4.1 in 'Manual on Connections'

Bolts in tension and shear

Calculations are in accordance with BS449 : Part 2 : 1969.

Number of bolts in tension	nt=4
Tension on group	F=232.5 kN
Number of bolts in shear	ns=6
Shear force on group	V=80 kN
Bolt diameter	d=20 mm
Allowable tensile stress in bolt	pt=281 N/mm²
Allowable shear stress in bolt	ps=187 N/mm²

Check bolts for shear

The calculated shear stress based on the nominal bolt diameter

Shear per bolt	v=V*1000/ns=13333 N
Gross area of bolt	garea=PI*d^2/4=314.16 mm²

Since fs ≤ ps (42.441 N/mm² ≤ 187 N/mm²) shear stress in bolts within allowable.

Check bolts for tension

Tension per bolt	f=F*1000/nt=58125 N
Approx. bolt tensile stress area	tarea=0.75*PI*d^2/4=235.62 mm²
Tensile stress in bolts	ft=f/tarea=246.69 N/mm²

Since ft ≤ pt (246.69 N/mm² ≤ 281 N/mm²) tensile stress in bolts within allowable.

Check for combined shear and tension

The interaction formula of BS449, Subclause 50.d is used for this investigation factor=fs/ps+ft/pt=1.1049

Combined stress factor does not exceed 1.4, therefore bolts are satisfactory.

Copyright 1986-2024 Fitzroy Systems Ltd.

Location: Ex1 - Bolts in tension and shear

Bolts in tension and shear

Calculations are in accordance with BS EN 1993-1-8:2005 and publication entitled 'Joints in Steel Construction: Simple Joints to EC3' by SCI.

Number of bolts in tension	nt=4
Tension on group	NEd=232.5 kN
Number of bolts in shear	ns=6
Shear force on group	VEd=80 kN
Bolt diameter	bd=20 mm

DESIGN SUMMARY	**Number of bolts in shear**	**6**
	Number of bolts in tension	**4**
	Design shear force per bolt	**13.333 kN**
	Design shear resistance per bolt	**94.08 kN**
	Design tension per bolt	**58.125 kN**
	Design tension resistance per bolt	**141.12 kN**
	Interaction factor	**0.43593 ≤ 1**

Location: Example 11.3.2. 'Manual on Connections'

Column base with moment

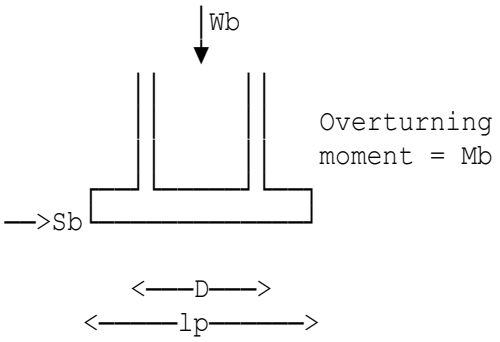

Elevation on column base

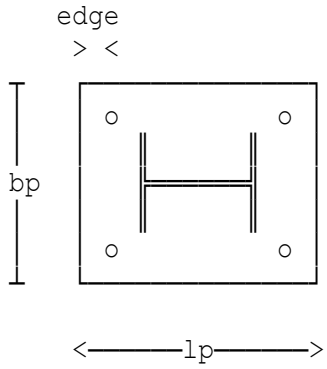

Plan on column base

Overturning moment	Mb=75 kNm
Horizontal shear force	Sb=25 kN
Axial compressive force	Wb=1800 kN
305 x 305 x 198 UC.	
Length of baseplate	lp=700 mm
Breadth of baseplate	bp=700 mm
Allowable pressure on bedding	pg=5 N/mm²
Edge distance for bolts	edge=75 mm
Grade of column and slab base	grade=43
Grade of bolts (4.6 or 8.8)	bgrade=4.6
Weld leg length	leg=8 mm
Number of bolts	n=4
Diameter of holding down bolts	dia=20 mm

SUMMARY OF	**Size 700 mm x 700 mm x 55 mm**
BASEPLATE	**Grade 43 steel**
REQUIREMENTS	**Edge distance 75 mm**
	Number of H.D. bolts 4
	Diameter of bolts M 20
	Grade 4.6
	Size of fillet weld 8 mm all round

Location: Ex1 - Default example

Design of Guardrailing

Material: Steel hollow tubular section or solid circular section.

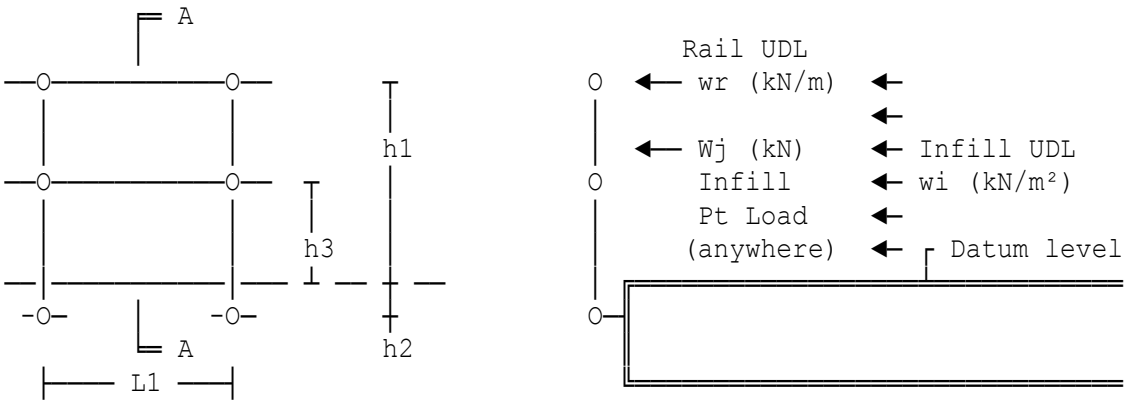

Elevation Section A-A

Horizontal spacing of posts	L1=1.83 m
Distance to top rail from datum	h1=1.1 m
Distance to fixing from datum	h2=0.1 m
Limiting bending Stress	pb=165 N/mm²

Loading

BS 6399-1:1996:Table 4:Horiz loads on parapets and balustrades.
Loading is deemed to act at 1.1 metres above the Datum level(Cl 10).
In these calculations the vertical Posts are assumed to be attached to the side of the platform or walkway, 100 mm below Datum Level.

Horiz UD loading on top rail	wr=0.22 kN/m
Horiz UD loading on infill	wi=0 kN/m²
Horiz Point Load on infill	Wj=0 kN

SUMMARY
Limiting deflection criterion span/120
POST : 40 mm Nominal Bore Medium-Duty Tubular Steel Post
RAIL : 20 mm Nominal Bore Medium-Duty Tubular Steel Rail

Location: Ex2 - All three loads applied

Design of Guardrailing

Material: Steel hollow tubular section or solid circular section.

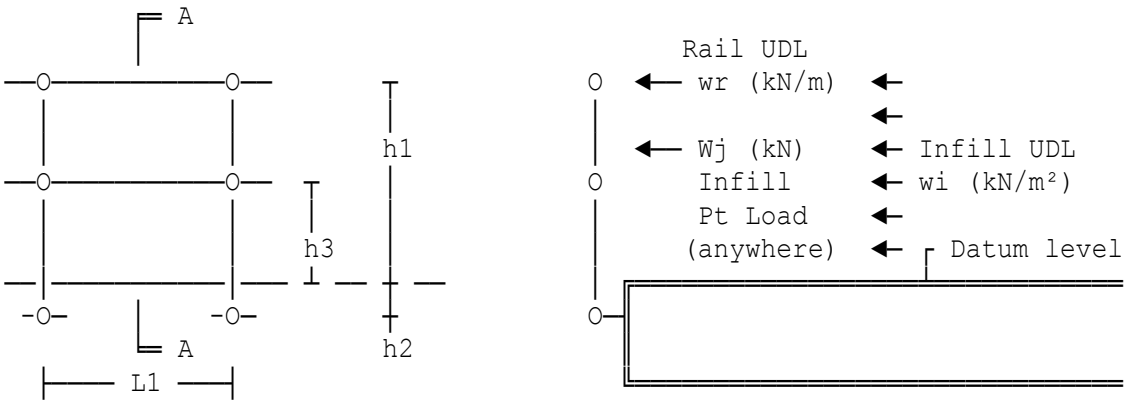

Elevation Section A-A

Horizontal spacing of posts	L1=1 m
Distance to top rail from datum	h1=1.1 m
Distance to fixing from datum	h2=0.1 m
Limiting bending Stress	pb=165 N/mm²

Loading

BS 6399-1:1996:Table 4:Horiz loads on parapets and balustrades.
Loading is deemed to act at 1.1 metres above the Datum level(Cl 10).
In these calculations the vertical Posts are assumed to be attached to the side of the platform or walkway, 100 mm below Datum Level.

Horiz UD loading on top rail	wr=3 kN/m
Horiz UD loading on infill	wi=1.5 kN/m²
Horiz Point Load on infill	Wj=1.5 kN

SUMMARY
Limiting deflection criterion span/120
POST : 88.9 mm Outside Diam CHS Post; Wall thickness 5 mm
RAIL : 25 mm Nominal Bore Medium-Duty Tubular Steel Rail

Location: Ex1 - Default example using S355 steel

Design of Guardrailing

Steel guardrailing design is in accordance with BS EN 1993-1-1:2005 and NA to BS EN 1993-1-1:2005 (with amendment A1:2014). The loading is to BS 6399:Part 1:1984 (Table 4). Steel hollow tubular section or solid circular section will be utilised for the post and rails.

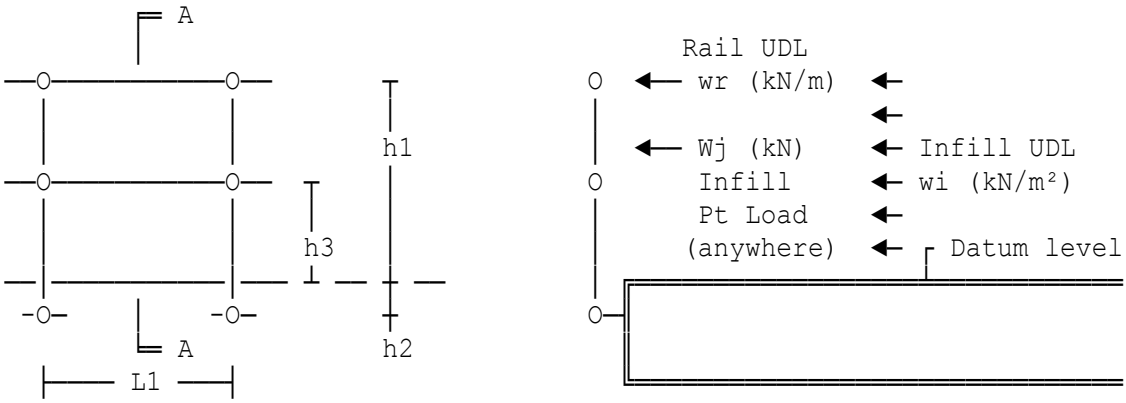

Elevation Section A-A

Horizontal spacing of posts	L1=1.83 m
Distance to top rail from datum	h1=1.1 m
Distance to fixing from datum	h2=0.1 m

Design assumptions

Loading is deemed to act at 1.1 metres above the datum level. Vertical posts are assumed to be attached to the side of the platform or walkway, 100 mm below datum level.

Characteristic loading

Horizontal UDL on top rail	wr=0.22 kN/m
Horizontal UDL on infill	wi=0 kN/m²
Horizontal Point Load on infill	Wj=0 kN

Design of top rail

Design BM due to rail UDL	MEdr=gamQ*Wwr*L1/8=0.13814 kNm
Maximum design bending moment	MEdrmax=0.13814 kNm
Actual horiz deflection of rail	Drmax=9.4727 mm
Permiss horiz deflection of rail	Drmaxp=15.25 mm
Design bending moment (rail)	MEdrmax=0.13814 kNm
Design moment resistance	McRdr=fy*Welr*10^3/gamM0=0.4336 kNm

Design of vertical post

Unfactored horizontal load at top of post:
Due to horizontal UDL on rail Wwr=0.4026 kN

Design BM at base of post due to UDL on rail:
MEdpwr=gamQ*Wwr*(h1+h2)=0.72468 kNm
Max design BM is due to the horizontal UDL on the rail.
Maximum design bending moment MEdpmax=0.72468 kNm

Try 40 mm Nominal Bore Medium-Duty Tubular Steel Post
Actual deflection (post) Dpmax=(Wpmax*(h1+h2)^3/(3*E*Ip))
*1000=8.9895 mm
Permissible deflection (post) Dpmaxp=10 mm
Design bending moment (post) MEdpmax=0.72468 kNm
Design moment resistance McRdp=fy*Welp*10^3/gamM0=1.8387 kNm

DESIGN SUMMARY

Limiting deflection criterion span/120

POST : 40 mm Nominal Bore Medium-Duty Tubular Steel Post
Minimum 2nd Moment of area of post Ip=12.284 cm^4

RAIL : 20 mm Nominal Bore Medium-Duty Tubular Steel Rail
Minimum 2nd Moment of area of rail Ir=1.615 cm^4

Location: Ex2 - All 3 loads applied using S355 steel

Design of Guardrailing

Steel guardrailing design is in accordance with BS EN 1993-1-1:2005 and NA to BS EN 1993-1-1:2005 (with amendment A1:2014). The loading is to BS 6399:Part 1:1984 (Table 4). Steel hollow tubular section or solid circular section will be utilised for the post and rails.

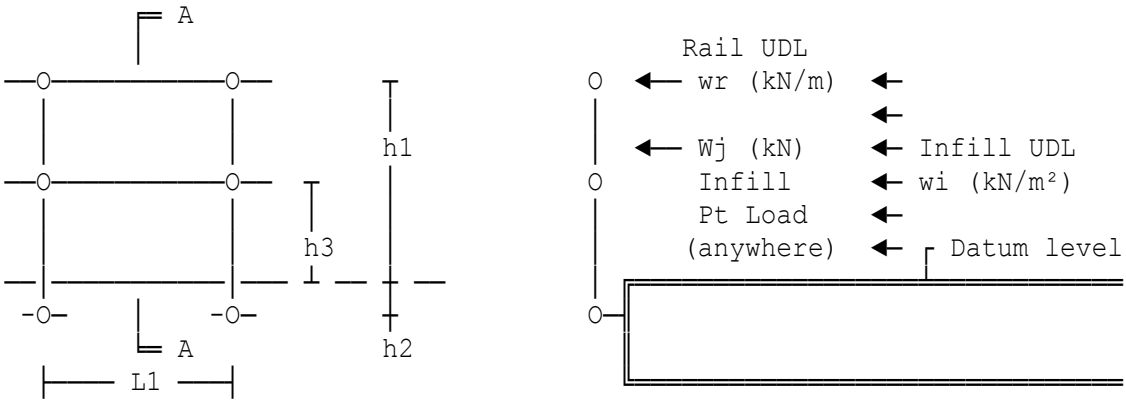

Elevation Section A-A

Horizontal spacing of posts	L1=1 m
Distance to top rail from datum	h1=1.1 m
Distance to fixing from datum	h2=0.1 m

Design assumptions

Loading is deemed to act at 1.1 metres above the datum level. Vertical posts are assumed to be attached to the side of the platform or walkway, 100 mm below datum level.

Characteristic loading

Horizontal UDL on top rail	wr=3 kN/m
Horizontal UDL on infill	wi=1.5 kN/m²
Horizontal Point Load on infill	Wj=1.5 kN

Design of top rail

Design bending moments:

Due to rail UDL	MEdr=gamQ*Wwr*L1/8=0.5625 kNm
Due to infill UDL	MEdwi=gamQ*Wwi*L1/8=0.15469 kNm
Due to infill PL at mid-span	MEdWj=gamQ*Wj*L1/4=0.5625 kNm
Maximum design bending moment	MEdrmax=0.5625 kNm
Actual horiz deflection of rail	Drmax=6.1655 mm
Permiss horiz deflection of rail	Drmaxp=8.3333 mm
Design bending moment (rail)	MEdrmax=0.5625 kNm
Design moment resistance	McRdr=fy*Welr*10^3/gamM0=0.781 kNm

Design of vertical post

Unfactored horizontal load at top of post:
Due to horizontal UDL on rail Wwr=3 kN
Due to horizontal UDL on Infill Wwi=0.825 kN
Due to Point Load on infill Wj=1.5 kN

Design bending moments at base of post:
Due to rail UDL MEdpwr=gamQ*Wwr*(h1+h2)=5.4 kNm
Due to infill UDL Bpwi=gamQ*Wwi*(h1+h2)=1.485 kNm
Due to infill PL BpWj=gamQ*Wj*(h1+h2)=2.7 kNm
Max design BM is due to the horizontal UDL on the rail.
Maximum design bending moment MEdpmax=5.4 kNm

Try 88.9 mm Outside Diam CHS Post, with Wall thickness 4 mm
Actual deflection (post) Dpmax=(Wpmax*(h1+h2)^3/(3*E*Ip))
*1000=8.5447 mm
Permissible deflection (post) Dpmaxp=10 mm
Design bending moment (post) MEdpmax=5.4 kNm
Design moment resistance McRdp=fy*Welp*10^3/gamM0=7.7035 kNm

DESIGN SUMMARY

Limiting deflection criterion span/120

POST : 88.9 mm Outside Diam CHS Post
Post Wall thickness 4 mm
Minimum 2nd Moment of area of post Ip=96.3 cm^4

RAIL : 28 mm Diameter Solid Circular-section Steel Rail
Minimum 2nd Moment of area of rail Ir=3.017 cm^4

Location: Ex3 - All 3 loads applied (Stainless steel CHS's)

Design of handrails and balustrades

Stainless Steel handrails & balustrades design using CHS in accordance with BS EN 1993-1-4:2006 and NA to BS EN 1993-1-4:2006 (with amendment A1:2015). The loading is to the National Annex to BS EN 1991-1-1:2002 Table NA.8 - Horizontal loads on partition walls and parapets.

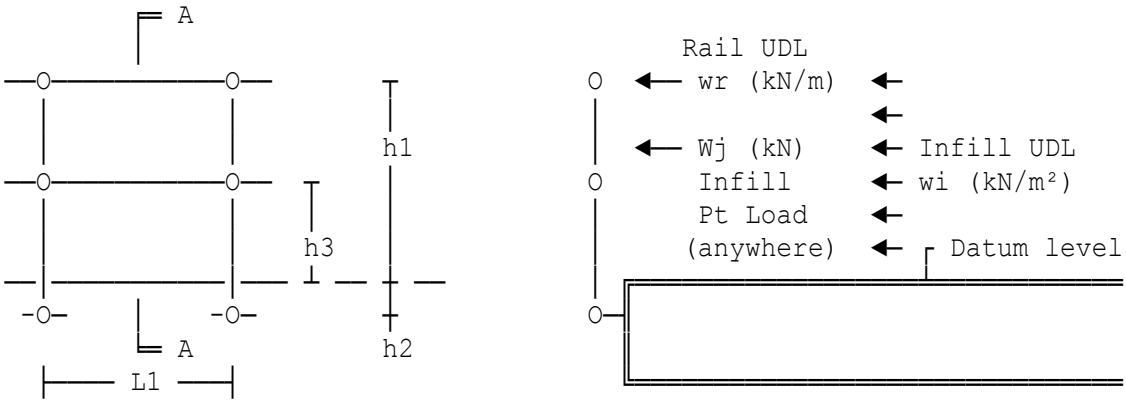

Elevation Section A-A

Horizontal spacing of posts	L1=1 m
Distance to top rail from datum	h1=1.1 m
Distance to fixing from datum	h2=0.1 m
48.3 x 3.2 thick CHS	
88.9 x 5 thick CHS	
Young's Modulus	E=200 kN/mm²

Design assumptions

Loading is deemed to act at 1.1 metres above the datum level. Vertical posts are assumed to be attached to the side of the platform or walkway, 100 mm below datum level.

Characteristic loading

Horizontal UDL on top rail	wr=3 kN/m
Horizontal UDL on infill	wi=1.5 kN/m²
Horizontal Point Load on infill	Wj=1.5 kN

Design of top rail

Design bending moments:

Due to rail UDL	MEdr=gamQ*Wwr*L1/8=0.5625 kNm
Due to infill UDL	MEdwi=gamQ*Wwi*L1/8=0.15469 kNm
Due to infill PL at mid-span	MEdWj=gamQ*Wj*L1/4=0.5625 kNm
Maximum design bending moment	MEdrmax=0.5625 kNm
Actual horiz deflection of rail	Drmax=1.6858 mm
Permiss horiz deflection of rail	Drmaxp=8.3333 mm

Design bending moment (rail) MEdrmax=0.5625 kNm
Design moment resistance McRdr=fy*Wplr*10^3/gamM0=1.304 kNm

Design of vertical post

Unfactored horizontal load at top of post:
Due to horizontal UDL on rail Wwr=3 kN
Due to horizontal UDL on Infill Wwi=0.825 kN
Due to Point Load on infill Wj=1.5 kN

Design bending moments at base of post:
Due to rail UDL MEdpwr=gamQ*Wwr*(h1+h2)=5.4 kNm
Due to infill UDL Bpwi=gamQ*Wwi*(h1+h2)=1.485 kNm
Due to infill PL BpWj=gamQ*Wj*(h1+h2)=2.7 kNm
Max design BM is due to the horizontal UDL on the rail.
Maximum design bending moment MEdpmax=5.4 kNm
Actual deflection (post) Dpmax=(Wpmax*(h1+h2)^3/(3*E*Ip))
*1000=7.4246 mm
Permissible deflection (post) Dpmaxp=10 mm
Design bending moment (post) MEdpmax=5.4 kNm
Design moment resistance McRdp=fy*Wplp*10^3/gamM0=7.0476 kNm

DESIGN SUMMARY

Limiting deflection criterion span/120

POST : 88.9 mm Outside Diam CHS Stainless Steel Post
Post Wall thickness 5 mm
Minimum 2nd Moment of area of post Ip=116.37 cm^4
RAIL : 48.3 mm Outside Diameter CHS Stainless Steel Rail
Rail Wall thickness 3.2 mm
Minimum 2nd Moment of area of rail Ir=11.586 cm^4

Location: Ex4 - Hot finished CHS for rail & Post

Design of Guardrailing

Steel guardrailing design is in accordance with BS EN 1993-1-1:2005 and NA to BS EN 1993-1-1:2005 (with amendment A1:2014). The loading is to BS 6399:Part 1:1984 (Table 4). Steel hollow tubular section or solid circular section will be utilised for the post and rails.

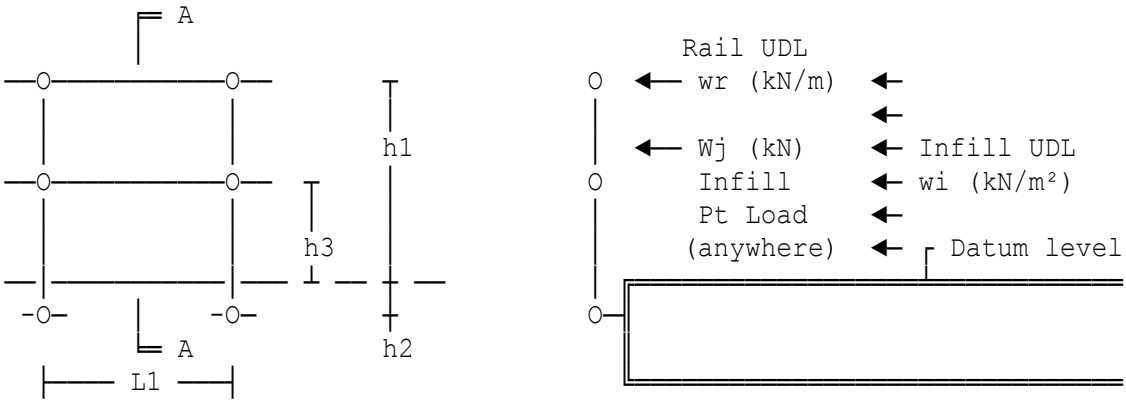

Elevation Section A-A

Horizontal spacing of posts L1=1.346 m
Distance to top rail from datum h1=1.2 m
Distance to fixing from datum h2=0.097 m
42.4 dia x 3.2 thick CHS - Hot finished.
Properties (cm): A=3.9408 iy=1.3905 Wely=3.5943 Wply=4.9282 Iy=7.62
It=15.24
88.9 dia x 4 thick CHS - Hot finished.
Properties (cm): A=10.669 iy=3.005 Wely=21.674 Wply=28.853 Iy=96.34
It=192.68

Design assumptions

Loading is deemed to act at 1.2 metres above the datum level. Vertical posts are assumed to be attached to the side of the platform or walkway, 97 mm below datum level.

Characteristic loading

Horizontal UDL on top rail wr=1.5 kN/m
Horizontal UDL on infill wi=1.5 kN/m²
Horizontal Point Load on infill Wj=1.5 kN

Design of top rail

Design bending moments:
Due to rail UDL MEdr=gamQ*Wwr*L1/8=0.50955 kNm
Due to infill UDL MEdwi=gamQ*Wwi*L1/8=0.30573 kNm
Due to infill PL at mid-span MEdWj=gamQ*Wj*L1/4=0.75713 kNm
Maximum design bending moment MEdrmax=0.75713 kNm

Actual horiz deflection of rail Drmax=4.7622 mm
Permiss horiz deflection of rail Drmaxp=11.217 mm
Design bending moment (rail) MEdrmax=0.75713 kNm
Design moment resistance McRdr=fy*Wplr*10^3/gamM0=1.7495 kNm

Design of vertical post

Unfactored horizontal load at top of post:
Due to horizontal UDL on rail Wwr=2.019 kN
Due to horizontal UDL on Infill Wwi=1.2114 kN
Due to Point Load on infill Wj=1.5 kN

Design bending moments at base of post:
Due to rail UDL MEdpwr=gamQ*Wwr*(h1+h2)=3.928 kNm
Due to infill UDL Bpwi=gamQ*Wwi*(h1+h2)=2.3568 kNm
Due to infill PL BpWj=gamQ*Wj*(h1+h2)=2.9183 kNm
Max design BM is due to the horizontal UDL on the rail.
Maximum design bending moment MEdpmax=3.928 kNm

Try 88.9 mm Outside Diam CHS Post, with Wall thickness 4 mm
Actual deflection (post) Dpmax=(Wpmax*(h1+h2)^3/(3*E*Ip))
*1000=7.2579 mm
Permissible deflection (post) Dpmaxp=10.808 mm
Design bending moment (post) MEdpmax=3.928 kNm
Design moment resistance McRdp=fy*Wplp*10^3/gamM0=10.243 kNm

DESIGN SUMMARY

Limiting deflection criterion span/120

POST : 88.9 mm Outside Diam CHS - Hot finished
Post Wall thickness 4 mm
Minimum 2nd Moment of area of post Ip=96.34 cm^4

RAIL : 42.4 mm Outside Diam CHS - Hot finished
Rail Wall thickness 3.2 mm
Minimum 2nd Moment of area of rail Ir=7.62 cm^4

Location: Ex5 - Hot finished SHS for rail & Post

Design of Guardrailing

Steel guardrailing design is in accordance with BS EN 1993-1-1:2005 and NA to BS EN 1993-1-1:2005 (with amendment A1:2014). The loading is to BS 6399:Part 1:1984 (Table 4). Steel hollow tubular section or solid circular section will be utilised for the post and rails.

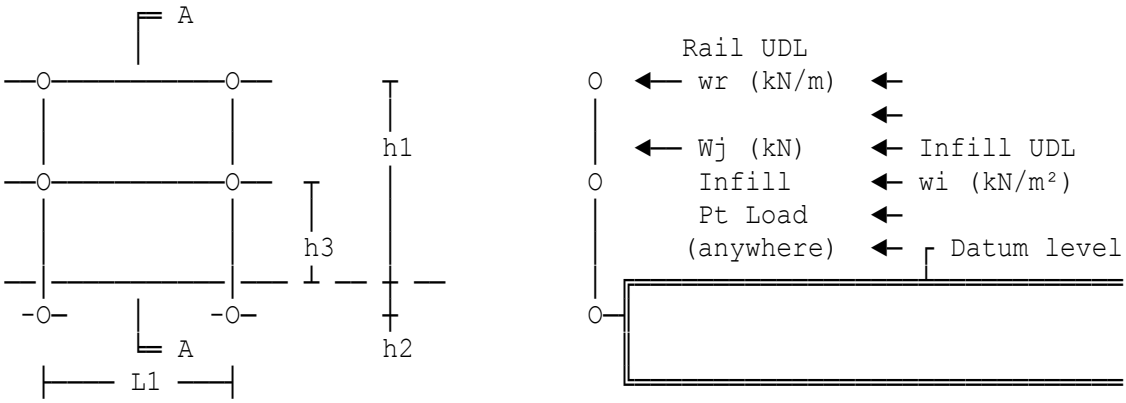

Elevation Section A-A

Horizontal spacing of posts L1=1.346 m
Distance to top rail from datum h1=1.2 m
Distance to fixing from datum h2=0.097 m
40 x 40 x 3.2 SHS - Hot finished.
Properties (cm): A=4.6 iy=1.49 Wely=5.11 Wply=6.28 Iy=10.2 It=16.5
Wt=7.42
80 x 80 x 4 SHS - Hot finished.
Properties (cm): A=12 iy=3.09 Wely=28.6 Wply=34 Iy=114 It=180
Wt=41.9

Design assumptions

Loading is deemed to act at 1.2 metres above the datum level. Vertical posts are assumed to be attached to the side of the platform or walkway, 97 mm below datum level.

Characteristic loading

Horizontal UDL on top rail wr=1.5 kN/m
Horizontal UDL on infill wi=1.5 kN/m²
Horizontal Point Load on infill Wj=1.5 kN

Design of top rail

Design bending moments:
Due to rail UDL MEdr=gamQ*Wwr*L1/8=0.50955 kNm
Due to infill UDL MEdwi=gamQ*Wwi*L1/8=0.30573 kNm
Due to infill PL at mid-span MEdWj=gamQ*Wj*L1/4=0.75713 kNm
Maximum design bending moment MEdrmax=0.75713 kNm

Actual horiz deflection of rail Drmax=3.5577 mm
Permiss horiz deflection of rail Drmaxp=11.217 mm
Design bending moment (rail) MEdrmax=0.75713 kNm
Design moment resistance McRdr=fy*Wplr*10^3/gamM0=2.2294 kNm

Design of vertical post

Unfactored horizontal load at top of post:
Due to horizontal UDL on rail Wwr=2.019 kN
Due to horizontal UDL on Infill Wwi=1.2114 kN
Due to Point Load on infill Wj=1.5 kN

Design bending moments at base of post:
Due to rail UDL MEdpwr=gamQ*Wwr*(h1+h2)=3.928 kNm
Due to infill UDL Bpwi=gamQ*Wwi*(h1+h2)=2.3568 kNm
Due to infill PL BpWj=gamQ*Wj*(h1+h2)=2.9183 kNm
Max design BM is due to the horizontal UDL on the rail.
Maximum design bending moment MEdpmax=3.928 kNm

Try 80 x 80 x 4 SHS - Hot finished (Post)
Actual deflection (post) Dpmax=(Wpmax*(h1+h2)^3/(3*E*Ip))
*1000=6.1335 mm
Permissible deflection (post) Dpmaxp=10.808 mm
Design bending moment (post) MEdpmax=3.928 kNm
Design moment resistance McRdp=fy*Wplp*10^3/gamM0=12.07 kNm

DESIGN SUMMARY

Limiting deflection criterion span/120

POST : 80 x 80 x 4 SHS - Hot finished
Minimum 2nd Moment of area of post Ip=114 cm^4

RAIL : 40 x 40 x 3.2 SHS - Hot finished
Minimum 2nd Moment of area of rail Ir=10.2 cm^4

Location: Ex6 - Hot finished RHS for rail & Post

Design of Guardrailing

Steel guardrailing design is in accordance with BS EN 1993-1-1:2005 and NA to BS EN 1993-1-1:2005 (with amendment A1:2014). The loading is to BS 6399:Part 1:1984 (Table 4). Steel hollow tubular section or solid circular section will be utilised for the post and rails.

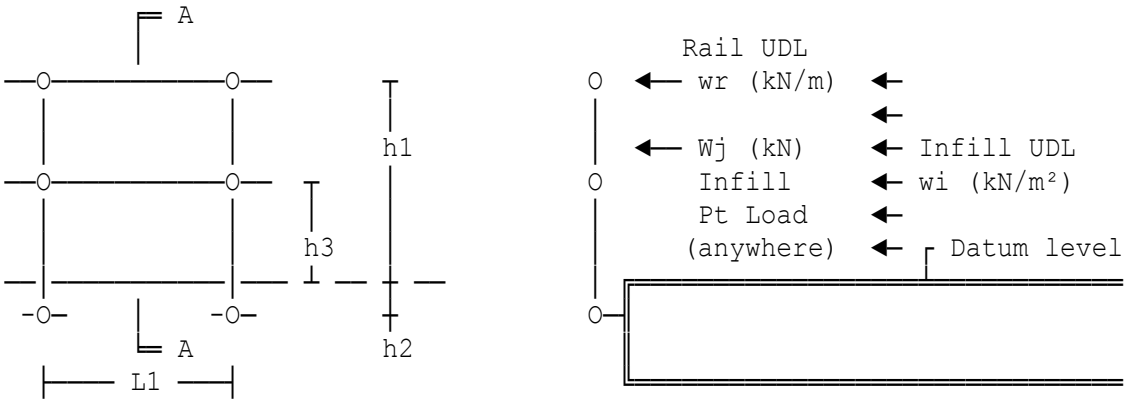

Elevation Section A-A

Horizontal spacing of posts L1=1.346 m
Distance to top rail from datum h1=1.2 m
Distance to fixing from datum h2=0.097 m
60 x 40 x 3 RHS - Hot finished.
Properties (cm): A=5.54 iz=1.58 Wely=8.82 Wply=10.9 Iy=26.5
It=29.2 Wt=11.2 Welz=6.95 Wplz=8.19 Iz=13.9 iy=2.18
100 x 50 x 3.2 RHS - Hot finished.
Properties (cm): A=9.08 iz=2.07 Wely=23.2 Wply=28.9 Iy=116
It=93.4 Wt=26.4 Welz=15.5 Wplz=17.7 Iz=38.8 iy=3.57

Design assumptions

Loading is deemed to act at 1.2 metres above the datum level. Vertical posts are assumed to be attached to the side of the platform or walkway, 97 mm below datum level.

Characteristic loading

Horizontal UDL on top rail wr=1.5 kN/m
Horizontal UDL on infill wi=1.5 kN/m²
Horizontal Point Load on infill Wj=1.5 kN

Design of top rail

Design bending moments:
Due to rail UDL MEdr=gamQ*Wwr*L1/8=0.50955 kNm
Due to infill UDL MEdwi=gamQ*Wwi*L1/8=0.30573 kNm
Due to infill PL at mid-span MEdWj=gamQ*Wj*L1/4=0.75713 kNm
Maximum design bending moment MEdrmax=0.75713 kNm

Actual horiz deflection of rail Drmax=1.3694 mm
Permiss horiz deflection of rail Drmaxp=11.217 mm
Design bending moment (rail) MEdrmax=0.75713 kNm
Design moment resistance McRdr=fy*Wplr*10^3/gamM0=3.8695 kNm

Design of vertical post

Unfactored horizontal load at top of post:
Due to horizontal UDL on rail Wwr=2.019 kN
Due to horizontal UDL on Infill Wwi=1.2114 kN
Due to Point Load on infill Wj=1.5 kN

Design bending moments at base of post:
Due to rail UDL MEdpwr=gamQ*Wwr*(h1+h2)=3.928 kNm
Due to infill UDL Bpwi=gamQ*Wwi*(h1+h2)=2.3568 kNm
Due to infill PL BpWj=gamQ*Wj*(h1+h2)=2.9183 kNm
Max design BM is due to the horizontal UDL on the rail.
Maximum design bending moment MEdpmax=3.928 kNm

Try 100 x 50 x 3.2 RHS - Hot finished (Post)
Actual deflection (post) Dpmax=(Wpmax*(h1+h2)^3/(3*E*Ip))
*1000=6.0278 mm
Permissible deflection (post) Dpmaxp=10.808 mm
Design bending moment (post) MEdpmax=3.928 kNm
Design moment resistance McRdp=fy*Wplp*10^3/gamM0=10.26 kNm

DESIGN SUMMARY

Limiting deflection criterion span/120

POST : 100 x 50 x 3.2 SHS - Hot finished
Minimum 2nd Moment of area of post Ip=116 cm^4

RAIL : 60 x 40 x 3 RHS - Hot finished
Minimum 2nd Moment of area of rail Ir=26.5 cm^4

Location: Ex7 - All 3 loads applied (Stainless steel CHS's)

Design of handrails and balustrades

Stainless Steel handrails & balustrades design using CHS in accordance with BS EN 1993-1-4:2006 and NA to BS EN 1993-1-4:2006 (with amendment A1:2015). The loading is to the National Annex to BS EN 1991-1-1:2002 Table NA.8 - Horizontal loads on partition walls and parapets.

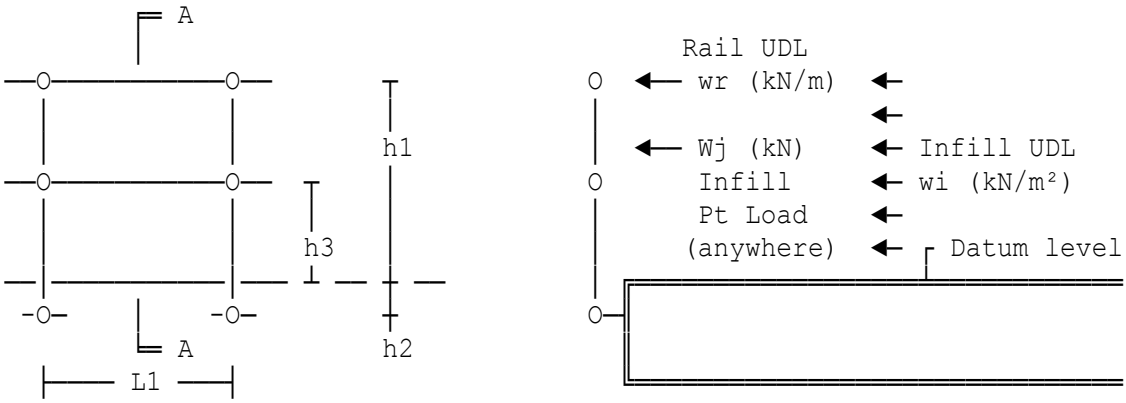

Elevation Section A-A

Horizontal spacing of posts	L1=1.5 m
Distance to top rail from datum	h1=1.1 m
Distance to fixing from datum	h2=0.1 m
42.4 x 3.2 thick CHS	
76.1 x 5 thick CHS	
Young's Modulus	E=200 kN/mm²

Design assumptions

Loading is deemed to act at 1.1 metres above the datum level. Vertical posts are assumed to be attached to the side of the platform or walkway, 100 mm below datum level.

Characteristic loading

Horizontal UDL on top rail	wr=1.5 kN/m
Horizontal UDL on infill	wi=1.5 kN/m²
Horizontal Point Load on infill	Wj=1.5 kN

Design of top rail

Design bending moments:

Due to rail UDL	MEdr=gamQ*Wwr*L1/8=0.63281 kNm
Due to infill UDL	MEdwi=gamQ*Wwi*L1/8=0.34805 kNm
Due to infill PL at mid-span	MEdWj=gamQ*Wj*L1/4=0.84375 kNm
Maximum design bending moment	MEdrmax=0.84375 kNm
Actual horiz deflection of rail	Drmax=6.9205 mm
Permiss horiz deflection of rail	Drmaxp=12.5 mm

Design bending moment (rail) MEdrmax=0.84375 kNm
Design moment resistance McRdr=fy*Wplr*10^3/gamM0=0.98564 kNm

Design of vertical post

Unfactored horizontal load at top of post:
Due to horizontal UDL on rail Wwr=2.25 kN
Due to horizontal UDL on Infill Wwi=1.2375 kN
Due to Point Load on infill Wj=1.5 kN

Design bending moments at base of post:
Due to rail UDL MEdpwr=gamQ*Wwr*(h1+h2)=4.05 kNm
Due to infill UDL Bpwi=gamQ*Wwi*(h1+h2)=2.2275 kNm
Due to infill PL BpWj=gamQ*Wj*(h1+h2)=2.7 kNm
Max design BM is due to the horizontal UDL on the rail.
Maximum design bending moment MEdpmax=4.05 kNm
Actual deflection (post) Dpmax=(Wpmax*(h1+h2)^3/(3*E*Ip))
*1000=9.1368 mm
Permissible deflection (post) Dpmaxp=10 mm
Design bending moment (post) MEdpmax=4.05 kNm
Design moment resistance McRdp=fy*Wplp*10^3/gamM0=5.0636 kNm

DESIGN SUMMARY

Limiting deflection criterion span/120

POST : 76.1 mm Outside Diam CHS Stainless Steel Post
Post Wall thickness 5 mm
Minimum 2nd Moment of area of post Ip=70.922 cm^4
RAIL : 42.4 mm Outside Diameter CHS Stainless Steel Rail
Rail Wall thickness 3.2 mm
Minimum 2nd Moment of area of rail Ir=7.62 cm^4

Location: Ex8 - All 3 loads applied (Stainless steel SHS's)

Design of handrails and balustrades

Stainless Steel handrails & balustrades design using CHS in accordance with BS EN 1993-1-4:2006 and NA to BS EN 1993-1-4:2006 (with amendment A1:2015). The loading is to the National Annex to BS EN 1991-1-1:2002 Table NA.8 - Horizontal loads on partition walls and parapets.

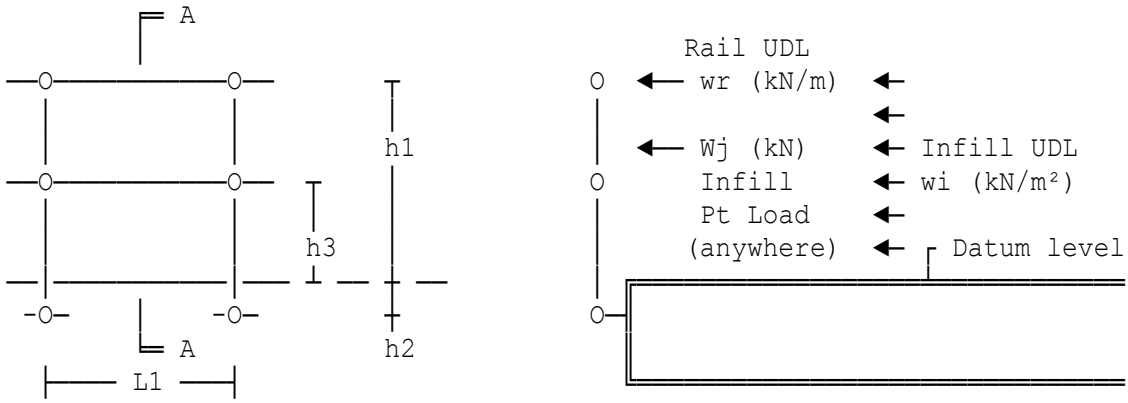

Elevation Section A-A

Horizontal spacing of posts	L1=1.5 m
Distance to top rail from datum	h1=1.1 m
Distance to fixing from datum	h2=0.1 m
40 x 40 x 3 SHS	
80 x 80 x 5 SHS	
Young's Modulus	E=200 kN/mm²

Design assumptions

Loading is deemed to act at 1.1 metres above the datum level. Vertical posts are assumed to be attached to the side of the platform or walkway, 100 mm below datum level.

Characteristic loading

Horizontal UDL on top rail	wr=1.5 kN/m
Horizontal UDL on infill	wi=1.5 kN/m²
Horizontal Point Load on infill	Wj=1.5 kN

Design of top rail

Design bending moments:

Due to rail UDL	MEdr=gamQ*Wwr*L1/8=0.63281 kNm
Due to infill UDL	MEdwi=gamQ*Wwi*L1/8=0.34805 kNm
Due to infill PL at mid-span	MEdWj=gamQ*Wj*L1/4=0.84375 kNm
Maximum design bending moment	MEdrmax=0.84375 kNm
Actual horiz deflection of rail	Drmax=6.0691 mm
Permiss horiz deflection of rail	Drmaxp=12.5 mm

Design bending moment (rail) MEdrmax=0.84375 kNm
Design moment resistance McRdr=fy*Wplr*10^3/gamM0=1.0814 kNm

Design of vertical post

Unfactored horizontal load at top of post:
Due to horizontal UDL on rail Wwr=2.25 kN
Due to horizontal UDL on Infill Wwi=1.2375 kN
Due to Point Load on infill Wj=1.5 kN

Design bending moments at base of post:
Due to rail UDL MEdpwr=gamQ*Wwr*(h1+h2)=4.05 kNm
Due to infill UDL Bpwi=gamQ*Wwi*(h1+h2)=2.2275 kNm
Due to infill PL BpWj=gamQ*Wj*(h1+h2)=2.7 kNm
Max design BM is due to the horizontal UDL on the rail.
Maximum design bending moment MEdpmax=4.05 kNm
Actual deflection (post) Dpmax=(Wpmax*(h1+h2)^3/(3*E*Ip))
*1000=5.209 mm
Permissible deflection (post) Dpmaxp=10 mm
Design bending moment (post) MEdpmax=4.05 kNm
Design moment resistance McRdp=fy*Wplp*10^3/gamM0=7.596 kNm

DESIGN SUMMARY

Limiting deflection criterion span/120

POST : 80 x 80 x 5 SHS Stainless Steel Post
Minimum 2nd Moment of area of post Ip=124.4 cm^4
RAIL : 40 x 40 x 3 SHS Stainless Steel Rail
Minimum 2nd Moment of area of rail Ir=8.689 cm^4

Location: Ex9 - All 3 loads applied (Stainless steel RHS's)

Design of handrails and balustrades

Stainless Steel handrails & balustrades design using CHS in accordance with BS EN 1993-1-4:2006 and NA to BS EN 1993-1-4:2006 (with amendment A1:2015). The loading is to the National Annex to BS EN 1991-1-1:2002 Table NA.8 - Horizontal loads on partition walls and parapets.

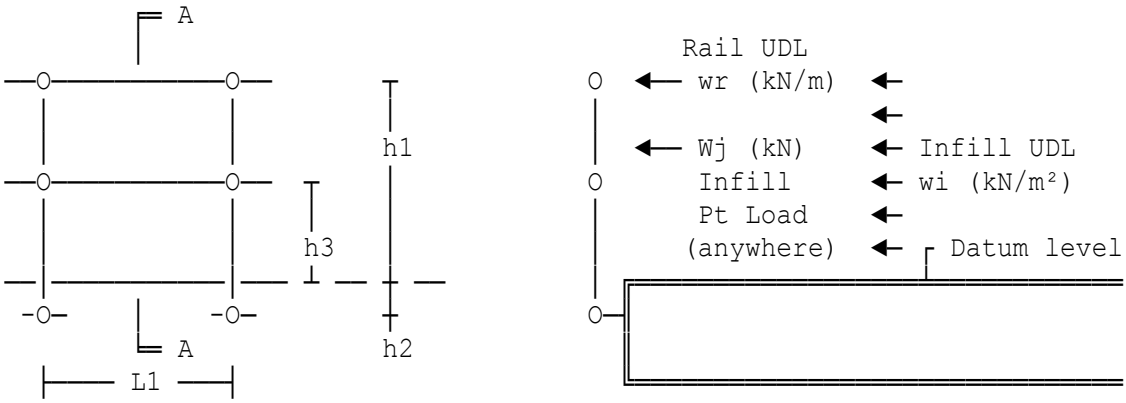

Elevation Section A-A

Horizontal spacing of posts	L1=1.5 m
Distance to top rail from datum	h1=1.1 m
Distance to fixing from datum	h2=0.1 m
60 x 30 x 3 RHS	
100 x 50 x 4 RHS	
Young's Modulus	E=200 kN/mm²

Design assumptions

Loading is deemed to act at 1.1 metres above the datum level. Vertical posts are assumed to be attached to the side of the platform or walkway, 100 mm below datum level.

Characteristic loading

Horizontal UDL on top rail	wr=1.5 kN/m
Horizontal UDL on infill	wi=1.5 kN/m²
Horizontal Point Load on infill	Wj=1.5 kN

Design of top rail

Design bending moments:

Due to rail UDL	MEdr=gamQ*Wwr*L1/8=0.63281 kNm
Due to infill UDL	MEdwi=gamQ*Wwi*L1/8=0.34805 kNm
Due to infill PL at mid-span	MEdWj=gamQ*Wj*L1/4=0.84375 kNm
Maximum design bending moment	MEdrmax=0.84375 kNm
Actual horiz deflection of rail	Drmax=2.7639 mm
Permiss horiz deflection of rail	Drmaxp=12.5 mm

Design bending moment (rail) MEdrmax=0.84375 kNm
Design moment resistance McRdr=fy*Wplr*10^3/gamM0=1.6702 kNm

Design of vertical post

Unfactored horizontal load at top of post:
Due to horizontal UDL on rail Wwr=2.25 kN
Due to horizontal UDL on Infill Wwi=1.2375 kN
Due to Point Load on infill Wj=1.5 kN

Design bending moments at base of post:
Due to rail UDL MEdpwr=gamQ*Wwr*(h1+h2)=4.05 kNm
Due to infill UDL Bpwi=gamQ*Wwi*(h1+h2)=2.2275 kNm
Due to infill PL BpWj=gamQ*Wj*(h1+h2)=2.7 kNm
Max design BM is due to the horizontal UDL on the rail.
Maximum design bending moment MEdpmax=4.05 kNm
Actual deflection (post) Dpmax=(Wpmax*(h1+h2)^3/(3*E*Ip))
*1000=5.0983 mm
Permissible deflection (post) Dpmaxp=10 mm
Design bending moment (post) MEdpmax=4.05 kNm
Design moment resistance McRdp=fy*Wplp*10^3/gamM0=6.542 kNm

DESIGN SUMMARY

Limiting deflection criterion span/120

POST : 100 x 50 x 4 RHS Stainless Steel Post
Minimum 2nd Moment of area of post Ip=127.1 cm^4
RAIL : 60 x 30 x 3 RHS Stainless Steel Rail
Minimum 2nd Moment of area of rail Ir=19.08 cm^4

Location: Ex10 - All 3 loads applied (Stainless steel CHS's & SHS)

Design of handrails and balustrades

Stainless Steel handrails & balustrades design using CHS in accordance with BS EN 1993-1-4:2006 and NA to BS EN 1993-1-4:2006 (with amendment A1:2015). The loading is to the National Annex to BS EN 1991-1-1:2002 Table NA.8 - Horizontal loads on partition walls and parapets.

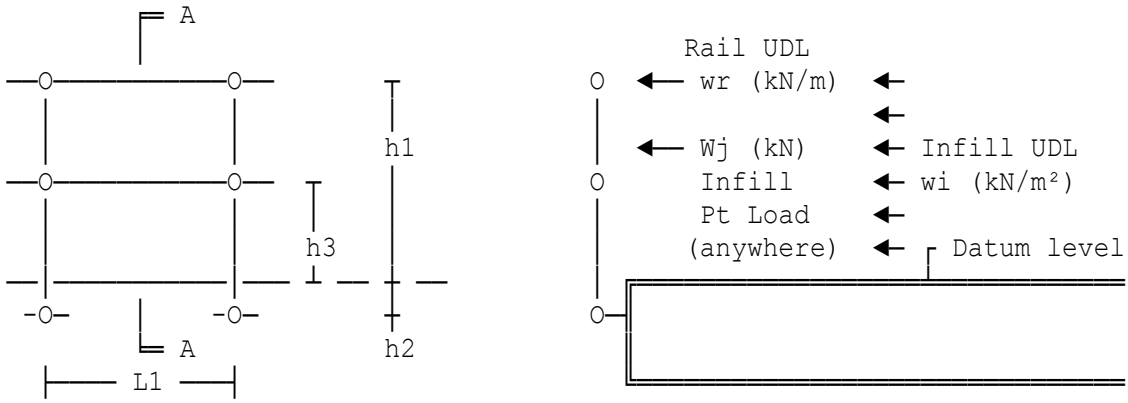

Elevation Section A-A

Horizontal spacing of posts	L1=1 m
Distance to top rail from datum	h1=1.1 m
Distance to fixing from datum	h2=0.1 m
48.3 x 3.2 thick CHS	
80 x 80 x 4 SHS	
Young's Modulus	E=200 kN/mm²

Design assumptions

Loading is deemed to act at 1.1 metres above the datum level. Vertical posts are assumed to be attached to the side of the platform or walkway, 100 mm below datum level.

Characteristic loading

Horizontal UDL on top rail	wr=3 kN/m
Horizontal UDL on infill	wi=1.5 kN/m²
Horizontal Point Load on infill	Wj=1.5 kN

Design of top rail

Design bending moments:

Due to rail UDL	MEdr=gamQ*Wwr*L1/8=0.5625 kNm
Due to infill UDL	MEdwi=gamQ*Wwi*L1/8=0.15469 kNm
Due to infill PL at mid-span	MEdWj=gamQ*Wj*L1/4=0.5625 kNm
Maximum design bending moment	MEdrmax=0.5625 kNm
Actual horiz deflection of rail	Drmax=1.6858 mm
Permiss horiz deflection of rail	Drmaxp=8.3333 mm

Design bending moment (rail) MEdrmax=0.5625 kNm
Design moment resistance McRdr=fy*Wplr*10^3/gamM0=1.304 kNm

Design of vertical post

Unfactored horizontal load at top of post:
Due to horizontal UDL on rail Wwr=3 kN
Due to horizontal UDL on Infill Wwi=0.825 kN
Due to Point Load on infill Wj=1.5 kN

Design bending moments at base of post:
Due to rail UDL MEdpwr=gamQ*Wwr*(h1+h2)=5.4 kNm
Due to infill UDL Bpwi=gamQ*Wwi*(h1+h2)=1.485 kNm
Due to infill PL BpWj=gamQ*Wj*(h1+h2)=2.7 kNm
Max design BM is due to the horizontal UDL on the rail.
Maximum design bending moment MEdpmax=5.4 kNm
Actual deflection (post) Dpmax=(Wpmax*(h1+h2)^3/(3*E*Ip))
*1000=8.1127 mm
Permissible deflection (post) Dpmaxp=10 mm
Design bending moment (post) MEdpmax=5.4 kNm
Design moment resistance McRdp=fy*Wplp*10^3/gamM0=6.39 kNm

DESIGN SUMMARY

Limiting deflection criterion span/120

POST : 80 x 80 x 4 SHS Stainless Steel Post
Minimum 2nd Moment of area of post Ip=106.5 cm^4
RAIL : 48.3 mm Outside Diameter CHS Stainless Steel Rail
Rail Wall thickness 3.2 mm
Minimum 2nd Moment of area of rail Ir=11.586 cm^4

Location: Ex11 - All 3 loads applied (Stainless steel CHS's & SHS)

Design of handrails and balustrades

Stainless Steel handrails & balustrades design using CHS in accordance with BS EN 1993-1-4:2006 and NA to BS EN 1993-1-4:2006 (with amendment A1:2015). The loading is to the National Annex to BS EN 1991-1-1:2002 Table NA.8 - Horizontal loads on partition walls and parapets.

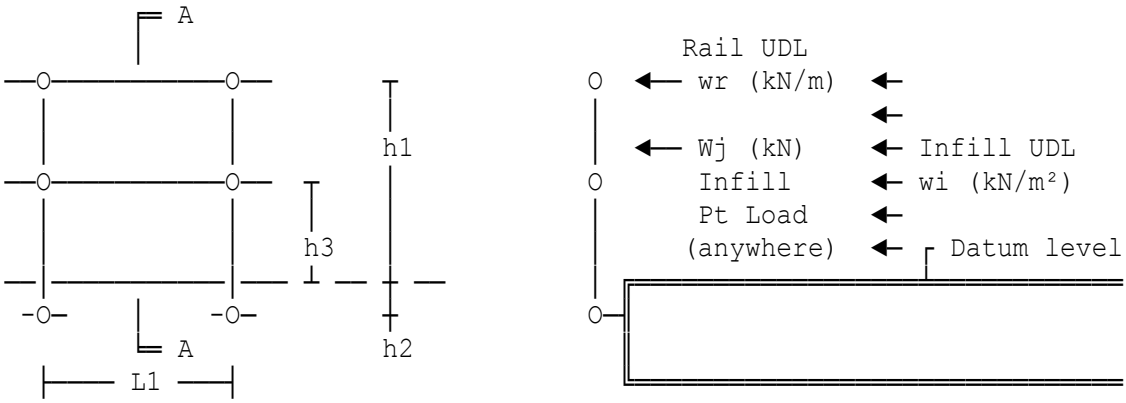

Elevation Section A-A

Horizontal spacing of posts	L1=1.5 m
Distance to top rail from datum	h1=1.1 m
Distance to fixing from datum	h2=0.1 m
42.4 x 3.2 thick CHS	
80 x 80 x 4 SHS	
Young's Modulus	E=200 kN/mm²

Design assumptions

Loading is deemed to act at 1.1 metres above the datum level. Vertical posts are assumed to be attached to the side of the platform or walkway, 100 mm below datum level.

Characteristic loading

Horizontal UDL on top rail	wr=1.5 kN/m
Horizontal UDL on infill	wi=1.5 kN/m²
Horizontal Point Load on infill	Wj=1.5 kN

Design of top rail

Design bending moments:

Due to rail UDL	MEdr=gamQ*Wwr*L1/8=0.63281 kNm
Due to infill UDL	MEdwi=gamQ*Wwi*L1/8=0.34805 kNm
Due to infill PL at mid-span	MEdWj=gamQ*Wj*L1/4=0.84375 kNm
Maximum design bending moment	MEdrmax=0.84375 kNm
Actual horiz deflection of rail	Drmax=6.9205 mm
Permiss horiz deflection of rail	Drmaxp=12.5 mm

Design bending moment (rail) MEdrmax=0.84375 kNm
Design moment resistance McRdr=fy*Wplr*10^3/gamM0=0.98564 kNm

Design of vertical post

Unfactored horizontal load at top of post:
Due to horizontal UDL on rail Wwr=2.25 kN
Due to horizontal UDL on Infill Wwi=1.2375 kN
Due to Point Load on infill Wj=1.5 kN

Design bending moments at base of post:
Due to rail UDL MEdpwr=gamQ*Wwr*(h1+h2)=4.05 kNm
Due to infill UDL Bpwi=gamQ*Wwi*(h1+h2)=2.2275 kNm
Due to infill PL BpWj=gamQ*Wj*(h1+h2)=2.7 kNm
Max design BM is due to the horizontal UDL on the rail.
Maximum design bending moment MEdpmax=4.05 kNm
Actual deflection (post) Dpmax=(Wpmax*(h1+h2)^3/(3*E*Ip))
*1000=6.0845 mm
Permissible deflection (post) Dpmaxp=10 mm
Design bending moment (post) MEdpmax=4.05 kNm
Design moment resistance McRdp=fy*Wplp*10^3/gamM0=6.39 kNm

DESIGN SUMMARY

Limiting deflection criterion span/120

POST : 80 x 80 x 4 SHS Stainless Steel Post
Minimum 2nd Moment of area of post Ip=106.5 cm^4
RAIL : 42.4 mm Outside Diameter CHS Stainless Steel Rail
Rail Wall thickness 3.2 mm
Minimum 2nd Moment of area of rail Ir=7.62 cm^4